FULTON COUNTY

November 3, 2016

Re: #16ITB091416K-JD Chattahoochee III Pump Station Upgrades

Dear Bidders:

Attached is one (1) copy of Addendum Number 3, hereby made a part of the above-referenced Invitation to Bid (ITB).

Except as provided herein, all terms and conditions in the ITB referenced above remain unchanged and in full force and effect.

Sincerely,

Joyce Daniel

Joyce Daniel, CPPB
Assistant Purchasing Agent

This Addendum forms a part of the contract documents and **modifies** the original documents as noted below:

The due date for this project is changed to Monday, November 21, 2016 at 11:00 A.M.

REVISION: The electrical plans for this project are attached. See ATTACHMENT 1.

ACKNOWLEDGEMENT OF ADDENDUM NO.3, #16ITB091416K-JD – Chattahoochee III Pump Station Upgrades.

The undersigned Proposer acknowledges receipt of this Addendum by returning one (1) copy of this form with the proposal submittal package to the Department of Purchasing & Contract Compliance, Fulton County Public Safety Building, 130 Peachtree Street, S.W., Suite 1168, Atlanta, Georgia 30303 by the ITB due date and time Monday, November 21, 2016 at 11:00 A.M.

This is to acknowledge receipt of Addendum No. 3, _____ day of _____, 2016.

_____
Legal Name of Bidder

_____
Signature of Authorized Representative

_____
Title

ATTACHMENT 1

ELECTRICAL PLANS

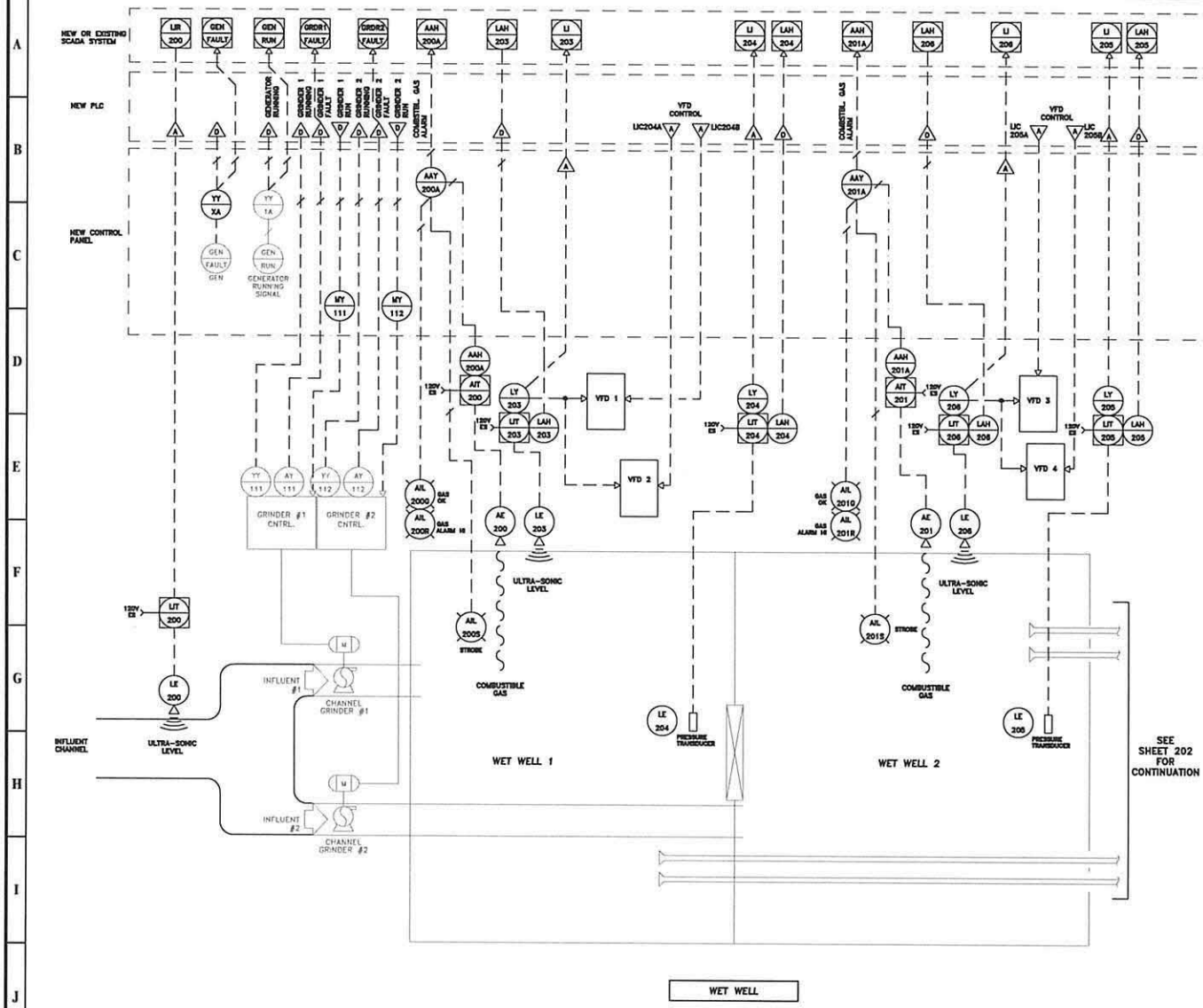

NOTES:

1. IF PLC FAILS PRESSURE TRANSDUCER OR ULTRASONIC AS SELECTED FROM VFD GOES DIRECTLY TO VFD'S TO RUN VFD'S AT 100% SPEED.
2. PROGRAM THE PLC TO HAVE 2 WET WELLS SO THE OWNER WILL BE ABLE TO SELECT ONE OR THE OTHER WET WELL.
3. PRESSURE TRANSDUCER SHALL BE USED FOR PRIMARY LEVEL CONTROL AND ULTRASONIC AS BACKUP LEVEL CONTROL.
4. PROVIDE TWO NEW MISSION CONTROL SYSTEMS, ONE WITH DIGITAL EXPANDER AND ONE WITH ANALOG EXPANDER.
5. EACH MISSION PANEL SHALL BE PROVIDED WITH 2 TOGGLE SWITCHES, ONE FOR REBOOT POWER AND THE OTHER FOR BATTERY.
6. THERE IS AN EXISTING MISSION SYSTEM PANEL. CONTRACTOR SHALL FIELD VERIFY WHICH EXISTING INPUTS/OUTPUTS ARE GOING TO THIS PANEL AND CONTINUE TO USE THESE NEW I/O'S TO THE SAME PANEL.
7. PROVIDE TERMINAL JUNCTION BOXES ABOVE WET WELL TO CONNECT VENDOR CABLE FROM THE PRESSURE TRANSMITTERS. CONTINUE VENDOR CABLE IN 2" CONDUIT TO THE TRANSMITTERS LOCATED INSIDE THE PUMP BUILDING WALL. PROVIDE 3/4" CONDUIT AND 2 #12, 1 #12G CABLE BETWEEN TRANSMITTERS AND LIGHTING PANEL. RUN 1"C AND 1 PAIR #16 AWG TWISTED SHIELDED CABLE BETWEEN PRESSURE TRANSMITTERS AND PLC.
8. ULTRASONIC LEVEL TRANSMITTER SHALL BE LOCATED INSIDE THE PUMP BUILDING WALL. RUN VENDOR CABLE IN 2"C BETWEEN ULTRASONIC LEVEL PROBE AND TRANSMITTER. RUN 3/4" CONDUIT AND 2 #12, 1 #12G CABLE BETWEEN TRANSMITTER AND LIGHTING PANEL. RUN 1"C AND 1 PAIR #16 AWG TWISTED SHIELDED CABLE BETWEEN ULTRASONIC TRANSMITTER AND PLC.

HS 204 EXISTING
MOL 102 FUTURE
MOL 102 NEW

GRAVP
Ray Group Consulting Engineers, Inc.
1827 Powers Ferry Road
Building 80, Suite 100
Atlanta, Georgia 30339
Tel. (770) 953-1443

PRIME ENGINEERING INCORPORATED
8715 NORTHSIDE PARKWAY NW
SUNNORTH CREEK, SUITE 200
ATLANTA, GEORGIA 30327
404-825-7100

PROJECT: CHATTAHOOCHEE III PUMP STATION
JOHNS CREEK, GEORGIA
PREPARED FOR: FULTON COUNTY DEPARTMENT OF PUBLIC WORKS

REVISIONS

No.	DATE	DESCRIPTION
A	04-30-13	30% SUBMITTAL
B	9/6/2013	90% DESIGN SUBMITTAL
C	12-06-13	95% DESIGN SUBMITTAL
D	01-17-14	FOR DESIGN SUBMITTAL
0	02-18-15	CONSTRUCTION DOCUMENTS

SEAL: GEORGIA REGISTERED PROFESSIONAL ENGINEER NO. 13677 JASON E. ORR
DATE: 02-18-15

© 2013 PRIME ENGINEERING, INC. Scales, as noted hereon, are valid on the original drawing; the dimensions of which are 22 by 34 inches. These scales, and the dimensions, are not valid if the ratio of the overall sheet dimensions is not the same as the original drawing. The information contained on this drawing is the property of PRIME ENGINEERING, INC. Unauthorized use of this drawing is prohibited and it may not be reproduced or copied in whole or in part. It is only to be used for the project and site specifically identified herein and for the purpose for which it was prepared. It is to be returned upon request.

DRAWING TITLE: PROCESS AND INSTRUMENTATION DIAGRAM

DRAWN BY	LRD
DESIGNED BY	AKR
CHECKED BY	AKR
DRAWING DATE	04-30-13
DRAWING SCALE	AS SHOWN
PROJECT NUMBER	2015-0028
DRAWING NUMBER	I-201

ISSUED FOR CONSTRUCTION

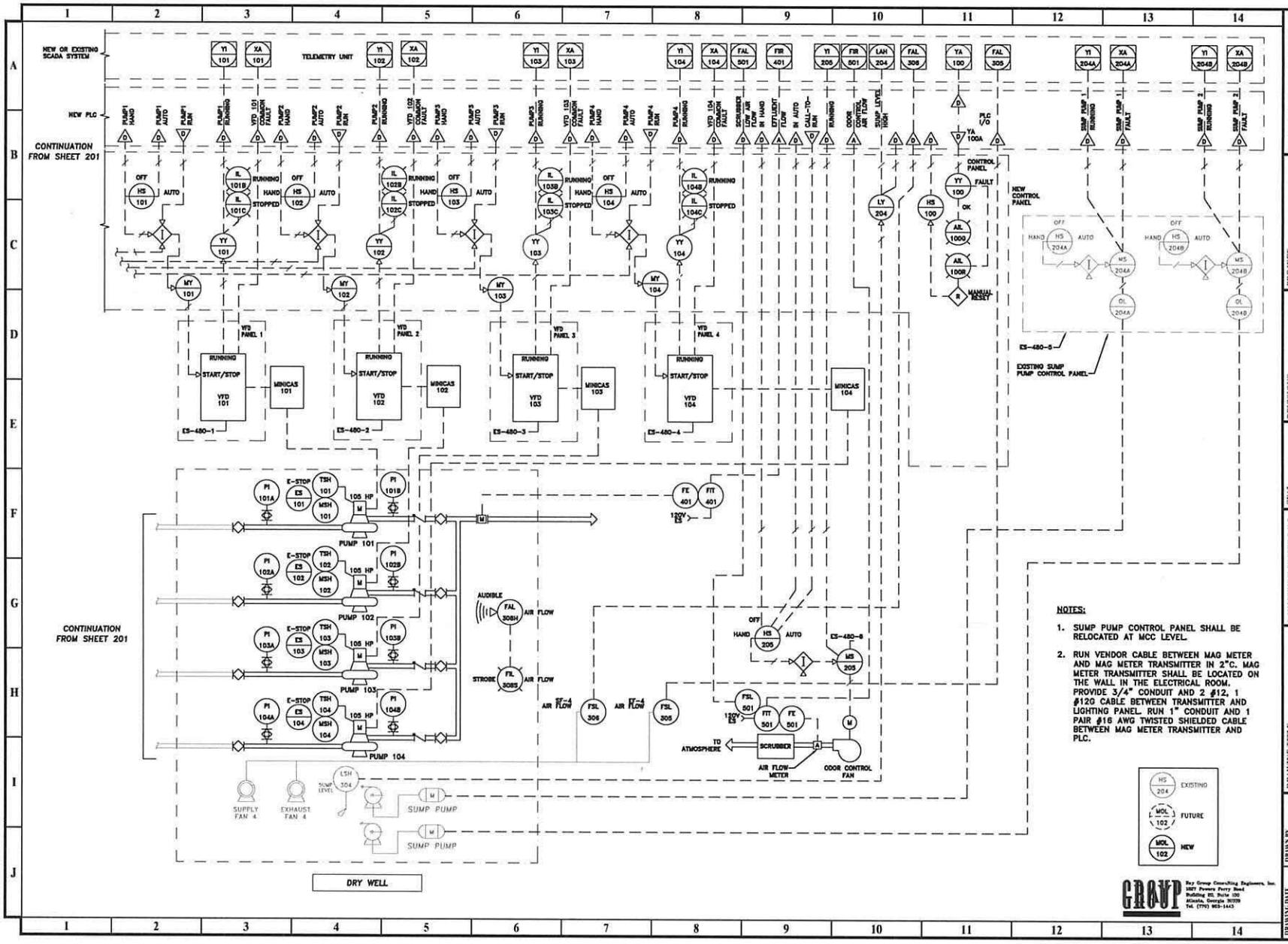

NOTES:

1. SUMP PUMP CONTROL PANEL SHALL BE RELOCATED AT MCC LEVEL.
2. RUN VENDOR CABLE BETWEEN MAG METER AND MAG METER TRANSMITTER IN 2"C. MAG METER TRANSMITTER SHALL BE LOCATED ON THE WALL IN THE ELECTRICAL ROOM. PROVIDE 3/4" CONDUIT AND 2 #12, 1 #12G CABLE BETWEEN TRANSMITTER AND LIGHTING PANEL. RUN 1" CONDUIT AND 1 PAIR #16 AWG TWISTED SHIELDED CABLE BETWEEN MAG METER TRANSMITTER AND PLC.

GROUP
Ray Group Consulting Engineers, Inc.
1027 Powers Ferry Road
Building III, Suite 200
Atlanta, Georgia 30339
Tel. (770) 953-1443

PRIME ENGINEERING INCORPORATED
EIGHT INSIDE PARKWAY NW
NW NORTH CREEK, SUITE 300
ATLANTA, GEORGIA 30327
404-252-7100

PROJECT: CHATTAHOOCHEE III PUMP STATION
JOHNS CREEK, GEORGIA
PREPARED FOR: FULTON COUNTY DEPARTMENT OF PUBLIC WORKS

REVISIONS		
NO.	DATE	DESCRIPTION
A	04-30-13	90% DESIGN SUBMITTAL
B	09-06-13	95% DESIGN SUBMITTAL
C	12-06-13	95% DESIGN SUBMITTAL
D	01-17-14	95% DESIGN SUBMITTAL
0	02-28-15	CONSTRUCTION DOCUMENTS

SEAL: GEORGIA REGISTERED PROFESSIONAL ENGINEER NO. 13077 BRIAN L. ROY 11-18-15

DATE:

© 2013 PRIME ENGINEERING, INC. Scales, as stated hereon, are valid on the original drawing; the dimensions of which are 22 by 34 inches. These scales, and the dimensions, may be used to the ratio of the overall sheet dimensions of the print to corresponding dimensions of the original drawing. This drawing is the property of PRIME ENGINEERING, INC. It is only to be used for the project and site specifically identified herein and is not to be used on any other project. It is to be returned upon request.

DRAWING TITLE: CONTROL PANEL

DRAWN BY: LRD	DESIGNED BY: AKR	CHECKED BY: AKR	
DRAWING DATE: 04-30-13	DRAWING SCALE: AS SHOWN	PROJECT NUMBER: 2015-0025	DRAWING NUMBER: I-202

I-SUBMITTED FOR CONSTRUCTION

ELECTRICAL & INSTRUMENTATION LEGEND

GENERAL LINEWORK SYMBOLS

- NEW FACILITIES
- EXISTING FACILITIES TO REMAIN
- EXISTING FACILITIES TO BE REMOVED
- EQUIPMENT OR PACKAGE BOUNDARY

CIRCUIT AND RACEWAY SYMBOLS

- P 1357 — RACEWAY IDENTIFIER--SEE RACEWAY SCHEDULE, REF. 1
- RACEWAY OR WIRING SYSTEM ABOVE FLOOR LEVEL BELOW CEILING, EXPOSED UON.
- RACEWAY OR WIRING SYSTEM ABOVE FLOOR LEVEL CONCEALED IN WALL OR ABOVE CEILING UON.
- RACEWAY OR WIRING SYSTEM IN OR UNDER FLOOR, OR CONCEALED IN OR BEHIND STRUCTURE OR EQUIPMENT
- RACEWAY OR WIRING SYSTEM TURNED TOWARD THE VIEWER (UP ON PLAN DRAWINGS)
- RACEWAY OR WIRING SYSTEM TURNED AWAY FROM THE VIEWER (DOWN ON PLAN DRAWINGS)
- RACEWAY OR WIRING SYSTEM CHANGE IN ELEVATION OR DISTANCE FROM VIEWER
- CONDUIT STUB AND CAP
- DUCT BANK, REINFORCED CONCRETE UON.
- DB 123 — DUCT BANK IDENTIFIER--SEE DUCT BANK SCHEDULE, REF. 6 EXAMPLE: DUCT BANK 123
- HH — MANHOLE (MH) OR HANDHOLE (HH)
- JB2700A — JUNCTION BOX WITH OPTIONAL IDENTIFIER.
- PB PB1035 — PULL BOX WITH OPTIONAL IDENTIFIER
- HOME RUN - SEE PANELBOARD SCHEDULE FOR CIRCUIT INFORMATION
- PBD A-1,3,5 — EXAMPLE: HOME TO PANELBOARD PBD A, CIRCUITS 1, 3, AND 5
- LIGHTING, RECEPTACLE, AND MISCELLANEOUS BRANCH CIRCUITING NOT SPECIFIED IN RACEWAY SCHEDULE: RUNS WITHOUT HATCH LINES SHALL CONTAIN TWO WIRES OF MINIMUM SIZE REQUIRED BY THE SPECS FOR THAT SYSTEM UNLESS OTHERWISE NOTED. OTHER CONDUCTOR QUANTITY SPECIFIED WITH HATCH LINES:
  - NEUTRAL CONDUCTOR, IF USED--HALF STROKE PHASE CONDUCTORS, AS APPLICABLE--FULL STROKE
  - EQUIPMENT GROUNDING CONDUCTOR ALWAYS REQUIRED. FOR MINIMUM SIZE PERMITTED REFER TO NEC TABLE 250-95.
  - CONDUIT FILL PER NEC OR MINIMUM SIZE OF 3/4 INCH EXPOSED, 1 INCH ALL OTHER INSTALLATIONS, EXCEPT FLEX - 3/4 INCH.

GROUNDING SYMBOLS

- GROUND ROD, 3/4" x 10'-0", COPPERCLAD (UNLESS OTHERWISE NOTED)
- GROUND ROD AND WELL
- GROUND CONNECTION, BOLTED TYPE
- GROUND CONNECTION, COMPRESSION TYPE
- —G—G— GROUNDING CONDUCTOR

LIGHTING SYMBOLS

NOTE: LIGHTING FIXTURE SHAPES AND SCALE ARE REPRESENTED WHERE POSSIBLE. THE EXAMPLES SHOWN BELOW ARE TYPICAL APPLICATIONS.

- 16'-6" — CEILING HEIGHT
- 101 — ROOM NUMBER(ARCH DWGS)
- PUMP ROOM — OPTIONAL ROOM TITLE
- "OC" — FIXTURE TYPE IDENTIFIER. TYPE APPLIES TO ALL FIXTURES OF THE SAME SHAPE WITHIN A ROOM OR AN AREA UNLESS OTHERWISE NOTED. REFER TO E-207

FLUORESCENT FIXTURES:

- RECESSED IN CEILING. J-BOX, FLEX, AND CONNECTION SHOWN.
- FLOODLIGHT (AIMED AS INDICATED)
- FLUORESCENT STRIPLIGHT. J-BOX SHOWN.
- NL — FIXTURE ON UNSWITCHED CIRCUIT (NIGHT LIGHT etc.) "NL" = NON-SWITCHED CIRCUIT
- FLUORECCENT WALL MOUNT

INCANDESCENT/HID FIXTURES:

- RECESSED OR SURFACE
- POLE OR STANCHION MOUNTED
- WALL MOUNTED
- DIRECTIONAL LIGHT
- 14 — POLE-MOUNTED AREA LIGHT. ONE POLE AND TWO FIXTURES SHOWN. OPTIONAL POLE NUMBER SHOWN. EXAMPLE: POLE NUMBER 14.
- EMERGENCY LIGHTING UNIT, SELF-CONTAINED

EXIT LIGHTS. DARK QUADRANTS INDICATE FACES ILLUMINATED:

- SURFACE ON CEILING
- WALL MOUNTED, AT +8'0 UON
- WITH DIRECTIONAL ARROWS

LIGHTING CONTROL:

- 3a — LTG CIRCUIT IDENTIFIER: WHEN SHOWN ADJACENT TO FIXTURE IDENTIFIES CIRCUIT NUMBER AND SWITCH. eg. CIRCUIT 3, CONTROLLED BY SWITCH a. "n" = NON-SWITCHED CIRCUIT

DISTRIBUTION EQUIPMENT SYMBOLS

GENERAL: APPROXIMATE SHAPE AND SCALE REPRESENTED WHERE POSSIBLE, HOWEVER EXACT SIZE AND NUMBER OF SECTIONS IS ESTIMATED

- FLOOR-STANDING DISTRIBUTION ASSEMBLY, SUCH AS A SWITCHBOARD, TRANSFORMER, OR MOTOR CONTROL CENTER
- MCC1100 — EQUIPMENT NUMBER (EXAMPLE)
- WALL-MOUNTED DISTRIBUTION ASSEMBLY, SUCH AS PANELBOARD, MOTOR STARTER PANEL, OR TERMINAL CABINET
- PBD1200 — EQUIPMENT NUMBER (EXAMPLE)

WIRING DEVICE SYMBOLS

GENERAL: UNLESS OTHERWISE NOTED, ALL SWITCHES ARE WALL MOUNTED AT 4'-0"

- $ — SINGLE POLE SWITCH. 20 AMP UNLESS OTHERWISE NOTED.
- $ $ — GANGED SWITCHES--IN COMMON BOX, WITH COMMON WALL PLATE
- SWITCH SUPERSCRIPT MODIFIER. LOWER CASE LETTER. INDICATES CIRCUIT CONTROLLED--a,b,c,etc. MAY BE COMBINED WITH CIRCUIT NUMBER. EXAMPLE: 1a, 4b, etc.
- SWITCH SUBSCRIPT MODIFIER. UPPER CASE LETTER OR NUMBER:
  - 2 = DOUBLE POLE
  - 3 = THREE WAY
  - 4 = FOUR WAY
  - K = KEY OPERATED
  - MC = MOMENTARY CONTACT, THREE POSITION
  - MS = MANUAL (MOTOR) STARTER OR SWITCH
  - R = RHEOSTAT (DIMMER, SPEED CONTROL)

GENERAL: UNLESS OTHERWISE NOTED, ALL RECEPTACLES ARE 125 VOLT, SINGLE PHASE, STRAIGHT BLADE, NON-LOCKING, GROUNDING STYLE, MOUNTED AT +1'-6".

- DUPLEX RECEPTACLE, 2 POLE, 3 WIRE
  - RECEPTACLE MODIFIERS:
  - F = FLOOR MOUNTED
  - H = HAZARDOUS AREA, EXPLOSION PROOF
  - WP = OUTDOOR, WEATHER PROOF
- SPECIAL OUTLET OR JACK FOR DO PROBE
- RECESSED FLOOR RECEPTACLE--ANY RECEPTACLE INSIDE A SQUARE. eg DUPLEX
- SURFACE FLOOR RECEPTACLE--ANY RECEPTACLE INSIDE A TRIANGE. eg DUPLEX
- GANGED RECEPTACLES--IN COMMON BOX, WITH COMMON WALL PLATE. eg DUPLEX
- WELDING RECEPTACLE, 60A, 600V AC, 4 WIRE

MOTOR AND EQUIPMENT SYMBOLS

- MOTOR CONNECTION: X DESIGNATED HP
- MOTOR STARTER, INDIVIDUAL--NOT LOCATED IN AN MCC OR SIMILAR GROUP ASSEMBLY
- COMBINATION MOTOR STARTER--NOT LOCATED IN AN MCC OR SIMILAR GROUP ASSEMBLY
- DISCONNECT, NON-FUSED. PROVISION FOR CLASS R FUSES. UNLESS OTHERWISE NOTED, DISCONNECT SWITCHES ARE HEAVY DUTY, SINGLE THROW, WITH NEMA 4X ENCLOSURE. MOUNT AT 4'-8" TO CENTER UON.
- FIELD INSTRUMENT CONNECTION
- HAND STATION. CONFIGURATION ACCORDING TO CONTROL DIAGRAMS.

TELEPHONE SYSTEM SYMBOLS

GENERAL: UNLESS OTHERWISE NOTED, TELEPHONE OUTLETS ARE MOUNTED AT +1'-2", MATCHING RECEPTACLE HEIGHT.

- EXTERNAL LINE OR PLANT PHONE SYSTEM OUTLET
  - MODIFIERS:
  - A = ATTENDANT'S CONSOLE
  - F = FUTURE INSTRUMENT
  - J = JACK, PLUG-IN TYPE
  - W = WALL INSTRUMENT. +5'-0"
- —T— CONDUIT, SIZED AS NOTED
  - MODIFIERS:
  - T = TELEPHONE

GENERAL ABBREVIATIONS

AR	ALARM RELAY
AS	AMMETER SELECTOR SWITCH
A, AMP	AMP(S), AMPERE(S)
AC	ALTERNATING CURRENT
AFF	ABOVE FINISHED FLOOR
AHAP	AS HIGH AS POSSIBLE
AIC	AMPS INTERRUPTING CAPACITY, SYMM.
AL	ALUMINUM
AT	AMPERE TRIP
AF	AMPERE FRAME
AUTO	AUTOMATIC
AUX	AUXILIARY
AWG	AMERICAN WIRE GAUGE
BC	BARE COPPER CONDUCTOR
BKR	BREAKER
C	CONDUCTOR/CONTACTOR
CAP	CAPACITOR
CB	CIRCUIT BREAKER
CKT	CIRCUIT
CLG	CEILING
CR	CONTROL RELAY
CND	CONDUIT
CONC	CONCRETE
CONT	CONTROL
CPT	CONTROL POWER TRANSFORMER
CT	CURRENT TRANSFORMER
CU	COPPER
D	DIAMETER
DB	DUCT BANK
DC	DIRECT CURRENT
DET	DETAIL
DIAG	DIAGRAM
DS	DISCONNECT SWITCH
DWG	DRAWING
EA	EACH
EL	ELEVATION
ELEC	ELECTRIC(AL)
EMER	EMERGENCY
ENCL	ENCLOSURE/ENCLOSED
EP	EXPLOSIONPROOF
EQPT	EQUIPMENT
EX	EXISTING
FDR	FEEDER
FLA	FULL LOAD AMPS
FR	FORWARD/REVERSE
FS	FLOW SWITCH
FU	FUSE
FUT	FUTURE
FVNR	FULL VOLTAGE NON-REVERSING
FVR	FULL VOLTAGE REVERSING
GALV	GALVANIZED
GEN	GENERATOR
GFI	GROUND FAULT INTERRUPTER
GRD	GROUND
GRS	GALVANIZED RIGID STEEL
H	HIGH
HGT	HEIGHT
HH	HANDHOLE
HID	HIGH INTENSITY DISCHARGE
HP	HORSEPOWER
HS	HAND SWITCH
HVAC	HEATING, VENTILATION, AND AIR CONDITIONING
HZ	HERTZ (CYCLES PER SECOND)
HOA	HAND/OFF/AUTO
HMH	HIGH VOLTAGE MANHOLE
ICOM	INTERCOM HANDSET
ID	INSIDE DIAMETER
IMC	INDIVIDUAL MOTOR CONTROLLER
INTLK	INTERLOCK
INST	INSTANTANEOUS
INSTR	INSTRUMENT
I/O	INPUT-OUTPUT
JB	JUNCTION BOX
KV	KILOVOLT
KVA	KILOVOLT-AMPERE
KVAR	KILOVOLT-AMPERE REACTIVE
KW	KILOWATT
KWH	KILOWATT-HOUR
L-O-R	LOCAL-OFF-REMOTE
L	LONG
LC	LIGHTING CONTACTOR
LCS	LOCAL CONTROL STATION
LP	LEGEND PLATE
LOS	LOCK-OUT STOP
LSL	LEVEL SWITCH LOW
LTG	LIGHTING
LV	LOW VOLTAGE
LSH	LEVEL SWITCH HIGH
M	MOTOR CONTACTOR
mA	MILLIAMPERE
MAX	MAXIMUM
MCC	MOTOR CONTROL CENTER
MCP	MOTOR CONTROL PANEL/MOTOR CIRCUIT PROTECTOR
MECH	MECHANICAL
MFR	MANUFACTURE(R)
MH	MANHOLE
MIC	MICROPHONE
MIN	MINIMUM
MISC	MISCELLANEOUS
mM	MILLIMETER
mV	MILLIVOLT
MCM	MILLI CIRCULAR MILLS
MPR	MOTOR PROTECTION RELAY
MTR	MOTOR
N/A	NOT APPLICABLE
NC	NORMALLY CLOSED
NEUT,N	NEUTRAL
NIC	NOT IN CONTRACT
NO.	NUMBER
NOM	NOMINAL
NP	NAMEPLATE
NTS	NOT TO SCALE
OC	ON CENTER
OD	OUTSIDE DIAMETER
OH	OVERHEAD
OL'S	OVERLOADS
OT	OILTIGHT
P	POLE
PA	PUBLIC ADDRESS
PB	PUSHBUTTON, PULLBOX
PF	POWER FACTOR
PH	PHASE
PLC	PROGRAMMABLE LOGIC CONTROLLER
PNL	PANEL
PP	POWER PANEL
PR	PAIR
PRI	PRIMARY
PT	POTENTIAL TRANSFORMER
PVC	POLYVINYL CHLORIDE
PWR	POWER
RCPT	RECEPTACLE
REF	REFERENCE
REQD	REQUIRED
RMS	ROOT MEAN SQUARE
RTD	RESISTANCE TEMPERATURE DETECTOR
SCH	SCHEDULE
SEC	SECONDARY
SEL	SELECTOR
SPDT	SINGLE POLE DOUBLE THROW
SPEC	SPECIFICATION
SPKR	SPEAKER
SS	SPEED SWITCH
SUB	SUBSTATION
SW	SWITCH
SYMM	SYMMETRICAL
SYS	SYSTEM
SV	SOLENOID OPREATED VALVE
SPB	SIGNAL PULL BOX
TB	TERMINAL BOX
TEL	TELEPHONE
TEMP	TEMPERATURE
TFR	TRANSFORMER
TH	THERMOSTAT
TSH	TEMPERATURE SWITCH HIGH
TV	TELEVISION
TYP	TYPICAL
TR	TIMING RELAY
U/E	UNDERGROUND ELECTRIC
U/G	UNDERGROUND
U/T	UNDERGROUND TELEPHONE
UON	UNLESS OTHERWISE NOTED
V	VOLT
VA	VOLTAMPERE
VAR	VOLTAMPERE REACTIVE
VFD	VARIABLE FREQUENCY DRIVE
VS	VOLTMETER SELECTOR SWITCH
W	WATT, WIRE, WIDE
W/	WITH
W/O	WITHOUT
WP	WEATHERPROOF
WSH	OVERLOAD TORQUE SWITCH
WSHH	SHEAR PIN LIMIT SWITCH
XS	MISCELLANEOUS (VIBRATION, ETC.) SWITCH
ZS	POSITION (LIMIT) SWITCH

KEY ENGINEERING GROUP INC.
3539-B WESLEY CHAPEL RD.
DECATUR GA 30034
TEL: (770) 987-7111; FAX: (770) 987-3371

PRIME ENGINEERING INCORPORATED
3715 NORTHSIDE PARKWAY NW
300 NORTHCREEK, SUITE 200
ATLANTA, GEORGIA 30327
404-425-7100

PROJECT: CHATTAHOOCHEE III PUMP STATION
JOHNS CREEK, GEORGIA
PREPARED FOR: FULTON COUNTY DEPARTMENT OF PUBLIC WORKS

REVISIONS

NO.	DATE	DESCRIPTION
A	04-30-13	30% SUBMITTAL
B	09-06-13	60% SUBMITTAL
C	12-06-13	90% SUBMITTAL
D	01-17-14	100% SUBMITTAL
0	11-21-14	CONSTRUCTION DOCUMENTS

SEAL: GEORGIA REGISTERED PROFESSIONAL ENGINEER No. 025220 EMMANUEL K. HUH
DATE:

© 2013 PRIME ENGINEERING, INC. Scales, as stated hereon, are valid on the original drawing; the dimensions of which are 22 by 34 inches. These scales, noted hereon, are hereby changed by the ratio of the overall sheet dimensions of the print to corresponding dimensions of the original drawing. This drawing is the property of PRIME ENGINEERING, INCORPORATED and is not to be reproduced or copied in whole or in part. It is only to be used for the project and site specifically identified herein and is not to be used on any other project. It is to be returned upon request.

DRAWING TITLE: ELECTRICAL & INSTRUMENTATION LEGEND

DRAWING DATE: 04-30-13	DRAWN BY: KEY
DRAWING SCALE: AS SHOWN	DESIGNED BY: KEY
PROJECT NUMBER: 2015-0028	CHECKED BY: RRM

DRAWING NUMBER: E-001

NOT ISSUED FOR CONSTRUCTION

C:\Users\Jason\Desktop\Chattahoochee Pump Station (11-19-14 evening)\E-001-2015-0028.dwg Sun, 11/23/14 7:50 PM

NOTES:

1. ALL ELECTRICAL DEVICES SHOWN TO BE DEMOLISHED OR REMOVED SHALL BE DISCONNECTED BACK TO THE APPROPRIATE POWER SOURCE.
2. THE OWNER SHALL HAVE THE RIGHT OF FIRST REFUSAL OF ALL DEMOLISHED AND/OR REMOVED EQUIPMENT.
3. ANY EQUIPMENT NOT ACCEPTED BY THE OWNER SHALL BE DISPOSED OF PROPERLY IN ACCORDANCE WITH ALL APPLICABLE STATE, FEDERAL, AND LOCAL CODES AND REGULATIONS.

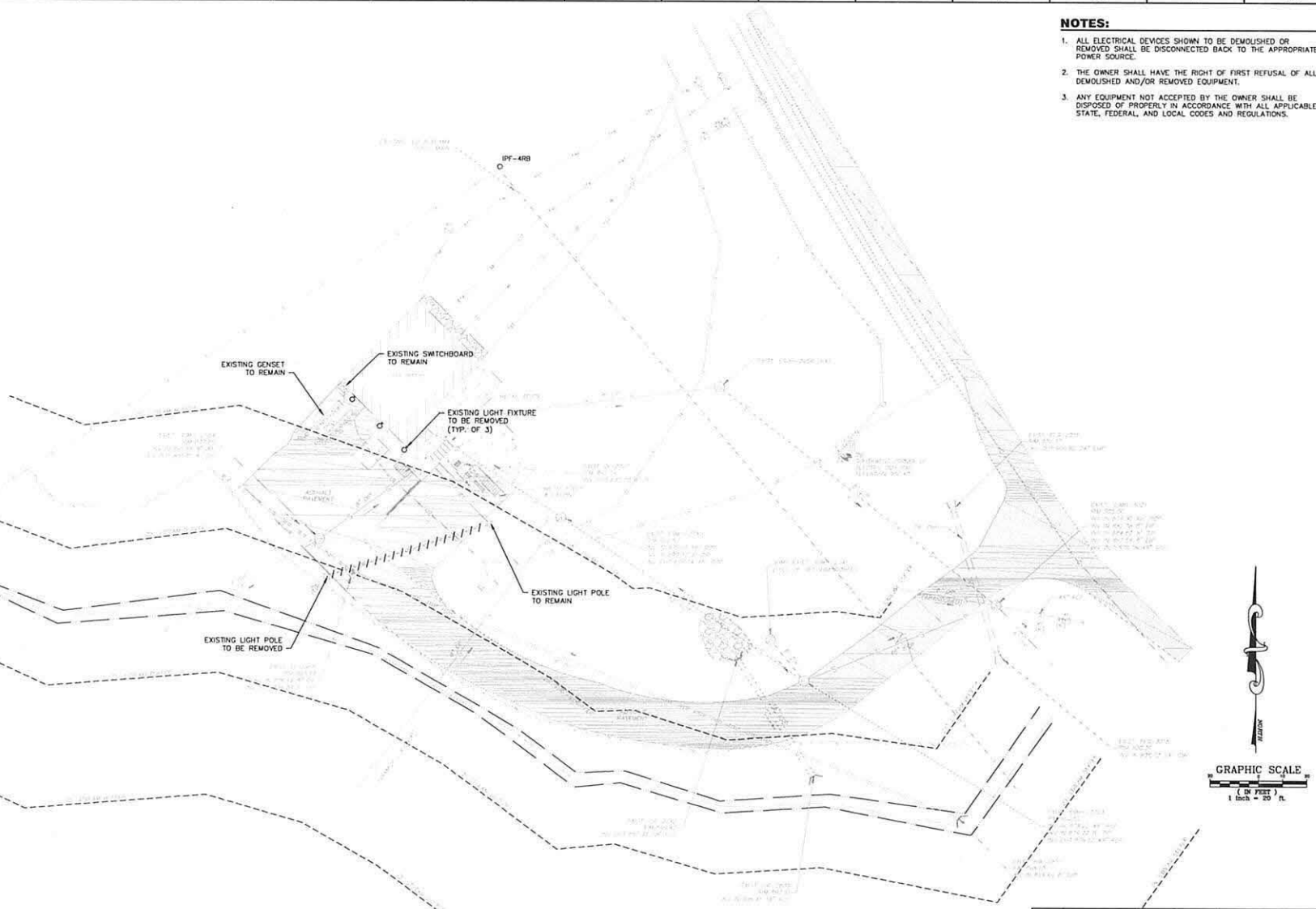

1 E-101 **ELECTRICAL DEMOLITION SITE PLAN**
SCALE: 1" = 20'

KEY ENGINEERING GROUP INC.
3539-B WESLEY CHAPEL RD,
DECATUR GA 30034
TEL: (770) 987-7111; FAX: (770) 987-3371

PRIME ENGINEERING INCORPORATED
1715 NORTHSIDE PARKWAY NW
TO NORTHCREEK, SUITE 200
ATLANTA, GEORGIA 30327
404-425-7100

PROJECT:
CHATTAHOOCHEE III PUMP STATION
JOHNS CREEK, GEORGIA
PREPARED FOR:
FULTON COUNTY DEPARTMENT OF PUBLIC WORKS

REVISIONS

NO.	DATE	DESCRIPTION
A	04-30-13	30% SUBMITTAL
B	09-06-13	60% SUBMITTAL
C	12-06-13	90% SUBMITTAL
D	01-17-14	100% SUBMITTAL
E	11-21-14	CONSTRUCTION DOCUMENTS

SEAL

GEORGIA REGISTERED PROFESSIONAL ENGINEER No. 02-2020 EMMANUEL YUH

DATE:

© 2013 PRIME ENGINEERING, INC. Scales, as stated hereon, are valid on the original drawing; the dimensions of which are 22 by 34 inches. These scales, noted hereon, are hereby changed by the ratio of the overall sheet dimensions of the print to corresponding dimensions of the original drawing. This drawing is the property of PRIME ENGINEERING, INCORPORATED and is not to be reproduced or copied in whole or in part. It is only to be used for the project and site specifically identified herein and is not to be used on any other project. It is to be returned upon request.

DRAWING TITLE
PUMP STATION SITE PLAN - ELECTRICAL DEMOLITION

DRAWING DATE 04-30-13	DRAWN BY KEY
DRAWING SCALE 1"=20'	DESIGNED BY KEY
PROJECT NUMBER 2015-0028	CHECKED BY RRM
DRAWING NUMBER E-101	

NOT ISSUED FOR CONSTRUCTION

C:\Users\Jason\Desktop\Chattahoochee Pump Station (11-19-14 evening)\E-101-2015-0028.dwg Sun, 11/23/14 7:50 PM

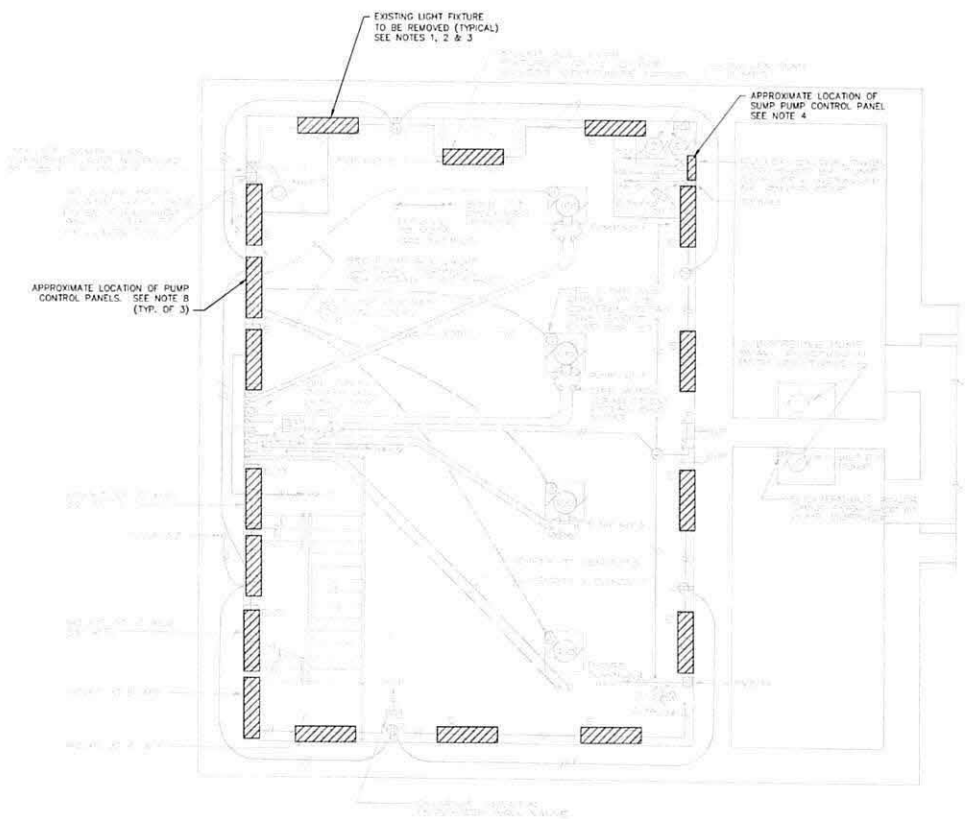

1 / E-102 **BOTTOM PLAN - ELECTRICAL DEMOLITION**
SCALE: 1/4" = 1'-0"

DEMOLITION NOTES:

1. THE CONTRACTOR SHALL FIELD VERIFY ALL EXISTING CIRCUITS IN THE AREAS SLATED FOR DEMOLITION TO TRACE CIRCUITS PRIOR TO DEMOLITION TO DETERMINE THE POWER SOURCE AND MARK SAME ON PANEL SCHEDULE AS SPARES FOR UTILIZATION DURING THE INSTALLATION OF NEW DEVICE AND FIXTURES DURING THE NEXT PHASE. EXISTING SPARE/SPACES CAN BE REUSED FOR THE NEW WORK PROVIDED ALL REQUIREMENTS OF THE NEC ARE COMPLIED WITH. UPDATED AS-BUILT PANELBOARD AND PLANS SHALL BE SUBMITTED PRIOR TO FINAL PAYMENT.
2. CONTRACTOR SHALL DE-ENERGIZE AND REMOVE ALL LIGHT FIXTURES, LAMPS AND ALL ASSOCIATED HARDWARE FOR A COMPLETE DEMOLITION. EXISTING WIRING SHALL BE REMOVED BACK TO POWER SOURCE. EXISTING CONDUIT SHALL REMAIN AND CAN BE REUSED FOR THE NEW SCOPE OF WORK PROVIDED THE INSTALLATION IS IN COMPLIANCE WITH NEC 2011. THE OWNER HAS RIGHT OF FIRST REFUSAL ON MATERIAL. THE CONTRACTOR SHALL PROPERLY DISPOSE OF MATERIAL IF THE OWNER DECIDES IT'S NOT SALVAGEABLE.
3. THE CONTRACTOR SHALL PATCH EXISTING WALLS TO MATCH EXISTING WHERE DEMOLITION EFFORTS DISTURB FINISHES.
4. THE CONTRACTOR SHALL RELOCATE SUMP PUMP CONTROL PANEL TO GROUND LEVEL WITH ASSOCIATED WIRING.
5. CAP ABANDONED PUMP CABLE CONDUITS AT PUMP AT FLOOR.
6. REMOVE AND REPLACE ALL EMERGENCY EXIT LIGHTS.
7. PUMP STATION BOTTOM PLAN IN DRY PIT SHALL BE DESIGNATED AS CLASS I, DIV II.
8. THE CONTRACTOR SHALL REMOVE THE EXISTING PUMP DISCONNECT SWITCHES AND ASSOCIATED WIRING.

GRAPHIC SCALE
4' 2' 1' 0 2' 4' 8' 12'
1/4" = 1'-0"

KEY ENGINEERING GROUP INC.
3539-B WESLEY CHAPEL RD,
DECATUR GA 30034
TEL: (770) 987-7111; FAX: (770) 987-3371

PROJECT:
CHATTAHOOCHEE III PUMP STATION
JOHNS CREEK, GEORGIA
PREPARED FOR:
FULTON COUNTY DEPARTMENT OF PUBLIC WORKS

PRIME ENGINEERING INCORPORATED
7175 NORTHSIDE PARKWAY NW
SONG CHICREEK, SUITE 200
ATLANTA, GEORGIA 30327
404-425-7100

REVISIONS

No.	DATE	DESCRIPTION
A	04-30-13	SUBMITTAL
B	09-06-13	SUBMITTAL
C	12-06-13	SUBMITTAL
D	01-17-14	SUBMITTAL
E	11-21-14	CONSTRUCTION DOCUMENTS

SEAL
GEORGIA DESIGNED & EMPLOYED
No. 17220 PROFESSIONAL ENGINEER
DATE

© 2013 PRIME ENGINEERING, INC.
Scales, as a rule, have been omitted on the original drawing; the dimensions of which are 22 by 34 inches. These scales, noted hereon, are hereby changed by the reproduction process. Dimensions of the print to corresponding dimensions of the original drawing. This drawing is the property of PRIME ENGINEERING, INCORPORATED and is not to be reproduced or copied in whole or in part. It is only to be used for the project and site specifically identified herein and is not to be used on any other project. It is to be returned upon request.

DRAWING TITLE
PUMP STATION BOTTOM FLOOR PLAN - ELECTRICAL DEMOLITION

DRAWN BY	KEY
DESIGNED BY	KEY
CHECKED BY	HRM
DRAWING DATE	04-30-13
DRAWING SCALE	AS SHOWN
PROJECT NUMBER	2015-0028
DRAWING NUMBER	E-102

NOT ISSUED FOR CONSTRUCTION

C:\Users\Jason\Dentsis\Chattahoochee Pump Station (11-19-14 example)\E-02-2015-0028.dwg Sun, 11/23/14 7:50 PM

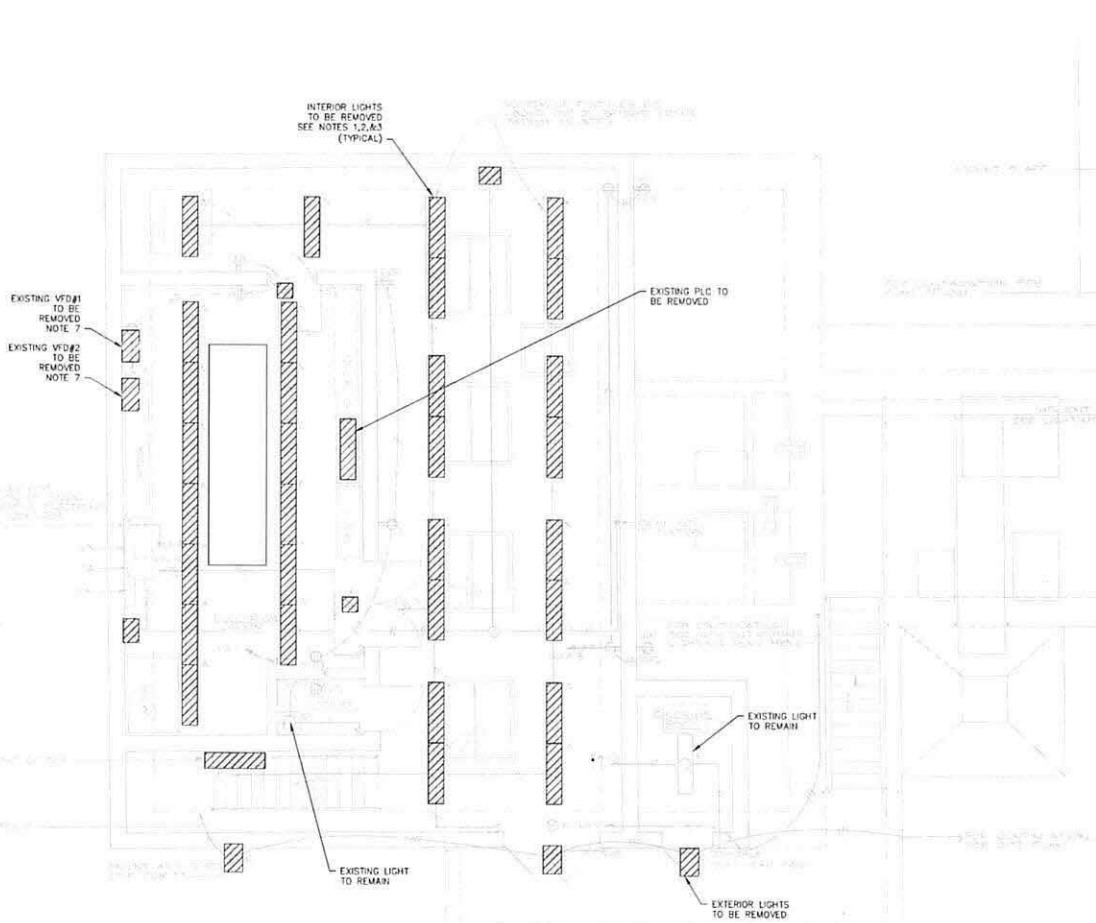

1 E-103 **ENTRANCE FLOOR PLAN - ELECTRICAL DEMOLITION**
SCALE: 1/4" = 1'-0"

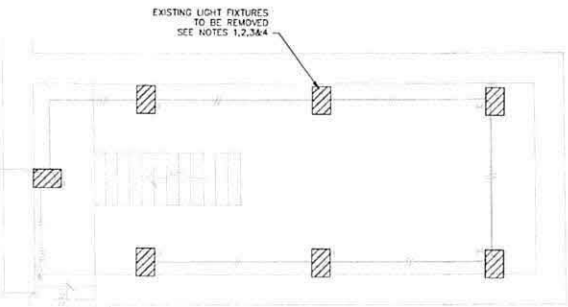

2 E-103 **INFLUENT CHANNEL DEMOLITION PLAN**
SCALE: 1/4" = 1'-0"

DEMOLITION NOTES:

1. THE CONTRACTOR SHALL FIELD VERIFY ALL EXISTING CIRCUITS IN THE AREAS SLATED FOR DEMOLITION TO TRACE CIRCUITS PRIOR TO DEMOLITION TO DETERMINE THE POWER SOURCE AND MARK SAME ON PANEL SCHEDULE AS SPARES FOR UTILIZATION DURING THE INSTALLATION OF NEW DEVICE AND FIXTURES DURING THE NEXT PHASE. EXISTING SPARE/SPACES CAN BE REUSED FOR THE NEW WORK PROVIDED ALL REQUIREMENTS OF THE NEC ARE COMPLIED WITH. UPDATE AS-BUILT PANELBOARD AND PLANS SHALL BE SUBMITTED PRIOR TO FINAL PAYMENT.
2. CONTRACTOR SHALL DE-ENERGIZE AND REMOVE ALL LIGHT FIXTURES, LAMPS AND ALL ASSOCIATED HARDWARE FOR A COMPLETE DEMOLITION. EXISTING WIRING SHALL BE REMOVED BACK TO POWER SOURCE. EXISTING CONDUIT SHALL REMAIN AND CAN BE REUSED FOR THE NEW SCOPE OF WORK PROVIDED THE INSTALLATION IS IN COMPLIANCE WITH NEC 2011. THE OWNER HAS RIGHT OF FIRST REFUSAL ON MATERIAL. THE CONTRACTOR SHALL PROPERLY DISPOSE OF MATERIAL IF THE OWNER DECIDES IT'S NOT SALVAGEABLE.
3. THE CONTRACTOR SHALL PATCH EXISTING WALLS TO MATCH EXISTING WHERE DEMOLITION EFFORTS DISTURBS FINISHES.
4. THE CONTRACTOR SHALL DISCONNECT THIS FIXTURE AT JB AND PULL OUT EXISTING WIRES AND INSTALL NEW WIRES TO MATCH EXISTING CONDUIT TO REMAIN IN-PLACE FOR REUSE. VERIFY THAT NONE OF THE SEALS FOR HAZARDOUS CLASSIFICATION APPLICATION ARE DAMAGED.
5. REMOVE AND REPLACE ALL EMERGENCY EXIT LIGHTS.
6. PUMP STATION ENTRANCE FLOOR PLAN SHALL BE DESIGNATED AS CLASS I, DIV II.
7. REMOVE EXISTING VFD'S AND CREATE SPACE FOR (3) NEW VFD'S BETWEEN EXISTING ASCO SWITCH AND EXHAUST FAN (APPROXIMATELY 10'-8")

GRAPHIC SCALE
4' 2' 1' 0 2' 4' 8' 12'
1/4" = 1'-0"

KEY ENGINEERING GROUP INC.
3539-B WESLEY CHAPEL RD.
DECATUR GA 30034
TEL: (770) 987-7111; FAX: (770) 987-3371

PRIME ENGINEERING INCORPORATED
3715 NORTHSIDE PARKWAY NW
300 NORTHCREEK, SUITE 200
ATLANTA, GEORGIA 30327
404.425.7100

PROJECT:
CHATTAHOOCHEE III PUMP STATION
JOHNS CREEK, GEORGIA

PREPARED FOR:
FULTON COUNTY DEPARTMENT OF PUBLIC WORKS

REVISIONS

NO.	DATE	DESCRIPTION
A	04-30-13	SCR SUBMITTAL
B	09-06-13	SCR SUBMITTAL
C	12-06-13	SCR SUBMITTAL
D	01-17-14	SCR SUBMITTAL
E	11-21-14	CONSTRUCTION DOCUMENTS

SEAL

© 2013 PRIME ENGINEERING, INC. Scales, as stated herein, are valid as to the original drawing the dimensions of which are 22 by 34 inches. These scales, noted herein, are hereby changed to the extent that they have been reproduced at the print to corresponding dimensions of the original drawing. This drawing is the property of PRIME ENGINEERING, INC. and is not to be used in whole or in part. It is only to be used for the project and site specifically identified herein and is not to be used on any other project. It is to be returned upon request.

DRAWING TITLE
PUMP STATION ENTRANCE FLOOR PLAN - ELECTRICAL DEMOLITION

DRAWN BY	KEY
DESIGNED BY	KEY
CHECKED BY	HRM
DRAWING DATE	04-30-13
DRAWING SCALE	AS SHOWN
PROJECT NUMBER	2015-0028
DRAWING NUMBER	E-103

NOT ISSUED FOR CONSTRUCTION

C:\Users\Admin\Desktop\Chattahoochee Pump Station (11-19-14 eserving)\E-103-2015-0028.dwg Sun, 11/23/14 2:53 PM

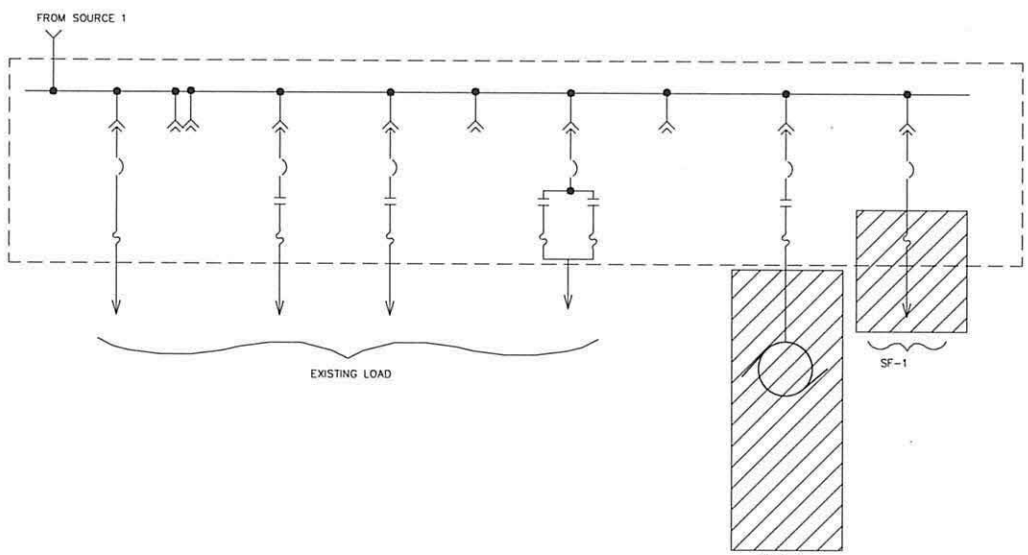

1 E-106 **EXISTING MCC-A SINGLE LINE DIAGRAM**
NTS

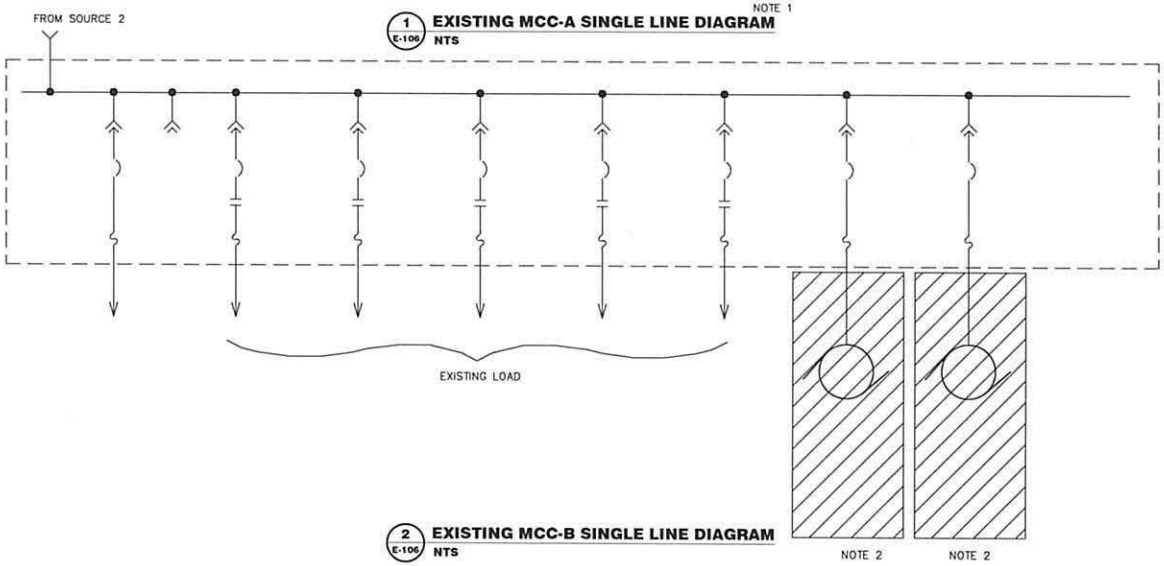

2 E-106 **EXISTING MCC-B SINGLE LINE DIAGRAM**
NTS

DEMOLITION NOTES:

1. DISCONNECT PUMP AND VFD BACK TO MCC.
2. DISCONNECT PUMP AND VFD BACK TO MCC.
3. DISCONNECT FEEDERS BACK TO SERVICE.

KEY ENGINEERING GROUP INC.
3539-B WESLEY CHAPEL RD.
DECATUR GA 30034
TEL: (770) 987-7111; FAX: (770) 987-3371

PRIME ENGINEERING INCORPORATED
375 NORTHSIDE PARKWAY NW
KONDITHERE, SUITE 200
ATLANTA, GEORGIA 30327
404-225-7100

PROJECT:
CHATTAHOOCHEE III PUMP STATION
JOHNS CREEK, GEORGIA
PREPARED FOR:
FULTON COUNTY DEPARTMENT OF PUBLIC WORKS

REVISIONS

No.	DATE	DESCRIPTION
A	04-30-2013	SUBMITTAL
B	09-06-2013	SUBMITTAL
C	12-05-2013	SUBMITTAL
D	01-17-2014	SUBMITTAL
0	11-21-2014	CONSTRUCTION DOCUMENTS

SEAL

© 2013 PRIME ENGINEERING, INC.
Scales, as stated hereon, are valid as in the original drawing; the dimensions of which are 22 by 34 inches. These scales, noted hereon, are hereby changed by the copy of the current date hereunder and the print to corresponding dimensions of the original drawing. This drawing is the property of PRIME ENGINEERING, INC. It is not to be used, nor shall it be reproduced or copied in whole or in part. It is only to be used for the project and site specifically identified herein and is not to be used on any other project. It is to be returned upon request.

DRAWING TITLE
ELECTRICAL ONE LINE DIAGRAM - DEMOLITION

DRAWN BY: KEY
DRAWING DATE: 04-30-13
DESIGNED BY: KEY
DRAWING SCALE: AS SHOWN
CHECKED BY: HRM
PROJECT NUMBER: 2015-0028
DRAWING NUMBER: E-106

NOT ISSUED FOR CONSTRUCTION

C:\Users\Jason\Desktop\Chattahoochee Pump Station (01-19-14 example)\JC-106-2015-0028.dwg Sun, 11/23/14 7:51 PM

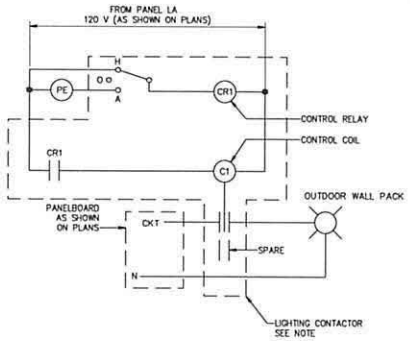

2 / E-201 OUTDOOR LIGHTING CONTROL DIAGRAM
NOT TO SCALE

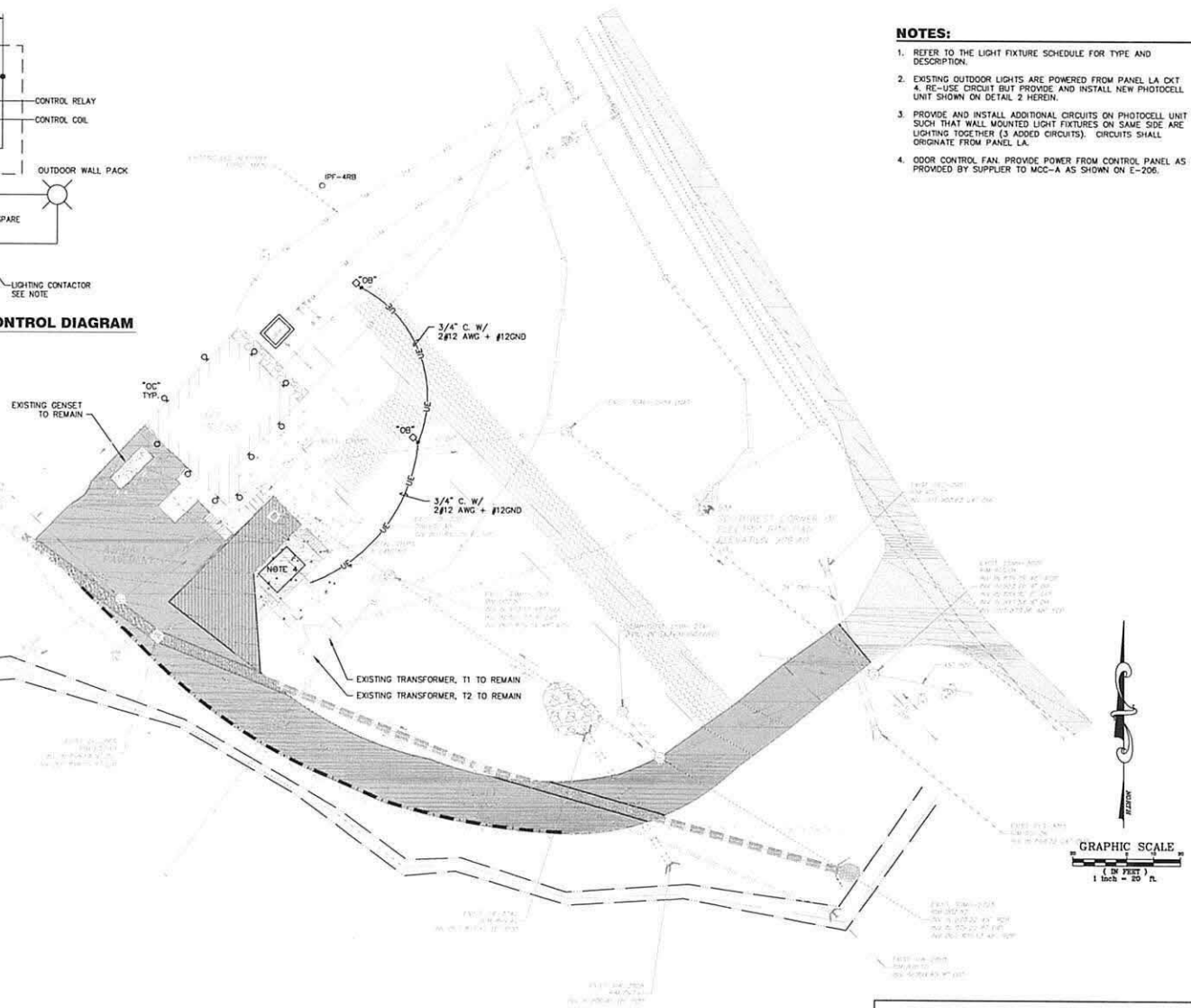

1 / E-201 ELECTRICAL SITE PLAN
SCALE: 1" = 20'

NOTES:

1. REFER TO THE LIGHT FIXTURE SCHEDULE FOR TYPE AND DESCRIPTION.
2. EXISTING OUTDOOR LIGHTS ARE POWERED FROM PANEL LA CKT 4. RE-USE CIRCUIT BUT PROVIDE AND INSTALL NEW PHOTOCELL UNIT SHOWN ON DETAIL 2 HEREIN.
3. PROVIDE AND INSTALL ADDITIONAL CIRCUITS ON PHOTOCELL UNIT SUCH THAT WALL MOUNTED LIGHT FIXTURES ON SAME SIDE ARE LIGHTING TOGETHER (3 ADDED CIRCUITS). CIRCUITS SHALL ORIGINATE FROM PANEL LA.
4. ODOR CONTROL FAN. PROVIDE POWER FROM CONTROL PANEL AS PROVIDED BY SUPPLIER TO MCC-A AS SHOWN ON E-206.

KEY ENGINEERING GROUP INC.
3539-B WESLEY CHAPEL RD.
DECATUR GA 30034
TEL: (770) 987-7111; FAX: (770) 987-3371

PRIME ENGINEERING INCORPORATED
3715 NORTHSIDE PARKWAY NW
300 NORTHCREEK, SUITE 200
ATLANTA, GEORGIA 30327
404-425-7100

PROJECT:
CHATTAHOOCHEE III PUMP STATION
JOHNS CREEK, GEORGIA
PREPARED FOR:
FULTON COUNTY DEPARTMENT OF PUBLIC WORKS

REVISIONS

No.	DATE	DESCRIPTION
A	04-30-13	30% SUBMITTAL
B	09-06-13	90% SUBMITTAL
C	12-09-13	90% SUBMITTAL
D	01-17-14	100% SUBMITTAL
0	11-21-14	CONSTRUCTION DOCUMENTS

SEAL

© 2013 PRIME ENGINEERING, INC.
Scales, as stated herein, are valid as in the original drawing; the dimensions of which are 22 by 34 inches. These scales, and dimensions, are hereby changed by the copying and reproduction of this drawing by the print to corresponding dimensions of the original drawing. This drawing is the property of PRIME ENGINEERING, INC. and shall not be used in whole or in part, reproduced or copied in whole or in part. It is only to be used for the project and site specifically identified herein and is not to be used on any subsequent projects, or be retrieved upon request.

DRAWING TITLE
PUMP STATION SITE PLAN - ELECTRICAL PLAN

DRAWN BY	KEY
DRAWING DATE	04-30-13
DESIGNED BY	KEY
DRAWING SCALE	AS SHOWN
CHECKED BY	HRM
PROJECT NUMBER	2015-0028
DRAWING NUMBER	E-201

NOT ISSUED FOR CONSTRUCTION

C:\Users\Admin\Desktop\Chattahoochee Pump Station (11-19-14 evening)\K-201-2015-0028.dwg Sun, 11/23/14 7:51 PM

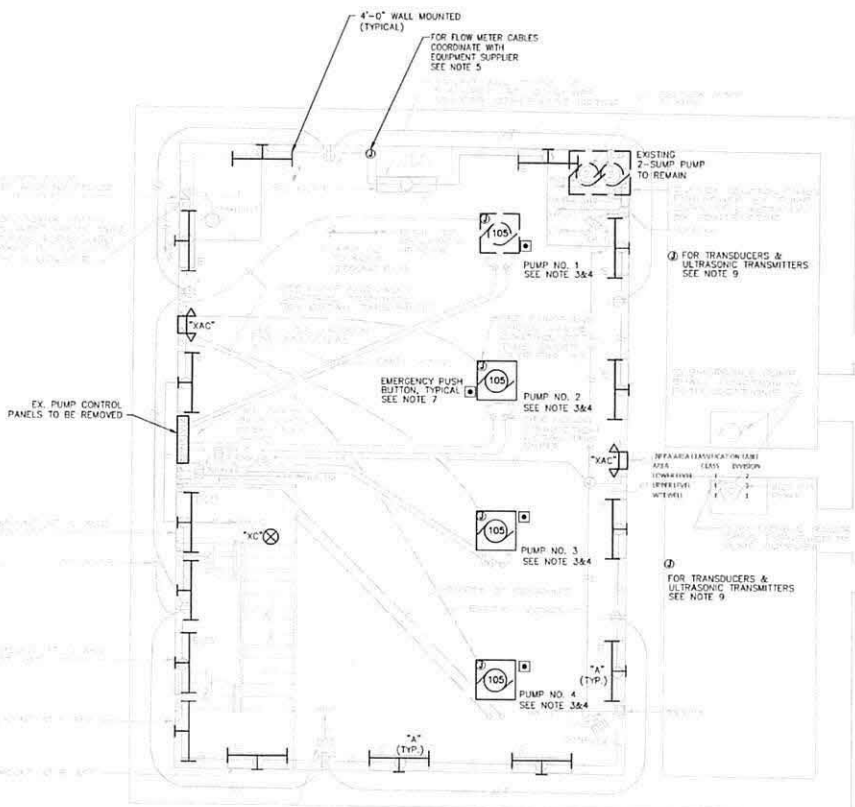

1 E-202 **BOTTOM PLAN - ELECTRICAL**
SCALE: 1/4" = 1'-0"

NOTES:

1. SEE SHEET E-207 FOR LIGHT FIXTURE SCHEDULES.
2. NOT USED
3. WIRING TO ALL OTHER PUMPS SHALL BE NEW AS SUPPLIED BY PUMP MANUFACTURER.
4. PROVIDE AND INSTALL NEW WIRES AND VFD'S FOR PUMPS 1-4.
5. PROVIDE 20A, 120V CIRCUIT TO FLOW METER. COORDINATE EXACT LOCATION WITH EQUIPMENT SUPPLIER. INSTALL TWO TWISTED SHIELDED PAIR IN CONDUIT TO PLC.
6. ALL PUMP WIRING SHALL BE AS SUPPLIED BY PUMP MANUFACTURER FOR TERMINATION AT GROUND LEVEL.
7. INSTALL EMERGENCY PUSH BUTTON AND SUPPORT STAND ADJACENT TO PUMP. CIRCUIT TO RESPECTIVE PUMP VFD FOR EMERGENCY SHUT OFF OF PUMP. PROVIDE ALL CONTROL CIRCUITS AND CONDUITS.
8. PROVIDE PACKAGED COMBUSTIBLE GAS DETECTOR FOR THE WET WELL INCLUDING TRANSMITTER, ALRAMS AND LIGHTS. PROBE SHALL BE MOUNTED IN WET WELLS 1 & 2. TRANSMITTER SHALL BE MOUNTED ABOVE THE WET WELL. PROVIDE GAS ALARM AND GAS O.K. LIGHTS. PROVIDE WIRES FOR ALARM TO THE NEW CONTROL PANEL. PROVIDE STROBE INSIDE THE WET WELLS. PROVIDE 20A, 120V CIRCUIT TO POWER THE DETECTOR.
9. PROVIDE PRESSURE TRANSDUCERS AND ULTRASONIC TRANSMITTERS AT GROUND LEVEL AND COORDINATE WITH INSTRUMENTATION DRAWINGS. CONDUITS SHALL BE PVC COATED GALVANIZED RIGID STEEL. PROVIDE REMOVABLE DEVICE. PROVIDE 20A, 120V CIRCUIT TO TRANSMITTER. INSTALL TWO TWISTED SHIELDED PAIR IN CONDUIT TO PLC.
10. NOT USED
11. GENERAL NOTE FOR THIS SHEET--CLASS I, DIV II LOCATION. PROVIDE SEAL OFF FITTINGS AND EXPLOSION PROOF DEVICES.

SPECIAL EQUIPMENT CONNECTION

A. CONTRACTOR SHALL VERIFY LOCATIONS OF OUTLETS WITH ALL OTHER TRADES AND OWNER'S EQUIPMENT SUPPLIER. VERIFY PROPER CONNECTIONS AND CIRCUIT SIZES WITH EQUIPMENT SHOP DRAWINGS PRIOR TO ROUGH-IN. CONTACT ENGINEER CONCERNING ANY DISCREPANCIES FOUND OR CONFLICTS THAT CANNOT BE RESOLVED ON THE JOB SITE. ELECTRICAL CONTRACTOR SHALL MAKE ALL CONNECTIONS UNLESS NOTED OTHERWISE.

B. NOT USED

C. BREAKER, FUSE AND WIRE SIZES ARE BASED ON CATALOG DATA FROM MANUFACTURER OF EQUIPMENT SPECIFIED. NAMEPLATE DATA ON EQUIPMENT ACTUALLY FURNISHED MAY DIFFER. CONTRACTOR SHALL PROVIDE ELECTRICAL COMPONENTS IN COMPLIANCE WITH NAMEPLATE REQUIREMENTS. NOTIFY ENGINEER OF ANY DIFFERENCES PRIOR TO INSTALLATION. USE CLASS R DUAL ELEMENT FUSES SIZED PER UNIT NAMEPLATE.

D. ALL STARTERS AND COMBINATION DISCONNECT/STARTERS, WHETHER SEPARATE OR IN MOTOR CONTROL CENTER, SHALL BE EQUIPPED WITH H-O-A- SWITCHES AND PILOT LIGHTS IN COVER. CONTROL TRANSFORMER WITH 120 VOLT FUSED SECONDARY, AND 2 SETS OF AUXILIARY CONTACTS FOR USE BY CONTROLS CONTRACTOR. STARTER COILS SHALL BE SUPPLIED WITH VOLTAGE TO MATCH THAT REQUIRED BY CONTROLS SYSTEM. COORDINATE CLOSELY WITH MECHANICAL CONTRACTOR.

NFPA AREA CLASSIFICATION TABLE		
AREA	CLASS	DIVISION
DRY WELL	I	2
ENTRANCE LEVEL	I	2
WET WELL	I	1

GRAPHIC SCALE
4' 2' 1' 0 2' 4' 8' 12'
1/4" = 1'-0"

KEY ENGINEERING GROUP INC.
3539-B WESLEY CHAPEL RD.
DECATUR GA 30034
TEL: (770) 987-7111; FAX: (770) 987-3371

PRIME ENGINEERING INCORPORATED
3715 NORTHSIDE PARKWAY NW
300 NORTHCREEK, SUITE 200
ATLANTA, GEORGIA 30327
404.814.2565 FAX 404.0.0

PROJECT: CHATTAHOOCHEE III PUMP STATION
JOHNS CREEK, GEORGIA
PREPARED FOR: FULTON COUNTY DEPARTMENT OF PUBLIC WORKS

REVISIONS

NO.	DATE	DESCRIPTION
A	04-30-13	SDR SUBMITTAL
B	09-06-13	SDR SUBMITTAL
C	12-06-13	SDR SUBMITTAL
D	01-17-14	SDR SUBMITTAL
E	02-18-15	CONSTRUCTION DOCUMENTS
F	03-17-15	REVISION NO. 1

SEAL

© 2013 PRIME ENGINEERING, INC.
Scales, as stated herein, are valid only on the original drawing; the dimensions of which are 22 by 34 inches. These scales, noted herein, are invalid if changed to the noted formats, or to any other formats of the print to corresponding dimensions of the original drawing. This drawing is the property of PRIME ENGINEERING, INC. and shall not be used, in whole or in part, or reproduced or copied in whole or in part. It is only to be used for the project and site specifically identified herein and is not to be used on any other project. It is to be returned upon request.

DRAWING TITLE: PUMP STATION BOTTOM FLOOR PLAN - ELECTRICAL PLAN

DRAWN BY	KEY
DESIGNED BY	KEY
CHECKED BY	RRM
DRAWING DATE	04-30-13
DRAWING SCALE	AS SHOWN
PROJECT NUMBER	2015-0025
DRAWING NUMBER	E-202

NOT ISSUED FOR CONSTRUCTION

G:_Projects\Chattahoochee Pump Station (11-19-14 events)\IC-202-2015-0025.dwg Tue, 03/17/15 9:12 PM

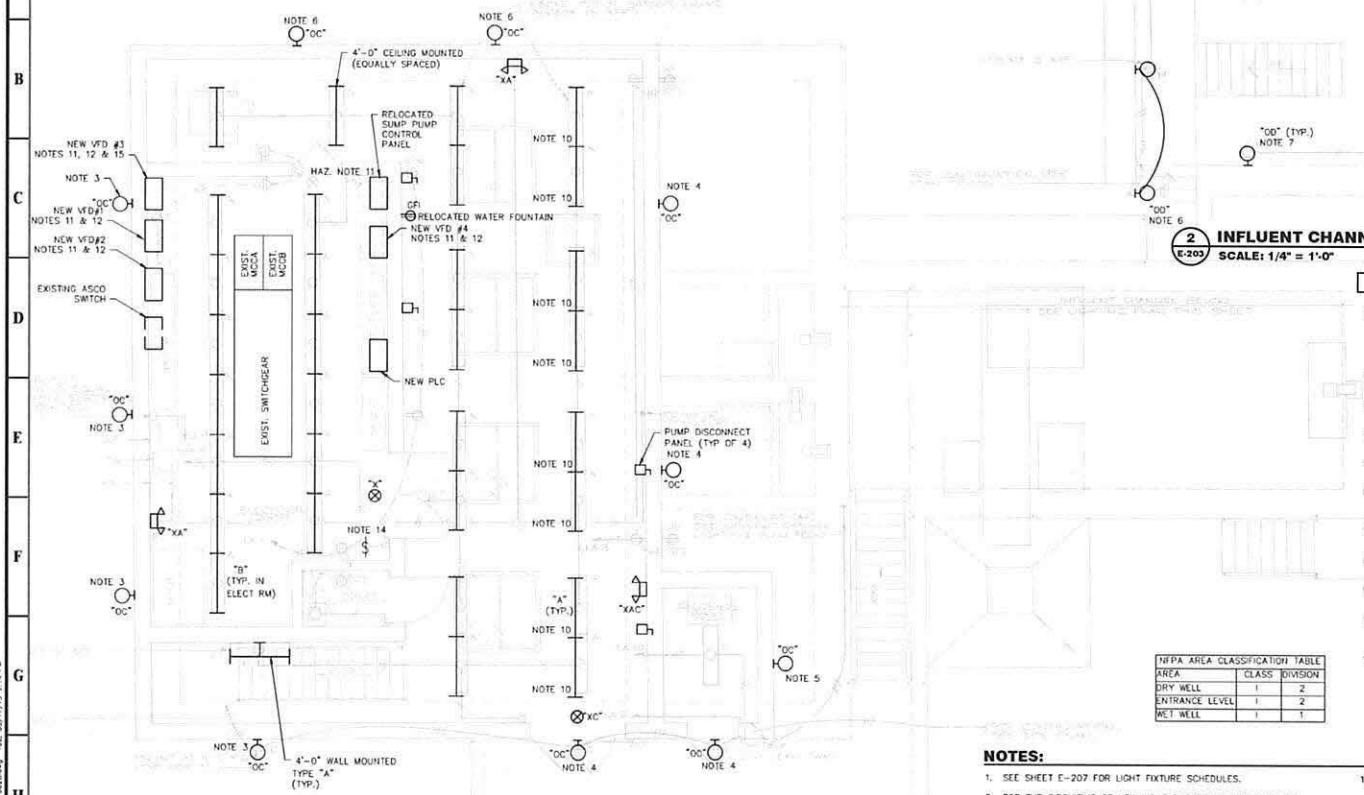

1 E-203 ENTRANCE FLOOR PLAN - ELECTRICAL PLAN

SCALE: 1/4" = 1'-0"

GRAPHIC SCALE

4' 2' 1' 0 2' 4' 8' 12'

1/4" = 1'-0"

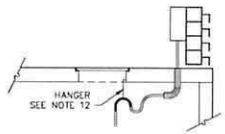

3 E-203 WIRING CONECTION TO PUMPS IN WET WELL

NOT TO SCALE

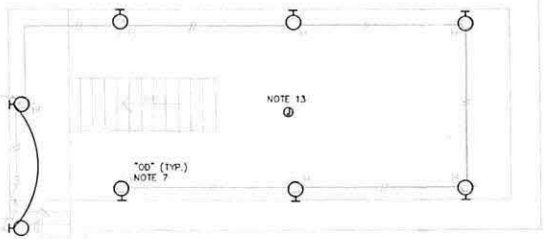

2 E-203 INFLUENT CHANNEL LIGHTING PLAN

SCALE: 1/4" = 1'-0"

HAZARDOUS AREA WIRING NOTES

1. AREA CLASSIFICATION BASED ON NFPA 70 (2011 NEC) UNLESS NOTED OTHERWISE HERE OR AS REQUIRED BY THE NEC. ALL ELECTRICAL EQUIPMENT, DEVICES, APPARATUS, SWITCHGEAR, AND THE LIKE INSTALLED IN AN AREA THAT IS CLASSIFIED ON THIS SITE SHALL BE SUITABLE FOR THAT USE.
2. SEALS REQUIRED WHERE CONDUITS PASS FROM HAZARDOUS TO NON-HAZARDOUS AREA, PER NEC 501.10(B)(3).
3. SEALS REQUIRED WITHIN 18 INCHES OF ALL ARCING DEVICES PER NEC 501.15(A)(1).
4. SEALS REQUIRED IF CONDUIT IS 2 INCHES OR LARGER, PER NEC 501.15(A)(1).
5. ALL BOXES MUST BE EXPLOSION PROOF AND THREADED FOR RIGID OR IMC CONDUIT, PER NEC 501.10(A)(3).
6. PROVIDE NEW WIRES AND CONDUIT FROM EXISTING JB TO NEW LIGHT FIXTURE LOCATION. WIRE SHALL COMPLY WITH HAZARDOUS AREA CLASSIFICATION.
7. BREATHERS AND DRAINS NEEDED IN ALL HUMID LOCATIONS, PER NEC 501.15(F).
8. ALL JOINTS AND FITTINGS MUST BE EXPLOSION PROOF, PER NEC 501.15(C).
9. FLEXIBLE CONNECTIONS MUST BE EXPLOSION PROOF, PER NEC 501.10(A)(2).
10. RECEPTACLES AND PLUGS MUST BE EXPLOSION PROOF AND PROVIDE GROUNDING CONNECTIONS FOR PORTABLE DEVICES, PER NEC 501.145.
11. DISCONNECT EXISTING SUMP PUMP CONTROL PANEL FROM BOTTOM LEVEL AND RELOCATE AS SHOWN. PROVIDE ALL SEALS AS REQUIRED TO TRANSITION FROM THIS LEVEL TO BELOW. REUSE CONDUIT AND/OR EXTEND AS NEEDED WITH NEW WIRES TO MATCH EXISTING. THE CONTRACTOR SHALL COORDINATE WITH EXISTING PUMP MANUFACTURER HOW TO PROPERLY RELOCATE THE CONTROL PANEL AND PROVIDE WIRING CONTINUITY TO THE MOTORS BELOW. PROVIDE WIRES AND CONDUIT BETWEEN NEW LOCATION OF SUMP PUMP AND NEW PLC.

NFPA AREA CLASSIFICATION TABLE		
AREA	CLASS	DIVISION
DRY WELL	I	2
ENTRANCE LEVEL	I	2
WET WELL	I	1

NOTES:

1. SEE SHEET E-207 FOR LIGHT FIXTURE SCHEDULES.
2. FOR THE CIRCUITING OF NEW LIGHT FIXTURES REUSE CONDUITS FROM DEMOLITION PHASE BUT PROVIDE AND INSTALL NEW WIRES IN EXISTING CONDUITS. USE ADEQUATE LUBRICANTS.
3. THESE LIGHT FIXTURES SHALL BE MOUNTED AT LEAST 18 FEET ABOVE GRADE.
4. THESE LIGHT FIXTURES SHALL BE MOUNTED 14 FEET ABOVE FINISHED FLOOR.
5. THIS LIGHT FIXTURE SHALL BE MOUNTED 10 FEET ABOVE FINISHED FLOOR.
6. THESE LIGHT FIXTURES SHALL BE MOUNTED 15 FEET ABOVE GRADE.
7. THESE LIGHT FIXTURES SHALL BE MOUNTED AT SAME HEIGHT AS PREVIOUSLY REMOVED FIXTURES IN THIS AREA.
8. GENERAL NOTE FOR THIS SHEET--REUSE ALL EXISTING DISCONNECTS.
9. GENERAL NOTE FOR THIS SHEET--CLASS I, DIV II LOCATION. EXCEPT FOR OUTDOORS AND ELECTRICAL ROOM. PROVIDE SEAL OFF FITTINGS AND EXPLOSION PROOF DEVICES.
10. MOUNT LIGHT FIXTURES ABOVE TROLLEY.
11. PROVIDE 2 PAIR #16 TWISTED SHIELDED WIRES BETWEEN EACH VFD AND PLC IN 1" CONDUIT. PROVIDE 8 #14 BETWEEN EACH VFD AND PLC IN 1" CONDUIT.
12. PROVIDE KELLUM GRIPS TO SUPPORT ALL PUMP CABLES. KELLUM GRIPS SHALL BE SUPPORTED BY CABLE HANGERS TO BE CONNECTED BELOW THE FLOOR ON SIDES AWAY FROM THE SIDES WHERE PUMP SHALL BE REMOVED. PROVIDE TERMINAL JUNCTION BOX ON WALL ABOVE RUN PUMP CABLE TO THE WALL AT BOTTOM LEVEL. CORE DRILL & STUB THROUGH.
13. PROVIDE ULTRASONIC TRANSMITTERS. CONDUITS SHALL BE PVC COATED GALVANIZED RIGID STEEL. PROVIDE CONDUITS AND CABLE BETWEEN ULTRASONIC LEVEL METER FOR PLC & FOR SIGNAL LIGHTING PANEL FOR POWER. PROVIDE 20A, 120V CIRCUIT TO TRANSMITTER. INSTALL TWO TWISTED SHIELDED PAIR IN CONDUIT TO PLC.
14. PROVIDE CONDUIT AND CABLE FOR AIRFLOW SWITCH ON THE EXHAUST FAN DUCT AND PLC. FIELD VERIFY LOCATION OF SWITCH.
15. FIELD VERIFY EXACT LOCATION FOR VFD'S. SEE NOTE 7/E-103.
16. EXISTING PANEL LA IS BY GE CAT #AQF 3422 ATX SHOP ORDER 162-0N67772. PROVIDE AND INSTALL (10) 20A, 1P BREAKERS IN AVAILABLE SPACE FOR USE FOR ALL MISCELLANEOUS 20A, 1P CIRCUIT REQUIRED BY ADDED EQUIPMENT.

KEY ENGINEERING GROUP INC.
3539-B WESLEY CHAPEL RD,
DECATUR GA 30034
TEL: (770) 987-7111; FAX: (770) 987-3371

PRIME ENGINEERING INCORPORATED
1175 NORTHSIDE PARKWAY NW
300 NORTHCREEK, SUITE 200
ATLANTA, GEORGIA 30327
404-425-7100

PROJECT: CHATTAHOOCHEE III PUMP STATION
JOHNS CREEK, GEORGIA
PREPARED FOR: FULTON COUNTY DEPARTMENT OF PUBLIC WORKS

REVISIONS

NO.	DATE	DESCRIPTION
A	04-30-13	SDE SUBMITTAL
B	09-06-13	SDE SUBMITTAL
C	12-06-13	SDE SUBMITTAL
D	07-17-14	FDCR SUBMITTAL
E	02-13-15	CONSTRUCTION DOCUMENTS
F	03-17-15	ADDENDUM NO. 1

SEAL

© 2013 PRIME ENGINEERING, INC. Scales, as stated hereon, are valid on the original drawing; the dimensions of which are 22 by 34 inches. These scales, and the dimensions shown, may not be valid ratios of the overall sheet dimensions if, after the print to corresponding dimensions of the original drawing. This drawing is the property of PRIME ENGINEERING, INC. and is not to be used for any other purpose, or reproduced or copied in whole or in part. It is only to be used for the project and site specifically identified herein and is not to be used on any other project. It is to be returned upon request.

DRAWING TITLE: PUMP STATION ENTRANCE FLOOR PLAN - ELECTRICAL PLAN

DRAWING DATE	04-30-13
DRAWN BY	KEY
DRAWING SCALE	AS SHOWN
DESIGNED BY	KEY
PROJECT NUMBER	2015-0028
CHECKED BY	RRM
DRAWING NUMBER	E-203

NOT ISSUED FOR CONSTRUCTION

C:_Projects\Chattahoochee Pump Station (11-15-14 events)\IC-203-2015-0028.dwg Tue, 03/17/15 9:14 AM

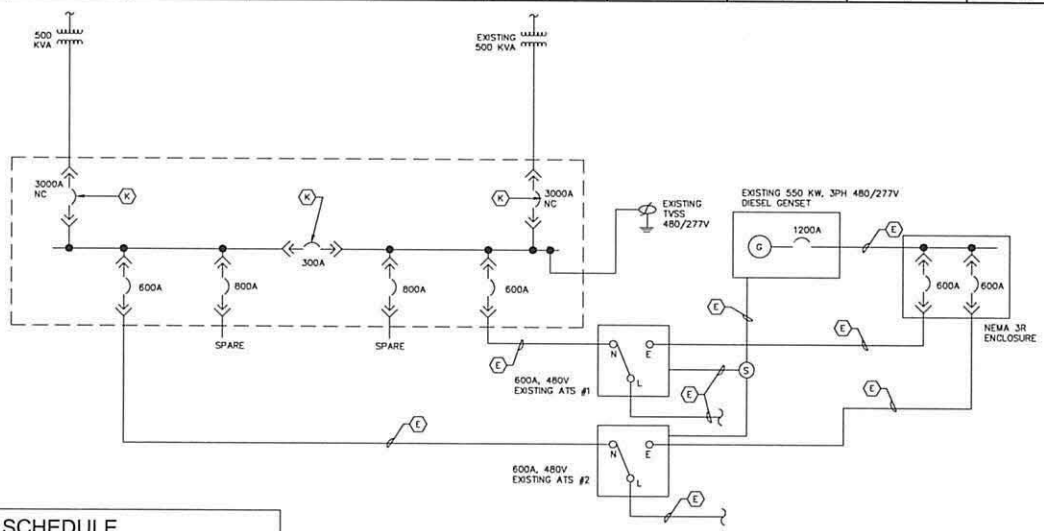

FEEDER SCHEDULE

TAG	DESCRIPTION
1	(3) 4" C. W/ PULL WIRE FOR FUTURE USE
2	4 SETS OF 4" CONDUIT WITH 4#500KCMIL + #3/0 GND
3	3 SETS OF 3" CONDUIT WITH 4#350KCMIL + #1/0 GND
4	3 SETS OF 3" CONDUIT WITH 3#350KCMIL + #1/0 GND
5	1 -1/2" CONDUIT WITH 4#1/0AWG + #6 GND
6	1-1/2" CONDUIT WITH 3#1/0AWG + #6 GND
7	1-1/4" CONDUIT WITH 3#2AWG + #8 GND
8	2-1/2" CONDUIT WITH 4#4/0AWG + #2 GND
E	EXISTING WIRING TO REMAIN AND/OR BE MATCHED IN FIELD
K	KIRK-KEY INTERLOCK (EXISTING)

1 E-205 **EXISTING SINGLE LINE DIAGRAM - FOR REFERENCE**
NTS

KEY ENGINEERING GROUP INC.
3539-B WESLEY CHAPEL RD,
DECATUR GA 30034
TEL: (770) 987-7111; FAX: (770) 987-3371

PRIME ENGINEERING INCORPORATED
915 NORTHSIDE PARKWAY NW
NO NORTH CREEK, SUITE 200
ATLANTA, GEORGIA 30327
404-425-7100

PROJECT:
CHATTAHOOCHEE III PUMP STATION
JOHNS CREEK, GEORGIA
PREPARED FOR:
FULTON COUNTY DEPARTMENT OF PUBLIC WORKS

REVISIONS

NO.	DATE	DESCRIPTION
A	04-30-13	50% SUBMITTAL
B	09-06-13	80% SUBMITTAL
C	12-06-13	90% SUBMITTAL
D	01-17-14	100% SUBMITTAL
0	11-21-14	CONSTRUCTION DOCUMENTS

SEAL

© 2013 PRIME ENGINEERING, INC. Scales, as stated hereon, are valid on the original drawing; the dimensions of which are 22 by 34 inches. These scales, noted hereon, are hereby changed by the ratio of the overall sheet dimensions of the print to corresponding dimensions of the original drawing. This drawing is the property of PRIME ENGINEERING, INCORPORATED and is not to be reproduced or copied in whole or in part. It is only to be used for the project and site specifically identified herein and is not to be used on any other project. It is to be returned upon request.

DRAWING TITLE
ELECTRICAL ONE LINE DIAGRAM

DRAWING DATE 04-30-13
DRAWN BY KEY
DRAWING SCALE AS SHOWN
DESIGNED BY KEY
PROJECT NUMBER 2015-0028
CHECKED BY RRM
DRAWING NUMBER E-205
NOT ISSUED FOR CONSTRUCTION

C:\Users\Jason\Desktop\Chattahoochee Pump Station (11-19-14 evening)\E-205-2015-0028.dwg Sun, 11/23/14 7:52 PM

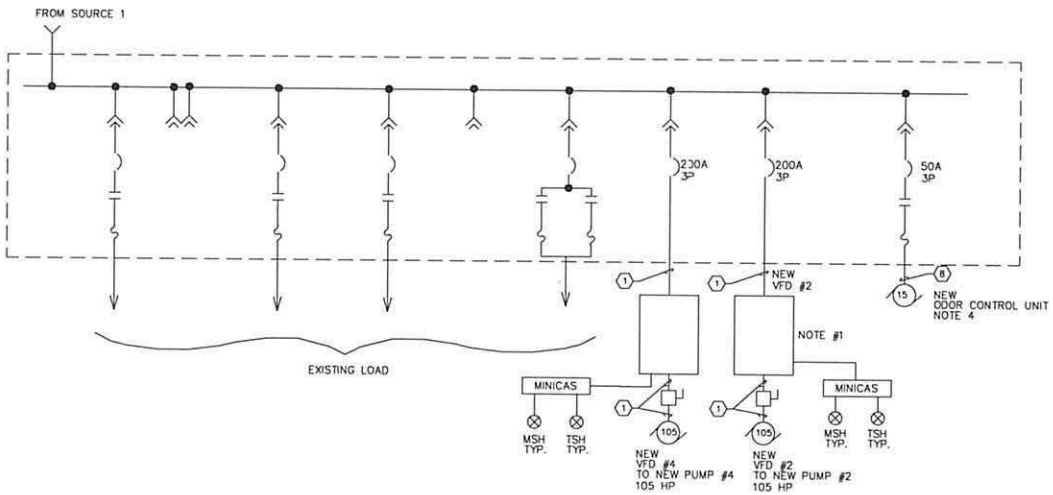

1 E-206 MODIFIED MCC-A SINGLE LINE DIAGRAM
NTS

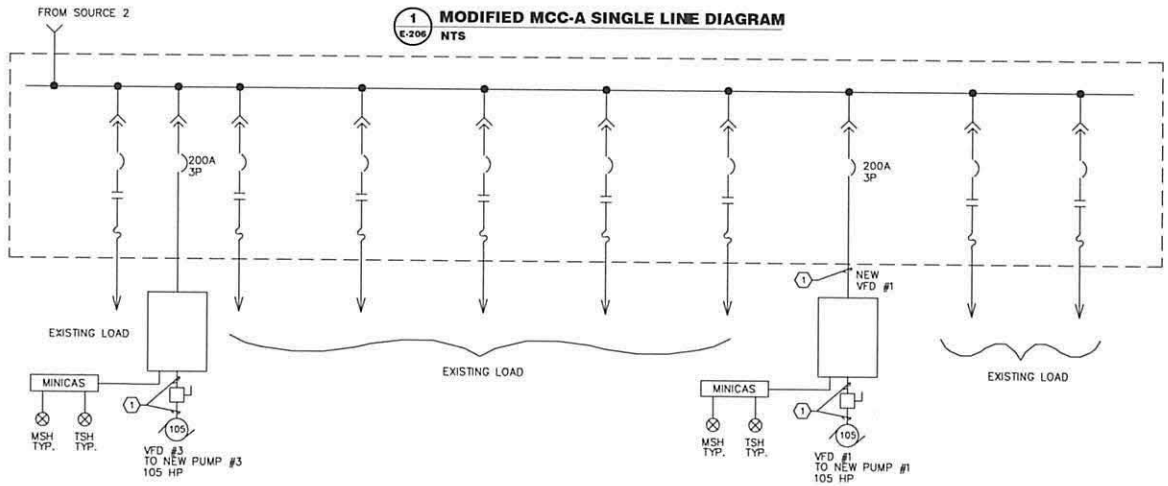

2 E-206 MODIFIED MCC-B SINGLE LINE DIAGRAM
NTS

FEEDER SCHEDULE

TAG	DESCRIPTION
1	2" CONDUIT W/ 3#3/0 + #1 GND
2	4 SETS OF 4" CONDUIT WITH 4#500KCMIL + #3/0 GND
3	3 SETS OF 3" CONDUIT WITH 4#350KCMIL + #1/0 GND
4	3 SETS OF 3" CONDUIT WITH 3#350KCMIL + #1/0 GND
5	1 -1/2" CONDUIT WITH 4#1/0AWG + #6 GND
6	1-1/2" CONDUIT WITH 3#1/0AWG + #6 GND
7	1-1/4" CONDUIT WITH 3#2AWG + #8 GND
8	1/2" CONDUIT WITH 3#10AWG + #12 GND

NOTES:

1. THIS VFD WAS INSTALLED IN 2012. DISCONNECT IN ORDER TO REPLACE WITH NEW.
2. THIS VFD WAS INSTALLED IN 2013. DISCONNECT IN ORDER TO REPLACE WITH NEW.
3. CONTRACTOR SHALL PROVIDE AND INSTALL ALL NEW CONDUCTORS FROM MCC TO EACH VFD AND FROM EACH VFD TO PUMP SUBCAB JUNCTION BOX AS SUPPLIED BY MANUFACTURER.
4. PROVIDE STARTER UNIT EQUIVALENT TO GE MODEL D104-CR3060F.
5. PROVIDE A MINICAS FOR ALL PUMPS. MINICAS SHALL BE MOUNTED IN THE ELECTRICAL ROOM AND THEN SHUT-DOWN THE VFD'S IN CASE OF A FAULT. PROVIDE CONDUIT AND CABLES BETWEEN MINICAS AND VFD. MINICAS SHALL BE MOUNTED NEXT TO CONTROL PANEL. THESE ARE 2"x4" DEVICES.

KEY ENGINEERING GROUP INC.
3539-B WESLEY CHAPEL RD.
DECATUR GA 30034
TEL: (770) 987-7111; FAX: (770) 987-3371

PRIME ENGINEERING INCORPORATED
715 NORTHSIDE PARKWAY NW
SONORTHCREEK SUITE 200
ATLANTA, GEORGIA 30327
404-425-7100

PROJECT: CHATTAHOOCHEE III PUMP STATION
JOHNS CREEK, GEORGIA
PREPARED FOR: FULTON COUNTY DEPARTMENT OF PUBLIC WORKS

REVISIONS

NO.	DATE	DESCRIPTION
A	04-30-13	SDCS SUBMITTAL
B	09-06-13	SDCS SUBMITTAL
C	12-06-13	SDCS SUBMITTAL
D	01-17-14	SDCS SUBMITTAL
E	11-21-14	CONSTRUCTION DOCUMENTS

SEAL

© 2013 PRIME ENGINEERING, INC. Scales, as stated hereon, are valid on the original drawing; the dimensions of which are 22 by 34 inches. These scales, and the sizes of the objects shown, are in the ratio of the overall sheet dimensions of the print to corresponding dimensions of the original drawing. This drawing is the property of PRIME ENGINEERING, INC. (PRIME) and is not to be reproduced or copied in whole or in part. It is only to be used for the project and site specifically identified herein and is not to be used on any other project. It is to be returned upon request.

DRAWING TITLE: ELECTRICAL ONE LINE DIAGRAM

DRAWN BY	KEY
DESIGNED BY	KEY
CHECKED BY	RRM
DRAWING DATE	04-30-13
DRAWING SCALE	AS SHOWN
PROJECT NUMBER	2015-0028
DRAWING NUMBER	E-206

NOT ISSUED FOR CONSTRUCTION

C:\Users\Julian\Desktop\Chattahoochee Pump Station (11-18-14 revised)\E-206-2015-0028.dwg Sun, 11/23/14 7:53 PM

LIGHT FIXTURE SCHEDULE

TYPE	DESCRIPTION	MANUFACTURER CAT #	LAMP TYPE	WATTS	VOLTAGE
A	Wall molunted fluorescent light fixture	RIG A LITE MHDS-TSHO-4-2-U	54W T5	120	120
B	Chain hung fluorescent light fixture	COLUMBIA LU-4-232-E-U	32WT8	70	120
C					
DB	Pole Mounted triple flood light - pole is 25feet aluminum with natural sanded aluminum finish round tapered with 400WattHPS lamp and 120degrees arm	SPAULDING MVK-4005-H-6X6-208 POLE SPAULDING RTA-25-70-B-TA-NA	400W HPS	400	208
DC	WALL PACK , rugged corrosion resistant, die cast aluminum with electrostaticaflvy applied dark bronze finish	HUBBELL PGM3-30L-U-4K-BZ	LED		120
DD	HARDOUS AREA LIGHTING LED FIXTURE WALL MOUNTED	RIG A LITE SXPJ11-L2-U-G-W-G	LED	98	120
X	DIE-CAST ALUMINUM HOUSING WET LOCATION/IP66 RATED CLEAR POYICARBONATE FACEPLATES. SINGLE DOUBLE OR UNIVERSAL FACEPLATE AS INDICATED RED LETTER INCLUDING EMERGENCY BATTERY PACK	LIGHTALARMS XVE-1 OR 2-R-4X	LED	10	120
XC	CLASS 1, DIV 2 EXIT SIGN	EXITRONIX TYPE X CLASS CPE-E-1 OR 2- C1-WP	LED VLED15	18.7	120
XA	INDUSTRIAL APPLICATION GASKETED EMERGENCY UNIT	EXITRONIX LRX-6-25-B1D-2	LED VLED15	18.7	120
XAC	CLASS 1, DIV 2 EMERGENCY UNIT	RIGALITE XPEL-U-2-2-M	LED VLED15	18.7	120

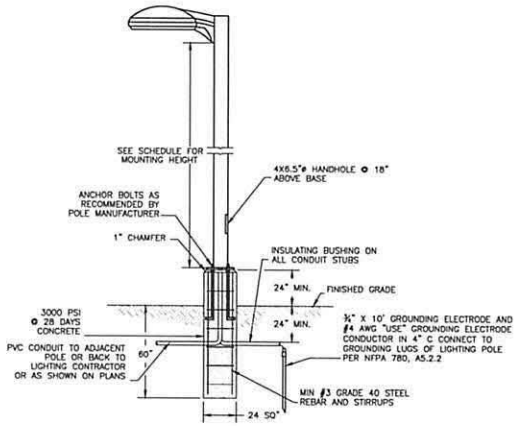

1 / E-207 **POLE MOUNTED FIXTURE DETAIL**
NOT TO SCALE

KEY ENGINEERING GROUP INC.
3539-B WESLEY CHAPEL RD,
DECATUR GA 30034
TEL: (770) 987-7111; FAX: (770) 987-3371

PRIME ENGINEERING INCORPORATED
11 NORTHSIDE PARKWAY NW
SONORTHCREEK, SUITE 200
ATLANTA, GEORGIA 30327
404-425-7100

PROJECT:
CHATTAHOOCHEE III PUMP STATION
JOHNS CREEK, GEORGIA
PREPARED FOR:
FULTON COUNTY DEPARTMENT OF PUBLIC WORKS

REVISIONS

NO.	DATE	DESCRIPTION
A	04-30-13	SUBMITTAL
B	09-06-13	SUBMITTAL
C	12-06-13	SUBMITTAL
D	01-17-14	SUBMITTAL
E	01-22-14	CONSTRUCTION DOCUMENTS

SEAL

© 2013 PRIME ENGINEERING, INC. Scales, as stated hereon, are valid on the original drawing; for dimensions of which are 22 by 34 inches. These scales, which are stated in terms of inches per foot, are valid only when the original drawing is reduced to the ratio of the overall sheet dimensions of the print to corresponding dimensions of the original drawing. This drawing is the property of PRIME ENGINEERING, INCORPORATED and is not to be reproduced or copied in whole or in part. It is only to be used for the project and site specifically identified herein and is not to be used on any other project. It is to be returned upon request.

DRAWING TITLE
PANEL SCHEDULES AND LIGHT FIXTURE SCHEDULES

DRAWN BY	KEY
DESIGNED BY	KEY
CHECKED BY	RRM
DRAWING DATE	04-30-13
DRAWING SCALE	AS SHOWN
PROJECT NUMBER	2015-0028
DRAWING NUMBER	E-207

NOT ISSUED FOR CONSTRUCTION

VALVE AND ACTUATOR SYMBOLS

STANDARD SYMBOLS

N.O. NORMALLY OPEN
N.C. NORMALLY CLOSED

- GATE VALVE
- GLOBE VALVE
- PLUG VALVE
- BALL VALVE
- BUTTERFLY VALVE
- CHECK VALVE
- DOUBLE LEAF CHECK VALVE
- BALL CHECK VALVE
- PINCH VALVE
- ANGLE VALVE
- DIAPHRAGM VALVE
- NEEDLE VALVE
- BALANCING COCK
- KNIFE GATE VALVE
- CIRCUIT BALANCING VALVE
- TELESCOPING VALVE
- RELIEF VALVE
- FLOAT VALVE

STANDARD SYMBOLS

N.O. NORMALLY OPEN
N.C. NORMALLY CLOSED

- THREE-WAY VALVE (W/TYPICAL FAIL POSITION)
- FOUR WAY VALVE (W/TYPICAL FAIL POSITION)
- PRESSURE REGULATING VALVE
- BACK PRESSURE VALVE
- VALVE WITH HAND OPERATOR
- SOLENOID OPERATED VALVE (F.C.= FAIL CLOSED) (F.O.= FAIL OPEN)
- ELECTRICAL MOTOR OPERATED VALVE
- PNEUMATIC OPERATED VALVE SEE SECTION 15180
- ELECTRO-HYDRAULIC OPERATED VALVE
- THERMOSTATICALLY CONTROLLED VALVE
- DAMPER
- MUD VALVE
- GAUGE OR ROOT VALVE

PIPE LINE DEVICE SYMBOLS

STANDARD SYMBOLS

- STRAINER
- REDUCER OR INCREASER
- TRAP
- DRAIN
- STEAM VENT
- FLAME TRAP
- INJECTOR
- SEPARATOR
- FILTER
- CAP OR PLUG
- BLIND FLANGE
- MANUAL AIR VENT
- AUTOMATIC AIR VENT
- ADJUSTABLE WEIR GATE
- SLIDE GATE (NORMALLY OPEN)
- SLIDE GATE (NORMALLY CLOSED)
- FLAP GATE
- UNION
- SEDIMENT TRAP
- CALIBRATION CHAMBER
- PULSATION DAMPENER
- SLUICE GATE (NORMALLY OPEN)
- SLUICE GATE (NORMALLY CLOSED)
- SLIDE GATE (NORMALLY OPEN)
- SLIDE GATE (NORMALLY CLOSED)
- BUBBLER - TYPE LEVEL ELEMENT

PROCESS AND SIGNAL LINE SYMBOLS

- MAIN PROCESS FLOW (WITH TYPICAL DIRECTION OF FLOW SHOWN)
- SECONDARY PROCESS FLOW
- INSTRUMENT SUPPLY, PROCESS TAPS
- PNEUMATIC SIGNAL (ANALOG)
- CAPILLARY TUBE
- ELECTROMAGNETIC OR SONIC SIGNAL (GUIDED)
- ELECTROMAGNETIC OR SONIC SIGNAL (UNGUIDED)
- SOFTWARE OR DATA LINK
- MECHANICAL LINK
- HYDRAULIC
- ELECTRIC SIGNAL (ANALOG OR DISCRETE)
- ES 120 VAC — ELECTRIC POWER SUPPLY
- SA — SERVICE AIR SUPPLY
- IA — INSTRUMENT QUALITY AIR SUPPLY
- 3W — WATER SUPPLY
- ELECTRICAL SIGNAL LINES CONNECTED
- ELECTRICAL SIGNAL LINES NOT CONNECTED

DRAWING CROSS REFERENCE SYMBOLOGY FOR PROCESS AND SIGNAL LINES

LINE CROSS REFERENCE SYMBOL LOCATION IDENTIFICATION LETTERS

FROM — TO
FROM — TO
TO — FROM

TO/FROM SYMBOL EXAMPLES

(DWG P2) P3 (TO) — (DWG P3) P2 (FROM)
DEFINES A LINE CONTINUING FROM DRAWING "P2", TO DRAWING "P3"

(DWG P2) P3 (FROM) — (DWG P3) P2 (TO)
DEFINES A LINE CONTINUING FROM DRAWING "P3", TO DRAWING "P2"

(DWG P3) P6 (FROM) — (DWG P6) P3 (TO)
DEFINES A LINE CONTINUING FROM DRAWING "P6", TO DRAWING "P3"

MISCELLANEOUS MECHANICAL EQUIPMENT SYMBOLS

STANDARD SYMBOLS

- CENTRIFUGAL PUMP
- SUBMERSIBLE PUMP
- VERTICAL PUMP
- POSITIVE DISPLACEMENT PUMP
- ROTARY LOBE PUMP
- PROGRESSING CAVITY PUMP
- BLOWER OR FAN
- COMPRESSOR
- ROTARY LOBE COMPRESSOR
- LIQUID RING BLOWER OR COMPRESSOR
- SILENCER
- INLET AIR FILTER-SILENCER
- GRINDER
- PLATE TYPE HEAT EXCHANGER
- SPIRAL HEAT EXCHANGER
- SHELL AND TUBE TYPE HEAT EXCHANGER
- RAG — RIGHT ANGLE GEAR
- TANK
- WASTE GAS BURNER
- VFD — VARIABLE FREQUENCY DRIVE (ELEC)
- ASD — ADJUSTABLE SPEED DRIVE (MECH)
- GENERATOR
- HORIZONTAL SURFACE MIXER
- SIGHT GLASS
- DIAPHRAGM PUMP
- BOILER
- ENGINE
- MIXER
- METERING PUMP
- ROTARY SCREEN
- WATER HEATER
- PLUNGER PUMP
- M — SUMP PUMP

MECHANICAL EQUIPMENT IDENTIFICATION

THICKENED SLUDGE TRANSFER PUMPS 1,2 } EQUIPMENT NAME
P 1234
P 1235 } EQUIPMENT NUMBERS

SPEC: — SPECIFICATION REFERENCE

FOR EQUIPMENT AND PIPING DESIGNATION SYSTEMS AND ABBREVIATIONS, SEE DRAWING G4.

GRAY

Gay Group Consulting Engineers, Inc.
1827 Powers Ferry Road
Building D5, Suite 100
Atlanta, Georgia 30339
Tel. (770) 955-1443

PRIME ENGINEERING

PROJECT: CHATTAHOOCHEE III PUMP STATION
JOHNS CREEK, GEORGIA
PREPARED FOR: FULTON COUNTY DEPARTMENT OF PUBLIC WORKS

REVISIONS

No.	DATE	DESCRIPTION
B	9/26/2013	60% DESIGN SUBMITTAL
C	12-06-13	90% DESIGN SUBMITTAL
D	01-17-14	100% DESIGN SUBMITTAL
E	11-21-14	VE SUBMITTAL

SEAL: GEORGIA REGISTERED PROFESSIONAL ENGINEER NO. 13677 — JOHN E. ELY — U.S.A.
11-21-14
DATE:

© 2013 PRIME ENGINEERING, INC.
Scales, as stated herein, are valid only for the original drawing; the dimensions of which are 22 by 34 inches. These scales, noted herein, are thereby changed by the ratio of the actual dimensions of the print to corresponding dimensions of the original drawing. This drawing is the property of PRIME ENGINEERING, INC. (PRIME) and is to be used for the project specified or required in a bid or as a part. It is only to be used for the project and site specifically identified herein and is not to be used on any other project. It is to be returned upon request.

DRAWING TITLE: PIPING AND MECHANICAL SYMBOLS

DRAWING DATE	04-30-13
DRAWING SCALE	AS SHOWN
PROJECT NUMBER	2015-0028
DRAWING NUMBER	I-001
DRAWN BY	LRD
DESIGNED BY	AKR
CHECKED BY	AKR

ISSUED FOR CONSTRUCTION

INSTRUMENTATION SYMBOLS

SPECIAL OR INSTRUMENT FUNCTION DESIGNATIONS

STANDARD SYMBOLS

Σ	ALGEBRAIC ADDITION
±, +, −	BIAS
AVG	AVERAGE
×	MULTIPLY
÷	DIVIDE
√	EXTRACT SQUARE ROOT
x^n OR $x^{1/n}$	RAISE TO POWER
f(x)	CHARACTERIZE
1:1	BOOST AND ISOLATE
⊠	HIGHEST VALUE SELECTION
⊡	LOWEST VALUE SELECTION
REV	REVERSE
GAF	GAP ACTION FLOATING
S & H	SAMPLE AND HOLD
SRG	SPLIT-RANGING
E/P,I/P (TYPICAL)	FOR INPUT/OUTPUT CONVERTERS USING FOLLOWING SIGNALS: E – VOLTS H – HYDRAULIC I – CURRENT O – ELECTROMAGNETIC OR SONIC P – PNEUMATIC R – RESISTANCE A – ANALOG D – DIGITAL
% OR P	PROPORTIONAL CONTROL ACTION
∫ OR I	INTEGRAL CONTROL ACTION
d/dt OR D	DERIVATIVE CONTROL ACTION
1 – 0	ON – OFF CONTROL ACTION
Δ 1 – 0	DIFFERENTIAL GAP CONTROL ACTION
1:3, 2:1 (TYPICAL)	GAIN OR ATTENUATE
HA	HAND-AUTO SELECTION
HOA	HAND-OFF-AUTO SELECTION
HOJ	HAND-OFF-JOG SELECTION
HOR	HAND-OFF-REMOTE SELECTION
FSOA	FAST-SLOW-OFF-AUTO SELECTION
LOR	LOCAL-OFF-REMOTE SELECTION
S	START/STOP (MOMENTARY)
LF	LEAD-FOLLOW SELECTION (SEE SCHEMATIC)
FR	FORWARD-REVERSE SELECTION
E-STOP	EMERGENCY STOP PUSHBUTTON
OAC	OPEN-AUTO-CLOSE SELECTION
LF	LEAD-FOLLOW SELECTION
OO	ON-OFF SELECTION (MAINTAINED)

PRIMARY ELEMENT SYMBOLS

- ORIFICE PLATE
- VENTURI OR FLOW TUBE
- AVERAGING PITOT TUBE
- PROPELLER OR TURBINE METER
- MAGNETIC FLOW ELEMENT
- FLUME
- WEIR
- VARIABLE AREA FLOW METER (ROTAMETER)
- RUPTURE DISK
- FLOW STRAIGHTENING VANES
- DIAPHRAGM CHEMICAL SEAL
- ANNULAR CHEMICAL SEAL
- TEMPERATURE WELL
- THERMAL FLOW ELEMENT
- SONIC FLOW ELEMENT
- AIR FLOW METER

FUNCTION IDENTIFICATION

FIRST LETTER(S): MEASURED OR INITIATING VARIABLE	FIRST LETTER(S): MODIFIER	SUCCEEDING LETTERS: READOUT OR PASSIVE FUNCTION	SUCCEEDING LETTERS: OUTPUT FUNCTION	SUCCEEDING LETTERS: MODIFIER
A ANALYSIS		ALARM		
B BURNER (FLAME)			CONTROL	
C CONDUCTIVITY				
D DENSITY	DIFFERENTIAL			
E POTENTIAL (ELEC)		PRIMARY ELEMENT		
F FLOW RATE	RATIO			
G FIRE, SMOKE		GLASS		
H HAND				HIGH
I CURRENT (ELEC)		INDICATE		
J POWER	SCAN			
K TIME	TIME RATE CHANGE		CONTROL STATION	
L LEVEL		PILOT LIGHT		LOW MIDDLE
M MOISTURE	MOMENTARY			
N EQUIPMENT STATUS				
O DISSOLVED OXYGEN		ORIFICE TEST CONNECTION		
P PRESSURE				
Q QUANTITY	INTEGRATE			
R RADIATION		RECORD		
S SPEED, FREQUENCY	SAFETY		SWITCH TRANSMIT	
T TEMPERATURE				
U MULTIVARIABLE		MULTIFUNCTION	MULTIFUNCTION VALVE, DAMPER	MULTIFUNCTION
V VIBRATION				
W WEIGHT, FORCE		WELL SECONDARY ELEMENT		
X UNCLASSIFIED				
Y EVENT, STATUS			RELAY, COMPUTE MISC. ACTUATOR	
Z POSITION				

MISCELLANEOUS

STANDARD SYMBOLS

- PURGE OR FLUSHING DEVICE
- RESET FOR LATCH-TYPE OPERATOR
- QUICK-CONNECT FITTING
- 3-WAY PNEUMATIC PILOT VALVE
- PISTON OPERATOR W/SOLENOID PILOT
- BUBBLER PANEL
- SEAL WATER CONTROL UNIT
- CHEMICAL FEED CONTROL UNIT

INSTRUMENT LOOP IDENTIFICATION

XX NNN
- LOOP NUMBER
- MEASURED OR INITIATING VARIABLE LETTER WITH OPTIONAL MODIFIER (SEE FUNCTION IDENTIFICATION TABLE)

INSTRUMENT TAG NUMBERS

YYY NNN Z
- OPTIONAL SUFFIX
- LOOP NUMBER
- PASSIVE AND/OR OUTPUT FUNCTION LETTERS WITH OPTIONAL MODIFIER (SEE FUNCTION IDENTIFICATION TABLE)

INSTRUMENT SIGNAL NUMBERS

NNN ZZ
- OPTIONAL SUFFIX
  - PV = PROCESS VARIABLE
  - SP = SET POINT
  - ZZ = CONTROLLER OUTPUT
- LOOP NUMBER

INSTRUMENT SYMBOLS

- DISCRETE INSTRUMENT
- MULTIFUNCTION INSTRUMENT WITH SHARED HARDWARE (USED FOR "DISTRIBUTED CONTROL SYSTEMS")
- COMPUTER FUNCTION
- FACE MOUNTED ON MAIN PANEL OPERATOR ACCESSIBLE
- MOUNTED ON/IN MAIN PANEL OPERATOR INACCESSIBLE
- FACE MOUNTED ON FIELD PANEL OPERATOR ACCESSIBLE
- MOUNTED ON/IN FIELD PANEL OPERATOR INACCESSIBLE

NOTE: ANY OF THE ABOVE SYMBOLS MAY BE SHOWN WITH HORIZONTAL BAR(S) TO INDICATE PANEL MOUNTING AND/OR OPERATOR ACCESSIBLE

CONTROL FUNCTION SYMBOLS

- INTERLOCKING OR SEQUENTIAL CONTROL FUNCTION (USED TO INDICATE INTERFACE WITH CONTROL LOGIC DIAGRAMS)
- PROGRAMMABLE LOGIC CONTROL

PLC INPUT/OUTPUT SYMBOLS

- DISCRETE INPUT
- DISCRETE OUTPUT
- ANALOG INPUT
- ANALOG OUTPUT

GRAY Bay Group Consulting Engineers, Inc.
1897 Powers Ferry Road
Building 25, Suite 100
Atlanta, Georgia 30339
Tel. (770) 955-1442

PRIME ENGINEERING

PROJECT: CHATTAHOOCHEE III PUMP STATION
JOHNS CREEK, GEORGIA
PREPARED FOR: FULTON COUNTY DEPARTMENT OF PUBLIC WORKS

REVISIONS

No.	DATE	DESCRIPTION
B	9/6/2013	95% DESIGN SUBMITTAL
C	12-06-13	90% DESIGN SUBMITTAL
D	01-17-14	100% DESIGN SUBMITTAL
E	11-21-14	VE SUBMITTAL

SEAL: GEORGIA REGISTERED PROFESSIONAL ENGINEER NO. 13077 — DAVID E. ELY — 11-21-14

© 2013 PRIME ENGINEERING, INC. Scales, as noted hereon, are valid on the original drawing; the dimensions of which are 22 by 34 inches. These scales, noted hereon, are thereby changed by the reduction of the original drawing to that of this print to corresponding dimensions of the original drawing. This drawing is the property of PRIME ENGINEERING, INC. (PRIME) and is not to be reproduced or copied in a whole or in part. It is only to be used for the project and site specifically identified herein and is not to be used on any other project. It is to be returned upon request.

DRAWING TITLE: SYMBOLS AND IDENTIFICATION SYSTEMS

DRAWING DATE	04-30-13
DRAWN BY	LRD
DRAWING SCALE	AS SHOWN
DESIGNED BY	ARR
PROJECT NUMBER	2015-0028
CHECKED BY	ARR
DRAWING NUMBER	I-002

ISSUED FOR CONSTRUCTION