FULTON COUNTY

INVITATION TO BID #16ITB090716K-EC

LITTLE RIVER WRF EXPANSION

FOR

DEPARTMENT OF PUBLIC WORKS

BID ISSUANCE DATE: SEPTEMBER 16, 2016
BID DUE DATE AND TIME: DECEMBER 12, 2016 at 11:00 A.M.
PRE-BID CONFERENCE DATE: OCTOBER 17, 2016 at 9:00 A.M.
PURCHASING CONTACT: ELSA D. CASTRO at 404-612-1708
E-MAIL: Elsa.Castro@fultoncountyga.gov

LOCATION: FULTON COUNTY DEPARTMENT OF PURCHASING
130 PEACHTREE STREET, S.W., SUITE 1168
ATLANTA, GA 30303

TABLE OF CONTENTS

VOLUME I

Invitation to Bid

Owner - Contractor Agreement

Section 1 - Instructions to Bidders
1. Contract Documents
2. Bid Preparation
3. Receipt and Opening of Bids
4. Addenda and Interpretations
5. Site Examination
6. Bidder's Modification and Withdrawal of Bids
7. Bid and Contract Security
8. Surety Bonds
9. Insurance Requirements
10. Right to Reject Bids
11. Applicable Laws
12. Examination of Contract Documents
13. Bid Evaluation
14. Award Criteria
15. Disqualification of Bidders
16. Basis of Award
17. Professional Licenses
18. Wage Clause
19. Notice of Award of Contract
20. Execution of Contract Documents
21. Equal Employment Opportunity (EEO) in Purchasing and Contract Compliance
22. Joint Venture
23. Contractors Compliance with Procurement
24. Georgia Security and Immigration Compliance Act
25. Subcontracting Opportunities
26. Term of Contract
27. No Contact Provision
28. Authorization to Transact Business
29. Pre-Construction Conference
30. Substitutions
31. Right to Protest
32. Bid General Conditions
33. Submittals

Section 2
Bid Form

Section 3
Bond Forms

Section 4
Insurance and Risk Management Provisions

Section 5
Purchasing Forms

TABLE OF CONTENTS

Form A - Non-Collusion Affidavit of Prime Bidder
Form B - Certificate of Acceptance of Request for Bid Requirements
Form C - Georgia Professional License Certification *(not applicable*)
Form D – Certification Regarding Debarment
Form E – Disclosure Form and Questionnaire
Form F – Georgia Security and Immigration Contractor Affidavit and Agreement
Form G – Georgia Security and Immigration Subcontractor Affidavit

Section 6
Contract Compliance Requirements

Non-Discrimination in Contracting and Procurement
Required Forms and EBO Plan:
Exhibit A – Promise of Non-Discrimination
Exhibit B – Employment Report
Exhibit C – Schedule of Intended Subcontractor Utilization
Exhibit D – Letter of Intent to Perform As a Subcontractor or Provide Materials or Services
Exhibit E – Prime Contractor/Subcontractor Utilization Report
Equal Business Opportunity Plan (EBO Plan)

VOLUME II

Section 7
Scope of Work and Technical Specifications

Section 8
General Conditions

Section 9
Special Conditions

VOLUME III

Section 10
Exhibits

VOLUME II

SECTION 7

SCOPE OF WORK AND TECHNICAL SPECIFICATIONS

1.0 GENERAL

The work covered under this contract will be performed at the site located as specified in Section 01006 and will consist of the construction of a new 2.6-mgd (on a maximum month basis) MBR wastewater treatment plant (Little River Water Reclamation Facility) and items ancillary thereto.

2.0 DESCRIPTION OF OWNER'S PROJECT

The work for this project shall include, but not be limited to, furnishing all labor, material, incidentals, supervision and equipment to perform site work, construct structures, install piping, perform yard work, provide erosion and sedimentation control, install, test and startup equipment, install, test and startup HVAC, install plumbing, install, test and startup electrical and install, test and startup instrumentation in accordance with the Contract Documents to provide a complete and operating facility meeting the required performance guarantees.

The Little River Water Reclamation Facility shall be constructed as specified and as shown on the plans and includes, but is not limited to, influent piping, influent pumping, preliminary treatment including screening and grit removal, modification to existing basins to provide secondary treatment using biological treatment basins, Membrane Bio-reactors (MBRs), ultraviolet light disinfection, plant and reuse water pumping, , and effluent gravity sewer piping. Also included is all associated civil, structural, mechanical, electrical, and instrumentation work necessary to meet the requirements of the project specifications and drawings. The contractor is to coordinate with any utility provider for the installation of any utility necessary to complete the work.

Demolition of existing facilities and site restoration is also included as identified in the project specifications and Drawings.

3.0 QUANTITIES AND SCOPE OF WORK

The Owner reserves the right to alter the quantities and scope of work to be performed at any time when and as found necessary. The Contractor shall perform the work as altered, increased or decreased. Payment for such increased or decreased quantities and scope shall be made in accordance with contract documents. No allowance will be made for any change in anticipated profits nor shall such changes be considered as waiving or invalidating any conditions or provisions of the Contract or Bonds.

4.0 CONTRACTS

The Owner shall award the contract for this Work to a single prime contractor. The contractor shall be solely responsible for the timely completion of the work and successful startup of the facility.

SECTION 01006

PROJECT LOCATION AND SITE ACCESS

1.0 PROJECT LOCATION

The work specified in this project shall be performed at the Little River WRF. The plant is located in southeastern Cherokee County at 2415 Cox Road, Woodstock, Georgia 30605.

2.0 SITE ACCESS

Access to the site shall be via the existing plant entrance road located off Cox Road. Contractor shall be aware that the entrance road will be utilized by other plant personnel and the public during the duration of this contract.

The Contractor's personnel will be required to park personal vehicles in the approved or designated areas.

The construction site shall be secured requiring check in by all individuals entering the location. The site shall be secured at the end of the every construction workday per Owner's instructions.

3.0 PROTECTION OF WORK, PROPERTY AND PERSONS

The Contractor shall be responsible for the care of all Work until its completion and final acceptance; and the Contractor shall, at its own expense, replace damaged or lost material and repair damaged parts of the Work, or the same may be done by the Owner, and the Contractor and its sureties shall be liable therefore. The Contractor shall make its own provisions for properly storing and protecting all material and equipment against theft, injury, or damage from any and all causes. Damaged material and equipment shall not be used in the Work. The Contractor shall take all risks from floods and casualties or for delays from such causes. The Contractor may, however, be allowed a reasonable extension of time on account of such delays, subject to the conditions herein before specified. The Contractor shall remove from the vicinity of the completed Work all plant, buildings, rubbish, unused material, concrete forms, sheeting or equipment belonging to the Contractor or used under its discretion during construction; and in the event of the Contractor's failure to do so, the same may be removed by the Owner at the expense of the Contractor, and the Contractor and its sureties shall be liable therefore.

The Contractor shall adopt all practical means to minimize interference to traffic and inconvenience, discomfort, or damage. The Contractor shall protect against damage, any piling, duct or structures crossing trenching or encountered in the Work and shall be responsible for any damage done to such structures, or damage therefrom. The Contractor shall support or replace any such structures without delay and without any additional compensation, to the entire satisfaction of the Owner. The Contractor shall be responsible for all damage to persons and property directly or indirectly caused by its operations, and under all circumstances the Contractor shall comply with the regulations of the Owner, and the laws and regulations of the State of Georgia, relative to safety of

persons and property and the interruption of traffic and the convenience of the public within the respective jurisdiction, and the Contractor shall be solely responsible for any damages caused by failure to provide proper safety.

The Contractor will be held responsible for and be required to make restitution, at its own expense, for all damage to persons or property caused by the Contractor or subcontractor, or the agents, or employees of either during the progress of the Work and until its final acceptance.

4.0 TEMPORARY FENCES

Except as otherwise provided, the Contractor shall enclose the site of the Work with a fence adequate to protect the Work and temporary facilities against acts of theft, violence, or vandalism.

In the event all or a part of the site is to be permanently fenced, this permanent fence or a portion thereof may be built to serve for protection of the Work site, provided however, that any portions damaged or defaced shall be replaced prior to final acceptance.

Temporary openings in existing fences shall be protected to prevent intrusion by unauthorized persons. During night hours, weekends, holidays, and other times when no Work is performed at the site, the Contractor shall provide temporary closures or guard service to protect such openings. Temporary openings shall be fenced when no longer necessary.

5.0 FIRE EXTINGUISHER

Sufficient number of fire extinguishers of the type and capacity required to protect the Work and ancillary facilities, shall be provided and maintained by the Contractor in readily accessible locations.

END OF SECTION

SECTION 01010

SUMMARY OF WORK

1.0 GENERAL

The work covered under this contract will be performed at the site located as specified in Section 01006 and will consist of the construction of a new 2.6-mgd (on a maximum month basis) MBR wastewater treatment plant (Little River Water Reclamation Facility Expansion) and items ancillary thereto.

2.0 DESCRIPTION OF OWNER'S PROJECT

The work for this project shall include, but not be limited to, furnishing all labor, material, incidentals, supervision and equipment to perform site work, construct structures, install piping, perform yard work, provide erosion and sedimentation control, install, test and startup equipment, install, test and startup HVAC, install plumbing, install, test and startup electrical and install, test and startup instrumentation in accordance with the Contract Documents to provide a complete and operating facility meeting the required performance guarantees.

The Little River Water Reclamation Facility Expansion shall be constructed as specified and as shown on the plans and includes, but is not limited to, influent piping, influent pumping, preliminary treatment including screening and grit removal, modification to existing basins to provide secondary treatment using biological treatment basins, Membrane Bio-reactors (MBRs), ultraviolet light disinfection, plant and reuse water pumping, , and effluent gravity sewer piping. Also included is all associated civil, structural, mechanical, electrical, and instrumentation work necessary to meet the requirements of the project specifications and drawings. The contractor is to coordinate with any utility provider for the installation of any utility necessary to complete the work.

Demolition of existing facilities and site restoration is also included as identified in the project specifications and Drawings.

3.0 QUANTITIES AND SCOPE OF WORK

The Owner reserves the right to alter the quantities and scope of work to be performed at any time when and as found necessary. The Contractor shall perform the work as altered, increased or decreased. Payment for such increased or decreased quantities and scope shall be made in accordance with contract documents. No allowance will be made for any change in anticipated profits nor shall such changes be considered as waiving or invalidating any conditions or provisions of the Contract or Bonds.

4.0 CONTRACTS

The Owner shall award the contract for this Work to a single prime contractor. The contractor shall be solely responsible for the timely completion of the work and successful startup of the facility.

END OF SECTION

SECTION 01014

WORK SEQUENCE

1.0 CONTINUITY OF PLANT OPERATIONS

A. GENERAL:

The existing wastewater treatment plant is currently and continuously receiving and treating sewage, and those functions shall not be interrupted except as specified herein. The Contractor shall coordinate the work to avoid any interference with normal operation of plant equipment and processes.

B. BYPASSING:

Bypassing of untreated or partially treated sewage to surface waters or drainage courses is prohibited during construction. In the event accidental bypassing is caused by the Contractor's operations, the Owner shall immediately be entitled to employ others to stop the bypassing without giving written notice to the Contractor.

Penalties imposed on the Owner as a result of any bypass caused by the actions of the Contractor, his employees, or subcontractors, shall be borne in full by the Contractor, including legal fees and other expenses to the Owner resulting directly or indirectly from the bypass.

C. SUBMITTAL:

In accordance with Section 01300, the Contractor shall submit a construction sequencing plan and detailed outage plan and time schedule for operations which will make it necessary to remove a tank, pipeline, channel, electrical circuit, equipment, or structure from service. The schedule shall be coordinated with the construction schedule specified and shall meet the restrictions and conditions specified in this section. The detailed plan shall describe the Contractor's method for preventing bypassing of treatment units, the length of time required to complete said operation, the necessary plant, and equipment which the Contractor shall provide in order to prevent bypassing of associated treatment units.

The Contractor shall observe the following restrictions:

Systems or individual equipment items shall be isolated, dewatered, decommissioned, de-energized, or depressurized in accordance with the detailed outage plan and schedule. The Construction Manager shall be notified in writing at least 15 calendar days in advance of the planned operation.

2.0 SEQUENCE AND OF CONSTRUCTION

The Contractor shall prepare a detailed sequence of construction plan and submit it for review and approval. The following sequence of construction is one approach that could be used by the contractor to facilitate continuous treatment of wastewater and compliance with effluent quality requirements during construction.

1. Provide construction of new treatment building including headworks, membrane building administration building, membrane pump station etc. Route drains / utilities to maintain operation of existing facilities.

2. Energize and provide complete check out of all new systems.

3. The items above can be completed without interfering with current plant operation.

4. Tie in one of the two existing biological trains to the membrane pump station.

5. Connect influent line RAS piping to allow one biological train to operate with new facility

6. Complete work in the offline biological train. This work may need to take place during a low flow period.

7. Switch over and Divert flow the retrofitted biological train, and complete work on the other side.

8. Complete demolition work at existing basins and buildings.

9. Final Sitework.

The final work sequence acceptability shall be at the discretion of the OWNER.

END OF SECTION

‘

SECTION 01015

CONTRACTOR'S USE OF PREMISES

PART 1—GENERAL

The Owner's operating personnel will be responsible for operating the existing treatment plant throughout the execution of this contract. Equipment presently installed in the treatment plant must be available to plant personnel at all times for use, maintenance, and repair. If it is necessary in the course of operating the plant, for the Contractor to move his equipment, materials, or any material included in the work, he shall do so promptly and place that equipment or material in an area which does not interfere with the plant operation. The Contractor shall not adjust or operate serviceable or functioning equipment or systems except as specifically required by this contract.

The current treatment plant must remain in operation continuously throughout the execution of the resulting contract. The Contractor shall schedule and conduct his work to minimize necessary shutdowns of system components and interference with normal operations and maintenance.

The Contractor shall notify the Owner and the Engineer, in accordance with Section 01014, fifteen (15) calendar days in advance of the time it is necessary to take out of service any existing pipeline, channel, electrical circuit, equipment or structure. The Owner’s operating personnel will be responsible for operating any existing valves with prior notification and planning per Section 01014. Any unnecessary additional cost to operations due to the contractor’s poor workmanship or planning (repeat shut-downs or testing for example) shall be the responsibility of the Contractor.

The Contractor shall be responsible for providing whatever temporary piping, pumping, power, and control facilities as are required to maintain continuous operation except as otherwise specified. The integrity of the existing facility utilities shall be maintained by the Contractor at all times.

The Contractor’s work force shall not use the Owner’s existing facilities, including telephones and power, or other facilities. The Contractor shall provide all such facilities for the use of his personnel as specified in Section 01500.

The Contractor is responsible for security of their equipment and materials to be incorporated into the work.

Any spill or disruption to the current operation of the plant caused by the Contractor shall be the financial responsibility of the Contractor.

The Contractor shall be responsible for any repair or replacement if damage to existing equipment or structures not slated for removal is caused by the Contractor.

END OF SECTION

SECTION 01046

DEMOLITION AND SALVAGE

PART 1—GENERAL

1.1 RELATED DOCUMENTS

Drawings and general provisions of the Contract, including General and Supplementary Conditions and other Division 01 Specification Sections, apply to this Section.

1.2 SUMMARY

This Section includes the following:

1. Demolition and removal of selected portions of building or structure.

2. Demolition and removal of selected site elements.

3. Salvage of existing items to be reused or recycled.

Related Sections include the following:

1. Division 01 Section "Summary" for use of premises and Owner-occupancy requirements.

2. Division 01 Section "Photographic Documentation" for preconstruction photographs taken before selective demolition operations.

3. Division 01 Section "Temporary Facilities and Controls" for temporary construction and environmental-protection measures for selective demolition operations.

4. Division 01 Section "Cutting and Patching" for cutting and patching procedures.

5. Division 01 Section "Construction Waste Management and Disposal" for disposal of demolished materials.

6. Division 02 Section "Structure Demolition" for demolition of entire buildings, structures, and site improvements.

7. Division 02 Section "Site Clearing" for site clearing and removal of above- and below-grade improvements.

1.3 DEFINITIONS

1. Remove: Detach items from existing construction and legally dispose of them off-site, unless indicated to be removed and salvaged or removed and reinstalled.

2. Remove and Salvage: Detach items from existing construction and deliver them to Owner.

3. Remove and Reinstall: Detach items from existing construction, prepare them for reuse, and reinstall them where indicated.

4. Existing to Remain: Existing items of construction that are not to be removed and that are not otherwise indicated to be removed, removed and salvaged, or removed and reinstalled.

1.4 MATERIALS OWNERSHIP

Historic items, relics, and similar objects including, but not limited to, cornerstones and their contents, commemorative plaques and tablets, antiques, and other items of interest or value to Owner that may be encountered during selective demolition remain Owner's property. Carefully remove and salvage each item or object in a manner to prevent damage and deliver promptly to Owner.

1.5 SUBMITTALS

A. QUALIFICATION DATA:

For demolition company

B. SCHEDULE OF SELECTIVE DEMOLITION ACTIVITIES:

Indicate the following:

1. Detailed sequence of selective demolition and removal work, with starting and ending dates for each activity. Ensure Owner's on-site operations are uninterrupted.

2. Interruption of utility services. Indicate how long utility services will be interrupted.

3. Coordination for shutoff, capping, and continuation of utility services.

4. Use of elevator and stairs.

5. Coordination of Owner's continuing occupancy of portions of existing building and of Owner's partial occupancy of completed Work.

6. Means of protection for items to remain and items in path of waste removal from building.

C. INVENTORY:

After selective demolition is complete, submit a list of items that have been removed and salvaged.

D. PREDEMOLITION PHOTOGRAPHS:

Show existing conditions of adjoining construction and site improvements, including finish surfaces that might be misconstrued as damage caused by selective demolition operations. Comply with Division 01 Section "Photographic Documentation." Submit before Work begins.

E. LANDFILL RECORDS:

Indicate receipt and acceptance of any waste / hazardous wastes by a landfill facility licensed to accept hazardous wastes.

1.6 QUALITY ASSURANCE

A. DEMOLITION FIRM QUALIFICATIONS:

An experienced firm that has specialized in demolition work similar in material and extent to that indicated for this Project.

B. REFRIGERANT RECOVERY TECHNICIAN QUALIFICATIONS:

Certified by an EPA-approved certification program.

C. REGULATORY REQUIREMENTS:

Comply with governing EPA notification regulations before beginning selective demolition. Comply with hauling and disposal regulations of authorities having jurisdiction.

D. STANDARDS:

Comply with ANSI A10.6 and NFPA 241.

E. PREDEMOLITION CONFERENCE:

Conduct conference at Project site to comply with requirements in Division 01 Section "Project Management and Coordination."

F. PREDEMOLITION CONFERENCE:

Conduct conference at Project site to comply with requirements in Division 01 Section “Work Sequence”. Review methods and procedures related to selective demolition including, but not limited to, the following:

1. Inspect and discuss condition of construction to be selectively demolished.

2. Review structural load limitations of existing structure.

3. Review and finalize selective demolition schedule and verify availability of materials, demolition personnel, equipment, and facilities needed to make progress and avoid delays.

4. Review requirements of work performed by other trades that rely on substrates exposed by selective demolition operations.

5. Review areas where existing construction is to remain and requires protection.

1.7 PROJECT CONDITIONS

Owner will occupy portions of building immediately adjacent to selective demolition area. Conduct selective demolition so Owner's operations will not be disrupted. Additionally, during demolition notice shall be given to all adjoining properties. Owner may request a demolition plan that demonstrated no disruption to Owner and neighboring communities. This shall include a noise abatement program.

Conditions existing at time of inspection for bidding purpose will be maintained by Owner as far as practical.

Notify Architect of discrepancies between existing conditions and Drawings before proceeding with selective demolition.

There will be demolition work required on this project. Electrical Contractor shall coordinate with the General Contractor to de-energize the necessary equipment as needed. Abandoned conduits that are stubbed up through existing concrete structures that will cause a tripping hazard will be required to be cut and capped flush to the finished floor surface. Removing or plugging of abandoned conduits will be required for other areas. All power and control wiring for abandoned equipment shall be removed. Abandoned motor control equipment, breakers and terminals will be marked appropriately to reflect spare availability.

Unless otherwise shown on the Drawings, specified or directed, the Contractor shall dispose of all surplus excavated materials and materials and equipment from demolition, legally off the site, and shall provide his own suitable, off-site spoil area, or on a site designated by the Owner.

Include in the demolition plan the methods used to control the disruption of utilities, maintain current treatment operations, mitigate noise pollution, and manage traffic to and from the site.

A. HAZARDOUS MATERIALS:

It is not expected that hazardous materials will be encountered in the Work.

1. If materials suspected of containing hazardous materials are encountered, do not disturb; immediately notify Engineer and Owner. Contractor will remove any hazardous materials encountered under a separate allowance.

B. UTILITY SERVICE:

Maintain existing utilities indicated to remain in service and protect them against damage during selective demolition operations.

1. Maintain fire-protection facilities in service during selective demolition operations.

PART 2—PRODUCTS (NOT USED)

PART 3—EXECUTION

3.1 EXAMINATION

Verify that utilities have been disconnected and capped.

Survey existing conditions and correlate with requirements indicated to determine extent of selective demolition required.

Inventory and record the condition of items to be removed and reinstalled and items to be removed and salvaged.

When unanticipated mechanical, electrical, or structural elements that conflict with intended function or design are encountered, investigate and measure the nature and extent of conflict. Promptly submit a written report to Architect.

Engage a professional engineer to survey condition of building to determine whether removing any element might result in structural deficiency or unplanned collapse of any portion of structure or adjacent structures during selective demolition operations.

A. SURVEY OF EXISTING CONDITIONS:

Record existing conditions by use of preconstruction photographs.

1. Comply with requirements specified in Division 01 Section "Photographic Documentation."

2. Before selective demolition or removal of existing building elements that will be reproduced or duplicated in final Work, make permanent record of measurements, materials, and construction details required to make exact reproduction.

Perform surveys as the Work progresses to detect hazards resulting from selective demolition activities.

3.2 UTILITY SERVICES AND MECHANICAL/ELECTRICAL SYSTEMS

A. EXISTING SERVICES/SYSTEMS:

Maintain services/systems indicated to remain and protect them against damage during selective demolition operations.

1. Comply with requirements for existing services/systems interruptions specified in Division 01 Section "Summary."

B. SERVICE/SYSTEM REQUIREMENTS:

Locate, identify, disconnect, and seal or cap off indicated utility services and mechanical/electrical systems serving areas to be selectively demolished.

1. Owner will arrange to shut off indicated services/systems when requested by Contractor.

2. Arrange to shut off indicated utilities with utility companies.

3. If services/systems are required to be removed, relocated, or abandoned, before proceeding with selective demolition provide temporary services/systems that bypass area of selective demolition and that maintain continuity of services/systems to other parts of building.

4. Cut off pipe or conduit in walls or partitions to be removed. Cap, valve, or plug and seal remaining portion of pipe or conduit after bypassing.

5. Where entire wall is to be removed, existing services/systems may be removed with removal of the wall.

C. ELECTRICAL DEMOLITION:

1. Electrical removals shall consist of the removal of existing transformers, distribution switchboards, control panels, motors, conduits and wires, poles and overhead wiring, panelboards, lighting fixtures and miscellaneous electrical equipment all as shown on the Drawings, specified herein, or required to perform the work.

2. All existing electrical equipment and fixtures to be removed shall be removed with such care as may be required to prevent unnecessary damage, to keep existing systems in operation and to maintain the integrity of the grounding systems.

3. All conduits and wires shall be removed and disposed of offsite. All wiring in underground ducts shall be removed. All direct burial cable shall be removed.

4. Poles and overhead wiring within the limits of demolition shall be abandoned as shown. Poles shall be completed removed from the site.

5. All lighting fixtures shall be removed from the site. Florescent bulbs shall be removed and disposed offsite in accordance with environmental regulations.

6. Wall switches, receptacles, starters and other miscellaneous electrical equipment shall be removed and disposed of off the site as required

3.3 PREPARATION

A. SITE ACCESS AND TEMPORARY CONTROLS:

Conduct selective demolition and debris-removal operations to ensure minimum interference with roads, streets, walks, walkways, and other adjacent occupied and used facilities.

1. Comply with requirements for access and protection specified in Division 01 Section "Temporary Facilities and Controls."

B. TEMPORARY FACILITIES:

Provide temporary barricades and other protection required to prevent injury to people and damage to adjacent buildings and facilities to remain.

C. TEMPORARY SHORING:

Provide and maintain shoring, bracing, and structural supports as required to preserve stability and prevent movement, settlement, or collapse of construction and finishes to remain, and to prevent unexpected or uncontrolled movement or collapse of construction being demolished.

1. Strengthen or add new supports when required during progress of selective demolition.

3.4 SELECTIVE DEMOLITION, GENERAL

A. GENERAL:

Demolish and remove existing construction only to the extent required by new construction and as indicated. Use methods required to complete the Work within limitations of governing regulations and as follows:

1. Proceed with selective demolition systematically, from higher to lower level. Complete selective demolition operations above each floor or tier before disturbing supporting members on the next lower level.

2. Neatly cut openings and holes plumb, square, and true to dimensions required. Use cutting methods least likely to damage construction to remain or adjoining construction. Use hand tools or small power tools designed for

sawing or grinding, not hammering and chopping, to minimize disturbance of adjacent surfaces. Temporarily cover openings to remain.

3. Cut or drill from the exposed or finished side into concealed surfaces to avoid marring existing finished surfaces.

4. Do not use cutting torches until work area is cleared of flammable materials. At concealed spaces, such as duct and pipe interiors, verify condition and contents of hidden space before starting flame-cutting operations. Maintain portable fire-suppression devices during flame-cutting operations.

5. Maintain adequate ventilation when using cutting torches.

6. Remove decayed, vermin-infested, or otherwise dangerous or unsuitable materials and promptly dispose of off-site.

7. Remove structural framing members and lower to ground by method suitable to avoid free fall and to prevent ground impact or dust generation.

8. Locate selective demolition equipment and remove debris and materials so as not to impose excessive loads on supporting walls, floors, or framing.

9. Dispose of demolished items and materials promptly.

B. REMOVED AND SALVAGED ITEMS:

1. Clean salvaged items.

2. Pack or crate items after cleaning. Identify contents of containers.

3. Store items in a secure area until delivery to Owner.

4. Transport items to Owner's storage area designated by Owner.

5. Protect items from damage during transport and storage.

C. REMOVED AND REINSTALLED ITEMS:

1. Clean and repair items to functional condition adequate for intended reuse. Paint equipment to match new equipment.

2. Pack or crate items after cleaning and repairing. Identify contents of containers.

3. Protect items from damage during transport and storage.

4. Reinstall items in locations indicated. Comply with installation requirements for new materials and equipment. Provide connections, supports, and miscellaneous materials necessary to make item functional for use indicated.

D. EXISTING ITEMS TO REMAIN:

Protect construction indicated to remain against damage and soiling during selective demolition. When permitted by Architect, items may be removed to a suitable, protected storage location during selective demolition and reinstalled in their original locations after selective demolition operations are complete.

3.5 SELECTIVE DEMOLITION PROCEDURES FOR SPECIFIC MATERIALS

A. CONCRETE:

1. Demolish in sections. Cut concrete full depth at junctures with construction to remain and at regular intervals, using power-driven saw, then remove concrete between saw cuts.

B. MASONRY:

Demolish in small sections. Cut masonry at junctures with construction to remain, using power-driven saw, then remove masonry between saw cuts.

C. CONCRETE SLABS-ON-GRADE:

Saw-cut perimeter of area to be demolished, then break up and remove.

D. RESILIENT FLOOR COVERINGS:

Remove floor coverings and adhesive according to recommendations in RFCI-WP and its Addendum.

1. Remove residual adhesive and prepare substrate for new floor coverings by one of the methods recommended by RFCI.

E. AIR-CONDITIONING EQUIPMENT:

Remove equipment without releasing refrigerants.

3.6 DISPOSAL OF DEMOLISHED MATERIALS

A. GENERAL:

Except for items or materials indicated to be recycled, reused, salvaged, reinstalled, or otherwise indicated to remain Owner's property, remove demolished materials from Project site and legally dispose of them in an EPA-approved landfill.

1. Do not allow demolished materials to accumulate on-site.

2. Remove and transport debris in a manner that will prevent spillage on adjacent surfaces and areas.

3. Remove debris from elevated portions of building by chute, hoist, or other device that will convey debris to grade level in a controlled descent.

4. Comply with requirements specified in Division 01 Section "Construction Waste Management and Disposal."

B. BURNING:

1. Do not burn demolished materials.

C. DISPOSAL:

1. Transport demolished materials off Owner's property and legally dispose of them.

3.7 CLEANING

Clean adjacent structures and improvements of dust, dirt, and debris caused by selective demolition operations. Return adjacent areas to condition existing before selective demolition operations began.

3.8 SELECTIVE DEMOLITION SCHEDULE

Refer to demolition drawings for facilities to be demolished.

END OF SECTION

SECTION 01060

SAFETY AND HEALTH

PART 1—GENERAL

The Contractor shall take all necessary precautions and provide all necessary safeguards to prevent personal injury and property damage. Protection shall be provided for all persons, including but not limited to, his employees, employees of other contractors or subcontractors, members of the general public, Owner's employees, Engineer's employees, and regulatory agencies' personnel that may be on or about the work. The Contractor shall also provide protection for all public and private property including, but not limited to, utilities, pipes, equipment, motor vehicles, and structures.

Portions of the existing plant are exposed to wastewaters of varying degrees of treatment. The Contractor shall be experienced and qualified to anticipate and meet the safety and health requirements of this project.

Workmen involved in the removal, renovation, or installation of equipment within the treatment plant may be exposed to disease-producing organisms in wastewater. The Contractor shall require his personnel to observe proper hygienic precautions.

Solvents, gasoline, and other hazardous materials enter the plant with incoming sewage, and, therefore, certain areas are hazardous to open flame, sparks, or unventilated occupancy. The Contractor shall take measures to assure his personnel observe proper safety precautions when working in these areas.

PART 2—SAFETY AND HEALTH REGULATIONS

The Contractor shall comply with Safety and Health Regulations for Construction, promulgated by the Secretary of Labor under Section 107 of the Contract Work Hours and Safety Standards Act, as set forth in Title 29, C.F.R. Copies of these regulations may be obtained from Labor Building, 14th and Constitution Avenue N.W., Washington, DC 20013 http://www.osha.gov/pls/oshaweb/owasrch.search_form?p_doc_type=standards&p_toc_level=0

The Contractor shall also comply with the provisions of the Federal Occupational Safety and Health Act, as amended, and the Fulton and Cherokee County regulations and the provisions set forth in the General Conditions.

For areas under access by contract operations due to operations requirements, safety r equirements are to be no less strict than those required by operations staff.

PART 3—EXECUTION

3.0 CONTRACTOR'S SAFETY REPRESENTATIVE

The Contractor shall designate a trained and qualified employee who is to be responsible for ensuring that the work is performed safely and in conformance with all applicable regulations. The name and resume of the designated safety supervisor shall be submitted to the Engineer at the time of the Notice to Proceed.

END OF SECTION

SECTION 01071

STANDARD REFERENCES

PART 1—GENERAL

1.01 REQUIREMENTS INCLUDED

Abbreviations and acronyms used in Contract Documents to identify reference standards.

1.02 QUALITY ASSURANCE

A. APPLICATION:

When a standard is specified by reference, comply with requirements and recommendations stated in that standard, except when requirements are modified by the Contract Documents, or applicable codes establishing stricter standards.

B. PUBLICATION DATE:

The publication in effect, at the date of issue of the Contract Documents, except when a specific publication date is specified.

1.03 ABBREVIATIONS, NAMES, AND ADDRESSES OF ORGANIZATIONS

Obtain copies of referenced standards direct from publication source, when needed for proper performance of Work, or when required for submittal by Contract Documents. Wherever used in the project manual, the following abbreviations will have the meanings listed:

AA	Aluminum Association Incorporated P.O. Box 753 Waldorf, MD 20604
AABC	Associated Air Balance Council 1518 K Street N.W. Washington, DC 20005
AAMA	American Architectural Manufacturers Association 1540 East Dundee Road, Suite 310 Palatine, IL 60067
AASHTO	American Association of State Highway and Transportation Officials 444 North Capitol Street, N.W., Suite 249 Washington, DC 20001
ABMA	American Bearing Manufacturers Association 1200 19th Street N.W., Suite 300 Washington, DC 20036

ACI	American Concrete Institute 22400 West Seven Mile Road P.O. Box 19150, Redford Station Detroit, MI 48219
AEIC	Association of Edison Illuminating Companies 600 North 18th Street P.O. Box 2641 Birmingham, AL 35291
AGA	American Gas Association ATTN: Records 1515 Wilson Boulevard Arlington, VA 22209
AGMA	American Gear Manufacturer's Association, Inc. 1500 King Street, Suite 201 Alexandria, VA 22314
AHA	American Hardboard Association 1210 West Northwest Highway Palatine, IL 60067
AISC	American Institute of Steel Construction One East Wacker Drive, Suite 3100 Chicago, IL 60601
AISI	American Iron and Steel Institute 1101 Seventeenth Street, NW, Suite 1300 Washington, DC 20036
AITC	American Institute of Timber Construction 7012 South Revere Parkway, Suite 140 Englewood, CO 80112
ALSC	American Lumber Standard Committee P.O. Box 210 Germantown, MD 20875
AMCA	Air Movement and Control Association, Inc. 30 West University Drive Arlington Heights, IL 60004
ANSI	American National Standards Institute 11 West 42nd Street, 13th Floor New York, NY 10036
APA	American Plywood Association 7011 South 19th Street Tacoma, WA 98466
API	American Petroleum Institute 1220 "L" Street N.W. Washington, DC 20005
ARI	Air-Conditioning and Refrigeration Institute 4301 North Fairfax Drive, Suite 425 Arlington, VA 22203
ASCE	American Society of Civil Engineers United Engineering Center 345 East 47th Street New York, NY 10017

ASCII	American Standard Code for Information Interchange United States of America Standards Institute 10 East 40th Street New York, NY 10016
ASE Code	American Standard Safety Code for Elevators, Dumbwaiter and Escalators American National Standards Institute 1430 Broadway New York, NY 10018
ASHRAE	American Society of Heating, Refrigeration and Air Conditioning Engineers, Inc. 1791 Tullie Circle, NE Atlanta, GA 30329
ASME	American Society of Mechanical Engineers 345 East 47th Street New York, NY 10017
ASTM	American Society for Testing and Materials 100 Barr Harbor Drive West Conshohocken, PA 19428
AWPA	American Wood-Preservers' Association 9549 Old Fredrick Road Ellicott City, MD 21042
AWS	American Welding Society 550 NW LeJeune Road P.O. Box 351040 Miami, FL 33135
AWWA	American Water Works Association 6666 West Quincy Avenue Denver, CO 80235
BOCA	Building Officials and Code Administrators, International, Inc. 4051 West Flossmoor Road Country Club Hills, IL 60478
CALTEST	Materials Manual, State of California, Business and Transportation Agency Department of Public Works State of California, Department of Transportation 6002 Folsom Boulevard Sacramento, CA 95819
CALTRANS	Standard Specifications, State of California, Department of Transportation State of California, Business and Transportation Agency P.O. Box 1499 Sacramento, CA 95807
CBM	Certified Ballast Manufacturers 2120 Keith Building Cleveland, OH 44115
CMAA	Crane Manufacturers Association of America, Inc. (Formerly called: Overhead Electrical Crane Institute) (OECI) 8720 Red Oak Boulevard, Suite 201 Charlotte, NC 28217
CRSI	Concrete Reinforcing Steel Institute 933 N Plum Grove Road Schaumburg, IL 60173

CSA	Canadian Standards Association 178 Rexdale Boulevard Rexdale, Ontario, M9W IR3, Canada
DEMA	Diesel Engine Manufacturer's Association 30200 Detroit Road Cleveland, OH 44145
DHI	Door and Hardware Institute 14170 Newbrook Drive Chantilly, VA 22021
DIS	Division of Industrial Safety California Department of Industrial Relations 2422 Arden Way Sacramento, CA 95825
EEI	Edison Electric Institute 90 Park Avenue New York, NY 10016
EIA	Electronic Industries Association Order from: Global Engineering Documents 18201 McDurmott West Irvine, CA 92714
EJMA	Expansion Joint Manufacturers Association 25 North Broadway Tarrytown, NY 10591
ESO	Electrical Safety Orders California Administrative Code, Title 8, Chap. 4, Subarticle 5 Office of Procurement, Publications Section P.O. Box 20191 8141 Elder Creek Road Sacramento, CA 95820
FEDSPEC	Federal Specifications General Services Administration Specification and Consumer Information Distribution Branch Washington Navy Yard, Bldg. 197 Washington, DC 20407
FEDSTDS	Federal Standards (see FEDSPECS)
FM	Factory Mutual Engineering and Research Corporation 1151 Boston-Providence Turnpike P.O. Box 9102 Norwood, MA 02062
HEI	Heat Exchange Institute 1300 Sumner Avenue Cleveland, OH 44115
HI	Hydraulic Institute 9 Sylvan Way, Suite 180 Parsippany, NJ 07054
HPVA	Hardwood Plywood & Veneer Association 1825 Michael Faraday Drive P.O. Box 2789

	Reston, VA 22090-2789
IAPMO	International Association of Plumbing and Mechanical Officials 20001 Walnut Drive S Walnut, CA 91789
ICBO	International Conference of Building Officials 5360 Workman Mill Road Whittier, CA 90601
ICEA	Insulated Cable Engineers Association P.O. Box 440 South Yarmouth, MA 02664
IEEE	Institute of Electrical and Electronics Engineers 445 Hoes Lane P.O. Box 1331 Piscataway, NJ 08855
IES	Illuminating Engineering Society of North America 120 Wall Street New York, NY 10017
ISA	Instrument Society of America 67 Alexander Drive P.O. Box 12277 Research Triangle Park, NC 27709
JIC	Joint Industrial Council 7901 West Park Drive McLean, VA 22101
MFMA	Metal Framing Manufacturers Association 401 N. Michigan Avenue Chicago, IL 60611
MILSPEC	Military Specifications Naval Publications and Forms Center 5801 Tabor Avenue Philadelphia, PA 19120
MSS	Manufacturers Standardization Society of the Valve and Fittings Industry, Inc. 127 Park Street, N.E. Vienna, VA 22180
NAAMM	National Association of Architectural Metal Manufacturers 11 South La Salle Street, Suite 1400 Chicago, IL 60603
NACE	National Association of Corrosion Engineers 1440 South Creek Drive Houston, TX 77084
NBC	National Building Code Published by BOCA
NEC	National Electric Code National Fire Protection Association One Batterymarch Park P.O. Box 9101 Quincy, MA 02269

NELMA	Northeastern Lumber Manufacturers Association, Inc. P.O. Box 87A Cumberland Center, ME 04021
NEMA	National Electrical Manufacturer's Association 2101 L Street, NW, Suite 300 Washington, DC 20037
NESC	National Electric Safety Code American National Standards Institute 1430 Broadway New York, NY 10018
NFOR	National Forest Products Association (Formerly National Lumber Manufacturer's Association) 1111 19 Street NW, Suite 700 Washington, DC 20036
NFPA	National Fire Protection Association One Batterymarch Park P.O. Box 9101 Quincy, MA 02269
NHLA	National Hardwood Lumber Association 6830 Raleigh LaGrange P.O. Box 34518 Memphis, TN 38184-0518
NSF	National Sanitation Foundation 3475 Plymouth Road P.O. Box 130140 Ann Arbor, MI 48113
OSHA	Occupational Safety and Health Act U.S. Department of Labor Occupational and Health Administration San Francisco Regional Office 450 Golden Gate Avenue, Box 36017 San Francisco, CA 94102
PCI	Precast/Prestressed Concrete Institute 175 West Jackson Blvd., Suite 1859 Chicago, IL 60604
PPIC	The Plumbing & Piping Industry Council, Inc. 510 Shatto Place, Suite 402 Los Angeles, CA 90020
RIS	Redwood Inspection Service California Redwood Association 405 Enfrente Dr., Suite 200 Novato, CA 94949
RMA	Rubber Manufacturers Association 1400 K Street NW, Suite 900 Washington, DC 20005
SAE	Society of Automotive Engineers, Inc. 400 Commonwealth Drive Warrendale, PA 15096
SAMA	Scientific Apparatus Makers Association One Thomas Circle Washington, DC 20005

SBC	Standard Building Code Published by SBCCI
SBCCI	Southern Building Code Congress International Inc. 900 Montclair Road Birmingham, AL 35213
SCMA	Southern Cypress Manufacturers Association 400 Penn Center Boulevard, Suite 530 Pittsburgh, PA 15235
SDI	Steel Door Institute 30200 Detroit Road Cleveland, OH 44145
SMACNA	Sheet Metal and Air Conditioning Contractors National Association, Inc. P.O. Box 221230 Chantilly, VA 22021
SPI	Society of the Plastics Industry, Inc. 1275 K Street NW, Suite 400 Washington, DC 20005
SPIB	Southern Pine Inspection Bureau 4709 Scenic Highway Pensacola, FL 32504
SSPC	Steel Structures Painting Council 4516 Henry Street, Suite 301 Pittsburgh, PA 15213
SSPWC	Standard Specifications for Public Works Construction Building News, Inc. 3055 Overland Avenue Los Angeles, CA 90034
TEMA	Tubular Exchanger Manufacturer's Association 25 North Broadway Tarrytown, NY 10591
TPI	Truss Plate Institute 583 D'Onofrio Drive, Suite 200 Madison, WI 53719
UBC	Uniform Building Code Published by ICBO
UL	Underwriters Laboratories Inc. 333 Pfingsten Road Northbrook, IL 60062
UMC	Uniform Mechanical Code Published by ICBO
UPC	Uniform Plumbing Code Published by IAPMO

END OF SECTION

SECTION 01200

PROJECT MEETINGS

PART 1—GENERAL

1.01 SCOPE OF WORK

Construction period meetings will be conducted at monthly intervals or at some other frequency as determined by the Owner and Engineer. These meetings shall be attended by the Owner's representative, Engineer, and the Contractor's Project Manager with appropriate staff, subcontractors, or suppliers. Meetings shall include a pre-construction meeting, construction progress meetings, and other meetings called by the Owner or Engineer in response to developments during the work.

PART 2—PRODUCTS (NOT USED)

PART 3—EXECUTION

3.01 PRECONSTRUCTION MEETING

Prior to start of construction, a conference will be called for the purpose of reviewing the Contract Documents with the Contractor. At this conference, detailed program, sequence of work, methods of access to construction site, environmental controls, and temporary facilities shall be agreed upon between the Engineer and Contractor. All interested agencies and utility companies will be invited to discuss their interests and requirements relating to the project. Contractor and all subcontractor representatives shall attend.

3.02 CONSTRUCTION PERIOD MEETINGS

A. GENERAL:

Owner will conduct bi-weekly construction period meetings, or at other intervals as appropriate throughout the duration of construction.

B. AGENDA:

Project meetings will include reports on construction progress, work schedule and sequencing requirements; coordination of building trades; coordination with other Contracts and public utilities; the status of submittal reviews; the status of information requests; proposed impact to plant operation, and any general business.

C. DOCUMENTATION:

Contractor will prepare Agenda, record meeting minutes and prepare, keep and distributed monthly meetings proceedings in electronic (pdf) and hard copy format.

Contractor will keep and distribute minutes of the monthly meeting proceedings.

3.03 OTHER MEETINGS

Other meetings may be called by Owner or Engineer, as warranted by unforeseen developments during construction. All interested parties shall attend such called other meetings.

END OF SECTION

SECTION 01300

SUBMITTALS

1.0 GENERAL

Submittals covered by these requirements include manufacturers' information, shop drawings, test procedures, test results, samples, requests for substitutions, and miscellaneous work-related submittals. Submittals shall also include, but not be limited to, all mechanical, electrical and electronic equipment and systems, materials, reinforcing steel, fabricated items, and piping and conduit details. The Contractor shall furnish all drawings, specifications, descriptive data, certificates, samples, tests, methods, schedules, and manufacturer's installation and other instructions as specifically required in the contract documents to demonstrate fully that the materials and equipment to be furnished and the methods of work comply with the provisions and intent of the contract documents.

2.0 CONTRACTOR'S RESPONSIBILITIES

The Contractor shall be responsible for the accuracy and completeness of the information contained in each submittal and shall assure that the material, equipment or method of work shall be as described in the submittal. The Contractor shall verify that all features of all products conform to the specified requirements. Submittal documents shall be clearly edited to indicate only those items, models, or series of equipment, which are being submitted for review. All extraneous materials shall be crossed out or otherwise obliterated. The Contractor shall ensure that there is no conflict with other submittals and notify the Engineer in each case where his submittal may affect the work of another contractor or the Owner. The Contractor shall coordinate submittals among his subcontractors and suppliers including those submittals complying with unit responsibility requirements specified in paragraph 11000-1.02 C and applicable technical sections.

The Contractor shall coordinate submittals with the work so that work will not be delayed. He shall coordinate and schedule different categories of submittals, so that one will not be delayed for lack of coordination with another. No extension of time will be allowed because of failure to properly schedule submittals. The Contractor shall not proceed with work related to a submittal until the submittal process is complete. This requires that submittals for review and comment shall be returned to the Contractor stamped "No Exceptions Taken" or "Make Corrections Noted."

The Contractor shall certify on each submittal document that he has reviewed the submittal, verified field conditions, and complied with the contract documents.

The Contractor may authorize in writing a material or equipment supplier to deal directly with the Engineer or with the Owner with regard to a submittal. These dealings shall be limited to contract interpretations to clarify and expedite the work.

3.0 CATEGORIES OF SUBMITTALS

A. GENERAL:

Submittals fall into two general categories; submittals for review and comment, and submittals which are primarily for information only. Submittals which are for information only are generally specified as PRODUCT DATA in Part 2 of applicable specification sections.

At the beginning of work, the Engineer will furnish the Contractor lists of those submittals specified in the project manual. Two separate lists will be provided: submittals for review and comment and product data (submittals) for information only.

B. SUBMITTALS FOR REVIEW AND COMMENT:

All submittals except where specified to be submitted as product data for information only shall be submitted by the Contractor to the Engineer for review and comment.

C. SUBMITTALS (PRODUCT DATA) FOR INFORMATION ONLY:

Where specified, the Contractor shall furnish submittals (product data) to the Engineer for Information only. Submittal requirements for operation and maintenance manuals, which are included in this category, are specified in Section 01730.

4.0 TRANSMITTAL PROCEDURE

A. GENERAL:

Unless otherwise specified, submittals regarding material and equipment shall be accompanied by Transmittal Form 01300-A specified in Section 01999. Submittals for operation and maintenance manuals, information and data shall be accompanied by Transmittal Form 01730-A specified in Section 01999. A separate form shall be used for each specific item, class of material, equipment, and items specified in separate, discrete sections, for which the submittal is required. Submittal documents common to more than one piece of equipment shall be identified with all the appropriate equipment numbers. Submittals for various items shall be made with a single form when the items taken together constitute a manufacturer's package or are so functionally related that expediency indicates checking or review of the group or package as a whole.

A unique number, sequentially assigned, shall be noted on the transmittal form accompanying each item submitted. Original submittal numbers shall have the following format: "XXX"; where "XXX" is the sequential number assigned by the Contractor. Resubmittals shall have the following format: "XXX-Y"; where "XXX" is the originally assigned submittal number and "Y" is a sequential letter assigned for resubmittals, i.e., A, B, or C being the 1st, 2nd, and 3rd resubmittals, respectively. Submittal 25B, for example, is the second resubmittal of submittal 25.

B. DEVIATION FROM CONTRACT:

If the Contractor proposes to provide material, equipment, or method of work which deviates from the project manual, he shall indicate so under "deviations" on the transmittal form accompanying the submittal copies.

C. SUBMITTAL COMPLETENESS:

Submittals which do not have all the information required to be submitted, including deviations, are not acceptable and will be returned without review.

5.0 REVIEW PROCEDURE

A. GENERAL:

Submittals are specified for those features and characteristics of materials, equipment, and methods of operation which can be selected based on the Contractor's judgment of their conformance to the specified requirements. Other features and characteristics are specified in a manner which enables the Contractor to determine acceptable options without submittals. The review procedure is based on the Contractor's guarantee that all features and characteristics not requiring submittals conform as specified. Review shall not extend to means, methods, techniques, sequences or procedures of construction, or to verifying quantities, dimensions, weights or gages, or fabrication processes (except where specifically indicated or required by the project manual) or to safety precautions or programs incident thereto. Review of a separate item, as such, will not indicate approval of the assembly in which the item functions.

When the contract documents require a submittal, the Contractor shall submit the specified information as follows:

1. 3 hard copies of all submitted information plus one digital pdf copy of all information shall be transmitted with submittals for review and comment.

2. Unless otherwise specified, 3 copies of all sample data shall be transmitted with submittals (Product Data) for information only.

B. SUBMITTALS FOR REVIEW AND COMMENT:

Unless otherwise specified, within 30 calendar days after receipt of a submittal for review and comment, the Engineer shall review the submittal and return 1 copy of the marked-up reproducible original noted in 1 above. The returned submittal shall indicate one of the following actions:

1. If the review indicates that the material, equipment or work method complies with the project manual, submittal copies will be marked "NO EXCEPTIONS TAKEN." In this event, the Contractor may begin to implement the work method or incorporate the material or equipment covered by the submittal.

2. If the review indicates limited corrections are required, copies will be marked "MAKE CORRECTIONS NOTED." The Contractor may begin implementing the work method or incorporating the material and equipment covered by the submittal in accordance with the noted corrections. Where submittal information will be incorporated in O&M data, a corrected copy shall be provided.

3. If the review reveals that the submittal is insufficient or contains incorrect data, copies will be marked "AMEND AND RESUBMIT." Except at his own risk, the Contractor shall not undertake work covered by this submittal until it has been revised, resubmitted and returned marked either "NO EXCEPTIONS TAKEN" or "MAKE CORRECTIONS NOTED."

4. If the review indicates that the material, equipment, or work method does not comply with the project manual, copies of the submittal will be marked "REJECTED - SEE REMARKS." Submittals with deviations which have not been identified clearly may be rejected. Except at his own risk, the Contractor shall not undertake the work covered by such submittals until a new submittal is made and returned marked either "NO EXCEPTIONS TAKEN" or "MAKE CORRECTIONS NOTED."

C. SUBMITTALS (PRODUCT DATA) FOR INFORMATION ONLY:

Such information is not subject to submittal review procedures and shall be provided as part of the work under this contract and its acceptability determined under normal inspection procedures.

6.0 EFFECT OF REVIEW OF CONTRACTOR'S SUBMITTALS

Review of contract drawings, methods of work, or information regarding materials or equipment the Contractor proposes to provide, shall not relieve the Contractor of his responsibility for errors therein and shall not be regarded as an assumption of risks or liability by the Engineer or the Owner, or by any officer or employee thereof, and the Contractor shall have no claim under the contract on account of the failure, or partial failure, of the method of work, material, or equipment so reviewed. A mark of "NO EXCEPTIONS TAKEN" or "MAKE CORRECTIONS NOTED" shall mean that the Owner has no objection to the Contractor, upon his own responsibility, using the plan or method of work proposed, or providing the materials or equipment proposed.

END OF SECTION

SECTION 01310

CONSTRUCTION SCHEDULE

1.0 SCOPE

This section specifies the procedures for preparing and revising the critical path method construction schedule used for planning and managing construction activities. The schedule provides a basis for determining the progress status of the project relative to specific dates and completion time.

2.0 DESCRIPTION

The Contractor shall provide a graphic construction schedule prepared by the critical path method of analysis. The critical path schedule shall be prepared from estimates of the required duration and sequence for each item of work and function to be performed. A general guide for preparing such a schedule is contained in "The Use of CPM in Construction, A Manual for Contractors," published by the Associated General Contractors of America. Tabulation and analysis of the work schedule shall be performed by computer using a commercially available critical path software program. In addition to the capability to produce tabular reports, the computer software shall plot the construction schedule after the Contractor has produced it in a draft form as required by paragraph 01310-3

The schedule shall depict all significant construction activities and all items of work listed in the breakdown of contract prices submitted by the Contractor in accordance with paragraph 00710-7.01 A. The dependencies between activities shall be indicated so that it may be established what effect the progress of any one activity has on the schedule.

Time for completion and all specific dates given in Section 01011 and sequencing requirements described in Section 01014 shall be shown on the schedule. Activities making up the critical path shall be identified.

No activity on the schedule shall have a duration longer than 21 days or assigned value greater than $100,000, except activities comprising only fabrication, and delivery may extend for more than 21 days. Activities which exceed these limits shall be divided into more detailed components. The schedule duration of each activity shall be based on the work being performed during the normal 40-hour workweek with allowances made for legal holidays and normal weather conditions.

3.0 SUBMITTAL PROCEDURES

Within 20 days after the date of Notice to Proceed, the Contractor shall complete a construction schedule conforming to paragraph 01310-2.0 and representing in detail all planned procurement and on-site construction activities. The schedule shall be prepared on reproducible paper and may be in draft form with legible freehand lines and lettering. Upon completion of the schedule, the Contractor shall submit the original and two copies to the Engineer in accordance with Section 01300.

Within 7 days after receipt of the submittal, the Engineer shall review the submitted schedule and return one copy of the marked-up original to the Contractor. If the Engineer finds that the submitted schedule does not comply with specified requirements, the corrective revisions will be noted on the submittal copy returned to the Contractor for corrections and resubmitted as specified in Section 01300. After the Engineer has accepted the Contractor's construction schedule, the Contractor shall assign a value to the activities of the construction schedule. No activity shall have a duration longer than 21 days or an assigned value greater than $100,000.

4.0 SCHEDULE REVISIONS

Revisions to the accepted critical path construction schedule may be made only with approval of the Contractor and Owner. Changes in timing for activities which are not on the critical path may be modified with written agreement of the Contractor and Engineer. A change affecting the contract value of any activity, the timing of any activity on the critical path, the completion time and specific dates (Section 01011), and work sequencing (Section 01014) may be made only in accordance with applicable provisions of paragraphs 00710-7.02, 7.03, and 7.04.

5.0 PROJECT STATUS UPDATE

Project status review and update shall be provided each month as specified in paragraph 01200 3.02.C.

END OF SECTION

SECTION 01380

DIGITAL PHOTOGRAPHIC DOCUMENTATION

PART 1—GENERAL

1.01 PRECONSTRUCTION PHOTOGRAPHS AND VIDEO

The Contractor shall provide documentation prior to commencement of work on the site. The documentation shall be digital, and shall indicate the date, name of project, direction in which the images were taken and the location where the images were taken. A minimum of 50 photographs shall be taken prior to construction including at least 4 aerial photographs. Before construction may start, digital copies of the documentation shall be delivered on a CD or DVD to the Engineer. The Contractor shall document the entire area of proposed construction and site entries and access roads from multiple perspectives.

1.02 CONSTRUCTION PHOTOGRAPHS AND VIDEO

The Contractor shall provide digital construction images showing the progress of the work on a monthly basis. Photographs shall be taken to document completely the ongoing work, points of site entry and access roads. A minimum of 50 photographs shall be taken each month including at least 4 aerial photographs. Additional photographs shall be taken and be of such subjects as may be directed by the Engineer. All photographs shall indicate the date, job title and brief description of the image(s), including the location and direction the image was taken. Starting immediately after the date of the preconstruction documentation and continuing as long as the work is in progress, construction photographs shall be taken. A final set of aerial photographs shall be taken once all grassing has been established. Photos should be provided on a CD with each payment application. If software is used to organize, store, and describe the photos, a copy of the software and all relevant updates shall be supplied to both the Owner and Engineer by the Contractor, at no additional cost to Owner and Engineer.

1.03 COMPLETION DIGITAL PHOTOGRAPHS AND VIDEO

The Contractor shall provide one (1) set of completion photographs after Substantial Completion has been achieved. The photographs shall be digital, and shall indicate the date, name of project, direction in which the photograph was taken and the location where the photograph was taken. A minimum of 50 photographs shall be taken at project completion including at least 4 aerial photographs. Before Final Completion and acceptance of the project, digital copies of the photographs shall be delivered on a CD or DVD to the Engineer. The Contractor shall photograph all of the constructed work, the entire area of construction and all site entries and access roads from multiple perspectives.

END OF SECTION

SECTION 01500

CONTRACTOR'S MOBILIZATION AND TEMPORARY UTILITIES

PART 1—GENERAL

1.01 SCOPE

The Contractor shall furnish, install, and maintain a construction trailer (office), staging areas and temporary utilities required for construction and remove upon completion of the work. The Contractor shall also obtain all permits, licenses and OSHA required notices.

PART 2—PRODUCTS

2.01 OFFICE AND STAGING AREAS

The Contractor shall establish an office area and staging area for construction as required. Allowable staging areas are shown on the contract drawings. Any required grading within the staging areas shall be the responsibility of the Contractor and shall be approved by Owner and Engineer. The Contractor shall be solely responsible for damages to equipment or materials due to heavy rains or flooding.

2.02 POWER AND LIGHTING

The Contractor shall provide and pay for temporary power for construction used by the Contractor. The Contractor shall make arrangements with the electrical utility and with the Owner for power takeoff points from the existing service, voltage and phasing requirements, transformers and metering and shall pay the costs and fees arising therefrom. The Contractor shall provide the special connections required for his work.

The Contractor shall provide sufficient electrical lighting so that all work may be done in an efficient manner when there is not sufficient daylight. The Contractor shall remove all temporary lighting following installation and proper operation of permanent lighting.

2.03 TELEPHONE

The Contractor shall provide telephone service for all construction site offices; cell phones are an acceptable substitute.

2.04 WATER

All water for testing, flushing, and construction will be provided by the Contractor at No Cost to the Owner.

2.05 SANITARY FACILITIES

The Contractor shall provide toilet and wash-up facilities for his workforce at the site of the work. The facilities shall comply with all applicable laws, ordinances and regulations pertaining to the public health and sanitation of dwellings.

PART 3—EXECUTION

3.01 GENERAL

Contractor shall maintain and operate systems to assure continuous service. The Contractor shall remove temporary materials and equipment when no longer required for the work.

Before Final acceptance of the Work, all temporary utilities and piping installed by the Contractor shall be entirely removed and restored to their original condition or better to the satisfaction of the Engineer, Owner and the agency owning the affected utility.

END OF SECTION

SECTION 01560

ENVIRONMENTAL CONTROLS

PART 1—GENERAL

1.01 SITE MAINTENANCE

The Contractor shall keep the work site clean and free from rubbish and debris. Materials and equipment shall be removed from the site when they are no longer necessary. Upon completion of the work and before final acceptance, the work site shall be cleared of equipment, unused materials, and rubbish to present a clean and neat appearance.

1.02 TEMPORARY DAMS

Except in time of emergency, earth dams are not acceptable at catch basin openings, local depressions, or elsewhere. Temporary dams of sand bags, asphaltic concrete, or other acceptable material will be permitted when necessary to protect the work, provided their use does not create a hazard or nuisance to the public. Such dams shall be removed from the site as soon as they are no longer necessary.

1.03 AIR POLLUTION CONTROL

The Contractor shall not discharge smoke, dust, and other contaminants, into the atmosphere that violate the regulations of any legally constituted authority. He shall also abate dust nuisance by cleaning, sweeping, and sprinkling with water, or other acceptable means as necessary. The use of water, in amounts that result in mud on public streets, is not acceptable as a substitute for sweeping or other methods. The Contractor shall provide dust control at no additional cost to the Owner.

1.04 NOISE CONTROL

Noise from Contractor's operations shall not exceed limits established by applicable laws or regulations.

1.05 HAZARDOUS MATERIALS STORAGE

The Contractor shall submit Material Safety Data Sheets (MSDS) for all hazardous chemicals contained on site to the Engineer. The Contractor shall also maintain a copy of all applicable MSDS sheets on-site at all times. The Contractor shall notify the Owner and the Engineer upon receipt of any hazardous chemicals on site. All hazardous chemicals on site must be placed in approved containment with an appropriate leak detection system. Flammable materials (i.e. paints, thinners, solvents, etc.) must be stored in approved fire storage cabinets.

END OF SECTION

SECTION 01590

FIELD OFFICE, EQUIPMENT, AND SERVICES

PART 1—GENERAL

1.01 THE REQUIREMENT

A. Resident Representative's Field Office

1. The Contractor shall provide and maintain field office space for the exclusive use of the Construction Managers. The facilities shall be available for their use during the entire life of the Project and shall not be disturbed, moved, or interrupted without the Construction Managers' approval. The office shall be separated into two (2) rooms containing at least two hundred (200) square feet of floor area, sealed from the weather, completed and ready for occupancy within thirty (30) calendar days following the Notice to Proceed with the Project. The office shall be erected on a location approved by the Construction Managers. The Contractor shall arrange for the office to be cleaned at least one (1) time every week in a manner satisfactory to the Construction Managers with the exception of the restrooms which shall be cleaned daily (Monday – Friday).

2. All doors and windows shall be equipped with locking devices to prevent unauthorized entry, and all keys to the door locks shall be loaned to the Construction Managers for their use during the life of the Project. The office shall contain adequate heating, air conditioning, and ventilating facilities. Adequate electric lights shall be provided with a wall receptacle on each of the four walls of each room. Functional, totally enclosed water closet and lavatory shall be provided. An individual, direct-line telephone service, fax, and DSL shall be located as directed for the exclusive use of the Construction Managers for each room. DSL, Fax, telephone service for all calls relation to the Work including long distance, all heat, light, water, and sanitary facilities shall be furnished and paid for by the Contractor.

3. A 48-inch by 96-inch plywood sign shall be erected on the outside wall of the field office in a location determined by the Engineer. The sign shall be painted white with blue, 3-inch high lettering, neatly arranged as follows:

RESIDENT REPRESENTATIVE
FIELD OFFICE

FULTON COUNTY DEPARTMENT OF PUBLIC WORKS
WATER RESOURCES DIVISION
ATLANTA, GA 30303

DESIGN ENGINEER
BROWN AND CALDWELL
990 HAMMOND DRIVE, SUITE 400
ALTANTA, GA 30328

4. The following office furniture and equipment shall be furnished:

   2 Flat top desks, 2-1/2 x 5 feet, with drawers at each end
   1 Plywood drawing table, 3 feet x 6 feet tilt top with drafting stool
   2 Straight chairs
   1 Four-drawer, legal size steel filing cabinet with lock and key
   1 Large metal waste basket
   1 Rack from which to hang drawings, including related appurtenances
   1 Electric water cooler with bottle water supply and disposable drink cups
   1 Bookcase with 4 shelves, 3 feet long
   1 Refrigerator
   1 Microwave
   1 Telephone
   1 Telecopier / Scanner
   2 Surface Pro Tablets with standard software

5. On completion of the Project, the field office shall be removed from the site.

B. Contractor's Field Office

1. The Contractor shall furnish, equip, and maintain a field office at the site of a size required for his operations. The Contractor shall provide his own telephone service and shall readily accessible at the field office, copies of the Contract Documents, latest approved Shop Drawings, and all field Project related correspondence, Change Order, etc.

C. Project Sign and Sign Panel

1. The General Contractor shall erect a sign at the Project site identifying the Project. The sign shall be erected with twenty-one (21) calendar days after the Notice to Proceed and shall be in accordance with the Specifications and details included in this Section. The project sign and sign panel shall be furnished, erected, and maintained by the Contractor at the location designated by the Construction Manager. Wording and colors shall be shown on the detail at the end of this Section.

2. The project sign shall be fabricated, erected and maintained by the Contractor in accordance with the following specifications:

   a) Sign Panel: The sign panel shall be constructed of ¾-inch minimum thickness marine plywood rabbeted into a 2-inch x 4-inch wood frame. All fasteners used in the construction of the sign shall be of a rustproof nature.

   b) Painting: All supports, trim and back of the sign panel shall be painted with at least two (2) coats of the same paint used for the sign face. All paint used shall be exterior grade paint, suitable for use on wood signs.

   c) Sign Supports: The supports for the project sign shall be at least two 4-inch bt 4-inch treated wood posts. The sign panel shall be securely fastened to the sign supports with at least six (6) 3/8-inch diameter galvanized bolts, nuts, and washers. The positioning and alignment of the sign shall be as determined by the Construction Manager.

d) Maintenance: The project sign shall be maintained by the Contractor, in good condition, at all times, for the duration of construction.

e) Removal of Sign from Project Site: The removal of the project sign from the construction site by the Contractor shall be at the completion of construction, when ordered by the Construction Manager.

f) Payment: The cost of the fabrication, erection, maintenance, and removal of the project sign, including all labor and materials, shall be included in the Contractor's Lump Sum Bid. No extra payment will be made of obliterating certain names and offices and replacement thereof of others because of administrative changes during the course of the Contract.

PART 2 – PRODUCTS

(NOT USED)

PART 3 – EXECUTION

(NOT USED)

END OF SECTION

SECTION 01605

SHIPMENT, PROTECTION AND STORAGE

PART 1—GENERAL

1.01 DESCRIPTION

Equipment, products and materials shall be shipped, handled, stored, and installed in ways which will prevent damage to the items. Damaged items will not be permitted as part of the work except in cases of minor damage that have been satisfactorily repaired and are acceptable to the Engineer.

1.02 PIPE

Pipe and appurtenances shall be handled, stored, and installed as recommended by the manufacturer. Pipes with paint, tape coatings, linings or the like shall be stored to protect the coating or lining from physical damage or other deterioration. Pipes shipped with interior bracing shall have the bracing removed only when recommended by the pipe manufacturer.

1.03 EQUIPMENT

A. PACKAGE AND MARKING:

All equipment shall be protected against damage from moisture, dust, handling, or other cause during transport from manufacturer's premises to site. Each item or package shall be marked with the number unique to the specification reference covering the item.

Stiffeners shall be used where necessary to maintain shapes and to give rigidity. Parts of equipment shall be delivered in assembled or sub-assembled units where possible.

B. IDENTIFICATION:

Each item of equipment and valve shall have permanently affixed to it a label or tag with its equipment or valve number designated in the contract. Marker shall be of stainless steel. Location of label will be easily visible.

C. SHIPPING:

Bearing housings, vents and other types of openings shall be wrapped or otherwise sealed to prevent contamination by grit and dirt.

Damage shall be corrected to conform to the requirements of the contract before the assembly is incorporated into the work. The Contractor shall bear the costs arising out of dismantling, inspection, repair and reassembly.

D. FACTORY APPLIED COATINGS:

Unless otherwise specified, each item of equipment shall be shipped to the site of the work with the manufacturer's shop applied epoxy prime coating as specified in Section 09900.

The prime coating shall be applied over clean dry surfaces in accordance with the coating manufacturer's recommendations. The prime coating will serve as a base for field-applied finish coats. Electrical equipment and materials shall be painted by manufacturer as specified in Section 09900.

E. STORAGE:

During the interval between the delivery of equipment to the site and installation, all equipment, unless otherwise specified, shall be stored in an enclosed space affording protection from weather, dust and mechanical damage and providing favorable temperature, humidity and ventilation conditions to ensure against equipment deterioration. In addition to these requirements, Contractor shall adhere to Manufacturer's recommendations.

Equipment and materials to be located outdoors may be stored outdoors if protected against moisture condensation. Equipment shall be stored at least six (6) inches above ground.

Temporary power shall be provided by the Electrical Contractor to energize space heaters or other heat sources for control of moisture condensation for all electrical equipment. Space heaters or other heat sources shall be energized without disturbing the sealed enclosure.

Contractor shall maintain a storage maintenance log that includes the requirements for each piece of equipment and documents that proper action is taking place (rotation of pumps, motors, valves, etc.). A copy of this log shall be certified by the contractor and included with the monthly pay application.

Due to limitations of site space, equipment should not be taken until ready to install.

F. PROTECTION OF EQUIPMENT AFTER INSTALLATION:

After installation, all equipment shall be protected from damage from, including but not limited to, dust, abrasive particles, debris and dirt generated by the placement, chipping, sandblasting, cutting, finishing and grinding of new or existing concrete, terrazzo and metal; and from the fumes, particulate matter, and splatter from welding, brazing and painting of new or existing piping and equipment. At a minimum, vacuum cleaning, blowers with filters, protective shieldings, and other dust suppression methods will be required at all times to adequately protect all equipment. During concreting, including finishing, all equipment that may be affected by cement dust must be completely covered. During painting operations, all grease fittings and similar openings shall be covered to prevent the entry of paint. Electrical switchgear, unit substation, and motor load centers shall not be installed until after all concrete work and sandblasting in those areas have been completed and accepted and the ventilation systems installed.

END OF SECTION

SECTION 01660

EQUIPMENT AND SYSTEM PERFORMANCE AND OPERATIONAL TESTING

PART 1—GENERAL

1.01 DESCRIPTION

This section contains requirements for the Contractor's performance in documenting testing work required under the contract. In addition, this section contains requirements for the Contractor's performance during installed performance testing of all piping, mechanical, electrical, and instrumentation systems provided under the contract. This section supplements, but does not supersede, specific testing requirements found elsewhere in these Specifications and as required by the manufacturers. The Contractor is made aware that each system requires specific performance and operational tests.

1.02 QUALITY ASSURANCE

A. CONTRACTOR'S QUALITY ASSURANCE MANAGER:

The Contractor shall appoint an operations engineer or equally qualified operations specialist as Quality Assurance Manager to manage, coordinate, and supervise the Contractor's quality assurance program. The Quality Assurance Manager shall have at least five (5) years of total experience, or experience on at least five (5) separate projects, managing the startup commissioning of mechanical, electrical, instrumentation, and piping systems. Operations specialists shall have equivalent experience in pumping station operation and maintenance.

B. QUALITY ASSURANCE PROGRAM:

The quality assurance program shall be developed by the Contractor and shall include:

1. A testing plan setting forth the sequence in which all testing work required under this Specification will be implemented;
2. A documentation program to record the results of all equipment and system tests;
3. An installed performance testing program for all mechanical, electrical, instrumentation equipment and systems installed under the contract;
4. A calibration program for all instruments, meters, monitors, gauges, and thermometers installed under the contract;
5. A calibration program for all instruments, gauges, meters, and thermometers used for determining the performance of equipment and systems installed under the contract; and
6. A testing schedule conforming to the requirements specified in Section 01660- paragraph 2.02 C.

For the purposes of this section, a system shall include all items of equipment, devices, and appurtenances connected in such a fashion as their operation or function complements, protects, or controls the operation or function of the equipment. The Quality Assurance Manager shall coordinate the activities of the Contractor and all subcontractors and suppliers to implement the requirements of this section.

C. CALIBRATION:

All test equipment (gauges, meters, thermometers, analysis instruments, and other equipment) used for calibrating or verifying the performance of equipment installed under the contract shall be calibrated to within plus or minus 2 percent of actual value at full scale. Test equipment employed for individual test runs shall be selected so that expected values as indicated by the detailed performance specifications will fall between 60 and 85 percent of full scale. Pressure gauges shall be calibrated in accordance with ANSI/ASME B40.1. Thermometers shall be calibrated in accordance with ASTM E77 and shall be furnished with a certified calibration curve.

Liquid flow meters, including all open channel flow meters and all meters installed in pipelines with diameters greater than two (2) inches shall be calibrated in situ using either the total count or dye dilution methods as referenced in 01660 1.02 D, below. Gas flow meters installed in piping systems with diameters greater than six (6) inches shall be calibrated in situ using the pitot tube velocity averaging method as referenced in 01660 1.02 D, below. Flow meter calibration work shall be performed by individuals skilled in the techniques to be employed. Calibration tests for flow metering systems shall be performed over a range of not less than 10 percent to at least 75 percent of system full scale. At least five (5) confirmed valid data points shall be obtained within this range. Confirmed data points shall be validated by not less than three (3) test runs with results which agree within plus or minus 2 percent.

D. REFERENCES:

This section contains references to the documents set out in the chart below. They are a part of this section as specified and modified. In case of a conflict between the requirements of this section and those of the listed documents, the requirements of this section shall prevail.

Unless otherwise specified, references to documents shall mean the documents in effect at the time of Advertisement for Bids or Invitation to Bid (or on the effective date of the Agreement if there were no Bids). If referenced documents have been discontinued by the issuing organization, references to those documents shall mean the replacement documents issued or otherwise identified by that organization or, if there are no replacement documents, the last version of the document before it was discontinued. Where document dates are given in the following listing, references to those documents shall mean the specific document version associated with that date, whether or not the document has been superseded by a version with a later date, discontinued or replaced.

Reference	Title
ANSI/ASME B40.1	Gauges Pressure Indicating Dial Type—Elastic Element
ASTM E77	Method for Verification and Calibration of Liquid-in-Glass Thermometers
ASHRAE 41.8	Standard Methods of Measurement of Flow of Gas
Dye Dilution Calibration Method	Flow Measurements in Sanitary Sewers By Dye Dilution, Turner Designs Mountain View, California
	Flow Measurement in Sewer Lines by the Dye Dilution Method, Journal of the Water Pollution Control Federation, Vol. 55, Number 5, May, 1983, pg. 531
	Flow Measurement in Open Channels and Closed Conduits, Vol 1, U.S. Department of Commerce, National Bureau of Standards, pg. 361
	Techniques of Water-Resources Investigations of the United States Geological Survey, Chapter 16, Measurement of Discharge Using Tracers

1.03 SUBMITTALS

Submittal material, to be submitted in accordance with Section 01300 prior to the commencement of testing, shall consist of the following:

1. A complete description of the Contractor's plan for documenting the results from the test program in conformance with the requirements of paragraph 01660-2.02 A, including:

    a. Proposed plan for documenting the calibration of all test instruments;

    b. Proposed plan for calibration of all instrument systems, including flow meters and all temperature, pressure, weight, and analysis systems; and

    c. Sample forms for documenting the results of field pressure and performance tests;

2. The credentials and certification of the testing laboratory proposed by the Contractor for calibration of all test equipment;

3. Preoperational check-out procedures, reviewed and approved by the respective equipment manufacturers;

4. Detailed testing plans, setting forth step-by-step descriptions of the procedures proposed by the Contractor for the systematic testing of all

equipment and systems installed under the contract;

5. A schedule and subsequent updates, presenting the Contractor's plan for testing the equipment and systems installed under the contract;

6. A schedule establishing the expected time period (calendar dates) when the Contractor plans to commence operational testing of the completed systems, along with a description of the temporary systems and installations planned to allow operational testing to take place;

7. A summary of the Contractor's Quality Assurance Manager's qualifications, showing conformance to paragraph 01660-1.02 A requirements; and

8. Quality assurance program documentation.

PART 2—PRODUCTS

2.01 GENERAL

The Contractor shall prepare test plans and documentation plans as specified in the following paragraphs. The Engineer will not witness any test work for the purpose of acceptance until all test documentation and calibration plans and the specified system or equipment test plans have been submitted and accepted.

2.02 DOCUMENTATION

A. DOCUMENTATION PLANS:

The Contractor shall develop a records keeping system to document compliance with the requirements of this Section. Calibration documentation shall include identification (by make, manufacturer, model, and serial number) of all test equipment, date of original calibration, subsequent calibrations, calibration method, and test laboratory.

Equipment and system documentation shall include date of test, equipment number or system name, nature of test, test objectives, test results, test instruments employed for the test and signature spaces for the Engineer's witness and the Contractor's quality assurance manager. A separate file shall be established for each system and item of equipment. These files shall include the following information as a minimum:

1. Metallurgical tests
2. Factory performance tests
3. Accelerometer and temperature recordings made during shipment
4. Field calibration tests
5. Field pressure tests
6. Field performance tests
7. Field operational tests

Section 01999 contains samples showing the format and level of detail required for the documentation forms. The Contractor is advised that these are samples only and are not specific to this project or to any item of equipment or system to be installed under the contract. The Contractor shall develop test documentation forms specific to each item of equipment and system installed under the contract. Acceptable documentation forms for all systems and items of equipment shall be produced for review by the Engineer as a condition precedent to the Contractor's receipt of progress payments in excess of 50 percent of the contract amount. Once the Engineer has reviewed and taken no exception to the forms proposed by the Contractor, the Contractor shall produce sufficient forms, at his expense, to provide documentation of all testing work to be conducted as a part of the contract.

B. TEST PLANS:

The Contractor shall develop test plans detailing the coordinated, sequential testing of each item of equipment and system installed under the contract. Each test plan shall be specific to the item of equipment or system to be tested. Test plans shall identify by specific equipment or tag number each device or control station to be manipulated or observed during the test procedure and the specific results to be observed or obtained. Test plans shall also be specific as to support systems required to complete the test work, temporary systems required during the test work, subcontractors' and manufacturers' representatives to be present and expected test duration. As a minimum, the test plans shall include the following features:

1. Step-by-step proving procedure for all control and electrical circuits by imposing low voltage currents and using appropriate indicators to affirm that the circuit is properly identified and connected to the proper device;

2. Calibration of all analysis instruments and control sensors;

3. Performance testing of each individual item of piping, mechanical, electrical, and instrumentation equipment. Performance tests shall be selected to duplicate the operating conditions described in the project manual;

4. System tests designed to duplicate, as closely as possible, operating conditions described in the project manual; and

5. Shoring, bracing, pipe restraint, and other devices necessary to successfully complete the testing.

Test plans shall contain a complete description of the procedures to be employed to achieve the desired test environment.

As a condition precedent to receiving progress payments in excess of 75 percent of the contract amount, or in any event, progress payments due to the Contractor eight (8) weeks in advance of the date the Contractor wishes to begin any testing work (whichever occurs earliest in the project schedule), the Contractor shall have submitted all test plans required for the systematic field performance and operational tests for all equipment and systems installed under the contract. Once the Engineer has reviewed

and taken no exception to the Contractor's test plans, the Contractor shall reproduce the plans in sufficient number for the Contractor's purposes and an additional ten (10) copies for delivery to the Engineer. No test work shall begin until the Contractor has delivered the specified number of final test plans to the Engineer.

C. TESTING SCHEDULE:

The Contractor shall produce a testing schedule setting forth the sequence contemplated for performing the test work. The schedule shall be in bar chart form, plotted against calendar time, shall detail the equipment and systems to be tested, and shall be coordinated with the Contractor's construction schedule specified in Section 01310. The schedule shall show the contemplated start date, duration of the test and completion of each test. The test schedule shall be submitted no later than four (4) weeks in advance of the date testing is to begin. The Engineer will not witness any testing work for the purpose of acceptance until the Contractor has submitted a schedule to which the Engineer takes no exception. The test schedule shall be updated weekly, showing actual dates of test work, indicating systems and equipment testing completed satisfactorily and meeting the requirements of these Specifications.

PART 3—EXECUTION

3.01 GENERAL

The Quality Assurance Manager shall organize teams made up of qualified representatives of the Contractor, equipment suppliers, subcontractors, the Contractor's independent testing laboratory, and others, as appropriate, to efficiently and expeditiously calibrate and test the equipment and systems installed and constructed under the contract. The objective of the testing program shall be to demonstrate, to the Engineer's complete satisfaction, that the structures, systems, and equipment constructed and installed under this contract meet all performance requirements and the facility is ready for the commissioning process to commence. In addition, the testing program shall produce baseline operating conditions for the Owner to use in a preventive maintenance program.

3.02 CALIBRATION OF FIXED INSTRUMENTS

Calibration of analysis instruments, sensors, gauges, and meters installed under this contract shall proceed on a system-by-system basis. No equipment or system performance acceptance tests shall be performed until instruments, gauges, and meters to be installed in that particular system have been calibrated and the calibration work has been witnessed by the Engineer.

All analysis instruments, sensors, gauges, and meters used for performance testing shall be subject to recalibration to confirm accuracy after completion, but prior to acceptance of each performance test. All analysis instruments, sensors, gauges, and meters installed under the contract shall be subject to recalibration as a condition precedent to commissioning under the provisions of Section 01662.

3.03 SYSTEM AND EQUIPMENT PERFORMANCE TESTS

A. GENERAL:

Each item of mechanical, electrical, and instrumentation equipment installed under the contract shall be tested to demonstrate compliance with the performance requirements of this project manual. Each electrical, instrumentation, mechanical, and piping system installed or modified under this contract shall be tested in accordance with the requirements of these Specifications.

Performance testing of the force main will include individual testing of each pipe material as described in 01660 1.01. Once all performance testing for each pipe material has been successfully completed, the force main will be plugged, filled and pressurized. The force main will be pressurized so that no portion of the force main experiences pressure in excess of its rated operating pressure and held for three (3) hours, with no visible leaks or pressure drops, or the lesser of that allowed for any of the individual pipe materials.

Operational tests may not proceed for any equipment or system without successful completion of the respective performance testing.

Performance tests shall consist of the following:

1. Pressure and/or leakage tests;

2. Electrical testing as specified in Division 16;

3. Wiring and piping, individual component, loop, loop commissioning and tuning testing

4. Preoperational checkout for all mechanical equipment. Preoperational check-out procedures shall be reviewed and approved by the respective equipment manufacturers; and

5. Initial operation tests of all mechanical, electrical, and instrumentation equipment and systems to demonstrate compliance with the performance requirements of this project manual.

In general, performance tests for any individual system shall be performed in the order listed above. The order may be altered only on the specific written authorization of the Engineer after receipt of a written request, complete with justification of the need for the change in sequence.

B. PRESSURE AND LEAKAGE TESTS:

Pressure and leakage tests shall be conducted in accordance with applicable portions of Divisions 3 and 15 (Including Sections 3300, and 15050). All acceptance tests shall be witnessed by the Engineer. Evidence of successful completion of the pressure and leakage tests shall be the Engineer's signature on the test forms prepared by the Contractor.

C. FUNCTIONAL CHECKOUT:

Prior to energization (in the case of electrical systems and equipment), all circuits shall be rung out and tested for continuity and shielding in accordance with the procedures required in Division 16.

D. COMPONENT CALIBRATION AND LOOP TESTING:

Prior to energization (in the case of instrumentation system and equipment), all loops and associated instruments shall be calibrated and tested.

E. ELECTRICAL RESISTANCE:

Electrical resistance testing shall be in accordance with Division 16.

F. PREOPERATIONAL TESTS:

Preoperational tests shall include the following:

1. Alignment of equipment, using reverse dial indicator method;

2. Pre-operation lubrication; and

3. Tests per the manufacturers' recommendations for prestart preparation and preoperational check-out procedures.

G. FUNCTIONAL TESTS:

1. General: Once all affected equipment has been subjected to the required preoperational check-out procedures and the Engineer has witnessed and has not found deficiencies in that portion of the work, individual items of equipment and systems may be started and operated under simulated operating conditions to determine as nearly as possible whether the equipment and systems meet the requirements of these specifications. Potable or raw water may be used for the testing of all liquid systems except gaseous, oil, or chemical systems. Test media for gaseous, oil, or chemical systems shall either be the intended fluid or a compatible substitute. The equipment shall be operated a sufficient period of time to determine machine operating characteristics, including noise, temperatures and vibration; to observe performance characteristics; and to permit initial adjustment of operating controls. When testing requires the availability of auxiliary systems such as looped piping, electrical power, control air, or instrumentation which have not yet been placed in service, the Contractor shall provide acceptable substitute sources, capable of meeting the requirements of the machine, device, or system at no additional cost to the Owner. Disposal methods for test media shall be subject to review by the Engineer. During the functional test period, the Contractor shall obtain baseline operating data on all equipment with motors greater than 1 horsepower to include amperage, bearing

temperatures, and vibration. The baseline data shall be collected for the Owner to enter in a preventive maintenance system.

Test results shall be within the tolerances set forth in the applicable sections of these Specifications. If no tolerances have been specified, test results shall conform to tolerances established by recognized industry practice. Where, in the case of an otherwise satisfactory functional test, any doubt, dispute, or difference should arise between the Engineer and the Contractor regarding the test results or the methods or equipment used in the performance of such test, then the Owner may order the test to be repeated. If the repeat test, using such modified methods or equipment as the Owner may require, confirms the previous test, then all costs in connection with the repeat test will be paid by the Owner. Otherwise, the costs shall be borne by the Contractor. Where the results of any functional test fail to comply with the contract requirements for such test, then such repeat tests as may be necessary to achieve the contract requirements shall be made by the Contractor at his expense.

The Contractor shall provide, at no expense to the Owner, all power, fuel, compressed air supplies, water, and chemicals, all labor, temporary piping, heating, ventilating, and air conditioning for any areas where permanent facilities are not complete and operable at the time of functional tests, and all other items and work required to complete the functional tests. Temporary facilities shall be maintained until permanent systems are in service.

2. Retesting: If under test, any portion of the work should fail to fulfill the contract requirements and is adjusted, altered, renewed, or replaced, tests on that portion when so adjusted, altered, removed, or replaced, together with all other portions of the work as are affected thereby, shall, unless otherwise directed by the Engineer, be repeated within reasonable time and in accordance with the specified conditions. The Contractor shall pay to the Owner all reasonable expenses incurred by the Owner, including the costs of the Engineer, as a result of repeating such tests.

3. Post-Test Inspection: Once functional testing has been completed, all machines shall be rechecked for proper alignment and realigned, as required. All equipment shall be checked for loose connections, unusual movement, or other indications of improper operating characteristics. Any deficiencies shall be corrected to the satisfaction of the Engineer. All machines or devices which exhibit unusual or unacceptable operating characteristics shall be disassembled and inspected. Any defects found during the course of the inspection shall be repaired or the specific part or entire equipment item shall be replaced to the complete satisfaction of the Engineer at no cost to the Owner.

3.04 OPERATIONAL TESTS

Once all equipment and systems have been tested successfully individually, the Contractor shall fill all with the intended process fluids. After filling operations have been completed and prior to start-up and commissioning, the Contractor shall operate all

pumping station systems for a continuous period of not less than 72 hours, simulating actual operating conditions to the greatest extent possible. The Contractor shall install temporary connections, bulkheads and make other provisions to recirculate process fluids or otherwise simulate anticipated operating conditions. During the operational testing period, the Contractor's Quality Assurance Manager and testing team shall monitor the characteristics of each machine and system and report any unusual conditions to the Engineer. This test will include operation under various loading conditions, as directed by the Engineer.

The operational testing period shall commence after this initial period of variable operation. Should the operational testing period be halted for any reason related to the facilities constructed or the equipment furnished under this contract, or the Contractor's temporary testing systems, the operational testing program shall be repeated until the specified continuous period has been accomplished without interruption. All process units shall be brought to full operating conditions, including temperature, pressure, and flow.

All costs for water, fuel, power, and chemicals required during this operational test shall be borne by the Contractor. Process systems and units shall mean all materials and equipment provided in this contract.

A detailed description of the operational test shall be included in the testing plan.

END OF SECTION

SECTION 01662

COMMISSIONING

PART 1—GENERAL

1.01 DESCRIPTION

This section contains requirements for the Contractor's performance during the commissioning of the structures, equipment, and systems constructed and installed during the course of the contract. All commissioning work, as described in this section, shall be performed by the Contractor. Commissioning may begin at or after Substantial Completion and shall be completed prior to final completion. Commissioning will not commence until all associated equipment is operating in fully automatic mode.

During the commissioning test, the plant is to be operated in both of the anticipated operating modes (Bardenpho as well as Simultaneous Nitrification & Denitrification). The changeover between processes will occur with each of the two operating mode being commissioned for a two (2) week period. If during this process, equipment failure or installation work completed under this contract interrupts the commissioning process, the contractor shall be responsible for additional cost.

1.02 QUALITY ASSURANCE

A. CLEANUP:

Following completion of the operational testing period, the Contractor shall remove, clean, and replace all permanent and temporary filters and strainers in all pipeline systems; dewater and clean all sumps; and dewater all process units for final inspection as a condition precedent to commissioning.

B. COMMISSIONING TEAM:

The Contractor shall assemble a commissioning team under the direction of an individual duly authorized to commit the Contractor's personnel and resources to respond to requests for assistance on the part of the Engineer or, through the Engineer, the Owner. The commissioning team shall consist of representatives of the Contractor and others as appropriate. Team members shall have experience with operations, process mechanical installation, electrical, and instrumentation start up as applicable. The commissioning team shall be available at the site of the work during normal working hours (8 hours a day, 5 days a week, Saturdays, Sundays, and legal holidays excepted) and shall be available within 2 hours' notice at all other times upon notice by telephone. The commissioning team shall at all times be equipped and ready to provide for emergency repairs, adjustments, and corrections to the equipment and systems installed and modified as a part of the contract.

1.03 SUBMITTALS

The following information shall be submitted to the Engineer by the Contractor in accordance with the provisions of Section 01300:

1. Detailed plans for commissioning each process unit and each system constructed or modified as a part of the work performed under the contract.

2. The Contractor's plan for providing a commissioning team conforming to the requirements of paragraph 01662-1.02 B during the commissioning period. The plan shall be complete with a daytime staffing plan and names, qualifications, and telephone numbers of those assigned to off-hour standby duty.

PART 2—PRODUCTS

Working with representatives of the Owner and the Engineer, the Contractor shall develop and produce a detailed, written plan for the startup and initial operation, under actual operating conditions, of the equipment and systems installed and constructed under the contract. The resulting document, after acceptance by the Engineer, shall serve as the guidance manual for the commissioning process.

PART 3—EXECUTION

After completion of the equipment and system performance and operational testing, where required, and agreement on the part of the Engineer that the systems did meet all test requirements, commissioning will begin. The commissioning period for each modified or new unit process system shall be two (2) weeks. The Contractor shall remove all temporary piping, bulkheads, controls and other alterations to the permanent systems that may have been needed during the performance and operational testing and shall perform the tasks necessary to make the improvements constructed under this contract fully operational. The Engineer shall confirm in writing the date(s) that the system is ready for commissioning and on which actual commissioning activities commence. Activities conducted prior to such written confirmation shall not constitute commissioning.

The Owner's operation and maintenance personnel will be responsible for operation of the systems to be commissioned. The portion of the work to be commissioned shall be fully operational, performing all functions for which it was designed.

The Contractor shall be available at all times during commissioning periods to provide immediate assistance in case of failure of any portion of the system being commissioned. At the end of the commissioning period and when all corrections required by the Engineer to assure a reliable and completely operational facility are complete, the Engineer shall issue a completion certificate. Each system shall have been issued a completion certificate as a condition precedent to the final acceptance of the work of the contract.

END OF SECTION

SECTION 01664

TRAINING

PART 1—GENERAL

1.01 DESCRIPTION

This section contains requirements for training the Owner's personnel, by persons retained by the Contractor specifically for the purpose, in the proper operation and maintenance of the equipment and systems installed under the contract.

1.02 QUALITY ASSURANCE

Where required by the detailed specifications, the Contractor shall provide on-the-job training of the Owner's personnel. The training sessions shall be conducted by qualified and experienced, factory-trained representatives of the various equipment manufacturers. Training shall include instruction in both operation and maintenance of the subject equipment.

1.03 SUBMITTALS

The following information shall be supplied by the Contractor and submitted to the Engineer in accordance with the provisions of Section 01300. The material shall be reviewed and accepted by the Engineer as a condition precedent to receiving progress payments in excess of 70 percent of the contract amount and not less than three (3) weeks prior to the provision of training.

1. Lessons plans for each training session to be conducted by the manufacturer's representatives. In addition, training manuals, handouts, visual aids, and other reference materials shall be included.

2. Subject of each training session, identity and qualifications of individuals to be conducting the training, and tentative date and time of each training session.

PART 2—PRODUCTS

2.01 GENERAL

Where specified, the Contractor shall conduct training sessions for the Owner's personnel to instruct the staff on the proper operation, care, and maintenance of the equipment and systems installed under this contract. Training shall take place at the site of the work and under the conditions specified in the following paragraphs. Approved operation and maintenance manuals shall be available at least 30 days prior to the date scheduled for the individual training session.

The Contractor must supply the Owner with at least three (3) sets of any specialized tools or equipment that are required for the purpose of operation and maintenance. The Contractor shall train the staff on the use of the tools and equipment.

2.02 LOCATION

All classroom portions of the training sessions shall take place at the site of the work. Sessions requiring hands-on lessons shall be located at the respective equipment.

2.03 LESSON PLANS

Formal written lesson plans shall be prepared for each training session. Lesson plans shall contain an outline of the material to be presented along with a description of visual aids to be utilized during the session. Each plan shall contain a time allocation for each subject.

One (1) complete set of originals of the lesson plans, training manuals, handouts, visual aids, and reference material shall be the property of the Owner and shall be suitably bound for proper organization and easy reproduction. The Contractor shall furnish ten (10) copies of necessary training manuals, handouts, visual aids and reference materials at least one (1) week prior to each training session.

2.04 FORMAT AND CONTENT

Each training session shall be comprised of time spent both in the classroom and at the specific location of the subject equipment or system. At a minimum, training session shall cover the following subjects for each item of equipment or system:

1. Familiarization

    a. Review catalog, parts lists, drawings, etc., which have been previously provided for the plant files and operation and maintenance manuals;

    b. Observe the installation of the specific equipment items

    c. Demonstrate the unit and indicate how all parts of the specifications are met

    d. Answer questions

2. Safety

    a. Use of material previously provided, review safety references

    b. Discuss proper precautions around equipment.

3. Operation

    a. Use of material previously provided, review reference literature

    b. Explain all modes of operation (including emergency)

c. Instruct Owner's personnel on proper use of the equipment

4. Preventive Maintenance

a. Use of material previously provided, review preventive maintenance (PM) lists including:

i. Reference material

ii. Daily, weekly, monthly, quarterly, semiannual, and annual jobs.

b. Show how to perform PM jobs

c. Show Owner's personnel what to look for as indicators of equipment problems

5. Corrective Maintenance

a. List possible problems

b. Discuss repairs--point out special problems

c. Open up equipment and demonstrate procedures, where practical

6. Parts

a. Show how to use previously provided parts list and order parts

b. Identify spare parts on hand. Make recommendations regarding additional parts that should be available

7. Local Representatives

a. Where to order parts: name, address, telephone.

b. Service problems:

i. Whom to call

ii. How to get emergency help

8. Operation and Maintenance Manuals

a. Review any other material submitted

b. Update material, as required

PART 3—EXECUTION

Training shall be conducted in conjunction with the operational testing and commissioning periods. Classes shall be scheduled such that classroom sessions are interspersed with field instruction in logical sequence. The Contractor shall arrange to have the training conducted on consecutive days, with no more than six (6) hours of classes scheduled for any one day. Concurrent classes shall not be allowed. Training shall be certified on Form 11000-B specified in Section 01999.

Acceptable operation and maintenance manuals for the specific equipment shall be provided to the Owner prior to the start of any training. All training sessions shall be videotaped.

The following services shall be provided for each item of equipment or system as required in individual specification sections. Additional services shall be provided, where specifically required in individual specification sections.

1. As a minimum classroom equipment training for operations personnel will include:

    a. Using slides and drawings, discuss the equipment's specific location in the plant and an operational overview

    b. Purpose and plant function of the equipment

    c. A working knowledge of the operating theory of the equipment

    d. Start-up, shutdown, normal operation, and emergency operating procedures, including a discussion on system integration and electrical interlocks, if any

    e. Identify and discuss safety items and procedures

    f. Routine preventative maintenance, including specific details on lubrication and maintenance of corrosion protection of the equipment and ancillary components

    g. Operator detection, without test instruments, of specific equipment trouble symptoms

    h. Required equipment exercise procedures and intervals

    i. Routine disassembly and assembly of equipment if applicable (as judged by the Owner on a case-by-case basis) for purposes such as operator inspection of equipment

2. At a minimum, hands-on equipment training for operations personnel will include:

    a. Identify location of equipment and review the purpose

b. Identifying piping and flow options

c. Identifying valves and their purpose

d. Identifying instrumentation:

i. Location of primary element

ii. Location of instrument readout

iii. Discuss purpose, basic operation, and information interpretation

e. Discuss, demonstrate, and perform standard operating procedures and round checks

f. Discuss and perform the preventative maintenance activities

g. Discuss and perform start-up and shutdown procedures

h. Perform the required equipment exercise procedures

i. Perform routine disassembly and assembly of equipment if applicable

j. Identify and review safety items and perform safety procedures, if feasible

3. Classroom equipment training for the maintenance and repair personnel will include:

a. Theory of operation

b. Description and function of equipment

c. Start-up and shutdown procedures

d. Normal and major repair procedures

e. Equipment inspection and troubleshooting procedures including the use of applicable test instruments and the "pass" and "no pass" test instrument readings

f. Routine and long-term calibration procedures

g. Safety procedures

h. Preventative maintenance such as lubrication; normal maintenance such as belt, seal, and bearing replacement; and up

to major repairs such as replacement of major equipment part(s) with the use of special tools, bridge cranes, welding jigs, etc.

4. Hands-on equipment training for maintenance and repair personnel shall include:

   a. Locate and identify equipment components

   b. Review the equipment function and theory of operation

   c. Review normal repair procedures

   d. Perform start-up and shutdown procedures

   e. Review and perform the safety procedures

   f. Perform Owner approved practice maintenance and repair job(s), including mechanical and electrical adjustments and calibration and troubleshooting equipment problems

END OF SECTION

SECTION 01700

PROTECTION OF EXISTING FACILITIES

PART 1—GENERAL

1.01 STRUCTURES

The Contractor shall take all precautions necessary to protect the integrity and usefulness of all existing facilities. If necessary, the Contractor may, with the approval of the Owner, remove such existing structures, including curbs, gutters, pipelines and utility poles as may be necessary for the performance of the work, and shall rebuild the structures thus removed in as good a condition as found with the requirements specified. Contractor shall repair existing structures that are damaged as a result of the work under the contract.

1.02 ROADS AND STREETS AND OTHER PAVED AREAS

Unless otherwise specified, roads, streets, and driveways in which the surface is removed, broken, or damaged, or in which the ground has caved or settled during the work under the contract, shall be resurfaced and brought to the original grade and section. Roadways used by the Contractor shall be cleaned and repaired. Before resurfacing material is placed, edges of pavements shall be trimmed back far enough to provide clean, solid, vertical faces, and shall be free of loose material. All paved surfaces shall be cut with a pavement saw. Rough cuts are not allowed. Repair work shall conform to the paving specification Section 02500.

The Contractor shall maintain access to the work at all times using gravel or other temporary surfaces as applicable. The Contractor shall notify the Owner and the Engineer two (2) weeks prior to cutting any paved surface.

1.03 CULTIVATED AREAS AND OTHER SURFACE IMPROVEMENTS

Cultivated or planted areas and other surface improvements which are damaged by actions of the Contractor shall be restored as nearly as possible to their original condition by the Contractor. Restoration shall take place within one (1) week or sooner of damage occurring as directed by the Engineer. Existing guard posts, barricades, and fences shall be protected and replaced if damaged by the Contractor. Where specific responsibility for the damage cannot be determined to the satisfaction of the Engineer, restoration and replacement work shall be the responsibility of the Contractor. Where replacement of planted areas in conflict with new or proposed utilities, the Contractor shall replace such areas or plantings in kind at locations designated by the Engineer.

1.04 PROTECTION OF EXISTING INSTALLATIONS

The Contractor shall protect all existing operating facilities, pipelines and structures from damages. However, if damage occurs, the Contractor shall immediately correct or replace existing equipment, controls, systems, structures, or facilities which are damaged in any way as a result of his operations. Where specific responsibility for damage cannot be determined to the satisfaction of the Engineer, restoration and replacement work shall be the responsibility of the Contractor.

END OF SECTION

SECTION 01725

RECORD DOCUMENTS

PART 1—GENERAL

1.01 DESCRIPTION

Record documents refer to those documents maintained and annotated by the Contractor during construction and are defined as (1) a neatly and legibly marked set of contract drawings showing the final location of piping, equipment, electrical conduits, outlet boxes and cables; (2) specifications annotated with addenda and change order items, by section; (3) change order documents; (4) submittals and product data; (5) field test data; (6) additional documents such as schedules, lists, drawings, and electrical and instrumentation diagrams included in the specifications; and (7) Contractor layout and installation drawings.

Unless otherwise specified, record drawings shall be full size and maintained in a clean, dry, and legible condition. Record documents shall not be used for construction purposes and shall be available for review by the Engineer during normal working hours. At the completion of the work, prior to final payment, all record drawings shall be submitted to the Engineer.

The record documents shall be maintained continuously. Prior to each request for partial progress payment, Engineer will review record drawings with Contractor. Progress payment requests shall not be processed unless record drawings are current.

Marking of the drawings shall be kept current and shall be done at the time the material and equipment are installed. Annotations to the record drawings shall be made with an erasable colored pencil conforming to the following color code:

Additions – Red
Deletions – Green
Comments – Blue
Dimensions – Graphite

Legibly mark to record actual depths, horizontal and vertical location of underground raceways, cables, and appurtenances referenced to permanent surface improvements. The record drawings shall show field changes, changes by change order, and details not on original contract drawings.

END OF SECTION

SECTION 01730

OPERATION AND MAINTENANCE INFORMATION

1.0 SCOPE

Operation and maintenance (O&M) instructions shall be provided in accordance with this section and as required in the technical sections of these Specifications. O&M information shall be provided for each maintainable piece of equipment, equipment assembly or subassembly, and material provided or modified under the contract.

O&M instructions must be submitted and approved before on-site training may start.

2.0 TYPES OF INFORMATION REQUIRED

A. GENERAL:

O&M information shall contain the names, addresses, and telephone numbers of the manufacturer, the nearest representative of the manufacturer, and the nearest supplier of the manufacturer's equipment and parts. In addition, one or more of the following items of information shall be provided as applicable.

B. OPERATING INSTRUCTIONS:

Specific instructions, procedures, and illustrations shall be provided for the following phases of operations:

1. SAFETY PRECAUTIONS: List personnel hazards for equipment and list safety precautions for all operating conditions.

2. OPERATOR PRESTART: Provide requirements to set up and prepare each system for use.

3. START-UP, SHUTDOWN, AND POSTSHUTDOWN PROCEDURES: Provide a control sequence for each of these operations.

4. NORMAL OPERATIONS: Provide control diagrams with data to explain operation and control of systems and specific equipment.

5. EMERGENCY OPERATIONS: Provide emergency procedures for equipment malfunctions to permit a short period of continued operation or to shut down the equipment to prevent further damage to systems and equipment. Include emergency shutdown instructions for fire, explosion, spills, or other foreseeable contingencies. Provide guidance on emergency operations of all utility systems including valve locations and portions of systems controlled.

6. OPERATOR SERVICE REQUIREMENTS: Provide instructions for services to be performed by the operator such as lubrication, adjustments, and inspection.

7. ENVIRONMENTAL CONDITIONS: Provide a list of environmental conditions (temperature, humidity, and other relevant data) which are best suited for each product or piece of equipment and describe conditions under which equipment should not be allowed to run.

C. PREVENTIVE MAINTENANCE:

The following information shall be provided for preventive and scheduled maintenance to minimize corrective maintenance and repair:

1. LUBRICATION DATA: Provide lubrication data, other than instructions for lubrication in accordance with paragraph 2.0-B6 above.

   a. A table showing recommended lubricants for specific temperature ranges and applications;
   b. Charts with a schematic diagram of the equipment showing lubrication points, recommended types and grades of lubricants, and capacities; and
   c. A lubrication schedule showing service interval frequency.

2. PREVENTIVE MAINTENANCE PLAN AND SCHEDULE: Provide manufacturer's schedule for routine preventive maintenance, inspections, tests, and adjustments required to ensure proper and economical operation and to minimize corrective maintenance and repair. Provide manufacturer's projection of preventive maintenance man-hours on a daily, weekly, monthly, and annual basis including craft requirements by type of craft.

D. CORRECTIVE MAINTENANCE:

Manufacturer's recommendations shall be provided on procedures and instructions for correcting problems and making repairs.

1. TROUBLESHOOTING GUIDES AND DIAGNOSTIC TECHNIQUES: Provide step-by-step procedures to promptly isolate the cause of typical malfunctions. Describe clearly why the checkout is performed and what conditions are to be sought. Identify tests or inspections and test equipment required to determine whether parts and equipment may be reused or require replacement.

2. WIRING DIAGRAMS AND CONTROL DIAGRAMS: Wiring diagrams and control diagrams shall be point-to-point drawings of wiring and control circuits including factory-field interfaces. Provide a complete and accurate depiction of the actual job-specific wiring and control work. On diagrams, number electrical and electronic wiring and pneumatic control tubing and the terminals for each type identically to actual installation numbering.

3. MAINTENANCE AND REPAIR PROCEDURES: Provide instructions and list tools required to restore product or equipment to proper condition or operating standards.

4. REMOVAL AND REPLACEMENT INSTRUCTIONS: Provide step-by-step procedures and list required tools and supplies for removal, replacement, disassembly, and assembly of components, assemblies, subassemblies, accessories, and attachments. Provide tolerances, dimensions, settings, and adjustments required. Instructions shall include a combination of test and illustrations.

5. SPARE PARTS AND SUPPLY LISTS: Provide lists of spare parts and supplies required for maintenance and repair to ensure continued service or operation without unreasonably delays. Special consideration is required for facilities at remote locations. List spare parts and supplies that have a long lead time to obtain.

6. CORRECTIVE MAINTENANCE MANHOURS: Provide manufacturer's projection of corrective maintenance man-hours including craft requirements by type of craft. Corrective maintenance that requires participation of the equipment manufacturer shall be identified and tabulated separately.

E. APPENDICES:

The following information shall be provided; include information not specified in the preceding paragraphs but pertinent to the maintenance or operation of the product or equipment.

1. PARTS IDENTIFICATION: Provide identification and coverage for all parts of each component, assembly, subassembly, and accessory of the end items subject to replacement. Include special hardware requirements, such as requirement to use high-strength bolts and nuts. Identify parts by make, model, serial number, and source of supply to allow reordering without further identification. Provide clear and legible illustrations, drawings, and exploded views to enable easy identification of the items. When illustrations omit the part numbers and description, both the illustrations and separate listing shall show the index, reference, or key number which will cross-reference the illustrated part to the listed part. Parts shown in the listings shall be grouped by components, assemblies, and subassemblies.

2. WARRANTY INFORMATION: List and explain the various warranties and include the servicing and technical precautions prescribed by the manufacturers or contract documents to keep warranties in force.

3. PERSONNEL TRAINING REQUIREMENTS: Provide information available from the manufacturers to use in training designated personnel to operate and maintain the equipment and systems properly.

4. TESTING EQUIPMENT AND SPECIAL TOOL INFORMATION: Provide information on test equipment required to perform specified tests and on

special tools needed for the operation, maintenance, and repair of components.

3.0 TRANSMITTAL PROCEDURE

Unless otherwise specified, O&M manuals, information, and data shall be transmitted in accordance with Section 01300 accompanied by Transmittal Form 01730-A and Equipment Record Forms 01730-B and/or 01730-C, as appropriate, all as specified in Section 01999. The transmittal form shall be used as a checklist to ensure the manual is complete. Only complete sets of O&M instructions will be reviewed for acceptance.

Five (5) hardcopies and one digital word searchable pdf of the specified O&M information shall be provided. For ease of identification, each manufacturer's brochure and manual shall be appropriately labeled with the equipment name and equipment number as it appears in the project manual. The information shall be organized in the binders in numerical order by the equipment numbers assigned in the project manual. The binders shall be provided with a table of contents and tab sheets to permit easy location of desired information.

If manufacturers' standard brochures and manuals are used to describe O&M procedures, such brochures and manuals shall be modified to reflect only the model or series of equipment used on this project. Extraneous material shall be crossed out neatly or otherwise annotated or eliminated.

4.0 CMMS DATABASE

Equipment nameplate data, Spare parts, and recommended maintenance procedures shall be provided for all Division 11, 13, 14, 15, 16, and 17 equipment. This information shall be submitted by the contractor for all mechanical, electrical, and process equipment on the project in an excel format. Data shall include the following:

1. All Nameplate data
2. Equipment number
3. Equipment cost
4. Required spare parts
5. Spare Parts cost
6. Anticipated Useful life of Equipment
7. Standard maintenance procedures activity
8. A description of maintenance activities
9. Maintenance procedure frequency

4.0 FIELD CHANGES

Following the acceptable installation and operation of an equipment item, the item's instructions and procedures shall be modified and supplemented by the Contractor to reflect any field changes or information requiring field data.

END OF SECTION

SECTION 01800

ENVIRONMENTAL CONDITIONS

PART 1—GENERAL

1.01 DESCRIPTION

This section describes the environmental conditions which have been observed at the site of the work and which may reasonably be anticipated throughout the life of the project.

The Little River WRF is at an existing elevation of approximately 885 feet above mean sea level. Climate conditions are described as follows:

Description	Range of Conditions
Winter	Cool and damp
Summer	Hot and humid
Relative humidity, percent	
Indoors	20 to 90
Average outdoors	20 to 100
Air temperature, degrees F	
Outdoors	15 to 105
Indoors (Ventilated Areas)	35 to 104
Indoors (Conditioned)	60 to 80
Barometric pressure, inches, mercury	29.1 to 31.0

Additional conditions which may be applicable are specified in other sections.

END OF SECTION

SECTION 01900

SEISMIC REQUIREMENTS

PART 1--GENERAL

1.01 DESCRIPTION

This section establishes the minimum seismic requirements for architectural, mechanical, electrical components. Except where specifically detailed in the Contract Documents, all architectural, mechanical, electrical and nonstructural systems, components, and elements shall be permanently attached to structures, including supporting structures and attachments, and nonbuilding structures that are supported by other structures, shall meet the requirements of this section.

The Contractor shall be responsible for the seismic requirements specified including the conformance of work for all subcontractors, manufacturers and suppliers with regard to the indicated and specified seismic requirements. Contractor shall design, provide and install all supports, restraints, anchorage, etc. as required in seismic requirements.

1.02 REFERENCES

This section contains references to the following documents. They are a part of this section as specified and modified. In case of conflict between the requirements of this section and those of the listed documents, the requirements of this section shall prevail.

Reference	Title
IBC	International Building Code
ASCE 7	Minimum Design Loads for Buildings and Other Structures
ASTM C 635	Standard Specification for the Manufacture, Performance, and Testing of Metal Suspension Systems for Acoustical Tile and Lay-in Panel Ceilings
ASTM C 636	Standard Practice for Installation for Metal Ceiling Suspension Systems for Acoustical Tile and Lay-in Panel Ceilings
API STD 650	Welded Steel Tanks for Oil Storage
ASME A 17.1	Safety Code for Elevators and Escalators
ASME B 31	Code for Pressure Piping
ASME	Boiler and Pressure Vessel Code
AWWA D100	Welded Steel Tanks for Water Storage
Manufacturers Standardiza-tion Society of the Valve and	Pipe Hangers and Supports – Materials,

Reference	Title
Fitting Industry SP-58	Design and Manufacture
NFPA	Standard for the Installation of Sprinkler Systems
Rack Manufacturers Institute	Specification for the Design, Testing and Utilization of Industrial Steel Storage Racks

1.03 DEFINITIONS

Components are defined as systems, equipment, parts, or other elements including supporting structures and attachments.

The reference building code is defined as the building code cited on the structural drawings or specified herein for the design of the basic structure. If not indicated elsewhere, the building code shall be the International Building Code, 2000 edition.

The specified seismic criteria is defined as the seismic criteria cited on the structural drawings or specified herein for the design of the basic structure.

1.04 SEISMIC DESIGN REQUIREMENTS

Seismic design shall conform to International Building Code Class.

Architectural, mechanical, electrical and non-structural components shall be designed and constructed to resist the seismic forces and displacements based upon ASCE 7, the reference building code, and specified seismic criteria. In the case of conflict the more stringent requirements shall govern.

The interrelationship of components and their effect on each other shall be such that the failure of one component shall not cause the failure of any other component.

Components shall be anchored to the building structure to transfer seismic forces. Connections shall be a positive connection such as bolted or welded. Generally, connections shall be bolted to allow for removal/installation of items. Welding shall be allowed only where specifically indicated on the drawings or by the Construction Manager. Anchorage shall not rely on friction for any part of force transfer.

Connections and structural members providing seismic support shall be compatible with structure and shall not be detrimental to the structure’s integrity nor reduce its load carrying capacity, not excessively limit accessibility around equipment.

Exceptions: Exemption from the requirements for seismic analysis and design are permitted only to the extent permitted in the reference code.

1.05 SUBMITTALS

The following submittals shall be provided as specified in Section 01300.

1. A copy of this specification section, with addendum updates included, and all referenced and applicable sections, with addendum updates included, with each paragraph check-marked to indicate specification compliance or marked to indicate requested deviations from specification requirements. Check marks (✓) shall denote full compliance with a paragraph as a whole. If deviations from the specifications are indicated, and therefore requested by the Contractor, each deviation shall be underlined and denoted by a number in the margin to the right of the identified paragraph, referenced to a detailed written explanation of the reasons for requesting the deviation. The Construction Manager shall be the final authority for determining acceptability of requested deviations. The remaining portions of the paragraph not underlined will signify compliance on the part of the Contractor with the specifications. Failure to include a copy of the marked-up specification sections, along with justification(s) for any requested deviations to the specification requirements, with the submittal shall be sufficient cause for rejection of the entire submittal with no further consideration.

A. CERTIFICANT OF COMPLIANCE:

Certification of Compliance, signed and sealed by a Professional Engineer holding current registration in the State where the project is located, stating that all systems, equipment, and other elements, including supporting structures, attachments, and connections are designed to withstand the required seismic forces and displacements in accordance with stated building code.

B. INSTALLATION DRAWINGS:

Installation drawings shall include sufficient information relating to the attachments to verify compliance. Anchor type, material, size, embedment, number and location shall be clearly shown.

1.06 SPECIFIC COMPONENTS

A. STORAGE TANKS:

Tanks, supporting structures and anchorages shall be designed for the weight of the tank, appurtenances, and the tank contents at the maximum capacity. Anchorage shall account for the weight and hydrodynamic effects of the contents.

B. DUCTWORK:

Equipment installed within ductwork shall be independently supported and braced. Support and bracing of heating and cooling coils shall account for the weight of the contents.

C. PIPING SYSTEMS:

Supports and bracing of piping system shall account for the weight and hydrodynamic effects of the contents.

D. PRESSURE PIPING:

Pressure piping support and bracing shall conform to ASME B 31 in addition for the forces and displacements requirements of the reference code.

E. SPRINKLER SYSTEMS:

Sprinkler system support and bracing shall conform to NFPA 13 in addition for the force and displacement requirements of the reference code.

F. GENERAL SUPPORTS:

Pipe, duct, raceways, and cable tray supports and bracing shall conform to the AISC Manual of Steel Construction and MSS SP-58 in addition to the force and displacement requirements of the reference code.

G. CEILINGS:

Ceiling shall conform to ASTM C 636 in addition for the force and displacement requirements of the reference code.

END OF SECTION

SECTION 01910

SPECIAL INSPECTIONS

PART 1--GENERAL

1.01 DESCRIPTION

This section establishes the contractor's requirements for interfacing with Building Code-Required Special Inspections. Special Inspections shall include but not be limited to the following: soil preparation, foundations, concrete work, masonry work, and structural steel. For a list of anticipated Special Inspection, see Appendix.

The Owner will engage and pay for the services of the Special Inspector(s) and Testing Laboratories.

The Special Inspection program shall in no way relieve the Contractor of their contractual obligation to perform the work in accordance to the requirements of the Contract Documents nor from implementing an internal Quality Control program. Prior to scheduling a Special Inspection, the Contractor's quality control personnel shall inspect all Special Inspection work to verify that it is properly done and ready for Special Inspection by the Special Inspector.

1.02 REFERENCES

This section contains references to the following documents. They are a part of this section as specified and modified. In case of conflict between the requirements of this section and those of the listed documents, the requirements of this section shall prevail.

Reference	Title
IBC	International Building Code

1.03 DEFINITIONS

A. APPROVED AGENCY:

An established and recognized agency regularly engaged in conducting test of furnishing inspection services, when such agency has been approved by the Building Official.

B. APPROVED FABRICATOR:

An established and qualified person, firm, or corporation identified as such by the Building Official.

C. BUILDING OFFICIAL:

Local department or it's representatives responsible for enforcing local codes, reviewing construction documents, and issuing permits for the erection, alteration, demolition, and moving of buildings and structures.

D. SPECIAL INSPECTION:

Inspection as herein required of the materials, installation, fabrication, erection or placement of components and connections requiring special expertize to ensure compliance with approved construction documents and referenced standards.

E. SPECIAL INSPECTION, CONTINUOUS:

The full-time observation of work requiring special inspection by an approved special inspector who is present in the area where the work is being performed.

F. SPECIAL INSPECTION, PERIODIC:

The part-time or intermittent observation of work requiring special inspection by an approved special inspector who is present in the area where the work is being performed and at the completion of the work

G. DEFECTIVE WORK:

Work that fails Special Inspection.

H. FABRICATED ITEM:

Structural, load-bearing or lateral load-resisting assemblies consisting of materials assembled prior to installation in a building or structure or subjected to operations such as heat treatment, thermal cutting, cold working or reforming after manufacture and prior to installation in a building or structure. Materials produced in accordance with standard specifications referenced by IBC, such as rolled structural steel shapes, steel-reinforcing bars, masonry units and wood structural panels shall not be considered "fabricated items."

1.04 CONTRACTOR'S RESPONSIBILITIES

1. Notify the Special Inspector and the Construction Manager when a special inspection is needed at least 24 hours in advance. No Work that needs a special inspection shall be covered until such special inspection has occurred and Special Inspector has found the Work to be in conformance with project's requirements. Verification from the Special Inspector can perform the special inspection shall be obtained in writing from the Special Inspector.

2. Provide direct access to the approved plans and specifications for the project.

3. Provide safe access to the work to be inspected including all necessary support labor and equipment.

4. Provide samples for testing.

5. Cost of all re-testing and re-inspection of work that is determined to be Defective Work by the Special Inspector.

6. When fabricated items are fabricated in a facility not approved to perform work without Special Inspection and such facility is further than 100 miles from the project site, the Contractor shall pay for travel expenses of the Special Inspector and Testing Laboratory.

1.05 SUBMITTALS

The following submittals shall be provided as specified in Section 01300.

1. A copy of this specification section, with addendum updates included, and all referenced and applicable sections, with addendum updates included, with each paragraph check-marked to indicate specification compliance or marked to indicate requested deviations from specification requirements. Check marks (✓) shall denote full compliance with a paragraph as a whole. If deviations from the specifications are indicated, and therefore requested by the Contractor, each deviation shall be underlined and denoted by a number in the margin to the right of the identified paragraph, referenced to a detailed written explanation of the reasons for requesting the deviation. The Construction Manager shall be the final authority for determining acceptability of requested deviations. The remaining portions of the paragraph not underlined will signify compliance on the part of the Contractor with the specifications. <u>Failure to include a copy of the marked-up specification sections, along with justification(s) for any requested deviations to the specification requirements, with the submittal shall be sufficient cause for rejection of the entire submittal with no further consideration.</u>

   A. LIST OF ALL FABRICATORS APPROVED TO PERFORM WORK WITHOUT SPECIAL INSPECTIONS.

      List of all fabricators listing all fabricated items each will fabricate. List shall indicate whether fabricator is approved to perform work without Special Inspection. Approval shall be based upon review of the fabricator's written procedural and quality control manuals and the fabricator's periodic auditing of fabrication practices as determined by a Building Official approved special inspection agency.

   B. FABRICATOR CERTIFICANT OF COMPLIANCE FOR FABRICATED ITEMS:

      All fabrications by a fabricator approved to perform work without Special Inspection shall provide a Certification of Compliance, clearly listing all

fabricated items applicable and stating that all work was performed in accordance with the Contract Documents.

IBC TABLE 1704.3
REQUIRED VERIFICATION AND INSPECTION OF STEEL CONSTRUCTION

VERIFICATION AND INSPECTION	CONTINUOUS	PERIODIC	REFERENCED STANDARD[a]	IBC REFERENCE
1. Material verification of high-strength bolts, nuts and washers:				
a. Identification markings to conform to ASTM standards specified in the approved construction documents.	—	X	AISC 360, Section A3.3 and applicable ASTM material standards	
b. Manufacturer's certificate of compliance required.	—	X	—	—
2. Inspection of high-strength bolting:				
a. Snug-tight joints.	—	X	AISC 360, Section M2.5	1704.3.3
b. Pretensioned and slip-critical joints using turn-of-nut with matchmarking, twist-off bolt or direct tension indicator methods of installation.	—	X		
c. Pretensioned and slip-critical joints using turn-of-nut without matchmarking or calibrated wrench methods of installation.	X	—		
3. Material verification of structural steel and cold-formed steel deck:				
a. For structural steel, identification markings to conform to AISC 360.	—	X	AISC 360, Section M5.5	
b. For other steel, identification markings to conform to ASTM standards specified in the approved construction documents.	—	X	Applicable ASTM material standards	
c. Manufacturer's certified test reports.	—	X		
4. Material verification of weld filler materials:				
a. Identification markings to conform to AWS specification in the approved construction documents.	—	X	AISC 360, Section A3.5 and applicable AWS A5 documents	—
b. Manufacturer's certificate of compliance required.	—	X	—	—
5. Inspection of welding:				
a. Structural steel and cold-formed steel deck:				
1) Complete and partial joint penetration groove welds.	X	—	AWS D1.1	1704.3.1
2) Multipass fillet welds.	X	—		
3) Single-pass fillet welds >5/16"	X	—		
4) Plug and slot welds.	X	—		
5) Single-pass fillet welds ≤5/16"	—	X		
6) Floor and roof deck welds.	—	X	AWS D1.3	

IBC TABLE 1704.3
REQUIRED VERIFICATION AND INSPECTION OF STEEL CONSTRUCTION

VERIFICATION AND INSPECTION	CONTINUOUS	PERIODIC	REFERENCED STANDARD[a]	IBC REFERENCE
b. Reinforcing steel:				
1) Verification of weldability of reinforcing steel other than ASTM A 706.	—	X	AWS D1.4 ACI 318: Section 3.5.2	—
2) Reinforcing steel-resisting flexural and axial forces in intermediate and special moment frames, and boundary elements of special structural walls of concrete and shear reinforcement.	X	—		
3) Shear reinforcement.	X	—		
4) Other reinforcing steel.	—	X		
6. Inspection of steel frame joint details for compliance with approved construction documents:				
a. Details such as bracing and stiffening.	—	X	—	1704.3.2
b. Member locations.	—	X		
c. Application of joint details at each connection.	—	X		

For SI: 1 inch = 25.4 mm.

[a] Where applicable, see also Section 1707.1, Special inspection for seismic resistance.

IBC TABLE 1704.4
REQUIRED VERIFICATION AND INSPECTION OF CONCRETE CONSTRUCTION

VERIFICATION AND INSPECTION	CONTINUOUS	PERIODIC	REFERENCED STANDARD[a]	IBC REFERENCE
1. Inspection of reinforcing steel, including prestressing tendons, and placement.	—	X	ACI 318: 3.5, 7.1-7.7	1913.4
2. Inspection of reinforcing steel welding in accordance with Table 1704.3, Item 5b.	—	—	AWS DI.4 ACI 318: 3.5.2	—
3. Inspection of bolts to be installed in concrete prior to and during placement of concrete where allowable loads have been increased or where strength design is used.	X	—	ACI 318: 8.1.3, 21.2.8	1911.5, 1912.1
4. Inspection of anchors installed in hardened concrete.	—	X	ACI 318: 3.8.6, 8.1.3, 21.2.8	1912.1
5. Verifying use of required design mix.	—	X	ACI 318: Ch. 4, 5.2-5.4	1904.2.2, 1913.2, 1913.3
6. At the time fresh concrete is sampled to fabricate specimens for strength tests, perform slump and air content tests, and determine the temperature of the concrete.	X	—	ASTM C 172 ASTM C 31 ACI 318: 5.6, 5.8	1913.10
7. Inspection of concrete and shotcrete placement for proper application techniques.	X	—	ACI 318: 5.9, 5.10	1913.6, 1913.7, 1913.8
8. Inspection for maintenance of specified curing temperature and techniques.	—	X	ACI 318: 5.11-5.13	1913.9
9. Inspection of prestressed concrete.				
a. Application of prestressing forces.	X	—	ACI 318: 18.20	—
b. Grouting of bonded prestressing tendons in the seismic-force-resisting system.	X		ACI 318: 18.18.4	
10. Erection of precast concrete members.	—	X	ACI 318: Ch. 16	—
11. Verification of in-situ concrete strength, prior to stressing of tendons in posttensioned concrete and prior to removal of shores and forms from beams and structural slabs.	—	X	ACI 318: 6.2	—
12. Inspect formwork for shape, location and dimensions of the concrete member being formed.	—	X	ACI 318: 6.1.1	—

For SI: 1 inch = 25.4 mm.

[a] Where applicable, see also Section 1707.1, Special inspection for seismic resistance.

IBC TABLE 1704.5.1
LEVEL 1 REQUIRED VERIFICATION AND INSPECTION OF MASONRY CONSTRUCTION

INSPECTION TASK	FREQUENCY OF INSPECTION		REFERENCE FOR CRITERIA		
	CONTINUOUS	PERIODIC	IBC SECTION	TMS 402/ACI 530/ASCE 5[a]	TMS 602/ACI 530.1/ASCE 6[a]
1. Compliance with required inspection provisions of the construction documents and the approved submittals shall be verified.	—	X	—	—	Art. 1.5
2. Verification of f_m and f_{AAC} prior to construction except where specifically exempted by this code.	—	X	—	—	Art. 1.4B
3. Verification of slump flow and VSI as delivered to the site for self-consolidating grout.	X	—	—	—	Art. 1.5B.1.b.3
4. As masonry construction begins, the following shall be verified to ensure compliance:					
a. Proportions of site-prepared mortar.	—	X	—	—	Art. 2.6A
b. Construction of mortar joints.	—	X	—	—	Art. 3.3B
c. Location of reinforcement, connectors, prestressing tendons and anchorages.	—	X	—	—	Art. 3.4, 3.6A
d. Prestressing technique.	—	X	—	—	Art. 3.6B
e. Grade and size of prestressing tendons and anchorages.	—	X	—	—	Art. 2.4B, 2.4H
5. During construction the inspection program shall verify:					
a. Size and location of structural elements.	—	X	—		Art. 3.3F
b. Type, size, and location of anchors, including other details of anchorage of masonry to structural members, frames or other construction.	—	X	—	Sec. 1.2.2(e), 1.16.1	—
c. Specified size, grade and type of reinforcement, anchor bolts, prestressing tendons and anchorages.	—	X	—	Sec. 1.15	Art. 2.4, 3.4
d. Welding of reinforcing bars.	X	—	—	Sec. 2.1.9.7.2, 3.3.3.4(b)	—
e. Preparation, construction and protection of masonry during cold weather (temperature below 40^0F) or hot weather (temperature above 90^0F).	—	X	Sec. 2104.3, 2104.4	—	Art. 1.8C, 1.8D
f. Application and measurement of prestressing force.	X	—	—	—	Art. 3.6B

IBC TABLE 1704.5.1
LEVEL 1 REQUIRED VERIFICATION AND INSPECTION OF MASONRY CONSTRUCTION

INSPECTION TASK	FREQUENCY OF INSPECTION		REFERENCE FOR CRITERIA		
	CONTINUOUS	PERIODIC	IBC SECTION	TMS 402/ACI 530/ASCE 5[a]	TMS 602/ACI 530.1/ASCE 6[a]
6. Prior to grouting, the following shall be verified to ensure compliance:					
a. Grout space is clean.	—	X	—	—	Art. 3.2D
b. Placement of reinforcement and connectors, and prestressing tendons and anchorages.	—	X	—	Sec. 1.13	Art. 3.4
c. Proportions of site-prepared grout and prestressing grout for bonded tendons.	—	X	—	—	Art. 2.6B
d. Construction of mortar joints.	—	X	—	—	Art. 3.3B
7. Grout placement shall be verified to ensure compliance.	X	—	—	—	Art. 3.5
a. Grouting of prestressing bonded tendons.	X	—	—	—	Art. 3.6C
8. Preparation of any required grout specimens, mortar specimens and/or prisms shall be observed.	—	X	Sec. 2105.2.2, 2105.3	—	Art. 1.4

For SI: °C = [(°F) – 32]/1.8.

[a] The specific standards referenced are those listed in Chapter 35.

IBC TABLE 1704.5.3
LEVEL 2 REQUIRED VERIFICATION AND INSPECTION OF MASONRY CONSTRUCTION

INSPECTION TASK	FREQUENCY OF INSPECTION		REFERENCE FOR CRITERIA		
	CONTINUOUS	PERIODIC	IBC SECTION	TMS 402/ACI 530/ASCE 5[a]	TMS 602/ACI 530.1/ASCE 6[a]
1. Compliance with required inspection provisions of the construction documents and the approved submittals.	—	X	—	—	Art. 1.5
2. Verification of f_m and f_{AAC} prior to construction and for every 5,000 square feet during construction.	—	X	—	—	Art. 1.4B
3. Verification of proportions of materials in premixed or preblended mortar and grout as delivered to the site.	—	X	—	—	Art. 1.5B
4. Verification of slump flow and VSI as delivered to the site for self-consolidating grout.	X	—	—	—	Art. 1.5B.1.b.3
5. The following shall be verified to ensure compliance:					
a. Proportions of site-prepared mortar, grout and prestressing grout for bonded tendons.	—	X	—	—	Art. 2.6A
b. Placement of masonry units and construction of mortar joints.	—	X	—	—	Art. 3.3B
c. Placement of reinforcement, connectors and prestressing tendons and anchorages.	—	X	—	Sec. 1.15	Art. 3.4, 3.6A
d. Grout space prior to grout.	X	—	—	—	Art. 3.2D
e. Placement of grout.	X	—	—	—	Art. 3.5
f. Placement of prestressing grout.	X	—	—	—	Art. 3.6C
g. Size and location of structural elements.	—	X	—	—	Art.3.3F
h. Type, size, and location of anchors, including other details of anchorage of masonry to structural members, frames or other construction.	X	—	—	Sec. 1.2.2(e), 1.16.1	—
i. Specified size, grade and type of reinforcement, anchor bolts, prestressing tendons and anchorages.	—	X	—	Sec. 1.15	Art. 2.4, 3.4
j. Welding of reinforcing bars.	X	—	—	Sec. 2.1.9.7.2, 3.3.3.4(b)	—
k. Preparation, construction and protection of masonry during cold weather (temperature below 40^0F) or hot weather (temperature above 90^0F).	—	X	Sec. 2104.3, 2104.4	—	Art. 1.8C, 1.8D
l. Application and measurement of prestressing force.	X	—	—	—	Art. 3.6B
6. Preparation of any required grout specimens and/or prisms shall be observed.	X	—	2105.2.2, 2105.3	—	Art. 1.4

For SI: °C = [(°F) – 32]/1.8, 1 square foot = 0.0929 m^2.

IBC TABLE 1704.5.3
LEVEL 2 REQUIRED VERIFICATION AND INSPECTION OF MASONRY CONSTRUCTION

INSPECTION TASK	FREQUENCY OF INSPECTION		REFERENCE FOR CRITERIA		
	CONTINUOUS	PERIODIC	IBC SECTION	TMS 402/ACI 530/ASCE 5[a]	TMS 602/ACI 530.1/ASCE 6[a]

[a] The specific standards referenced are those listed in Chapter 35.

IBC TABLE 1704.7
REQUIRED VERIFICATION AND INSPECTION OF SOILS

VERIFICATION AND INSPECTION TASK	CONTINUOUS DURING TASK LISTED	PERIODICALLY DURING TASK LISTED
1. Verify materials below shallow foundations are adequate to achieve the design bearing capacity.	—	X
2. Verify excavations are extended to proper depth and have reached proper material.	—	X
3. Perform classification and testing of compacted fill materials.	—	X
4. Verify use of proper materials, densities, and lift thicknesses during placement and compaction of controlled fill.	X	—
5. Prior to placement of compacted fill, observe subgrade and verify that site has been prepared properly.	—	X

IBC TABLE 1704.8
REQUIRED VERIFICATION AND INSPECTION OF DRIVEN DEEP FOUNDATION ELEMENTS

VERIFICATION AND INSPECTION TASK	CONTINUOUS DURING TASK LISTED	PERIODICALLY DURING TASK LISTED
1. Verify element materials, sizes and lengths comply with the requirements.	X	—
2. Determine capacities of test elements and conduct additional load tests, as required.	X	—
3. Observe driving operations and maintain complete and accurate records for each element.	X	—
4. Verify placement locations and plumbness, confirm type and size of hammer, record number of blows per foot of penetration, determine required penetrations to achieve design capacity, record tip and butt elevations and document any damage to foundation element.	X	—
5. For steel elements, perform additional inspections in accordance with Section 1704.3.	—	—
6. For concrete elements and concrete-filled elements, perform additional inspections in accordance with Section 1704.4.	—	—
7. For specialty elements, perform additional inspections as determined by the registered design professional in	—	—

responsible charge.		

IBC TABLE 1704.9
REQUIRED VERIFICATION AND INSPECTION OF CAST-IN-PLACE DEEP FOUNDATION ELEMENTS

VERIFICATION AND INSPECTION TASK	CONTINUOUS DURING TASK LISTED	PERIODICALLY DURING TASK LISTED
1. Observe drilling operations and maintain complete and accurate records for each element.	X	—
2. Verify placement locations and plumbness, confirm element diameters, bell diameters (if applicable), lengths, embedment into bedrock (if applicable) and adequate end-bearing strata capacity. Record concrete or grout volumes.	X	—
3. For concrete elements, perform additional inspections in accordance with Section 1704.4.	X	—

END OF SECTION

SECTION 01999

REFERENCE FORMS

The forms listed below and included in this section are referenced from other sections of the project manual:

Form No.	Title
01300-A	Submittal Transmittal Form
01660-A	Equipment Test Report Form
01730-A	Operation and Maintenance Transmittal Form
01730-B	Equipment Record Form
01730-C	Equipment Record Form
09900-A	Coating System Inspection Checklist
11000-A	Manufacturer's Installation Certification Form
11000-B	Manufacturer's Instruction Certification Form
11000-C	Unit Responsibility Certification Form
11002-A	Rigid Equipment Mount Installation Inspection Checklist
11060-A	Motor Data Form
16000-A	Wire and Cable Resistance Test Data Form
16000-B	Installed Motor Test Data Form
16000-C	Dry Transformer Test Data Form
16000-D	Motor Control Center Test Form
16000-E	Protective Relay Test Form
16000-F	Low Voltage Switchgear Test Form
17000-A	Loop Wiring and Insulation Resistance Test Data Form
17000-B	Control Circuit Piping Leak Test Form
17000-C	Controller Calibration Test Data Form
17000-D	Panel Indicator Calibration Test Data Form
17000-E	Recorder Calibration Test Data Form
17000-F	Signal Trip Calibration Test Data Form
17000-G	Field Switch Calibration Test Data Form
17000-H	Transmitter Calibration Test Data Form
17000-I	Miscellaneous Instrument Calibration Test Data Form
17000-J	Individual Loop Test Data Form
17000-K	Loop Commissioning Test Data Form

SUBMITTAL TRANSMITTAL

Submittal Description: _____ Submittal No:[1] _____

Spec Section: _____

	Routing	Sent	Received
OWNER:	Contractor/CM		
PROJECT:	CM/Engineer		
	Engineer/CM		
CONTRACTOR:	CM/Contractor		

We are sending you ☐ Attached ☐ Under separate cover via _____

☐ Submittals for review and comment ☐ Product data for information only

Remarks: _____

Item	Copies	Date	Section No.	Description	Review action[a]	Reviewer initials	Review comments attached

[a]**Note: NET = No exceptions taken; MCN = Make corrections noted; A&R = Amend and resubmit; R = Rejected** Attach additional sheets if necessary.

Contractor

Certify either A or B:

☐ A. We have verified that the material or equipment contained in this submittal meets all the requirements, including coordination with all related work, specified (no exceptions).

☐ B. We have verified that the material or equipment contained in this submittal meets all the requirements specified except for the attached deviations.

No.	Deviation

Certified by: _____

Contractor's Signature

[1]See paragraph 01300-4.0 A, Transmittal Procedure.

01660-A. EQUIPMENT TEST REPORT FORM

NOTE: This example equipment test report is provided for the benefit of the Contractor and is not specific to any piece of equipment to be installed as a part of this project. The example is furnished as a means of illustrating the level of detail required for the preparation of equipment test report forms for this project.

CITY OF SAMPLE

EXAMPLE WATER TREATMENT PLANT
STAGE IV EXPANSION PROJECT

ABC Construction Company, Inc., General Contractor
XYZ Engineering, Inc., Engineer

EQUIPMENT TEST REPORT

Equipment Name: Sludge Pump 2
Equipment Number: P25202
Specification Ref: 11390
Location: East Sedimentation Basin Gallery

	Contractor		Engineer	
	Verified	Date	Verified	Date
PREOPERATIONAL CHECKLIST				
Mechanical				
Lubrication				
Alignment				
Anchor bolts				
Seal water system operational				
Equipment rotates freely				
Safety guards				
Valves operational				
Hopper purge systems operational				
Sedimentation tank/hopper clean				
O&M manual information complete				
Manufacturer's installation certificate complete				
Electrical (circuit ring-out and high-pot tests)				
Circuits:				
Power to MCC 5				
Control to HOA				

	Contractor		Engineer	
	Verified	Date	Verified	Date
Indicators at MCC:				
Red (running)				
Green (power)				
Amber (auto)				
Indicators at local control panel				
Wiring labels complete				
Nameplates:				
MCC				
Control station				
Control panel				
Equipment bumped for rotation				
Piping Systems				
Cleaned and flushed:				
Suction				
Discharge				
Pressure tests				
Temporary piping screens in place				
Instrumentation and Controls				
Flowmeter FE2502F calibration				
Calibration Report No.				
Flow recorder FR2502G calibrated against transmitter				
VFD speed indicator calibrated against independent reference				
Discharge overpressure shutdown switch calibration				
Simulate discharge overpressure Shutdown				
FUNCTIONAL TESTS				
Mechanical				
Motor operation temperature satisfactory				
Pump operating temperature satisfactory				
Unusual noise, etc?				
Pump operation: 75 gpm/50 psig				
Measurement:				
Flow:				
Pressure:		Test gage number:		
Alignment hot				
Dowelled in				
Remarks:				

	Contractor		Engineer	
	Verified	Date	Verified	Date
Electrical				
Local switch function:				
Runs in *HAND*				
No control power in *OFF*				
Timer control in *AUTO*				
Overpressure protection switch PS2502C functional in both *HAND* and *AUTO*				
Overpressure protection switch PS2502C set at 75 psig				
PLC 2500 set at 24-hour cycle, 25 min *ON*				
OPERATIONAL TEST				
48-hour continuous test. Pump cycles as specified, indicators functional, controls functional, pump maintains capacity, overpressure protection remains functional, hour meter functional				

RECOMMENDED FOR BENEFICIAL OCCUPANCY

_____ _____

Engineer _____ Date _____

ACCEPTED FOR BENEFICIAL OCCUPANCY

_____ _____

Owner's Representative_____ Date _____

01730-A. OPERATION AND MAINTENANCE TRANSMITTAL FORM

Date: _____ Submittal No:[2] _____

To: _____ Contract No: _____

_____ Spec. Section: _____

_____ Submittal Description: _____

_____ From: _____

Attention: _____ _____

Checklist	Contractor		Engineer	
	Satisfactory	N/A	Accept	Deficient
1. Table of contents				
2. Equipment record forms				
3. Manufacturer information				
4. Vendor information				
5. Safety precautions				
6. Operator prestart				
7. Start-up, shutdown, and postshutdown procedures				
8. Normal operations				
9. Emergency operations				
10. Operator service requirements				
11. Environmental conditions				
12. Lubrication data				
13. Preventive maintenance plan and schedule				
14. Troubleshooting guides and diagnostic techniques				
15. Wiring diagrams and control diagrams				
16. Maintenance and repair procedures				
17. Removal and replacement instructions				
18. Spare parts and supply list				
19. Corrective maintenance man-hours				
20. Parts identification				
21. Warranty information				
22. Personnel training requirements				
23. Testing equipment and special tool information				

Remarks: _____

_____
Contractor's Signature

[2]See paragraph 01300-4.0 A, Transmittal Procedure.

01730-B. EQUIPMENT RECORD FORM

EQUIP DESCRIP		EQUIP LOC	
EQUIP NO.	SHOP DWG NO.	DATE INST	COST
MFGR		MFGR CONTACT	
MFGR ADDRESS			PHONE
VENDOR		VENDOR CONTACT	
VENDOR ADDRESS			PHONE

MAINTENANCE REQUIREMENTS	D	W	M	Q	S	A	Hours

LUBRICANTS:	RECOMMENDED:
	ALTERNATIVE:
MISC. NOTES:	

RECOMMENDED SPARE PARTS			
PART NO	QUAN	PART NAME	COST

ELECTRICAL NAMEPLATE DATA			
EQUIP			
MAKE			
SERIAL NO.		ID NO.	
MODEL NO.		FRAME NO.	
HP	V	AMP	HZ
PH	RPM	SF	DUTY
CODE	INSL. CL	DES	TYPE
NEMA DES	C AMB	TEMP RISE	RATING
MISC.			
MECHANICAL NAMEPLATE DATA			
EQUIP			
MAKE			
SERIAL NO.		ID NO.	
MODEL NO.		FRAME NO.	
HP	RPM	CAP	SIZE
TDH	IMP SZ	BELT NO.	CFM
PSI	ASSY NO.	CASE NO.	

01730-C. EQUIPMENT RECORD FORM

EQUIP DESCRIP		EQUIP LOC	
EQUIP NO.	SHOP DWG NO.	DATE INST	COST
MFGR		MFGR CONTACT	
MFGR ADDRESS			PHONE
VENDOR		VENDOR CONTACT	
VENDOR ADDRESS			PHONE

MAINTENANCE REQUIREMENTS	D	W	M	Q	S	A	Hours

09900-A COATING SYSTEM INSPECTION CHECKLIST

09900-A Coating System Inspection Checklist			
Project Name			
Owner		Coating System Manufacturer (CSM)	
General Contractor (GC)		Coating System Applicator (CSA)	
Area or Structure		Location within Structure	
Coating System (eg E-1)		Coating Type (eg Epoxy, etc.)	

Step	Description		Name	Signature	Date
1	Completion of cleaning and substrate decontamination prior to abrasive blast cleaning.	GC QC			
		CSM QC			
		CSA QC			
2	Installation of protective enclosure of structure or area and protection of adjacent surfaces or structures that are not to be coated.	GC QC			
		CSM QC			
		CSA QC			
3	Completion of ambient condition control in structure or building area and acceptance of ventilation methods in structure or Area.	GC QC			
		CSM QC			
		CSA QC			
4	Completion of Surface Preparation for Substrates to Be Coated.	GC QC			
		CSM QC			
		CSA QC			
5	Completion of Primer Application.	GC QC			
		CSM QC			
		CSA QC			

6	Completion of Concrete Repairs If Required and Related Surface Preparation Rework Prior to Coating System Application.	GC QC			
		CSM QC			
		CSA QC			
7	Completion of Concrete Filler/ Surface Application to Concrete.	GC QC			
		CSM QC			
		CSA QC			
8	Completion of First Finish Coat Application and of Detail Treatment at Transitions or Terminations.	GC QC			
		CSM QC			
		CSA QC			
9	Completion of Second Finish Coat Application and of Detail Treatment at Transitions and Terminations.	GC QC			
		CSM QC			
		CSA QC			
10	Completion of Full and Proper Cure of Coating System.	GC QC			
		CSM QC			
		CSA QC			
11	Completion of Testing of Cured Coating System including Adhesion, Holiday (Continuity) Testing and Dry Film Thickness.	GC QC			
		CSM QC			
		CSA QC			
12	Completion of Localized Repairs to Coating System Following Testing.	GC QC			
		CSM QC			
		CSA QC			
13	Final Acceptance of Coating System Installation Including Final Clean-Up Complying with Specification Requirements and the CSM's Quality Requirements.	GC QC			
		CSM QC			
		CSA QC			

11000-A. MANUFACTURER'S INSTALLATION CERTIFICATION FORM

Contract No: _____ Specification section: _____

Equipment name: _____

Contractor: _____

Manufacturer of equipment item: _____

The undersigned manufacturer of the equipment item described above hereby certifies that he has checked the installation of the equipment and that the equipment, as specified in the project manual, has been provided in accordance with the manufacturer's recommendations, and that the trial operation of the equipment item has been satisfactory.

Comments: _____

_____

_____

_____

_____

_____	_____
Date	Manufacturer
	_____
	Signature of Authorized Representative
_____	_____
Date	Contractor
	_____
	Signature of Authorized Representative

11000-B. MANUFACTURER'S INSTRUCTION CERTIFICATION FORM

Contract No: _____ Specification section: _____

Equipment name: _____

Contractor: _____

Manufacturer of equipment item: _____

The undersigned manufacturer certifies that a service engineer has instructed the wastewater treatment plant operating personnel in the proper maintenance and operation of the equipment designated herein.

Operations Check List (check appropriate spaces)	
Start-up procedure reviewed	
Shutdown procedure reviewed	
Normal operation procedure reviewed	
Others:	
Maintenance Check List (check appropriate spaces)	
Described normal oil changes (frequency)	
Described special tools required	
Described normal items to be reviewed for wear	
Described preventive maintenance instructions	
Described greasing frequency	
Others:	

_____ _____
Date Manufacturer

_____
Signature of Authorized Representative

_____ _____
Date Signature of Owner's Representative

_____ _____
Date Signature of Contractor's Representative

11000-C. UNIT RESPONSIBILITY CERTIFICATION FORM

(Project Title)

CERTIFICATE OF UNIT RESPONSIBILITY
for Specification Section _____

(Section title)

In accordance with paragraph 11000-1.02 C of the contract documents, the undersigned manufacturer of driven equipment ("manufacturer") accepts unit responsibility for all components of equipment furnished to the Project under specification Section_____ , and for related equipment manufactured under Sections_____, _____, and _____ .

We have reviewed the requirements for Sections 11000 (and 11050 where applicable) and all sections referencing this (these) section(s), including but not limited to drivers, supports for driving and driven equipment and all other specified appurtenances to be furnished to the Project by manufacturer. And, we have further reviewed, and modified as necessary, the requirements for associated variable speed drives and motor control centers. We hereby certify that all specified components are compatible and comprise a functional unit suitable for the specified performance and design requirements whether or not the equipment was furnished by us. We will make no claim nor establish any condition that problems in operation for the product provided under this specification Section _____ are due to incompatibility of any components covered by this Certificate of Unit Responsibility. Nor will we condition or void any warranty for the performance of the product of this specification Section _____ due to incompatibility of any components covered under this Certificate of Unit Responsibility.

Our signature on this Certificate of Unit Responsibility does not obligate us to take responsibility for, nor to warrant the workmanship, quality, or performance of related equipment provided by others under specification Sections _____, _____, and _____. Our obligation to warranty all equipment provided by us shall remain unaffected.

Notary Public	Name of Corporation
Commission expiration date	Address
Seal:	By: _____ Duly Authorized Official
	Legal Title of Official
	Date: _____

11002-A. RIGID EQUIPMENT MOUNT INSTALLATION CHECKLIST

(CLIENT, PROJECT NAME)

Equipment Tag No.: _____ Date: _____

Grout Product Name and Type: _____

Grouting System Manufacturer: _____

Grouting Application Contractor: _____

General Contractor: _____

Step 1: Verify Equipment Anchor Installation Conformance to Equipment Pad Details

Name: _____ Date___/___/___
Contractor Rep.

Name: _____ Name: _____
Engineer Millwright

Step 2: Completion of Cleaning and Concrete Substrate Preparation Prior to Grouting

Name: _____ Date___/___/___
Contractor Rep.

Name: _____ Name: _____
Engineer Grouting Contractor Rep.

Name: _____
Grout Manufacturer's Technical Rep.

Step 3: Equipment Leveling

Name: _____ Date___/___/___
Contractor Rep.

Name: _____ Name: _____
Engineer Millwright

Step 4: **Installation of Protection of Adjacent Surfaces or Structures NOT TO BE GROUTED**

Name: _____ Date___/___/___
Contractor Rep.

Name: _____ Name: _____
Engineer Grouting Contractor Rep.

Name: _____
Grout Manufacturer's Technical Rep.

Step 5: **Preparation and Construction of Forms and Epoxy Grout Filling Standpipes**

Name: _____ Date___/___/___
Contractor Rep.

Name: _____ Name: _____
Engineer Grouting Contractor Rep.

Name: _____
Grout Manufacturer's Technical Rep.

Step 6: **Completion of Ambient Condition Control in Structure or Building Area and Acceptance of Ambient Conditions as They Apply to Application and Curing Requirements for the Grouting System**

Name: _____ Date___/___/___
Contractor Rep.

Name: _____ Date___/___/___
Grouting Contractor Rep.

Name: _____ Date___/___/___
Grout Manufacturer's Technical Rep.

Name: _____ Date___/___/___
Engineer

Step 7: **Epoxy Grout Installation**

Name: _____ Date___/___/___
Contractor Rep.

Name: _____ Name: _____
Engineer Grouting Contractor Rep.

Name: _____
Grout Manufacturer's Technical Rep.

Step 8: **Completion of Full and Proper Cure of Epoxy Grout**

Name: _____ Date___/___/___
Contractor Rep.

Name: _____ Date___/___/___
Grouting Contractor Rep.

Name: _____ Date___/___/___
Grout Manufacturer's Technical Rep.

Name: _____ Date___/___/___
Engineer

Step 9: **Completion of Localized Repair of Grout Voids**

Name: _____ Date___/___/___
Contractor Rep.

Name: _____ Date___/___/___
Grouting Contractor Rep.

Name: _____ Date___/___/___
Grout Manufacturer's Technical Rep.

Name: _____ Date___/___/___
Engineer

Step 10: **Final Acceptance of Grouting System Installation Including Final Clean-Up of the Work Site Complying with All Specification Requirements and the GSM's Quality Requirements**

Name: _____ Date___/___/___
Contractor Rep.

Name: _____ Date___/___/___
Grouting Contractor Rep.

Name: _____ Date___/___/___
Grout Manufacturer's Technical Rep.

Name: _____ Date___/___/___
Engineer

11060-A. MOTOR DATA FORM

Equipment Name: _____ Equipment No(s): _____

Project Site Location: _____

Nameplate Markings

Mfr:		Mfr Model:		Frame:		Horsepower:	
Volts:		Phase:		RPM:		Service Factor:	
FLA:		LRA:		Frequency:		Amb Temp Rating:	ºC
Time rating:				Design Letter:			
	(NEMA MG1-10.35)				(NEMA MG-1.16)		
KVA Code Letter:				Insulation Class:			

The following information is required for explosion-proof motors only:

A. Approved by UL for installation in Class _____, Div _____, Group _____

B. UL frame temperature code ____ (NEC Tables 500-8B)

The following information is required for all motors 1/2 horsepower and larger:

A. Guaranteed minimum efficiency _____
(Paragraph 11060-2.04 G)

B. Nameplate or nominal efficiency _____

Data Not Necessarily Marked on Nameplate

Type of Enclosure:			Enclosure Material:		
Temp Rise:	ºC (NEMA MG1-12.41,42)				
Space Heater included?	☐ Yes	☐ No	If Yes:	Watts	Volts
Type of motor winding over-temperature protection, if specified:					

Provide information on other motor features specified:

_____

A. WIRE AND CABLE RESISTANCE TEST DATA FORM

Wire or Cable No.:_____ Temperature, ^{o}F: _____

Location of Test	Insulation resistance, megohms
1.	
2.	
3.	
4.	
5.	
6.	
7	

.

CERTIFIED _____ Date _____
Contractor's Representative

WITNESSED _____ Date _____
Owner's Representative

16000-B. INSTALLED MOTOR TEST FORM

Motor Equipment Number: _____ Date of test: _____

Equipment Driven: _____

MCC Location: _____

					Ambient temp	°F
Resistance:						
Insulation resistance phase-to-ground megohms:						
Phase A		Phase B		Phase C		
Current at Full Load:						
Phase			Current, amps			
Phase			Current, amps			
Phase			Current, amps			
Thermal Overload Device:	Manufacturer/catalog #			Amperes		
Circuit breaker (MCP) setting:						

Motor Nameplate Markings:

Mfr		Mfr Model		Frame		HP	
Volts		Phase		RPM		Service factor**	
Amps		Freq		Ambient temp rating		°C	
Time rating				Design letter**			
	(NEMA 1-10.35)				(NEMA MG-1.16)		
Code letter				Insulation class			

**Required for 3-phase squirrel cage induction motors only.

CERTIFIED _____ Date _____
Contractor's Representative

WITNESSED _____ Date _____
Owner's Representative

16000-C. DRY TRANSFORMER TEST DATA FORM

(Note: Use Data Form for dry type transformers with voltage rating of 600 Vac or less and sizes to 167 kVA single phase and 500 kVA three phase. Use NETA Test Forms and Test Procedures for higher voltages and larger transformers.)

Equipment Tag No.: _____ Temperature Rating: _____

Description/Location: _____ Feeder size/Source: _____

Primary Voltage: _____ Secondary Voltage: _____ Winding Connection: _____

A. VISUAL INSPECTION

Transformer Inspection	Pass	Fail	Note
1. Nameplate data as specified			
2. Mechanical condition			
a. Free of dents and scratches			
b. Anchored properly			
c. Shipping brackets removed			
d. Spacing from wall per nameplate			
3. Grounding *			
a. Equipment grounding			
b. System grounding			

B. INSULATION-RESISTANCE TESTS:

Perform tests with calibrated megohmeter. Apply 1000 Vdc test voltage for 60 seconds and record readings in megohms at 30-seconds and 60-seconds intervals.

Test Group	Resistance between		30-second reading	60-second reading	Absorption Ratio Index 60-sec. / 30-sec.
Primary Winding to ground	A	GRD			
	B	GRD			
	C	GRD			
Secondary Winding to ground with * N-G Bond removed	a	GRD			
	b	GRD			
	c	GRD			
Primary Winding to Secondary Winding	A	a			
	B	b			
	C	c			

Submit resistance readings to the Engineer immediately after the tests that are less than the manufacturer's recommended value or less than 10-megohms. Record the Absorption Ratio Index values for future reference. Ratio must be 1.0 or greater, with infinity (∞) equal to 1.0.

Contractor Representative Certified: _____ Date _____

Owner Representative Witnessed:_____ Date _____

16000-D. MOTOR CONTROL CENTER TEST FORM

Equipment No.: _____ Ambient room temperature: _____

Location: _____

A. MECHANICAL CHECK:

All bolted connections either bus to bus or cable to bus shall be torqued to the manufacturer's recommendations.

B. ELECTRICAL TESTS:

1. Measure insulation resistance of each bus section phase to phase and phase to ground for 1 minute using a megohmmeter at 1000 volts.

Test results (megohms)			
Phase		Phase	
A-GRD		A-B	
B-GRD		B-C	
C-GRD		C-A	

2. Set the circuit breaker in the starter unit to comply with the requirements of NEC, Article 430-52 and Table 430-152.

3. Motor overload heater elements shall be sized and installed based on the actual nameplate full load amperes of the motor connected to the starter.

CERTIFIED _____ Date _____
Contractor's Representative

WITNESSED _____ Date _____
Owner's Representative

16000-E. PROTECTIVE RELAY TEST FORM

Location: _____

Switchgear Breaker No.: _____

Protective Relay Description: _____

The protective relays shall be tested in the following manner:

1. Each protective relay circuit shall have its insulation resistance tested to ground.

2. Perform the following tests on the specified relay setting:

   a. Pickup parameters on each operating element.

   b Timing test shall be performed at three points on the time dial curve.

   c. Pickup target and seal-in units.

The results shall be recorded and signed. A copy shall be given to the Engineer in accordance with paragraph 16000-1.05 B.

16000-F. LOW VOLTAGE SWITCHGEAR TEST FORM

Equipment No.: _____

Location: _____

Room Temperature: _____

The protective devices shall be set in accordance with the specification before the tests are performed.

1. Measure contact resistance (micro-ohms).

Phase:	A		B		C	

Contacts shall be replaced if resistance exceeds 50 micro-ohms.

2. Perform an insulation resistance test (1000 volts DC for 1 minute).

Phase	A		B		C		
Pole to ground							megohms
Across open pole							megohms
Pole to pole	AB		BC		CA		megohms

3. Minimum pickup current shall be determined by primary current injection.

4. Long time delay shall be determined by primary injection at three hundred percent (300%) pickup current.

5. Short time pickup and time delay shall be determined by primary injection of current.

6. Instantaneous pickup current shall be determined by primary injection.

7. Trip unit reset characteristics shall be verified.

8. Auxiliary protective devices, such as ground fault or under voltage relays, shall be activated to ensure operation of shunt trip devices.

17000-A. LOOP WIRING AND INSULATION RESISTANCE TEST DATA FORM

Loop No.: _____

List all wiring associated with a loop in table below. Make applicable measurements as indicated after disconnecting wiring.

Wire No.	Panel Tie	Field TB	Continuity Resistance[a]		Insulation Resistance[b]			
			Cond./ Cond.	Cond./ Shield	Shield/ Gnd.	Shield/ Cond.	Cond./ Gnd.	Shield/ Shield
A			--	(A/SH)				
B			(A/B)	--				
C			(A/C)	--				
D			(A/D)	--				
etc.								

NOTES:

a. Continuity Test. Connect ohmmeter leads between wires A and B and jumper opposite ends together. Record resistance in table. Repeat procedure between A and C, A and D, etc. Any deviation of ±2 ohms between any reading and the average of a particular run indicates a poor conductor, and corrective action shall be taken before continuing with the loop test.

b. Insulation Test. Connect one end of a 500 volt megger to the panel ground bus and the other sequentially to each completely disconnected wire and shield. Test the insulation resistance and record each reading.

CERTIFIED _____ Date _____
Contractor's Representative

WITNESSED _____ Date _____
Owner's Representative

17000-B. CONTROL CIRCUIT PIPING LEAK TEST FORM

Loop No.:_____

List tubing associated with loop in table below. Make applicable measurements after isolating any air consuming pilots from circuit.

Tube No.	Tubing Equivalent Length of 1/4-Inch Copper[a]	Test Period (seconds)	Permitted Pressure Drop (psi)[b]	Measured Pressure Drop (psi)
A				
B				
C				
D				
etc.				

NOTES:

a. Convert actual tubing and air motor volume to equivalent 1/4-inch copper tubing.

b. Pressure drop shall not exceed 1 psi per hundred feet 1/4-inch tubing per 5 seconds.

CERTIFIED _____ Date _____
Contractor's Representative

WITNESSED _____ Date _____
Owner's Representative

17000-C. CONTROLLER CALIBRATION TEST DATA FORM

Tag No. and Description: _____

Make & Model No.: _____ Serial No.: _____

Input: _____ Process Variable (PV) Scale: _____

Output: _____ Output Scale: _____

PV Scale Calibration

% of Range	Input	Expected Reading	Actual Reading	% Deviation
0				
50				
100				
			% Deviation Allowed:	

Connect output to PV for following tests:

Set Point (SP) Indicator Accuracy			Output Meter Accuracy			Controller Accuracy		
SP	PV Reading	Expected % Dev.	Actual Reading	Expected Reading	Actual % Dev.	Output	Output	% Dev.
(0%)								
(50%)								
(100%)								
% Deviation Allowed:			% Deviation Allowed:			% Deviation Allowed:		

CERTIFIED _____ Date _____
Contractor's Representative

WITNESSED _____ Date _____
Owner's Representative

17000-D. PANEL INDICATOR CALIBRATION TEST DATA FORM

Tag No. and Description: _____

Make & Model No.:_____ Serial No.:_____

Input: _____

Scale: _____ Range: _____

PV Scale Calibration

% of Range	Input	Expected Reading	Actual Reading	% Deviation
0				
50				
100				
			% Deviation Allowed:	

CERTIFIED _____ Date _____
Contractor's Representative

WITNESSED _____ Date _____
Owner's Representative

17000-E. RECORDER CALIBRATION TEST DATA FORM

Tag No. and Description: _____

Make & Model No.: _____ Serial No.: _____

Input: _____ Chart: _____

Scale: _____ Range: _____

% of Range	Input	Expected Reading	Actual Reading	% Deviation
0				
50				
100				
			% Deviation Allowed:	

CERTIFIED _____ Date _____
Contractor's Representative

WITNESSED _____ Date _____
Owner's Representative

17000-F. SIGNAL TRIP CALIBRATION TEST DATA FORM

Tag No. and Description: _____

Make & Model No.: _____ Serial No.: _____

Input: _____

Scale: _____ Range: _____

Set Point(s): _____

After setting set point(s), run signal input through entire range and calculate deadband.

Set Point	Incr. Input Trip Point	Decr. Input Trip Point	Calc. Deadband	Required Deadband

CERTIFIED _____ Date _____
Contractor's Representative

WITNESSED _____ Date _____
Owner's Representative

17000-G. FIELD SWITCH CALIBRATION TEST DATA FORM

Tag No. and Description: _____

Make & Model No.: _____ Serial No: _____

Input: _____

Range: _____

Set Point(s): _____

Simulate process variable (flow, pressure, temperature, etc.) and set desired set point(s). Run through entire range of switch and calculate deadband.

Set Point	Incr. Input Trip Point	Decr. Input Trip Point	Calc. Deadband	Required Deadband

CERTIFIED _____ Date _____
Contractor's Representative

WITNESSED _____ Date _____
Owner's Representative

17000-H. TRANSMITTER CALIBRATION TEST DATA FORM

Tag No. and Description: _____

Make & Model No.: _____ Serial No.: _____

Input: _____

Output: _____

Range: _____ Scale: _____

Simulate process variable (flow, pressure, temperature, etc.) and measure output with appropriate meter.

% of Range	Input	Expected Reading	Actual Reading	% Deviation
0				
50				
100				
			% Deviation Allowed:	

CERTIFIED _____ Date _____
Contractor's Representative

WITNESSED _____ Date _____
Owner's Representative

17000-I. MISCELLANEOUS INSTRUMENT CALIBRATION TEST DATA FORM

(For instruments not covered by any of the preceding test forms, the Contractor shall create a form containing all necessary information and calibration procedures.)

CERTIFIED _____ Date _____
Contractor's Representative

WITNESSED _____ Date _____
Owner's Representative

17000-J. INDIVIDUAL LOOP TEST DATA FORM

Loop No.: _____

Description: (Give complete description of loop's function using tag numbers where appropriate.)

P&ID No.: (Attach copy of P&ID.)

a. Wiring tested:
(Attach test form 17000-A)

b. Instrumentation tubing/piping tested:
(Attach test form 17000-B)

c. Instruments calibrated:
(Attach test forms 17000-C through I)

d. List step-by-step procedures for testing loop parameters. Test loop with instruments, including transmitters and control valves, connected and functioning. If it is not possible to produce a real process variable, then a simulated signal may be used with the Engineer's approval.

CERTIFIED _____ Date _____
Contractor's Representative

WITNESSED _____ Date _____
Owner's Representative

17000-K. LOOP COMMISSIONING TEST DATA FORM

Loop No.: _____

a. Loop tested:
(Attach test form 17000-J)

b. Controlled or connected equipment tests confirmed:

c. Give complete description of loop's interface with process.

d. With associated equipment and process in operation, provide annotated chart trace of loop response to changes in set points for verification of performance. This chart should demonstrate 1/4-amplitude damping as output adjusts to set point change. Show set points, starting and finishing times on chart, as well as any other pertinent data.

Connect 2-pen recorder to process variable (PV) and to controller output. Use 1 inch/second chart speed.

Pen 1 - PV - Connections:

Pen 2 - Output - Connections:

CERTIFIED _____ Date _____
Contractor's Representative

WITNESSED _____ Date _____
Owner's Representative

SECTION 02100

SITE PREPARATION

PART 1—GENERAL

1.1 RELATED DOCUMENTS

Drawings and general provisions of the Contract, including General and Supplementary Conditions and Division 01 Specification Sections, apply to this Section.

1.2 SUMMARY

Section Includes:

1. Protecting existing vegetation to remain.
2. Removing existing vegetation.
3. Clearing and grubbing.
4. Stripping and stockpiling topsoil.
5. Removing above- and below-grade site improvements.
6. Disconnecting, capping or sealing, and removing site utilities
7. Temporary erosion and sedimentation control measures.

Related Sections:

1. Division 01 Sections for temporary utility services, construction and support facilities, security and protection facilities**,** and temporary erosion and sedimentation control measures.
2. Division 01 Section "Demolition and Salvage" for field engineering and surveying.

1.3 DEFINITIONS

A. SUBSOIL:

All soil beneath the topsoil layer of the soil profile, and typified by the lack of organic matter and soil organisms.

B. SURFACE SOIL:

Soil that is present at the top layer of the existing soil profile at the Project site. In undisturbed areas, the surface soil is typically topsoil; but in disturbed areas such as urban environments, the surface soil can be subsoil.

C. TOPSOIL:

Top layer of the soil profile consisting of existing native surface topsoil or existing in-place surface soil and is the zone where plant roots grow.

Top layer of the soil profile consisting of existing native surface topsoil or existing in-place surface soil and is the zone where plant roots grow. Its appearance is generally friable, pervious, and black or a darker shade of brown, gray, or red than underlying subsoil; reasonably free of subsoil, clay lumps, gravel, and other objects more than 2 inches (50 mm) in diameter; and free of subsoil and weeds, roots, toxic materials, or other nonsoil materials.

D. PLANT-PROTECTION ZONE:

Area surrounding individual trees, groups of trees, shrubs, or other vegetation to be protected during construction, and indicated on Drawings.

E. TREE-PROTECTION ZONE:

Area surrounding individual trees or groups of trees to be protected during construction, and defined by a circle concentric with each tree with a radius 1.5 times the diameter of the drip line unless otherwise indicated.

F. VEGETATION:

Trees, shrubs, groundcovers, grass, and other plants.

1.4 MATERIAL OWNERSHIP

Except for stripped topsoil and other materials indicated to be stockpiled or otherwise remain Owner's property, cleared materials shall become Contractor's property and shall be removed from Project site.

1.5 SUBMITTALS

A. EXISTING CONDITIONS:

Documentation of existing trees and plantings, adjoining construction, and site improvements that establishes preconstruction conditions that might be misconstrued as damage caused by site clearing.

1. Use sufficiently detailed photographs or videotape.

2. Include plans and notations to indicate specific wounds and damage conditions of each tree or other plants designated to remain.

B. RECORD DRAWINGS:

Identifying and accurately showing locations of capped utilities and other subsurface structural, electrical, and mechanical conditions.

1.6 QUALITY ASSURANCE

A. PREINSTALLATION CONFERENCE:

Conduct conference at Project site.

1.7 PROJECT CONDITIONS

A. TRAFFIC:

Minimize interference with adjoining roads, streets, walks, and other adjacent occupied or used facilities during site-clearing operations.

1. Do not close or obstruct streets, walks, or other adjacent occupied or used facilities without permission from Owner and authorities having jurisdiction.

2. Provide alternate routes around closed or obstructed traffic ways if required by Owner or authorities having jurisdiction.

B. IMPROVEMENTS ON ADJOINING PROPERTY:

Authority for performing site clearing indicated on property adjoining Owner's property will be obtained by Owner before award of Contract.

1. Do not proceed with work on adjoining property until directed by Architect.

C. SALVABLE IMPROVEMENTS:

Carefully remove items indicated to be salvaged and store on Owner's premises where indicated.

D. UTILITY LOCATOR SERVICE:

Utilize a utility locator service for area where Project is located before site clearing.

Do not commence site clearing operations until temporary erosion and sedimentation control and plant-protection measures are in place.

The following practices are prohibited within protection zones:

1. Storage of construction materials, debris, or excavated material.

2. Parking vehicles or equipment.

3. Foot traffic.

4. Erection of sheds or structures.

5. Impoundment of water.

6. Excavation or other digging unless otherwise indicated.

7. Attachment of signs to or wrapping materials around trees or plants unless otherwise indicated.

Do not direct vehicle or equipment exhaust towards protection zones.

Prohibit heat sources, flames, ignition sources, and smoking within or near protection zones.

E. SOIL STRIPPING, HANDLING, AND STOCKPILING:

Perform only when the topsoil is dry or slightly moist.

PART 2—PRODUCTS

2.1 NOT APPLICABLE

PART 3—EXECUTION

3.1 PREPARATION

Protect and maintain benchmarks and survey control points from disturbance during construction.

Locate and clearly identify trees, shrubs, and other vegetation to remain.

Protect existing site improvements to remain from damage during construction.

1. Restore damaged improvements to their original condition, as acceptable to Owner.

3.2 TEMPORARY EROSION AND SEDIMENTATION CONTROL

Provide temporary erosion and sedimentation control measures to prevent soil erosion and discharge of soil-bearing water runoff or airborne dust to adjacent properties and walkways, according to erosion and sedimentation control Drawings and requirements of authorities having jurisdiction.

Verify that flows of water redirected from construction areas or generated by construction activity do not enter or cross protection zones.

Inspect, maintain, and repair erosion and sedimentation control measures during construction until permanent vegetation has been established.

Remove erosion and sedimentation controls and restore and stabilize areas disturbed during removal.

3.3 TREE AND PLANT PROTECTION

A. GENERAL:

Protect trees and plants remaining on-site according to requirements in Division 01 Section "Temporary Tree and Plant Protection."

Repair or replace trees, shrubs, and other vegetation indicated to remain or be relocated that are damaged by construction operations, in a manner approved by Architect.

3.4 EXISTING UTILITIES

Owner will arrange for disconnecting and sealing indicated utilities that serve existing structures before site clearing, when requested by Contractor.

1. Verify that utilities have been disconnected and capped before proceeding with site clearing.

Locate, identify, disconnect, and seal or cap utilities indicated to be removed.

1. Arrange with utility companies to shut off indicated utilities.

2. Owner will arrange to shut off indicated utilities when requested by Contractor.

Locate, identify, and disconnect utilities indicated to be abandoned in place.

A. INTERRUPTING EXISTING UTILITIES:

Do not interrupt utilities serving facilities occupied by Owner or others unless permitted under the following conditions and then only after arranging to provide temporary utility services according to requirements indicated:

1. Notify Owner not less than two days in advance of proposed utility interruptions.

2. Do not proceed with utility interruptions without Owner's written permission.

Excavate for and remove underground utilities indicated to be removed.

Removal of underground utilities as included on the drawings.

3.5 CLEARING AND GRUBBING

Remove obstructions, trees, shrubs, and other vegetation to permit installation of new construction.

1. Do not remove trees, shrubs, and other vegetation indicated to remain or to be relocated.

2. Grind down stumps and remove roots, obstructions, and debris to a depth of 18 inches (450 mm) below exposed subgrade.

3. Use only hand methods for grubbing within protection zones.

4. Chip removed tree branches and stockpile in areas approved by Construction Manager.

Fill depressions caused by clearing and grubbing operations with satisfactory soil material unless further excavation or earthwork is indicated.

1. Place fill material in horizontal layers not exceeding a loose depth of 8 inches (200 mm), and compact each layer to a density equal to adjacent original ground.

3.6 TOPSOIL STRIPPING

Remove sod and grass before stripping topsoil.

Strip topsoil to depth of 6 inches (150 mm) in a manner to prevent intermingling with underlying subsoil or other waste materials.

1. Remove subsoil and non-soil materials from topsoil, including clay lumps, gravel, and other objects more than 2 inches (50 mm) in diameter; trash, debris, weeds, roots, and other waste materials.

Stockpile topsoil away from edge of excavations without intermixing with subsoil. Grade and shape stockpiles to drain surface water. Cover to prevent windblown dust and erosion by water.

1. Limit height of topsoil stockpiles to 72 inches (1800 mm).

2. Do not stockpile topsoil within protection zones.

3. Dispose of surplus topsoil. Surplus topsoil is that which exceeds quantity indicated to be stockpiled or reused.

4. Stockpile surplus topsoil to allow for re-spreading deeper topsoil.

3.7 SITE IMPROVEMENTS

Remove existing above- and below-grade improvements as indicated and necessary to facilitate new construction.

Remove slabs, paving, curbs, gutters, and aggregate base as indicated.

1. Unless existing full-depth joints coincide with line of demolition, neatly saw-cut along line of existing pavement to remain before removing adjacent existing pavement. Saw-cut faces vertically.

2. Paint cut ends of steel reinforcement in concrete to remain with two coats of antirust coating, following coating manufacturer's written instructions. Keep paint off surfaces that will remain exposed.

3.8 DISPOSAL OF SURPLUS AND WASTE MATERIALS

Remove surplus soil material, unsuitable topsoil, obstructions, demolished materials, and waste materials including trash and debris, and legally dispose of them off Owner's property.

Separate recyclable materials produced during site clearing from other non-recyclable materials. Store or stockpile without intermixing with other materials and transport them to recycling facilities. Do not interfere with other Project work.

END OF SECTION

SECTION 02140

DEWATERING

PART 1--GENERAL

1.01 DESCRIPTION

Construct all permanent Work in areas free from water. Design, construct and maintain all dewatering systems, dikes, levees, cofferdams and diversion and drainage channels as necessary to maintain the areas free from water and to protect the areas to be occupied by permanent work from water damage. Remove temporary works after they have served their purpose.

The Contractor shall be responsible for the stability of all temporary and permanent slopes, grades, foundations, materials and structures during the course of the Contract. Repair and replace all slopes, grades, foundations, materials and structures damaged by water, both surface and subsurface, to the lines, grades and conditions existing prior to the damage at no additional cost to the Owner.

1.02 SUBMITTALS

Before dewatering commences, the Contractor shall submit plans of the proposed dewatering system for the Engineer's review. The dewatering system plans shall be in sufficient detail to indicate power source, sizes of pumps, piping, appurtenances, placement of wells, and the ultimate disposal point for water.

Review of the dewatering plans by the Engineer in no way relieves the Contractor of complete responsibility for providing effective and safe dewatering of the construction area and/or pipeline under construction.

The control of groundwater shall be such that softening of the bottom of excavations or formation of "quick" conditions or "boils" do not occur. Dewatering systems shall be designed and operated to prevent removal of the natural soils.

Dewatering system submittal shall demonstrate coordination with the designed shoring and bracing method and submittal.

PART 2--PRODUCTS (NOT USED)

PART 3--EXECUTION

3.01 DEWATERING

A. GENERAL:

The Contractor shall furnish, install, and maintain all pumping, ditching or other approved measures for the removal of groundwater or exclusion of water, including stormwater and wastewater reaching the site of the work from any source, so as to prevent damage to the work or adjoining property. The intent of this requirement is that the Contractor shall at his cost provide all dewatering facilities required to enable pipe and structure installation in excavations that are free from standing or flowing water.

Dewatering shall control subsurface water as well as surface water.

The dewatering system shall meet all the following minimum requirements:

1. Provide stable excavation walls and bottom.

2. Provide reasonably dry base of excavation.

3. Filter native material and prevent loss of soil through piping.

4. Preserve the undisturbed bearing capacity of the subgrade soils at the bottom of the excavation.

5. Where shoring is not designed to resist hydrostatic pressure, the dewatering system shall draw down the groundwater level below and beyond the excavation sidewalls.

6. Contractor shall provide monitoring wells located midway between dewatering points to demonstrate that groundwater level is lowered as required.

Excavations shall be continuously dewatered to maintain a ground water level no higher then 3 feet below the lowest point in the excavation to maintain the undistrubed state of natural soils and allow the placement of any fill to the specified density. Install a minimum of two piezometers at each excavation to monitor actual elevation of groundwater table below subgrade.

The Contractor shall obtain any and all permits required in conjunction with their dewatering operations and shall meet all permit requirements.

B. NOISE:

For dewatering pumping outside normal working hours, engines shall be equipped and/or shielded in a manner to keep noise to a minimum. Testing may be required to show compliance with local ordinances. The Contractor shall conduct all work to minimize the impact of construction noise on nearby residential neighborhoods. Local noise ordinances will be enforced.

The noise level from the Contractor's operations shall not exceed the requirements contained in Division 1.

Diesel generators shall not be utilized unless they are provided with sound barriers or enclosures, as necessary to comply with local ordinances.

When the temporary works will not adversely affect any item of permanent work or the planned usage of the Project, the Contractor may be permitted to leave such temporary works in place. In such instances, breaching of dikes, levees and cofferdams may be required. Dewatering wells may be filled with concrete in lieu of removal at the sole discretion of the Engineer.

3.02 CARE OF WATER

Disposal of water shall not damage property or create a public nuisance.

Dewatering piping shall not interfere with traffic. Under no circumstances shall dewatering water be allowed to flood streets or otherwise cause hazardous conditions for traffic.

Dewatering system discharge water shall not be released offsite unless properly treated. Refer to the Erosion and Sediment Control Plan drawings for details. Contractor shall submit to Construction Manager for approval the details of the intended method of silt removal.

Contractor shall not drain water into pipeline under construction nor an existing sanitary sewer unless written approval is obtained from the owner of said sanitary sewer.

After construction, the Contractor shall clean all storm drains affected by his operations to the satisfaction of the Construction Manager.

Any damage resulting from the dewatering operations shall be the responsibility of the Contractor and shall be repaired in a manner satisfactory to the Construction Manager, at the Contractor's expense.

The Contractor shall protect foundation supporting soils to prevent deterioration due to water. If deterioration occurs, the Contractor shall be responsible to restore and repair damage in a manner satisfactory to the Construction Manager, at the Contractor's expense.

END OF SECTION

SECTION 02200

EARTHWORK

PART 1—GENERAL

1.01 RELATED DOCUMENTS

The General Conditions, Supplementary Conditions, and General Requirements (Division 1) apply to the work specified in this section.

1.02 SCOPE

Furnish labor, materials, and equipment to complete all work herein described including stripping and stockpiling topsoil, grading, excavation and backfilling required for site work, and temporary grading or ditching and silt control to protect the site and adjoining property from water and silt damage.

The Contractor shall visit the site and familiarize himself with existing conditions.

1.03 WORK INCLUDED

Trees designated to remain shall be boxed and protected from damage during grading operations in the manner specified.

Any trees in the graded area that are at grade level or where the fill is not over two feet (2'-0") may be left at the option of the Architect.

Fill material placed against drainage structures or backfilled around utility pipes shall be placed and compacted by methods which will not cause any damage. Any damage which does occur shall be repaired or replaced by the Contractor at his own expense.

Graded Areas: Any settlement or washing that occurs prior to acceptance of the work shall be repaired and grades reestablished to the required elevations and slopes. Fill to required subgrade levels any areas where settlement occurs.

Temporary Grading and Drainage: The Contractor shall provide effective drainage for the entire site at all times. Watersheds shall be diverted by ditching or embankments to prevent encroachment of surface water in excavations. No impoundment of water will be permitted except as provided. Pools, puddles or inundated excavations shall be drained immediately. The Contractor shall be fully responsible for any and all water damage to the site or to the installed work.

The Contractor shall perform all grading, machine rough, finish and hand to the grade line shown on the drawings.

Miscellaneous Excavation for all Service Trenches and Storm Water Drains: Where excavations are made below depth required for footings or any bearing work, the Contractor shall

fill to grade established with 2,000 pound concrete or if approved by the Soils Consultant, the Contractor may substitute compacted earth or gravel fill as specified by the Soils Consultant.

All suitable material from grading and excavation shall be used insofar as practicable in fills, embankments, subgrades, slopes, and shoulders and for such other purposes as directed by the Architect.

All unsuitable material and rock from grading and excavations shall be stored of onsite as designated by the Owner. When so directed by the Owner, the Contractor will remove unsuitable material and rock from the site. In this case, the disposal cost is covered via the Owner's allowance. Contractor to supply manifest for all unsuitable material and rock removed from the site.

Locate storage sheds, temporary offices and stockpile topsoil to best advance progress of work, and as approved by the Architect.

Provide all layout for construction.

1.04 SUBSURFACE SOIL DATA

A subsurface investigative report for the site is available from the Architect for review by the Contractor. However, the Architect makes no representation as to the accuracy, sufficiency, or completeness of this report. This investigative report was developed solely for design purposes and is not intended to provide information for construction activities. The report is provided only for information and convenience of bidders and is not part of the contract documents. The Contractor may, at his own expense and upon written approval of the Architect, conduct additional subsurface borings and exploration. No claims for extra compensation or extension of time will be considered based on the Contractor's assumptions.

PART 2—PRODUCTS

2.01 MATERIALS

A. ENGINEERING EQUIPMENT:

Surveyor's transit and measuring devices properly calibrated to accurately lay out the work shall be used.

B. OTHER LAYOUT EQUIPMENT:

Provide stakes and batter boards of size and quality commensurate with function. Use wire or non-stretching cord to establish reference lines for site clearing and grading.

C. PROTECTION MATERIALS:

Materials used to protect trees and other existing work shall be treated wood, or exterior plywood, of size, strength, and extent to provide protection of existing work remaining. Refer to Paragraph 3.03 of the section, CLEARING.

PART 3—EXECUTION

3.01 LAYOUT

A. STAKING:

Contractor shall be responsible for all grade stakes and line stakes during the grading and filling operations, resetting all grade stakes and line stakes destroyed.

3.02 TOPSOIL

After all clearing and disposal is complete, the Contractor shall strip from the top of the existing ground all topsoil in all areas to be graded. Stockpile in approved locations where it will not interfere with building or utility operations. Topsoil shall be free from subsoil, debris and stones larger than 2" in diameter. The Architect will designate location of stockpiles. At completion of work, the topsoil will be distributed over the grounds by the Contractor to form a minimum cover of 4 inches on graded areas and other areas indicated by the Architect. Scarify subgrade prior to spreading topsoil.

3.03 GRADING

Perform exterior grading in accordance with the drawings to ease contours sloping away from the building from all sides. In all cases, provide grades of sufficient pitch to drain water from the area.

Grades not otherwise indicated shall be uniform levels of slopes between points where elevations are given or between such points and existing finished grades.

A. MODIFICATIONS:

The plans indicate the levels, slopes and contours which are desired as a finish grade for the entire site. If slight modifications are required to obtain adequate drainage, the Contractor shall make these modifications without extra cost to the Owner.

B. GRADES:

Cut, place, compact fill and grade entire project area within the Limit of Work to subgrades with a vertical tolerance not to exceed 0.5 feet above or below established subgrade as follows:

1. For building area to subgrades below finished floor slabs as shown on structural and foundation ground floor plan.

2. For parking areas and drives to subgrades required to achieve finished paving grades shown on the drawings.

3. For lawn areas, concrete walks and planted areas, to 6" below finished grades as shown on drawings.

3.04 EARTH EXCAVATION

All excavations shall be made to depths shown on drawings with allowance made for sub-floor fill, paving floor slabs, forms and for space to apply water-proofing and damp-proofing. Bottoms for piers and footings shall be level, clean and clear of loose material, lower sections true to size, and all corners cut square. All footings shall rest on original earth or structural fill as hereinafter specified and shall be stepped where changes in elevation are required. Footing trenches shall be cut to exact size of concrete, if practical, except where blasting or caving causes trench to be larger, in which case wood forms shall be used.

All excavations shall be kept free of water at all times. All mud from any excavation caused by standing water or mud within the existing pond must be completely removed before the placing of any permanent material. Where necessary, the water table shall be maintained at a level 3'-0" below the deepest excavation. No excavation shall be made to full depth when freezing temperatures may be expected. Protect excavation bottom from frost if placing of concrete or gravel is delayed. All footing excavations shall be completely free of pin roots. Attention is directed to soil investigation report available to Contractor.

The dewatering process shall be conducted in a manner to properly drain and protect all improvements. Water shall be conducted by pipes, hoses or ditches to a point on the site that will allow it to drain freely into the natural drainage areas.

Remove rock, if encountered, to a depth of 6" below pavement base, 6" below and 6" each side of pipes in utility trenches and 1'-0" below finished grade in areas to receive landscaping and grassing.

3.05 ROCK EXCAVATION

"Mass rock" as used herein shall be defined as follows:

1. Material that cannot be broken and removed by power shovels of one (1) cubic yard capacity;

2. Which cannot be excavated except by drilling or blasting;

3. Which is hard enough to ring when struck with a hammer, and the amount of solid stone shall not be less than one (1) cubic yard in volume; and

4. Which cannot be broken with a heavy single-toothed ripper pulled by the equivalent of a Caterpillar D-8 tractor with a minimum draw bar pull of 56,000 pounds or by the equivalent of a Caterpillar 977 front end loader.

"Trench rock" shall be defined as follows:

1. Material that occurs in a utility trench;

2. Material that is more than 1/2 cubic yard in volume; and

3. Which cannot be excavated by the equivalent of a Caterpillar 215 backhoe having a bucket curling force of not less than 24,700 pounds.

When rock is encountered, clear away earth and notify the Engineer and Construction Manager. Engineer and Construction Manager will inspect material and issue written instructions. No rock excavation shall be done without written instructions.

All blasting shall be done pursuant to Section 02211 Part 3.04 and in accordance with local ordinances, and permits must be obtained where required by law. All blasting shall be completed before any building footing is poured. If blasting is to occur, a plan shall be submitted to the Engineer and Construction Manager for approval prior to commencement of work. Rock that is removed shall become the property of the Contractor and shall be removed from the site and/or buried as allowed by the specifications.

Rock may be used for rip-rap and erosion control as required by the plans provided it meets the specifications for rip rap.

Excavate rock to 6" below bottom of building slabs and footings, pavement, and piping.

Measurement for Rock Excavation shall be as follows:

1. Mass Rock:

   a. Measurement for mass rock shall be made by taking cross-sections or by other means identifying the contours of rock before and after removal.

   b. Rock removed before measurement shall not receive compensation.

   c. The quantity of rock shall be calculated using the following limits:

      1) To top of rock
      2) To 1'-0" below finished grade of roadway
      3) To vertical lines at back of curb
      4) To 1'-0" below foundations and footings
      5) To vertical faces located 1'-0" horizontal distance from each footing or foundation face
      6) To 6" below bottom of slabs on grade
      7) To finish grade in cut where rock is removed to finish grade. Where it is not so removed, to the finish rock surface.

2. Trench Rock:

   a. Measurement for trench rock shall be made by taking level readings at reasonable intervals but not more than ten feet along the exposed trench length before removal of rock.

   b. Rock removed before measurement shall not receive compensation.

c. The quantity of rock shall be calculated using the following limits:

1) To top of rock
2) To vertical faces 1'-0" beyond the outside of pipe barrel, each side
3) To 6" below the pipe barrel for the full trench width
4) To vertical faces 1'-0" horizontal distance beyond structures and manholes
5) To 6" below bottom of slab for structures

3.06 EXCAVATION EMBANKMENT AND BRACING

The Contractor shall accept full responsibility for all excavations. He shall protect all excavation embankments against collapse. Where possible, embankments over 5'-0" high shall be made at a slope not greater than 2:1 unless a steeper slope is recommended by a Registered Soils Engineer.

Where it is not possible to provide a safe embankment slope, all banks shall be temporarily supported and maintained secure until permanent support has been provided.

Where ditches and trenches are over 5'-0" deep, cross bracing and shoring shall be provided to prevent collapse. The Contractor shall comply with OSHA specifications latest revision for Trenching and Excavation. The Contractor must provide proof of an OSHA Certified Competent person, as defined in the latest revision of Trenching and Excavation.

The Contractor shall provide bracing systems designed by a Registered Engineer experienced in such designs and acceptable to the Owner. The design drawings shall show the work and sequence in its entirety and shall be submitted to the Owner prior to commencing the work.

Where no specific information is available, the bracing system shall be designed to resist the active earth pressures as set forth in the CRSI Design Handbook, Volume II, latest edition.

To prevent caving, or settlement of earth adjacent to excavations, and for the protection of persons as well as property, shoring, bracing, and other similar work shall be provided and installed to meet the conditions in each particular case and shall be left in place until construction has reached a point where backfills behind walls or in ditches have been made and the need for shoring and bracing eliminated.

3.07 FOUNDATION TEST BORINGS

The Owner shall obtain a Soils Testing Lab who shall furnish all labor and material to provide 2" diameter earth auger borings in foundation trenches for the retaining wall footings to a depth of 6' 0" below bearing. Borings shall be located and quantities specified as directed by the Engineer and shall not exceed the equivalent of one boring per 50 lineal feet of foundation lines. The bearing shall be verified by a Registered Soils Engineer.

3.08 ADDED EXCAVATIONS

Should the bearings at the levels indicated be found by the Soils Lab to be insufficient, the Engineer may order the excavations carried to proper bearings. Such work shall be classed as additional work, and be compensated from the Owner's allowance shall be adjusted as provided for in the General Provisions.

3.09 FILLING AND BACKFILL

All grading required for subgrade, under floor slabs, paved walks, drives, parking areas and against walls shall be included in the contract. All fills shall be constructed as hereinafter specified.

1. Structural Fill shall be defined as all fill supporting retaining wall footings or any structure whatsoever and extending for a distance of ten feet (10') on each side of said structure measured at the finish grade, thereafter tapering away at a 45 degree angle.

2. Paving Area Fill shall be defined as all fill supporting any asphalt, concrete paving or special paving for parking of cars, or trucks, or concrete walks and extending for a distance of five feet (5') on each side of said area measured at the finished grade, thereafter tapering away at a 45 degree angle.

3. General Area Fill shall be defined as all fill in the general grading area covering banks, lawns, hollows, drain ditches, etc.

When fill is placed against an existing slope, the slope shall be benched to facilitate easier placement, and to "key" the new fill into the existing slope.

3.10 PROOFROLLING

The Contractor is responsible for contacting the Owner / Owner's representative and the Soils Testing Laboratory at least 48 hours in advance of proofrolling.

Areas to receive controlled structural and paving area fill shall be cleared and stripped as herein specified. After removal of existing structures and topsoil, and before placement of any structural and paving area fill, it will be necessary to proofroll that portion of the footing area and paved areas to receive fill to a distance of ten feet (10') beyond the limits. Proofrolling should be accomplished with a loaded 10-ton dump truck with two (2) complete coverages in each of two (2) perpendicular directions. Proofrolling should be accomplished under the observation of the Soils Testing Lab.

Any areas that "pump" under the wheels of the loaded truck should be undercut up to a maximum of three feet in depth and replaced with clean, compacted fill in this contract with no extra cost to the Owner. If pumping continues after the three feet of undercutting, the Soils Engineer shall notify the Engineer immediately and offer his professional recommendations as to the course of further construction. The subgrade for structural and paving area fill shall then be inspected and approved by the Architect before beginning the structural fill and parking area fill operations. After filling to rough grade, the area of the

building should be proofrolled as outlined above. After proofrolling, excavation for footings can be undertaken.

3.11 CONTROLLED STRUCTURAL FILL AND PAVING AREA FILL

In the area of buildings, paving, and retaining walls to be fill supported, a controlled compacted fill is to be installed under the supervision of the Soils Testing Lab. Fill classifications are set forth in Paragraph 3.09, Filling and Backfill.

Prior to fill placement, the site shall be excavated to original material within the new footing area as defined above. Before placement of any structural fill it will be necessary to proofroll the area under the footing as defined above. After the Soils Engineer has approved this work, fill shall be used as approved by the Soils Engineer. All structural fill material shall be approved by Soils Engineer, and same shall have a minimum dry density of 97 pounds per cubic foot, free of organic material, loose rock and frozen earth and shall be placed in 8" loose lifts. Each lift shall be put in under the supervision of the Soils Engineer and shall be compacted to obtain at least 95% of the Standard Proctor maximum dry density under pavement. The upper 8" of soil beneath structures shall be compacted to 98% of the Standard Proctor maximum dry density. In cut areas where in-situ soils do not meet compaction, the area shall be scarified to 1'-0" in depth and recompacted to meet the compaction specification. The Soils Engineer shall make one field compaction test for each 2,000 sq. ft. area for each two-foot lift. If the compaction test of the last two feet does not meet the requirements of the specifications, the fill for that two-foot lift shall be removed and replaced by the Contractor. All soil density tests shall meet ASTM D 698 78.

The Soils Engineer shall make on-site moisture tests. The moisture content shall be within 3% of optimum as determined by ASTM D698-78. The Contractor must obtain written acceptance for any deviations in excess of 3% of optimum moisture content by the Soils Consultant. The Contractor shall perform necessary work to meet these requirements. The Soils Engineer of the Soil Engineering Testing firm may use qualified technical personnel, provided such personnel works under the direct supervision of a Registered Soils Engineer and the Soils Engineer accepts responsibility for the technicians' work.

After the fill has been completed, the Soils Engineer shall certify that the fill has been installed in accordance with the above specifications, and he shall state that in his professional judgment, the fill will safely support the structure provided the bearing of the footings does not exceed the amount shown on the structural drawings. However, the Contractor shall accept full responsibility for the grading operations.

3.12 GENERAL AREA FILL

Areas to receive fill shall be stripped of trees, stumps, and vegetation and topsoil shall be stockpiled before fill is placed. All mud and objectionable material shall be removed and fill material shall be placed in lifts not exceeding 8" in loose measure and shall be compacted to at least 90% of the maximum dry density as determined by the Standard Proctor Compaction Test (ASTM D 698 78). All suitable fill material not required by structural fill areas shall be used in the paving area fill and general fill areas. Grades may be adjusted at the direction of the Architect to achieve the best use of the quantity of material available.

3.13 TESTING OF FILL

Tests of fill in place shall be performed by an approved laboratory provided and paid for by the Owner. Tests shall be made continuously as necessary during the placing and compacting of the fill. Tests shall be made in all fill-in trenches outside of building areas. The Testing Lab will approve fill material before it is placed.

Tests will be made as follows:

1. Structural Fill and Backfill: One test shall be made for each two-foot lift of each 2,000 sq. ft. of area.

2. Paving Area Fill: One test shall be made for each two-foot lift of each 2,000 sq. ft. of area.

3. General Area Fill: One test shall be made for each two-foot lift of each 10,000 sq. ft. of area.

All tests shall be delivered in four (4) copies for distribution: One copy to the Owner, one copy to the Architect, one copy to the Engineer, and one copy to the General Contractor.

3.14 CLEANUP

During the construction and clean-up, debris shall not be dumped on any part of the property or any unauthorized place. All debris, construction material, Contractor's buildings or equipment, logs, stumps, boulders, or any other extraneous material deposited during construction shall be removed from the site. All existing debris or other extraneous material shall be removed from all undisturbed areas and disposed of offsite. Material that is removed from the site shall become the property of the Contractor.

3.15 PROTECTION OF EXISTING TREES REMAINING

Protect tops, trunks, and roots of trees to remain; box, fence or otherwise protect trees which are subject to site work or construction damage. Do not allow heavy equipment or stockpiles within branch spread. Remove interfering branches without injuring trunks. Any cuts, whether accidental or intentional, to the bark or trunk shall be immediately and properly trimmed and painted with a protective tree wound and sealing compound. Remove protection when danger of damage from operations no longer exists. Trees stockpiled shall be protected and maintained by the Contractor until replanted.

3.16 PROTECTION OF ADJACENT PROPERTY

For the duration of the construction and until the Contractor is released, all adjoining property is to be protected from any excessive drainage and debris. Entering upon adjoining property without the permission of said property owner is prohibited.

END OF SECTION

SECTION 02211

ROCK EXCAVATION

PART 1--GENERAL

1.01 DESCRIPTION

A. SCOPE:

This Section specifies removal of subsurface rock encountered during excavation, utilizing mechanical or blasting methods.

B. DEFINITIONS:

All rock is classified. Additional payment shall be due to the Contractor for the removal of rock during the prosecution of this work. See Section 02200 3.05 Rock Excavation for measurement and determination of rock classification.

1.02 QUALITY ASSURANCE

A. REFERENCES:

This section contains references to the following documents. They are a part of this section as specified and modified. Where a referenced document contains references to other standards, those documents are included as references under this section as if referenced directly. In the event of conflict between the requirements of this section and those of the listed documents, the requirements of this section shall prevail.

Unless otherwise specified, references to documents shall mean the documents in effect at the time of Advertisement for Bids or Invitation to Bid (or on the effective date of the Agreement if there were no Bids). If referenced documents have been discontinued by the issuing organization, references to those documents shall mean the replacement documents issued or otherwise identified by that organization or, if there are no replacement documents, the last version of the document before it was discontinued. Where document dates are given in the following listing, references to those documents shall mean the specific document version associated with that date, whether or not the document has been superseded by a version with a later date, discontinued or replaced.

Reference	Title
NFPA 495	Explosive Materials Code, 2001 Edition

B. QUALIFICATIONS:

Seismic Survey Firm – Retain Company specializing in seismic surveys with five years documented experience. Submit name and qualifications.

Explosives – Retain company, firm, subcontractor or individual specializing in explosives for disintegration of rock, with five year documented experience. Submit name and qualifications.

C. REGULATORY REQUIREMENTS:

Conform to applicable State and local codes for explosive disintegration of rock and to NFPA 495 for handling explosive materials.

Obtain permits from authorities having jurisdiction before explosives are brought to site or drilling is started.

D. SCHEDULING:

The Contractor shall schedule blasting work to be completed between the hours of 9 a.m. and 5 p.m. Monday through Friday, excluding holidays.

The Contractor shall schedule work to minimize disruption of vehicular traffic in nearby public thoroughfares.

The Contractor shall coordinate schedule with local police and fire departments, including owners of nearby existing facilities.

PART 2--PRODUCTS

2.01 MATERIALS

Explosives – Type recommended by explosives firm following seismic survey.

Delay Device – Type recommended by explosives firm.

Blast Mat Materials – Type recommended by explosives firm.

PART 3--EXECUTION

3.01 EXAMINATION

The Contractor shall verify site condition and location of nearby buildings, structures and other facilities, recording irregularities, which exist prior to work of this Section.

The Contractor shall verify locations of nearby underground utilities and structures.

3.02 PREPARATION

The Contractor shall identify required lines, levels, contours, and datum; the Contractor shall establish quantity of rock to be removed to meet project requirements.

The Contractor shall conduct survey and document conditions of buildings and structures near locations of rock removal, and prior to blasting, photograph existing conditions identifying existing irregularities.

3.03 ROCK REMOVAL – MECHANICAL METHOD

The Contractor shall excavate and remove rock by mechanical method at locations required by the Contract Documents and when trimming bottom or sides of excavation is necessary to meet project requirements.

The Contractor shall drill holes and utilize expansive tools, wedges, and/or mechanical disintegration compound, as appropriate, to fracture rock.

The Contractor shall cut away rock at bottom of excavation to form level bearing surface for foundations of buildings and structures.

The Contractor shall remove shaley layers to provide sound and unshattered base.

In utility trenches, the Contractor shall trim rock to 4 inches below bottom of installed pipe and 12 inches wider than outside diameter of installed pipe.

3.04 ROCK REMOVAL – BLASTING METHOD

If blasting method is utilized for rock disintegration, the Contractor shall notify the Construction Manager and execute as follows:

1. Advise owners of adjacent buildings, structures and utilities in writing, prior to executing seismographic survey. Explain planned blasting and seismic operations. Allow sufficient time for owners to implement their own protective measures.

2. Obtain a seismic survey prior to rock excavation to determine maximum charges that can be used at different locations in area of excavation without damaging adjacent properties of other work.

3. Prior to blasting, allow time for Construction Manager to take site measurements of rock quantities to be removed.

4. Adequately cover blast area to prevent flyrock. Blast mats or overburden soil are acceptable, but no off-site soil may be imported to be used as overburden.

5. Notify police and fire departments of blasting time schedule.

6. Provide seismographic monitoring during all blasting operations.

7. Disintegrate rock and remove from excavation.

8. Cut away at excavation bottom to form level bearing surface for foundation of buildings and structures.

9. Remove shaled layers to provide a sound and unshattered base.

10. In utility trenches, trim rock to 4 inches below bottom of installed pipe and 12 inches wider than outside diameter of installed pipe.

END OF SECTION

SECTION 02250

AUGERED CAST-IN-PLACE PILES

PART 1—GENERAL

1.01 DESCRIPTION

The work specified in this section consists of furnishing and installing augered cast-in-place piles. The pile contractor shall furnish all labor, materials, tools and equipment necessary for completion of the work.

1.02 REFERENCE STANDARDS

This section contains references to the following documents. They are a part of this section as specified and modified. In case of conflict between the requirements of this section and those of the listed documents, the requirements of this section shall prevail.

Reference	Title
ASTM A36	Standard Specification for Carbon Structural Steel
ASTM A615	Deformed and Plain Billet-Steel Bars for Concrete Reinforcement
ASTM A722	Uncoated High-Strength Steel Bar for Prestressing Concrete
ASTM C109	Compressive Strength of Hydraulic Cement Mortars
ASTM C942	Standard Test Method for Compressive Strength of Grouts for Preplaced-Aggregate Concrete in the Laboratory
ASTM D1143	Standard Test Method for Deep Foundations Under Static Axial Compressive Load
ASTM D3689	Standard Test Method for Individual Piles Under Static Axial Tensile Load

1.03 QUALITY ASSURANCE

A. GENERAL:

The qualifications and facilities of the Contractor to install piles shall be submitted as specified in the Information for Bidders.

The Contractor, upon request of the Engineer, shall submit evidence of successful installation of augered cast piles under similar job and subsurface

conditions. The job supervisor shall have a minimum of three years of method specific experience.

The Contractor shall make and test a set of six 2-inch cubes for each 50 cubic yards of grout placed, or at least one set for each day during which piles are placed. A set of cubes shall be made and tested from each truck of grout delivered during test pile installation. Each set of cubes shall be tested as follows: two cubes at seven days, two cubes at 28 days, and two cubes held in reserve tested at a time determined by the Engineer. All cubes shall be cured and tested accordance with ASTM C109. Cube specimens shall be restrained from expansion as described in ASTM C942.

The Contractor shall perform axial compressive load tests and, if indicated, axial tensile load tests. Compressive load tests shall be in accordance with ASTM D1143 while tensile load tests shall be in accordance with ASTM D3689. Test piles are piles that are solely used for verification of Contractor's proposed installation procedure and are to be independent of production piles. Exact location of test piles is to be coordinated with the Engineer. Tension tests, if required, may be performed prior to the compressive test on both test piles and monitor piles.

Location	Test piles number and test type
Treatment Building	2 Compression

B. CONSTRUCTION EQUIPMENT:

1. AUGERING EQUIPMENT: Continuous flight, hollow shaft auger having neither gaps nor breaks from auger head to auger top.

2. GROUT PUMPS: Positive displacement piston type capable of developing pressures, at pump, to 350 psi. Clean pumps and mixing drums before placing grout therein.

1.04 SUBMITTALS

The following submittals shall be provided in accordance with Section 01300:

1. Submit detailed description of procedures and all equipment proposed for use.

2. Submit grout mix design and results of grout cube tests in accordance with Project Record Documents.

3. Pile layout plan referenced to the structural plans including a numbering system capable of identifying each individual pile.

4. Submit reinforcing steel mill test reports.

5. Augering record of each augered pile in accordance with Project Record Documents. Show augered pile type, location, and identification number,

shaft diameter, top and bottom elevations, description of augering equipment including torque and down thrust, volume of hole, volume of grout placed in hole, and nature and location of obstructions.

6. If pile load tests are specified, a dimensional sketch of the loading arrangement, including sizes of primary members, data on testing and measuring equipment including required jack and/or gauge calibrations.

1.05 JOB SITE CONDITIONS

Excavating or compacted fills shall have been completed to indicate elevation of pile cap bottom before augering starts.

PART 2—PRODUCTS

2.01 GENERAL

The piles size and minimum bearing value shall be as indicated on the structural drawings.

2.02 GROUT

Homogeneous mixture of Portland cement, pozzolan, fluidifier (water reducing admixture), sand, and water 28-day compression strength of not less than 3,000 pounds per square inch when tested in accordance with ASTM C109.

A. MIXING:

Proportion ingredients in a manner which will ensure that solids will be maintained in suspension without appreciable water gain, yet will ensure that mixture may be pumped without difficulty and will laterally penetrate, and fill voids in, piling wall. If agitated continuously, the grout may be held in the agitator for a period not exceeding two hours at grout temperatures at and below 70 degrees F and for a period not exceeding 1 1/2 hours at temperatures above 70 degrees F. Grout shall not be placed when its temperature exceeds 100 degrees F.

B. PORTLAND CEMENT, SAND AND WATER:

Cast-in-place concrete in accordance with Section 03300.

C. FLUIDIFIER:

Compound possessing characteristics which will increase flowability of mixture, assist in dispersing cement grains, and minimize grout shrinkage.

2.03 REINFORCING BARS

ASTM A615; Grade 60.

2.04 HIGH STRENGTH REINFORCING BARS

ASTM A722, Type II (surface deformations), uncoated high-strength bars, size as indicated on the Drawings. Anchorage plates shall conform to ASTM A36. Nuts and couplings shall be compatible with bar threading and shall fully develop reinforcing bar.

PART 3—EXECUTION

3.01 INSTALLATION

Pile shall be drilled by rotating the auger into the ground until refusal criteria is met. Required refusal criteria consists of advancement of less than 1 foot for a period of 2 minutes with the auger at full thrust and torque. Auger cast pile drill rig shall provide torque at drill stem of at least 25,000 foot-pounds and drive box shall weight at least 5,000 pounds.

Pile length as measured from top to refusal shall not exceed 30 times the pile diameter. If the length exceeds 30 times the pile diameter, notify the Engineer for revision. The Engineer will either revise pile diameter to pile length divided by 30 or allow the original diameter but visually verify the pile installation as satisfactory.

Continuously pump and measure grout while auger is being withdrawn, and in a manner which will prevent hole collapse due to hydrostatic and lateral earth pressure and which will cause grout to laterally penetrate voids and soft and porous zones in surrounding soil. If there is a pause in grouting operation, recirculate unplaced grout through pump. Where the installation process of any pile is interrupted or a loss of concreting pressure occurs, the pile should be redrilled to 5 feet below the elevation of the tip of the auger when the installation was interrupted or concrete pressure was lost and reformed.

The total volume of grout shall be at least 115 percent of the theoretical volume for each pile. If less than 115 percent of the theoretical volume of grout is placed in any five foot increment (until the grout head on the auger flighting reaches the ground surface), the pile shall be reinstalled by advancing the auger 10 feet of to the bottom of the pile if that is less, followed by controlled removal and grout injection.

Raise auger at a rate which will ensure that grout is always under pressure at pile bottom; periodically check pressure gauge at tub. If auger is turned while grout is being placed, turn auger in that direction which brings cuttings up the hole. If auger becomes stuck and must be reversed to free it, auger not less than 5 feet through grout.

Place reinforcement simultaneously with grout through aperture in center of auger.

If grout should settle after grouting operations have been completed, clean top surface of grout and place additional grout in a manner which will ensure that top will be at indicated elevation.

Piles shall not be installed within four pile diameters center to center of a pile filled with grout less than 12 hours old. If the grout level in any completed pile drops, due to installation of an adjacent pile, the pile shall be replaced.

If pile will be cut off above bottom of footing, place a metal casing not shorter than 18 inches around pile top.

Center of gravity of a pile shall not deviate more than 3 inches from design position. Install additional pile or piles to realize design position of center of gravity, at no additional expense. If a pile has been installed beyond outer limit of design position of pile group, enlarge pile cap to a size determined by Engineer. Vertical piles shall be plumb within two percent. Battered piles shall be within four percent of specified batter.

Install and test piles at the locations shown on the plans in order to verify the design pile capacity. Axial pile load tests shall be performed in accordance with ASTM D1143. The pile contractor shall provide complete testing materials and equipment as required, install test and reaction piles and perform the load tests only in the presence of the Engineer.

Pile load tests shall be performed using the procedure of ASTM D1143. After completion of the test, reload the test pile to failure or three times the design load, whichever occurs first using an acceptable procedure described in ASTM D1143. Test piles shall not become a part of the permanent foundation system.

END OF SECTION

SECTION 02350

SHEETING, SHORING AND BRACING

PART 1—GENERAL

1.1 RELATED DOCUMENTS

Drawings and general provisions of the Contract, including General and Supplementary Conditions and Division 01 Specification Sections, apply to this Section.

1.2 SUMMARY

Section includes temporary excavation support and protection systems.

Related Sections:

1. Division 01380 Digital Photographic Documentation and 01015 Contractor's use of premises for recording preexisting conditions and excavation support and protection system progress.

2. Division 01 Section "Temporary Facilities and Controls" for temporary utilities and support facilities.

3. Section 02140 "Dewatering" for dewatering system for excavations.

1.3 PERFORMANCE REQUIREMENTS

Design, furnish, install, monitor, and maintain excavation support and protection system capable of supporting excavation sidewalls and of resisting soil and hydrostatic pressure and superimposed and construction loads.

1. Delegated Design: Design excavation support and protection system, including comprehensive engineering analysis by a qualified professional engineer, using performance requirements and design criteria indicated.

2. Prevent surface water from entering excavations by grading, dikes, or other means.

3. Install excavation support and protection systems without damaging existing buildings, structures, and site improvements adjacent to excavation.

4. Monitor vibrations, settlements, and movements.

1.4 SUBMITTALS

A. SHOP DRAWINGS:

For excavation support and protection system.

B. DELEGATED-DESIGN SUBMITTAL:

For excavation support and protection system indicated to comply with performance requirements and design criteria, including analysis data signed and sealed by the qualified professional engineer responsible for their preparation.

Coordinate first paragraph below with qualification requirements in Division 01 Section "Quality Requirements." Qualification Data: For qualified professional engineer.

C. OTHER INFORMATIONAL SUBMITTALS:

1. Photographs or Videotape: Show existing conditions of adjacent construction and site improvements that might be misconstrued as damage caused by the absence of, the installation of, or the performance of excavation support and protection systems. Submit before Work begins.

2. Record Drawings: Identifying and locating capped utilities and other subsurface structural, electrical, or mechanical conditions.

    a. Note locations and capping depth of wells and well points.

1.5 QUALITY ASSURANCE

A. PREINSTALLATION CONFERENCE:

Conduct conference at Project site.

1. Review methods and procedures related to excavation support and protection system including, but not limited to, the following:

    a. Geotechnical report.
    b. Existing utilities and subsurface conditions.
    c. Proposed excavations.
    d. Proposed equipment.
    e. Monitoring of excavation support and protection system.
    f. Working area location and stability.
    g. Coordination with waterproofing.
    h. Abandonment or removal of excavation support and protection system.

1.6 PROJECT CONDITIONS

A. INTERRUPTION OF EXISTING UTILITIES:

Do not interrupt any utility serving facilities occupied by Owner or others unless permitted under the following conditions and then only after arranging to provide temporary utility according to requirements indicated:

1. Notify Construction Manager no fewer than two days in advance of proposed interruption of utility.

2. Do not proceed with interruption of utility without Construction Manager's written permission.

B. PROJECT-SITE INFORMATION:

A geotechnical report has been prepared for this Project and is available for information only. The opinions expressed in this report are those of geotechnical engineer and represent interpretations of subsoil conditions, tests, and results of analyses conducted by geotechnical engineer. Owner will not be responsible for interpretations or conclusions drawn from the data.

1. Make additional test borings and conduct other exploratory operations necessary for excavation support and protection.

2. The geotechnical report is referenced elsewhere in the Project Manual.

C. SURVEY WORK:

Engage a qualified land surveyor or professional engineer to survey adjacent existing buildings, structures, and site improvements; establish exact elevations at fixed points to act as benchmarks. Clearly identify benchmarks and record existing elevations.

1. During installation of excavation support and protection systems, regularly resurvey benchmarks, maintaining an accurate log of surveyed elevations and positions for comparison with original elevations and positions. Promptly notify Architect if changes in elevations or positions occur or if cracks, sags, or other damage is evident in adjacent construction.

PART 2—PRODUCTS

2.1 MATERIALS

A. GENERAL:

Provide materials that are either new or in serviceable condition.

B. STRUCTURAL STEEL:

ASTM A 36/A 36M, ASTM A 690/A 690M, or ASTM A 992/A 992M.

C. STEEL SHEET PILING:

ASTM A 328/A 328M, ASTM A 572/A 572M, or ASTM A 690/A 690M; with continuous interlocks.

D. WOOD LAGGING:

Lumber, mixed hardwood, nominal rough thickness of size and strength required for application

E. SHOTCRETE:

Comply with Division 03 Section "Shotcrete" for shotcrete materials and mixes, reinforcement, and shotcrete application.

F. CAST-IN-PLACE CONCRETE:

ACI 301, of compressive strength required for application.

G. REINFORCING BARS:

ASTM A 615/A 615M, Grade 60 (Grade 420), deformed.

H. TIEBACKS:

Steel bars, ASTM A 722/A 722M.

Steel strand, ASTM A 416/A 416M.

PART 3—EXECUTION

3.1 PREPARATION

Protect structures, utilities, sidewalks, pavements, and other facilities from damage caused by settlement, lateral movement, undermining, washout, and other hazards that could develop during excavation support and protection system operations.

1. Shore, support, and protect utilities encountered.

   Install excavation support and protection systems to ensure minimum interference with roads, streets, walks, and other adjacent occupied and used facilities.

1. Do not close or obstruct streets, walks, or other adjacent occupied or used facilities without permission from Owner and authorities having jurisdiction. Provide alternate routes around closed or obstructed traffic ways if required by authorities having jurisdiction.

   Locate excavation support and protection systems clear of permanent construction so that forming and finishing of concrete surfaces are not impeded.

   Monitor excavation support and protection systems daily during excavation progress and for as long as excavation remains open. Promptly correct bulges, breakage, or other evidence of movement to ensure that excavation support and protection systems remain stable.

   Promptly repair damages to adjacent facilities caused by installing excavation support and protection systems.

3.2 SOLDIER PILES AND LAGGING

Install steel soldier piles before starting excavation. Extend soldier piles below excavation grade level to depths adequate to prevent lateral movement. Space soldier piles at regular intervals not to exceed allowable flexural strength of wood lagging. Accurately align exposed faces of flanges to vary not more than 2 inches (50 mm) from a horizontal line and not more than 1:120 out of vertical alignment.

Install wood lagging within flanges of soldier piles as excavation proceeds. Trim excavation as required to install lagging. Fill voids behind lagging with soil, and compact.

Install wales horizontally at locations indicated on Drawings and secure to soldier piles.

3.3 SHEET PILING

Before starting excavation, install one-piece sheet piling lengths and tightly interlock to form a continuous barrier. Accurately place the piling, using templates and guide frames unless otherwise recommended in writing by the sheet piling manufacturer. Limit vertical offset of adjacent sheet piling to 60 inches (1500 mm). Accurately align exposed faces of sheet piling to vary not more than 2 inches (50 mm) from a horizontal line and not more than 1:120 out of vertical alignment. Cut tops of sheet piling to uniform elevation at top of excavation.

3.4 TIEBACKS

Drill, install, grout, and tension tiebacks. Test load-carrying capacity of each tieback and replace and retest deficient tiebacks.

1. Test loading shall be observed by a qualified professional engineer responsible for design of excavation support and protection system.

2. Maintain tiebacks in place until permanent construction is able to withstand lateral soil and hydrostatic pressures.

3.5 BRACING

Locate bracing to clear columns, floor framing construction, and other permanent work. If necessary to move brace, install new bracing before removing original brace.

1. Do not place bracing where it will be cast into or included in permanent concrete work unless otherwise approved by Architect.

2. Install internal bracing, if required, to prevent spreading or distortion of braced frames.

3. Maintain bracing until structural elements are supported by other bracing or until permanent construction is able to withstand lateral earth and hydrostatic pressures.

3.6 REMOVAL AND REPAIRS

Remove excavation support and protection systems when construction has progressed sufficiently to support excavation and bear soil and hydrostatic pressures. Remove in stages to avoid disturbing underlying soils or damaging structures, pavements, facilities, and utilities.

1. Remove excavation support and protection systems to a minimum depth of 48 inches (1200 mm) below overlaying construction and abandon remainder.

2. Fill voids immediately with approved backfill compacted to density specified in Division 31 Section "Earth Moving."

3. Repair or replace, as approved by Architect, adjacent work damaged or displaced by removing excavation support and protection systems.

Leave excavation support and protection systems permanently in place.

END OF SECTION

SECTION 02445

CHAIN LINK FENCES AND GATES

PART 1—GENERAL

1.01 DESCRIPTION

This work consists of furnishing and installing chain link fence, gates and accessories in conformance with the lines, grades, and details as shown.

1.02 RELATED WORK

Grounding of fencing for enclosures of electrical equipment and for lightening protection as shown: Section 16450, GROUNDING.

Finish Grading: Sections 02200, EARTHWORK

1.03 MANUFACTURER'S QUALIFICATIONS

Fence, gates, and accessories shall be products of manufacturers' regularly engaged in manufacturing items of type specified.

1.04 SUBMITTALS

In accordance with Section 01340, SAMPLES AND SHOP DRAWINGS, furnish the following:

1. Manufacturer's Literature and Data: Chain link fencing, gates and all accessories

2. Manufacturer's Certificates: Zinc-coating complies with complies with specifications.

Certification that fence alignment meets requirements of contract drawings.

1.05 APPLICABLE PUBLICATIONS

The publications listed below form a part of this specification to the extent referenced. The publications are referenced in the text by the basic designation only.

FEDERAL SPECIFICATIONS (FED. SPEC.):

FF P 110H	Padlock, Changeable Combination (Mar. 94)
RR F 191K/GEN	Fencing, Wire and Post Metal (and Gates, Chain Link Fence Fabric, and Accessories) (General Specification)

RR F 191/1D	Fencing, Wire and Post, Metal (Chain Link Fence Fabric) (Detail Specification)
RR F 191/2D	Fencing, Wire and Post, Metal (Chain Link Fence and Gates) (Detail Specification)
RR F 191/3D	Fencing, Wire and Post, Metal (Chain Link Fence Posts, Top Rails and Braces) (Detail Specification)
RR F 191/4D	Fencing, Wire and Post, Metal (Chain Link Fence Accessories) (Detail Specification)

AMERICAN SOCIETY FOR TESTING AND MATERIALS (ASTM):

C94 95	Ready Mixed Concrete

PART 2—PRODUCTS

2.01 GENERAL

Materials shall conform to Fed. Spec. RR F 191K/GEN, ferrous metals, zinc coated, and detailed specifications forming the various parts thereto, and other requirements specified herein. Zinc coat metal members (including fabric, gates, posts, rails, hardware and other ferrous metal items) after fabrication. Zinc coating shall be reasonably free of excessive roughness, blisters and salammoniac spots.

2.02 CHAIN LINK FABRIC

Fed. Spec. RR F 191/1D, 9 gauge wire woven in a 50 mm (2 inch) mesh. Top and bottom selvage shall have twisted and barbed finish. Zinc coating weight shall be 340 grams/m2 (1.2 ounces per square foot).

2.03 POST, FOR GATES AND FENCING

Fed. Spec. RR F 191/2D, Grade A or B round, zinc coated steel. Dimensions and weights of posts shall conform to the tables in the Fed. Spec. Provide post braces and truss rods for each gate, corner, pull or end post. Provide truss rods with turnbuckles or other equivalent provisions for adjustment.

2.04 TOP RAIL AND BOTTOM RAIL

Fed. Spec. RR F 191/3D, Grade A or B round, zinc coated steel, fitted with suitable expansion sleeves and means for securing rail to each gate, corner, and end posts.

2.05 ACCESSORIES

Accessories as required caps, rail and brace ends, wire ties or clips, braces and tension bands, tension bars, truss rods, and miscellaneous accessories conforming to Fed. Spec. RR F 191/3D (Grade A or B) and RR F 191/4D.

2.06 BARBED WIRE SUPPORT ARMS

Fed. Spec. RR F 191/4D, single arm type, steel or malleable iron.

2.07 BARBED WIRE

Fed. Spec. RR F 191/4D, zinc coated steel wire and barbs.

2.08 GATES

Fed. Spec. RR F 191/2D, Type as shown. Gate framing, bracing, latches, and other hardware zinc coating weight shall be the same as the FABRIC. Gates less than 2,400 mm (8 feet) wide shall have truss rods or intermediate braces. Attach gate fabric to the gate frame by method standard with the manufacturer, except that welding will not be permitted. Arrange latches for padlocking so that padlock will be accessible from both sides of the gate regardless of the latching arrangement. When required, extend each end member of gate frame sufficiently above the top member or provide three strands of barbed wire in horizontal alignment with barbed wire strands on the fence.

2.09 GATE HARDWARE

Fed. Spec. RR F 191/2D, and be manufacturer's standard products, installed complete. Hinges shall be type to allow gates to swing through 180 degrees, from closed to open position. Hang and secure gates in such a manner that, when locked, they cannot be lifted off hinges.

Padlocks for gates are specified under Section 08710, BUILDERS HARDWARE.

Equip gate openings with padlock conforming to Fed. Spec. FF P 110H, Type EPC, size 50 mm (2 inch). Padlocks shall have chains that are securely attached to the gate or gate post. Before padlocks are delivered to project, submit sample to Resident Engineer for approval. Approved sample may be incorporated in work. Key padlock as directed by the Resident Engineer.

2.10 CONCRETE

ASTM C94, using 19 mm (3/4 inch) maximum size aggregate, and having minimum compressive strength of 25 MPa (3,000 psi) at 28 days. Non shrinking grout shall consist of one part Portland cement to three parts clean, well graded sand, non shrinking grout additive and the minimum amount of water to produce a workable mix.

PART 3—EXECUTION

3.01 INSTALLATION

Install fence by properly trained crew, on previously prepared surfaces, to line and grade as shown. Install fence in accordance with the fence manufacturer's written installation instructions, except as modified herein or as shown. Maintain all equipment, tools, and

machinery while on the project in sufficient quantities and capacities for proper execution of the work.

A Registered Professional Land Surveyor or Registered Civil Engineer specified in Section, GENERAL REQUIREMENTS, shall stake out and certify the fence alignment to meet the requirements as shown.

3.02 REPAIR OF GALVANIZED SURFACES

Use galvanized repair compound, stick form, or other method, where galvanized surfaces need field or shop repair. Repair shall be in accordance with the manufacturer's printed directions.

3.03 EXCAVATION

Excavation for concrete embedded items shall be of the dimensions shown, except in bedrock. If bedrock is encountered before reaching the required depth, continue the excavation to the depth shown or 450 mm (18 inches) into the bedrock, whichever is less, and provide a minimum of 50 mm (2 inches) larger diameter than the outside diameter of the post. Clear post holes of loose material. Grade area around finished concrete footings as shown and dispose of excess earth as directed by the Resident Engineer.

3.04 POST SETTING

Install posts plumb and in alignment. Set post in concrete footings of dimensions as shown, except in bedrock. Thoroughly compact concrete so as to be free of voids and finished in a slope or dome to divert water running down the post away from the footing. Install posts in bedrock with a minimum of 25 mm (one inch) of non-shrinking grout around each post. Thoroughly work non shrinking grout into the hole so as to be free of voids and finished in a slope or dome. Cure concrete and grout a minimum of 72 hours before any further work is done on the posts.

3.05 POST SETTING IN STRUCTURES

Install post in retaining walls, curbs, concrete slabs, or similar construction in proper size galvanized pipe sleeves set into the concrete or built into the masonry as shown. Set sleeves plumb and 13 mm (1/2 inch) above the finished structure. Fill space between sleeve and post solidly with non-shrinking grout, molten lead, or sulfur, finished to divert water running down the post away from the post base.

3.06 POST CAPS

Fit all exposed ends of post with caps. Provide caps that fit snugly and are weathertight. Where top rail is used, provide caps to accommodate the top rail. Install post caps as recommended by the manufacturer and as shown.

3.07 SUPPORTING ARMS

Design supporting arms, when required, to be weathertight. Where top rail is used, provide arms to accommodate the top rail. Install supporting arms as recommended by the manufacturer and as shown.

3.08 TOP RAILS AND BOTTOM RAILS

Install rails before installing chain link fabric. Provide suitable means for securing rail ends to terminal and intermediate post. Top rails shall pass through intermediate post supporting arms or caps as shown. The rails shall have expansion couplings (rail sleeves) spaced as recommended by the manufacturer. Where fence is located on top of a wall, install expansion couplings over expansion joints in wall.

3.09 ACCESSORIES

Supply accessories (posts braces, tension bands, tension bars, truss rods, and miscellaneous accessories), as required and recommended by the manufacturer, to accommodate the installation of a complete fence, with fabric that is taut and attached properly to posts, rails, and tension wire.

3.10 FABRIC

Pull fabric taut and secured with wire ties or clips to the top rail and bottom rail close to both sides of each post and at intervals of not more than 600 mm (24 inches) on centers. Secure fabric to posts using stretcher bars and ties or clips.

3.11 BARBED WIRE

Install barbed wire, when required, on supporting arms above the fence posts. Extend each end member of gate frames sufficiently above the top member to carry three strands of barbed wire in horizontal alignment with barbed wire strands on the fence. Pull each strand taut and securely fasten to each supporting arm and extended member. The method of securing wires shall be positive and complete.

3.12 GATES

Install gates plumb, level, and secure for full opening without interference. Set keepers, stops and other accessories into concrete as required by the manufacturer and as shown. Adjust hardware for smooth operation and lubricate where necessary.

3.13 FINAL CLEAN UP

Remove all debris, rubbish and excess material from the station.

END OF SECTION

SECTION 02480

LANDSCAPING

PART 1—GENERAL

1.01 DESCRIPTION

This work consists of furnishing and installing all planting materials required for landscaping hereinafter specified in locations as shown.

1.02 EQUIPMENT

Maintain all equipment, tools and machinery while on the project in sufficient quantities and capacity for proper execution of the work.

1.03 RELATED WORK

1. Stripping Topsoil and Stock Piling: Section 02200, EARTHWORK.

1.04 SUBMITTALS

A. SAMPLES:

Submit the following samples for approval before work is started:

1.	Inert Mulch	5 pounds of each type to be used.
2.	Organic Mulch	5 pounds of each type to be used.
3.	Pre Emergent Herbicide	5 pounds of each type to be used.

B. CERTIFICATES OF CONFORMANCE OR COMPLIANCE:

Before delivery, notarized certificates attesting that the following materials meet the requirements specified shall be submitted to the Owner's Representative for approval:

1. Plant Materials (Department of Agriculture certification by State Nursery Inspector declaring material to be free from insects and disease)

2. Fertilizers

3. Lime

4. Peat

5. Seed

6. Sod

7. Membranes

8. Asphalt Adhesive

C. MANUFACTURER'S LITERATURE AND DATA:

1. Metal edging
2. Antidesiccant
3. Erosion control materials
4. Hydro mulch
5. Pre emergent herbicide

D. LICENSES:

Licenses of Arborist shall be submitted (one copy), to the Owner's Representative.

1.05 DELIVERY AND STORAGE

A. DELIVERY:

1. Notify the Owner's Representative of the delivery schedule in advance so the plant material may be inspected upon arrival at the job site. Remove unacceptable plant material from the job site immediately.

2. Protect plants during delivery to prevent damage to root balls or desiccation of leaves. Protect trees during transport by tying in the branches and covering all exposed branches.

3. The use of equipment such as "tree spades" is permitted provided the plant balls are sized in accordance with ANSI Z60.1 and tops are protected from damage.

4. Deliver fertilizer and lime to the site in the original, unopened containers bearing the manufacturer's guaranteed chemical analysis, name, trade name or trademark, and in conformance to state and federal law. In lieu of containers, fertilizer and lime may be furnished in bulk and a certificate indicating the above information shall accompany each delivery.

5. During delivery: Protect sod from drying out and seed from contamination.

B. STORAGE:

1. Sprinkle sod with water and cover with moist burlap, straw or other approved covering, and protect from exposure to wind and direct sunlight. Covering should permit air circulation to alleviate heat development.

2. Keep seed, lime, and fertilizer in dry storage away from contaminants.

3. Store plants not installed on the day of arrival at the site as follows:

   a. Shade and protect plants from the wind when stored outside.

   b. Heel in bare root plants.

   c. Protect plants stored on the project from drying out at all times by covering the balls or roots with moist sawdust, wood chips, shredded bark, peat moss, or other similar mulching material.

   d. Keep plants, including those in containers, in a moist condition until planted, by watering with fine mist spray.

1.06 PLANTING AND TURF INSTALLATION SEASONS AND CONDITIONS

No work shall be done when the ground is frozen, snow covered, too wet or in an otherwise unsuitable condition for planting.

1.07 PLANT AND TURF ESTABLISHMENT PERIOD

The Establishment Period for plants and turf shall begin immediately after installation, with the approval of the Resident Engineer, and continue until the date that the Owner performs a final inspection. During the Plant and Turf Establishment Period the Contractor shall:

1. Water all plants and turf to maintain an adequate supply of moisture within the root zone. An adequate supply of moisture is the equivalent of 1 inch of absorbed water per week either through natural rainfall or augmented by periodic watering. Apply water at a moderate rate so as not to displace the mulch or flood the plants and turf.

2. Prune plants and replace mulch as required.

3. Replace and restore stakes, guy wires, and eroded plant saucers as required.

4. In plant beds and saucers, remove grass, weeds, and other undesired vegetation, including the root growth, before they reach a height of 3 inches.

5. Spray with approved insecticides and fungicides to control pests and ensure plant survival in a healthy growing condition, as directed by the Owner’s Representative.

6. Provide the following turf establishment:

   a. Eradicate all weeds. Water, fertilize, overseed, and perform any other operation necessary to promote the growth of grass.

   b. Replant areas void of turf one square foot and larger in area.

c. Mow the new lawn at least three times prior to the final inspection. Begin mowing when grass is 4 inches high. Mow to a 2 1/2 inch height.

7. The Contractor is not responsible for theft or damage to plants by noncontractor vehicles or vandalism once plants are installed and approved.

1.08 PLANT AND TURF GUARANTEE

All work shall be in accordance with the terms of the GENERAL CONDITIONS, including the following supplements:

1. A One Year Plant and Turf Guarantee will begin on the date that the Owner performs the final acceptance. The Contractor shall have completed, located, and installed all plants and turf according to the plans and specifications. All plants and turf are expected to be living and in a healthy condition at the time of final acceptance.

2. The Contractor will replace any dead plant material and any areas void of turf immediately. A one year guarantee for the plants and turf that were replaced, will begin on the day the work is completed.

3. Replacement of relocated plants, that the Contractor did not supply, is not required unless they die from improper handling and care during transplanting. Loss through Contractor negligence requires replacement in kind and size.

4. The Owner will reinspect all plants and turf at the end of the One Year Guarantee. The Contractor will replace any dead, missing, or defective plant material and turf immediately. The Guarantee will end on the date of this inspection provided the Contractor has complied with the work required by this specification.

1.09 APPLICABLE PUBLICATIONS

The publications listed below, form a part of this specification to the extent referenced. The publications are referenced in the text by basic designation only.

American National Standards Institute (ANSI) Publications:

ANSI Z60.1 1990	Nursery Stock
ANSI Z133.1 1994	Tree Care Operations Pruning, Trimming, Repairing, Maintaining, and Removing Trees and Cutting Brush Safety Requirements

Hortus Third, A Concise Dictionary of Plants Cultivated in the U.S. and Canada, MacMillan Publishing Co. 1978.

American Society for Testing and Materials (ASTM) Publications:

C136 96	Sieve Analysis of Fine and Coarse Aggregates
C516 80(Rev. 1996)	Vermiculite Loose Fill Thermal Insulation
C549 81(Rev. 1995)	Perlite Loose Fill Insulation
D977 91	Emulsified Asphalt (AASTHO M140)
D2028 76(Rev.1992)	Cutback Asphalt (Rapid curing Type)
D2103 92	Polyethylene Film and Sheeting

Turf Producers International:

Guideline Specifications to Turfgrass Sodding 1995 ed.

U. S. Department of Agriculture Federal Seed Act of August 9, 1939:

53 Stat. 1275	Rules and Regulations

American Wood Preservative Association (AWPA):

C2-95	Lumber, Timbers, Bridge Ties and Mine Ties, Pressure Treatment

PART 2—PRODUCTS

2.01 GENERAL

All plant and turf material will conform to the varieties specified or shown in the plant list and be true to botanical name as listed in Hortus Third.

2.02 PLANTS

Plants shall be in accordance with ANSI Z60.1, except as otherwise stated in the specifications or shown on the plans. Where the drawings or specifications are in conflict with ANSI Z60.1, the drawings and specification shall prevail.

Provide well branched and formed planting stock, sound, vigorous, and free from disease, sunscald, windburn, abrasion, harmful insects or insect eggs with healthy, normal, and unbroken root systems. Provide trees, deciduous and evergreen, that are single trunked with a single leader, unless otherwise indicated, display no weak crotches. Provide symmetrically developed deciduous trees and shrubs of uniform habit of growth, with straight boles or stems and free from objectionable disfigurements, and evergreen trees and shrubs with well developed symmetrical tops with typical spread of branches for each particular species or variety. Provide ground cover and vine plants

with the number and length of runners for the size specified, and the proper age for the grade of plants specified. Provide vines and ground cover plants well established in removable containers, integral containers, or formed homogeneous soil sections. Plants shall have been grown under climatic conditions similar to those in the locality of the project. Spray all plants budding into leaf or having soft growth with an anti desiccant at the nursery before digging.

The minimum acceptable sizes of all plants, measured before pruning with branches in normal position, shall conform to the measurements designated. Plants larger in size than specified may be used with the approval of the Owner's Representative, with no change in the contract price. When larger plants are used, increase the ball of earth or spread of roots in accordance with ANSI Z60.1.

Provide nursery grown plant material conforming to the requirements and recommendations of ANSI Z60.1. Dig and prepare plants for shipment in a manner that will not cause damage to branches, shape, and future development after planting.

Balled and burlapped (B&B) plant ball sizes and ratios will conform to ANSI Z60.1, consisting of firm, natural balls of soil wrapped firmly with burlap or strong cloth and tied.

Bare root (BR) plants shall have the root system substantially intact, but with the earth carefully removed. Cover roots with a thick coating of mud by "puddling" after the plants are dug.

Container grown plants shall have sufficient root growth to hold the earth intact when removed from containers, but shall not be root bound.

Make substitutions only when a plant (or its alternates as specified) is not obtainable and the Owner's Representative authorizes a change providing for use of the nearest equivalent obtainable size or variety of plant having the same essential characteristics with an equitable adjustment of the contract price.

When existing plants are to be relocated, ball sizes shall conform to requirements for collected plants in ANSI Z60.1, and plants shall be dug, handled, and replanted in accordance with applicable sections of these specifications.

2.03 LABELS

Each plant, or group and bundles or containers of the same species, variety, and size of plant, shall be legibly tagged with a durable, waterproof and weather-resistant label indicating the correct plant name and size specified in the plant list. Labels shall be securely attached and not be removed.

2.04 TOPSOIL

Topsoil shall be a well-graded soil of good uniform quality. It shall be a natural, friable soil representative of productive soils in the vicinity. Topsoil shall be free of admixture of subsoil, foreign matter, objects larger than one inch in any dimension, toxic substances, weeds and any material or substances that may be harmful to plant growth and shall have a pH value of not less than 5.0 nor more than 7.5.

Obtain material from stockpiles established under Section EARTHWORK, subparagraph, Stripping Topsoil, that meets the general requirements as stated above. Amend topsoil not meeting the pH range specified by the addition of pH Adjusters.

If sufficient topsoil is not available on the site to meet the depth as specified herein, the Contractor shall furnish additional topsoil. At least 10 days prior to topsoil delivery, notify the Owner's Representative of the source(s) from which topsoil is to be furnished. Obtain topsoil from well drained areas. Additional topsoil shall meet the general requirements as stated above. Amend topsoil not meeting the pH range specified by the addition of pH adjusters.

2.05 LIME

Lime shall be agricultural limestone containing not less than 90 percent calcium and magnesium carbonates. Lime must be must be ground to such a fineness that not less than 90% must pass No. 8 mesh and not less than 25% must pass No. 100 mesh. Moisture is not to exceed 10%.

2.06 SOIL CONDITIONERS

Peat shall be a natural product of sphagnum moss peat, peat moss, hypnum moss, peat reed sedge peat or peat humus derived from a fresh-water site conforming to Fed. Spec. Q P 166, except as otherwise specified. Peat shall be shredded and granulated to pass through a 1/2-inch mesh screen and conditioned in storage piles for at least six months after excavation.

Sand shall be clean and free of toxic materials.

Perlite shall conform to ASTM C549.

Vermiculite shall be horticultural grade and free of any toxic materials and conform to ASTM C516.

2.07 PLANTING SOIL MIXTURE

The planting soil mixture shall be composed of 2 parts topsoil, and 1 part peat.

2.08 PLANT FERTILIZER

Provide plant fertilizer that is commercial grade and uniform in composition and conforms to applicable state and federal regulations.

For new plant material, provide packet, table, or pellet forms of slow release fertilizers, bearing the manufacturer's guaranteed statement of analysis. Slow release fertilizers shall contain a minimum percentage by weight of nitrogen, available phosphoric acid, and potash as determined by the Contractor's licensed Arboristbased on soil test.

For existing trees, provide granular fertilizer bearing the manufacturer's guaranteed statement of analysis. Granular fertilizer shall contain a minimum percentage by weight

of nitrogen (of which 50 percent shall be organic), available phosphoric acid, and potash as determined by the Contractor's licensed Arboristbased on soil test.

2.09 TURF FERTILIZER

Provide turf fertilizer that is commercial grade, free flowing, uniform in composition, and conforms to applicable state and federal regulations. Granular fertilizer shall bear the manufacturer's guaranteed statement of analysis. Granular fertilizer shall contain a minimum percentage by weight of nitrogen (of which 50 percent shall be organic), available phosphoric acid, and potash as determined by County Extension Agent based on soil test. Liquid starter fertilizer for use in the hydro seed slurry will be commercial type with 50 percent of the nitrogen in slow release form.

2.10 MEMBRANES

Polyethylene shall conform to ASTM D2103 and shall be 4 mils thick and clear in color.

Fiberglass mat shall be of lime borosilicate glass fibers with an average fiber diameter of 0.3 mm (8 to 12 microns) and 2 to 4 inch strands of fiber bonded with phenol formaldehyde resin. The mat shall be 100 percent textile glass fiber. Mat shall be roll type, water permeable, and a minimum of 1/4 inch and maximum of 1/2 inch thick with a density of not less than 3/4 pound per cubic foot.

2.11 MULCH

Mulch shall be free from deleterious materials and shall be stored as to prevent inclusion of foreign material.

Inert mulch materials shall be riverbank stone and shall range in size from one inch to 2 1/2 inches in accordance with ASTM C 136.

Organic mulch materials shall be pine needles.

1. Straw for lawn seed bed mulch shall be stalks from oats, wheat, rye, barley, or rice that are free from noxious weeds, mold or other objectionable material. Straw shall be in an air dry condition and suitable for placing with blower equipment.

2. Wood cellulose fiber for use with hydraulic application of grass seed and fertilizer shall consist of specially prepared wood cellulose fiber, processed to contain no growth or germination inhibiting factors, and dyed an appropriate color to facilitate visual metering of the application of materials. On an air dry weight basis, the wood cellulose fiber shall contain a maximum of 12 percent moisture, plus or minus three percent at the time of manufacture. The pH range shall be from 3.5 to 5.0. The wood cellulose fiber shall be manufactured so that:

    a. After addition and agitation in slurry tanks with fertilizers, grass seeds, water, and other approved additives, the fibers in the

material will become uniformly suspended to form a homogeneous slurry.

b. When hydraulically sprayed on the ground, the material will form a blotter like cover impregnated uniformly with grass seed.

c. The cover will allow the absorption of moisture and allow rainfall or applied water to percolate to the underlaying soil.

2.12 ASPHALT ADHESIVE

Asphalt adhesive for application with straw mulch shall be liquid asphalt conforming to ASTM D2028, designation RC 70, or emulsified asphalt conforming to ASTM D977, Grade RS 1.

2.13 EROSION CONTROL

Erosion control net material shall be knitted synthetic netting, interwoven with paper strips in rolls approximately 56 to 60 inches wide. Openings between strands shall be approximately 1/2 inch square. Material will be secured with 6 inch wire staples made by the same manufacturer as the netting. All erosion control material is to be installed according to the respective manufacturer's recommendations.

Erosion control blanket material shall be cellulose fiber blanket bonded to 1/4 inch square plastic net weighing 20 pounds per 1000 square feet in 50 inch wide rolls.

2.14 TREE WOUND DRESSING

Tree wound dressing shall be clear shellac.

2.15 TREE WRAP

Tree wrap shall be two thicknesses of crinkled paper cemented together with a layer of bituminous material. Wrapping material shall be a minimum of 4 inches in width and have a stretch factor of 33 1/3 percent. Twine for tying shall be lightly tarred medium or coarse sisal yarn.

2.16 STAKES AND GUYING WIRES

1. Provide stakes for tree support of rough sawn wood, free from knots, rot, cross grain, or other defects that would impair the strength. Stakes shall be a minimum of 2 inches by 2 inches, or 2 1/2 inches in diameter, by 8 feet long and pointed at one end.

2. Guying wire shall be 12 gage annealed galvanized steel.

3. Hose chafing guards shall be new or used 2 ply reinforced rubber or plastic hose of all the same color on the project.

4. Flags to be fastened to guys shall be surveyor's plastic tape, white in color and 6 inches in length.

5. Guying cable shall be a minimum of five strand twisted, 3/16 inch diameter steel cable.

6. Turnbuckles shall be galvanized or cadmium plated and have a 3 inch minimum lengthwise opening fitted with screw eyes.

7. Eye bolts shall be galvanized or cadmium plated having a one inch diameter eye with a minimum screw length of 1 1/2 inches.

8. Deadmen shall be 4 inch by 8 inch rectangular, or 8 inch diameter by 36 inch long sound wood.

9. Arrow shaped or auger iron anchors shall be noncorrosive, and sized according to the manufacturer's recommendation.

2.17 EDGING

Metal edging shall be galvanized steel or aluminum with slots provided for stakes and shall be 3/16 inch thick by 4 inches deep in standard lengths. Steel edging shall be treated with a rust preventative coating and factory finished in color green. Anchoring stakes shall be of similar material and 16 to 18 inches long and tapered.

2.18 WATER

Water shall not contain elements toxic to plant life. It shall be obtained from a source available at the site and at no cost to the Contractor. The Contractor shall use caution to ensure that there is no waste of water. All water will be provided by the Contractor at No Cost to the Owner.

2.19 ANTIDESICCANT

Antidesiccant shall be an emulsion that will provide a film over plant surfaces permeable enough to permit transpiration.

2.20 SEED

Seed shall be state certified seed of the latest season's crop and shall be delivered in original sealed packages bearing the producer's guaranteed analysis for percentages of mixtures, purity, germination, weed seed content, and inert material. Seed shall be labeled in conformance with U. S. Department of Agriculture rules and regulations under the Federal Seed Act and applicable state seed laws. Seed that has become wet, moldy, or otherwise damaged will not be acceptable. Onsite seed mixing shall be done only in the presence of the Owner’s Representative.

2.21 SOD

Sod shall be nursery grown as classified in the TPI Guideline Specifications to Turfgrass Sodding. Quality shall conform to ASPA Guideline Specifications for Sodding.

2.22 SPRIGS

Sprigs shall be lateral stems 4 to 6 inches long with roots and leaves attached. Sprigs may be delivered in air tight bags to keep them from drying out. If sprigs are delivered unwrapped, keep them in moist burlap or other wrappings until planting.

2.23 PLUGS

Plugs shall be 2 to 4 inches across and 2 inches deep of live health grass. Keep plugs moist until planting.

2.24 HERBICIDES

All herbicides shall be properly labeled and registered with the U.S. Department of Agriculture. Keep all herbicides in the original labeled containers indicating the analysis and method of use.

PART 3—EXECUTION

3.01 LAYOUT

Stake plant material locations and bed outlines on project site for approval by the Owner’s Representative before any plant pits or beds are dug. The Owner’s Representative may approve adjustments to plant material locations to meet field conditions.

3.02 EXCAVATION FOR PLANTING

Prior to excavating for plant pits and bed, verify the location of any underground utilities. Damage to utility lines will be repaired at the Contractor's expense. Where lawns have been established prior to planting operation, cover the surrounding turf before excavations are made in a manner that will protect turf areas. Barricade existing trees, shrubbery, and beds that are to be preserved in a manner that will effectively protect them during the project construction.

Remove rocks and other underground obstructions to a depth necessary to permit proper planting according to plans and specifications. Where underground utilities, construction, or solid rock ledges are encountered, the Owner’s Representative may select other locations for plant material.

Dig plant pits by any approved method so that they have vertical sides and flat bottoms. When pits are dug with an auger and the sides of the pits become glazed, scarify the glazed surface. Size the plant pits as shown, otherwise, the minimum allowable dimensions of plant pits shall be regardless of width, 6 inches deeper for shrubs and 9

inches deeper for trees than the depth of ball or root spread; for ball or root spread up to 2 feet, pit diameters shall be twice the ball or root spread; for ball or root spread from 2 to 4 feet, pit diameters shall be 2 feet greater; for ball or root spread over 4 feet, pit diameters shall be 1 1/2 times the ball or root spread.

Where ground cover and planting beds occur in existing turf areas, remove turf to a depth that will ensure the removal of the entire root system, with additional bed preparation as specified in the next paragraph.

Where existing soil is to be used in place, till new ground cover and plant beds to a depth of 4 inches. Spread peat uniformly over the bed to depth of 2 inches and thoroughly incorporate it into the existing soil to a depth of 4 inches using a roto tiller or similar type of equipment to obtain a uniform and well pulverized soil mix. During tillage operations, remove all sticks, stones, roots, and other objectionable materials. Bring plant beds to a smooth and even surface conforming to established grades.

In areas of new grading where existing soil is being replaced for the construction of new ground cover and plant beds, remove 4 inches of existing soil and replace with topsoil. Plant beds shall be brought to a smooth and even surface conforming to established grades. Till 2 inches of peat into the topsoil as specified.

Using topsoil, form earth saucers or water basins for watering around plants.

Treat plant saucers, shrub, and ground cover bed areas, prior to mulching, with an approved pre-emergent herbicide. Plant ground cover in areas to receive erosion control material through the material after material is in place.

3.03 SETTING PLANTS

Handle balled and burlapped and container grown plants only by the ball or container. Remove container-grown plants in such a way to prevent damage to plants or root system. Set plants plumb and hold in position until sufficient soil has been firmly placed around the roots or ball. Set plants in relation to surrounding grade so that they are even with the depth at which they were grown in the nursery, collecting field, or container. Plant ground cover plants after the mulch is in place. Avoid contaminating the mulch with the planting soil. Add slow release packet, tablet or pellet fertilizer as each plant is installed as per manufacturer's recommendation for method of installation and quantity.

Backfill balled and burlapped and container-grown plants with planting soil mixture as specified to approximately half the depth of the ball and then tamp and water. For balled and burlapped plants, carefully remove excess burlap and tying materials and fold back. Where plastic wrap or treated burlap is used in lieu of burlap, completely remove these materials before backfilling. Tamp and water remainder of backfill Planting Soil Mixture; then form earth saucers or water basins around isolated plants with topsoil.

Plant bare root stock arranging the roots in a natural position. Remove damaged roots with a clean cut. Paint cuts larger than 13 mm (1/2 inch) in diameter with tree wound dressing. Carefully work Planting Soil Mixture in among the roots. Tamp and water the remainder of Planting Soil Mixture; then form earth saucers or water basins around isolated plants with topsoil.

3.04 TRUNK WRAPPING

Wrap the trunks of deciduous trees immediately after planting. Wrap the trunks of deciduous trees, 1 1/2 inches or greater in caliber with the specified material beginning at the base and extending to the first branches. Securely tie wrapping at the top and bottom and at 18 inch maximum intervals with twine. Remove wrapping after one year.

3.05 STAKING AND GUYING

1. Stake and guy plants as shown on the drawings and as specified.

2. Drive stakes vertically into the ground to a depth of 2 1/2 to 3 feet in such a manner as not to injure the ball or roots, unless otherwise shown on the drawings.

3. Place deadmen not less than 18 inches below the surface of the ground, unless otherwise shown on the drawings.

4. Install iron anchors according to manufacturer's recommendations.

5. Fasten flags securely on each guy wire approximately 2/3 of the distance up from ground level.

6. Remove stakes and guy wires after one year.

3.06 EDGING PLANT BEDS

Uniformly edge beds using a sharp tool to provide a clear cut division line between the planted area and the adjacent lawn.

Install metal edging materials in accordance with manufacturer's recommendations and as shown on the plans.

3.07 MULCHING PLANTS

Mulch within 48 hours after planting and applying a pre-emergent herbicide. Do not mulch in ground cover areas that shall have organic material placed before planting.

Placing Inert Material: Place polyethylene sheet or fiberglass mat with edges lapped 6 inches to 12 inches to receive inert mulch material. Punch a grid of 1/4 inch holes for drainage in the polyethylene sheet or fiberglass mat at one foot on centers over the entire area. Spread inert mulch to a uniform thickness over the membrane as shown.

Placing Organic Material: Spread a mulch of pine straw to a uniform minimum thickness of 4 inches.

Keep mulch out of the crowns of shrubs and off buildings, sidewalks, light standards, and other structures.

3.08 PRUNING

Prune new plant material in the following manner: Remove dead, broken and crossing branches. Prune deciduous trees and shrubs to reduce total amount of anticipated foliage by 1/4 to 1/3 while retaining typical growth habit of individual plants with as much height and spread as is practicable. Make cuts with sharp instruments as close as possible to the branch collar. Do not make flush cuts. Do not make "Headback" cuts at right angles to line of growth. Do not pole trees or remove the leader. Remove trimmings from the site. Paint cuts 1/2 inch in diameter and larger with the specified tree wound dressing.

Existing trees to be pruned are shown on the drawings. Perform tree pruning and cavity work by a licensed arborist in accordance with ANSI Z 133.1. Remove dead wood 1/2 inch or more in diameter, branches interfering with or hindering the healthy growth of the trees, and diseased branches with a clean cut made flush with the parent trunk. Cut back or remove branches as necessary to give the trees proper shape and balance. In removing large limbs, make the initial cut on the underside at a safe distance from the trunk or lateral, to prevent ripping of bark. Ensure branches and trimmings do not endanger traffic or cause damage to property during removal. Section large branches or limbs that cannot be removed in one piece without endangering traffic or property. Lower sections by ropes. Repair any damage resulting from the Contractor's negligence during pruning. Workmen are not permitted to climb trees with climbing spurs. To promote proper healing, cut off flush stubs or limbs that have resulted from improper cuts or broken as a result of former pruning. Remove girdling roots. Clean cuts or wounds measuring 1/2 inches or more in diameter, and exposed wood and scars resulting from previous work or damage. Remove decayed wood to expose healthy tissue. Shape cavities to provide drainage.

3.09 FERTILIZATION OF EXISTING TREES

Apply fertilizer to existing trees shown on the drawings at the rate of 2 pounds per inch caliper. Apply in 12 inch to 18 inch deep holes 1 1/2 to 2 inches in diameter, made by an earth auger, distributed evenly at not more than 2 feet on center throughout the outer half of the branch spread zone of each tree. Fertilize to within 4 inches of the surrounding grade. Use topsoil to bring the surface up to the surrounding grade. When using fertilizer in packet, tablet, or wedge form, apply in accordance with manufacturer's recommendations.

3.10 TILLAGE FOR TURF AREAS

Thoroughly till the soil to a depth of at least 4 inches by scarifying, disking, harrowing, or other approved methods. This is particularly important in areas where heavy equipment has been used, and especially under wet soil conditions. Remove all debris and stones larger than one inch remaining on the surface after tillage in preparation for finish grading. To minimize erosion, do not till areas of 3:1 slope ratio or greater. Scarify these areas to a one inch depth and remove debris and stones.

3.11 FINISH GRADING

After tilling the soil for bonding of topsoil with the subsoil, spread the topsoil evenly to a minimum depth of 4 inches. Incorporate topsoil at least 2 to 3 inches into the subsoil to avoid soil layering. Do not spread topsoil when frozen or excessively wet or dry. Correct irregularities in finished surfaces to eliminate depressions. Protect finished topsoil areas from damage by vehicular or pedestrian traffic. Complete lawn work only after areas are brought to finished grade.

3.12 APPLICATION OF FERTILIZER AND LIME FOR TURF AREAS

Apply turf fertilizer in accordance with County Extension Agent recommendations based on soil test. In addition, adjust soil acidity and add soil conditioners as required herein for suitable topsoil under PART 2, Paragraph, TOPSOIL.

Spread lime in accordance with County Extension Agent recommendations based on soil test.

Incorporate fertilizers and lime into the soil to a depth of at least 4 inches as part of the finish grading operation. Immediately restore the soil to an even condition before any turf work.

3.13 MECHANICAL SEEDING

Broadcast seed by approved sowing equipment at the rate as recommended by the manufacturer. Sow one-half of the seed in one direction, and the remainder sown at right angles to the first sowing. Cover seed to an average depth of 1/4 inch by means of spike tooth harrow, cultipacker, or other approved device.

Immediately after seeding, firm up the entire area with a roller not exceeding 150 pounds per foot of roller width. Where seeding is performed with a cultipacker type seeder or where seed is applied in combination with hydro mulching, no rolling is required.

Immediately after preparing the seeded area, evenly spread an organic mulch of straw by hand or by approved mechanical blowers at the rate of 2 tons per acre. Application shall allow some sunlight to penetrate and air to circulate but also reduce soil and seed erosion and conserve soil moisture. Anchor mulch by either a mulch tiller, asphalt emulsion, twine, or netting. When asphalt emulsion is used, apply either simultaneously or in a separate application. Take precautionary measures to prevent asphalt materials from marking or defacing structures, pavements, utilities, or plantings.

3.14 HYDROSEEDING

When hydroseeding, mix the seed and slow release starter fertilizer, or the seed, fertilizer, lime when required and approved wood cellulose mulch material in the required amount of water to produce a homogeneous slurry and then uniformly apply slurry under pressure. All hydroseeding is to be completed in accordance with Section 700-Grassing of the Georgia Department of Transportation, Standard Specifications, Construction of Roads and Bridges.

3.15 SODDING

Accomplish sodding in accordance with the ASPA Guideline Specifications for sodding. Lay sod at right angles to slope or the flow of water. On slope areas, start at the bottom of the slope.

After completing the sodding operation, blend the edges of the sodded area smoothly into the surrounding area.

3.16 SPRIGGING

Accomplish sprigging after the finish grading has been properly prepared and thoroughly soaked a day in advance. Set sprigs in rows, one foot apart each way, and in furrows 2 to 3 inches deep. Provide 35 L (one bushel) of sprigs for every 400 to 500 square feet. Place the sprigs at intervals of 6 to 12 inches, making sure that some of the leafy part of each sprig projects above the surface. Cover all but the top leaves by hand with topsoil, pressing it firmly in place and smoothing out the surface. Water thoroughly and keep soil moist. Do not treat sprig area with herbicide. Weed by hand or hoe.

3.17 PLUGGING

Accomplish plugging after the finish grading has been properly prepared. Dig holes for the plugs with a plugging tool of the proper diameter. Space the holes 12 inches apart on a 12 inch planting square grid. Provide one square meter (one square yard) of plugs for every 325 to 350 square feet. Fill each hole with water and allow to drain. Set each plug in the hole so that the base of the grass stem is slightly above the ground level. Press down on each plug with the heel of the shoe to bring the roots firmly into contact with the soil. Smooth the soil surface between the plugs with a rake. Water thoroughly and keep soil moist. Do not treat plug area with herbicide. Weed by hand or hoe.

3.18 WATERING

Apply water to the turf areas immediately following installation at a rate sufficient to ensure thorough wetting of the soil to a depth of at least 4 inches. Supervise watering operation to prevent run off. Supply all pumps, hoses, pipelines, and sprinkling equipment. Repair all areas damaged by water operations.

3.19 PROTECTION OF TURF AREAS

Immediately after installation of the turf areas, protect against traffic or other use by erecting barricades, as required, and placing approved signs at appropriate intervals until final acceptance.

3.20 EROSION CONTROL MATERIAL

Install and maintain erosion control material meeting the requirements of this specification on the designated areas as shown and specified. Prepare, fertilize and vegetate the area(s) to be covered, as specified, before the erosion material is placed. Immediately following the planting operations, lay the material evenly and smoothly and

in contact with the soil throughout. Omit the straw mulch from all seeded areas receiving the erosion control material.

For waterways, unroll the material in the direction of waterflow. When two or more strips are required to cover a ditch area, they shall overlap at least 4 inches. In case a strip is to be spliced lengthwise, the ends of the strips shall overlap at least 6 inches with the upgrade section on top.

When using erosion control material on slopes, place the material either horizontally or vertically to the slope with the edges and ends of adjacent strips butted tightly against each other.

Staple each strip in three rows (each edge and center with the center row alternately spaced) with staples spaced not more than 4 feet longitudinally. When using two or more strips side by side on slopes, use a common row of staples on the adjoining strips. Staple all end strips at one foot intervals at the end. Firmly embed staples in the underlying soil.

Maintenance shall consist of repairs made necessary by erosion, wind, or any other cause. Maintain, protect, repair, or replace the erosion control material until the Termination of the Plant and Guaranty Period.

3.21 RESTORATION AND CLEANUP

Where existing or new turf areas have been damaged or scarred during planting and construction operations, restore disturbed area to their original condition. Keep at least one paved pedestrian access route and one paved vehicular access route to each building clean at all times. In areas where planting and turf work have been completed, clear the area of all debris, spoil piles, and containers. Clear all other paved areas when work in adjacent areas is completed. Remove all debris, rubbish and excess material from the Station.

END OF SECTION

SECTION 02513

ASPHALT PAVING

PART 1—GENERAL

1.01 RELATED DOCUMENTS

The General Conditions, Supplementary Conditions, and General Requirements (Division 1) apply to the work specified in this section.

1.02 SCOPE

The Contractor shall furnish all labor and material required to complete all paving including laying out of this work, preparing of subgrade for all areas mentioned, backfilling and shaping of finished grades in connection with these site improvements as outlined on the drawings. Rough grading is included in another section of the specifications.

1.03 WORK INCLUDED

Paving operations shall not begin until all underground work or other grades have been completed and all catch basins installed in areas which are to be paved.

Before proceeding, verify all grades and elevations to insure proper and adequate drainage of at least 1/8"/ft unless otherwise shown.

Verify all grades and elevations shown on drawings before proceeding with work. While grades and elevations will, in general, conform to those shown on drawings, the Engineer reserves the right to make minor modifications by reasonable field adjustments prior to completion of subgrade work.

Flush drain inlets shall be set 1/4" below surface of compacted surface course unless otherwise specified or detailed on the drawings.

Asphalt paving shall be done in dry weather when subgrade is sufficiently stable to be properly compacted. Ground moisture shall not be sealed under paving. All work shall be in accordance with applicable sections of the Reference Standards.

PART 2 – PRODUCTS

2.01 REFERENCE SPECIFICATIONS

All materials and methods of construction of base and pavement shall conform to the requirements of "Standard Specifications for Road and Bridge Construction," Georgia Department of Transportation.

2.02 MATERIALS

1. General: Use locally available materials and gradations which comply with the following sections of the Reference.

2. Subgrade Stabilization and Aggregate Base Course: Section 815.

3. Asphalt Binder Course: Section 400, Mix Type as specified.

4. Asphalt Surface Course: Section 400, Mix Type as specified.

5 Prime Coat: Section 412, Cutback Asphalt.

6. Tack Coat: Section 413, Emulsified Asphalt.

7. Traffic Paint: Chlorinated-rubber base paint, factory-mixed, quick-drying, non-bleeding, white, and in accordance with FS TT-P-115, Type III.

PART 3 – EXECUTION

3.01 INSPECTION

The paving subcontractor shall examine all areas made ready for his work including, but not limited to, subgrade compaction, moisture content, drainage curbs, elevations and catch basins. Any defects which may adversely affect proper installation of this work shall be reported to the Engineer in writing and shall have been corrected before start of this work. Beginning of work shall signify acceptance of surfaces by the paving subcontractor.

The Contractor is responsible for contacting the Engineer's representative and the Soils Testing Laboratory at least 48 hours in advance of proofrolling.

3.02 BASE AND PAVEMENT DESIGN

Pavement Sections: As per plan sheets.

3.03 SUBGRADE STABILIZATION

All subgrade shall be shaped, rolled and thoroughly compacted before base material is applied. After the subgrade has been thoroughly compacted, the entire subgrade area shall be proofrolled as specified in the Section 02200-7, Part 3.10. All defective areas which pump, or shove, or are found to be soft shall be removed and satisfactorily repaired and test rolled again as specified. Where subgrade stabilization is utilized, subgrade shall be stabilized by spreading a minimum of 150 pounds of crusher run stone per square yard, 100% passing the 2-inch sieve, and thoroughly mixed into the top 3 to 4 inches.

3.04 BASE COURSE

On the subgrade approved by the Engineer, construct a crusher run base course to proper depth, roll to an even surface, and to the grades shown on details.

3.05 PRIME COAT

Prime: Apply prime coats after surface is dry at the rate of 0.2 gallon per square yard. The Contractor may request written approval from the engineer to waive application of the prime coat.

3.06 BINDER COURSE

Asphaltic concrete binder (hot mix) shall be applied by means of an approved mechanical spreader to a thickness of not less than the thickness specified on the plans after compaction and at no point shall vary more than 1/4" from a true section. Any high, low or defective areas shall be immediately remedied by cutting out the course at such areas and replacing with fresh hot mix, to be immediately compacted to conform to the surrounding area and thoroughly bonded thereto.

3.07 TACK COAT

Tack coat shall be applied in the amount of 0.05 gallon per square yard.

3.08 TOP COURSE

Asphaltic concrete topping (hot mix) shall be applied by means of a mechanical spreader to a thickness of not less than the thickness specified on the plans after compaction and at no point shall vary more than 1/4" from a true section. Any high, low or defective areas shall be immediately remedied by cutting out the course at such area and replacing with fresh hot mix, to be immediately compacted to conform to the surrounding area and thoroughly bonded thereto.

3.09 DAMAGED PAVING

Any bituminous paving which has been discolored, cut or marked during construction shall have the damaged topping removed and replaced. A skin patch will not be accepted. In replacing topping the grade shall not be changed.

3.10 TESTING THICKNESS

The Engineer, at his option and at his expense, may take as many tests as necessary to determine the average thickness of the base course prior to the placing of the surface course. The average thickness of all specimens shall be at least the specified thickness of the base course. In areas where there is a deficiency in the thickness of the course, the surface course shall be increased in thickness the amount of the average deficiency of all tests. If tests show a deficiency of 1/4" or more in the surface course, the Contractor shall be required to place an additional surface course of 1 inch in thickness and the failing test shall be paid for by the Contractor.

3.11 CLEANUP

At the completion of the work, the Contractor shall clean up all scraps, rubbish and surplus materials caused by this work and haul them away from the site. Remove all asphaltic materials from adjacent surfaces and leave in neat, clean and orderly condition. Hose and wash down all asphalt and related concrete paving to remove all mud, debris and other extraneous materials, just prior to final inspection.

END OF SECTION

SECTION 02601

MANHOLES

PART 1--GENERAL

1.01 DESCRIPTION

A. SCOPE:

This Section specifies labor, equipment and materials to provide all precast manholes, complete with manhole sections, grade adapter rings, cast iron frame and cover, reinforced concrete collar, pipe connections, and cast-in-place or prefabricated base and any other appurtenances, as shown and specified herein, in accordance with the requirements of the Contract Documents.

B. DESIGN REQUIREMENTS:

Structural design submittals specified hereinabove shall use the following basis of design:

1. Vertical Loads: Design all precast manhole sections and accessories to support an AASHTO HS-20 truck loading in addition to soil weight above sloping ring sections and the dead load of all material supported above.

2. Lateral Loads: Lateral loads shall be as dictated by the following formulae or the geotechnical report recommendations, whichever are more stringent.

3. Operating: 95 x H (psf) triangular equivalent fluid pressure for dead load plus a live load surcharge from a HS-20 truck including impact; where H = depth below finished grade.

4. Seismic: 23 x H (psf) uniform pressure distribution; where H = depth below finished grade.

1.02 QUALITY ASSURANCE

A. REFERENCES:

This section contains references to the following documents. They are a part of this section as specified and modified. Where a referenced document contains references to other standards, those documents are included as references under this section as if referenced directly. In the event of conflict between the requirements of this section and those of the listed documents, the requirements of this section shall prevail.

Unless otherwise specified, references to documents shall mean the documents in effect at the time of Advertisement for Bids or Invitation to Bid (or on the

effective date of the Agreement if there were no Bids). If referenced documents have been discontinued by the issuing organization, references to those documents shall mean the replacement documents issued or otherwise identified by that organization or, if there are no replacement documents, the last version of the document before it was discontinued. Where document dates are given in the following listing, references to those documents shall mean the specific document version associated with that date, whether or not the document has been superseded by a version with a later date, discontinued or replaced.

Reference	Title
ASTM A48	Specification for Gray Iron Castings
ASTM A615	Specification for Deformed and Plain Carbon-Steel Bars for Concrete Reinforcement
ASTM C33	Specification for Concrete Aggregates
ASTM C144	Specification for Aggregate for Masonry Mortar
ASTM C150	Specification for Portland Cement
ASTM C443	Specification for Joints for Concrete Pipe and Manholes, Using Rubber Gaskets
ASTM C478	Specification for Precast Reinforced Manhole Sections

1.03 SUBMITTALS

The following submittals shall be provided in accordance with Section 01300:

1. A copy of this specification section, with addendum updates included, and all referenced and applicable sections, with addendum updates included, with each paragraph check-marked to indicate specification compliance or marked to indicate requested deviations from specification requirements. Check marks (✓) shall denote full compliance with a paragraph as a whole. If deviations from the specifications are indicated, and therefore requested by the Contractor, each deviation shall be underlined and denoted by a number in the margin to the right of the identified paragraph, referenced to a detailed written explanation of the reasons for requesting the deviation. The Construction Manager shall be the final authority for determining acceptability of requested deviations. The remaining portions of the paragraph not underlined will signify compliance on the part of the Contractor with the specifications. Failure to include a copy of the marked-up specification sections, along with justification(s) for any requested deviations to the specification requirements, with the submittal shall be sufficient cause for rejection of the entire submittal with no further consideration.

2. Shop drawings, including:

    a. Furnish complete shop drawings for all precast manhole sections and special manholes, cast iron and fiberglass frames and covers and appurtenances, including details of construction.

b. For manholes over existing sewers, furnish plans and schedule for diverting sewage flow.

c. Details of construction shall be appropriate to the pipe materials being used. Reference project Plans and details and referenced pipe materials specifications.

d. Concrete mix design in conformance with Section 03300.

e. Reinforcing steel in conformance with Section 03200.

f. Submit structural calculations for manhole sections prepared by a civil or structural engineer registered in the State of Georgia.

3. Submit a traffic control plan for each access manhole site to be constructed in the public right of way.

4. Proposed curing method for cast-in-place concrete structures.

5. Precast manhole sections: Manufacturer's results of tests performed on representative sections to be furnished. Tests to be in conformance with ASTM C478.

a. Cylinder compression tests.

b. Absorption tests.

6. Flat slab tops: Proof-of-Design test in conformance with ASTM C478.

7. Precast manhole bases: Cylinder compression tests in conformance with ASTM C478.

8. Cast iron frame and covers: Manufacturer's certification of conformance to the specifications.

PART 2--PRODUCTS

2.01 MANUFACTURERS

The Owner and Construction Manager believe the following manufacturers are capable of producing equipment and/or products that will satisfy the requirements of this Section. This statement, however, shall not be construed as an endorsement of a particular manufacturer's products, nor shall it be construed that named manufacturers' standard equipment or products will comply with the requirements of this Section.

Manufacturer for manholes shall be Tindall Concrete, Foley Products, East Jordan, Olde Castle or equal.

2.02 MATERIALS

A. MANHOLES:

Precast Concrete Gravity Manholes shall be coated for all portions below the fiberglass or cast iron frame and cover elevation.

Precast concrete sections shall have steel-reinforced wall thicknesses of at least 5 inches.

Precast concrete sections shall be manufactured by a process that will produce a dense, homogeneous concrete ring of highest quality.

Cement used in manufacturing the sections shall be Type II Portland cement with a compressive strength of 4,000 psi at 28 days, as specified in ASTM C150.

Concrete aggregates shall conform to ASTM C33, gradation per mix design.

Manhole sections shall be tongue-and-groove type, joined by O-ring rubber gaskets, flexible plastic gaskets conforming to ASTM C443, or an approved bituminous mastic joint material; use of mortar shall not be allowed.

Each section of precast manhole shall have not more than two holes for the purpose of handling and laying. These holes shall be sealed.

Top and bottom of sections shall be parallel.

Prior to delivery of any size precast manhole section to jobsite, conduct acceptance tests at point of manufacture as specified.

Reinforcing Steel shall conform to ASTM A615, Grade 60, deformed bars.

B. BASES AND INVERTS:

Bases and inverts shall be constructed of 4,000 psi concrete or brick according to the standard details.

Base sections shall have base slab integral with sidewalls.

Base slab shall be a minimum 8 inches thick with No. 4 reinforcing bars, 8-inch centers, both directions in center of slab. Tie reinforcing steel to wall steel.

C. PIPE PENETRATIONS:

Holes in precast bases to receive sewer pipe shall be precast at the factory at the required locations and heights. Knocking out of holes in the field will not be permitted; however, holes can be cored in the field with a coring machine.

Pre-molded rubber boots with stainless steel banks shall be used for connecting sewer pipe to manholes. The boot shall be sized to suit the outside diameter of the type pipe being used.

Manufacturer for pipe penetration seals shall be “Kor-N-Seal” by National Pollution Control Systems, Inc. (lock-in type), Interpace Division of Ball Rubber, Inc. (cast-in type), or equal.

D. MANHOLE STEPS:

Manhole shall not be installed with any steps.

E. MANHOLE EXTENSIONS:

Concrete grade rings for extensions shall be a maximum 6 inches high with a minimum of one No. 2 reinforcing bar centered in the ring.

F. CAST IRON MANHOLE FRAMES AND COVERS:

Standard manhole frames and covers shall have clear opening of 23.75 inches diameter. Manufacturer shall be Vulcan V-1360, or equal.

Watertight manhole frames and covers shall have clear opening of 24 inches diameter. Manufacturer shall be Neenah R-19150-H2, East Jordan Iron Works with bolted-down lid, or equal.

Each item in a set of frames and covers shall be supplied by the same manufacturer.

Castings shall be tough, close-grained gray iron, sound, smooth, clean, free from blisters, blowholes, shrinkage, cold shuts and defects. Castings shall conform to ASTM A48, Class 35B, for cast iron and designed for HS-20 traffic loading. The Contractor shall plane or grind bearing surfaces to ensure flat, true surfaces. Manufacturer shall be US Foundry, Alhambra Foundry Co., Ltd., Neenah Foundry Co., Phoenix Iron Works, Inc., East Jordan Iron Works or equal.

Covers shall be true and seat within ring at all points. All manhole covers shall be tight fitting type with neoprene gaskets and have sealed pick holes. Covers shall be marked “SEWER” and have the Fulton County logo. See below for the details of the manhole ring and covers.

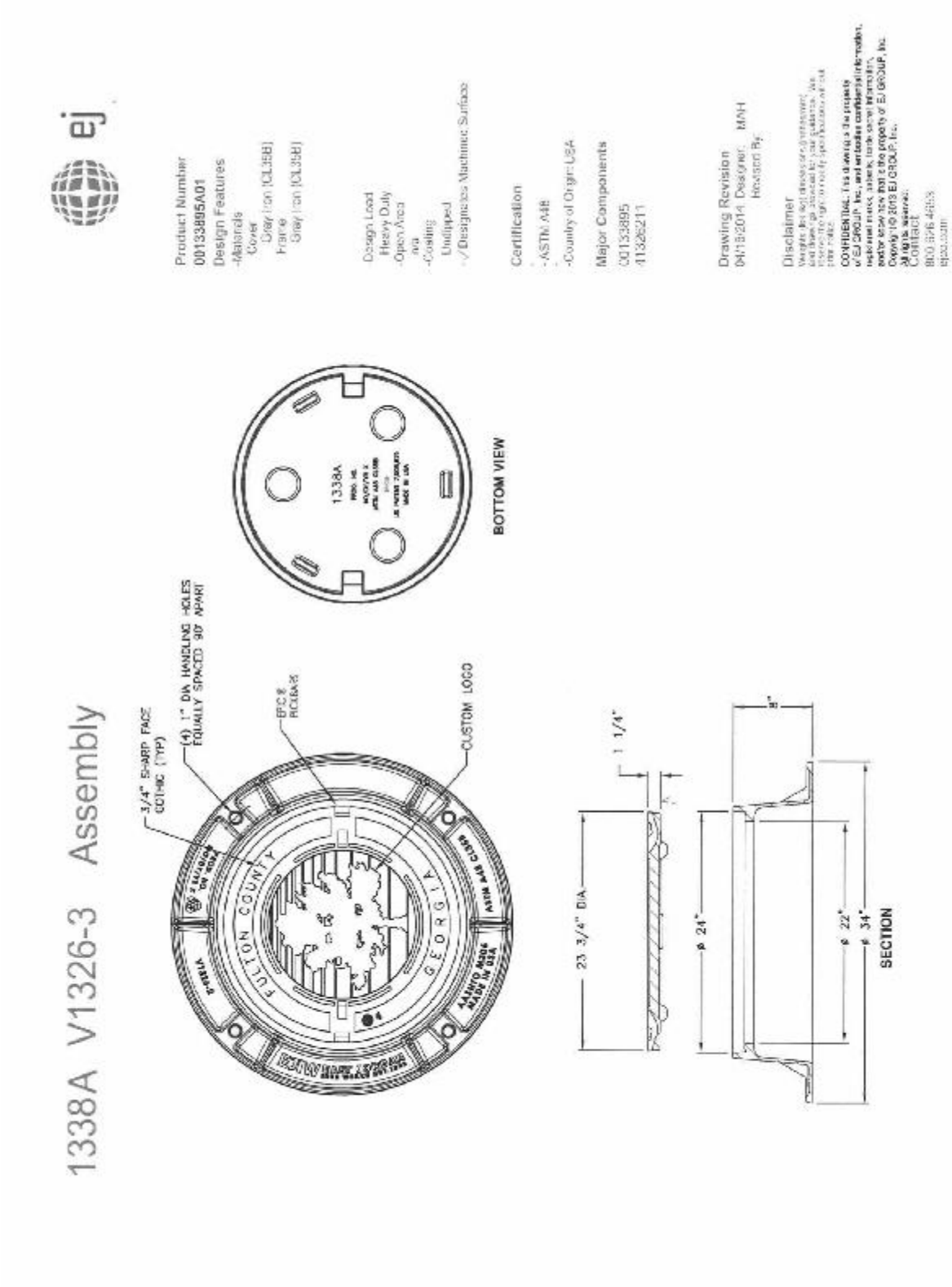

MANHOLE RING IN COVER IN PAVEMENT

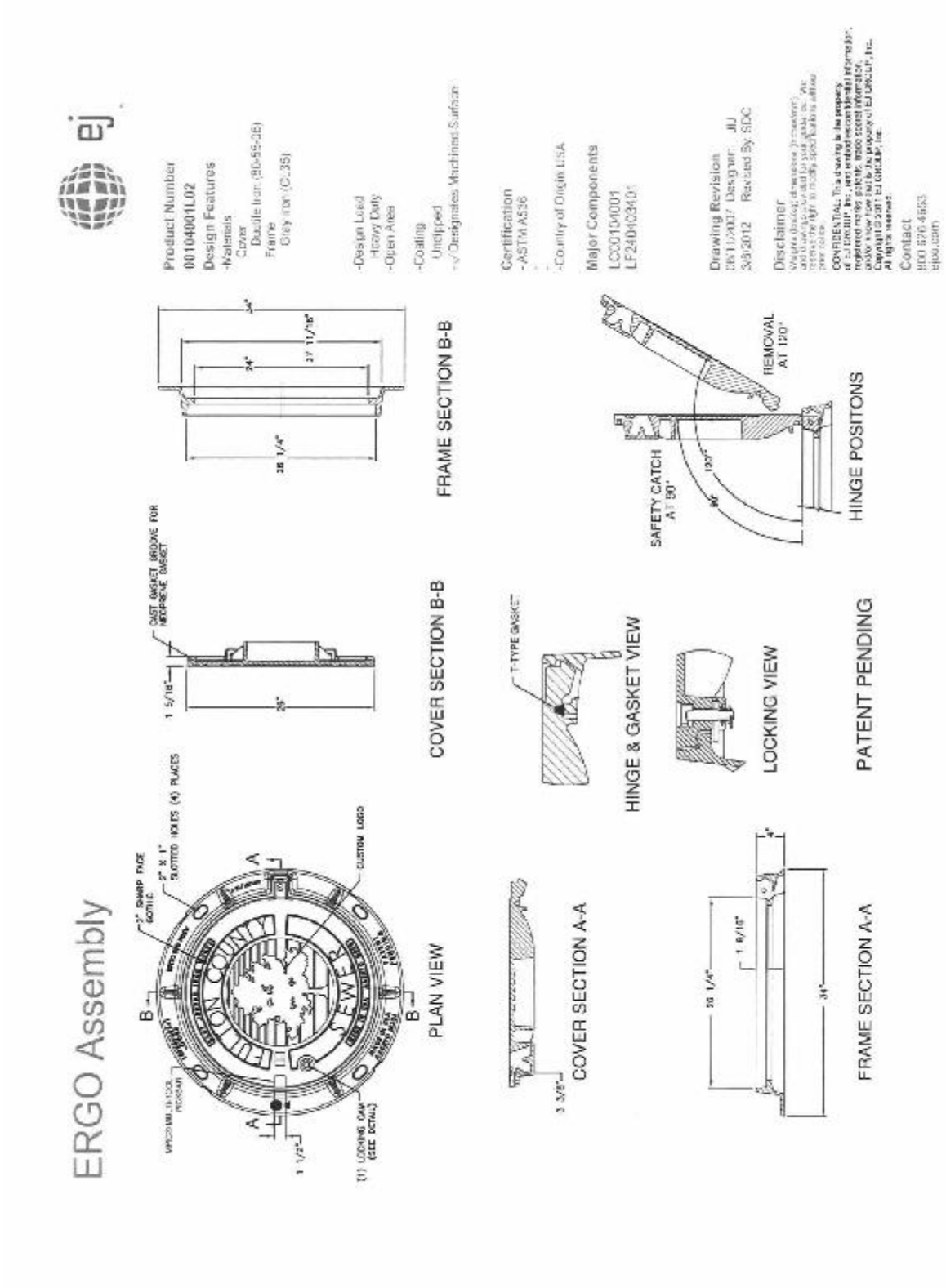

MANHOLE RING AND COVER IN LANDSCAPE OR NATURAL AREA

G. COATING SYSTEMS:

The interior surface of manholes below the cast iron frame and cover elevations shall be coated with coating system EA-2 in accordance with Section 09900.

PART 3--EXECUTION

3.01 GENERAL

Precast Concrete Manhole Sections: Precast concrete manhole sections shall be set so as to be vertical, with sections in true alignment. The joint of the previously set section shall be covered with joint sealant before the next section is placed. Excess joint sealant shall be removed prior to installation of mortar to cover the joint.

All coating shall be installed in strict conformance with the manufacturers written instructions and in accordance with Section 09900. Concrete Coating at the top of the manhole base shall be terminated to the underside of the fiberglass or cast iron manhole frame with adhesive. Manhole plastic lining shall be joined to pipe plastic lining (if present) with weld strips.

Existing and new manhole frames and covers shall not be set to final grade until the pavement has been completed, unless otherwise approved by the Construction Manager. Reinforced concrete manhole collars shall be installed as shown. Openings in manholes shall be protected from construction loads, debris and unauthorized entry.

Testing: All manholes shall be tested as specified in paragraph 02601-3.10.

3.02 EXCAVATION AND BACKFILL

Perform as specified in Section 02200.

Backfill Around Manholes: Use backfill for trench immediately adjacent to the manhole. Backfill around manholes shall be in accordance with Section 02200.

3.03 BASE ROCK

Place minimum of 6-inches of #57 Stone material and thoroughly compact with a mechanical vibrating or power tamper.

3.04 CONCRETE BASES AND INVERTS

Construct concrete base as shown on the Plans.

The trough shall have the same cross-section as the sewer to which it connects. Changes in direction of flow through the sewer shall be made to a true curve with as large a radius as the size of the manhole will permit.

Vibrate to densify concrete and screed so first precast manhole section to be placed has a level, uniform bearing for full circumference. Use steel impression ring to create a groove into which the first barrel section tongue can be inserted.

Install preformed sealing gasket and first manhole barrel section. Properly locate and plumb first section.

If material in bottom of trench is unsuitable for supporting manhole, excavate below the base as directed by the Construction Manager, and backfill to required grade with material, as specified in Section 02200.

3.05 PLACING PRECAST MANHOLE SECTIONS

Provide preformed joint sealer unless otherwise shown or directed by the Construction Manager.

Install in accordance with manufacturer's instructions and the following:

Carefully inspect precast manhole sections to be joined.

Seal all open pick holes with cement mortar using one part Portland cement to two parts clean sand, meeting ASTM C144.

Do not use sections with chips or cracks in the tongue.

Use pipe primer when recommended by manhole supplier or when confronted with wet concrete or temperatures below 40 degrees F.

Install gasket material in accordance with manufacturer's instructions.

Completed Manholes shall be rigid and watertight.

3.06 MANHOLE EXTENSIONS

Install extensions as shown, to height not exceeding 12 inches.

Lay grade rings in joint sealant with sides plumb and tops level. Seal joints as specified for manhole sections and make watertight.

3.07 MANHOLE GRADE ADJUSTMENT

A. CONCRETE RINGS:

In general, provide manhole extensions on manholes in streets or other locations where a subsequent change in existing grade may be likely. Limit extensions to maximum height of 12 inches.

B. BRICK:

Brickwork required to complete the precast concrete manhole shall be constructed using 1 part Portland cement to 2 parts clean sand, meeting ASTM C144, thoroughly mixed to a workable plastic mixture.

Brickwork shall be constructed in a neat and workmanlike manner.

Cement mortar shall be used to grout interior exposed brick joints and faces.

No more than 3 courses of brick with 9 inch maximum total depth of brick may be used to adjust manhole covers.

Masonry work shall be allowed to set for a period of not less than 24 hours. All loose or waste material shall be removed from the interior of the manhole.

3.08 MANHOLE FRAMES AND COVERS

Install on top of manholes to positively prevent infiltration of surface or groundwater into manholes.

Set frames in 8-inch concrete collar as shown on the Plans.

Set tops of covers flush with surface of adjoining pavement and 18 inches above ground surface in unpaved areas, unless otherwise shown or directed.

3.09 COATING SYSTEMS

Coatings shall be applied in conformance with manufacturer's written instructions and in accordance with Section 09900.

3.10 FIELD QUALITY CONTROL

A. HYDROSTATIC TESTING:

Hydrostatically test all project manholes prior to backfilling.

Prior to hydrostatic testing, all manholes shall be visually inspected for leaks. All leaks or cracks shall be repaired by the Contractor with nonshrink grout prior to hydrostatic testing and to the satisfaction of the Construction Manager.

Preparation: Install watertight plugs in all sewer pipes entering or exiting manhole and fill manhole with water to a height 2 inches below the bottom of the cover frame.

A manhole may be filled 24 hours prior to time of testing, if desired, to permit normal absorption into the pipe walls to take place. Refill to specified water height at initiation of test.

Duration of tests shall be a minimum of four (4) hours.

Leakage in each manhole shall not exceed 0.1 gallon per hour per foot of head above the invert.

Repair manholes that do not meet the leakage test, or do not meet specified requirements from visual inspection. Retest the manhole at no additional cost to the Owner.

The exterior of the manhole shall be inspected during this period for visible evidence of leakage. Visible moisture, sweating, or beads of water on the exterior of the manhole shall not be considered leakage, but any water running across the surface will be considered leakage and shall be repaired to the satisfaction of the Construction Manager regardless of the volume of water lost.

As an alternative to manhole hydrostatic testing, the Contract Manager may request the substitute use of vacuum testing. Following installation of air-tight plugs on all sewer pipes entering or exiting the manhole and installation of a test hood at the top of the manhole, a vacuum of 10 inches of mercury shall be drawn on the manhole, the valve on the vacuum line of the test hood closed and the vacuum pump shut off. The test shall have passed if there is 1 inch of mercury or less vacuum drop during a 1-minute test period.

B. INSPECTION:

After installation, demonstrate that all manholes have been properly installed, level, with tight joints, at the correct elevations and orientations and that the backfilling has been carried out in accordance with the Contract Documents.

END OF SECTION

SECTION 02712

STORM DRAINAGE SYSTEM

PART 1—GENERAL

1.01 DESCRIPTION

Outside, underground sewer systems, complete, ready for operation, including all drainage structures, and connections to new building and structure service lines, and to existing sewer lines and existing drainage structures.

1.02 RELATED WORK

Excavation, Trench Widths, Pipe Bedding, Backfill, Shoring, Sheeting, Bracing: Section 02200, EARTHWORK.

Concrete work reinforcing, placement and finishing; Section 03300, CAST IN PLACE CONCRETE.

1.03 QUALITY ASSURANCE

A. PRODUCTS CRITERIA:

1. MULTIPLE UNITS: When two or more units of the same type or class of materials or equipment are required, these units shall be products of one manufacturer.

2. NAMEPLATES: Nameplate bearing manufacturer's name, or identifiable trademark, securely affixed in a conspicuous place on equipment, or name or trademark cast integrally with equipment, stamped, or otherwise permanently marked on each item of equipment.

   Comply with regulations of Public Utility Authorities having jurisdiction in all cases where sewers are connected to Public Utility Services.

1.04 SUBMITTALS

Manufacturers' Literature and Data: Submit the following as one package:

1. Piping
2. Jointing Material
3. Manhole and Grate Inlet Material
4. Frames and Covers
5. Steps
6. Running Traps
7. Gate Valves
8. Valve Boxes

1.05 APPLICABLE PUBLICATIONS

The publications listed below form a part of this specification to the extent referenced. The publications are referenced in the text by the basic designation only.

American Society for Testing and Materials (ASTM):

A74 94	Cast Iron Soil Pipe and Fittings
A123 89	Zinc (Hot Dip Galvanized) Coatings on Iron and Steel Products
A746-86	Ductile Iron Gravity Sewer Pipe
C12 95	Installing Vitrified Clay Pipe Lines
C14 94	Concrete Sewer, Storm Drain, Culvert Pipe
C32 93	Sewer and Manhole Brick (Made from Clay or Shale)
C76 95	Reinforced Concrete Culvert, Storm Drain and Sewer Pipe
C139 95	Concrete Masonry Units for Construction of Catch Basins and Manholes
C150-95	Portland Cement
C425 91	Compression Joints for Vitrified Clay Pipe and Fittings
C443 94	Joints for Circular Concrete Sewer and Culvert Pipe, Using Rubber Gaskets
C478 95	Precast Reinforced Concrete Manhole Sections
C564 95	Rubber Gaskets for Cast Iron Soil Pipe and Fittings
C700 91	Vitrified Clay Pipe, Extra Strength, Standard Strength, and Perforated
C828 90	Low Pressure Air Test of Vitrified Clay Pipe Lines
D2321-89	Underground Installation of Flexible Thermoplastic Sewer Pipe (Rev A)
D2922-91	Practice for Obtaining Hydrostatic Design Basis for Fiberglass Pipe and Fittings
D2997-90	Centrifugally Cast Fiberglass (GFRTR) Pipe
D3034-94	Type PSM Poly (Vinyl Chloride) (PVC) Sewer Pipe and Fittings
D3139 95	Joints for Plastic Pressure Pipes Using Flexible Elastomeric Seals
D3212 92	Joints for Drain and Sewer Plastic Pipes Using Flexible Elastomeric Seals
F477 95	Elastomeric Seals (Gaskets) for Joining Plastic Pipe

F794 95	Poly (Vinyl Chloride) (PVC) Ribbed Gravity Sewer Pipe and Fittings Based on Controlled Inside Diameter
F949-95	Poly (Vinyl Chloride) (PVC) Corrugated Sewer Pipe with Smooth Interior, 100 mm to 450 mm (4” to 18”)

American Water Works Association (AWWA):

C104 90	Cement Mortar Lining for Ductile Iron Pipe and Fittings for Water
C110 93	Ductile Iron and Gray Iron Fittings, 80 mm (3 inches) through 1200 mm (48 inches) for Water and Other Liquids
C111 90	Rubber Gasket Joints for Ductile Iron and Gray Iron Pressure Pipe and Fittings
C115 94	Flanged Ductile Iron Pipe with Threaded Flanges
C151 93	Ductile Iron Pipe, Centrifugally Cast In Metal Molds or Sand Lined Molds, for Water or other Liquids
C500 93	Gate Valves, for Water and Sewage Systems
C509-94	Resilient Seated Gate Valves for Water and Sewerage Systems
C600 93	Installation for Ductile Iron Water Mains and their Appurtenances
C900 89	Polyvinyl Chloride (PVC) Pressure Pipe, 100 mm (4 inches) Through 300 mm (12 inches) for Water Distribution

American Association of State Highway and Transportation Officials (AASHTO):

M304M-91	Poly (Vinyl Chloride) (PVC) Ribbed Drain Pipe and Fittings

PART 2—PRODUCTS

2.01 PIPING

A. GRAVITY LINES (PIPE AND FITTINGS):

1. Cast Iron Soil: ASTM A74.

2. Vitrified Clay: ASTM C700.

3. Concrete:

   a. Reinforced, ASTM C76. (12” thru 108”)

4. Polyvinyl Chloride (PVC):

   a. ASTM D3034, SDR 35 for 4 to 15 inch.

b. ASTM F949 for 4 to 18 inch.

c. ASTM F794 for 18” to 36”

d. AASHTO M304M for 18” to 48”

5. Ductile Iron Pipe (DIP) for Sanitary Sewer: ASTM A746

6. Fiberglass Pipe for Acid Waste Water: ASTM D2992.

B. PRESSURE LINES (PIPE FITTINGS):

1. Ductile Iron: AWWA C151 and C110. Cement mortar lining, AWWA C104.

2. Polyvinyl Chloride (PVC): PVC pipe, AWWA C900, Class 150. Fittings gray iron or ductile iron, AWWA C110, with cement mortar lining, AWWA C104.

2.02 JOINTING MATERIAL

1. Cast Iron Pipe: Rubber gasket, ASTM C564.

2. Clay Pipe: Rubber gasket, ASTM C425.

3. Concrete Pipe: Rubber gasket ASTM C443.

4. Ductile Iron Pipe: Push on or mechanical joints, AWWA C111. Flanged joints, AWWA C115, use above grade.

5. Polyvinyl Chloride (PVC) Pipe (Gravity Use): Joints, ASTM D3212. Elastomeric gasket, ASTM F477.

6. Polyvinyl Chloride (PVC) Pipe (Pressure Use):

a. Push on or mechanical joints, ASTM D3139 or AWWA C111.

b. Push on joints for pipe, ASTM F477.

c. Push on and mechanical joints for connections between pipe and fittings, AWWA C111.

2.03 MANHOLES AND INLETS

In accordance with the local jurisdiction. Where the structures are located within state right of way or the local jurisdiction does not have standards, the State Department of Transportation shall govern.

2.04 SEWERAGE STORAGE TANKS

Provide single wall fiberglass reinforced plastic (FRP) U. L. labeled underground storage tanks as shown on the drawings. Size and fittings shall be as shown on drawings.

A. LOADING CONDITIONS:

Tanks shall meet the following design criteria:

1. Internal Load: Tank shall withstand without leakage a 5 psi air pressure test with 5 to 1 safety factor. Contractor shall test prior to installation as this is to test for leakage.

2. Vacuum Test: Every tank shall be tested to 11.5 inches of mercury vacuum by the tank manufacturer to assure structural integrity.

3. Surface Loading: Tank shall withstand surface H-20 axle loads.

4. External hydrostatic pressure: Tank will withstand 7' of overburden with the hole fully flooded with a 3.1 safety factor against leaking.

B. FITTINGS:

1. All threaded fittings shall be of a material of construction consistent with the requirements of the U.L. label and located as per drawings.

2. All fittings shall be of sizes as shown on drawings.

C. MATERIALS:

Tanks shall be manufactured with 100% resin and glass fiber reinforcement with no sand filters.

D. DIMENSION:

1. Tank shall have nominal capacity as shown on drawings.

2. Tanks shall have 36" ID manway riser with complete cast iron frame and lid at finish grade.

2.05 ACID NEUTRALIZATION TANKS

Acid neutralization tanks shall be constructed of 1/4 plate non code mild carbon steel Preferred Suitable for rubber type lining with all welds double butt, continuous full welded, non-porous and ground smooth and having no crevices, offsets or sharpened edges. The bottom and side walls shall be lined with 1/4" thermoplastic sheet lining fused directly to white ceramic lining 2" thick laid in Permamite acid and alkali proof mortar. The tank shall include 42" ID manway riser constructed of steel shell with an interior corrosion resistant coating and complete cast iron frame and lid at the finish grade. Neutralizing charge shall be limestone, 3 inches in size.

2.06 RUNNING TRAPS

Cast iron soil pipe, ASTM A74.

2.07 GATE VALVES

AWWA C500, AWWA C509, 125 pound WSP. Asbestos packing is prohibited.

A. OPERATION:

1. Shall turn counterclockwise to open.
2. Underground: 2-inch nut for socket wrench operation.
3. Above Ground and In Pits: Handwheels.

B. JOINTS:

End of valve shall accommodate, or be adapted to, pipe furnished.

2.08 VALVE BOXES

1. Cast iron extension box with screw or slide type adjustment and flared base. Minimum thickness or metal shall be 3/16 inch. Box shall be of such length as will be adapted, without full extension, to depth of cover required over pipe at valve location.

2. Cast the word “STORM SEWER” “SAN. SEWER” on the cover.

3. Provide one "T" handle socket wrenches, of 5/8 inch round stock long enough to extend 2 feet above top of deepest valve box.

PART 3—EXECUTION

3.01 BUILDING SERVICE LINES

Install sewer service lines to point of connection within approximately 5 feet outside of buildings where service is required and make connections.

Where building services have not been installed, provide temporary plugs or caps.

3.02 ABANDONED MANHOLES AND INLETS

Cut down 2 feet below finished grade and fill with gravel or crushed rock and well tamped earth.

3.03 REGRADING

Raise or lower existing manholes, catch basins, area drains, floor drains, cleanout boxes and valve boxes and inlets in regraded areas and carefully remove, clean and reset cast iron frames and covers to finished grade.

3.04 CONNECTIONS TO EXISTING MANHOLES

Make pipe connections and alterations to existing manholes so that finished work will conform as nearly as practicable to the applicable requirements specified for new manholes, including concrete and masonry work, cutting and shaping.

3.05 PIPE SEPARATION

A. HORIZONTAL SEPARATION - WATER MAINS AND SEWERS:

1. Water mains shall be at least ten feet horizontally from any proposed drain, storm sewer, sanitary sewer or sewer service connection.

2. Water mains may be located closer than ten feet to a sewer line when:

   a. Local conditions prevent a lateral separation of ten feet; and

   b. the water main invert is at least 18 inches above the crown of the sewer; and

   c. the water main is either in a separate trench or in the same trench on an undisturbed earth shelf located to one side of the sewer.

3. When it is impossible to meet (1) or (2) above, both the water main and drain or sewer shall be constructed of slip-on or mechanical joint ductile iron pipe or PVC pipe equivalent to water main standards of construction. The drain or sewer shall be pressure tested to the maximum expected surcharge head before backfilling.

B. VERTICAL SEPARATION - WATER MAINS AND SEWERS:

1. A water main shall be separated from a sewer so that its invert is a minimum of 18 inches above the crown of the drain or sewer whenever water mains cross storm sewers, sanitary sewers, or sewer service connections. The vertical separation shall be maintained for that portion of the water main located within ten feet horizontally of any sewer or drain crossed. A length of water main pipe shall be centered over the sewer to be crossed with joints equidistant from the sewer or drain.

2. Both the water main and sewer shall be constructed of slip-on or mechanical ductile pipe or PVC pipe equivalent to water main standards of construction when;

   a. it is impossible to obtain the proper vertical separation as described in (1) above/or

   b. the water main passes under a sewer or drain.

3. A vertical separation of 18 inches between the invert of the sewer or drain and the crown of the water main shall be maintained where a water main crosses under a sewer. Support the sewer or drain lines to prevent settling and breaking the water main.

4. Construction shall extend on each side of the crossing until the perpendicular distance from the water main to the sewer or drain line is at least ten feet.

3.06 INSTALLATION

1. Lay pipes true to line and grade with bells upgrade.

2. Do not lay pipe on unstable material, in wet trench or when trench and weather conditions are unsuitable for the work.

3. Support pipe on compacted bedding material.

4. Inspect pipes and fittings, for defects before installation. Defective materials shall be plainly marked and discarded. Cut pipe shall have smooth regular ends at right angles to axis of pipe.

5. Clean interior of all pipe thoroughly before installation. When work is not in progress, open ends of pipe shall be closed securely to prevent entrance of trench water, dirt or other substances.

6. Lower pipe into trench carefully and bring to proper line, grade, and joint. After jointing, interior of each pipe shall be thoroughly wiped or swabbed to remove any dirt, trash or excess jointing materials.

7. Do not lay sewer pipe in same trench with another pipe or other utility. Sanitary sewers shall cross at least 2 feet below water lines.

8. Do not work over, or walk on, pipe in trenches until covered by layers of earth well tamped in place to a depth of 12 inches over pipe.

9. Cast Iron Soil Piping: Comply with pipe manufacturer's recommendations.

10. Ductile Iron Piping: AWWA C111 and C600.

11. Vitrified Clay Piping: ASTM C12.

12. Concrete Piping: ASTM C12.

13. Polyvinyl Chloride (PVC) Piping: ASTM D2321.

3.07 MANHOLES AND INLETS

A. GENERAL:

1. Circular structures shall be precast concrete segmental blocks, precast reinforced concrete rings, or precast reinforced concrete manhole risers and tops. Square structures shall be reinforced concrete. Provide cast iron frames and covers. Do not build structures when air temperature is 0 degrees C (32 degrees F), or below.

2. Invert channels shall be smooth and semicircular in shape conforming to inside of adjacent sewer section. Make changes in direction of flow with a smooth curve of as large a radius as size of structure will permit. Make changes in size and grade of channels gradually and evenly. Construct invert channels by one of the listed methods:

   a. Forming directly in concrete base of structure.

   b. Building up with brick and mortar.

3. Floor of structure outside the channels shall be smooth and slope toward channels not less than 1:10 (1-inch per foot) nor more than 1:5 (2 inches per foot). Bottom slab and benches shall be concrete.

4. Construct wall that support access rungs or ladder 90 degrees vertical on the inside wall face in the same place from floor of structure to manhole cover.

B. TYPES:

1. Precast Concrete Segmental Blocks: Not less than 6 inches thick to a depth of 12 feet; not less than 8 inches thick below 12 feet deep and be not less than 8 inches in length. Use blocks shaped so that joints seal and bond effectively with cement mortar. Parge structure exterior with 1/2 inch of cement mortar applied with a trowel and finished to an even glazed surface.

2. Precast Reinforced Concrete Rings: Rings or sections shall have an inside diameter of not less than 48 inches and have a wall thickness conforming to requirements of ASTM C76, except that lengths of the sections may be shorter as conditions require. Tops shall conform to ASTM C478. Tops 4 feet deep and less may be concentric or eccentric cone type. Tops over 4 feet deep shall be eccentric cone type only. Built in steps work on inside wall face in the same plane from bottom of structure to manhole cover.

3. Precast Reinforced Concrete Manhole Risers and Tops: Design, material and installation shall conform to requirements of ASTM C478. Tops 4 feet deep and less may be eccentric or concentric cone. Tops over 4 feet deep shall be eccentric cone. Built in steps work on inside wall face in the same plane from bottom of structure to manhole cover.

4. Square Manholes: As shown of reinforced concrete.

C. MORTAR:

1. Brick and precast concrete block structures: By volume, 1 part of Portland cement, l/4 part lime hydrate, and 3 parts sand.

2. Precast reinforced concrete ring and riser structures: By volume, 1 part of Portland cement and 2 parts sand. Water in mixture shall produce a stiff, workable mortar, but shall not exceed 5 l/2 gallons per sack of cement.

3.08 CURB INLETS, CATCH BASINS, AND AREA DRAINS

Reinforced concrete as shown or precast concrete.

3.09 SEWER AND MANHOLE SUPPORTS, CONCRETE CRADLES, AND END WALLS

Reinforced concrete as shown.

3.10 DRY WELL

As shown.

3.11 GREASE REMOVAL SYSTEM PIT

1. Reinforced concrete as shown.

2. Pipe and Fittings: ASTM A74, cast iron soil pipe, service weight, for use inside of trap, between trap and buildings, and between trap and manhole.

3.12 OIL AND GREASE INTERCEPTING TRAP

Reinforced concrete as shown. Cast iron frame and cover as specified for manholes.

3.13 CLEANOUTS

Six inches in diameter and consisting of a ductile iron 45 degree fitting on end of run, or combination Y fitting and l/8 bend in the run with cast iron pipe extension, and cast frame and cover flush with finished grade. Center set cleanouts, located in unpaved areas, in a 12 by 12 by 6 inch thick concrete slab set flush with adjacent finished grade. Where cleanout is in force main, provide ferrules and trap screws that can withstand pressure without leaking.

3.14 SETTING OF VALVES

1. Set no valves under pavement except where shown on the drawings.
2. Clean valve interior before installation.
3. Set valve box cover flush with the finished grade.

3.15 INSPECTION OF SEWERS

Inspect and obtain the Contract Manager's approval. Thoroughly flush out before inspection. Lamp between structures and show full bore indicating sewer is true to line and grade. Lips at joints on the inside of sewer are prohibited.

3.16 TESTING OF SANITARY SEWERS

A. GRAVITY SEWERS:

1. Air Test: ASTM C828.

2. Exfiltration Test:

   a. Subject pipe to hydrostatic pressure produced by head of water at depth of 3 feet above invert of sewer at upper manhole under test. In areas where ground water exists, head of water shall be 3 feet above existing water table. Maintain head of water for one hour for full absorption by pipe body before testing. During one hour test period, measured maximum allowable rate of exfiltration for any section of sewer shall be 3.0 gallons per hour per 100 feet.

   b. If measurements indicate exfiltration is greater than maximum allowable leakage, take additional measurements until leaks are located. Repair and retest.

3. Infiltration Test: If ground water level is greater than 900 mm (3 feet) above invert of the upper manhole, infiltration tests are acceptable. Allowable leakage for this test will be the same as for the exfiltration test.

B. PRESSURE SEWERS:

Test at 100 psi for 1 hour. Leakage shall be per the following:

Pipe Size (inches)	Maximum Leakage (gal/1,000 ft)
(4”)	0.30
(6”)	0.45
(8”)	0.60

C. TESTING OF SEWAGE HOLDING TANKS:

No leakage at 5 psi air pressure test with 5:1 safety factor. Test by contractor prior to installation.

END OF SECTION

SECTION 02713

WATER SYSTEM

PART 1—GENERAL

1.01 DESCRIPTION

Underground water distribution system complete, ready for operation, including all appurtenant structures, and connections to new building service lines and to existing water supply.

The System shall confirm with Fulton County and Cherokee County utility standards. In the case that there is a conflict, the more stringent between what is specified and the County standard shall be applicable.

1.02 RELATED WORK

1. Maintenance of existing utilities: Section 01010, GENERAL REQUIREMENTS.

2. Excavation, trench widths, pipe bedding, backfill, shoring, sheeting, bracing: Section 02200, EARTHWORK.

3. Concrete: Section 03300, CAST IN PLACE CONCRETE.

4. Protection of materials and equipment: Section 15050, BASIC METHODS AND REQUIREMENTS (MECHANICAL).

5. Fire protection system connection and supervisory switch for post indicator valve and fire protection system connections: applicable sections of Division 13.

1.03 QUALITY ASSURANCE

A. PRODUCTS CRITERIA:

1. Multiple units: When two or more units of the same type or class of materials or equipment are required, these units shall be product of one manufacturer.

2. Nameplate: Nameplate bearing manufacturer's name or identifiable trademark securely affixed in a conspicuous place on equipment or name or trademark cast integrally with equipment, stamped, or otherwise permanently marked on each item of equipment.

Comply with regulations of Public Utility authorities having jurisdiction in all cases where water lines are connected to Public Utility Services.

1.04 SUBMITTALS

1. Submit in accordance with Section 01340, SAMPLES AND SHOP DRAWINGS.

2. Manufacturers' Literature and Data (Submit all items as one package):

   a. Piping.
   c. Gaskets.
   d. Valves.
   e. Fire hydrants.
   f. Street washer.
   g. Meter.
   h. Frames and covers
   i. Steps.
   j. Post indicator.
   k. Valve boxes.
   l. Stops.
   m. Stop boxes.

1.05 APPLICABLE PUBLICATIONS

The publications listed below form a part of this specification to the extent referenced. The publications are referenced in the text by the basic designation only.

Federal Specifications (Fed. Spec.):

O C 114B(2)	Calcium Hypochlorite, Technical
O S 602E	Sodium Hypochlorite Solution
BB C 120C	Chloride, Technical: Liquid

American National Standards Institute (ANSI):

B16.26 88	Cast Copper Alloy Fittings for Flared Copper Tubes
B40.1 91	Gauges Pressure Indicating Dial Type Elastic Element

American Society of Sanitary Engineers (ASSE):

1013-93	Reduced Pressure Principle Backflow Preventers
1015-93	Double Check Backflow Prevention

American Society for Testing and Materials (ASTM):

A123 89	Zinc (Hot Dip Galvanized) Coatings on Iron and Steel Products
A148-93	Standard Specification for Steel Castings

A242-93	Standard Specification for High Strength low alloy structural Steel AASHTO No. M161
A307-94	Standard Specification for Carbon Steel Bolts and Studs, 60,00 psi Tensile Strength
A536-93	Standard Specification for Ductile Iron Fittings
B16.1-89.	Cast Iron Pipe Flanges and Flanged Fittings
B61 93	Steam or Valve Bronze Castings
B62 93	Composition Bronze or Ounce Metal Castings.
B88 95	Seamless Copper Water Tube
C32 93	Sewer and Manhole Brick (Made from Clay or Shale)
C139-95	Concrete Masonry Units for Construction of Catch Basins and Manholes

American Water Works Association (AWWA):

C32-93	Standard Specification for Sewer Manhole brick
C105-93	Polyethylene Encasement for Gray and Ductile C.I. Piping for water and other liquids
C110 93	Ductile Iron and Gray Iron Fittings, 80 mm (3 Inches) Through 1200 mm (48 Inches) for Water and Other Liquids
C111 90	Rubber Gasket Joints for Ductile Iron and Gray Iron Pressure Pipe and Fittings
C115 94	Flanged Ductile Iron and Gray Iron Pipe with Threaded Flanges
C151 93	Ductile Iron Pipe, Centrifugally Cast in Metal Molds or Sand Lined Molds, for Water or Other Liquids
C153 94	Ductile Iron Compact Fittings, 80 mm (3 inches) Through 300 mm (12 Inches) for Water and Other Liquids
C500 93	Gate Valves for Water and Sewerage Systems
C509-94	Resilient Seated Gate Valve for Water and Sewage System

C600 93	Installation for Ductile Iron Water Mains and Their Appurtenances
C651 92	Disinfecting Water Mains

National Fire Protection Association (NFPA):

24 95	Installation of Private Fire Service Mains and Their Appurtenances
291-95	Fire Flow testing and Marking of Hydrants
1141-90	Fire Protection in Planned Building Groups

American Welding Society (AWS):

A5.8 92	Brazing Filler Metal

PART 2—PRODUCTS

2.01 DUCTILE IRON PIPE AND FITTINGS:

A. DUCTILE IRON PIPE FOR BURIED SERVICE:

1. Provide ductile iron pipe conforming to the requirements of AWWA C151, Pressure class 250 minimum, with cement mortar lining interior, and interior and exterior asphaltic seal coat in accordance with AWWA and ANSI Standards.

2. Below Grade: Supply pipe in lengths not in excess of a nominal 20 feet with rubber ring type push-on joints, standard mechanical joint pipe or restrained joint where required. Provide flange joint pipe only where shown on the contract drawings. Provide mechanical and restrained joint pipe with sufficient quantities of accessories as required for each joint for below grade piping.

3. If required by the soil conditions provide a polyethylene encasement over pipe, fittings and valves. The material, installation and workmanship shall conform to applicable sections of AWWA C105. Make provisions to keep the polyethylene from direct exposure to sunlight prior to installation. Backfill following installation without delay to avoid exposure to sunlight.

Above grade or in below ground concrete pits:

1. Flanged ductile iron pipe, AWWA C115, with factory applied screwed long hub flanges except as otherwise specified hereinafter. Face and drill

flanges after being screwed on the pipe, with flanges true to 90 degrees with the pipe axis and flush with end of pipe, ANSI B16.1, 850 kPa or 1725 kPa (125 or 250 pound) standard, for the purpose intended.

2. Provide radius grooved ends for pipe used with split-type flexible coupling joints.

3. Wall Castings: Size and types shown on the contract drawings and be hot dipped galvanized. Seal strips, where required shall be Link Seal as manufactured by Thunderline Corp., Wayne, Michigan or equal.

4. Pipe thickness class: Minimum of Class 50 for all sizes of flanged pipe.

5. Rubber ring gaskets: Full face type, AWWA C111, 1.5 mm (1/16-inch) rubber ring gaskets and be of approved composition suitable for the required service.

6. Pipe and fittings exposed to view in the finished work are to be painted in accordance with Section 09900. Pipe shall not receive the standard tar or asphalt coat on the outside surfaces but shall be shop primed on the outside with one coat of Kop-Coat No. 621 Rust Inhibitive Primer or equal. Paint color shall match the wall color.

7. Bolts and nuts on flanged fittings: Grade B, ASTM A307. Low alloy, high strength steel equal to “Acipolly,” “Usalloy,” “Corten,” or stainless steel and conform to ANSI B16.1

B. ALL PIPE FITTINGS:

Ductile iron with a minimum pressure rating of 2413 kPa (350 psi). All pipes shall be Class 50 (thickness class) for 16-inch and smaller, and Class 51 for 20-inch and larger, unless otherwise specified or shown on the Drawings. Fittings shall meet the requirements of ANSI, and AWWA specifications as applicable. Rubber gasket joints shall conform to AWWA C111 for mechanical and push-on type joints. Ball joints shall conform to AWWA C151 with a separately cast ductile iron bell conforming to ASTM A148. Flanged fittings shall conform to AWWA C115 and be furnished flat faced and drilled to 850 kPa or 1725 kPa (125 or 250 pounds) template in accordance with ANSI B16.1 with full faced gaskets.

Provide cement mortar lining and bituminous seal coat on the inside of the pipe and fittings in accordance with AWWA C104.

Provide a factory hydrostatic test of not less than 3477 kPa (500 psi) for all pipe.

Provide non-detectable adhesive backed identification tape on top and sides of all buried ductile iron pipe, extended from joint to joint along the length of the pipe and have black lettering identifying the pipe service at no more than 300 mm (12”) intervals. According to service, the tape background color shall be as follows: // force main/sanitary-green; // potable water-blue; // reclaimed water-lavender. //

Pipe and fittings shall be as manufactured by the American Cast Iron Pipe Company, U.S. Pipe and Foundry Company, or equal.

2.02 COPPER PIPE AND TUBING

A. COPPER PIPING:

ASTM B88, type K, with sweat cast brass fittings. Use brazing alloy, AWS A5.8, Classification BCuP.

2.03 VALVES

Asbestos packing is not allowed.

A. GATE:

1. 80 mm (3 inch) and larger: Iron body, bronze mounted, double disc with parallel or inclined seats, non rising stem type turning counter clockwise to open, 1375 kPa (200 pound) WOG. AWWA C500 or C509.

2. Operations:

a. Underground: Except for use with post indicators, furnish valves with 50 mm (2 inch) nut for socket wrench operation. Valves used with post indicators shall be constructed for connection thereto.

b. Above ground and in pits: Hand wheels.

3. Joints: Ends of valves shall accommodate, or be adapted to, pipe installed.

B. CHECK: SWING.

1. Smaller than 100 mm (4 inch): Bronze body and bonnet, ASTM B61 or B62, 850 kPa (125 pound) WSP.

2. 100 mm (4 inch) and larger: Iron body, bronze trim, swing type, vertical or horizontal installation, flange connection, 1375 kPa (200 pound) WOG. Check valves for fire lines shall be Underwriters Laboratories approved.

C. CURB STOP:

Smaller than 80 mm (3 inch). Waterworks standard for type "K" copper, single piece cast bronze body with tee top operated plug sealed with O ring gaskets, 1200 kPa (175 pound) WOG.

2.04 CURB STOP BOX

Cast iron extension box with screw or slide type adjustment and flared base. Box shall be adapted, without full extension, to depth of cover required over pipe at stop location. Cast the word "WATER" in cover and set cover flush with finished grade. Curb stop shut off rod shall extend 600 mm (2 feet) above top of deepest stop box.

2.05 VALVE BOX

Cast iron extension box with screw or slide type adjustment and flared base. Minimum thickness of metal shall be 4.7 mm (3/16 inch). Box shall be adapted, without full extension, to depth of cover required over pipe at valve location. Cast the word "WATER" in cover. Provide three "T" handle socket wrenches of 16 mm (5/8 inch) round stock long enough to extend 600 mm (2 feet) above top of deepest valve box.

2.06 POST INDICATOR VALVE

Furnish with a padlock and angle wrench which can be locked at side of post when not in use. Lock indicator in open position. Padlock shall be pin tumbler mechanism, five or more pins, 50 mm (2 inch) solid brass case, steel shackle, and with chain and shackle, length as required. Chain shall be securely fastened to post indicator. Key in Construction Manager's set // as established at the station // as specified in Section 08710, BUILDERS HARDWARE.

2.07 FIRE HYDRANTS

Size of main valve opening of each hydrant shall be 125 mm (5-inch), minimum. Hose thread, size of fire apparatus connection, and shape, size and direction of rotation of operating head of hydrant shall be identical with // present local fire department and/or water department standards // those in use at station.

Hydrant shall be heavy construction, of proper length to connect pipe without extra fittings, and shall be the traffic type with safety flange on barrel and safety couplings on the valve stem with the following features:

1. Interior removable without digging up hydrant; can be packed under pressure; 150 mm (6 inch) bell connection; one steamer nozzle and two hose nozzles with nozzle caps securely chained to barrel; suitable drainage device; single rubber or leather faced valve in base; nozzles, stuffing boxes, wedge nuts, seat rings, clamp plates, etc. Threaded joints or spindles shall be bronze. Upper and lower barrels shall be of equal diameters. Upper barrel shall be of sufficient length to permit setting hydrant with barrel flange not more than 50 mm (2 inch) above finished grade. All fire hydrants shall have 150 mm (6-inch) bottom connection.

2. Provide fire hydrants with a finish paint identical to the existing fire hydrants.

Provide three wrenches with handles not less than 350 mm (14 inch) long.

2.08 PIPE SLEEVES

Cast iron or zinc coated steel.

2.9 STREET WASHER

Cast iron body with valve and working parts made of brass. Provide three keys.

2.10 BACKFLOW PREVENTER

A. DOMESTIC SERVICE:

Reduced Pressure Principle type ASSE 1013, except pressure drop at rated flow shall not exceed 100 kPa (15 psi).

B. FIRE SERVICE:

Double detector check valve with meter. ASSE 1015.

2.11 WATER METER

Furnished and set by Public Service Company.

Furnished by Public Service Company and installed by Contractor.

Furnish and install meter approved by Public Service Company. Forward approval.

2.12 PIT (BACKFLOW PREVENTER OR METER)

Top and base shall be reinforced concrete.

Walls shall be reinforced concrete, precast concrete segmental block (ASTM C139) or manhole brick (ASTM C32).

2.13 CAST IRON FRAME AND COVER, STEPS, ETC.

Shall comply with Fulton County Department of Public Works standard details. Identify cover as “WATER”.

2.14 FLEXIBLE EXPANSION JOINTS (PROVIDE FOR DOMESTIC AND FIRE SERVICE)

Ductile iron with ball joints rated for 1725 kPa (250 PSI) working pressure conforming to ANSI/AWWA A21.53/C153, capable of deflecting a minimum of 30 degrees and expanding simultaneously to the amount shown on the contract drawings. Flexible expansion joint shall have the expansion capability designed as an integral part of the ductile iron ball castings. Pressure containing parts shall be lined with a minimum of 15 mils of fusion bonded epoxy conforming to the applicable requirements of ANSI/AWWA C213 and shall be factory holiday tested with a 1500 volt spark test. Flexible expansion joint shall have flanged connections conforming to ANSI/AWWA A21.11/C110. Bolts and nuts shall be 316 stainless steel and gaskets shall be neoprene.

PART 3—EXECUTION

3.01 BUILDING SERVICE LINES

Install water service lines to point of connection within approximately 1500 mm (5-feet) outside of buildings to which such service is to be connected and make connections thereto. If building services have not been installed provide temporary caps.

3.02 REGRADING

Raise or lower existing valve and curb stop boxes and fire hydrants to finish grade in areas being graded.

3.03 PIPE LAYING, GENERAL

Care shall be taken in loading, transporting, and unloading to prevent injury to the pipe or coatings. Pipe or fittings shall not be dropped. All pipe or fittings shall be examined before laying, and no piece shall be installed which is found to be defective. Any damage to the pipe coatings shall be repaired as directed by the Engineer.

All pipe and fittings shall be subjected to a careful inspection just prior to being laid or installed. If any defective piping is discovered after it has been laid it shall be removed and replaced with a sound pipe in a satisfactory manner at no additional expense to the Owner. All pipe and fittings shall be thoroughly cleaned before laying, shall be kept clean until they are used in the work, and when installed or laid, shall conform to the lines and grades required.

All buried piping shall be installed to the lines and grades as shown on the contract drawings. All underground piping shall slope uniformly between joints where elevations are shown.

Contractor shall exercise extreme care when installing piping to shore up and protect from damage all existing underground water line and power lines, and all existing structures.

Do not lay pipe on unstable material, in wet trench, or, when trench or weather conditions are unsuitable.

Support pipe laid in fill area at each joint by brick or concrete piers carried down to solid undisturbed earth.

Do not lay pipe in same trench with other pipes or utilities.

Hold pipe securely in place while joint is being made.

Do not work over or walk on pipes in trenches until covered by layers of earth well tamped in place to a depth of 300 mm (12 inch) over pipe.

Full length of each section of pipe shall rest solidly upon pipe bed with recesses excavated to accommodate bells or joints. Do not lay pipes on wood blocking.

Install water lines to avoid heating trenches and storm and sanitary sewer lines.

Tees, plugs, caps, bends and hydrants on pipe installed underground shall be anchored.

Close pipe openings with caps or plugs during installation. Tightly cover and protect equipment against dirt, water and chemical, or mechanical injury. At completion of all work, thoroughly clean exposed materials and equipment.

3.04 DUCTILE IRON PIPE

A. INSTALLING PIPE:

Lay pipe in accordance with AWWA C600 with polyethylene encasement if required in accordance with AWWA C105. Provide a firm even bearing throughout the length of the pipe by tamping selected material at the sides of the pipe up to the spring line. THRUST BLOCKING WILL NOT BE PERMITTED.

All pipe shall be sound and clean before laying. When laying is not in progress, the open ends of the pope shall be closed by watertight plug or other approved means. Good alignment shall be preserved in laying. The deflection at joints shall not exceed that recommended by the manufacturer.

When cutting pipe is required, the cutting shall be done by machine, leaving a smooth cut at right angles to the axis of the pipe. Bevel cut ends of pipe to be used with push-on bell to conform to the manufactured spigot end. Cement lining shall be undamaged.

B. JOINTING DUCTILE-IRON PIPE:

1. Push-On joints shall be made in strict accordance with the manufacturer's instruction. Pipe shall be laid with bell ends looking ahead. A rubber gasket shall be inserted in the groove of the bell end of the pipe, and the joint surfaces cleaned and lubricated. The plain end of the pipe is to be aligned with the bell of the pipe to which it is joined, and pushed home with a backhoe or other means.

2. Mechanical joints at valves, fittings: In accordance with AWWA C111. To assemble the joints in the field, thoroughly clean the joint surfaces and rubber gaskets with soapy water before tightening the bolts. Bolts shall be tight to the specified torque.

3. Ball Joints: Install in strict accordance with the manufacturer's instructions. Where ball joint assemblies occur at the face of structures the socket end shall be at the structure and ball end assembled to the socket.

4. Flanged joints shall be in accordance with AWWA C115. Flanged joints shall be fitted so that the contact faces bear uniformly on the gasket and then are made up with relatively uniform bolt stress.

3.05 COPPER PIPE

Copper piping shall be installed in accordance with the manufacturer's recommendations. Copper piping shall be bedded in 150 mm (6") of sand and then back filled as specified in Section 02200.

3.06 PIPE SUPPORTS

A. SUPPORTS:

1. All piping shall be properly and adequately supported. Hangers, supports, base elbows and tees, and concrete piers and pads shall be provided as indicated on the contract drawings. If the method of support is not indicated on the contract drawings, exposed piping shall be supported by hangers wherever the structure is suitable and adequate to carry the superimposed load. Supports shall be placed approximately 2.4 m (8 feet) on centers and at each fitting.

2. Hangers shall be heavy malleable iron of the adjustable swivel type, split ring type, or the adjustable-swivel, pipe-roll type for horizontal piping and adjustable, wrought iron, clamp type for vertical piping. Flat steel strap or chain hangers are not acceptable unless indicated on the contract drawings.

3. Hangers shall be attached to the structure, where possible, by beam clamps and approved concrete inserts set in the forms before concrete is poured. Where this method is impractical, anchor bolts with expanding lead shields, Rawl Drives, or malleable iron expansion shields will be permitted.

4. Where hangers cannot be used, the Contractor shall provided pipe saddle supports with pipe column and floor flange.

Restrained joints shall be used as shown on the contract drawings. Thrust blocks shall not be used.

3.07 RESTRAINED JOINTS

Sections of piping requiring restrained joints shall be constructed using pipe and fittings with restrained "Locked-type" joints and the joints shall be capable of holding against withdrawal for line pressures 50 percent above the normal working pressure but not less than 1025 kPa (150 psi). The pipe and fittings shall be restrained push-on joints or restrained mechanical joints.

The minimum number of restrained joints required for resisting force at fittings and changes in direction of pipe shall be determined from the length of retained pipe on each side of fittings and changes in direction necessary to develop adequate resisting friction with the soil. Restrained pipe length shall be as shown on the contract drawings.

Restrained joint assemblies with ductile iron mechanical joint pipe shall be “Flex-Ring”, “Lok-Ring”, or mechanical joint coupled as manufactured by American Cast Iron Pipe Company, “Mega-Lug” or approved equal.

Ductile iron pipe bell and spigot joints shall be restrained with EBBA Iron Sales, Inc. Series 800 Coverall or approved equal.

Ductile iron mechanical joints fittings shall be restrained with EBBA Iron Sales, Inc. Series 1200 Restrainer. The restraining device shall be designed to fit standard mechanical joint bells with standard T head bolts conforming to AWWA C111 and AWWA C153. Glands shall be manufactured of ductile iron conforming to ASTM A536. Set screws shall be hardened ductile iron and require the same torque in all sizes. Steel set screws not permitted. These devices hall have the stated pressure rating with a minimum safety factor of 2:1. Glands shall be listed with Underwriters Laboratories and/or approved by Factory Mutual.

Thrust blocks shall not be permitted.

Where ductile iron pipe manufactured with restrained joints is utilized, all restrained joints shall be fully extended and engaged prior to back filling the trench and pressurizing the pipe.

Ductile iron mechanical joint fittings used with PVC pipe shall be restrained with UNI-Flange Corp. Series 1300 Restrainer, EBBA Iron, Inc, Series 2000PV Mechanical Joint Restrainer Gland, or approved equal. The restraining device and Tee head bolts shall be manufactured of high strength ductile iron meeting ASTM A-536. Clamping bolts and nuts shall be manufactured of corrosion resistant high strength, low alloy steel meeting the requirements of ASTM A242.

3.08 PIPE SEPARATION

A. HORIZONTAL SEPARATION-WATER MAINS AND SEWERS:

1. Water mains shall be located at least 3 m (10 feet) horizontally form any proposed drain, storm sewer, sanitary or sewer service connection.

2. Water mains may be located closer than ten feet to a sewer line when:

    a. Local conditions prevent a lateral separation of 3 m (10 feet); and

    b. the water main invert is at least 450 mm (18 inches) above the crown of the sewer; and

    c. the water main is either in a separate trench or in the same trench on an undisturbed earth shelf located one side of the sewer.

3. When it is impossible to meet (1) or (2) above, both the water main and drain or sewer shall be constructed of slip-on or mechanical joint ductile iron pipe or PVC pipe equivalent to water main standards of construction. The drain or sewer shall be pressure tested to the maximum expected surcharge head before back filling.

B. VERTICAL SEPARATION-WATER MAINS AND SEWERS:

1. A water ,maim shall be separated from a sewer so that its invert is a minimum of 450 mm (18 inches) above the crown of the drain or sewer whenever water mains cross storm sewers, sanitary sewers or sewer service connections. The vertical separation shall be maintained for that portion of the wear main located within ten feet horizontally of any sewer or drain crossed. A length of water main pipe shall be centered over the sewer to be crossed with joints equidistant from the sewer or drain.

2. Both the water main and sewer shall be constructed of slip-on or mechanical joint ductile iron pipe or PVC pipe equivalent to water main standards of construction when:

   a. it is impossible to obtain the proper vertical separations described in (1) above; or

   b. the water main passes under a sewer or drain.

3. A vertical separation of 450 mm (18 inches) between the invert of the sewer or drain and the crown of the water main shall be maintained where a water main crosses under a sewer. Support the sewer or drain lines to prevent settling and breaking the water main.

4. Construction shall extend on each side of the crossing until the perpendicular distance from the water main to the sewer or drain line is at least 3 m (ten feet)

3.9 SETTING OF VALVES

1. Provide a surface concrete pad [450 by 450 by 150 mm (18 by 18 by 6 inches)] to protect valve box when valve is not located below pavement.

2. Clean valve and curb stops interior before installation.

3. Set valve and curb stop box cover flush with finished grade.

3.10 SETTING OF FIRE HYDRANTS

Set center of each hydrant not less than 600 mm (2-feet) or more than 1800 mm (6 feet) back of edge of road or face of curb. Fire apparatus connection shall face road with center of nozzle 460 mm (18 inch) above finished grade. Set barrel flange not more than 50 mm (2 inch) above finished grade.

Set each hydrant on a slab of stone or concrete not less than 100 mm (4 inch) thick and 380 mm (15 inch) square. Wedge back of hydrant firmly against vertical face of trench with concrete thrust block to prevent hydrant from blowing off line. If hydrant cannot be satisfactorily blocked in this manner, provide bridle rods of 20 mm (3/4 inch) round stock and pipe clamps of 50 mm by 15 mm (2 inch by 1/2 inch) stock. Rods and clamps shall be thoroughly covered with bituminous paint to prevent corrosion.

Set bases in not less than 0.4 cubic meter (1/2 cubic yard) of crushed rock or gravel placed entirely below hydrant drainage device.

Clean interiors of hydrants of all foreign matter before installation.

3.11 PIPE SLEEVES

Install where water lines pass through retaining walls , building foundations and floors. Seal with modular mechanical type link seal. Install piping so that no joint occurs within a sleeve. Split sleeves may be installed where existing lines pass through new construction.

3.12 STREET WASHER

Set drain in 0.10 cubic meter (four cubic feet) of crushed rock or gravel.

3.13 FLUSHING AND DISINFECTING

Flush and disinfect new water lines in accordance with AWWA C651.

A. MATERIAL:

1. Liquid chlorine: Fed. Spec. BB C 120.
2. Hypochlorite: Fed. Spec. O C 114; or, Fed. Spec. O S 602, Grade B.

3.14 TESTS

After new system is installed, except for connections to existing system, backfill at least 300 mm (12 inch) above pipe barrel, leaving joints exposed.

Subject new system to pressure and leakage tests for two hours to 1375 kPa (200 PSI). Leakage shall not exceed the following requirements.

1. Copper Tubing: No leaks.
2. Ductile Iron Pipe: AWWA C600.

END OF SECTION

SECTION 03100

FORMWORK

PART 1--GENERAL

1.01 DESCRIPTION

This section specifies formwork requirements for concrete construction.

1.02 QUALITY ASSURANCE

A. REFERENCES:

This section contains references to the documents listed below. They are a part of this section as specified and modified. Where a referenced document cites other standards, such standards are included as references under this section as if referenced directly. In the event of conflict between the requirements of this section and those of the listed documents, the requirements of this section shall prevail.

Unless otherwise specified, references to documents shall mean the documents in effect at the time of Advertisement for Bids or Invitation to Bid (or on the effective date of the Agreement if there were no Bids). If referenced documents have been discontinued by the issuing organization, references to those documents shall mean the replacement documents issued or otherwise identified by that organization or, if there are no replacement documents, the last version of the document before it was discontinued. Where document dates are given in the following listing, references to those documents shall mean the specific document version associated with that date, regardless of whether the document has been superseded by a version with a later date, has been discontinued or has been replaced.

Reference	Title
ACI 117	Standard Specifications for Tolerances for Concrete Construction and Materials
ACI 301	Specifications for Structural Concrete
ACI 318	Building Code Requirements for Structural Concrete
ACI 350	Code Requirements for Environmental Engineering Concrete Structures
ACI 347R	Guide to Formwork for Concrete
National Institute of Standards - PS1	Construction and Industrial Plywood

B. DESIGN:

Formwork design requirements shall conform to the following:

1. Formwork, shoring and reshoring shall be designed by a Professional Engineer currently registered in the State of the project having a minimum of 3 years experience in this type of design work.

2. Design and engineering of formwork, shoring and reshoring, as well as its construction, is the sole responsibility of the Contractor.

3. A procedure and schedule shall be developed for removal of shores (and installation of reshores) and for calculating the loads transferred to the structure during this process.

4. Structural calculations shall be prepared as required to prove that all portions of the structure, in combination with the remaining forming and shoring system, have sufficient strength to safely support their own weight plus the loads placed thereon.

5. When developing procedure, schedule and structural calculations, consideration shall be made regarding the structural system that exists, effects of all imposed loads and the strength of concrete at each stage of construction.

C. DESIGN CRITERIA:

Design of formwork shall conform to the following criteria:

1. Formwork shall be designed for loads, lateral pressures and allowable stresses outlined in ACI 347R and for design considerations, wind loads, allowable stresses and other applicable requirements of the controlling local building code. Where conflicts occur between the above two standards, the more stringent requirements shall govern.

2. Formwork shall be designed to limit maximum deflection of form facing materials reflected in concrete surfaces exposed to view to 1/240 of span between structural members.

1.03 SUBMITTALS

Submittals shall be provided in accordance with Section 01300 and shall include the following information:

1. Manufacturer's product data, installation instructions and acknowledgement that products submitted meet requirements of standards referenced for

   a. Form materials

b. Form ties.

c. Form release compound.

d. Void forms.

2. Formwork designer qualifications.

3. Submit letter of certification stamped by the registered Engineer referenced in paragraph 1.02B.1 that formwork has been designed in accordance with the specifications.

4. If requested, structural analysis and concrete strength data used in planning and implementing form removal and shoring.

PART 2--PRODUCTS

2.01 FORMS

A. WOOD FORMS:

Wood forms shall be new and unused exterior grade plywood panels manufactured in accordance with APA (American Plywood Association) and bearing the trademark of that group. Forms for all concrete surfaces exposed to view shall be APA High Density Overlay (HDO) Plyform Class I Exterior 48" X 96" X 3/4" minimum thickness. Forms for other concrete surfaces shall be APA Douglas Fir B-B Plyform Class I Exterior 48” X 96” X 3/4” minimum thickness.

When approved by the Engineer, plywood may be reused.

B. METAL FORMS:

Metal forms excluding aluminum may be used. Forms shall be free of rust and straight without dents to provide members of uniform thickness.

2.02 FORM TIES

Form ties shall be commercially fabricated for use in form construction and shall be constructed so that ends or end fasteners can be removed without causing spalling at surfaces of the concrete. Diameter on ends shall be 3/4 inch minimum to 1 inch maximum. Embedded portion of ties shall be not less than 1 1/2 inch from face of concrete after ends have been removed. Ties with integral waterstops shall be provided in all water-retaining structures and in below grade structures exposed to a ground water level above the base slab.

2.03 FORM RELEASE COMPOUND

Coat all forming surfaces in contact with concrete using an effective, non-staining, non-residual, water based, bond-breaking form coating unless otherwise noted. Form

release agents used in potable water containment structures shall be suitable for use in contact with potable water and shall be non-toxic and free of taste and odor.

PART 3--EXECUTION

3.01 PREPARATION

Preparation shall conform to the following:

1. Surfaces of forms shall be covered with an approved form release compound prior to form installation. Application shall be in accordance with manufacturer's recommendations.

2. Excess form coating material shall not be permitted to stand in puddles in forms nor in contact with hardened concrete against which fresh concrete is to be placed.

3. Surfaces of forms, reinforcing steel and other embedded materials shall be cleaned of any accumulated mortar or grout from previous concreting and of all other foreign material before concrete is placed.

3.02 CONSTRUCTION

Formwork construction shall conform to the following:

1. Forms shall be used for all cast-in-place concrete including sides of footings and grade beams.

2. Forms shall be constructed and placed so that the resulting concrete will be of the shape, lines, dimensions, and appearance indicated on the Drawings. Forms shall be braced or tied together to maintain their position and shape under a load of freshly-placed concrete.

3. Forms shall be sufficiently tight to prevent leakage.

4. Temporary openings shall be provided at base of column and wall forms and at other points where necessary to facilitate cleaning and observation immediately before concrete is placed, and to limit height of free fall of concrete to prevent aggregate segregation.

5. Temporary openings, also called form "windows", shall be used to limit height of free fall of concrete and to limit the lateral movement of concrete during placement. Openings are required in wall placements greater than 20 feet in height and shall be spaced so that no more than 8 feet of solid form exists between openings measured horizontally and vertically.

6. A 3/4-inch chamfer strip shall be placed in exposed to view corners of the forms to produce a 3/4-inch wide beveled edge.

7. At construction joints, contact surface of form sheathing for flush surfaces exposed to view over hardened concrete in previous placement shall be overlapped by at least 1 inch. Forms against hardened concrete shall be held to prevent offsets or loss of mortar at construction joint and to maintain a true surface. Where possible, juncture of built-in-place wood or metal forms shall be located at architectural lines, control joints or at construction joints.

8. Where circular walls are formed and forms made up of straight sections are proposed for use, straight lengths not exceeding 2 feet wide shall be provided for curved surfaces with a radius of 25 feet to 100 feet. Straight form lengths not exceeding 3 feet wide may be used for curved surfaces with a radius of 100 feet and larger. Formwork shall be braced and tied to maintain correct position and shape of members.

9. Wood forms for wall openings shall be constructed to facilitate loosening, if necessary, to counteract swelling. Formwork shall be anchored to shores or other supporting surfaces of members so that movement of any part of formwork system is prevented during concrete placement.

10. Runways for moving equipment shall be provided with struts or legs, supported directly on formwork or structural members without resting on reinforcing steel.

11. A positive means of adjustment (wedges or jacks) of shores and struts to take up all settlement during concrete placing operation shall be provided. Forms shall be securely braced against lateral deflection. Wedges used for final adjustment of forms shall be fastened prior to concrete placement in position after final check.

12. When permitted, taper form ties shall be placed with the larger end on the side of the structure that will be in contact with liquid. Use of taper ties does not relieve the Contractor from their responsibility to construct watertight liquid-containing structures.

3.03 TOLERANCES

Formwork tolerances shall be in accordance with ACI 117 and the following. If a discrepancy is found between the requirements below and ACI 117, the more stringent requirement shall control:

1. Products shall be installed in accordance with manufacturer’s written instructions.

2. Surfaces of columns, piers, walls, and risers shall vary from plumb a maximum of 1/2 inch for entire height and 1/4 inch in 10 feet of height. Exposed corner columns, control-joint grooves, and other exposed to view lines shall vary from plumb a maximum of 1/2 inch for entire length and 1/4 inch in 20 feet of length.

3. Maximum variation from level or from grade shall be 3/4 inch for entire length, 3/8 inch for any bay or 20 foot length, and 1/4 inch in 10 feet of length for slab soffits, ceilings, and beam soffits, measured before removal of supporting shores and shall be 1/2 inch for entire length and 1/4 inch in 20 feet of length for exposed lintels, sills, parapets, horizontal grooves, and other exposed-to-view lines.

4. Maximum variation of linear structure lines from established position in plan and related position of columns, walls, and partitions shall be 3/4 inch for entire length and 3/8 inch for any bay or 20 foot length.

5. Maximum variation in size and location of sleeves, floor openings, and wall openings and variation in horizontal plan location of beam, column and wall centerlines shall be ± 1/2 inch

6. Maximum variation in cross sectional dimensions of columns and beams and in thickness of slabs and walls shall be ± 3/8 inch and in concrete plan dimensions for footings and foundations shall be - 1/2 inch + 2 inches.

7. Maximum misplacement or eccentricity of footings and foundations shall be 2 percent of footing width in direction of misplacement, but not more than 2 inches.

8. Specified thickness of footings and foundations may be decreased by up to 5 percent with no maximum increase except that which may interfere with other construction.

9. Maximum step variance in the flight of stairs for Rise is ± 1/8 inch and for Tread is ± 1/4 inch and in consecutive steps for Rise is ± 1/16 inch and for Tread is ± 1/8 inch.

10. Sufficient control points and benchmarks to be used for reference purposes to check tolerances shall be established and maintained in an undisturbed condition until final completion and acceptance of the work.

11. Regardless of tolerances listed, no portion of a structure shall be allowed to extend beyond the legal boundary of work site.

12. To maintain specified tolerances, formwork shall be cambered to compensate for anticipated deflections in formwork prior to hardening of concrete.

3.04 REMOVAL OF FORMS

Removal of forms shall conform to the following:

1. No construction loads shall be supported on, nor any shoring removed from, any part of the structure under construction except when that portion of the structure in combination with remaining forming and shoring system has sufficient strength to safely support its weight and loads placed thereon.

2. When required for concrete curing in hot weather, required for repair of surface defects or when finishing is required at an early age, forms shall be removed as soon as concrete has hardened sufficiently to resist damage from removal operations or lack of support.

3. Top forms on sloping surfaces of concrete shall be removed as soon as concrete has attained sufficient stiffness to prevent sagging. Any needed repairs or treatment required on such sloping surfaces shall be performed at once, followed by curing specified in Section 03300.

4. Wood forms for wall openings shall be loosened as soon as this can be accomplished without damage to concrete.

5. Formwork for columns, walls, sides of beams, and other parts not supporting weight of concrete may be removed as soon as concrete has hardened sufficiently to resist damage from removal.

6. Where no reshoring is planned, forms and shoring used to support weight of concrete shall be left in place until concrete has attained its specified 28-day compressive strength.

7. When shores and other vertical supports are so arranged that non-load-carrying form facing material may be removed without loosening or disturbing shores and supports, facing material may be removed when concrete has sufficiently hardened to resist damage from removal.

8. Where tapered form ties are allowed, after cleaning, tie holes for tapered ties shall be filled with a mechanical waterstop plug near the center of the wall with non-shrink cement grout fill on both sides of the plug. Use of taper ties does not relieve the Contractor from their responsibility to construct watertight liquid containing structures.

3.05 RESHORING

Reshoring shall conform to the following:

1. No construction loads shall be supported on, nor any shoring removed from, any part of the structure under construction except when that portion of the structure in combination with remaining forming and shoring system has sufficient strength to safely support its weight and loads placed thereon.

2. While reshoring is underway, no superimposed dead or live loads shall be permitted on the new construction.

3. During reshoring, concrete in structural members shall not be subjected to combined dead and construction loads in excess of loads that structural members can adequately support.

4. Reshores shall be placed as soon as practicable after stripping operations are complete, but in no case later than the end of working day on which stripping occurs.

5. Reshores shall be placed to carry their required loads without overstressing.

6. Where a reshoring procedure is planned, supporting formwork may be removed when concrete has reached the concrete strength by the formwork engineer's structural calculations.

**END OF SECTION*

SECTION 03121

FORM LINERS

PART 1- GENERAL

1.01 DESCRIPTION

A. Work of this section includes plastic form liners and polyurethane form liners.

1.02 SUBMITTALS

A. The following submittals shall be provided.

1. A copy of this specification section, with addendum updates included, and all referenced and applicable sections, with addendum updates included, with each paragraph check-marked to indicate specification compliance or marked to indicate requested deviations from specification requirements. Check marks, "**P**", shall denote full compliance with a paragraph as a whole. If deviations from the specifications are indicated, and therefore requested by the Contractor, each deviation shall be underlined and denoted by a number in the margin to the right of the identified paragraph, referenced to a detailed written explanation of the reasons for requesting the deviation. The Engineer shall be the final authority for determining acceptability of requested deviations. The remaining portions of the paragraph not underlined will signify compliance on the part of the Contractor with the specifications. Failure to include a copy of the marked-up specification sections, along with justification(s) for any requested deviations to the specification requirements, with the submittal shall be sufficient cause for rejection of the entire submittal with no further consideration.
2. Submit manufacturer's catalog data, detail sheets, and written instructions.
3. Shop drawings indicating form liner layout and termination details. Include jointing, form tie location and pattern of placement.
4. Submit (1) - 1 foot square sample of liner, or full scale rendering (drawing) with sufficient annotation to confirm compliance with specified profile.

1.03 DELIVERY, STORAGE, AND HANDLING

A. Protect liners from sunlight, dirt, and debris.

PART 2 - PRODUCTS

2.01 MANUFACTURERS

A. Form liner shall be Number 304 as manufactured by Greenstreak, Inc., 3400 Tree Court Industrial Blvd., St. Louis, MO 63122, or equal.

2.02 MATERIALS

A. Form liner shall thermoformed rigid polymer alloy sheets.

2.03 FORM LINER ACCESSORIES

A. Rustication strip shall have 1 ½ inches face and be manufactured of ABS plastic.

PART 3 - EXECUTION

3.01 PREPARATION AND INSTALLATION

A. Attach form liners to forms with spacing not to exceed 18 inches. Apply form liner manufacturer approved release agents according to manufacturer's recommendations. Repair cuts or tears adhesive or other method approved by manufacturer to result in acceptable final appearance. Seal edges to prevent cement leakage. Provide solid backing at form liner butt joints to prevent deflection. Drill or piece liner to accept form ties. Clean form liner between uses with an approved detergent and brush.

3.02 CONCRETE PLACEMENT

A. Place and cure concrete according to Section 03300. Vibrate thoroughly but with care not to damage form liner. Follow manufacturer's recommendations for special handling.

3.03 COMPLETION

A. Remove forms and form liners according to Section 3300 and manufacturer's written instructions. Do not remove in such manner as to damage or alter concrete surface from the form liner profile. Patch damaged areas with polymer concrete, profiling mortar or other method approved by the Engineer. Lightly sandblast or wire brush surface to remove fins and other deviations from the form liner profile. Cleanup and dispose of form liner materials as per local regulations.

END OF SECTION

SECTION 03155

PRECAST POLYMER CONCRETE TRENCH DRAIN

PART 1--GENERAL

1.01 DESCRIPTION

A. SCOPE:

This section specifies precast polymer concrete trench drain system including accessories necessary to install system.

B. SINGLE SOURCE RESPONSIBILITY:

The Contractor shall cause all trench drains and grates provided under this section to be the product of a single firm regularly engaged in the manufacture of these products.

1.02 SUBMITTALS

The following submittals shall be provided in accordance with Section 01300.

1. A copy of this specification section, with addendum updates included, and all referenced and applicable sections, with addendum updates included, with each paragraph check-marked to indicate specification compliance or marked to indicate requested deviations from specification requirements. Check marks (✓) shall denote full compliance with a paragraph as a whole. If deviations from the specifications are indicated, and therefore requested by the Contractor, each deviation shall be underlined and denoted by a number in the margin to the right of the identified paragraph, referenced to a detailed written explanation of the reasons for requesting the deviation. The Construction Manager shall be the final authority for determining acceptability of requested deviations. The remaining portions of the paragraph not underlined will signify compliance on the part of the Contractor with the specifications. Failure to include a copy of the marked-up specification sections, along with justification(s) for any requested deviations to the specification requirements, with the submittal shall be sufficient cause for rejection of the entire submittal with no further consideration.

2. Manufacturer's catalog data, including construction features, dimensional data, technical information, which define details of construction that demonstrate compliance with this specification.

3. Complete shop drawings showing dimensioned trench drain layout including part numbers and all necessary details and instructions for installation.

4. Manufacturer of trench drain shall have a minimum of five years successful

installations of projects similar in scope to project.

5. Fabricator to be experienced in successfully producing custom polymer drainage fabrications similar to requirements of the project.

1.03 DESIGN REQUIREMENTS

Where vehicular traffic is to be expected, trench drain and grate shall be Load Class D (minimum). Where vehicular traffic is not expected, trench drain and grate shall be Load Class B (minimum).

1.04 PROTECTION

Trench drains shall be boxed, crated, or otherwise completely enclosed and protected during shipment, handling, and storage.

PART 2--PRODUCTS

2.01 GENERAL

Trench drains shall be precast made of polymer concrete. Units shall have anchoring ribs to mechanically engage into surrounding concrete. Drain width shall be as indicated on the drawings, four inches minimum width where not specifically indicated.

Trench drains bottom shall be either sloped with a minimum built-in slope of 0.6 % or flat.

Shallow trench drains, with flat bottom, shall not be less than 3 ½ inches in depth nor exceed 4 inches in depth.

If not specifically indicated on the drawings, provide non-shallow 4 inch wide trench drain units with sloped bottom.

2.02 ACCEPTABLE MANUFACTURERS

Trench drains and grates shall be as manufactured by Strongwell, Lenoir City, Tennessee, ABT, Troutman, North Carolina or ACO Polymer Products, Inc., Chardon, Ohio, or equal.

2.03 TRENCH DRAINS

Four-inch-wide trench drains shall be Strongwell's Polycast 600 Series or ACO's KS100S (stainless steel edge rail) Series.

Four-inch-wide shallow (nonslope) drains shall be Strongwell's Polycast 500 Series or ACO's H100 Series.

2.04 GRATES

Grates where vehicular traffic is to be expected shall be a slotted ductile iron grate. Grates where vehicular traffic is not expected shall be vinyl ester bar fiberglass. Grates shall have lock down devices.

2.05 ACCESSORIES

Provide all necessary installation pieces.

Provide end caps at terminations of runs. Provide necessary transition pieces for female-to-female connections and male-to-male connections when required.

Catch basins shall be precast polymer concrete with corrugated plastic trash buckets. Fully interlocking with trench drains with tongue and groove connections.

PART 3--EXECUTION

3.01 INSTALLATION

Installation shall be in accordance with manufacturer's recommendations.

END OF SECTION

SECTION 03200

CONCRETE REINFORCEMENT

PART 1--GENERAL

1.01 DESCRIPTION

This section specifies reinforcing steel for use in reinforced concrete.

1.02 QUALITY ASSURANCE

A. REFERENCES:

This section contains references to the following documents. They are a part of this section as specified and modified. Where a referenced document contains references to other standards, those documents are included as references under this section as if referenced directly. In the event of conflict between the requirements of this section and those of the listed documents, the requirements of this section shall prevail.

Unless otherwise specified, references to documents shall mean the documents in effect at the time of Advertisement for Bids or Invitation to Bid (or on the effective date of the Agreement if there were no Bids). If referenced documents have been discontinued by the issuing organization, references to those documents shall mean the replacement documents issued or otherwise identified by that organization or, if there are no replacement documents, the last version of the document before it was discontinued. Where document dates are given in the following listing, references to those documents shall mean the specific document version associated with that date, regardless of whether the document has been superseded by a version with a later date, discontinued or replaced.

Reference	Title
ACI 117	Standard Specifications for Tolerances for Concrete Construction and Materials
ACI 315	Details and Detailing of Concrete Reinforcement
ACI 318	Building Code Requirements For Structural Concrete and Commentary
ACI SP-66	ACI Detailing Manual
ASTM A82	Steel Wire, Plain, for Concrete Reinforcement
ASTM A185	Steel Welded Wire, Fabric, Plain for Concrete Reinforcement
ASTM A615/A615M REV B	Deformed and Plain Billet-Steel Bars for Concrete Reinforcement

Reference	Title
ASTM A706/A706M REV B	Low-Alloy Steel Deformed Bars for Concrete Reinforcement
ASTM A775/A775M REV B	Epoxy-Coated Reinforcing Steel Bars
ASTM A884/A884M	Epoxy-Coated Steel Wire and Welded Wire Reinforcement
AWS D1.4	Structural Welding Code--Reinforcing Steel
CRSI-PRB	Recommended Practice for Placing Reinforcing Bars
CRSI-MSP 1	Manual of Standard Practice
FEDSPEC QQ-W-461H	Wire, Steel, Carbon (Round, Bare, and Coated)

B. SHIPPING, HANDLING AND STORAGE:

Reinforcing steel shall be shipped to the jobsite with attached plastic or metal tags having permanent mark numbers which match the shop drawing mark numbers. All reinforcing shall be supported and stored above ground. Use only plastic tags secured to the reinforcing steel bars with nylon or plastic tags for epoxy coated reinforcing steel bars.

C. FABRICATION:

Reinforcing steel bars shall be fabricated in accordance with ACI 315 and the following tolerances:

1. Sheared lengths shall be within +/- 1 inch.
2. Overall dimensions of stirrups, ties, and spirals shall be within +/- ½ inch.
3. All other bends shall be within +0 inch, -½ inch
4. Minimum diameter of bends of reinforcing steel bars shall be as indicated in ACI-318 paragraph 7.2.

1.03 SUBMITTALS

Submittals shall be provided in accordance with Section 01300 and shall include the following:

1. Mill certificates for all reinforcing.

2. Manufacturer and type of proprietary reinforcing steel splices. A current ICC Report and manufacturer's literature that contains instructions and recommendations for each type of coupler used shall be submitted.

3. Manufacturer and type of reinforcing steel adhesive anchor. A current ICC Report and manufacturer's literature that contains instruction and

recommendations for each type of adhesive anchor to be used shall be submitted.

4. Qualifications of welding operators, welding processes and procedures.

5. Reinforcing steel shop drawings showing reinforcing steel bar quantities, sizes, spacing, dimensions, configurations, locations, mark numbers, lap splice lengths and locations, concrete cover and reinforcing steel supports. Reinforcing steel shop drawings shall be of sufficient detail to permit installation of reinforcing steel without reference to the contract drawings. Shop drawings shall not be prepared by reproducing the plans and details indicated on the contract drawings but shall consist of completely redrawn plans and details as necessary to indicate complete fabrication and installation of reinforcing steel, including large scale drawings at joints detailing bar placement in congested areas. Placement drawings shall be in accordance with ACI 315. Reinforcing details shall be in accordance with ACI SP-66.

PART 2--PRODUCTS

2.01 BAR REINFORCEMENT

Reinforcing steel bars shall be deformed billet steel in conformance with ASTM A615, Grade 60. Bars to be welded shall be deformed billet steel conforming to ASTM A706. Where specified, reinforcing steel shall be epoxy-coated in conformance with ASTM A775.

2.02 WIRE FABRIC

Wire fabric shall be welded steel mesh conforming to ASTM A185.

2.03 WIRE AND PLAIN BARS

Wire used as reinforcement and bars used as spiral reinforcement in structures shall be cold drawn steel conforming to ASTM A82.

2.04 SMOOTH DOWEL BARS

Smooth dowel bars shall conform to ASTM A615, Grade 60, with a metal end cap at the greased or sliding end to allow longitudinal movement.

2.05 EPOXY COATED BARS

Epoxy coated bars shall conform to ASTM A775 and ASTM A884.

2.06 EPOXY COATED REINFORCING STEEL BAR PATCHING MATERIAL

Epoxy coated reinforcing steel bar patching material shall be compatible with coating material, inert in concrete, obtained from manufacturer of the epoxy resin used to coat the reinforcing steel bars and meet the requirements of ASTM A775.

2.07 REINFORCING STEEL MECHANICAL SPLICES

Reinforcing steel mechanical splices shall be a positive connecting threaded type mechanical splice system manufactured by Erico, Inc., Dayton Superior, Williams Form Engineering Company, or approved equal.

Type 1 mechanical splices shall develop in tension or compression a strength of not less than 125 percent of the ASTM specified minimum yield strength of the reinforcement and shall meet all other ACI 318 requirements. Type 1 mechanical splices are typical except for locations noted below where Type 2 mechanical splices are required.

Type 2 mechanical splices shall meet the requirements for a Type 1 mechanical splice, plus develop the ASTM specified tensile strength of the reinforcement. Type 2 mechanical splices shall be provided at locations specifically noted on the design drawings.

2.08 TIE WIRE

The wire shall be minimum 16 gage annealed steel conforming to FEDSPEC QQ-W-461H.

2.09 BAR SUPPORTS

Bar supports shall be located in accordance with CRSI MSP-1 and placed in accordance with CRSI PRB.

1. Manufactured concrete block bar supports with embedded tie wires (wire dobies) shall be provided for footing and slabs on grade. Do not use brick, broken concrete masonry units, spalls, rocks, construction debris, or similar material for supporting reinforcing steel.

2. Manufactured concrete block bar supports with embedded tie wires (wire dobies) shall be used at all formed concrete members where the concrete surface will be exposed to weather, fluid including water and wastewater, or soil.

3. CRSI Class 1 plastic protected or Class 2 stainless steel protected bar supports shall be provided for other work.

PART 3--EXECUTION

3.01 TOLERANCE

Reinforcing steel placement tolerance shall conform to the requirements of ACI 117, ACI 318, and the following:

1. Reinforcing steel bar clear distance to formed surfaces shall be within +/- ¼ inch of specified clearance and minimum spacing between bars shall be a maximum of ¼ inch less than specified.

2. Reinforcing steel top bars in slabs and beams shall be placed +/- $^{3}/_{8}$ inch of specified depth in members 8 inches deep or less and +/- ½ inch of specified depth in members greater than 8 inches deep.

4. Reinforcing steel spacing shall be placed within +/- one bar diameter or +/- 1 inch, whichever is greater.

4. The minimum clear distance between reinforcing steel bars shall be equal to the greater of 1 inch or the reinforcing steel bar diameter for beams, walls and slabs, and the greater of 1 ½ inches or 1.5 times the reinforcing steel bar diameter for columns.

5. Beam and slab reinforcing steel bars shall be threaded through column vertical reinforcing steel bars without displacing the column reinforcing steel bars and still maintain clear distances for beam and slab reinforcing steel bars.

3.02 CONCRETE COVER

Unless specified otherwise on the Drawings, reinforcing steel bar cover shall conform to the following:

1. Reinforcing steel bar cover shall be 3 inches for concrete cast against earth.

2. Reinforcing steel bar cover shall be 2 inches for all other locations.

3.03 SPLICING

Reinforcing steel splicing shall conform to the following:

1. Splice lengths in accordance with drawings shall be used for all reinforcing steel bars.

2. Unless noted otherwise on the Drawings, splices in circumferential reinforcement in circular walls shall be staggered. Adjacent hoop reinforcement splices shall be staggered horizontally by not less than one lap length (center of lap below to center of lap above) or 3 feet, whichever is greater, and shall not coincide in vertical arrays more frequently than every third bar.

3. Splicing of reinforcing elements noted as “tension tie” members on the Drawings shall be avoided whenever possible. If splices cannot be avoided, the splices shall be made with full mechanical splice capable of developing at least 125 percent of the specified yield strength of the bar. Splices in adjacent bars shall be staggered at least 30 inches.

4. For welded wire fabric the splice lap length measured between the outermost cross wires of each fabric sheet shall not be less than one spacing of cross wires plus 2 inches, nor less than 1.5 times the development length nor less than 6 inches.

5. Splices of reinforcement steel bars not specifically indicated or specified shall be subject to the approval of the Engineer. Mechanical proprietary splice connections may be used when approved by the Engineer or as indicated on the drawings.

6. Welding of reinforcing steel bars is not allowed unless approved by the Engineer.

3.04 CLEANING

Reinforcing steel bars at time of concrete placement shall be free of mud, oil, loose rust, or other materials that may affect or reduce bond. Reinforcing steel bars with rust, mill scale or a combination of both may be accepted without cleaning or brushing provided dimensions and weights including heights of deformation on a cleaned sample are not less than required by applicable ASTM standards.

3.05 PLACEMENT

Reinforcing steel bar placement shall conform to the following:

1. Uncoated reinforcing steel bars shall be supported and fastened together to prevent displacement by construction loads or concrete placement. For concrete placed on ground, furnish concrete block supports or metal bar supports with non-metallic bottom plates. For concrete placed against forms furnish plastic or plastic coated metal chairs, runners, bolsters, spacers and hangers for the reinforcing steel bar support. Only tips in contact with the forms require a plastic coating.

2. Coated reinforcing steel bars shall be fastened together to prevent displacement. Plastic or nylon ties shall be used to hold the coated reinforcing steel bars rigidly in place. The coated reinforcing steel bars shall be supported with plastic or plastic coated chairs, runners, bolsters, spacers and supports as required.

3. Support reinforcing steel bars over cardboard void forms by means of concrete supports which will not puncture or damage the void forms nor impair the strength of the concrete member.

4. Where parallel horizontal reinforcement in beams is indicated to be placed in two or more layers, reinforcing steel bars in the upper layers shall be placed directly over the reinforcing steel bars in the bottom layer with the clear distance between each layer to be 2 inches unless otherwise noted on the Drawings. Spacer reinforcing steel bars shall be placed at a maximum of 3’-0” on center to maintain the minimum clear spacing between layers.

5. Reinforcement shall be extended to within 2 inches of formed edges and 3 inches of the concrete perimeter when concrete is placed against earth.

6. Reinforcing steel bars shall not be bent after embedding in hardened concrete.

7. Tack welding or bending reinforcing steel bars by means of heat is prohibited.

8. Where required by the contract documents, reinforcing steel bars shall be embedded into the hardened concrete utilizing an adhesive anchoring system specifically manufactured for that application. Installation shall be per the manufacturer's written instructions.

9. Bars with kinks or with bends not shown shall not be used.

10. Heating or welding bars shall be performed in accordance with AWS D1.4 and shall only be permitted where specified or approved by the Engineer.

3.06 REPAIR OF EPOXY COATING

Epoxy coating damage need not be repaired in cases where the damaged area is 0.1 square inch or smaller. All damaged areas larger than 0.1 square inch shall be repaired in conformance with ASTM A775.

3.07 FIELD QUALITY CONTROL

Field quality control shall include the following:

1. The Engineer shall be notified whenever the specified clearances between the reinforcing steel bars can not be met. The concrete shall not be placed until the Contractor submits a solution to the congestion problem and it has been approved by the Engineer.

2. The reinforcing steel bars may be moved as necessary to avoid other reinforcing steel bars, conduits or other embedded items provided the tolerance does not exceed that specified in Section 3.01. The Engineer's approval of the modified reinforcing steel arrangement is required where the specified tolerance is exceeded. No cutting of the reinforcing steel bars shall be done without written approval of the Engineer.

3. Coated reinforcing steel bars will be inspected on the jobsite for handling defects, coating abrasion, coating thickness and continuity of coating. Engineer may defer final inspection of the coated reinforcing steel bars until bar erection and handling is complete. Coated areas shall be repaired as directed by the Engineer and shall be completed prior to concrete placement.

4. An independent laboratory shall be employed to review and approve Contractor welding procedures and qualify welders in accordance with AWS D1.4. The laboratory shall visually inspect each weld for visible defects and conduct non-destructive field testing (radiographic or magnetic particle) on

not less than one sample for each 10 welds. If a defective weld is found, the previous 5 welds by the same welder shall also be tested.

END OF SECTION

SECTION 03300

CAST-IN-PLACE CONCRETE

PART 1--GENERAL

1.01 DESCRIPTION

This section specifies cast-in-place concrete which consists of furnishing all material, mixing and transporting equipment, and performing all labor for the proportioning, mixing, transporting, placing, consolidating, finishing, and curing of concrete in the structure.

1.02 QUALITY ASSURANCE

A. QUALITY CONTROL BY OWNER:

Special Inspection of concrete work shall be performed by the Special Inspector under contract with the Owner and in conformance with the IBC Chapter 17. Special Inspector(s) and laboratory shall be acceptable to the Owner in their sole discretion. Special Inspection of concrete is in addition to, but not replacing, other inspections and quality control requirements herein. Where sampling and testing required herein conforms to Special Inspection standards, such sampling and testing need not be duplicated.

All structural concrete work shall receive Special Inspection in accordance with IBC Chapter 17. Structural concrete includes all elements which resist code-defined loads and whose failure would impact life safety. Non-structural site work concrete does not require Special Inspection. Anchor bolts and anchors installed in hardened concrete require Special Inspection.

Owner provided testing shall be in accordance with Section 01910 Special Inspections.

B. QUALITY CONTROL BY CONTRACTOR:

Where required to demonstrate conformance with the specified requirements for cast-in-place concrete, the Contractor shall provide the services of an independent testing laboratory which complies with the requirements of ASTM E329. The testing laboratory shall sample and test concrete materials as specified in paragraphs 03300-2.01, 2.02, and 3.15. Costs of testing laboratory services shall be borne by the Contractor.

C. BASIS FOR QUALITY:

Cast-in-place concrete shall conform to the requirements of ACI 301, except as modified herein.

D. REFERENCES:

This section contains references to the following documents. They are a part of this section as specified and modified. Where a referenced document contains references to other standards, those documents are included as references under this section as if referenced directly. In the event of conflict between the requirements of this section and those of the listed documents, the requirements of this section shall prevail.

Unless otherwise specified, references to documents shall mean the documents in effect at the time of Advertisement for Bids or Invitation to Bid (or on the effective date of the Agreement if there were no Bids). If referenced documents have been discontinued by the issuing organization, references to those documents shall mean the replacement documents issued or otherwise identified by that organization, or if there are no replacement documents, the last version of the document before it was discontinued. Where document dates are given in the following listing, references to those documents shall mean the specific document version associated with that date, regardless of whether the document has been superseded by a version with a later date, discontinued, or replaced.

Reference	Title
ACI 117	Tolerances for Concrete Construction and Materials
ACI 211.1	Selecting Proportions for Normal, Heavy Weight and Mass Concrete
ACI 301	Structural Concrete for Buildings
ACI 305.1	Specification for Hot Weather Concreting
ACI 306.1	Standard Specification for Cold Weather Concreting
ACI 318	Building Code Requirements for Structural Concrete
ACI 350	Code Requirements for Environmental Engineering Concrete Structures
ACI 350.1	Tightness Testing of Environmental Engineering Concrete Structures
ASTM C31	Making and Curing Concrete Test Specimens in the Field
ASTM C33	Concrete Aggregates
ASTM C39	Compressive Strength of Cylindrical Concrete Specimens
ASTM C40	Organic Impurities in Fine Aggregate for Concrete
ASTM C42	Obtaining and Testing Drilled Cores and Sawed Beams of Concrete
ASTM C88	Soundness of Aggregates by Use of Sodium Sulfate or Magnesium Sulfate
ASTM C94	Ready-Mixed Concrete
ASTM C117	Materials Finer Than 75-μm (No. 200) Sieve in Mineral Aggregates by Washing
ASTM C131	Resistance to Degradation of Small-Size Coarse Aggregate by Abrasion and Impact in the Los Angeles Machine
ASTM C136	Sieve Analysis of Fine and Coarse Aggregates

Reference	Title
ASTM C142	Clay Lumps and Friable Particles in Aggregates
ASTM C143	Slump of Hydraulic Cement Concrete
ASTM C150	Portland Cement
ASTM C157	Length Change of Hardened Cement Mortar and Concrete
ASTM C172	Sampling Freshly Mixed Concrete
ASTM C192	Making and Curing Concrete Test Specimens in the Laboratory
ASTM C231	Air Content of Freshly Mixed Concrete by the Pressure Method
ASTM C260	Air-Entraining Admixtures for Concrete
ASTM C309	Liquid Membrane-Forming Compounds for Curing Concrete
ASTM C494	Chemical Admixtures for Concrete
ASTM C595	Blended Hydraulic Cements
ASTM C618	Coal Fly Ash and Raw or Calcined Natural Pozzolan for Use in Concrete
ASTM C881	Epoxy-Resin-Base Bonding Systems for Concrete
ASTM C989	Slag Cement for use in Concrete and Mortars
ASTM C1059	Latex Agents for Bonding Fresh to Hardened Concrete
ASTM C1260	Potential Alkali Reactivity of Aggregates (Mortar-Bar Method)
ASTM C1567	Potential Alkali-Silica Reactivity of Combinations of Cementitious Materials and Aggregate (Accelerated Mortar Bar Method)
ASTM C1602	Mixing Water Used in the Production of Hydraulic Cement Concrete
ASTM D75	Sampling Aggregates
ASTM D2419	Standard Test Method for Sand Equivalent Value of Soils and Fine Aggregate
ASTM E329	Agencies Engaged in Construction Inspection and/or Testing
CRD-C572	U.S. Corps of Engineer’s Specifications for Polyvinylchloride Waterstop
IBC	International Building Code with local amendments

E. CONCRETE CONFERENCE:

A meeting shall be held to review the main specification requirements and the Contractor's proposed concrete design mixes and to determine the procedures for producing proper concrete construction. The meeting shall be held no later than 28 days after the Notice to Proceed.

All parties involved in the concrete work shall attend the conference, including the following: Contractor's representative, testing laboratory representative, concrete subcontractor, concrete supplier, and the Engineer.

1.03 SUBMITTALS

The following information shall be provided in accordance with Section 01300:

1. Each proposed mix design showing (a) the expected strength at 28 days, (b) corresponding slump before and after the introduction of high-range water-reducing admixtures, (c) water/cement ratios, (d) weights and test results of the ingredients, (e) aggregate gradation, (f) test results of mix design prepared by an independent testing laboratory, and (g) other physical properties necessary to review each mix design for conformance with these specifications.

2. Product literature and technical data for color additives, aggregates, cement, and pozzolan.

3. Product literature, technical data and dosage of all proposed admixtures including, but not limited to, air entraining, water reducing and/or retarding admixtures at liquid containing concrete.

4. Anticipated average delivery time from batch plant to site. If this time exceeds the limit specified in paragraph 3.02, include proposed method to extend set time without deleterious effects on final product. Engineer reserves the right, in their sole discretion, to accept or reject such proposed methods.

5. Curing program description in sufficient detail to demonstrate acceptable strength, finish and crack control as specified.

6. Product literature and technical data for waterstops, curing and sealing compounds, bonding compounds, epoxy and chemical grout for crack injection, retardant, bearing pads and trench drains.

7. Sample panels of formed wall surfaces as specified in paragraph 3.11C and Section 03100. Samples of concrete floor and slab finishes are specified in paragraph 3.12 E.

8. Concrete delivery truck tickets showing the information listed in ASTM C94, section 14.

9. Samples of color additive manufacturer's color chart.

PART 2--PRODUCTS

2.01 MATERIALS

A. CEMENT:

Portland cement shall be ASTM C150, Type II or Type V, low alkali, containing less than 0.60 percent alkalis. In addition to standard requirements, cement shall satisfy

optional chemical and physical requirements of ASTM C150, Tables 2 and 4, respectively.

Portland-pozzolan cement shall be ASTM C595, Type IP (MS), interground, low alkali.

Use cementitious materials that are of the same brand and type and from the same plant of manufacture as the cementitious materials used in the concrete represented by the submitted field test records or used in the trial mixtures. See Section 2.01G.

B. GROUND GRANULATED BLAST-FURNACE SLAG:

Ground granulated blast-furnace slag (GGBFS), if used in conjunction with portland cement, shall be per ASTM C989.

C. AGGREGATES:

1. GENERAL: Except as modified herein, fine and coarse aggregates shall conform to ASTM C33. Fine and coarse aggregates shall be regarded as separate ingredients. Aggregates shall be non-reactive and shall be washed before use.

   Aggregates shall be checked for alkali-silica reactive constituents per ASTM C1260. Aggregate shall have less than 0.1% expansion when tested in accordance with ASTM C1260. Aggregates having 0.1% or greater expansion when tested in accordance with ASTM C1260 may still be satisfactory provided ASTM C1567 concrete mix test results are submitted and show an expansion of less than 0.1% at 16 days. ASTM C1260 and ASTM C1567 test results shall be no older than 1 year.

   Tests for size and grading of fine and coarse aggregates shall be in accordance with ASTM C136. Combined aggregates shall be well and uniformly graded from coarse to fine sizes to produce a concrete that has optimum workability and consolidation characteristics. The final combined aggregate gradation shall be established during the design mix.

   Aggregates used in the concrete shall be obtained from the same sources and have the same size ranges as the aggregates used in the concrete represented by the submitted historical data or trial mixtures. See Section 2.01G.

2. FINE AGGREGATE: Fine aggregate shall be hard, dense, durable particles of either sand or crushed stone regularly graded from coarse to fine. Gradation shall conform to ASTM C33. For classes of concrete which will be used in liquid retaining structures, fine aggregate shall not exceed 40 percent by weight of combined aggregate total, except for concrete with coarse aggregate of less than maximum size 1/2 inch.

Variations from the specified gradations in individual tests will be acceptable if the average of three consecutive tests is within the specified limits and the variation is within the permissible variation listed below:

U.S. standard sieve size	Permissible variation in individual tests, percent
30 and coarser	2
50 and finer	0.5

Other tests shall be in accordance with the following specifications:

Test	Test method	Requirements
Amount of material	ASTM C117	3 percent passing No. 200 sieve maximum by weight
Sand equivalent	ASTM D2419	Minimum 70

3. COARSE AGGREGATE: Coarse aggregate shall be hard, dense and durable gravel or crushed rock free from injurious amounts of soft and friable particles, alkali, and organic matter. Other deleterious substances shall not exceed the limits listed in ASTM C33, Table 3 for Class Designation 5S. Gradation of each coarse aggregate size specified in paragraph 03300-2.02 A shall conform to ASTM C33, Table 2.

   Variations from the specified gradations will be acceptable in individual tests if the average of three consecutive tests is within the specified limits.

D. POZZOLAN:

Pozzolan shall be Class N, natural pozzolan, or Class F fly ash conforming to ASTM C618. Class C fly ash is not allowed. Pozzolan supplied during the life of the project shall have been formed at the same single source. See Section 2.01G.

The pozzolan color shall not substantially alter the resulting concrete from the normal gray color and appearance.

Use pozzolan materials that are of the same brand and type and from the same plant of manufacture as the materials used in the concrete represented by the submitted field test records or used in the trial mixtures.

E. ADMIXTURES:

1. GENERAL: Admixtures shall be compatible with the concrete and with each other. Calcium chloride or admixtures containing calcium chloride are not acceptable. Admixtures shall be used in accordance with the manufacturer's recommendations and shall be added separately to the concrete mix. The water reducing retarders and admixtures shall reduce

the water required by at least 11 percent for a given concrete consistency and shall comply with the water/cement ratio standards of ACI 211.1. Retarder dosage shall result in set time consistent with paragraph 3.02.

2. WATER REDUCING ADMIXTURES: Water reducing admixtures shall conform to ASTM C494, Type A. Acceptable products include: BASF "Pozzolith 322N"; SIKA Chemical Corp. "Plastocrete 161"; Euclid Chemical Co. "Eucon WR91"; or equal.

3. WATER REDUCING AND RETARDING ADMIXTURES: Water reducing and retarding admixtures shall conform to ASTM C494, Type D. Acceptable products include: BASF "Pozzolith 300R"; Sika Chemical Corp. "Plastiment"; Euclid Chemical Co. "Eucon Retarder 75"; or equal.

4. HIGH RANGE WATER REDUCING ADMIXTURES: High range water reducing (superplasticizing) admixtures shall conform to ASTM C494, Type F. Acceptable products include: BASF "Glenium 3000NS"; Sika Chemical Corp. "Sikament FF or 686"; Euclid Chemical Co. "Eucon 37"; W.R. Grace "ADVA 195"; or equal.

5. HIGH RANGE WATER REDUCING AND RETARDING ADMIXTURES: High range water reducing and retarding admixtures shall conform to ASTM C494, Type G. Acceptable products include: W.R. Grace "Daracem 100"; Euclid Chemical Co. "Eucon 537"; or equal.

6. AIR ENTRAINING AGENT: Air entraining agent shall conform to ASTM C260. Acceptable products include: BASF "MB-AE 90"; Sika Chemical Corp. "AEA-15"; Euclid Chemical Co. "AEA-92"; or equal. The air entraining agent added shall produce, in accordance with ASTM C260, an entrained air content specified in paragraph 03300-2.02 A for each class of concrete.

7. COLOR ADDITIVE: Concentrated pigments specially processed for mixing into concrete and complying with ASTM C979. Color additives containing carbon black are not acceptable. Manufactured by Davis Colors or Equal.

F. WATER:

Water for washing aggregate, for mixing and for curing shall be free from oil and deleterious amounts of acids, alkalis, and organic materials; and shall comply with the requirements of ASTM C1602. Additionally, water used for curing shall not contain an amount of impurities sufficient to discolor the concrete.

G. CHANGE OF MATERIALS:

After each concrete mix design is approved by the Engineer, no changes of any sort or source will be allowed without prior written approval from the Engineer. When brand, type, size, or source of cementitious materials, aggregates, water, ice, or admixtures are proposed to be changed, new field data, data from new trial

mixtures, or evidence that indicates that the change will not affect adversely the relevant properties of the concrete shall be submitted for approval by the Engineer before use in concrete.

2.02 CONCRETE CHARACTERISTICS

A. MIX PROPORTIONING:

Concrete shall be normal weight concrete composed of specified cement, pozzolan, admixtures, aggregates and water proportioned and mixed to produce a workable, strong, dense, and impermeable concrete. The Contractor may substitute interground Portland-pozzolan cement conforming to ASTM C595, containing the specified amount of pozzolan in lieu of Portland cement and pozzolan. Water-cementitious material (w/cm) ratio is based on the combined contents of cement and pozzolan in a given mix proportion.

Concrete shall be provided in accordance with the following:

Concrete class	ASTM coarse aggregate size	Maximum water-cementitious materials (w/cm) ratio	Minimum Cementitious Materials Content (pounds/CY)	Pozzolan, percent by weight of cementitious materials	Air content (percent)	Minimum[a] 28-day compressive strength, psi	Slump Range[b] (inches)
B	57 or 67	0.45	560	15-20[d]	4-6	3000	3-5
C	57 or 67	0.40	560	15-20	4-6	5000	3-5
E[c]	57	--	-	15-20[d]	Not Required	2000	4-8

[a] Compressive strength shall be determined at the end of 28 days based on test cylinders made and tested in accordance with ASTM C39.

[b] Slump before addition of high range water reducing admixture (superplasticizer). Maximum slump after addition of high range water reducing admixture shall be 8”.

[c] Concrete encasement for electrical conduit shall contain 3 pounds of red oxide per sack of cement.

[d] Pozzolan use optional for this class of concrete.

[e] Minimum 28-day compressive strength shall be 500 psi and maximum 28-day compressive strength shall be 1,000 psi.

B. USE:

Concrete shall be provided by class for the corresponding use listed as follows:

Type of use	Class of concrete
Non-structural concrete (sidewalks, curbs, pavers, etc.)	B
Typical cast-in-place structural concrete	C
Pipe bedding and encasement, electrical conduit encasement (duct banks) and concrete fill	E

C. CONTROL TESTS:

1. GENERAL: Before beginning concrete work, the Contractor shall determine the proper proportions of materials for each class of concrete. The mix shall consist of specified cement, pozzolan, admixtures, aggregate and water. Methods for selecting and adjusting proportions of the ingredients shall be in accordance with ACI 211.1. Verification of mix characteristics for submittal may be achieved using either the Trial Mix Design method or Field Experience method. Concrete shall not be placed in the field prior to review and acceptance of mix proposed.

2. TRIAL MIX DESIGN: Each class of concrete and/or mix verified by this method shall be manufactured at the batch plant which will supply concrete to the project using materials proposed for the Work and material combinations listed in paragraphs 2.01 and 202. Testing, data and reporting shall conform to ACI 318 Section 5.3 and the following:

   (a) Required compressive strength used as the basis for selecting concrete proportions (f'cr) shall be the specified concrete strength (f'c) + 1000 psi for specified concrete strengths less than 3,000 psi and f'c + 1200 psi for specified concrete strengths between 3000 psi and 5000 psi.

   (b) Make at least three trial different mixtures for each class of concrete qualified by the Trial Mix Design. Each trial mixture shall have a different w/cm ratio or different cementitious materials content that will produce a range of compressive strengths encompassing f'cr.

   (c) Trial mixtures shall be designed to produce a slump within ¾ in. of the maximum specified and for air-entrained concrete, an air content within 0.5% of the maximum allowable air content.

   (d) For each w/cm ratio or cementitious materials content, at least twelve standard test cylinders shall be cast and cured in accordance with ASTM C192. Four cylinders from each batch shall be tested at age 7 days, 14 days, and 28 days or as required to comply with ACI

318 Section 5.3.

(e) From results of the cylinder tests, plot a curve showing the relationship between w/cm ratio and compressive strength.

(f) From the curve of w/cm ratio versus compressive strength, select the w/cm ratio that will produce f'cr. This is the maximum w/cm ratio that shall be used unless a lower w/cm ratio is specified in paragraph 2.02A.

3. FIELD EXPERIENCE DATA: When sufficient test data for a particular mix design is available which is identical or substantially similar to that proposed for use, Contractor may substitute use of this data in lieu of a trial mix design. Field data, reports, and analysis shall conform to ACI 318 Section 5.3, except as modified herein. Historical mix design proportions for which data are submitted may vary from the specified mix within the following limits: (a) f'c as specified or up to 500 psi above; (b) w/cm ratio as specified or lower; (c) pozzolan content within 5 percent of that specified; (d) maximum coarse aggregate size may not vary smaller, but gradation of coarse aggregate may vary; (e) fine aggregate fraction within +0/ 5 percent of that specified; and (f) slump after introduction of admixtures +0/-1 inch. Use of historical mix design data does not allow modification of the project mix specifications herein without the express review and acceptance of the Engineer.

2.03 WATERSTOPS

A. POLYVINYL CHLORIDE (PVC):

PVC waterstops shall be manufactured from virgin polyvinyl chloride conforming to the Corps of Engineers Specification No. CRD-C572. Unless otherwise specified or noted on the drawings, waterstops in construction joints shall be 6-inch flat center/ribbed sides/0.375 inch thick. Acceptable products include: Greenstreak Group, Inc. "Model 679"; Vinylex Waterstops and Accessories "Model R638"; or equal. Waterstops in expansion joints shall be 9 inch center-bulb/ribbed sides/0.375 inch thick. Acceptable products include: Greenstreak Group, Inc. "Model 696"; Vinylex Waterstops and Accessories Model "RLB938"; or equal.

Crosses, tees, and other shapes used for changes of direction, intersections, and transitions shall be molded pieces as recommended by the manufacturer.

B. EXPANDING (HYDROPHILIC) WATERSTOPS:

Expanding waterstops shall be bentonite-free and made from unvulcanized rubber. Acceptable products include: SIKA "SikaSwell P-2010"; Adeka Corporation "Ultra Seal MC-2010MN"; Greenstreak Group, Inc. "Hydrotite CJ-1020-2K"; or equal. These are allowable for use only where indicated on the drawings or accepted in writing by the Engineer. Provide adhesive approved by the waterstop manufacturer where required due to geometry, irregular surface conditions, or as recommended by the manufacturer. The waterstop MUST be placed between two mats or curtains

of steel reinforcement. For limited cover applications or where only one mat or curtain of reinforcement is present, use Adeka Corporation “Ultra Seal KBA-1510FP”.

2.04 SEALANTS AND JOINT FILLERS

Sealants and preformed joint fillers shall be as specified in Sections 07900 and 07905.

2.05 BONDING COMPOUNDS

Epoxy resin bonding compounds to be used for wet areas shall conform to ASTM C881 Types IV or V, Class A, B, or C depending on temperature at use, and Grade to suit geometry and installation circumstances. Acceptable products include: BASF “Concresive Paste SPL” or “Concresive 1490”, as applicable; Sika Chemical Corporation “Sikadur 35” or Sikadur 32”, as applicable; or equal.

Non-epoxy bonding compounds may be used in dry areas for non-structural bonding or as specifically noted on the drawings only and shall conform to ASTM C1059 Type II. Acceptable products include: Edoco “Burke Acrylic Bondcrete”; ChemMasters “Cretelox”; or equal.

Bonding compounds shall be applied in accordance with the manufacturer’s instructions.

2.06 EPOXY FOR CRACK INJECTION

Epoxy for crack injection shall be a two-component, moisture insensitive, high modulus, injection grade, 100 percent solids, blend of epoxy-resin compounds. The consistency shall be as required to achieve complete penetration in hairline cracks and larger. Material shall conform to ASTM C881 Type 1 Grade 1. Acceptable products include Sika Corporation “Sikadur 52”; Adhesives Technology Corporation “Crackbond SLV302”; or equal. Epoxy grout shall be used for all crack repairs except as noted below for non-structural cracks in liquid-containing concrete. The Engineer shall determine whether a crack is classified as structural or non-structural. Structural cracks must be repaired with epoxy.

2.07 CHEMICAL GROUT FOR CRACK INJECTION

Chemical (hydrophobic polyurethane) grout shall be used at the Engineer's discretion as an alternative to the injection of the epoxy grout for sealing non-structural cracks in structures intended to be watertight. Acceptable products include "Hydro Active Cut" by De Neef Construction Chemicals or SikaFix HH by Sika Corporation, or equal approved by the Engineer.

2.08 RETARDANT

Retardant for exposing aggregates for unformed surfaces in construction joints shall be Sika “Rugasol-S”; W.R. Grace “Top-Cast”; or equal. Retardant shall be applied in accordance with manufacturer’s instructions sufficient to assure a minimum penetration of 1/4 inch.

2.09 CURING AND SEALING COMPOUNDS

Curing and sealing compound shall be BASF Sonneborn “Kure-N-Seal 25LV”; Edoco, “Spartan-Cote VOC”; or equal, conforming to ASTM C309.

Curing compound shall be clear and shall be applied in accordance with the manufacturer’s instructions, except as otherwise specified. Curing and sealing compound shall be certified compliant with final finish systems.

2.10 COLOR ADDITIVE

Provide colors to be selected by Engineer.

PART 3--EXECUTION

3.01 GENERAL

This section covers the production of cast-in-place concrete. Included are methods and procedures for obtaining quality concrete through proper handling, placing, finishing, curing, and repair of surface defects.

3.02 CONCRETE

Concrete shall be truck-mixed, ready-mixed concrete conforming to the applicable portions of ASTM C94. Materials shall be proportioned by weighing. Pozzolan shall be introduced into the mixer with cement and other components of the concrete mix; pozzolan shall not be introduced into a wet mixer ahead of other materials or with mixing water. Water shall be introduced at the time of charging the mixer; additional water may be introduced within 45 minutes from charging the mixer, provided the specified slump is not exceeded and the maximum total water per the approved mix design is not exceeded. Contractor shall arrange with the testing laboratory for inspection as required to comply with these specifications.

Concrete shall be delivered to the site and discharge shall be completed within 90 minutes after introduction of water to the mixture. Extension of allowable time beyond this limit requires a Contractor proposed remedial action plan to be reviewed and accepted by the Engineer.

3.03 CONVEYING AND PLACING CONCRETE

A. CONVEYING CONCRETE:

Concrete shall be conveyed from the mixer to the forms in accordance with ACI 301. Concrete which has segregated in conveying shall be removed from the site of the work.

B. PLACING CONCRETE:

1. GENERAL: Concrete shall be placed in accordance with ACI 301. Do not permit concrete to drop freely more than 4-ft.

2. PLACING CONCRETE BY PUMPING: Concrete may be placed by pumping at Contractor's discretion. Use of pumping shall not, however, because to change or relax specified mix design characteristics. Concrete shall possess the specified characteristics at the point of placement.

   Slump shall be measured at the hose discharge, except as follows. Initial slump testing in each pour shall occur at both the pumping unit inlet hopper and hose discharge. Slump loss in pumping, measured between the inlet hopper and the hose discharge, shall not exceed 1 inch. After these criteria have been satisfied, slump may be measured at the inlet hopper with allowable slump increased by the earlier measured difference, not to exceed 1 inch.

   Air content shall be measured at the hose discharge, except as follows. Initial air content testing shall occur at both the pumping unit inlet hopper and the hose discharge. Loss of air content shall be measured between the inlet hopper and the hose discharge. The air content of the delivered concrete at the inlet hopper shall be increased to provide the specified air content at the hose discharge. After these criteria have been satisfied, air content may be measured at the inlet hopper.

   Before starting each pumping operation, the pump and line shall be primed with a cement slurry to lubricate the system. Cement slurry shall be wasted outside the forms. Hose tip shall be equipped with a safety chain for recovery in case of hose blowout during pumping, and in no case shall hose or accessories remain in the freshly placed concrete.

   Proper tremie placing techniques and equipment shall be used for all pump placed concrete. Pump discharge system shall remain full of concrete from pump to discharge point at all times. Concrete pumping shall not occur until Engineer has verified that the proper equipment is available, in particular, the tremie plug. Should the discharge line become open, with significant zones empty of concrete, then the pumping shall cease and the line re-primed with tremie plug installed before continuing the pour.

3. PLACING CONCRETE IN HOT WEATHER: In hot weather (above 80 degrees F), concrete shall be placed in accordance with ACI 305.1.

4. PLACING CONCRETE IN COLD WEATHER: In cold weather (below 45 degrees F), concrete shall be placed in accordance with ACI 306.1.

C. CONSOLIDATING CONCRETE:

Concrete shall be consolidated in accordance with ACI 301. If proper consolidation is not occurring, then concrete placing shall be suspended until proper consolidation can be achieved.

3.04 CURING AND SEALING

A. GENERAL:

Concrete curing shall be completed by water curing or by using a clear membrane curing compound or by a combination of both methods. Repairs or treatment of concrete surfaces shall be coordinated so that interruption of the curing will not be necessary.

Concrete surface temperature shall be maintained between 50 degrees F and 80 degrees F for at least 5 days. Curing concrete in hot weather (above 80 degrees F) shall be in accordance with ACI 305.1. Curing concrete in cold weather (below 45 degrees F) shall be in accordance with ACI 306.1.

B. WATER CURING:

When water curing is used, concrete shall be kept wet continuously for a minimum of 10 days after placement. Absorptive mats or fabric may be used to retain moisture during the curing period.

Unless otherwise specified, water curing shall be used in hot weather for water containment structures. Forms shall be covered and kept moist. The forms shall be loosened as soon as possible without damage to the concrete, and provisions made for curing water to run down inside them. During form removal, care shall be taken to provide wet cover to newly exposed surfaces.

C. CURING COMPOUND:

When curing compound is used, it shall be applied as soon as the concrete has set sufficiently so as not to be marred by the application or immediately following form removal for vertical and other formed surfaces. Preparation of surfaces, application procedures, and installation precautions shall be followed in strict compliance with the manufacturer's instructions. Curing compound shall be applied at twice the manufacturer's recommended dosage rate in two coats applied perpendicular to each other. Use of curing compound for other than liquid containing structures shall be in accordance with the manufacturer's recommendations.

Curing compound shall not be used on concrete surfaces to be coated, waterproofed, moisture-proofed, tiled, roofed, or where other coverings are to be bonded, unless the curing compound is compatible with the final finish covering or it is removed prior to covering.

3.05 PROTECTION

Concrete shall be protected from injurious action by sun, rain, flowing water, frost and mechanical injury.

Loading green concrete will not be permitted. Green concrete is defined as concrete with less than 100 percent of the specified strength.

Unless otherwise shown on the Drawings, no backfill shall be placed against concrete walls until the concrete has reached the specified strength and the connecting slabs and beams have been cast and have reached the specified strength.

Arrangements for covering, insulating, and protecting concrete in cold weather shall be in accordance with ACI 306.1.

3.06 CONSTRUCTION JOINTS

A. GENERAL:

Concrete in each unit of construction shall be placed continuously. Before new concrete is placed on or against concrete which has set, forms shall be retightened and the surface of the set concrete shall be cleaned of foreign matter. Watertight joints shall be provided as specified in paragraph 03300-3.09.

B. CONSTRUCTION:

Construction joints shall be formed as specified. A rough surface of exposed concrete aggregates shall be produced using a surface retardant at construction joints, including joints between the slab and topping concrete. The limit of the treated surfaces shall be 1 inch away from the joint edges. Within 24 hours after placing, retarded surface mortar shall be removed either by high pressure water jetting or stiff brushing or combination of both so as to expose coarse aggregates. A rough surface of exposed aggregate may also be produced by sandblasting followed by high pressure water jetting. Sandblasting, if used, shall remove 1/4 inch of laitance film and shall expose coarse aggregate to ensure adequate bond and watertightness at the construction joints.

C. LOCATIONS:

Construction joint locations shall be as follows:

1. Walls exceeding 50 feet in length shall be cast in panels not to exceed 30 feet in length. Where the number of panels is three or more, the panels shall be cast in an alternating pattern, unless 5 days have elapsed between casting of adjoining panels. Joints are not allowed within the lesser of 10 feet or 25 percent of the wall length from any corner unless specifically detailed thus on the drawings.

2. Joints in beams or girders shall be located at or near the midpoint between supports.

3. Joints in the members of a floor system shall be made at or near the center of the span.

4. Joints in walls and columns shall be at the underside of floors, slabs, beams or girders and at the tops of footings or floor slabs. Joints in columns shall be perpendicular to the axis.

5. Slabs panels shall be cast in checkerboard patterns not to exceed 40 feet in length and not to exceed 900 square feet in area, with maximum 1 ½ to 1 ratio of side lengths. Minimum lapsed time between placing adjacent panels shall be 72 hours. The requirements for size of slab panel may be waived if joints are specifically located on the Drawings.

Vertical construction joints shall be grooved at faces exposed to view including interior faces of basins and tanks. Grooves subjected to wetting or weather shall be caulked with joint sealer as specified.

Reinforcing steel and welded wire fabric shall be continued across construction joints. Girders and floor slabs shall not be constructed over columns or walls until at least one hour has elapsed to allow for shrinkage in the column or wall. No joint will be allowed between a slab and a beam or girder unless otherwise specified. Joints shall be perpendicular to the main reinforcement. Waterstops shall be provided in construction joints at locations as specified in paragraph 03300-3.09.

3.07 INSERTS AND EMBEDMENTS

A. INSERTS:

Where pipes, castings or conduits are to pass through structures, the Contractor shall place such pipes or castings in the forms before placing the concrete, or he may provide openings in the concrete for subsequent insertion of such pipes, castings or conduits. Such openings shall be provided with waterstops and V-shaped construction joint as shown and shall have a slight flare to facilitate grouting and permit the escape of entrained air during grouting.

Additional reinforcement shall be provided around openings as shown. Grout fill around inserts shall be non-shrink grout as specified in Section 03600.

Horizontal conduits and pipes, where shown in structural slabs and beams, shall be placed between the top and bottom layers of reinforcement. Spacing and size limitations shall conform to ACI 318 Section 6.3 unless specifically approved otherwise by the Engineer. Such conduits and pipes shall not run directly beneath a column or, if used, its steel base plate. Pipe, conduit, dowels, and other ferrous items required to be embedded in concrete construction shall be so positioned and supported prior to placement of concrete that there will be a minimum of 2-inches clearance between said items and any part of the concrete reinforcement. The outside diameter of such conduits should not exceed one-fourth the slab or beam thickness. Securing such items in position by welding them to the reinforcement will not be permitted.

B. EMBEDMENTS:

Gate frames, gate thimbles, special castings, channels or other miscellaneous metal parts that are to be embedded in the concrete shall be set and secured in the forms prior to concrete placement. Unless otherwise specified, anchor bolts and inserts shall be embedded in concrete as shown. The Contractor shall provide inserts, anchors or other bolts necessary for the attachment of piping, valves, metal parts and equipment. Nailing blocks, plugs, strips, and the like necessary for the attachment of trim, finish, and similar work shall be provided. Voids in sleeves, inserts and anchor slots shall be filled temporarily with readily removable material to prevent the entry of concrete into the voids. Operators or sleeves for gate or valve stems shall be positioned to clear reinforcing steel, conduit and other embedments, and to align accurately with equipment.

3.08 EXPANSION JOINTS

Expansion joints shall be as shown. Reinforcement or other embedded metal items bonded to the concrete shall not extend through expansion joints. Waterstops shall be provided in expansion joints as specified in paragraph 03300-3.09.

3.09 WATERSTOPS

Waterstops shall conform to ACI 301. Waterstops shall be securely held in position during placing of concrete. If, after placing concrete, waterstops are materially out of position or shape, the surrounding concrete shall be removed, the waterstop reset, and concrete replaced in accordance with paragraph 03300-3.10.

Waterstops shall be provided at the following joints:

1. Expansion joints in structures.

2. Joints in parts of structures exposed to ground or water on one side and occupied by non-submerged equipment or by personnel on the other.

3. Wall and slab joints of tanks and channels subject to water pressure. Waterstops shall be provided for the full height of the wall, or as otherwise noted on the drawings.

Field splices shall be heat fused welded butt splices only and shall be acceptable only in straight sections. Lapping of splices or joining by any means other than heat fused welding shall not be allowed.

Hydrophilic waterstops shall be installed according to manufacturer's recommendations. Surfaces of concrete shall be prepared to required level/plumb and smoothness as required by manufacturer. Form and finish concrete placed first with contact surface requirements in mind, or grind surface if necessary. Provide bonding adhesive if required for the particular product, or if surface conditions warrant. Note restrictions on use described in paragraph 03300-2.03 B.

3.10 MODIFICATION OF EXISTING CONCRETE

A. GENERAL:

Structural dimensions related to or controlled by previously constructed or existing structures shall be verified in the field by the Contractor prior to concrete work.

B. CUTTING OR CORING CONCRETE:

Surfaces exposed to view shall be neatly saw cut to a depth of 1 inch prior to removing the existing concrete. Where existing reinforcement is exposed due to saw cutting or core drilling and no new material is to be placed on the sawcut surface, a coating or surface treatment of epoxy shall be applied to the entire cut surface. Areas that require an oversize opening shall be as shown on the Drawings. The exposed surface of the oversized opening shall be coated with an epoxy bonding compound and re-finished with profiling mortar to the required opening size.

Existing joint edge shall be ground to create a chamfer matching those used adjacent, where occurs. Grind existing to imitate tooled edge.

Unless specifically notified otherwise, Contractor shall investigate concrete to be drilled, cored or sawcut to determine location of existing reinforcing steel. Penetrations shall be located so as to clear existing reinforcing steel if possible. Unless otherwise detailed on the drawings, or where not possible to avoid reinforcing steel, consult the Engineer as to acceptability of cutting reinforcing steel and provide new reinforcing systems as directed. Locating methods include chipping to expose reinforcing steel, ground penetrating radar, X-ray, or magnetic flux devices. Locates of existing reinforcing shall be paid for by the Contractor.

C. JOINING NEW CONCRETE TO EXISTING:

Existing concrete surfaces to be joined with new concrete shall be thoroughly cleaned and roughened by abrasive blasting, bush hammering or other method to achieve ¼-inch amplitude surface. Existing metalwork, embeds or other interfering items shall be removed. Coat existing surface with epoxy bonding compound just prior to placement of new concrete.

D. DOWELS:

Dowels to be installed in existing concrete shall utilize holes drilled with a hammer drill and carbide bit (core drilled holes not allowed), properly brushed and air-cleaned with oil-free compressed air, and an injectable two-component epoxy adhesive, as per Section 03600. Installation shall conform to manufacturer's recommendations and to ICC Evaluation Reports.

E. DRILLING HOLES IN EXISTING CONCRETE FOR POST-INSTALLED ANCHORS

Non-destructive methods shall be used for locating reinforcement prior to drilling operations. For anchor locations that interfere with reinforcement, the Contractor shall first attempt to relocate anchors to avoid drilling through the reinforcement.

For situations that do not allow relocation of the anchor, cutting of reinforcement for anchor installation subject to the following will be acceptable:

1. Prior to drilling through reinforcement, the Contractor shall have an experienced individual evaluate the condition. For situations that appear questionable, the Engineer shall be consulted.

2. Holes drilled through reinforcement must be in compliance with adhesive anchor assumptions for roughened hole surface typical of a hammer drill and carbide bit. Not smooth hole surfaces are allowed.

3. No slab rebar shall be cut within 24-inches of the supporting wall, column or an opening in the slab.

4. No cutting of rebar is allowed in the middle third of slab spans for anchors with diameters equal to or greater than 3/4".

5. Maximum of two rebar may be cut in any 10-foot width of slab.

6. Maximum of two rebar may be cut within any 10-foot width of concrete wall.

7. Maximum of one rebar may be cut within any 8-foot width of CMU wall.

8. No wall or slab rebar shall be cut within 24-inches of an opening.

For anchors that cannot be moved and that conflict with the above requirements, the Engineer shall be consulted for direction. Under no circumstances will it be acceptable to cut through reinforcement in beams, columns, precast members, and stairs.

F. WATERSTOPS:

Where a waterstop between new and existing concrete is required, Contractor shall install a hydrophilic waterstop unless otherwise noted on the Drawings.

3.11 FORMED SURFACE FINISHES

A. REPAIR OF SURFACE DEFECTS:

Surface defects, including tie holes, minor honeycombing or otherwise defective concrete shall be repaired in accordance with ACI 301. Areas to be patched shall be cleaned. Minor honeycombed or otherwise defective areas shall be cut out to solid concrete to a depth of at least 1 inch. The edges of the cut shall be perpendicular to the surface of the concrete. Patches on exposed surfaces shall be

finished to match the adjoining surfaces after they have set. Patches shall be cured as specified for the concrete. Finished surfaces shall be protected from stains and abrasions. Finishes shall be equal in workmanship, texture, and general appearance to that of the adjacent concrete. Concrete with honeycombing which exposes the reinforcing steel or with defects which affect structural strength shall be corrected.

B. FORMED SURFACE FINISHING:

Formed surfaces shall be finished as soon as practicable after form removal and repair of surface defects. Finishes shall be as follows.

1. FINISH A: Finish A shall be a grout-cleaned rubbed finish in accordance with ACI 301 except that ALL FORM FINS AND OTHER PROTRUSIONS SHALL BE COMPLETELY REMOVED TO THE FINAL SURFACE. Surfaces shall be lightly sandblasted prior to sacking. Sandblasting shall occur after the specified curing period. For interior areas not exposed to moisture or weather, water used in the sacking mortar shall be mixed with a PVA bonding compound as recommended by the manufacturer. Finish A shall be provided for uncoated surfaces at surfaces of stair wells; interior surfaces of equipment rooms, galleries and tunnels; operations areas; exposed channels and tanks from 1 foot below minimum water surfaces and up; and permanently exposed vertical and sloped surfaces, such as pipe chases. Finish A shall not be provided at concrete surfaces receiving a coating.

2. FINISH B: Finish B shall be a smooth surface with all form fins and other protrusions completely removed to the final surface. Finish B shall be provided for coated surfaces. See specification 09900 for concrete surface coatings and surface preparation, including filling bug holes before coating.

3. FINISH C: Finish C shall be a finish which has surface imperfections less than 3/8 inch in any dimension. Surface imperfections greater than 3/8 inch shall be repaired or removed and the affected areas shall be neatly patched. Finish C or smoother shall be provided for interior surfaces of wet wells, tanks and channels from 1 foot below minimum water surfaces and down and otherwise unfinished interior surfaces.

4. FINISH D: Finish D shall be the finish for surfaces which may be left as they come from the forms, except that tie holes shall be plugged and defects greater than 1/2 inch in any dimension shall be repaired.

C. SAMPLES OF FORMED SURFACE FINISH:

A sample concrete panel, 2 feet by 2 feet, representative of formed surface Finish A shall be provided to the Engineer. The panel shall be representative of the workmanship and finish required, including filling of tie holes. The sample shall be deemed acceptable by the Engineer prior to the start of such work. The sample shall be on display at the job site, and finished surfaces shall match sample.

3.12 SLAB FINISHES

A. GENERAL:

The finishes specified herein include surface finishes, treatments and toppings for floors and slabs. Dry cement shall not be used on new concrete surfaces to absorb excess moisture. Edges shall be rounded to a radius of 1/2 inch. Joints shall be grooved to a radius and depth of 1/4 inch each. Finishes shall match the sample panels provided under paragraph 03300-3.12E.

Floors shall be sloped to drain uniformly within a room or space. Unless otherwise specified, slope shall be a minimum of 1/8 inch per foot toward nearest drain. Where finish is not specified, floor slabs shall receive steel troweling. Use of floor drains with only locally depressed slabs shall be coordinated with Engineer if detailed on the drawings, and restricted to locations specifically noted.

B. FLOAT FINISH:

Floating shall be performed with a hand or power-driven float in accordance with ACI 301. Begin floating when the bleed water sheen has disappeared and the surface has stiffened sufficiently to permit operation of the specific float apparatus. Floating of any one area shall be the minimum necessary to produce a finish that will meet tolerance requirements of ACI 117 for a conventional surface. Refloat the slab immediately to a uniform texture. Floating shall compact and smooth the surface and close any cracks and checking of surfaces. Float finish shall be applied to surfaces of channel, tank bottom slabs, tops of footings, and steps and surfaces to receive roofing and insulation.

C. STEEL TROWEL FINISH:

Float the concrete surface and then trowel in accordance with ACI 301. Immediately after final troweling, the surface shall be cured and protected as specified in paragraphs 03300-3.04 and 03300-3.05. Steel trowel finish shall be provided on floors unless specified otherwise.

D. BROOMED FINISH:

Immediately after concrete has received a floated finish, give the concrete surface a coarse transverse scored texture by drawing a broom or burlap belt across the surface in accordance with ACI 301. Broomed finish shall be provided for walks, tops of tanks, slabs-on-grade exposed to atmosphere, and where otherwise indicated or specified.

3.13 RELATED SURFACES

A. STAIR TREAD:

Stair tread shall be constructed with nonskid nosing as specified in Section 05530. Tread shall have a steel trowel finish and shall have a slope of 1/8 inch per foot

toward the front. Ends of treads shall have a 1/16 to 1/8 inch cut between concrete and metal tread to allow for expansion.

B. FINISHING OF UNFORMED SURFACES:

1. RELATED UNFORMED SURFACES: Tops of walls or buttresses, horizontal offsets, and similar unformed surfaces occurring adjacent to formed surfaces shall be struck smooth after concrete is placed and shall be floated to a texture reasonably consistent with that of the adjacent formed surfaces. Final treatment of formed surfaces shall continue uniformly across the unformed surfaces.

2. PAVEMENTS AND SIDEWALKS: The surfaces of the concrete shall be screeded to grade and sloped to drain. After screeding, the surface shall receive a broomed finish as specified in paragraph 03300-3.12 D. Edges and expansion joints shall be rounded to a radius of ½ inch. Joints shall be grooved to a radius and depth of 1/4 inch each.

3.14 FIELD SAMPLING AND TESTS

A. GENERAL:

Field sampling and testing shall be performed by the independent testing laboratory. Samples of aggregates and concrete shall be taken at such times to represent the quality of the materials and work throughout the project. The laboratory shall provide the necessary labor, materials and facilities for sampling the aggregate and for casting, handling and initially storing the concrete samples at the site of work. Aggregates shall be sampled in accordance with paragraph 03300-3.15 B not less than 30 days prior to the use of such aggregates in the work. The minimum number of samples and tests are specified in paragraph 03300-3.15 C.

B. SAMPLING:

1. AGGREGATES:

a. GENERAL: Fine and coarse aggregates shall be sampled in accordance with ASTM D75. Samples shall be taken at the discharge gates of the bins feeding the weigh hopper. The Contractor shall provide safe and suitable facilities for obtaining samples. Samples shall be obtained at the concrete batch plant at the frequency specified in paragraph 03300-3.15 C. Sampling shall be repeated when the source of material is changed or when unacceptable deficiencies or variations from the specified requirements of materials are found in testing. Aggregate samples shall be tagged and their sources identified.

b. COARSE AGGREGATE: A sample weighing between 50 and 60 pounds shall be taken after the batch plant is brought up to full operation. The samples shall be taken so that a uniform cross

section, accurately representing the materials on the belt or in the bins, is obtained.

c. FINE AGGREGATE: Samples shall be taken as specified for coarse aggregate. The samples shall be taken for sieve analysis of fine aggregate and specific gravity tests. Samples of sand shall be taken when the sand is moist.

2. CONCRETE: Samples of plastic concrete shall be obtained in accordance with ASTM C172. Samples shall be taken at the hopper of concreting equipment or transit mix truck, except as noted in 03300-3.03B.2

C. TESTING:

1. AGGREGATE: A minimum of one test of coarse aggregate per 400 cubic yards of concrete and a minimum of one test of fine aggregate per 200 cubic yards of concrete used shall be made to confirm continuing conformance with specifications for gradation, cleanliness and sand equivalent. A maximum of one test per day of each aggregate is required. The full test program is required before source changes will be accepted.

2. CONCRETE:

a. STRENGTH TESTS: The strengths specified for the design mix shall be verified by the independent testing laboratory during placement of the concrete. Verification shall be accomplished by testing standard cylinders of concrete samples taken at the job site. Cylinders shall be 4 by 8 inch or 6 x 12 inch.

Standard cylinders shall represent the concrete placed in the forms. One set of six standard 6 x 12 inch (or nine 4 x 8 inch) cylinders shall be cast of each class of concrete for each 100 cubic yards or less or for each 5,000 square feet of surface area placed per day. Casting, handling and curing of cylinders shall be in accordance with ASTM C31. Additional cylinders shall be provided when an error in batching is suspected. For the first 24 hours after casting, the cylinders shall be kept moist in a storage box constructed and located so that its interior air temperature will be between 60 and 80 degrees F. At the end of 24 hours, the cylinders shall be transported to the testing laboratory.

Testing of specimens for compressive strength shall be in accordance with ASTM C39. Tests shall be made at 7 and 28 days from time of casting. Two 6 x 12 inch (or three 4 x 8 inch) test cylinders from each group of six (or nine) shall be tested at the end of 7 days and two 6 x 12 inch (or three 4 x 8 inch) shall be tested at the end of 28 days. The two remaining 6 x 12 inch (or three 4 x 8 inch) cylinders shall be tested at the end of 56 days if the 28-day strength reports below specification. A strength test shall consist of the average strength of two 6 x 12 inch (or three 4 x 8) cylinders cast

from material taken from a single load of concrete. If one cylinder shows evidence of low strength due to improper sampling, casting, handling or curing, the result of the remaining cylinders may be used if approved by the Engineer.

The average of any three consecutive 28-day strength test results of the cylinders representing each class of concrete for each structure shall be equal to or greater than the specified strength and not more than 10 percent of the strength test results shall have values less than the specified 28-day strength for the total job concrete. No individual strength test result shall be less than the specified strength by more than 500 pounds per square inch.

Certified reports of the test results shall be provided directly to the Engineer. Test reports shall include sufficient information to identify the mix used, the stationing or location of the concrete placement, and the quantity placed. Slump, air content, temperature of concrete, and ambient temperature shall be noted. The 28-day strength test results shall be evaluated in accordance with ACI 214R. Quality control charts showing field test results shall be included with the test results for each class of concrete in each major structure. Charts shall be prepared in accordance with ACI 214R. Quality control charts shall be maintained throughout the entire job and shall be available for the Engineer's inspection at any time.

If the 28-day test results fall below the specified compressive strength for the class of concrete required for any portion of the work, adjustment in the proportions, water content, or both, shall be made as necessary at the Contractor's expense. Changes and adjustments shall be reported in writing to the Engineer.

If compressive test results indicate concrete in place may not meet structural requirements, tests shall be made to determine if the structure or portion thereof is structurally sound. Tests may include, but not be limited to, cores in accordance with ASTM C42 and any other analyses or load tests acceptable to the Engineer. Costs of such tests shall be borne by the Contractor.

b. TESTS FOR CONSISTENCY OF CONCRETE. The slump shall be as specified when measured in accordance with ASTM C143. Samples for slump determination shall be taken from the concrete during placement. Tests shall be made at the beginning of concrete placement operation and at subsequent intervals to ensure that the specification requirements are met. Slump tests shall also be performed whenever standard cylinders are cast. For pumped concrete, slump shall be measured in accordance with paragraph 3.03B.2.

When high range water reducers are added at the site, slump tests shall be taken before and after addition of high range water reducing admixtures.

c. TESTS FOR TEMPERATURE AND AIR CONTENT: Temperature tests shall be made at frequent intervals during hot or cold weather conditions until satisfactory temperature control is established. Whenever standard cylinders are cast, temperature tests shall be performed.

Air content shall be as specified when measured in accordance with ASTM C231. Air content shall be measured whenever standard cylinders are cast. For pumped concrete, air content shall be measured in accordance with paragraph 3.03B.2.

D. FINAL LABORATORY REPORT:

A final report, prepared by the testing laboratory, shall be provided at the completion of all concreting. This report shall summarize the findings concerning concrete used in the project and provide totals of concrete used by class and structure. Final quality control charts for compressive strength tests for classes of concrete specified in each major structure shall be included. The report shall also include the concrete batch plant's coefficient of variation and standard deviation results for each class of concrete.

3.15 REPAIR OF DAMAGED CONCRETE, CRACKING:

A. ACCEPTANCE OF CONCRETE:

Completed cast-in-place concrete work shall conform to the applicable requirements of ACI 301 and the Contract Documents. Concrete work that fails to meet the requirements of ACI 301 or the Contract Documents shall be repaired as approved by the Engineer to bring the concrete into compliance. Concrete that cannot be brought into compliance by approved repair methods will be rejected. Rejected concrete work shall be removed and replaced. Repair methods shall be in accordance with ACI standards and are subject to the approval of the Engineer. The cost of repairs and replacement of defective concrete shall be borne by the Contractor.

B. REPAIR METHODS:

Damaged or excessively cracked concrete, as determined by the Engineer in their sole discretion, shall be repaired by one of the following methods as approved by the Engineer:

1. Repair Method 1: Fill the joint or crack by drilling holes to the affected area, install injection ports and force epoxy or chemical grout (expanding urethane) into the joint under pressure. The material type, whether epoxy or chemical grout shall be approved by the Engineer. After injection and curing, ports, sealing mix and surface generally shall be cleaned and

worked to match the specified finish.

2. Repair Method 2: Fill cracks with low viscosity epoxy, applied by pouring/flooding crack zone until cracks are filled. Prepare surface, install, and cure according to manufacturer's recommendations. At a minimum, prepare surface to result in a clean, dry surface and with no visible detrimental material in cracks to be filled. Conform to temperature limitations for epoxy to be used. Finish to match adjacent areas.

3. Repair Method 3: Cut a bevel groove 3/8 to 1/2 inch in width and depth, and caulk with sealant in accordance with manufacturer's instructions. This repair method is only to be used where expressly allowed by the Engineer. Groove and caulk shall be applied on wet or hydrostatic pressure side of surface where occurs.

C. REPAIR METHOD USE:

1. Repair Method 1 shall be used for all cracks in walls, surfaces sloped 1:1 or greater, beams, columns, slabs, overhead surfaces and generally for liquid retaining surfaces. Need for repair depends upon crack width, location, and surface conditions under service conditions. Epoxy grout shall be used for repair of structural cracks and chemical grout (expanding urethane) shall be used for repair of non-structural cracks at liquid-containing structures. The Engineer shall determine whether a crack is classified as structural or non-structural.

2. Repair Method 2 may be utilized in lieu of Method 1 for slabs which receive a raked finish. Method 2 may also be used with Engineer's approval for exposed troweled and broomed finishes after review of conditions, degree of exposure to public, and proposed repair product and installation. Finish shall substantially match adjacent surfaces.

3. Repair Method 3 shall be limited to dry-surface slabs, walls subject to less than three feet of liquid pressure, or as specifically directed by the Engineer. Method 3 is not an equivalent repair method to Methods 1 or 2, which shall be considered the standards.

3.16 WATERTIGHTNESS TESTING AND REPAIR

A. WATER RETAINING CONCRETE TANKS AND CHANNELS:

Concrete tanks, basins, reservoirs and channels which have walls or slabs subjected to hydrostatic pressure shall be tested for watertightness. The tests shall be made after the structure is complete and the concrete has achieved its specified 28-day strength, but prior to application of waterproofing coating or backfilling. Filling of the tank for the watertightness test shall not exceed a rate of 4 feet/hour. Filling with water at this maximum rate shall continue to the maximum operating water surface. The water shall be kept at this level for at least 72 hours and then the dry sides of all walls and the base perimeter of the slab shall be visually inspected for evidence of leakage. Damp spots, leakage, or seepage revealed by

the test, including those caused by shrinkage of concrete, honeycombed areas, construction joints, or other sources shall be repaired by Method 1, paragraph 03300-3.16-B.1. Damp spots are defined as spots from which water that can be picked up on dry hand.

The Contractor shall re-test tanks or channels which have been repaired to check the suitability of repairs. Water required for testing and re-testing shall be provided by the Contractor and disposed of so as not to create a nuisance.

All liquid retaining or conveying concrete structures must also meet maximum leakage criteria set forth in ACI 350.1 as follows:

Structure Type	ACI 350.1 Designation	Tightness Criterion
Cylindrical water and wastewater storage tanks and reservoirs other than digesters	HST-025	0.025% per day
Digesters	SHT-050	0.050% per day (surcharged hydrostatic test)
Rectangular basins and tanks	HST-050	0.050% per day
Concrete paved reservoirs and channels	HST-100	0.10% per day

Note: All damp spots on or leakage through walls or wall-to-slab joints shall be repaired as described above. Leakage equal to or less than the values shown in the table above is permitted only through the base slab or mat foundation.

Volume loss shall be measured by measuring the vertical distance from the water surface to a fixed point on the tank above the water surface taking into account evaporation from open surfaces. If the drop in water surface in the 24-hour period exceeds the values given in the table above, exclusive of evaporation, the leakage shall be considered excessive and shall be remedied.

3.17 COLORED CONCRETE

Comply with color admixture manufacturer's recommendations. Provide where indicated on Drawings.

3.18 CLEANUP

Upon completion of the work and prior to final inspection, the Contractor shall clean all concrete surfaces. The cleaning procedures shall be as follows: After sweeping with an ordinary broom to remove the loose dirt, the surface shall be flushed with clean water. Final scrubbing by hand or machine shall follow.

Floors that have curing and sealing compound shall be cleaned of loose dirt and debris by sweeping with ordinary brooms. They shall then be washed and mopped with clean water. Finally, one additional coat of the same clear curing and sealing compound shall be applied in the same manner as specified.

END OF SECTION

SECTION 03600

GROUT

PART 1--GENERAL

1.01 DESCRIPTION

This section specifies grout for column and other structural support bases, equipment bases, crack repair, surface repair and uses other than masonry. Grout for masonry is specified in Section 04200.

1.02 QUALITY ASSURANCE

A. QUALITY CONTROL BY CONTRACTOR:

To demonstrate conformance with the specified requirements for grout, the Contractor shall provide the services of an independent testing laboratory conforming to Section 01410. Costs of testing laboratory services shall be borne by the Contractor.

B. SPECIAL INSPECTION:

Where Special Inspection is specified, noted on the drawings, required by Code or product manufacturer, Owner shall provide the services of a qualified Special Inspector according to Section 01400.

C. REFERENCES:

This section contains references to the following documents. They are a part of this section as specified and modified. Where a referenced document contains references to other standards, those documents are included as references under this section as if referenced directly. In the event of conflict between the requirements of this section and those of the listed documents, the requirements of this section shall prevail.

Unless otherwise specified, references to documents shall mean the documents in effect at the time of Advertisement for Bids or Invitation to Bid (or on the effective date of the Agreement if there were no Bids). If referenced documents have been discontinued by the issuing organization, references to those documents shall mean the replacement documents issued or otherwise identified by that organization or, if there are no replacement documents, the last version of the document before it was discontinued. Where document dates are given in the following listing, references to those documents shall mean the specific document version associated with that date, regardless of whether the document has been superseded by a version with a later date, discontinued or replaced.

Reference	Title
ASTM C33	Concrete Aggregates
ASTM C40	Organic Impurities in Fine Aggregates for Concrete
ASTM C88	Soundness of Aggregates by Use of Sodium Sulfate or Magnesium Sulfate
ASTM C117	Material Finer Than 75 μm (No. 200) Sieve in Mineral Aggregates by Washing
ASTM C136 REV A	Sieve Analysis of Fine and Coarse Aggregates
ASTM C150	Portland Cement
ASTM C289	Potential Reactivity of Aggregates (Chemical Method)
ASTM C881	Epoxy-Resin-Base Bonding Systems for Concrete
ASTM C1107	Packaged Dry, Hydraulic-Cement Grout (Nonshrink)
ASTM D2419	Standard Test Method for Sand Equivalent Value of Soils and Fine Aggregate

1.03 SUBMITTALS

The following information shall be provided in accordance with Section 01300:

1. Complete product literature and installation instructions for epoxy grout (all uses) and cementitious non-shrink grout.

2. Current ICBO Evaluation Report, or equivalent in other jurisdictions, for adhesives used for dowel and anchor setting.

PART 2--PRODUCTS

2.01 MATERIALS

A. CEMENT:

Portland cement shall be ASTM C150, Type II or Type V, low alkali, containing less than 0.60 percent alkalies.

B. AGGREGATE:

1. GENERAL: Aggregate shall be nonreactive and shall be washed before use.

When sources of aggregate are changed, test reports shall be provided for the new material. The tests specified shall be performed prior to commencing grout work.

2. FINE AGGREGATE: Fine aggregate shall be hard, dense, durable particles of either sand or crushed stone regularly graded from coarse to fine and shall conform to ASTM C33 as modified herein. When tested in accordance with ASTM C136, gradation shall be such that 100 percent by weight will pass a standard No. 8 mesh sleeve and no less than 45 percent by weight will pass a standard No. 40 mesh sieve.

   Variation from the specified gradations in individual tests will be acceptable if the average of three consecutive tests is within the specified limits and the variation is within the permissible variation listed below:

U.S. standard sieve size	Permissible variation in individual tests, percent
30 or coarser	2
50 or finer	0.5

Other tests shall be in accordance with the following specifications:

Test	Test method	Requirements
Organic Impurities	ASTM C40	Color lighter than standard
Amount of Material Passing No. 200 Sieve	ASTM C117	3% maximum by weight
Soundness	ASTM C88	10% maximum loss with sodium sulfate
Reactivity	ASTM C289	Innocuous aggregate
Sand Equivalent	ASTM D2419	Minimum 80

C. ADMIXTURES:

1. GENERAL: Admixtures shall be compatible with the grout. Calcium chloride or admixtures containing calcium chloride are not acceptable. Admixtures shall be used in accordance with the manufacturer's recommendations and shall be added separately to the grout mix.

2. ACCEPTABLE ADMIXTURES: Acceptable products including water reducing, water reducing and retarding, and superplasticizing are specified in Section 03300. Contractor shall select as appropriate for the use intended and in conformance with manufacturer’s recommendations and these specifications.

3. LUBRICANT FOR CEMENT PRESSURE GROUTING: Lubricant additive for cement pressure grouting shall be Intrusion Prepakt Intrusion Aid, Sika Intraplast N, or equal.

D. WATER:

Water for washing aggregate, for mixing and for curing shall be free from oil and deleterious amounts of acids, alkalies, and organic materials; shall not contain more than 1000 mg/1 of chlorides as Cl, nor more than 1300 mg/1 of sulfates as SO_4; and shall not contain an amount of impurities that may cause a change of more than 25 percent in the setting time of the cement nor a reduction of more than 5 percent in the compressive strength of the grout at 14 days when compared with the result obtained with distilled water. Additionally, water used for curing shall not contain an amount of impurities sufficient to discolor the grout.

2.02 GROUT

A. DRYPACK GROUT:

Drypack grout shall be a mixture of approximately one part cement, 1-1/2 to 2 parts fine aggregate, water reducing retarder, and sufficient water to make a stiff workable mix.

B. CEMENTITIOUS NONSHRINK GROUT:

Cementitious nonshrink grout is available with both metallic and nonmetallic aggregate. Metallic aggregate grout shall be Master Builders Embeco 636, Burke Company Metallic Spec Grout, Sonneborn Ferrolith G Redimix, or equal. Nonmetallic aggregate grout shall be Five Star Products, Inc. Five Star Grout, Master Builders Masterflow 713, Burke Company Non-Ferrous, Non-Shrink Grout, Hi-Flow Grout by Euclid Chemical Company, or equal.

C. EPOXY GROUT FOR EQUIPMENT MOUNTING:

Epoxy grout for equipment mounting shall be a non-cementitious, resin based, multi-component formulation. Epoxy grout shall be flowable, with shrinkage minimized to achieve minimum 98% effective bearing area. Acceptable products include: Masterflow 648 CP Plus by Masterbuilders; Sikadur 42 by Sika Corporation; E3-G by Euclid Chemical Company; or equal.

D. EPOXY GROUT FOR CRACK REPAIR AND DOWEL ANCHORAGE:

Except as noted below, epoxy grout shall be a high modulus, two-component, moisture insensitive, 100 percent solids, thermosetting modified polyamid epoxy compound. The consistency shall be a paste form capable of not sagging in horizontal or overhead anchoring configurations. Material shall conform to ASTM C881, Type IV, Grade 3, and shall have a heat deflection temperature in excess of 130 degrees F. Candidate manufacturers include Master Builders Concresive Standard Paste or SPL, and Sika Corporation Sikadur Hi-Mod Series, or equal.

Epoxy for pressure grouting/crack injection shall be a two-component, moisture insensitive, high modulus, injection grade, 100 percent solids, blend of epoxy-resin compounds. The consistency shall be as required to achieve complete penetration in hairline cracks and larger. Material shall conform to ASTM C881, Type 1, Grade

1. Candidate manufacturers include Sika Corporation Sikadur 52, Master Builders SCB Concresive 1300 series, and Adhesive Technology Corporation SLV 300 series, or equal.

E. POLYMER CONCRETE (PROFILING MORTAR):

Polymer concrete (profiling mortar) for resurfacing or patching shall consist of a liquid binder and dry aggregate mixed together to make a mortar or grout of a consistency as required for the application. The liquid binder shall be a chemical and oil resistant, stress relieved, low modulus, moisture insensitive, two-component epoxy-resin compound. The consistency shall be similar to lightweight oil for proper mixing with aggregate. Material shall conform to ASTM C881, Type 3, Grade 1. Candidate manufacturers include Sika Corporation Sikadur Lo-Mod series, Master Builders Concresive 1490, and Adhesive Technology Corporation 400 series, or equal.

Alternatively, polymer concrete may be a one-component, shrinkage compensated, polymer-modified cement based mortar, with or without fiber reinforcement. Candidate manufacturers include Master Builders R300 series, or equal.

The aggregate shall be oven dry in sealed packages until time of mixing, and shall be of size and consistency compatible with recommendations of manufacturer of liquid binder for intended application.

F. ADHESIVE FOR DOWEL AND ANCHOR SETTING:

Adhesive for setting dowels and anchoring connection/baseplate bolts may either be tube applied or capsule style. Adhesive shall evidence approval for the use intended by ICBO certification report or other recognized and Code compliant agency.

Tube-applied adhesive shall be a modified epoxy formulation. Acceptable products include HY150 by Hilti, SET Adhesive by Simpson Strong-Tie Company, or equal.

Adhesive resin capsules shall consist of sealed glass or foil capsules containing premeasured amounts of a polyester or vinylester resin, quartz sand aggregate and a hardener contained in a separate vial within the capsule. Acceptable adhesive capsule products include HVU by Hilti, Needle Capsule or Chem-Stud by Powers-Rawl, or equal. Capsule adhesives shall utilize the same manufacturer's insert stud with chisel point, or Contractor shall demonstrate through submittal to the Engineer that the substitute proposed substantially meets or exceeds the geometric and material properties of same.

2.03 PRESSURE GROUTING EQUIPMENT

Pressure grouting equipment shall include a mixer and holdover agitator tanks and shall be designed to place grout at pressures up to 50 psi. Gages shall be provided to indicate pressure used. The mixer shall be provided with a meter capable of indicating to one-tenth of a cubic foot the volume of grout used.

2.04 PRODUCT DATA

The following information shall be provided in accordance with Section 01300.

A. MANUFACTURER'S DATA:

Manufacturer's data shall be provided for the following:

1. Bonding compounds
2. Pressure grout
3. Retardants
4. Polymer concrete

B. LABORATORY TEST REPORTS:

Test reports on previously tested materials shall be accompanied by the manufacturer's statement that the previously tested material is the same type, quality, manufacture, and make as that proposed for use in this project. Test reports are required for the following:

1. Cement
2. Aggregates
3. Retardants
4. Bonding compounds
5. Epoxy resin

C. EVIDENCE OF TESTING LABORATORY COMPETENCE:

The Contractor shall require that the laboratory provide directly to the Engineer evidence of the most recent inspection of its facilities by the Cement and Concrete Reference Laboratory of the National Bureau of Standards. The evidences shall show that deficiencies mentioned in the report of that inspection have been corrected. The evidence of inspection shall be provided prior to delivery of materials to the job site.

PART 3--EXECUTION

3.01 GENERAL

Bonding compound for use with grout is specified in Section 03300. Primer, if required for polymer concrete, shall be provided per manufacturer's recommendation.

3.02 DRYPACK GROUT

Drypack grout shall be used for small or shallow built-up surfaces and minor repairs.

Surfaces required to be built up with drypack grout shall be roughened by brushing, cleaned, and coated with the bonding compound specified in paragraph 03300-2.05 before

the application of the grout. The drypack grout shall be applied immediately following the application of the bonding compound in bands or strips to form a covering of the required thickness. The covering shall be smooth. Construction joints in the grout shall be sloped and shall be cleaned and wetted before application is resumed.

Drypack grout shall be cured in accordance with Section 03300.

Grout shall not be placed during freezing weather unless adequate protection is provided.

3.03 CEMENTITIOUS NONSHRINK GROUT

Nonshrink, cementitious, nonmetallic aggregate grout shall be used for column base plates, structural bearing plates, and all locations where the general term “non-shrink grout” is indicated on the drawings. Use of this grout to support the bearing surfaces of machinery shall be as specified in Section 11002 or as detailed on the Drawings for specific locations or pieces of equipment. If guidance in not provided in locations noted above, use of non-shrink grout for equipment mounting shall be limited to equipment less than 20 horsepower or 1,000 pounds. Grout shall be placed and cured in accordance with manufacturer's instructions.

3.04 EPOXY GROUT FOR EQUIPMENT MOUNTING

Prepare concrete surfaces of equipment pads as indicated in details on the Drawings and as required by the epoxy grout manufacturer. Epoxy grout for equipment mounting shall be placed and cured in accordance with the requirements of Section 11002, details on the Drawings, and in strict conformance with manufacturer’s recommendations.

3.05 EPOXY GROUT FOR CRACK REPAIR AND DOWEL ANCHORAGE

Epoxy grout shall be used for repairing cracks by pressure grouting or gravity flow, repairing structural concrete, and may be used for setting reinforcing dowels or anchor bolts into holes for grouting. Concrete shall be primed in accordance with the grout manufacturer's instructions.

Use of epoxy grout for anchorage of bolts or reinforcing dowels shall be subject to the following conditions:

1. Use shall be limited to locations where exposure, on an intermittent or continuous basis, to acid concentrations higher than 10 percent, to chlorine gas, or to machine or diesel oils, is extremely unlikely.

2. Use shall be limited to applications where exposure to fire or exposure to concrete or rod temperature above the product's heat deflection temperature or 120 degrees F (whichever is less) is extremely unlikely. Overhead applications (such as pipe supports) because of the above concerns, shall be disallowed.

3. Approval from Engineer for specific application and from supplier of equipment to be anchored, if applicable.

4. Anchor diameter and grade of steel shall be per contract documents or per equipment supplier specifications. Anchor shall be threaded or deformed full length of embedment and shall be free of rust, scale, grease, and oils.

5. Embedment depth and hole diameter shall be as specified.

6. Holes shall have rough surfaces, such as can be achieved using a rotary percussion drill.

7. Holes shall be blown clean with compressed air and be free of dust or standing water prior to application of grout.

8. Anchor shall be left undisturbed and unloaded for full curing period.

9. Anchors shall not be placed in concrete below 25 degrees F.

3.06 ADHESIVE CAPSULES

Adhesive resin capsules may be used for setting and anchoring reinforcing dowels or anchor bolts into predrilled holes in concrete. Use of the adhesive resin capsules for anchorage of reinforcing dowels or bolts shall be as specified in paragraph 05501-3.03.

3.07 PRESSURE GROUTING

Prior to grouting, systems and holes to be grouted shall be washed clean. Washing is not required for grouting soil voids outside pipe cylinders or casing pipes. Grouting, once commenced, shall be completed without stoppage. In case of breakdown of equipment, the Contractor shall wash out the grouting system sufficiently to ensure fresh grout and adequate bond and penetration will occur upon restarting the grouting operation. Grout pressure shall be maintained until grout has set.

END OF SECTION

SECTION 04200

UNIT MASONRY

PART 1--GENERAL

1.01 DESCRIPTION

A. SCOPE:

This section specifies masonry work consisting of brick, concrete masonry units, general unreinforced and reinforced masonry construction.

B. TYPE:

Masonry work shall be constructed from units of concrete or clay in combination with reinforcing, mortar, and grout as specified.

1.02 QUALITY ASSURANCE

A. REFERENCES:

This section contains references to the following documents. They are a part of this section as specified and modified. In case of conflict between the requirements of this section and those of the listed documents, the requirements of this section shall prevail.

Unless otherwise specified, references to documents shall mean the documents in effect at the time of Advertisement for Bids or Invitation to Bid (or on the effective date of the Agreement if there were no Bids). If referenced documents have been discontinued by the issuing organization, references to those documents shall mean the replacement documents issued or otherwise identified by that organization or, if there are no replacement documents, the last version of the document before it was discontinued. Where document dates are given in the following listing, references to those documents shall mean the specific document version associated with that date, whether or not the document has been superseded by a version with a later date, discontinued or replaced.

Reference	Title
ASTM A82	Steel Wire, Plain, for Concrete Reinforcement
ASTM A90	Weight of Coating on Zinc-Coated (Galvanized) Iron or Steel Articles
ASTM A153	Zinc Coating (Hot-Dip) on Iron and Steel Hardware
ASTM C27	Classification of Fireclay and High-Alumina Refractory Brick
ASTM C55	Concrete Building Brick
ASTM C62	Building Brick (Solid Masonry Units Made from Clay or Shale)
ASTM C67	Sampling and Testing Brick and Structural Clay Tile
ASTM C90	Loadbearing Concrete Masonry Units
ASTM C91	Masonry Cement

Reference	Title
ASTM C129	Non-Load-Bearing Concrete Masonry Units
ASTM C144	Aggregate for Masonry Mortar
ASTM C150	Portland Cement
ASTM C207	Hydrated Lime for Masonry Purposes
ASTM C216	Facing Brick (Solid Masonry Units Made from Clay or Shale)
ASTM C270	Mortar for Unit Masonry
ASTM C404	Aggregates for Masonry Grout
ASTM C476	Grout for Masonry
ASTM C666	Resistance of Concrete to Rapid Freezing and Thawing
ASTM C780	Preconstruction and Construction Evaluation of Mortars for Plain and Reinforced Unit Masonry
ASTM C1019	Sampling and Testing Grout
ASTM E514	Water Penetration and Leakage Through Masonry
IBC	International Building Code, edition adopted by prevailing building department

B. SAMPLE PANEL:

A sample masonry panel for each type of masonry, approximately 6 feet long by 4 feet high shall be constructed on site for approval by the Engineer. Each panel shall show the workmanship, coursing, bond, anchors, joint reinforcing wall ties, tooling of joints, range of color, texture of masonry, and mortar color. Finished work shall match the approved sample panel.

C. APPEARANCE:

Source or supply of materials shall not be changed after the work has started if the appearance of the finished work would be affected.

D. EFFLORESCENCE TESTING:

Certified efflorescence test reports shall be provided on masonry units that are to be exposed to weathering. Schedule tests far enough in advance of starting masonry work to permit retesting if necessary. Test three pairs of specimens of each type of masonry unit for efflorescence in accordance with ASTM C67. If any pair is rated "effloresced," the units represented by the samples will be rejected.

1.03 SUBMITTALS

The following information shall be provided in accordance with Section 01300:

1. A copy of this specification section, with addendum updates included, and all referenced and applicable sections, with addendum updates included, with each paragraph check-marked to indicate specification compliance or marked to indicate requested deviations from specification requirements. Check marks (✓) shall denote full compliance with a

paragraph as a whole. If deviations from the specifications are indicated, and therefore requested by the Contractor, each deviation shall be underlined and denoted by a number in the margin to the right of the identified paragraph, referenced to a detailed written explanation of the reasons for requesting the deviation. The Engineer shall be the final authority for determining acceptability of requested deviations. The remaining portions of the paragraph not underlined will signify compliance on the part of the Contractor with the specifications. ***Failure to include a copy of the marked-up specification sections, along with justification(s) for any requested deviations to the specification requirements, with the submittal shall be sufficient cause for rejection of the entire submittal with no further consideration.***

2. Placement drawings showing details of all steel reinforcing.

3. Three representative full-size sample masonry units showing full range of color, texture, finish, and dimensions.

4. Masonry unit certificates showing compliance to the specifications shall be submitted for each type of masonry unit.

5. Reinforcing certificates showing compliance to the specifications shall be submitted for reinforcing steel, including reinforcing steel wire and joint reinforcing, as specified herein and in Section 03200.

6. Certified efflorescence test reports specified in paragraph 04200-1.02 D.

7. Shop drawings showing details of anchors, adjustable wall ties, rebar positioning devices, and other accessories necessary for work.

8. Manufacturer's data and descriptive literature for each type of masonry accessory, premixed mortar, masonry cement, grout admixtures, and flashing. Clearly mark the data to indicate which type, size, or item the Contractor intends to provide. Data shall show conformance to specified requirements and Contractor's proposed usage details.

1.04 DELIVERY, STORAGE, AND HANDLING

Cementitious materials shall be delivered to the site in unbroken containers, plainly marked and labeled with manufacturers' names and brands, stored in dry, weathertight enclosures to prevent entry of foreign materials and damage by water or dampness. Masonry units shall be stored off the ground and handled with care to avoid chipping and breakage. Materials shall be protected from damage and, except for sand, kept dry until used. Sand shall be covered to prevent intrusion of water and foreign materials and to prevent drying. Materials containing frost or ice shall not be used.

PART 2--PRODUCTS

2.01 MASONRY UNITS

A. CONCRETE MASONRY UNITS:

1. GENERAL: Concrete masonry units shall be of modular dimensions and air, water, or steam cured. Unless otherwise specified, exposed surfaces of units shall be comparatively smooth and of uniform texture. Special surface texture or, architectural faces shall be provided where specified.

2. HOLLOW LOAD-BEARING UNITS: Hollow load-bearing units shall conform to ASTM C90, Grade N, Type I, made with lightweight aggregate. Load-bearing units shall be provided, unless otherwise specified.

3. HOLLOW NON-LOAD-BEARING UNITS: Hollow non-load-bearing units, where specified, shall conform to ASTM C129, Type I, made with lightweight aggregate. Load-bearing units may be provided in lieu of non-load-bearing units.

4. CONCRETE BUILDING BRICK: Concrete building brick shall conform to ASTM C55, Grade N, Type I, and shall be made with lightweight aggregate. Concrete brick shall match the concrete masonry units in color and surface characteristics.

5. SOLID LOAD-BEARING UNITS: Solid load-bearing units shall conform to ASTM C145, Grade N, Type I, and made with lightweight aggregates. Solid load-bearing units shall be provided where specified.

6. INTEGRALLY PIGMENTED LOADBEARING UNITS (QUICK-BRIK): Integrally pigmented load bearing units shall be integrally pigmented load bearing concrete units meeting ASTM C 90, Grade N, Type I, made with lightweight aggregate. Stretcher unit dimensions shall be a nominal 4 inch high and 16 inch long, width as indicated on the Drawings. Units shall be incorporate integral metallic oxide pigments and an integral polymer water repellent. Units shall be manufactured by an Oldcastle Architectural Products Company or Equal. Color to be selected from manufacturer's standard colors.

7. SPECIAL SHAPES: Special shapes such as bond beam units, lintel units, closure units, header units, and jamb units shall be provided as necessary to complete the work. Special shapes shall conform to the requirements for the units with which they are used.

B. FACING BRICK:

Unless building brick is specifically indicated on drawings, facing brick shall be provided for all brickwork. Facing brick shall conform to ASTM C216, Grade SW, Type FBS, 3 5/8 inches thick, 2 ¼ inches high, and 7 5/8 inches long. Facing brick shall be of uniform color and texture.

2.02 MORTAR

A. CEMENT:

Cement shall be Portland cement conforming to ASTM C150, Type II, low alkali containing less than 0.60 percent alkalies.

B. HYDRATED LIME:

Hydrated lime shall conform to ASTM C207, Type S.

C. MASONRY CEMENT:

Masonry cement shall conform to ASTM C91, except that for masonry cement used in mortar for exterior walls, the air content of the mortar specimen shall be not more than 16 percent by volume in lieu of 22 percent. Containers shall bear complete instructions for proportioning and mixing to obtain the required types of mortar.

D. SAND:

Aggregate for mortar shall be sand conforming to ASTM C144.

E. WATER:

Water shall be clean, potable, and free from substances which could adversely affect the mortar.

F. WATERPROOFING COMPOUND:

Mortar shall contain an admixture of Master Builders Rheomix 235, Sonneborn Hydrocide Powder, W. R. Grace Dry Block, or equal.

G. MORTAR TYPES:

Unless otherwise specified, mortar shall be ASTM C270, Type M for foundation and exterior walls and other load-bearing masonry, and Type S for non-load-bearing interior masonry. Waterproofing compound shall be added in accordance with manufacturer's recommendations. Air content shall not be less than 11 percent. Where colored mortar is specified to match the masonry units, add colorant to obtain the color indicated. Colorant shall be alkali-resistant iron oxide based and shall be Sonneborn "Sonobrite," Solomon Grind-Chem Service, Inc., "Concentrated Cement Color," or equal.

H. PREMIXED MORTAR:

Premixed mortar shall be ASTM C270, Type M or S for use as specified in paragraph 04200-2.02 G. Water proofing compound shall be added in accordance with manufacturer's recommendation. Air content shall not be less than 11 percent.

I. ADMIXTURES:

Admixtures may be used in mortar to retard curing and provide up to 36 hours of workability, provided that the admixture does not adversely affect bonding or compressive strength.

2.03 ACCESSORIES

A. HORIZONTAL JOINT REINFORCEMENT:

Horizontal joint reinforcement shall be fabricated from cold drawn steel wire, ASTM A82. Wire shall be hot-dipped galvanized after fabrication in accordance with ASTM A153. Reinforcement shall be truss type with two or more longitudinal wires welded to a continuous diagonal cross wire, or ladder type with perpendicular cross wires not more than 16 inches o.c. Reinforcement shall be provided in flat sections 10 feet long, and preformed corners and tees approximately 30 inches long. Overall width shall be approximately 2-inches less than nominal thickness of wall.

For single-wythe walls, two 9-gage longitudinal wires and 9-gage cross wires shall be provided.

For veneer-faced walls, three 9-gage longitudinal wires (one for each face shell of concrete masonry units and one for the veneer wythe) and 9-gage cross wires shall be provided. Alternatively, adjustable pintle ties may be provided for the veneer and two wire horizontal joint reinforcing for the CMU wall with the horizontal joint reinforcing designed to accept the pintle ties.

B. REINFORCING BARS:

Reinforcing steel shall be as specified in Section 03200.

C. ANCHORS AND TIES:

1. GENERAL: Anchors and ties shall be approved designs of stainless steel, zinc-coated steel, or noncorrosive metal having the equivalent total strength of steel types. Zinc-coated steel shall be coated by the hot-dip process after fabrication to a minimum of 1.25 ounces of zinc per square foot of surface when tested in accordance with ASTM A90.

2. CORRUGATED METAL TIES: Metal ties shall be not less than 7/8-inch wide by approximately 7 inches long and not lighter than 22 gage.

3. RIGID STEEL ANCHORS: Rigid steel anchors shall be not less than 1 inch wide, 1/4 inch thick, and 24 inches long with each end bent not less than 2 inches.

4. DOVETAIL FLAT BAR OR WIRE ANCHORS: Flat bar anchors shall be sheet steel, not lighter than 16 gage, and 7/8-inch wide, with end turned up 1/4 inch. Wire anchors shall be not lighter than 6 gage, 7/8-inch wide with wire looped and closed.

5. DOVETAIL ANCHOR SLOTS: Unless otherwise specified, Dovetail slots shall be made of galvanized steel with minimum dimensions of 1 inch wide back by 1 inch deep by 5/8-inch throat, 22 gage.

6. MASONRY VENEER ANCHORS: Rectangular adjustable tie system with wall eyelet sections welded to horizontal joint reinforcement 16 inches on center maximum. Minimum wire size shall be W2.8 (3/16 inch wire), hot dipped galvanized 1.5 oz. ASTM A 153 Class B2. Wall tie pintle sections shall fit into eyelet sections with maximum clearance of 1/16 inch with a maximum offset of 1 ¼ inches. Pintle anchors shall be sufficiently long enough to extend ½ inch onto the outer face shell of the masonry veneer unit.

7. VERTICAL BAR POSITIONERS: Minimum W1.7 (9 gage) hot dipped galvanized wire. For CMU walls with one vertical bar, positioner shall be fabricated to center bar in cell. For CMU walls with two vertical bars/cell, positioner shall be fabricated to locate each of the bars 3 inches for the opposite outside faces of the CMU.

D. THROUGH-WALL FLASHING:

Flashing, where specified, shall be 5-ounce, electrolytic copper sheet, uniformly coated on both sides with acidproof, alkaliproof, elastic bituminous compound. Factory applied coating shall weigh not less than 6 ounces per square foot (approximately 3 ounces per square foot on each side).

E. PREFORMED CONTROL JOINT FILLER:

Rubber conforming to ASTM D 2000 or PVC conforming to ASTM D 2287. 2 5/8 inch by 1 ½ inch for regular joints and 2 5/8 inch by 1 inch for tee joint.

2.04 GROUT

A. GENERAL:

Grout shall comply with ASTM C476, shall use Type II cement, and shall be proportioned by volume to achieve a minimum 28-day compressive strength of 2,000 psi, minimum. Grout shall have sufficient water added to produce a consistency for pouring without segregation with a slump between 8 and 11 inches.

B. AGGREGATE:

Aggregate shall comply with ASTM C404.

C. FINE GROUT:

Fine grout shall be composed of one part cement, not more than 1/10 part lime, and 2 1/4 to 3 parts fine aggregate.

D. COARSE GROUT:

Coarse grout shall be composed of one part cement, not more than 1/10 part lime, 2 to 3 parts fine aggregate, and not more than 2 parts coarse aggregate.

PART 3--EXECUTION

3.01 PREPARATION

A. GENERAL:

Foundations for masonry work shall be straight, on-line, and level. All surfaces to be bonded with masonry shall be clean and free from laitance or foreign materials. Reinforcing dowels shall be in the correct location as specified. The placement and location of anchor ties, inserts, and other embedded items in concrete or other adjoining work shall be coordinated by the Contractor to suit the masonry work.

B. PROTECTION:

1. Exposed surfaces shall be protected from mortar and other stains. When mortar joints are tooled, remove mortar from exposed surfaces with fiber brushes and wooden paddles. Base of walls shall be protected from splash stains by covering adjacent ground with sand, sawdust, or polyethylene.

2. Uniform loads shall not be applied for at least 12 hours or concentrated loads for at least 72 hours after masonry is constructed.

3. Temporary bracing shall be provided as required to prevent damage during construction.

4. Protective boards for polyester film shall be provided during job installation to ensure no damage from building debris.

3.02 WORKMANSHIP

Masonry shall be level and plumb. Story poles or gage rods shall be used throughout the work. **Changes in coursing or bonding after the work is started will not be permitted; neither will carrying one section of the walls up in advance of the others be permitted. Unfinished work shall be stepped back for joining with new work; toothing will not be permitted.** Heights of masonry at each floor and at sills and heads of openings shall be checked with an instrument to maintain the level of the walls. Door and window frames, louvered openings, anchors, pipes, ducts, and conduits shall be built in as the masonry work progresses. Spaces around metal door frames shall be filled solidly with mortar. Drilling, cutting, fitting, and patching to accommodate the work of others shall be performed by masonry mechanics. Masonry shall be cut with masonry saws for exposed work. Structural steelwork, bolts, anchors, inserts, plugs, ties, lintels, and miscellaneous metalwork shall be placed in position as the work progresses. Chases of approved dimensions for pipes and other purposes shall be provided where specified and necessary. Tops of exposed walls and partitions not being worked on shall be covered with a waterproof membrane secured in place and extended down at least 2 feet on both sides.

3.03 MORTAR MIXING

When shovels are used to add the sand to the mixer instead of volumetric dispensers, the number of shovel loads needed shall be established by use of a one cubic foot container. Periodically after the initial determination, the number of shovel loads shall be verified to maintain control and accuracy of proportions.

Mortar shall be mixed in a mechanical batch mixer for not less than 3 nor more than 5 minutes after all ingredients are in so as to produce a uniform mixture. Water shall be added gradually as required to produce a workable consistency. Mortar not formulated to include retarding admixtures, which has not been placed in final position within 2-1/2 hours after the initial mixing, shall not be retempered and used. Use of antifreeze compounds, salts, or other substances to lower the freezing point of mortar is prohibited.

Mortar shall be mixed in accordance with ASTM C270 to obtain type mortar required. Where colored mortars are required, pigments may be added at the site or provided as part of prepackaged mortar mix. When masonry cement is used, mixing shall conform to printed instructions of the masonry cement manufacturer.

3.04 MORTAR JOINTS

Mortar joints shall be a uniform thickness of 3/8-inch unless otherwise specified. Exposed joints shall be tooled slightly concave with a round or other suitable jointer when the mortar is thumbprint hard except where otherwise required to match existing construction. For horizontal joints, jointers shall be at least 12 inches long for brickwork and 16 inches long for concrete masonry. Jointers shall be slightly larger than the width of the joint so that complete contact is made along the edges of the units, compressing and sealing the surface of the joint. Joints that will not be exposed shall be struck flush. Vertical joints shall be tooled first. Horizontal joints shall be level; vertical joints shall be plumb and in alignment from top to bottom of wall within a tolerance of plus or minus 1/2 inch in 40 feet.

Weep holes shall be placed at a maximum spacing of 32 inches at the base of cavity walls or veneer walls and in the course bearing on through-wall flashing.

3.05 TOLERANCES

Masonry work shall be within the following limits:

1. Pilasters and Columns: 1/4 inch from true line.

2. Face of Brick: 1/32 inch from face of adjacent brick.

3. Face of Concrete Masonry Unit: 1/16 inch from face of adjacent unit.

4. Variation from True Plane: 1/4 inch in 10 feet and 1/2 inch maximum in 20 feet or more.

5. Variation from Plumb: 1/4 inch in each story, noncumulative and 1/2 inch maximum in two stories or more.

6. Variation from Level: 1/8 inch in 3 feet, 1/4 inch in 10 feet, and 1/2 inch maximum.

7. Variation in Wall Thickness: Plus or minus 1/4 inch.

3.06 VENEERS

A. GENERAL:

Veneer, either or brick or architectural concrete block units, shall conform to requirements of paragraph 04200-3.05. Brick veneer shall be selected and placed so that the better face of stretchers and headers are exposed.

B. TESTING (CLAY AND SHALE BRICK):

Except during cold weather, as defined under paragraph 04200-3.16, clay or shale brick shall be tested daily on the job, prior to laying. Testing shall be done using a wax pencil to draw a circle the size of a quarter on five randomly selected bricks and applying 20 drops of water with a medicine dropper to the surface within the circle on each brick. If the average time that the water is completely absorbed in the five bricks is less than 1 1/2 minutes, bricks represented by the five bricks tested shall be wetted. Each brick shall be nearly saturated, but surface dry when laid. During cold weather, masonry units shall be kept dry until laid.

C. APPLICATION:

Unless otherwise specified, veneer units shall be laid in running bond. Joints between units shall be filled completely with mortar. The practice of slushing head joints will not be permitted. Closure units shall be laid with mortar on all bedding surfaces of unit to be laid and units in place. Dry or butt joints will not be permitted. Grouting shall be provided where specified.

D. VENEER-FACED WALLS:

Veneer shall be bonded with each layer of horizontal joint reinforcement. Additional bonding ties shall be provided spaced not more than 3 feet apart around the perimeter of and within 12 inches of all openings.

For brick sills, brick shall be laid on edge, sloped, and projected not less than 1/2 inch beyond the face of the wall to form a wash and drip. All joints shall be filled solidly with mortar and tool.

3.07 CONCRETE MASONRY UNIT WORK

A. GENERAL:

The first course shall be laid in a full bed of mortar for the full width of the unit. Succeeding courses shall be laid in running bond unless otherwise specified. Bed-joints shall be formed by applying the mortar to the entire top surfaces of the inner and outer face shells and to head joints by applying the mortar for a width of about 1 inch to the ends of the adjoining units. The mortar shall be of such thickness that it will be forced out of the joints as the units are placed in position. Where anchors, bolts, and ties occur within the cells of the units, metal lath

shall be placed in the joint at the bottom of such cells and the cells filled with mortar or grout as the work progresses. Except at grouted or reinforced masonry, concrete brick shall be used for bonding walls, working out the coursing, topping out walls under sloping slabs, distributing concentrated loads, backing brick headers, and elsewhere as required. Concrete masonry units shall not be dampened before or during laying.

B. SPECIAL CONCRETE MASONRY UNIT WORK:

Where exposed concrete masonry unit walls and partitions are specified, special concrete masonry unit work shall be provided. Units shall be selected for uniformity of size, texture, true plane, and undamaged edges and ends of exposed surfaces. Units shall be placed plumb, parallel, and with properly tooled joints of maximum 3/8-inch thickness, and exposed surfaces kept clean and free from blemishes or defects.

C. REINFORCED CONCRETE MASONRY UNIT WALLS:

Where vertical reinforcement occurs, cores shall be filled solid with grout, and units laid in such a manner as to preserve the unobstructed vertical continuity of cores to be filled. Adjacent webs shall be embedded in mortar to prevent leakage of grout, and mortar fins protruding from joints removed before grout is placed. Minimum clear dimensions of vertical cores shall be 2 by 3 inches. Reinforcing shall be positioned and held accurately before placing grout by using bar positioners at maximum 4-foot intervals. Vibrator shall be used to consolidate the grout. Minimum clear distance between masonry and vertical reinforcement shall be 1/2 inch. Unless otherwise specified, splices shall be formed by lapping bars not less than 48 bar diameters.

3.08 BONDING AND ANCHORING

Unless otherwise specified, partitions shall extend from the floor to the bottom of the construction above. Walls and partitions shall be structurally bonded and anchored to each other and to concrete walls and beams. Unless otherwise specified, non-load-bearing partitions and interior walls shall be securely anchored to the construction above in a manner that provides lateral stability while permitting unrestricted deflection of construction above. Anchors shall be completely embedded in mortar joints.

In addition, bonding and anchoring shall comply with the following procedures unless otherwise specified.

1. At corners of load-bearing walls, provide a true masonry bond in each course.

2. At intersections of load-bearing walls, provide a true masonry bond in each course, or anchor with rigid steel anchors not more than 2 feet apart vertically.

3. At intersections of non-load-bearing partitions with other walls or partitions, tie with wire mesh ties at vertical intervals of not more than 2 feet or with masonry bonding in alternate courses.

4. At masonry walls facing or abutting new concrete members, anchor

masonry to the concrete with dovetail or wire-type anchors inserted in slots or inserts built into the concrete. To anchor masonry walls to existing concrete members, use corrugated metal ties anchored by drive pins to the concrete. Locate anchors not more than 18 inches o.c. vertically and not more than 24 inches o.c. horizontally.

3.09 REINFORCEMENT

Completely embed reinforcing in grout. Maintain clear distance between reinforcing bars and any face of masonry unit or formed surface of not less than ¼ inch for fine grout and ½ inch for coarse grout. Do not bend reinforcing bars embedded in grout. Vertical bars shall be supported and secured against displacement by means of bar positioners. Support horizontal bars and tie to vertical bars to prevent displacement.

Tolerances for positioning of reinforcing shall be as follows:

1. ½ inch when the distance from the centerline of the reinforcing bar to the opposite outside face of the masonry, d, is 8 inches or less.

2. 1 inch when the distance from the centerline of the reinforcing bar to the opposite outside face of the masonry, d, is 24 inches or less but more than 8 inches.

3. 1 ¼ inch when he distance from the centerline of the reinforcing bar to the opposite outside face of the masonry is more than 24 inches.

4. 2 inches along required location along the length of the wall for vertical bars.

Where it is necessary to move bars more than one bar diameter or a distance exceeding the tolerances provided above to avoid interference with other reinforcing bars, conduits, or embedded items, notify the Engineer for the acceptance of the resulting arrangement of bar(s).

3.10 HORIZONTAL JOINT REINFORCEMENT

Unless otherwise specified, reinforcement shall be provided at 16-inch spacing in all masonry walls. Reinforcement shall be continuous except at control joints and expansion joints. Reinforcement above and below openings shall extend not less than 24 inches beyond each side of openings. Reinforcement shall be provided in the longest available lengths, utilizing the minimum number of splices with splice length being a minimum of 12 inches. Welded L-shaped assemblies and welded T-shaped assemblies to match the straight reinforcement shall be provided at corners and intersections of walls and partitions.

Veneer shall be bonded to the backing masonry wall by use of horizontal joint reinforcing, the requirements of IBC shall be adhered to.

3.11 CONCRETE MASONRY UNIT LINTELS AND BOND BEAMS

Special units, lintels, and bond beams shall have cells filled solidly with grout or concrete, and provided with not less than two No. 5 reinforcing bars, unless otherwise specified.

Reinforcing shall overlap a minimum dimension as indicated on the structural drawings. Bond beams and reinforcing shall terminate on each side of expansion joints and at control joints except at control joints at floor levels and roof level. Concrete masonry units used for lintels and bond beams shall have exposed surfaces of the same material and texture as the adjoining masonry units. Bond beam units shall be produced from standard vertically-voided units with precut knock-out cross walls. Lintels shall be straight and true and shall have at least 8 inches of bearing at each end and greater bearing as indicated on the structural drawings. Lintels shall have grout set at least 14 days before shoring is removed.

3.12 THROUGH-WALL FLASHING

Unless otherwise specified, flashing shall be installed where shown on the Drawings. Provide 3/16 inch minimum diameter or equivalent area weep holes at maximum spacing of 32 inches on center.

3.13 GROUT

A. GENERAL:

Fine grout shall be provided in grout spaces which are less than 2 inches in any horizontal dimension after deducting the thickness of horizontal reinforcing or in which clearance between reinforcing and masonry is less than 3/4 inch. Coarse grout shall be provided in grout spaces which are 2 inches or greater in all horizontal dimensions after deducting the thickness of horizontal reinforcing provided the clearance between reinforcing and masonry is not less than 3/4 inch. For a coarse grout pour over 5 feet high, increase grout space minimum horizontal dimension to 3 inches.

B. PLACEMENT:

Grout shall be placed from the interior side of walls, except as approved otherwise. Sills, ledges, offsets, and other surfaces shall be protected from grout droppings. Prior to grouting, the grout space shall be clean so that all spaces to be filled with grout do not contain mortar projections greater than 1/2 inch, mortar droppings, or other foreign material. Grout shall be well mixed to prevent segregation, shall be sufficiently fluid to flow into joints and around reinforcing without leaving voids, and shall be placed by pumping or pouring from buckets equipped with spouts. Grout shall be placed in a continuous pour in grout lifts not exceeding 5 feet. At grout pours exceeding 6 feet, cleanouts shall be provided in the bottom course at every vertical bar but shall not be spaced more than 32 inches on center for solidly grouted masonry. Pours shall be 1-1/2 inches below the top of masonry units in top course, except at the finish course. Grout shall be agitated mechanically thoroughly twice to eliminate voids. First agitation shall be after initial placement of grout and second agitation shall be immediately prior to grout setting. Masonry displaced by grouting operation shall be removed and relaid in alignment with fresh mortar.

3.14 EMBEDDED ITEMS

As work progresses build in steel door frames, steel window frames, anchor bolts, embedded plates, and other items required for a complete installation. Fill steel door frame voids solid with grout.

3.15 FORMS AND SHORING

Contractor shall construct forms to the shape, lines, and dimensions of members indicated and make sufficiently rigid to prevent deflections which may result in cracking or other damage to supported masonry. Forms shall not be removed until grout/concrete have reached specified strength.

3.16 CLEANING

Contractor shall protect work which may be damaged, stained, or discolored during cleaning operations.

Exposed masonry surfaces shall be cleaned with clear water and stiff fiber brushes and rinsed with clear water. Where stains, mortar, or other soil remain, scrubbing shall continue with warm water and detergent. Immediately after cleaning, each area shall be rinsed thoroughly with clear water. Damaged, stained, and discolored work shall be restored to original condition or replaced with new work.

Integrally pigmented load bearing concrete units shall be cleaned in strict conformance with manufacturer's recommendations.

3.17 COLD WEATHER CONDITIONS

A. CONSTRUCTION:

During cold weather, that is, when the air temperature is below 40 degrees F and falling, or when it appears that the air temperature will drop to 40 degrees F or below within 24 hours, Contractor shall not lay masonry unless the work is protected from freezing as specified below. Surfaces receiving mortar shall be free of ice and frost. The following requirements shall be adhered to:

1. Air Temperature 40 to 32 Degrees F: Heat sand or mixing water to produce mortar temperature between 40 and 120 degrees F.

2. Air Temperature 32 to 25 Degrees F: Heat sand and mixing water to produce mortar temperature between 40 and 120 degrees F.

3. Air Temperature 25 to 20 Degrees F: Heat sand and mixing water to produce mortar temperature between 40 and 120 degrees F. Use other heat sources on both sides of walls under construction. Use windbreaks when wind is in excess of 15 mph.

4. Air Temperature 20 Degrees F and Below: Heat sand and mixing water to produce mortar temperature between 40 and 120 degrees F. Provide enclosures and auxiliary heat to maintain air temperature above 32 degrees F on both sides of walls under construction. Ascertain that temperatures of masonry units are not less than 20 degrees F when units are laid.

B. PROTECTION:

Newly laid masonry shall be protected as specified below for the respective mean daily air temperature (MDAT), that is, the average of the daytime high temperature and the forecasted nighttime low temperature.

1. MDAT 40 to 32 degrees F: Protect masonry from rain and snow by covering the top 4 feet with weather-resistive membrane for 24 hours after laying.

2. MDAT 32 to 25 degrees F: Completely cover newly-laid masonry with weather-resistive membrane for 24 hours.

3. MDAT 25 to 20 degrees F: Completely cover newly-laid masonry with insulating blankets and weather-resistive membrane for 24 hours.

4. MDAT 20 degrees F and Below: Maintain temperature of masonry above 32 degrees F for 24 hours by providing enclosures and supplementary heat or other approved means.

3.18 HOT WEATHER CONDITIONS

A. CONSTRUCTION:

1. When ambient temperature is above 115°F or ambient air temperature is above 105°F and wind velocity exceeds 8 mph: Shade materials and mixing equipment from direct sunlight. Maintain sand piles in damp loose condition. Provide necessary conditions and equipment to produce mortar and grout having temperatures below 120°F. Use cool mixing water for mortar and grout. Maintain temperatures of mortar and grout below 120°F. Flush mixer, mortar and grout transport container, and mortarboards with cool water before the come in contact with mortar or grout. Maintain mortar consistency by re-tempering with cool water. Use mortar within 2 hours of initial mixing. Fog spray all newly constructed masonry until damp, at least three times a day until the masonry is 3 days old.

2. When ambient temperature is above 100°F or ambient air temperature is above 90°F and wind velocity exceeds 8 mph: Maintain sand piles in damp loose condition. Provide necessary conditions and equipment to produce and maintain mortar and grout having temperatures below 120°F. Maintain mortar and grout temperatures below 120°F. Flush mixer, mortar and grout transport container, and mortarboards with cool water before the come in contact with mortar or grout. Maintain mortar consistency by re-tempering with cool water. Use mortar within 2 hours of initial mixing. Fog spray all newly constructed masonry until damp, at least three times a day until the masonry is 3 days old.

3.19 FIELD SAMPLING AND TESTS

A. MORTAR:

No testing of mortar which is made by proportions in required although the Engineer may choose to test mortar as per ASTM C780 to verify uniformity of mortar throughout project duration.

B. GROUT:

Grout shall be tested in accordance with ASTM C1019. One test shall be done on each batch of grout. When batch size exceeds 8 cubic yards, one test will be done for 8 cubic yards of grout.

END OF SECTION

SECTION 05100

STRUCTURAL METAL FRAMING

PART 1—GENERAL

1.01 DESCRIPTION

This section specifies structural metals consisting of standard shapes, fasteners, rods and plates that are used in structural supports and connections.

1.02 QUALITY ASSURANCE

A. GENERAL:

Structural assemblies and shop and field welding shall meet the requirements of the AISC Manual of Steel Construction.

The use of salvaged, reprocessed or scrap materials shall not be permitted.

B. REFERENCES:

This section contains references to the following documents. They are a part of this section as specified and modified. Where a referenced document contains references to other standards, those documents are included as references under this section as if referenced directly. In the event of conflict between the requirements of this section and those of the listed documents, the requirements of this section shall prevail.

Unless otherwise specified, references to documents shall mean the documents in effect at the time of Advertisement for Bids or Invitation to Bid (or on the effective date of the Agreement if there were no Bids). If referenced documents have been discontinued by the issuing organization, references to those documents shall mean the replacement documents issued or otherwise identified by that organization or, if there are no replacement documents, the last version of the document before it was discontinued. Where document dates are given in the following listing, references to those documents shall mean the specific document version associated with that date, regardless of whether the document has been superseded by a version with a later date, discontinued or replaced.

Reference	Title
AISC Manual of Steel Construction	American Institute of Steel Construction, Manual of Steel Construction, Allowable Stress Design - 9th Edition
ASTM A36/A36M	Carbon Structural Steel
ASTM A53	Pipe, Steel, Black and Hot-Dipped, Zinc-Coated Welded and Seamless
ASTM A283/A283M	Low and Intermediate Tensile Strength Carbon Steel Plates

Reference	Title
ASTM A307	Carbon Steel Bolts and Studs, 60 000 PSI Tensile Strength
ASTM A320/A320M	Alloy-Steel and Stainless Steel Bolting Materials for Low Temperature Service
ASTM A325	Structural Bolts, Steel, Heat Treated, 120/105 ksi Minimum Tensile Strength
ASTM A500	Cold-Formed Welded and Seamless Carbon Steel Structural Tubing in Rounds and Shapes
ASTM A572	High-Strength Low-Alloy Columbium-Vanadium Structural Steel
ASTM A666	Austenitic Stainless Steel, Sheet, Strip, Plate and Flat Bar for Structural Applications
ASTM B308	Aluminum-Alloy Standard Structural Shapes, Rolled or Extruded
ASTM F436	Hardened Steel Washers
ASTM F959	Compressible-Washer-Type Direct Tension Indicators for Use with Structural Fasteners
AWS-B3.0	Welding Procedures and Performance Qualifications
AWS-D1.1	Structural Welding Code--Steel

1.03 SUBMITTALS

The following information shall be provided in accordance with Section 01300:

A. PRODUCT DATA:

1. Name and address of manufacturer(s).
2. Product specifications.
3. Manufacturer's testing procedures and standards.
4. Preparation and installation or application instructions, as appropriate

B. SHOP DRAWINGS:

1. Meet requirements of AISC recommendations and specification referenced herein.
2. Provide with details showing:
   a. Members and their connections.
   b. Anchor bolt layouts.
   c. Sequences of erection.
   d. All necessary information and dimensions.

C. QUALITY CONTROL SUBMITTALS:

1. Welder Certifications for both field and shop welders by recognized testing laboratory meeting requirements of AWS D1.1.

2. Weld Inspection Test Reports
3. High Strength Connection Bolts
   a. Certificates of Compliance: Products meet requirements of standards specified herein.
   b. Manufacturer's inspection test report results for production lot(s) furnished, to include tensile strength, yield strength, reduction of area, and elongation/hardness.
   c. Certified Mill Test Reports for nuts and bolts showing name and address of manufacturer.
4. Mill Certificates.
5. Direct Tension Indicators: Furnish manufacturer's test report meeting requirements of ASTM F959.

A copy of this specification section, with addendum updates included, and all referenced and applicable sections, with addendum updates included, with each paragraph check-marked to indicate specification compliance or marked to indicate requested deviations from specification requirements. Check marks (✓) shall denote full compliance with a paragraph as a whole. If deviations from the specifications are indicated, and therefore requested by the Contractor, each deviation shall be underlined and denoted by a number in the margin to the right of the identified paragraph, referenced to a detailed written explanation of the reasons for requesting the deviation. The Engineer shall be the final authority for determining acceptability of requested deviations. The remaining portions of the paragraph not underlined will signify compliance on the part of the Contractor with the specifications. Failure to include a copy of the marked-up specification sections, along with justification(s) for any requested deviations to the specification requirements, with the submittal shall be sufficient cause for rejection of the entire submittal with no further consideration.

PART 2—PRODUCTS

2.01 MATERIALS

A. STEEL:

Materials for structural metals shall be as specified in Table 1.

Table 1. Steel Materials

Material	Specification
Standard rolled steel sections	ASTM A992
Pipe columns	ASTM A53, Grade B
Structural steel tubing	ASTM A500, Grade B
Angles, plates and bars	ASTM A36
Stainless steel	ASTM A666, Grade A, type 304
Stainless steel bolts, nuts and washers	ASTM A320, type 304
Steel bolts	ASTM A307, Grade A
High-strength bolts	ASTM S325, Type 1

Hardened washers	ASTM F436, Type 1
Direct Tension Indicators	ASTM F959

B. ALUMINUM:

Unless otherwise specified, aluminum shall be extruded from 6061-T6 alloy, conforming to ASTM B308.

2.02 FABRICATION

Steel fabrication shall be in accordance with the AISC Manual of Steel Construction. Aluminum fabrication shall be in accordance with Aluminum Association's Specifications for Aluminum Construction.

PART 3—EXECUTION

3.01 INSTALLATION

A. GENERAL:

Meet the requirements of AISC Specifications and Code of Standard Practice.

Provide tapered washers on all sloped surfaces.

Clean concrete and masonry bearing surfaces of bond-reducing materials and roughed to improve bond to surfaces. Clean bottom surface of base and bearing plates. Set loose and attached baseplates and bearing plates for structural members on shims or leveling nuts. Tighten anchor bolts after supported members have been positioned and plumbed. Grout baseplates prior to placing loads on structures.

Measurements shall be verified at the job.

Holes shall be punched 1/16 inch larger than the nominal size of the bolts, unless otherwise specified. Whenever needed, because of the thickness of the metal, holes shall be subpunched and reamed or drilled. No drifting of bolts or enlargement of holes will be allowed to correct misalignment. Mismatched holes shall be corrected with new material.

Dissimilar metals shall be protected from galvanic corrosion by means of pressure tapes, coatings or isolators. Aluminum in contact with concrete or grout shall be protected with a heavy coat of bituminous paint.

Structural steel completely encased in concrete shall not be galvanized or painted and shall have a clean surface for bonding to concrete. Metalwork which is bent, broken or otherwise damaged shall be repaired or replaced by the Contractor.

B. WELDING:

Welding shall be done by operators who have been qualified by tests as prescribed by AWS WI Sect. 7 to perform the type of work required. The quality of welding shall conform to AWS Code for Arc Welding in Building Construction Section 4, Workmanship.

Unless otherwise specified, continuous welds shall be provided on all structural members that are exposed to weather or submerged in water or wastewater, and continuous seal welds shall be provided on both sides of all plates or structural shapes that are in contact with or submerged in water or wastewater.

C. BOLTED CONNECTIONS:

Bolted connections shall conform to AISC Framed Beam Connections and shall be bearing type connections with threads excluded from shear planes. All bolts for steel connections shall be high-strength bolts utilizing direct tension indicators and hardened washers unless specifically indicated otherwise on the Drawings. Direct tension indicator location and corresponding bolt tightening shall satisfy ASTM F 959. At slotted and oversized holes, provide hardened washers both sides of connections.

D. MISFITS IN BOLTING:

Where misfits in erection bolting are encountered, immediately notify Engineer for selection of industry standard remedy method:

1. Ream holes that must be enlarged to admit bolts and use oversized bolts.

2. Plug weld misaligned holes and redrill holes to admit standard size bolts.

3. Drill additional holes in the connection, conforming to AISC Standards for bolt spacing and end and edge distances, and add additional bolts.

4. Reject member containing misfit, mis-sized, or misaligned holes and fabricate a new member to ensure proper fit.

Do not enlarge mis-sized or misaligned holes in members by burning or by use of drift pins.

At misfits at anchor bolts, resolve misalignments between anchor bolts and boltholes in steel members in accordance with approved submittal. Do not flame cut to enlarge holes.

E. GAS CUTTING:

Do not use gas cutting torches in field for correction fabrication errors in structural framing except for secondary members concealed in finished structure and then only where approved by Engineer. Finish gas-cut sections equivalent to sheared appearance.

Bolted connections for aluminum members shall be with stainless steel bolts.

3.02 CORROSION PROTECTION

Unless otherwise specified, all structural metal and structural steel, including that used in the fabrication of process equipment, shall be coated in accordance with Section 09900. Surface preparation shall be as specified in paragraph 09900-3.02 and applicable COATSPECS and shall include the following operations:

1. Grind the exterior and interior edges of all flame-cut plates or members to a smooth surface.

2. Grind all sharp edges off of the sheared plates and punched holes.

3. Grind uneven or rough welds with high beads to a smooth finish.

Application requirements shall be as specified in paragraph 09900-3.03 and applicable COATSPECS.

3.03 CLEANING

After installation, damaged surfaces of shop primed metals shall be cleaned and touched up with the same material used for the shop coat. Damaged surfaces of galvanized metals shall be repaired as specified in Section 05910.

END OF SECTION

SECTION 05210

STEEL JOISTS

PART 1—GENERAL

1.01 DESCRIPTION

This section specifies steel joists and all accessories needed for a complete and proper installation.

1.02 QUALITY ASSURANCE

A. STANDARDS:

Comply with the following standards:

1. Standard Specifications for Open Web Steel Joints, K-Series.

2. Standard Specifications for Longspan Steel Joints, LH-Series and Deep Longspan Steel Joists, DLH-Series.

3. Recommended Code of Standard Practice for Steel Joists and Joist Girders.

B. REFERENCES:

This section contains references to the following documents. They are a part of this section as specified and modified. In case of conflict between the requirements of this section and those of the listed documents, the requirements of this section shall prevail.

Reference	Title
AWS-D1.1-90	Structural Welding Code--Steel

1.03 SUBMITTALS

Submittals shall be made in accordance with specification Section 01300. In addition, the following specific information shall be provided:

1. Manufacturer's detailed plans and lists showing the number, type, locations, spacing, anchorage and mark of all material as may be required for proper installation. All material shall be identified with its mark which also appears on the bill of material.

2. Certification of Compliance, properly identified with project name and location, with the requirements specified herein. The certificant shall state that the steel joists have been designed for the loadings indicated in the Contract Documents by a Registered Professional Engineer in the state of

the project with the Engineer's seal appearing on the certification. Upon request, calculations shall be submitted.

3. Welder 3. Welder qualifications as prescribed by AWS WI Section 7 to perform the type of work required.

4. A copy of this specification section, with addendum updates included, and all referenced and applicable sections, with addendum updates included, with each paragraph check-marked to indicate specification compliance or marked to indicate requested deviations from specification requirements. Check marks (✓) shall denote full compliance with a paragraph as a whole. If deviations from the specifications are indicated, and therefore requested by the Contractor, each deviation shall be underlined and denoted by a number in the margin to the right of the identified paragraph, referenced to a detailed written explanation of the reasons for requesting the deviation. The Engineer shall be the final authority for determining acceptability of requested deviations. The remaining portions of the paragraph not underlined will signify compliance on the part of the Contractor with the specifications. Failure to include a copy of the marked-up specification sections, along with justification(s) for any requested deviations to the specification requirements, with the submittal shall be sufficient cause for rejection of the entire submittal with no further consideration.

1.04 PRODUCT HANDLING

A. PROTECTION:

Use all means necessary to protect materials of this section before, during, and after installation, and to protect work and materials of all other trades.

B. REPLACEMENT:

In the event of damage, immediately inform the Engineer. Make no repairs without the approval of the Engineer and the steel joist manufacturer. Replacements, if necessary, shall be timely and at no additional cost to the Owner.

PART 2—PRODUCTS

2.01 MATERIALS

A. STEEL:

Steel to conform to the above referenced standard specifications.

B. FINISH:

Shop applied coat to conform to the above referenced standard specifications.

2.02 FABRICATION

A. GENERAL:

Joists shall be designed and manufactured in accordance with the above referenced standard specifications.

PART 3—EXECUTION

3.01 INSPECTION

Examine the areas and conditions under which open web steel joists are to be installed and correct conditions detrimental to the proper and timely completion of the work. Do not proceed with the work until unsatisfactory conditions have been corrected.

3.02 INSTALLATION

A. GENERAL:

Install open web steel joists, bridging, and any required accessories in accordance with manufacturer's recommendations and approved shop drawings, and as specified herein.

B. WELDING:

The quality of welding shall conform to AWSD1.1-90 Code for Arc Welding in Building Construction Section 4, Workmanship.

C. PAINT TOUCH-UP:

After completion of installation, wire brush, clean, and touch-up joists and accessories, where welded, or where primer is missing, with primer repair paint as provided by the manufacturer, applied in accordance with manufacturer's instructions.

END OF SECTION

SECTION 05300

METAL DECK

PART 1—GENERAL

1.01 DESCRIPTION

This section specifies metal deck for roof decks and composite floor deck. Accessories included for roof deck shall include ridge plates, valley plates and sump pans. Accessories included for composite floor deck shall include items specifically designated on the plans and called for in this specification.

1.02 QUALITY ASSURANCE

A. REFERENCES:

This section contains references to the following documents. They are part of this section as specified and modified. In case of conflict between the requirements of this section and those of the listed documents, the requirements of this section shall prevail.

Reference	Title
AISC	Specification for the Design of Cold-Formed Steel Structural Members
SDI	Design Manual for Composite Decks, Form Decks, and Roof Decks
AWS D1.3	Structural Welding Code
ASTM A 653	Steel Sheet, Zinc-Coated (Galvanized) or Zinc-Iron Alloy-Coated (Galvannealed) by the Hot-Dip Process
ASTM A 924	General Requirements for Steel Sheet, Metallic-Coated by the Hot-Dip Process
ASTM A 663	Steel Sheet, Zinc-Coated (Galvanized) or Zinc-Iron Alloy-Coated (Galvannealed) by the Hot-Dip Process

1.03 SUBMITTALS

The following submittals shall be provided in accordance with Section 01300:

1. Catalog data, including construction features, dimensional data, technical information which define materials, gages, and details of construction which demonstrate compliance with this specification.

2. Shop drawings fully describing metal decking fabrication, layout, and installation.

3. Welder certificates signed by Contractor certifying that welders comply with requirements in AWS D1.3 or if mechanical fasteners are used test reports form a qualified independent testing agency evidencing compliance of mechanical fasteners with requirements based on comprehensive testing.

4. A copy of this specification section, with addendum updates included, and all referenced and applicable sections, with addendum updates included, with each paragraph check-marked to indicate specification compliance or marked to indicate requested deviations from specification requirements. Check marks (✓) shall denote full compliance with a paragraph as a whole. If deviations from the specifications are indicated, and therefore requested by the Contractor, each deviation shall be underlined and denoted by a number in the margin to the right of the identified paragraph, referenced to a detailed written explanation of the reasons for requesting the deviation. The Engineer shall be the final authority for determining acceptability of requested deviations. The remaining portions of the paragraph not underlined will signify compliance on the part of the Contractor with the specifications. Failure to include a copy of the marked-up specification sections, along with justification(s) for any requested deviations to the specification requirements, with the submittal shall be sufficient cause for rejection of the entire submittal with no further consideration.

1.04 QUALITY ASSURANCE

Metal decking shall be completely protected against damage during shipment, handling, and storage.

PART 2—PRODUCTS

2.01 ACCEPTABLE PRODUCTS

Steel deck manufactured shall be a member of the Steel Deck Institute. Vulcraft and Verco are acceptable manufacturers.

2.02 GENERAL

Steel deck and accessories shall be formed from steel sheets conforming to ASTM A 653 structural quality with a minimum yield strength of 33 ksi, galvanized in accordance with ASTM A 924 with a minimum coating class of G90 as defined in ASTM A 653.

See drawings for depth, profile and metal gauge of metal deck.

Accessories including pour stops, column closures, end closures, cover plates and girder fillers shall be the type required by the Steel Deck Institute.

PART 3—EXECUTION

3.01 INSTALLATION-GENERAL

Install deck panels and accessories according to Steel Deck Institute specifications and recommendations, and in accordance with the placement plans, and requirements of this specification.

Metal decking shall be installed spanning perpendicular to supporting members. Sheets shall extend a minimum of three spans. Provide closure plates and other accessories as necessary for a complete installation.

Prior to placement of insulation at roof deck and concrete at composite floor deck, the deck shall be free of soil, debris, standing water, frost, ice, loose mill scale and all other foreign matter.

3.02 INSTALLATION-ROOF DECK

Attachment of roof deck shall be in accordance with the Drawings.

Minimum end bearing over supports shall be 1.5 inches.

Deck ends shall be lapped over supports a minimum of 2 inches.

3.03 INSTALLATION-COMPOSITE FLOOR DECK

Attachment of metal decking to supporting structure shall be with arc puddle welds, 5/8-inch diameter minimum, at edge ribs of panels at each support with additional welds an average of 12 inches apart but not more than 18 inches. Welding washer shall be used when welding steel floor deck of less than 0.028 inch thickness. Mechanical fasteners, either powder actuated or pneumatically driven, or screws may be used in lieu of welding provided they have been specifically approved.

Fasten side laps and perimeter edges of units between support at intervals not exceeding 36 inches on center, using either a #10 self drilling screw, crimp, button punch or arc puddle welds 5/8-inch diameter minimum or 1-inch long fillet weld.

Deck ends may be either butted or lapped over supports although is stud shear connectors are used, deck shall be butted only.

Bearing length shall be determined in accordance with AISI specification using a loading case of wet concrete plus deck weight plus 20 psf construction load with a minimum end bearing of 1.5 inches.

Fasten pour stops, girder fillers to supporting structure according to manufacturer’s recommendations.

Fasten column closures, cell closures, and Z closures to deck to provide tight fitting closures at open ends of ribs and sides of decking. Fasten cell closures at changes of direction of floor deck.

END OF SECTION

SECTION 05400

COLD-FORMED METAL FRAMING

PART 1--GENERAL

1.01 SCOPE

This section includes the cold-formed metal framing systems. Note that not all the cold-formed framing systems listed may be a part of this project. See Drawings for specific requirements.

Additionally, structural engineering services provided by the cold-formed metal framing fabricator shall be provided.

1.02 SYSTEM REQUIREMENTS

A. DESIGN REQUIREMENTS:

Structural design shall be in conformance with the prevailing building code for the project location and the applicable AISC Standards.

Size components to withstand design loads as shown in the drawings and as required by the prevailing building code, more restrictive where there is a conflict.

1.03 SUBMITTALS

Submittals shall be made in accordance with specification Section 01300. In addition, the following specific information shall be provided:

1. Product data and installation instructions for each type of cold-formed steel framing and accessory required.

2. Welder certificates for welders.

3. Certification of compliance, properly identified with project name and project location, with the requirements specified herein. The certification shall state that the cold-formed metal framing has been designed by a Professional Engineer registered in the state of Georgia of the project with the engineer's seal appearing of the certification. Upon request, calculations shall be submitted.

4. A copy of this specification section, with addendum updates included, and all referenced and applicable sections, with addendum updates included, with each paragraph check-marked to indicate specification compliance or marked to indicate requested deviations from specification requirements. Check marks (✓) shall denote full compliance with a paragraph as a whole. If deviations from the specifications are indicated, and therefore requested by the Contractor, each deviation shall be underlined and denoted by a number in the margin to the right of the identified paragraph, referenced to a detailed written explanation of the reasons for requesting the deviation. The Engineer shall be the final authority for determining acceptability of requested deviations. The remaining portions of the paragraph not underlined will signify compliance on the part of the Contractor with the specifications. Failure to include a copy of the marked-up specification sections, along with justification(s) for any requested deviations to the specification requirements, with the submittal shall be sufficient cause for rejection of the entire submittal with no further consideration.

1.04 QUALITY ASSURANCE

A. REFERENCE STANDARDS:

This paragraph references the following documents. They are a part of this section as specified and modified. In case of conflict between the requirements of this section and those of the listed documents, the requirements of this section shall prevail. Use the latest edition available at the time of the work.

1. AISI North American Standard for Cold-Formed Steel Framing – General Provisions.

2. AISI North American Standard for the Design of Cold-Formed Steel Structural Members.

3. AISI North American Standard for Cold-Formed Steel Framing – Header Design.

4. AISI North American Standard for Cold-Formed Steel Framing – Wall Stud Design.

5. AISI North American Standard for Cold-Formed Steel Framing – Lateral Design.

6. AWS D1.1 Structural Welding Code-Steel and D1.3 Structural Welding Code-Sheet Steel.

B. MANUFACTURER AND INSTALLER:

Manufacturer shall have minimum five years experience in producing products of the type specified. Installer shall be qualified by manufacturer to install manufacturer's cold-formed

metal framing and have two years minimum experience in application of cold-formed metal framing.

1.05 DELIVERY, STORAGE AND HANDLING

A. PACKING AND SHIPPING:

Follow manufacturer's recommendations.

B. ACCEPTANCE AT SITE:

1. Unload materials; visually check for damage.
2. Damaged materials determined by visual inspection will not be accepted.
3. Remove rejected materials from site immediately.

C. STORAGE AND PROTECTION:

Store materials under cover, off ground; protect from moisture.

PART 2--PRODUCTS

2.01 ACCEPTABLE MANUFACTURERS

Cold-formed steel framing shall be manufactured by Aegis Metal Framing, Consolidated Systems, Dale/Incor, Dietrich Metal Framing, Harrison Manufacturing Company, Marino Ware, or equal.

2.02 FRAMING MEMBERS

A. STUDS:

ASTM A 653/653 M steel, G60 galvanized, channel shaped with lipped flanges, punched web, size, thickness and grade as required by structural design calculations.

B. TRACKS:

ASTM A 653/653 M steel, G60 galvanized, channel shaped, solid web, depth compatible with studs, size and thickness as required by structural design calculations.

2.03 FRAMING ACCESSORIES

A. MATERIAL:

ASTM A 653/653 M steel, G90 galvanized.

B. CONNECTION DEVICES:

Vertical deflection clips, rigid clip angles, floor ties, hip angle, roof ties, screws, size and thickness as required by structural design calculations.

C. BRIDGING:

Channels, flat straps, solid bridging, and cross bridging, size and thickness as required by structural design calculations.

2.04 FABRICATION

A. ASSEMBLY:

Fabricate assemblies to size and configuration required in largest practical sections for delivery to site. Reinforce and brace sections to withstand shipping and installation stresses.

PART 3--EXECUTION

3.01 GENERAL

A. VERIFICATION OF CONDITIONS:

Do no commence work unless substrate is acceptable.

B. STANDARD:

Install cold-formed metal framing according to AISI's "Standard for Cold-Formed Steel Framing – General Provisions" and to manufacturer's written instructions unless more stringent requirements are indicated.

3.02 INSTALLATION

A. TOLERANCE:

Install cold-formed metal framing plumb, square, true to line and securely fastened as required by structural design. Variation from plumb, level, and true to line: 1/8 inch in 10 feet.

B. CUTTING:

Cut members by shearing or sawing.

C. SPLICES:

Install members in single piece lengths except that tracks may be spliced, butt-welded, or each length anchored to a common building frame element.

D. INSULATION:

Install insulation in framing spaces of insulated assemblies made inaccessible after erection.

E. FINISH WORK:

Clean damaged surfaces and coatings. Touch-up field welds and damaged galvanized surfaces with galvanizing repair compound.

END OF SECTION

SECTION 05500

METAL FABRICATIONS

PART 1—GENERAL

1.01 DESCRIPTION

This section specifies miscellaneous metalwork, which consists of metal fabrication other than structural metal framing.

1.02 QUALITY ASSURANCE

A. GENERAL:

Shop and field welding shall conform to the requirements of the AISC Manual of Steel Construction.

The use of salvaged, reprocessed or scrap materials will not be permitted.

B. REFERENCES:

This section contains references to the following documents. They are a part of this section as specified and modified. Where a referenced document contains references to other standards, those documents are included as references under this section as if referenced directly. In the event of conflict between the requirements of this section and those of the listed documents, the requirements of this section shall prevail.

Unless otherwise specified, references to documents shall mean the documents in effect at the time of Advertisement for Bids or Invitation to Bid (or on the effective date of the Agreement if there were no Bids). If referenced documents have been discontinued by the issuing organization, references to those documents shall mean the replacement documents issued or otherwise identified by that organization or, if there are no replacement documents, the last version of the document before it was discontinued. Where document dates are given in the following listing, references to those documents shall mean the specific document version associated with that date, regardless of whether the document has been superseded by a version with a later date, discontinued or replaced.

Reference	Title
AISC Manual of Steel Construction	American Institute of Steel Construction, Manual of Steel Construction, Allowable Stress Design
ASTM A36/A36M	Carbon Structural Steel
ASTM A48	Gray-Iron Castings
ASTM A283/ A283M	Low and Intermediate Tensile Strength Carbon Steel Plates
ASTM A307	Carbon Steel Bolts and Studs, 60,000 PSI Tensile Strength
ASTM A320/ A320M	Alloy-Steel and Stainless Steel Bolting Materials for Low

Reference	Title
	Temperature Service
ASTM A500	Cold-Formed Welded and Seamless Carbon Steel Structural Tubing in Rounds and Shapes
ASTM A1011/ A1011M	Steel, Sheet and Strip, Hot-Rolled, Carbon, Structural, High-Strength Low-Alloy and High-Strength Low-Alloy with Improved Formability
ASTM B210	Aluminum and Aluminum-Alloy Drawn Seamless Tubes
ASTM B221	Aluminum and Aluminum-Alloy Extruded Bars, Rods, Wire, Profiles and Tubes

1.03 SUBMITTALS

The following submittals shall be provided in accordance with Section 01300.

1. A copy of this specification section, with addendum updates included, and all referenced and applicable sections, with addendum updates included, with each paragraph check-marked to indicate specification compliance or marked to indicate requested deviations from specification requirements. Check marks (✓) shall denote full compliance with a paragraph as a whole. If deviations from the specifications are indicated, and therefore requested by the Contractor, each deviation shall be underlined and denoted by a number in the margin to the right of the identified paragraph, referenced to a detailed written explanation of the reasons for requesting the deviation. The Engineer shall be the final authority for determining acceptability of requested deviations. The remaining portions of the paragraph not underlined will signify compliance on the part of the Contractor with the specifications. Failure to include a copy of the marked-up specification sections, along with justification(s) for any requested deviations to the specification requirements, with the submittal shall be sufficient cause for rejection of the entire submittal with no further consideration.

2. Where applicable, manufacturer's catalog data, including construction features, dimensional data, technical information, which define details of construction that demonstrate compliance with this specification.

3. Fabrication drawings and installation drawings that provide sufficient information including detailed dimensional information to fabricate and install all metal fabrications.

PART 2—PRODUCTS

2.01 MATERIALS

Materials for miscellaneous metalwork are specified in Table 1.

Table 1. Materials for Miscellaneous Metalwork

Material	Specification
Nonstructural steel bars, angles, clips, and similar items	ASTM A36 or ASTM A283
Iron castings	ASTM A48
Structural steel tubing	ASTM A500, Grade B
Steel bolts (except flanges and anchor bolts)	ASTM A307, Grade A
Stainless steel	ASTM A320, type 304
Aluminum seamless tubes	ASTM B210-88
Aluminum bars, rods, wire, shapes and tubes	ASTM B221-88

2.02 FABRICATION

A. GENERAL:

Holes shall be punched 1/16 inch larger than the nominal size of the bolts, unless otherwise specified. Whenever needed, because of the thickness of the metal, holes shall be subpunched and reamed or shall be drilled.

Fabrication including cutting, drilling, punching, threading and tapping required for miscellaneous metal or adjacent work shall be performed prior to hot-dip galvanizing.

B. POWER DRIVEN PINS:

Power driven pins may be used in interior locations of nonprocess areas. Pins shall be heat treated steel alloy in accordance with AISI 1062 or 4063 and shall be zinc-plated. Pins shall have capped or threaded heads capable of transmitting the loads the shanks are required to support. Pins that are connected to steel shall have longitudinal serrations around the circumference of the shank. Complete information describing pin capacities and connections shall be provided to the Engineer. Proposed use and locations shall be approved by the Engineer prior to their use.

C. IRON CASTINGS:

Castings shall be as specified on the drawings. Castings weighing less than 100 pounds shall be hot-dip galvanized after machining. Castings weighing greater than 100 pounds shall be galvanized where specified.

D. COVER PLATES:

Cover plates (Checkered Plate) shall be Alcoa C-102 aluminum tread plate, Reynolds diamond tread plate, or equal. No single piece of floor and cover plate shall weigh more than 80 pounds unless specifically detailed otherwise.

E. LADDERS:

Unless otherwise specified, ladders shall be of all aluminum construction.

F. SAFETY STAIR NOSINGS:

Safety stair nosings shall be 4 inches wide and shall be Alumogrit, Type 101, as manufactured by Wooster Products, Incorporated; Alumalum, Style A, as manufactured by American Abrasive Metals Company; Style AX as manufactured by Safe-T-Metal Company, Incorporated, or equal.

G. OTHER MISCELLANEOUS STEEL METALWORK:

Other miscellaneous steel metalwork including embedded and nonembedded steel metalwork, hangers and inserts shall be as specified on the drawings and shall be hot-dip galvanized after fabrication.

PART 3—EXECUTION

3.01 INSTALLATION

A. GENERAL:

Fieldwork shall not be permitted on galvanized items. Drilling of bolts or enlargement of holes to correct misalignment will not be allowed.

Holes shall be punched 1/16 inch larger than the nominal size of the bolts, unless otherwise specified. Whenever needed, because of the thickness of the metal, holes shall be subpunched and reamed or shall be drilled. Cutting, drilling, punching, threading and tapping shall be performed prior to hot-dip galvanizing.

Dissimilar metals shall be protected from galvanic corrosion by means of pressure tapes, coatings or isolators.

Metalwork to be embedded in concrete shall be placed accurately and held in correct position while the concrete is placed or, if specified, recesses or blockouts shall be formed in the concrete. The surfaces of metalwork in contact with or embedded in concrete shall be thoroughly cleaned. If accepted, recesses may be neatly cored in the concrete after it has attained its design strength and the metalwork grouted in place. Embedments shall be as specified in Section 03300.

B. SEAT ANGLES, SUPPORTS AND GUIDES:

Seat angles for grating and supports for floor plates shall be set so that they are flush with the floor and also maintain the grating and floor plates flush with the floor.

C. POWER DRIVEN PINS:

Power driven pins shall be set by a craftsman who is certified by the manufacturer. Pins shall be driven in one initial movement by an instantaneous force that has been selected to attain the required penetration. Driven pins shall conform to the following:

Material penetrated by pin	Penetrated material's minimum thickness	Penetration of pin's shank in supporting material	Minimum space from center of pin's shank to edge of penetrated material	Minimum pin spacing
Concrete	16D	6D minimum	14D	20D
Steel	1/4 inch plus 2D	Steel thickness	4D	7D

Where D = pin shank diameter.

When required by the Engineer, pullout tests shall be carried out by the Contractor to prove the effectiveness of the anchorage and the capacity of the pin.

D. COVER PLATES:

Cover plates shall be field measured for proper cutouts and proper sizes. Field welding of aluminum cover plates, where specified, shall be in accordance with ASCE Vol. 88-ST6.

E. LADDERS:

Ladders shall be fitted accurately and field measured where necessary.

F. SAFETY STAIR NOSINGS:

Unless otherwise specified, safety stair nosings shall be installed on all concrete stairs. Nosings shall be secured to concrete with suitable anchors at 15 inches on centers and not more than 4 inches from the ends. Rubber tape, 1/8 inch thick, shall be provided at both ends and cut to fit shape of tread prior to concrete placement.

3.02 CLEANING

After installation, damaged surfaces of shop primed metals shall be cleaned and touched up with the same material used for the shop coat. Damaged surfaces of galvanized metals shall be repaired as specified in Section 09900.

END OF SECTION

SECTION 05501

ANCHOR BOLTS

PART 1--GENERAL

1.01 DESCRIPTION

This section specifies anchor bolts complete with washers and nuts. Unless otherwise specified or indicated, provide type 316 stainless steel.

1.02 REFERENCES

This section contains references to the following documents. They are a part of this section as specified and modified. Where a referenced document contains references to other standards, those documents are included as references under this section as if referenced directly. In the event of conflict between the requirements of this section and those of the listed documents, the requirements of this section shall prevail.

Unless otherwise specified, references to documents shall mean the documents in effect at the time of Advertisement for Bids or Invitation to Bid (or on the effective date of the Agreement if there were no Bids). If referenced documents have been discontinued by the issuing organization, references to those documents shall mean the replacement documents issued or otherwise identified by that organization or, if there are no replacement documents, the last version of the document before it was discontinued. Where document dates are given in the following listing, references to those documents shall mean the specific document version associated with that date, regardless of whether the document has been superseded by a version with a later date, discontinued or replaced.

Reference	Title
ANSI A58.1	Minimum Design Loads for Buildings and Other Structures
ASTM A36/A36M	Structural Steel
ASTM A307	Carbon Steel Bolts and Studs, 60,000 psi Tensile Strength
ASTM A320/A320M	Alloy-Steel Bolting Materials for Low Temperature Service

PART 2--PRODUCTS

2.01 GENERAL

Anchor bolt holes in equipment support frames shall not exceed the bolt diameters by more than 25 percent, up to a limiting maximum oversizing of 1/4 inch. Unless otherwise specified, minimum anchor bolt diameter shall be 1/2 inch. Anchor bolts for equipment mounting and vibration isolation systems shall be provided as specified in Sections 11002 and 11020, respectively.

Tapered washers shall be provided where mating surface is not square with the nut.

Expansion anchors, wedge anchors, or adhesive anchors set in holes drilled in the concrete after the concrete is placed will not be permitted in substitution for anchor bolts except where otherwise indicated or specified. Upset threads shall not be acceptable.

Use of adhesive anchors shall be subject to the following conditions:

1. Use shall be limited to locations where exposure, on an intermittent or continuous basis, to acid concentrations higher than 10 percent, to chlorine gas, or to machine or diesel oils, is extremely unlikely.

2. Use shall be limited to applications where exposure to fire or exposure to concrete or rod temperature above 120 degrees F is extremely unlikely. Overhead applications (such as pipe supports) because of the above concerns, shall be disallowed.

3. Approval from Engineer for specific application.

Use of expansion anchors or wedge anchors shall be subject to the following conditions:

1. Use shall be limited to locations where anchors are not normally submerged or normally within 2 feet of a water surface.

2. Use shall not be allowed at locations where anchors are utilized to anchor equipment that exhibits excessive dynamic movement such as fans.

3. Approval from Engineer for specific application.

At locations where either expansion anchors, wedge anchors or adhesive anchors are acceptable as defined by this specifications, utilize adhesive anchors.

2.02 MATERIALS

Anchor bolt materials shall be as specified in Table A.

Table A, Anchor Bolt Materials

Material	Specification
Steel bolts	ASTM A307, Grade A
Fabricated steel bolts	ASTM A36
Stainless steel bolts, nuts, washers	ASTM A320, Type 316
Expansion anchors	HILTI HDI, ITW Ramset/Red Head Multi-Set II, or equal
Wedge anchors	HILTI KWIT-BOLT, ITW Ramset/Red Head Trubolt, or equal.
Adhesive anchors	HILTI-HIT RE 500, ITW Ramset/Red Head Epson C6, or equal

2.03 PRODUCT DATA

The following information shall be provided in accordance with Section 01300 for all bolt systems not cast-in-place:

1. Data indicating load capacities.
2. Chemical resistance;
3. Temperature limitations;
4. Installation instructions.

PART 3--EXECUTION

3.01 GENERAL

Fieldwork, including cutting and threading, shall not be permitted on galvanized items. Dissimilar metals shall be protected from galvanic corrosion by means of pressure tapes, coatings or isolators. Grouting of anchor bolts with nonshrink or epoxy grouts, where specified, shall be in accordance with Section 03600.

3.02 CAST-IN-PLACE ANCHOR BOLTS

Anchor bolts to be embedded in concrete shall be placed accurately and held in correct position while the concrete is placed or, if specified, recesses or blockouts shall be formed in the concrete and the metalwork shall be grouted in place in accordance with Section 03300. The surfaces of metalwork in contact with concrete shall be thoroughly cleaned.

After anchor bolts have been embedded, their threads shall be protected by grease and the nuts run on.

3.03 ADHESIVE ANCHORS

Adhesive anchors shall be subject to the following conditions:

1. Anchor diameter and grade of steel shall be per contract documents or per equipment supplier specifications. Anchor shall be threaded or deformed full length of embedment and shall be free of rust, scale, grease, and oils.

2. Embedment depth shall be as specified.

3. All installation recommendations by the anchor system manufacturer shall be followed carefully, including maximum hole diameter.

4. Holes shall have rough surfaces, such as can be achieved using a rotary percussion drill.

5. Holes shall be blown clean with compressed air and be free of dust or standing water prior to installation.

6. Anchor shall be left undisturbed and unloaded for full adhesive curing period.

7. Concrete temperature (not air temperature) shall be compatible with curing requirements of adhesives per adhesive manufacturer. Anchors shall not be placed in concrete below 25 degrees F.

3.04 EXPANSION ANCHORS

Expansion anchors or wedge anchors shall be subject to the following conditions:

1. Anchor diameter and grade of steel shall be per contract documents or per equipment supplier specifications. Anchor shall be threaded or deformed full length of embedment and shall be free of rust, scale, grease, and oils.

2. Embedment depth shall be as specified.

3. All installation recommendations by the anchor system manufacturer shall be followed carefully, including maximum hole diameter.

4. Holes shall have rough surfaces, such as can be achieved using a rotary percussion drill.

5. Holes shall be blown clean with compressed air and be free of dust or standing water prior to installation.

END OF SECTION

SECTION 05520

ALUMINUM HANDRAILS AND GUARDRAILS

PART 1—GENERAL

1.01 DESCRIPTION

This section specifies component type aluminum handrails and guardrails. In lieu of a component type aluminum handrail or guardrail, an all welded system may be provided.

1.02 QUALITY ASSURANCE

A. GENERAL:

Handrailing shall conform to the standards of the Occupational Safety and Health Administration (OSHA), the International Building Code (latest edition) and the Drawings. Where there is difference in the requirements between the aforementioned, the more stringent shall apply.

B. REFERENCES:

This section contains references to the following documents. They are a part of this section as specified and modified. Where a referenced document contains references to other standards, those documents are included as references under this section as if referenced directly. In the event of conflict between the requirements of this section and those of the listed documents, the requirements of this section shall prevail.

Unless otherwise specified, references to documents shall mean the documents in effect at the time of Advertisement for Bids or Invitation to Bid (or on the effective date of the Agreement if there were no Bids). If referenced documents have been discontinued by the issuing organization, references to those documents shall mean the replacement documents issued or otherwise identified by that organization or, if there are no replacement documents, the last version of the document before it was discontinued. Where document dates are given in the following listing, references to those documents shall mean the specific document version associated with that date, regardless of whether the document has been superseded by a version with a later date, discontinued or replaced.

Reference	Title
ASTM A320/A320M	Alloy-Steel Bolting Materials for Temperature Service
ASTM B241/B241M	Aluminum and Aluminum-Alloy Seamless Pipe and Seamless Extruded Tube

C. SUBMITTALS:

Submittals shall be made in accordance with Section 01300. In addition, the following specific information shall be provided:

1. Catalog information and catalog cuts.

2. Manufacturer's specifications.

3. Special handling and storage requirements.

4. Installation instructions.

5. Shop drawings:

   a. Railing installation.

   b. Handrail locations and installation.

   c. Post supporting railing: Show all connection details and carrying capacity.

6. Certified Test Reports.

7. Submit samples for approval of color and finish.

8. A copy of this specification section, with addendum updates included, and all referenced and applicable sections, with addendum updates included, with each paragraph check-marked to indicate specification compliance or marked to indicate requested deviations from specification requirements. Check marks (✓) shall denote full compliance with a paragraph as a whole. If deviations from the specifications are indicated, and therefore requested by the Contractor, each deviation shall be underlined and denoted by a number in the margin to the right of the identified paragraph, referenced to a detailed written explanation of the reasons for requesting the deviation. The Engineer shall be the final authority for determining acceptability of requested deviations. The remaining portions of the paragraph not underlined will signify compliance on the part of the Contractor with the specifications. Failure to include a copy of the marked-up specification sections, along with justification(s) for any requested deviations to the specification requirements, with the submittal shall be sufficient cause for rejection of the entire submittal with no further consideration.

D. DELIVERY, STORAGE AND HANDLING:

Materials shall be shipped from the manufacturer's plant banded and skidded, with exposed edges protected by cardboard to prevent damage in shipment.

E. WARRANTY:

Provide a warranty against defective materials and workmanship in accordance with Section 01300.

PART 2—PRODUCTS

2.01 MATERIALS

Material	Component
Aluminum	ASTM B241, Alloy 6061-T6 or 6063-T6
Bolts, nuts and washers	ASTM A320, Type 304 or 305

2.02 FABRICATION

A. GENERAL:

Pipe cuts shall be clean, straight, square and accurate for minimum joint gap. Work shall be done in conformance with the handrail manufacturer's instructions. Work shall be free from blemishes, defects, and misfits of any type which can affect durability, strength, or appearance.

Handrailing and guardrailing components shall be connected by stainless steel screws or bolts. Connections that are pop-riveted or glued will not be acceptable. Whenever needed because of the thickness of the metal, holes shall be subpunched and reamed or drilled. Components with mismatched holes shall be replaced. No drifting of bolts or enlargement of holes will be allowed to correct misalignment. Fitting for rail connections shall flush fit, internally connected to the pipe sections and shall be machined of solid aluminum stock or machined casting of high-tensile aluminum magnesium alloy.

All anchor bolts shall be stainless steel.

B. ALUMINUM HANDRAILS AND GUARDRAILS:

Aluminum handrails and guardrails shall be TUFrail as manufactured by Thompson Fabricating Company (Birmingham, Alabama), Interna-Rail as manufactured by Hollender Manufacturer Company (Cincinnati, Ohio), Connectorail as manufactured by Julius Blum and Company; or equal.

Aluminum railing components shall have a clear satin anodized architectural Class I finish of minimum 0.7 mil thickness. Rails, posts, stanchions, and specials shall be fabricated from 1 1/2-inch diameter, Schedule 40 (minimum) cylindrical sections.

Toeboards shall be provided where specified on the drawings. Toeboards shall be aluminum with a minimum thickness of 3/16 inch and shall be bolted to the vertical railing supports. Toeboards shall be designed to allow for thermal contraction and expansion.

PART 3—EXECUTION

Handrailing and guardrailing shall be as specified on the Drawings. Measurements for railings shall be field-verified before fabrication.

Provide weep holes or other measures to drain water from the railing system, at low points of vertical bends in rails, and in posts at the lowest functional elevation.

Dissimilar metals shall be protected from galvanic corrosion by means of pressure tapes, coatings, or isolators. Aluminum in contact with concrete or grout shall be protected with a heavy coat of bituminous paint.

Metal to be embedded in concrete shall be placed accurately and held in correct position while the concrete is placed. Recesses or blockouts shall be formed in the concrete, and the metalwork shall be grouted in place after concrete has attained its design strength in accordance with Section 03300.

END OF SECTION

SECTION 05530

GRATING

PART 1—GENERAL

1.01 DESCRIPTION

This section specifies floor grating and grating stair treads. Unless otherwise indicated on drawings, floor grating and stair grating treads shall be aluminum. Steel grating and aluminum plank grating shall only be used where indicated on the drawings.

1.02 SUBMITTALS

The following submittals shall be provided in accordance with Section 01300:

1. Catalog data which demonstrate compliance with this specification.

2. Shop drawings that show complete dimensional information, details of construction, anchor detail and installation details. Dimensions shall be based on actual field dimensions to assure proper fit.

3. A copy of this specification section, with addendum updates included, and all referenced and applicable sections, with addendum updates included, with each paragraph check-marked (✓) to indicate specification compliance or marked to indicate requested deviations from specification requirements. Check marks shall denote full compliance with a paragraph as a whole. If deviations from the specifications are indicated, and therefore requested by the Contractor, each deviation shall be underlined and denoted by a number in the margin to the right of the identified paragraph, referenced to a detailed written explanation of the reasons for requesting the deviation. The remaining portions of the paragraph not underlined will signify compliance on the part of the Contractor with the specifications. Failure to include a copy of the marked-up specification sections, along with justification(s) for any requested deviations to the specification requirements, with the submittal shall be sufficient cause for rejection of the entire submittal with no further consideration.

1.03 REFERENCES

This section contains references to the following documents. They are a part of this section as specified and modified. Where a referenced document contains references to other standards, those documents are included as references under this section as if referenced directly. In the event of conflict between the requirements of this section and those of the listed documents, the requirements of this section shall prevail.

Unless otherwise specified, references to documents shall mean the documents in effect at the time of Advertisement for Bids or Invitation to Bid (or on the effective date of the Agreement if there were no Bids). If referenced documents have been discontinued by the

issuing organization, references to those documents shall mean the replacement documents issued or otherwise identified by that organization or, if there are no replacement documents, the last version of the document before it was discontinued. Where document dates are given in the following listing, references to those documents shall mean the specific document version associated with that date, regardless of whether the document has been superseded by a version with a later date, discontinued or replaced.

Reference	Title
ANSI/NAAMM MBG 531	Metal Bar Grating Manual
ANSI/NAAMM MBG 532	Heavy Duty Metal Bar Grating Manual
ASTM B221	Standard Specification for Aluminum and Aluminum-Alloy Extruded Bars, Rods, Wire, Profiles, and Tubes
ASTM A36	Standard Specification for Carbon Structural Steel
ASTM A167	Standard Specification for Stainless and Heat-Resisting Chromium-Nickel Steel Plate, Sheet, and Strip

PART 2—PRODUCTS

2.01 MATERIALS

A. ALUMINUM BAR GRATING:

Aluminum grating bearing bars shall be of alloy 6061-T6 conforming to ASTM B221 with the top having a striated surface. Aluminum grating cross bars shall be of an alloy conforming to either ASTM B221 (extrusions) or B210 (drawn). Bearing bars shall be punched to receive the cross bars. After insertion in the bearing bars, cross bars shall be deformed by a hydraulic press or similar means to permanently lock the bars into the bearing bar openings. Fabrication methods employing bending or notching of bearing or cross bars will not be permitted. Finish shall be mill.

Grating shall be able to carry a uniform load of 100 pounds per square foot with a deflection not exceeding ¼ inch. Bearing bar size shall not be less than indicated on the drawings.

B. ALUMINUM PLANK GRATING:

Aluminum plank grating shall be extruded from alloy 6063-T6 conforming to ASTM B221. Unless specifically indicated otherwise, plank top shall be solid except for slotted holes allowing access to anchors that connect the plank grating to the supports. Top surface shall be unpunched with continuous raised longitudinal ridges for skid resistance. Finish shall be mill.

Plank grating shall be able to carry a uniform load of 100 pounds per square foot with a deflection not exceeding ¼ inch. Plank grating depth shall not be less than indicated on the drawings.

C. HEAVY DUTY STEEL GRATING:

Steel grating bearing bars and cross bars shall be of welding quality mild carbon steel conforming to ASTM A36. Steel grating shall be hot-dip galvanized. Notching, slotting, or cutting

the top or bottom edges of bearing bars to receive cross bars will not be permitted unless each intersection of bars is fully welded to restore each bearing bar to its full cross-sectional strength. Cross bar spacing shall be 4 inches. Heavy duty grating shall have weld lugs shop welded to bearing bars for attachment to supports.

Grating shall be able to carry an AASHTO H20 truck load with a 30% impact factor. Grating depth shall not be less than indicated on the drawings.

D. STAINLESS STEEL GRATING:

Steel grating bearing bars and cross bars shall be of welding quality mild carbon steel conforming to ASTM A167.

E. EXTRUDED ALUMINUM GRATING SUPPORTS:

Aluminum frames shall be extruded from alloy 6063-T6. Aluminum frame shall be same manufacturer as grating. Frame profile shall incorporate both a continuous anchor when cast into concrete and a continuous lip for aluminum anchors that clamp the grating to the frame. Frame finish shall be mill. Frame anchor shall be not protrude above top of grating. Frame hardware shall be stainless steel.

2.02 FABRICATION

A. GENERAL:

Both bearing bars and cross bars shall be continuous.

All grating shall be end banded with bars the same thickness of the bearing bars except at I-bar bearing bars where the thickness shall be 1/8 inch minimum. End banding shall be the height of the bearing bar minus ¼ inch with the top of the end banding level with the top of the bearing bars. At heavy duty grating, the end banding shall be welded to every bearing bar. At non-heavy duty grating, the end banding may be welded to alternate bearing bars so as not exceed a spacing of 5 inches.

Rough weld beads and sharp metal edges on gratings shall be ground smooth. Welds exposed to view shall be uniform and neat. Welds to be galvanized shall be sandblasted prior to galvanizing.

Grating shall bear a minimum of 1 inch on supports except for heavy duty steel grating which shall bear a minimum of 2 inches on supports.

No single piece of grating shall weigh more than 80 pounds unless specifically detailed otherwise.

Cutouts for circular obstructions shall be 2 inches minimum, 3 inches maximum, larger in diameter than obstruction. All openings shall be banded with bars having the same dimensions as the bearing bars except where only one bearing bar is cut. Bar shall be welded to each bearing bar cut at opening. Cutouts shall not cut more than 40% of the bearing bars in a grating panel.

Each section of grating shall be anchored to supports with a minimum of four anchors, two per end, approximately 6 inches from each side. All anchoring systems shall not protrude above the top of the grating except for saddle clips. Anchoring by welding shall not be acceptable. Anchors for heavy duty grating shall be by means of welding lugs. Anchors for other bar type gratings shall be with 316 stainless steel saddle clips. Anchors for aluminum plank grating shall be of aluminum construction made specifically for such grating. Bolts utilized in all anchors shall be minimum ¼ inch diameter, 316 stainless steel.

PART 3—EXECUTION

3.01 INSTALLATION

A. GENERAL:

Installation shall be in accordance with shop drawings and ANSI 531 and ANSI 532, as applicable and the additional items in this section.

Fieldwork shall not be permitted on galvanized items. Drilling of bolts or enlargement of holes to correct misalignment will not be allowed.

Dissimilar metals shall be protected from galvanic corrosion by means of pressure tapes, coatings or isolators. Aluminum in contact with concrete shall be protected by a coat of bituminous paint.

Metalwork to be embedded in concrete shall be placed accurately and held in correct position while the concrete is placed or, if specified, recesses or blockouts shall be formed in the concrete after it has attained its design strength and the metalwork grouted in place as specified in Section 03300. The surfaces of metalwork in contact with or embedded in concrete shall be thoroughly cleaned, and if of aluminum construction, coated with bituminous paint.

Grating shall be field measured for proper cutouts and proper sizes.

3.02 CLEANING

After installation, damaged surfaces of shop primed metals shall be cleaned and touched up with the same material used for the shop coat. Damaged surfaces of galvanized metals shall be repaired as specified in Section 05910.

END OF SECTION

SECTION 06100

ROUGH CARPENTRY

PART 1 - GENERAL

1.1 SUMMARY:

A. Related work specified elsewhere:
1. Concrete formwork.
2. Custom cabinets.
3. Gypsum board.
4. Toilet partitions and accessories.

1.2 SUBMITTALS:

A. Preservative-treated wood certification: Submit for Architect's information only. Submit certification by treating plant, stating chemicals and process used, net amount of salts retained, conformance with applicable standards and moisture content after treatment.

B. Fire-retardant treatment certification: Submit for Architect's information only. Submit certification by treating plant that fire-retardant treatment materials comply with governing ordinances and that treatment will not bleed through finished surfaces.

1.3 QUALITY ASSURANCE:

A. Applicable standards:
1. ASTM International (ASTM), standards as referenced herein.
2. Wood products; comply with the following standards published by the U. S. Department of Commerce, National Bureau of Standards:
   a. Lumber: PS 20-10.
   b. Construction and Industrial Plywood: PS 1-95.
3. Preservative-treated wood: American Wood Protection Association (AWPA); current standards, as referenced herein, shall apply to preservative-treated wood products.
4. Plywood: APA The Engineered Wood Association (APA), current standards.
5. Grading rules; current grading rules of the following associations apply as applicable to wood products:
   a. Southern Pine Inspection Bureau (SPIB).
   b. Western Wood Products Association (WWPA).
   c. West Coast Lumber Inspection Bureau (WCLIB).
   d. National Lumber Grades Authority (NLGA).

B. Design standards; spans, connections and design criteria for members not otherwise indicated shall comply with the following:
1. American Institute of Timber Construction (AITC), "Timber Construction Manual."

2. American Forest and Paper Association (AF&PA).
   a. "National Design Specifications for Wood Construction".
   b. "Design Values for Joists and Rafters".
   c. "Span Tables for Joists and Rafters".

C. Product identification:
1. Lumber: Lumber shall bear the grade stamp of a listed grading rules association certified by the Board of Review of the American Lumber Standards Committee (ALSC), identifying species or species combination, grade, moisture condition at time of surfacing, mill of origin and grading agency.
2. Plywood: Plywood shall bear the stamp of the APA The Engineered Wood Association (APA), indicating type, grade, thickness, exposure durability, span rating, agency compliance, species group, edging, finish and glue type.
3. Preservative-treated wood products: Preservative-treated lumber and plywood shall bear the quality standard stamp of the applicator, indicating preservative type, exposure conditions, year of treatment, treatment plant and treatment supervising agency.
4. Fire-retardant-treated wood products: Fire-retardant-treated lumber and plywood shall bear the stamp of Underwriters Laboratories, Inc., (UL) or other approved independent inspection agency, indicating treatment type or name, flame spread and treatment plant.

1.4 DELIVERY, STORAGE AND HANDLING:

A. Upon delivery to project site, place materials in areas protected from weather.

B. Store materials a minimum of 6" above ground on blocking and cover with waterproof covering. Provide for air circulation and ventilation.

C. Store no seasoned materials in wet or damp portions of building.

D. Protect sheet materials from breaking corners and damaging surfaces.

PART 2 - PRODUCTS

2.1 LUMBER:

A. Species and standards: Grade-stamped commercial softwood conforming to PS 20 and referenced grading rules, unless otherwise indicated.

B. Seasoning: 19% maximum moisture content at time of building enclosure, unless otherwise noted.

C. Surfacing: Surfaced four sides (S4S).

D. Dimensions: Indicated lumber dimensions are nominal. Comply with PS 20.

E. Plates, blocking, bracing and nailers: Utility Grade or #3 Southern Pine.

2.2 SHEET MATERIALS:

A. Engineered Wood Products, General: Products shall contain no urea formaldehyde.

B. Plywood:
1. Interior wall surfaces: APA C-D, Interior Group 1 where exposed one side, thickness indicated.
5. Where indicated, provide fire-retardant-treated plywood meeting AWPA U1-07, T1-07 and P17-02, Treatment A.

2.3 TREATED WOOD PRODUCTS:

A. Pressure-preservative-treated wood:
1. Treatment type: Water-borne preservative registered with EPA.
2. AWPA standard:
a. Lumber, timber and plywood shall conform to applicable requirements of AWPA Standard U1-07 and T1-07 for species, product and end use.
b. Handling and care of pressure treated wood products shall conform to AWPA Standard M4-06.
c. Preservatives shall conform to AWPA P5-07.
3. Preservative retention: As required by treatment type in accord with AWPA Standards for below- or above-ground use.
4. Seasoning; re-dry after treatment to 19% maximum moisture content.
5. Use:
a. Wood products in contact with concrete slabs-on-grade or foundations.
b. Nailers or blocking cast or built into concrete or masonry.
c. Wood products in contact with exterior walls.
d. Blocking, nailers, plates and similar wood products in conjunction with roof decks, roofing and roof parapets.

B. Interior fire-retardant-treated wood:
1. Acceptable product; subject to compliance with specified requirements:
a. Chemical Specialties, Inc., D-Blaze.
b. Hickson Corporation, Dricon.
c. Hoover Treated Wood Products, Pyro-Guard.
2. Description: Pressure-impregnated with a chemical retardant tested and listed by Underwriters Laboratories, Inc., (UL). When tested in accord with ASTM E84-09 treated products shall have a flame spread of 25 or less and show no evidence of significant progressive combustion when the test is continued for an additional twenty minute period. In addition, flame front shall not progress more than 10'-6" beyond centerline of burners at any time during test.
3. Surface burning characteristics: F.R.-S rating in accord with Underwriters Laboratories, Inc. (UL).
4. AWPA standard: AWPA U1-07, T1-07 and P17-02.

5. Seasoning; kiln-dried after treatment to the following maximum moisture content:
   a. Lumber: 19%.
   b. Plywood: 15%.
6. Hygroscopicity: Maximum 28% equilibrium moisture content when tested in accord with ASTM D3201-08a at 92% relative humidity.
7. Use: As required by codes.

2.4 HARDWARE:

A. Provide nails, bolts, nuts, washers, screws, expansion bolts, clips, powder-actuated fasteners and similar hardware necessary for complete installation of rough carpentry items.
   1. Material and finish of fasteners in contact with non-pressure treated and fire-retardant-treated components shall be G90 hot dip galvanized steel or Type 304 stainless steel, except nails shall be hot dip galvanized.
   2. Material and finish of fasteners in contact with pressure-preservative-treated components shall be one of the following:
      a. G185 hot-dip galvanized steel.
      b. Type 316L stainless steel.

2.5 ADHESIVES:

A. Adhesives for gluing furring and sleepers to concrete or masonry: Formulation complying with ASTM D 3498 that is approved for use indicated by adhesive manufacturer.
   Adhesives shall have a VOC content of 70 g/L or less when calculated according to 40 CFR 59, Subpart D (EPA Method 24).

B. Water-repellent preservative: NWWDA-tested and -accepted formulation containing 3-iodo-2-propynyl butyl carbamate, combined with an insecticide containing chloropyrifos as its active ingredient.

PART 3 - EXECUTION

3.1 WORKMANSHIP:

A. Install wood framing and rough carpentry work cut square on bearings, fitted and set to required lines and levels, and secured in place.

B. Lay out the work to provide correct openings to receive work of other trades.

C. Preservative-treated wood:
   1. Prior to installation, brush-apply preservative to cut edges and ends of wood, using same type of preservative used for pressure treatment.
   2. Handle and install in accord with AWPA standards.

D. Fire-retardant-treated wood:

1. Prevent exposure to water or moisture, and do not use if so exposed.
2. Only end cuts shall be made. Do not rip or re-surface.
3. Attach using only hot dip galvanized nails and anchors.

E. Plates, blocking, nailers and miscellaneous framing:
1. Provide 2" nominal thickness members to support and secure finishing materials, fixtures, accessories, partitions, specialty items and trim.
2. Bolt to structural steel or metal framing at 4'-0" o. c., maximum.
3. Secure to concrete and masonry using cast-in bolts, powder-activated stud, sleeve or wedge type anchors spaced at 4'-0" o. c., maximum.
4. Provide anchors within 3" of ends of members.
5. Provide linear runs in maximum practicable lengths, with joints in multiple members offset 3'-0", minimum.
6. Around roof perimeter and at roof penetrations, provide blocking equal to roof insulation thickness. Attach through decking into structural members at 2'-0" o. c., maximum, starting within 3" of each end. Space ends 1/2" for venting.
7. Install furring vertically at 2'-0" o. c., maximum. Secure to concrete or masonry with adhesive and appropriate fasteners spaced at 2'-0" o. c., maximum.

F. Site tolerances:
1. Variation from plumb: 1/4" in 10'-0" height, non-cumulative,
2. Variation from horizontal squaring diagonals: 1/2".
3. Variation from indicated location of framing: ± 1/4".
4. Location of dimensioned openings: ± 3/8".
5. Variation from indicated rough opening size: +1/4", -1/8".

3.2 SHEET MATERIAL INSTALLATION:

A. Interior plywood equipment backboards: Install over interior studs in full height sheets, with tight butted joints. Sand joints if required to obtain joints without offsets.

END OF SECTION

SECTION 06410

CUSTOM CABINETS

PART 1 - GENERAL

1.1 SUMMARY:

A. Work of this section includes factory-fabricated custom cabinets.

B. Related work:
1. Rough carpentry.
2. Solid surfacing fabrications.

1.2 SUBMITTALS:

A. Shop drawings: Submit for custom cabinets. Indicate construction and installation details, species and grades of materials, finishes, plastic laminate and cabinet hardware selections.

B. Product data: Submit for cabinet hardware and similar manufactured items. Submit with shop drawings.

C. Samples; submit as follows:
1. Plastic laminate: Manufacturer's standard color and pattern selections for selection by Architect.
2. Hardware items: Submit if requested by Architect. Samples will be returned to supplier.

1.3 QUALITY ASSURANCE:

A. Applicable standards; comply with the following:
1. Standards of the following, as referenced herein:
   a. American National Standards Institute (ANSI).
   b. APA The Engineered Wood Association (APA).
   c. ASTM International (ASTM).
   d. American Wood Protection Association (AWPA).
   e. Forest Stewardship Council (FSC).
   f. Hardwood Plywood and Veneer Association (HPVA).
   g. National Electric Manufacturers Association (NEMA).
   h. National Fire Protection Association (NFPA).
   i. Underwriters Laboratories, Inc., (UL).
2. Wood products; standards of the U. S. Department of Commerce, National Institute of Standards and Testing:
   a. Lumber: PS 20-10.
   b. Construction and Industrial Plywood: PS 1-95.
3. Standards: Architectural Woodwork Institute (AWI), "Architectural Woodwork Quality Standards, Guide Specifications and Quality Certification Program," 2005 Edition, herein referred to as AWI Standards. Work shall comply with applicable portions of AWI standards.

B. Grade marks: Identify lumber and plywood by official grade mark.
   1. Lumber: Grade stamp shall contain symbol of grading agency, mill number or name, grade of lumber, species or species grouping or combination designation, rules under which graded where applicable, and condition of seasoning at time of manufacture.
   2. Plywood: Appropriate grade trademark of the APA. Indicate type, grade, class, identification index and inspection and testing agency mark.
   3. On components to be exposed to view, grade marks shall be located so as to be concealed in finished work.

C. Fabricator/installer qualifications:
   1. Custom cabinets shall be fabricated and installed by a single manufacturer.
   2. Fabricator/installer shall have at least five years successful experience in the fabrication, finishing and installation of custom cabinets of the type and quantity required and, if requested by Architect, shall submit evidence of such experience.

D. Pre-installation conference:
   1. Prior to beginning work, a pre-installation conference will be held to review work to be accomplished.
   2. Contractor, fabricator/installer and Architect shall be present.
   3. Contractor's submittals will be reviewed.
   4. Substrates and conditions under which custom cabinets shall be installed will be reviewed.
   5. Contractor shall notify all parties at least seven days prior to time of conference.
   6. Contractor shall record minutes of meeting and distribute to all parties in attendance.

E. Mock-up:
   1. Erect a full size mock-up of custom cabinet work at project site for Architect's acceptance. If unacceptable, erect additional mock-ups until acceptable.
   2. Mock-up shall indicate the following:
      a. Workmanship.
      b. Finishes.
      c. Relationships to adjacent work.
      d. Do not begin custom cabinet production until each mock-up has been accepted by Architect.
      3. Accepted, undamaged mock-up may remain as part of the finished work.

1.4 DELIVERY, STORAGE AND HANDLING:

A. Deliver no custom cabinets to project site until areas are ready for custom cabinets installation.

B. Immediately upon delivery to job site, place custom cabinets indoors, protected from weather.

C. Store custom cabinets a minimum of 6" above floor on blocking and cover with waterproof covering. Provide for air circulation and ventilation. Store in dry, conditioned space.

D. Wrap prefinished custom cabinets in protective covering for shipping and storage. Protect from sunlight exposure.

1.5 PROJECT CONDITIONS:

A. Field measurements: Take field measurements to ascertain exact custom cabinets sizes. Indicate exact dimensions on shop drawings.

B. Install no interior custom cabinets until spaces are enclosed, dry and conditioned. Maintain temperature between 55 degrees F. and 80 degrees F. for 72 hours before beginning installation and afterwards until Date of Substantial Completion.

C. Maintain interior relative humidity at the site between 25% and 55% before, during, and after installation.

PART 2 - PRODUCTS

2.1 BASIC MATERIALS:

A. Veneer-faced hardwood plywood:
1. Meeting HPVA HP-1 and AWPA P17-02. Plywood shall be made without urea-formaldehyde adhesive.
2. Plywood shall conform to AWI Quality Standards for millwork grade specified.

Medium-density fiberboard (MDF): Meeting ANSI A208.2; Grade 130; Class "C" fire hazard classification for 3/4" thickness. MDF shall be made with binder containing no urea formaldehyde.

C. Hardboard: AHA A135.4, 1/4" thickness, tempered.

D. Plastic laminates:
1. Acceptable products:
a. Formica Corp., Formica.
b. Panolam Industries, Nevamar.
c. Wilsonart International, Inc., Wilsonart.
2. Conforming to NEMA Standard LD3-2005, as follows:
a. Horizontal applications: Grade HGS.
b. Vertical applications: Grade VGS.
c. Backing sheet: Grade BKH, undecorated plastic laminate.
d. Post-forming applications: Grade VGP.

e. Chemical resistant applications: Grade VGP.
f. Fire-resistant applications: Grade HGF.
g. Solid color applications: Grade HGS.

3. Colors, textures and patterns: As selected by Architect from manufacturer's premium color range.
4. Provide abuse-resistant laminates for exposed portions of the work.

2.2 ARCHITECTURAL CABINETS:

A. Architectural cabinets shall comply with AWI Standards, Section 400.

B. Plastic laminate clad cabinets:
1. AWI quality grade: Custom.
2. Panel core:
a. Counter tops, cabinet bodies and shelves: Hardwood plywood.
b. Doors: Medium-density fiberboard (MDF).
3. Finish on exposed surfaces: Plastic laminate as specified herein.
4. Finish on semi-exposed surfaces: Plastic laminate.
5. Component edges: Plastic laminate faced.

C. Tops:
1. Plastic laminate:
a. AWI quality grade; Custom.
b. Exposed surfaces: Plastic laminate.
c. Core: Plywood.
d. Non-exposed surface: Backing sheet.
2. Solid surfacing: As specified in Solid Surfacing Fabrications section.

2.3 HARDWARE:

A. Door and drawer pulls:
1. Acceptable products:
a. Epco, Inc., #MC-402/2-4.
b. Sugatsune America, Inc., #SST-30M.
c. Stanley Works #4484, 4" long.
2. Type: 4" long wire pull, US32 (stainless steel bright).

B. Concealed hinges:
1. Acceptable products:
a. Grass America, Inc., #3903.
b. Julius Blum, Inc., #71.6500 Series.
c. Sugatsune America, Inc., #H160-C.
2. Type: 165 degree opening, self-closing.

C. Recessed shelf standards and supports:
1. Acceptable manufacturers:
a. Basis of design: Knape and Vogt Mfg. Co., #255 standard with #256 support.
b. Stanley Works.
c. Johnson Hardware, Inc.

d. Sugatsune America, Inc.
e. Hafele America Co.
2. Type: Steel.
3. Finish: Finish as selected by Architect.

D. Side mount drawer slides:
1. Acceptable products:
a. Basis of design: Accuride, #3832.
b. Grant Hardware Co., #5632.
c. Knape and Vogt Mfg. Co., #1429.
2. Type: Full extension, steel ball bearing.
3. Capacity: 100 lb. capacity:

E. Cabinet drawer/door lock:
1. Acceptable products:
a. Knape and Vogt Mfg. Co., #986.
b. Sugatsune America, Inc., #3310.
c. Timberline Supply, Ltd., Style CB-230 deadlock and Type 230 cylinder body with lock plug.
2. Finish: Nickel-plated.

F. Wire management grommet:
1. Acceptable products:
a. Outwater Plastics, Inc., #31-2".
b. Sugatsune America, Inc., #V60-B.
c. Hafele America, Inc.
2. Provide set including grommet, grommet cap and slot cover; color as selected by Architect from manufacturer's standard selection.

G. Fasteners: Provide bolts, nails, screws, toggle bolts and similar fasteners as indicated or required to attach and secure work.
1. Fasteners for trim shall be finishing nails for attachment to wood framing, trim-head screws for attachment to metal framing.
2. Material and finish of fasteners in contact with non-pressure treated and fire-retardant-treated components shall be G90 hot dip galvanized steel or Type 304 stainless steel, except nails shall be hot dip galvanized.
3. Material and finish of fasteners in contact with for pressure-treated components shall be G185 hot-dip galvanized steel or Type 316L stainless steel.

2.4 ADHESIVES:

A. Adhesives, general: Adhesives shall not contain urea formaldehyde.
VOC limits for installation adhesives: Installation adhesives shall comply with the following limits for VOC content when calculated according to 40 CFR 59, Subpart D (EPA Method 24):
Wood glues: 30 g/L.
2. Multipurpose construction adhesives: 70 g/L.
3. Contact adhesive: 250 g/L.

Adhesive for bonding plastic laminate: Acceptable types include unpigmented contact cement, contact cement, PVA, urea formaldehyde and resorcinol.

b. Adhesive for bonding edges: Hot-melt adhesive or adhesive specified above for faces.

2.5 FABRICATION:

A. General:

1. Quality grade for custom cabinets shall be AWI Custom Grade.
2. Fabricate custom cabinets in accord with approved shop drawings.
3. Apply laminate backing sheet to reverse side of plastic laminate finished surfaces.
4. Perform veneer operations using hot press method using moisture-resistant, fire-retardant adhesives.
5. Shop-assemble for delivery to site in units easily handled and to permit passage through building openings. Items which cannot be manufactured in one piece shall have joints at logical breaking points and shall be so noted on shop drawings.
6. Apply plastic laminate sheets in full uninterrupted sheets consistent with manufactured sizes. Fit corners and joints hairline; secure with concealed fasteners.
7. Cap exposed plastic laminate finish edges with material of same finish and pattern.
8. When necessary to cut and fit on site, provide materials with ample allowance for cutting. Provide trim for scribing and site cutting.
9. Scribe, miter and accurately join members.
10. Finish work shall be smooth, free from abrasion, tool marks, open joints or raised grain on exposed surfaces.

B. Casework:

1. Fit shelves, doors and exposed edges with plastic laminate edging. Use one piece for full length only.
2. Where countertops can not be provided in single length, join using compression type fasteners.
3. Provide cutouts for plumbing fixtures, inserts, appliances, outlet boxes, fixtures and fittings. Verify locations of cutouts from onsite dimensions. Seal contact surfaces of cut edges.

PART 3 - EXECUTION

3.1 PREPARATION:

A. Prior to pre-installation conference, examine substrates and conditions to receive work. Check that floors and wall substrates are level, plumb and within tolerances to receive work specified in this section.

B. Verify mechanical, electrical and building items affecting work of this section are placed and ready to receive custom cabinets.

C. Do not begin work until unsatisfactory substrates or conditions have been corrected.

3.2 GENERAL WORKMANSHIP:

A. Install custom cabinets in a manner consistent with the specified Quality Grade, plumb, level, true and straight within 1/8" in 10'-0". Shim as required using concealed shims.

B. Secure to grounds, stripping and blocking with countersunk, concealed fasteners and blind nailing.
   1. Use fixture attachments in concealed locations for wall mounted components.
   2. Secure cabinet and counter base to floor using angles and anchorages.

C. Scribe and cut for accurate fit to other finished work, with maximum gap of 1/32". Do not use addition overlay trim to conceal larger gaps.

D. Use concealed joint fasteners to align and secure adjoining cabinet units and countertops.

E. Before making cutouts, drill pilot holes at corners.

F. Finish work shall be smooth, free from abrasion, tool marks, raised grain grade markings or similar defects on exposed surfaces.

G. Distribute defects allowed in the quality grade specified to the best overall advantage when installing job assembled work. Install work in accord with approved shop drawings.

H. Touch up mill finished items, including refinishing necessitated by job fitting or attaching and repair of scratches and similar damages. Touch up repairs shall be indiscernible in the finished work.

3.3 CLEANING AND PROTECTION:

A. Protect finished and prefinished surfaces from work of other trades.

B. Prior to Date of Substantial Completion, examine work for damages. Repair or replace such damaged work to original condition.

C. Clean wood, metal and accessory items using a neutral cleaner. Check and correct operating mechanism for proper operation. Adjust and lubricate hinges, catches and other operating hardware.

END OF SECTION

SECTION 06610

GLASS FIBER AND RESIN FABRICATIONS

PART 1—GENERAL

1.01 DESCRIPTION

This section specifies glass fiber and resin fabrications including FRP (fiberglass reinforced plastic) handrails, guardrails, gratings, structural members and ladders.

1.02 QUALITY ASSURANCE

A. GENERAL:

All glass fiber and resin fabrications shall conform to the standards of the Occupational Safety and Health Administration (OSHA) and the Standard Building Code, whichever is more restrictive.

B. REFERENCES:

This section contains references to the following documents. They are a part of this section as specified and modified. In case of conflict between the requirements of this section and those of the listed documents, the requirements of this section shall prevail.

Reference	Title
ASTM D696	Coefficient of Linear Thermal Expansion of Plastics Between -30 degrees C and 30 degrees C with a Vitreous Silica Dilatometer
ASTM D2344	Short-Beam Strength of Polymer Matrix Composite Materials and Their Laminates
ASTM D638	Test Method for Tensile Properties of Plastics
ASTM D790	Test Method for Flexural Properties of Unreinforced and Reinforced Plastics and Electrical Insulating Materials
ASTM D792	Test Method for Specific Gravity (Relative Density) and Density of Plastics by Displacement
ASTM E84	Test Method for Surface Burning Characteristics of Building Materials

1.03 SUBMITTALS:

The following information shall be provided in accordance with Section 01300 for all FRP fabrications:

1. Shop drawings of all fabricated gratings and accessories in accordance with the provisions of this Section. Shop drawings for manufacturer designed fabrications shall be sealed by a Professional Engineer registered in the state of the project.

2. Manufacturer's published literature including structural design data, structural properties data, grating load/deflection tables, corrosion resistance tables, certificates of compliance, test reports as applicable, concrete anchor systems and their allowable load tables.

3. A copy of this specification section, with addendum updates included, and all referenced and applicable sections, with addendum updates included, with each paragraph check-marked to indicate specification compliance or marked to indicate requested deviations from specification requirements. Check marks (✓) shall denote full compliance with a paragraph as a whole. If deviations from the specifications are indicated, and therefore requested by the Contractor, each deviation shall be underlined and denoted by a number in the margin to the right of the identified paragraph, referenced to a detailed written explanation of the reasons for requesting the deviation. The Engineer shall be the final authority for determining acceptability of requested deviations. The remaining portions of the paragraph not underlined will signify compliance on the part of the Contractor with the specifications. Failure to include a copy of the marked-up specification sections, along with justification(s) for any requested deviations to the specification requirements, with the submittal shall be sufficient cause for rejection of the entire submittal with no further consideration.

PART 2—PRODUCTS

2.01 MATERIALS

A. GENERAL:

Member cuts shall be clean, straight, square and accurate for minimum joint gap. Work shall be done in conformance with the manufacturer's recommendations. Work shall be free from blemishes, defects, and misfits of any type that can affect durability, strength, or appearance.

B. FRP HANDRAILS AND GUARDRAILS:

Fiberglass reinforced pultrusions will be the material for all components. Reinforcing glass will be a minimum of 50 percent by weight.

The resin system shall be an isopolyester resin with a UV stabilizer added. Standard color shall be a safety yellow. A synthetic polyester veil shall be applied to all exposed surfaces except all outdoor exposure surfaces shall receive a polyurethane coating.

Top rail shall be a 1 7/8-inch diameter by 3/16-inch partial round tube. The mid-rail shall be 1 1/2-inch diameter by 3/16-inch round tube. Posts shall be 2-inch by 1/4-inch square tube. Toe plate shall be a 4-inch by 1/8-inch corrugated profile. Toe plates shall be designed to allow for thermal contraction and expansion.

Top rail, mid-rail and toe plate splices shall be located within 18 inches of a post.

Rail and post intersections shall be connected by stainless steel rivets. Toe plate shall be secured to posts with stainless steel bolts.

C. FRP PULTRUDED I-BAR GRATING:

Grating components shall be high strength and high stiffness pultruded elements having a maximum of 70% and a minimum of 60% glass content (by weight) of continuous roving and continuous strand mat fiberglass reinforcements. The finished surface of the product shall be provided with a surfacing veil to provide a resin rich surface which improves corrosion resistance and resistance to ultraviolet degradation. Bearing bars shall be interlocked and epoxied in place with a two piece cross rod system to provide a mechanical and chemical lock.

Grating shall be provided with a quartz grit bonded and baked to the top surface of the finished grating product.

Grating shall be fire retardant with a tested flame spread rating of 25 or less when tested in accordance with ASTM E 84.

The resin system used in the manufacture of the grating shall be isophthalic polyester. Color shall be yellow.

Depth of load bearing bars shall be as required for a uniform 100 pound per square foot live load with a maximum deflection span/180 or 0.375-inches, whichever is less.

Mesh configuration shall be with load bearing bars spaced such that clear space between bars does not exceed 1-inch and shall be with cross bars not exceeding 12-inches on center. Tolerance for both load bearing bars and cross bars shall be plus or minus 1/16" mesh centerline to centerline.

D. MOLDED FRP GRATING:

Grating shall be of a one piece molded construction with tops and bottoms of bearing bars and cross bars in the same plane. Grating shall have a square mesh pattern providing bidirectional strength. Grating shall be reinforced with continuous rovings of equal number of layers in each direction. The top layer of reinforcement shall be no more than 3/16" below the top surface of the grating so as to provide maximum stiffness and prevent resin chipping of unreinforced surfaces. Percentage of glass (by weight) shall not exceed 35% so as to achieve maximum corrosion resistance, and as required to maintain the structural requirements.

After molding, no dry glass fibers shall be visible on any surface of bearing bars or cross bars. All bars shall be smooth and uniform with no evidence of fiber orientation irregularities, interlaminar voids, porosity, resin rich or resin starved areas.

Grating shall be manufactured with a concave profile on the top of each bar providing maximum slip resistance. Secondarily applied grit shall be allowed as long as the top surface does not exceed 1/16".

Grating shall be fire retardant with a tested flame spread rating of 25 or less when tested in accordance with ASTM E 84. Certifications shall be dated within the past two years and test data performed only on the resin shall not be acceptable.

The resin system used in the manufacture of the grating shall be polyester. Color shall be yellow.

Depth shall be as required for a uniform 100 pound per square foot live load with a maximum deflection span/180 or 0.375-inches, whichever is less.

Mesh configuration shall be square with spacing of bars at 1 ½-inches on center with a tolerance of plus or minus 1/16" mesh centerline to centerline.

E. GRATING LEG SUPPORT SYSTEM (MOLDED FRP GRATING ONLY):

Grating leg support system shall be fabricated from vinyl ester components, adjustable for height, and suitable for application. Pedestals shall be 2-inch round tube manufactured by pultrusion process. Pedestal shall have a base plate adequate for application. Tops shall have molded in fittings to fit square mesh grating. Adjustability shall be by threaded 1-inch diameter vinyl ester rods. Number of grating leg supports shall be as required to support a uniform live load of 100 pounds per square foot over the entire grated area.

F. STRUCTURAL SHAPES:

All structural shapes are to be manufactured by the pultrusion process with a glass content minimum of 45%, maximum of 55% by weight for maximum sunlight and chemical resistance. The structural shapes shall be composed of fiberglass reinforcement and resin in qualities, quantities, properties, arrangements and dimensions as necessary to meet the design requirements and dimensions as specified in the Contract Documents.

Fiberglass reinforcement shall be a combination of continuous roving, continuous strand mat, and surfacing veil in sufficient quantities as needed by the application and/or physical properties required.

Resins shall be fire retardant vinyl ester with chemical formulation necessary to provide the corrosion resistance, strength and other physical properties as required.

Pultruded structural shapes are to have the minimum longitudinal mechanical properties listed below:

Property	**ASTM Method**	**Value**	**Units**
Tensile Strength	D-638	30,000 (206)	psi (MPa)
Tensile Modulus	D-638	2.5×10^6 (17.2)	psi (GPa)
Flexural Strength	D-790	30,000 (206)	psi (MPa)
Flexural Modulus	D-790	1.8×10^6 (12.4)	psi (GPa)

Flexural Modulus (Full Section)	N/A	2.8×10^6 (19.3)	psi (GPa)
Short Beam Shear (Transverse)	D-2344	4,500 (31)	psi (MPa)
Shear Modulus (Transverse)	N/A	4.5×10^5 (3.1)	psi (GPa)
Coefficient of Thermal Expansion	D-696	8.0×10^{-6} (1.4×10^{-6})	in/in/°F (cm/cm/°C)
Flame Spread	E-84	25 or less	N/A

G. LADDERS:

All ladder side rails, rungs, ladder mounting brackets and cage straps are to be FRP structural shapes manufactured by the pultrusion process. Cage hoops and brackets shall be produced by the open molded hand lay-up method. All structural shapes shall be composed of fiberglass reinforcement and resin in qualities, quantities, properties, arrangements and dimensions as necessary to meet the design requirements and dimensions as specified in the Contract Documents.

Fiberglass reinforcement shall be a combination of continuous roving, continuous strand mat, bi-directional roving mat and surfacing veil in sufficient quantities as needed by the application and/or physical properties required.

Resins shall be a vinyl ester with chemical formulation necessary to provide the corrosion resistance, strength and other physical properties as required.

All finished surfaces of FRP items and fabrications shall be smooth, resin-rich, free of voids and without dry spots, cracks, crazes or unreinforced areas. All glass fibers shall be well covered with resin to protect against their exposure due to wear or weathering.

All pultruded ladder components shall be further protected from ultraviolet (UV) attack with 1) integral UV inhibitors in the resin and 2) a synthetic surfacing veil to help produce a resin rich surface

All FRP products shall have a tested flame spread rating of 25 or less per ASTM E-84 Tunnel Test.

The ladder side rail shall be 1-3/4" square tube with a wall thickness of 1/4" or greater. The rungs shall be 1-1/4" diameter pultruded structural shapes, continuously fluted to provide a non-slip surface. Rungs that are gritted as a secondary operation shall not be permitted. Ladder wall and floor mount shall be fabricated from pultruded angles, 3/8" minimum thickness.

The ladder cage vertical bars shall be 2" wide by 9/16" pultruded channel shapes to offer protection to workers from exposes hardware. Cage hoops and cage brackets shall be manufactured by the open mold hand lay-up process. Top, intermediate, and bottom hoops shall be 3-3/4" wide by 1/4" thick minimum.

Type 316 stainless steel bolts shall be provided for attaching ladder cage vertical bars to hoops, ladder hoops to brackets, ladder cage brackets to the ladder, and wall brackets to the

ladder.

All rungs shall be both mechanically attached to the ladder with stainless steel rivets and chemically bonded with epoxy.

All ladder and cage components are to be integrally pigmented yellow. All wall and floor mount brackets shall be light gray.

Pultruded structural shapes used in the ladder system are to have the minimum longitudinal mechanical properties matching Structural Shapes.

All fasteners used in the ladder system are to be 316 SS.

PART 3—FABRICATION

3.01 FRP HANDRAILS, GUARDRAILS, STRUCTURAL SHAPES AND LADDERS

FRP handrails, guardrails, structural shapes and ladders shall be as specified on the drawings. Measurements for railings shall be field-verified before fabrication.

3.02 FRP GRATINGS

Grating supplied shall meet the dimensional requirements and tolerances as shown or specified. The Contractor shall provide and/or verify measurements in field for work fabricated to fit field conditions as required by grating manufacturer to complete the work. When field dimensions are not required, contractor shall determine correct size and locations of required holes or cutouts from field dimensions before grating fabrication.

Except where specifically indicated otherwise on the drawings, each grating section shall be readily removable with maximum weight for each section not exceeding 50 pounds. Manufacturer to provide openings and holes where located on the Contract Drawings. Grating openings which fit around protrusions (pipes, cables, machinery, etc.) shall be discontinuous at approximately the centerline of opening so each section of grating is readily removable. Gratings shall be fabricated free from warps, twists, or other defects which affect appearance and serviceability.

All shop fabricated grating cuts shall be coated with vinyl ester resin to provide maximum corrosion resistance. All field fabricated grating cuts shall be coated similarly by the contractor in accordance with the manufacturer's instructions.

Utilize grating leg supports where indicated in the Contract Documents.

PART 4—INSTALLATION

4.01 GENERAL

Contractor shall install in accordance with Contract Documents and manufacturer’s installation drawings. Field cut and drill fiberglass reinforced plastic products with carbide or diamond tipped bits and blades. Seal cut or drilled surfaces in accordance with manufacturer's instructions. Follow manufacturer's instructions when cutting or drilling fiberglass products or

using resin products; provide adequate ventilation. Utilize ASTM 316 stainless steel anchor for attachment of guardrails, handrails, structural shapes, and ladders to structure.

4.02 FRP GRATINGS

Lock grating panels securely in place with hold-down fasteners. Type 316 stainless steel hold-down clips shall be provided and spaced at a maximum of four feet apart with a minimum of four per piece of grating, or as recommended by the manufacturer.

END OF SECTION

SECTION 06616

SOLID SURFACING FABRICATIONS

PART 1 - GENERAL

1.1 SUMMARY:

A. Work of this section includes:
1. Lavatory tops.
2. Countertops.
3. Window sills.

1.2 REFERENCES:

A. Applicable standards: Standards of the following, as referenced herein:
1. American National Standards Institute (ANSI).
2. ASTM International (ASTM).

1.3 SUBMITTALS:

A. Shop drawings: Indicate dimensions, component sizes, fabrication details attachment provisions and coordination requirements with adjacent work.

B. Samples: Submit minimum 6" by 6" samples. Indicate full range of color and pattern variation. Approved samples will be retained as a standard for work.

C. Product data: Indicate product description, fabrication information and compliance with specified performance requirement.

D. Maintenance data: Submit manufacturer's care and maintenance data, including repair and cleaning instructions. Include in project closeout documents.

1.4 DELIVERY, STORAGE AND HANDLING:

A. Deliver no components to project site until areas are ready for installation. Store indoors.

B. Handle materials to prevent damage to finished surfaces. Provide protective coverings to prevent physical damage or staining following installation for duration of project.

1.5 WARRANTY:

A. Provide manufacturer's warranty against defects in materials. Warranty shall provide for replacement material and labor for a period of five years, beginning at Date of Substantial Completion.

PART 2 - PRODUCTS

2.1 SOLID SURFACING MATERIAL:

A. Acceptable products:
   1. Basis of design: E. I. du Pont de Nemours & Co., Inc., Corian.
   2. Avonite, Inc., Avonite.
   3. Formica Corporation, Surrell.
   4. International Paper, Decorative Products Division, Nevamar Fountainhead.
   5. Wilsonart International, Gibralter.

B. Material: Cast methyl-methacrylate or polyester and acrylic resin based solid, structural surfacing material. Material shall be through-patterned and homogeneous. No coated materials nor non-homogeneous materials allowed.

2.2 CHARACTERISTICS:

A. Finish: Matte (Gloss rating of 5-20).

B. Thickness: Minimum 1/2".

C. Colors: As selected by Architect from manufacturer’s premium color range.

D. Countertops with sinks:
   1. Provide configurations indicated. Provide full-length units for lengths shorter than 10'-0".
   2. Provide backsplashes, endsplashes and aprons as indicated.
   3. Bowls shall be undermount (underslung) stainless steel bowls as specified in Division 15, Mechanical.

E. Lavatory tops with bowls:
   1. Provide configurations indicated. Provide full-length units for lengths shorter than 10'-0".
   2. Provide backsplashes, endsplashes and aprons as indicated.
   3. Bowls shall be undermount (underslung) stainless steel bowls as specified in Division 15, Mechaincal.

2.3 ACCESSORY PRODUCTS:

A. Joint adhesive: Manufacturer's standard, two-part adhesive kit to create inconspicuous, non-porous joints, with a chemical bond.

B. Sealant: Manufacturer’s standard mildew-resistant, FDA/UL recognized silicone sealant in color matching surfacing or clear formulations.

C. Sink/bowl mounting hardware: Manufacturer's approved stainless steel bowl clips, brass inserts and fasteners for attachment of undermount sinks/bowls.

2.4 FABRICATION:

A. Factory-fabricate components to greatest extent practicable, to sizes and shapes indicated, in accord with approved shop drawings.

B. Form joints between components using manufacturer's standard joint adhesive; without conspicuous joints and without voids. Attach a 2" wide reinforcing strip of solid surfacing under each joint.

C. Provide factory cutouts for plumbing fittings and bath accessories as indicated.

D. Rout and finish component edges to a smooth, uniform finish. Rout cutouts and sand edges smooth. Machine radii and contours to template. Repair or reject defective and inaccurate work.

E. Edge treatment for tops: As indicated on drawings.

2.5 SOURCE QUALITY CONTROL:

A. Allowable tolerances:
1. Variation in component size: ±1/8".
2. Location of openings: ±1/8" from indicated location.

PART 3 - EXECUTION

3.1 INSTALLATION:

A. Install components plumb, level and rigid, scribed to adjacent finishes, in accord with approved shop drawings and product data.

B. Form field joints using specified adhesive, with joints inconspicuous in finished work.

C. Install undermount sinks/bowls to countertops using specified adhesive, sealants and mounting hardware.

D. Provide back and end splashes as indicated. Adhere to countertops using specified color-matched silicone adhesive.

E. Keep components clean during installation. Remove adhesives, sealants and other stains. Keep clean until Date of Substantial Completion. Replace stained components.

F. Make plumbing connections to sinks in accord with Division 22, Plumbing.

3.2 PROTECTION:

A. Protect surfaces from damage until Date of Substantial Completion. Repair or replace damaged work which cannot be repaired.

END OF SECTION

SECTION 07100

DAMPPROOFING

PART 1 - GENERAL

1.1 SUBMITTALS:

A. Product data: Submit manufacturer's product specifications and installation instructions, including rates of application for each type installation specified.

1.2 QUALITY ASSURANCE:

A. Applicable standards: Standards of ASTM International (ASTM), as referenced herein.

B. Completed dampproofing application shall be pin-hole free.

PART 2 - PRODUCTS

2.1 CAVITY WALL DAMPPROOFING:

A. Acceptable products; subject to compliance with specified requirements:
1. BASF Building Products, Hydrocide® 700B Semi-Mastic.
2. Karnak Corp., #220AF Fibered Emulsion Dampproofing.
3. Lambert Corp., Lambco Waterban® 60SM.
4. W. R. Meadows, Inc., SEALMASTIC™ Emulsion Type 2 Dampproofing.

B. Characteristics: Cold-applied, semi-fibrated, asphalt emulsion containing non-asbestos fiber, meeting ASTM D1187-97(2002), Type 1 and ASTM D1227-95(2007), Type 2, Class I; brush- or spray-applied.
1. VOC Content: 30 g/L or less.

C. Primer: Type recommended by dampproofing manufacturer for application to concrete unit masonry and concrete substrates.

D. Reinforcing fabric for joints and abutting dissimilar substrates: Glass fiber mat reinforcement as recommended by dampproofing manufacturer.

PART 3 - EXECUTION

3.1 SURFACE PREPARATION:

A. Prior to application of materials, remove dirt, grease, mortar droppings and other foreign matter from substrate.
B. Prime wall surfaces prior to dampproofing application, as required by manufacturer's product data.

C. Apply dampproofing at temperatures above 40 degrees F., to dry, cured surfaces.

D. Preparation at joints and abutting dissimilar substrates: Apply one coat of dampproofing and fully embed a layer of specified glass fiber mat reinforcement into wet dampproofing. Reinforcement shall span joints and junctures and lap onto adjacent surfaces a minimum of 3" each side. Apply topcoat of dampproofing to all surfaces as further specified.

3.2 CAVITY WALL APPLICATION:

A. Spray- or brush-apply dampproofing in a minimum of two coats, in accord with manufacturer's product data, at a rate to achieve minimum total wet film thickness of 1/16".

B. Apply dampproofing to exterior face of interior masonry wythe in exterior double wythe walls.

C. Schedule application of dampproofing to precede rigid wall insulation installation so that insulation may be secured in dampproofing.

3.3 CLEAN UP:

A. Protect adjacent finished surfaces from damage or staining from this work by masking prior to application. Repair or replace surfaces damaged or stained by dampproofing work.

B. At completion of dampproofing operations, remove debris resulting from work, including spilled materials.

END OF SECTION

SECTION 07130

MEMBRANE WATERPROOFING

PART 1 - GENERAL

1.1 SUMMARY:

A. Work of this section includes application of a self-adhering membrane waterproofing to below-grade vertical surfaces, with drainage mat and protection board.

B. Related work specified elsewhere:
1. Earthwork
2. Concrete.
3. Slab-on-grade vapor retarder.
4. Vapor-permeable fluid-applied air barrier.

1.2 SUBMITTALS

A. Product data: Include manufacturer's project-specific product literature and installation instructions, including instructions for sealing at joints, terminations and protrusions.

B. Substrate certification: Submit certification from authorized representative of membrane system manufacturer, stating that substrate surfaces and conditions are acceptable for the purpose of providing specified warranty.

C. Samples: Submit minimum 1'-0" long samples of each type of waterproofing membrane, tape and prefabricated drainage mat.

1.3 QUALITY ASSURANCE:

A. Applicable standards as referenced herein: ASTM International (ASTM).

B. Manufacturer’s qualifications:
1. Sheet membrane waterproofing system shall be manufactured and marketed by a firm with a minimum of 20 years experience in production and sales of sheet membrane waterproofing.
2. Manufacturers proposed for use but not named in these specifications shall submit evidence of ability to meet requirements specified, and include a list of projects of similar design and complexity completed within past 5 years.

C. Installer’s qualifications: Installer shall have a minimum of five years experience in work of type required on this project.

D. Materials: For each type of material required for work of this section, provide primary materials which are products of one manufacturer.

E. Schedule coordination: Schedule work such that membrane will not be left exposed to weather for longer than that recommended by membrane manufacturer.

F. Pre-waterproofing conference: Prior to beginning waterproofing work, a pre-waterproofing conference will be held to review work to be accomplished.
   1. Contractor, Architect, waterproofing subcontractor, membrane system manufacturer's representative and all subcontractors who have equipment penetrating membrane or whose work involves access to waterproofed areas shall be present.
   2. Contractor shall notify Architect at least seven days prior to time for conference.
   3. During pre-waterproofing conference, establish procedures to maintain optimum working conditions and coordinate this work with related and adjacent work.
   4. Include review of special details and flashing.
   5. Contractor shall record minutes of meeting and distribute to attending parties.

1.4 DELIVERY, STORAGE AND HANDLING:

A. Deliver materials in labeled packages. Store and handle in strict compliance with manufacturer’s instructions. Protect from damage from weather, excessive temperature and construction operations. Remove and dispose of damaged material in accord with applicable regulations.

1.5 PROJECT CONDITIONS:

A. Perform work only when existing and forecasted weather conditions are within the limits established by the manufacturer of the materials used. Proceed with installation only when the substrate construction and preparation work is complete and in condition to receive membrane waterproofing.

B. Surfaces to receive membrane system shall be dry, smooth, free of voids, honeycombs, projections, loose aggregate, grease, oil and foreign material. Begin application only after surfaces are in proper condition to receive membrane system.

C. Ascertain that work of other trades penetrating membrane system is in place and accepted prior to installation of membrane system. Schedule application to minimize traffic on membrane.

1.6 WARRANTY:

A. Warrant waterproofing work from defects in materials and workmanship, including leakage, for a period of ten years, beginning at Date of Substantial Completion.

PART 2 - PRODUCTS

2.1 ACCEPTABLE PRODUCTS:

A. Basis of design: is Grace Construction Products, as follows:
   1. Vertical self-adhering waterproofing at exposed foundation walls: Vertical surfaces where foundation walls are excavated and exposed prior to waterproofing and backfilling: Bituthene 3000, with drainage mat and accessory materials.

B. Products of other manufacturers may be submitted as proposed substitutions for the Architect’s consideration, subject to compliance with the specified criteria and to the provisions of the Product Substitution Procedures section, and subject to Architect's acceptance.

2.2 VERTICAL SELF-ADHERING WATERPROOFING MEMBRANE:

A. Characteristics: Bituthene 3000 consists of a polyethylene sheet coated one side with adhesive consistency rubberized asphalt; minimum 60 mils thickness. Adhesive side shall be coated with release type paper.

B. Concrete and masonry primer: Basis of design is Grace Construction Products, Bituthene Primer B2.
   1. Type: Primer that can be applied to green and damp normal weight concrete after concrete is cured minimum 7 days.
   2. Application: Applied using lambswool rollers at the rate of 250-350 sf/gallon.

C. Surface conditioners, liquid membrane, mastic and sealant: Membrane manufacturer's standard components. Surface conditioners and primers shall comply with Volatile Organic Compound (VOC) regulations.

D. Prefabricated drainage mat for vertical application:
   1. Acceptable product: Grace Construction Products, Hydroduct 220.
   2. Characteristics:
      a. High density polyethylene core netting or molded polymer drain core with non-woven geotextile fabric adhered to one face and polymeric film on opposite face.
      b. Composite system flow rate shall be minimum 15 gpm/ft. when tested in accord with ASTM D4716-08.
      c. Core compressive strength shall be minimum 15,000 psf when tested in accord with ASTM D1621-10.
   3. Prefabricated drainage mat adhesive: Manufacturer's standard adhesive strips.

E. Protection board where drainage mat is not required: 1" thickness, molded or extruded polystyrene boards.

F. Termination bar for final (top) edge of waterproofing:
   1. Minimum 24 ga. by 1" wide continuous termination bar.

2. Material for termination bars shall be Type 302/304 stainless steel or heavy gauge aluminum, with locations for each as shown on the drawings.
3. Provide termination bars predrilled for anchors to match spacing of cold formed metal framing; maximum spacing of 16" o.c.
4. Fasteners and anchors:
   a. Self-drilling stainless steel for stud wall areas.
   b. Expansion anchors for concrete and masonry areas.

PART 3 - EXECUTION

3.1 PREPARATION:

A. Examine conditions of substrates and other conditions under which this work is to be performed and notify Contractor, in writing, of circumstances detrimental to proper completion of work. Do not proceed with work until unsatisfactory conditions are corrected.

3.2 VERTICAL SELF-ADHERING WATERPROOFING MEMBRANE SYSTEM:

A. Install sheet membrane system fully adhered to substrates in accord with manufacturer's product data, except where more stringent requirements are specified herein.

B. Prime and condition surfaces to receive membrane and flashing materials, complying with manufacturer’s product data. Prime only area which can be covered with sheet membrane during work period.

C. Reprime surfaces which are not covered within 24 hours of primer application.

D. Install membrane and flashing materials with side and end laps recommended by product data. Begin installation at low points, lapping succeeding sheets to shed water.

E. Membrane applications shall be fully adhered, smooth, straight and free of blisters, buckles, fishmouths and wrinkles affecting the complete adherence of the membrane. Patch and repair defective work in accord with manufacturer's product data. Areas which exhibit defective areas or generally poor or improper workmanship shall be removed and replaced, as directed by Architect.

F. Flashing: Install in accord with manufacturer's recommended details. Lap joints in accord with manufacturer's product data. Attach flashing at top edge with fasteners spaced at 8" o. c.

G. At below-grade walls, extend membrane down foundation face 4", minimum, below lowest floor slab, or where foundation walls extend substantially below lowest floor level, extend membrane minimum of 1'-0" below lowest floor slab. Carry membrane to within 1" of finish grade.

H. Trowel-apply mastic at exposed sheet edges.

I. Install continuous termination bar at top edges and where shown on the drawings. Anchor termination bar at each predrilled hole using stainless steel anchors and fasteners.

J. Apply liquid membrane at intersection of horizontal waterproofing with vertical surfaces. Apply in 1/4" wet thickness, extending 1" onto membrane and minimum 1-1/2" up face of vertical surface.

K. Lap membrane at joints 2-1/2", minimum.

L. Form 1" by 1" liquid membrane fillets at internal corners and at intersection of horizontal and vertical surfaces.

M. Double membrane at corners by application of a membrane strip centered along corner. Cover strip completely with full width sheet.

N. Apply a double layer of waterproofing membrane at protrusions, extending minimum of 6" in each direction. Seal around protrusion with liquid membrane material. Seal membrane terminations with mastic.

O. Repair punctures and tears in membrane by patching with membrane material prior to drainage mat or protection board installation. Trowel-apply mastic at exposed edges of patch.

P. Install prefabricated drainage mat over vertical membrane, where shown, after membrane installation. Secure to vertical surfaces with adhesive strips at rate required by product data. Secure in place until backfilling is completed.
   1. Overlap drainage panels 2", minimum. Peel filter fabric back and nest panels, replacing filter fabric over lap.
   2. At terminations, tuck filter fabric behind panel core.
   3. Terminate drainage panels within 6" of finished grade.
   4. At foundation drains, place drainage panel adjacent to drain. Wrap filter fabric around drain.

Q. At areas not requiring drainage mat, install protection board over membrane immediately upon installation. Secure in place until backfilling is completed.

R. Completed installations shall be free of leaks.

3.4 PROTECTION:

A. Protect each type of membrane in accord with manufacturer’s product data until placement of concrete and backfilling. Inspect for damage just prior to placement of concrete or backfill, and make repairs in accord with manufacturer’s product data.

END OF SECTION

SECTION 07180

LIQUID MEMBRANE DECK COATING

PART 1 - GENERAL

1.1 SUMMARY:

A. Work of this section includes an adhered fully reinforced, cold fluid-applied, polyurethane liquid resin waterproofing membrane system including membrane, penetration flashings, base flashings, and expansion joints, as indicated on drawings.
   1. Substrate preparation, cleaning, leveling and patching.
   2. Insulation/cover board/cap sheet installation.
   3. Temporary waterproofing and priming.
   4. Waterproofing membrane installation.
   5. Flashing installation and expansion joint installation.
   6. Protective surfacing.
   7. Alkalinity protection.
   8. Preparation for overburden installation.

B. Related work specified elsewhere:
   1. Wood blocking and nailers.
   2. Sheet metal flashing and trim.

1.2 SYSTEM DESCRIPTION:

A. System shall consist of a fully reinforced cold fluid-applied polyurethane liquid resin roofing and waterproofing membrane and flashing system, and all other ancillary waterproofing work including but not limited to installation of insulation, cover boards, overburden, sealants and metal work as specified.

1.3 REFERENCES:

A. National Roofing Contractors Association (NRCA) Roofing and Waterproofing Manual.

B. ACI-308 - Recommended Practice for Curing Concrete

C. ASTM International (ASTM):
   1. ASTM - D638 - Test Methods for Tensile Properties of Plastics
   2. ASTM - D4258 - Standard Practice for Surface Cleaning Concrete for Coatings
   3. ASTM - D4259 - Standard Practice for Abrading Concrete
   4. ASTM - D4541 - Method for Pull-Off Strength of Coatings using Portable Adhesion Tester
   5. ASTM - E96(A) - Test Methods of Moisture Transmission of Material
   6. ASTM E-108, ANSI/UL 790 for fire resistance.

D. International Concrete Repair Institute Guideline 03732 Concrete Surface Preparation

E. Steel Structures Painting Council (SSPC).

1.4 SUBMITTALS:

A. Membrane system product data: Provide current standard printed product literature indicating characteristics of membrane materials, flashing materials, components, and accessories product specification and installation.

B. Product Samples: Submit product samples of membrane and flashing materials showing color, texture, thickness and surfacing representative of the proposed system.

C. Submit sample copies of both Manufacturer and Applicator warranties for the periods stipulated. Each specimen shall be a preprinted representative sample of the issuing company's standard warranty for the system specified.

D. Membrane shop drawings: Submit shop drawings of cold fluid-applied reinforced polyurethane system showing project plan, size, flashing details, and attachment.

1.5 QUALITY ASSURANCE:

A. Membrane Manufacturer: Company specializing in manufacturing fully reinforced cold fluid applied liquid resin waterproofing membrane systems with a minimum of ten (10) years of documented applications in the United States. Membrane Manufacturer shall submit the following certifications for review:
   1. Substrates and conditions are acceptable for purpose of providing specified warranty.
   2. Materials supplied shall meet the specified requirements.

B. Applicator: Company specializing in performing the work of this section with (3) years documented experience and approved by system manufacturer for warranted membrane installation. Applicator shall submit the following certification for review:
   1. Applicator shall submit documentation from the membrane manufacturer to verify contractor's status as an approved applicator for warranted installations.

C. Evaluate moisture content of substrate materials. Contractor shall determine substrate moisture content throughout the work and record with Daily Inspection Reports or other form of reporting acceptable to the Owner or designated Representative, and Membrane Manufacturer.

D. Random tests to determine tensile bond strength of membrane to substrate shall be conducted by the Contractor at the job site using an Elcometer Adhesion Tester Model 106 or similar device, or by the performance of a manual pull test. Contractor shall perform tests at the beginning of the Work, and at intervals as required to assure specified adhesion with a minimum of three (3) tests per 5000 square feet. Smaller areas shall receive a minimum of three (3) tests. Test results shall be submitted to the Owner or his designated Representative and the

Membrane Manufacturer. Contractor shall immediately notify the Owner or his designated Representative and Membrane Manufacturer in the event bond test results are below specified values.

1. Adequate surface preparation will be indicated by tensile bond strength of membrane to substrate greater than or equal to 220 psi (1.5 N/mm2), as determined by use of an adhesion tester.
2. Adequate surface preparation will be indicated by 135° peel bond strength of membrane to substrate such that cohesive failure of substrate or membrane occurs before adhesive failure of membrane/substrate interface.
3. In the event the bond strengths are less than the minimum specified, additional substrate preparation is required. Repeat testing to verify suitability of substrate preparation.

E. Monitor quantities of installed materials. Monitor application of resin mixture, reinforcing fleece and flashing. Perform Work in accordance with manufacturer's instructions.

F. Pre-installation meeting: Convene a pre-installation meeting at the job site (1) week before starting work of this section. Require attendance of parties directly affecting work of this section, including but not limited to, Roofing/ Waterproofing Specifier, Owner's Representative, Roofing/Waterproofing Contractor, and Membrane Manufacturer's Representative. Review roofing/ waterproofing preparation and installation procedures, coordination and scheduling required with related work, and condition and structural loading limitations of deck/substrate.

G. Mock-up areas shall be used to determine required methods and tools to obtain degree of substrate preparation required by the membrane manufacturer. Conduct tests as required to verify that substrate preparation meets specified requirements. Tests shall include, but are not limited to, tensile bond strength and moisture content of substrate.

1. Prepare and clean a 3'-0" BY 3'-0" area of each substrate material type.
2. Submit findings in writing to Owner or his designated Representative and Membrane Manufacturer.
3. Mock-up areas shall be maintained for quality control for the entire project.

1.6 REGULATORY REQUIREMENTS:

A. Conform to applicable building and jurisdictional codes for roofing/waterproofing assembly and fire resistance requirements.

B. Comply with requirements of OSHA, NIOSH or local governing authority for work place safety.

C. Comply with authority or agency "Confined Space Policy" during and throughout all work to be performed.

1.7 FIELD INSPECTION SERVICES:

A. Manufacturer's technical representative shall provide the following inspections of the membrane application:

1. Jobstart inspection at the beginning of each phase of the project, to review special detailing conditions and substrate preparation.
2. Periodic in-progress inspections throughout duration of the project to evaluate membrane and flashing application.
3. Final punch-list inspection at the completion of each phase of the project prior to installation of any surfacing or overburden materials.
4. Warranty inspection to confirm completion of all punch list items, surfacing, and overburden application.

1.8 DELIVERY, STORAGE AND HANDLING:

A. Contractor together with Owner or his designated Representative shall define a storage area for all components. The area shall be cool, dry, out of direct sunlight, and in accordance with manufacturer's recommendations and relevant regulatory agencies. Materials shall not be stored in quantities that will exceed design loads, damage substrate materials, hinder installation or drainage.

B. Store solvent-bearing solutions, resins, additives, inhibitors or adhesives in accordance with the MSDS and/or local fire authority. After partial use of materials replace lids promptly and tightly to prevent contamination.

C. Roll goods shall be stored horizontally on platforms sufficiently elevated to prevent contact with water and other contaminants. DO NOT use rolls that are wet, dirty or have damaged ends.

D. Roofing/waterproofing materials must be kept dry at all times. If stored outside, raise materials above ground or roof level on pallets and cover with a tarpaulin or other waterproof material. Plastic wrapping installed at the factory should not be used as outside storage covers.

E. Follow manufacturer's directions for protection of materials prior to and during installation. Do not use materials that have been damaged to the point that they will not perform as specified. Fleece reinforcing materials must be clean, dry and free of all contaminants.

F. Copies of all current MSDS for all components shall be kept on site. Provide any and all crew members with appropriate safety data information and training as it relates to the specific chemical compound he or she may be expected to deal with. Each crew member shall be fully aware of first-aid measures to be undertaken in case of incidents. Comply with requirements of OSHA, NIOSH or local governing authority for work place safety.

1.9 ENVIRONMENTAL REQUIREMENTS:

A. Do not apply roofing/waterproofing membrane during or with the threat of inclement weather.

B. Application of cold fluid-applied reinforced polyurethane roofing/waterproofing membrane may proceed while air temperature is between 40°F (5°C) and 85°F (30°C) providing the substrate is a minimum of 5°F above the dew point.

C. When ambient temperatures are at or expected to fall below 50°F (10°C), or reach 85°F (30°C) or higher, follow Membrane System Manufacturer's recommendations for weather related additives and application procedures.

D. Ensure that substrate materials are dry and free of contaminants. DO NOT commence with the application unless substrate conditions are suitable. Contractor shall demonstrate that substrate conditions are suitable for the application of the materials.

E. Odor control and elimination measures are not typically necessary, but if required by Owner or his designated Representative, Contractor shall implement odor control and elimination measures prior to and during the application of the roofing/waterproofing materials. Control/elimination measures shall be field tested at off-hours and typically consists of one (1) or a multiple of the following measures:

1. Sealing of air intakes with activated carbon filters. Install filters in accor¬dance with requirements and recommendations of the filter manufacturer. Seal filters at joints and against building exterior walls to prevent leakage of unfiltered air.
2. Sealing of doorways, windows, and skylights with duct tape and polyethylene sheeting to prevent leakage of air into the building.
3. Erection and use of moveable enclosure(s) sized to accommodate work area(s) and stationary enclosure for resin mixing station. Enclosure shall be field construct¬ed or pre-manufactured of fire retardant materials in compliance with local code requirements in accordance with requirements of the Owner or his designated Representative. Equipment enclosure(s) with mechanical air intake/exhaust openings and Odor Control Air Cleaners, as required to clean enclosed air volume and to prevent odor migration outside the enclosure. Exhaust opening shall be sealed with activated carbon filter.

4. Protection of Contractor personnel and occupants of the structure and surrounding buildings as necessary to comply with requirements of OSHA, NIOSH and/or governing local authority.

F. When disposing of refuse or unused materials, observe EPA, OSHA and local disposal requirements.

1.10 COORDINATION AND PROTECTION:

A. Coordinate the work with the installation of associated metal flashings, accessories, appurtenances, etc. as the work of this section proceeds.

B. Building components shall be protected adequately (with tarp or other suitable material) from soil, stains, or spills at all hoisting points and areas of application.

Contractor shall be responsible for preventing damage from any operation under its Contract. Any such damage shall be repaired at Contractor's expense to Owner's satisfaction or be restored to original condition.

C. Provide barricades, retaining ropes, safety elements (active/passive) and any appropriate signage required by OSHA, NIOSH, and NSC and/or the Owner or designated Representative.

D. Protect finished roofing/waterproofing membrane from damage by other trades by the use of a cushioning layer such as 1" thick expanded polystyrene insulation and an impact layer such as 1/2" thick exterior-grade plywood.

E. Do not allow waste products containing petroleum, grease, acid, solvents, vegetable or mineral oil, animal oil, animal fat, etc. or direct steam venting to come into direct contact with the membrane unless approved by manufacturer's chemical resistance chart.

1.11 WARRANTY:

A. Manufacturer's material warranty: Provide 10 year manufacturer's material only warranty under provisions of this section. This warranty shall provide for supply of membrane only, limited to amounts necessary to effect repairs necessitated solely by material defective in content and composition.

B. Manufacturer's Vehicular and Pedestrian Traffic System Warranty: Provide 10 year manufacturer's premier warranty under provisions of this section. This warranty provides for cost of labor and materials for loss of watertightness, limited to amounts necessary to effect repairs necessitated by either defective material or defects in related installation workmanship, with no dollar limitation ("NDL"). Functional deterioration of the traffic-bearing surfacing is included in warranty coverage.

C. Waterproofing contractor's warranty: Provide 5 year "Applicator Maintenance Warranty" covering workmanship for all work of this section including installation of membrane, flashings, metal work, and roofing/waterproofing accessories.

D. Submit (2) executed copies of both the manufacturer and applicator warranties for the periods stipulated, starting from the date of substantial completion. Each warranty must be signed by an authorized representative of the issuing company.

PART 2 - PRODUCTS

2.1 GENERAL:

A. The products herein specified are totally pre-engineered products of the listed manufacturer and establish criteria for the approval of substitutions. Products must be part of a virtually odorless, pre-engineered, low VOC fully reinforced cold liquid applied polymeric resin waterproofing membrane system, equivalent in function, quality, composition and method of application to be considered for approval as an "Approved Substitute". Substitute materials must meet or exceed the physical performance characteristics of the specified materials. PMMA or

single component primers or resin systems will not be accepted. A minimum 165 g/m2 fleece reinforcement is required.

2.2 MANUFACTURERS:

A. Basis of design: Kemper Systems America, Inc., Traffic Topping System.

2.3 MATERIALS:

A. Membrane: Two-component, cold fluid-applied reinforced polyurethane waterproofing membrane with a 360 degree needle punched non-woven 165 g/m2 polyester reinforcing fleece, for a finished dry film membrane thickness of .070 inch nominal per ply.
   1. Resin basis of deign: Kemperol 2K-PUR resin for use in an adhered waterproofing system.

B. Physical Properties:
   1. Color: Gray-Green.
   2. Physical state: Cures to solid.
   3. Thickness (165 fleece): 70 mils.
   4. Tensile strength @ break (ASTM D-751): 120 lb/in.
   5. Elongation (ASTM D-751): 50%
   6. Tearing resistance (ASTM D-751): 5.0 lbs.
   7. Puncture resistance (FTMS 101-2031): 140 lbf.
   8. Dimensional stability (ASTM D-1204): 0.1%.
   9. Water absorption (ASTM D-471): 2.2%.
   10. Surface hardness (ASTM D-2240): Shore A 85.
   11. Water vapor transmission (ASTM E-96): 0.04 perms
   12. Usage time*: 30 minutes.
   13. Water resistant after*: 2 hours.
   14. Solid to walk on after*: 24 hours.
   15. Can be driven on after*: 48 hours.
   16. Surfacing to be applied between*: 16-48 hours.
   17. Apply overburden after: 2 days.
   18. Completely hardened: 3 days.
   19. Crack spanning: 2mm/0.08 inch.
   20. Short-term temperature resistance*: 250°C/482°F.

   * values obtained at 73°F, 50% relative humidity, may vary depending upon air flow, humidity and temperature.

2.4 FLASHINGS:

A. Membrane flashings: A composite of the same resin material as field membrane with 165 g/m2 fleece reinforcement.

2.5 SUBSTRATE PRIMERS AND RESIN ADDITIVES:

A. Polyurethane primer: Two-component, solvent-free polyurethane resin for use in

improving adhesion of membrane to wood, metal and bituminous substrate surfaces, as provided by the following manufacturer:

1. Basis of design: Kemper System's Kempertec D primer.

B. Epoxy primer: Two-component, solvent-free epoxy resin for use in improving adhesion of membrane to cementitious/masonry substrate surfaces, as provided by the following manufacturer:

1. Basis of design: Kemper System's Kempertec EP/EP5 primer.

C. Acrylic primer: Single-component, water-borne copolymerisates-based resin for use in improving adhesion of membrane to existing asphaltic bituminous roofing substrate surfaces and coated glass-faced polyisocyanurate foam insulation, as provided by the following manufacturer:

1. Basis of design: Kemper System's Kempertec BSF-R primer.

D. Cold weather additive: Additive specifically designed to accelerate the resin reaction time at ambient temperatures below 50ºF (10ºC). Accelerator to be used with cream resin Component A prior to mixing of multi-component resin, as provided by the following manufacturer:

1. Basis of design: Kemper System's Kemperol A 2K-PUR Accelerator.

2.6 TRAFFIC BEARING AGGREGATE SURFACING:

A. Coating: Two-component polyurethane-based resin with graded mineral filler:

1. Basis of design: Kemperdur TC Traffic Coating, Components A, B and C.

B. Sealer: Single component polyurethane-based sealer:

1. Basis of design: Kemperdur Deko Transparent.
2. Basis of design: Kemperdur ECO Finish (transparent).

C. Sealer: Two component epoxy-based sealer:

1. Basis of design: Kemperdur EP-FR Finish.

2.7 ACCESSORIES:

A. Application tools, accessories, and cleaners: Supplied and/or approved by membrane manufacturer for product installation.

B. Solvent-based cleaner for tools and membrane tie-ins: Methyl Ethyl Ketone (MEK) or acetone.

C. Water-based cleaner for membrane: Simple Green HD.

D. Topcoat surfacing aggregate: Silica sand, ceramic-coated quartz, or specialty aggregate shall be washed, kiln-dried, and dust-free with the following size specification:

1. Utility/Fire Rating: 0.5 - 1.2 mm
2. Alkalinity/Adhesion Key: 0.5 - 1.2 mm

3. Aesthetic/Pedestrian Traffic: 0.4 - 1.0 mm
4. Light Vehicular Traffic: 0.5 - 1.2 mm
5. Heavy Vehicular Traffic: 0.8 - 1.5 mm

E. Leveling and patching aggregate: Silica sand shall be washed, kiln-dried, and dust-free, suitable for troweling or pourable self-leveling, round grain or angular with the following size specification:
1. For voids less than 1” in depth: #00 (0.3 - 0.6 mm)
2. For voids 1” to 2” in depth: #0 (0.5 - 1.2 mm)

Mixing Proportions shall be a ratio of resin to sand at 1:2 by volume for leveling, 1:4 by volume for patching, or as approved by membrane manufacturer.

F. Backer Rod: Expanded, closed-cell polyethylene foam designed for use with cold-applied joint sealant.

G. Caulking: Single component, non-sag elastomeric polyurethane sealant meeting ASTM C920,Type S, Grade NS, Class 35 for use in sealing cracks and joints, and making watertight seals where required.

H. Wood Nailers and Cant Strips: New wood nailers and cant strips shall be pressure treated for rot resistance (e.g., “Wolmanized” or “Osmose K-33”), #2 or better lumber. Asphaltic or creosote treated lumber is not acceptable.

PART 3 - EXECUTION

3.1 EXAMINATION:

A. Verify that surfaces and site conditions are ready to receive work.

B. Verify deck/substrate openings, curbs, and protrusions through deck/substrate, wood cant strips and reglets are in place and solidly set.

C. Verify deck/substrate is structurally supported, secure and sound.

3.2 PREPARATION OF SUBSTRATE:

A. General: Surfaces to be prepared as a substrate for the new waterproofing system as follows:
1. Determine the condition of the existing structural deck/substrate. Defects in deck or substrate shall be corrected before new waterproofing work commences. Areas of deteriorated deck/substrate, porous or other affected materials must be removed and replaced with new to match existing.
2. Prepare flashing substrates as required for application of new waterproofing membrane flashings.
3. Inspect substrates, and correct defects before application of new waterproofing. Fill all surface voids greater than 1/8 inch wide with an acceptable fill material.

4. Remove all ponded water, snow, frost and/or ice from the work substrate prior to installing new waterproofing materials.

5. The final substrate for waterproofing shall be clean, dry, free of loose, spalled or weak material including coatings, mineral aggregate, and flood coat/gravel surfacing, oil, grease, contaminants, abrupt changes in level, waterproofing agents, curing compounds, and free of projections which could damage membrane materials.

B. Structural concrete:

1. New concrete shall have cured a minimum of 28 days in accordance with ACI-308, or as approved by Waterproofing Manufacturer's Technical Department.
2. New or existing concrete shall be free of oil, grease, curing compounds, loose particles, moss, algae growth, laitance, friable matter, dirt, bituminous products and previous waterproofing materials.
3. New or existing concrete shall be dry with a maximum moisture content of five (5) percent. Determinations of moisture content shall be performed by the Contractor. Contractor shall be responsible to perform periodic evaluations of moisture content during the work. Moisture evaluation results shall be submitted in writing to the Owner or his designated Representative and Waterproofing manufacturer for acceptance.
4. Where required, concrete shall be abrasively cleaned in accordance with ASTM D4259 to provide a sound substrate free from laitance. Achieve an open concrete surface in accordance with ICRI surface profiles CSP 3-5. When using mechanical methods to remove existing waterproofing products or surface deterioration, the surface profile shall not to exceed 1/4" (peak to valley).
5. The substrate shall be sound and all spalls, voids and blow holes on vertical or horizontal surfaces must be repaired prior to placement of the primer coat. Spalls and other deterioration shall be repaired in accordance with the requirements of the Owner or his designated Representative and Membrane manufacturer.
6. Areas of minor surface deterioration of 1/4" or greater in depth shall be repaired to prevent possible pooling of the liquid applied materials, leading to excessive usage of primer and resin.
7. Hollow-core panels, T-panels, and Twin-T panels shall have grouted joints between panels and shall be provided with mechanical securement from panel to panel.
8. For concrete materials with a compressive strength of less than 3,000 psi contact Waterproofing Manufacturer's Technical Department for substrate preparation requirements.

C. Masonry:

1. Walls shall be built with hard kiln dried brick or waterproof concrete block construction.
2. Areas of soft or scaling brick or concrete, faulty mortar joints, or walls with broken, damaged or leaking coping shall be repaired in accordance with the requirements of the Owner or his designated Representative and Flashing Membrane Manufacturer.

D. Steel/metal:

1. Clean and prepare metal surfaces to near white metal in accordance with SSPC - SP3 (power tool clean) or as required by membrane manufacturer. Extend preparation a minimum of one (1) inch beyond the termination of the membrane flashing materials.

2. In addition to cleaning, all metal surfaces shall be abraded to provide a rough open surface. A wire brush finish is not acceptable.

E. Wood/plywood: Plywood shall be identified with American Plywood Association (APA) grade trade marks and shall meet the requirements of product standard PS1. Strip plywood joints with four inch (4”) wide strip of flashing membrane. Cover knot holes or cracks with strips of flashing membrane.

F. Other flashing surfaces: Remove all contaminants as required by membrane manufacturer. Surface preparation shall be performed by means approved by Owner or his designated Representative.

G. Finish leveling, patching and crack preparation:

1. General: epoxy primer/sand mix is the preferred material for all concrete and masonry substrate finish leveling, crack and wall/deck preparation and patching. Epoxy primer/sand patching mix provides a set time of approximately twelve (12) hours and does not require surface grinding. Apply primer/sand mix in conjunction with general surface priming.

2. Concrete and masonry substrate leveling & patching: Substrate conditions are to be evaluated by the Contractor, the Owner, or his designated Representative, and Membrane manufacturer. Perform leveling and patching operations as follows:

   a. Level uneven surfaces with a leveling mixture of primer and approved kiln-dried silica sand in a 1:2 primer to sand ratio by volume. Spread and plane this compound with a squeegee and trowel to achieve a flat surface.

   b. Fill cavities with a patching mixture of primer and approved kiln-dried sand in a 1:4 primer to sand ratio by volume.

   c. Silica sand must be kept absolutely dry during storage and handling.

   d. Any surface to be leveled or filled must first be primed with an appropriate primer.

3. Joint and Crack Preparation: Joints, cracks and fractures in the structural deck/substrate shall be prepared as defined below prior to installation of the waterproofing membrane. Note: Joints, cracks, and fractures may telegraph through the waterproofing membrane.

   a. Non-Moving Cracks, Joints, and Voids: Determine that crack/joint is non-moving. Clean out crack/joint by brushing and oil-free compressed air. Fill crack/joint with polyurethane sealant. Voids require the installation of backer rod or other backing material prior to application of the polyurethane sealant. Allow for a minimum of twelve (12) hours cure or as required by sealant Manufacturer.

   b. Moving cracks: Determine that crack is moving. Clean out crack by brushing and oil-free compressed air.

Fill crack with polyurethane sealant. Allow for a minimum of twelve (12) hours cure or as required by sealant manufacturer. Following full curing of primer, apply waterproofing resin and 4" wide strip of membrane (resin and fleece) in accord with membrane manufacturer's product data.

3.3 WOOD NAILER LOCATION AND INSTALLATION:

A. Install pressure-treated wood nailers as specified, and as required by the Membrane manufacturer. Wood nailers are required to match the thickness of insulation and cover board, and are to be secured directly to the structural deck. Wood nailers shall be installed at all roof edges and on either side of expansion joints, as well as beneath any equipment flanges.

B. Secure wood nailer: Wood nailers shall be firmly fastened to the deck. The wood nailer attachment must be able to resist a minimum force of 200 lbs. per lineal foot, in any direction. Mechanically fasten wood nailers as required to resist a force of 200 lbs per lineal foot, but with no less than 5 fasteners per 8 foot or 6 fasteners per 10 foot length of nailer. Refer to current FM Loss Prevention Bulletin 1-49 for additional attachment recommendations.

3.4 PRIMER APPLICATION:

A. General:
1. Mix and apply single and two-component primer in strict accordance with written instructions of Membrane Manufacturer. Use only proprietary materials, as supplied by the membrane manufacturer.
2. The substrate surface must be dry, with any remaining dust or loose particles removed using clean, dry, oil-free compressed air, industrial vacuum, cloth wipe or a combination of methods.
3. Do not install primer on any substrate containing newly applied and/or active asphalt, coal-tar pitch, creosote or penta-based materials unless approved in writing by Membrane Manufacturer. Some substrates may require additional preparation before applying primer.

B. Mixing of Kempertec EP and Kempertec D Primers:
1. Premix primer Component A thoroughly with a spiral agitator or stir stick. Pour primer Component B into Component A and mix the components for approximately 2 minutes with a clean spiral agitator on slow speed or stir stick without creating any bubbles or streaks. DO NOT AERATE. Primer solution should be a uniform color, with no light or dark streaks present.
2. Do not thin primer. Determine required primer coverage for each substrate material/condition and apply in accord with written Membrane Manufacturer'S product data.
3. Mix only that amount of primer components A & B that can be used in 30 minutes.

C. Mixing of Quick-Dry Kempertec EP5 Primer:
1. Premix primer Component A thoroughly with a spiral agitator or stir stick. Pour primer Component B into Component A and mix the components for approximately 2 minutes with a clean spiral agitator on slow speed or stir stick without creating any bubbles or streaks. DO NOT AERATE. The Primer solution should be a uniform color, with no light or dark streaks present.
2. Do not thin primer. Determine required primer coverage for each substrate material/condition and apply in strict accordance with written instructions of Membrane Manufacturer.
3. Mix only that amount of primer components A & B that can be used in 20 minutes.

D. Application of Primer:
1. Roll or brush the primer evenly onto the surface to fully saturate the substrate in one application. Do not allow primer to pond or collect in low areas. Follow manufacturer's recommended application rates to ensure that a thin layer of cured primer remains on the substrate surface.
2. Apply primer only up to the edge of the membrane flashing terminations. Primer application past the membrane terminations requires surfacing with an approved material.
3. For EP/EP5 primer applications over cementitious substrates where protection from substrate wetness is required, apply primer coat at a heavier application rate until pore saturation is achieved.
4. For all EP/EP5 primer applications, apply kiln-dried sand into the final coat of EP/EP5 primer while still wet at the rate of 50 lbs. per 100 square feet.
5. Allow standard primers to cure for a minimum of twelve (12) hours before membrane application. Allow quick-dry primers to cure for a minimum of four (4) hours before membrane application. Membrane must be applied to primer only when completely dry and without tack.
6. Exposure of the primer in excess of eight (8) days or premature exposure to moisture may require removal and application of new primer. DO NOT apply new primer over exposed primer older than eight (8) days, primer prematurely exposed to moisture, or primer used as temporary waterproofing, unless approved in writing by the Membrane Manufacturer.

E. Disposal of Primer:
1. Cured primer may be disposed of in standard landfills. This is accomplished by thoroughly mixing all components.
2. Uncured primer is considered a hazardous material and must be handled as such, in accord with local, state and federal regulation. Do not through uncured resin away.

3.5 MEMBRANE APPLICATION:

A. General:
1. It is recommended to apply the waterproofing membrane immediately following full curing of the primer in order to obtain the best bond between

primer and membrane.

2. Mix and apply cold fluid-applied reinforced polyurethane waterproofing membrane in strict accordance with written instructions of Membrane Manufacturer. Use only proprietary membrane resins and materials, as supplied by the membrane manufacturer.
3. The primed substrate surface shall be dry, with any remaining dust or loose particles removed using clean, dry, oil-free compressed air, industrial vacuum, cloth-wipe or a combination.
4. Protect all areas where membrane has been installed. Do not work off installed membrane during application of remaining work before forty-eight (48) hours of curing. Movement of materials and equipment across installed membrane is not acceptable. If movement is necessary, provide complete protection of affected areas.
5. Closely follow the Membrane Manufacturer's recommendation for hot and cold weather application. Monitor surface and ambient temperatures, including the effects of wind chill.

B. Mixing of Kemperol 2K-PUR Resin:

1. Mix resin Component A (cream formulation) with a spiral agitator until the liquid is a uniform cream color. If the ambient temperature is below 50°F (10°C), then a weather related additive should be combined and mixed into the Component A.
   a. Accelerator should be added to resin Component A when the ambient temperature is 50°F (10°C) and below. The accelerator should be mixed with the spiral agitator for 2 minutes or until both liquids are thoroughly blended.
2. Pour resin Component B into Component A at a 4:1 ratio (by weight) and thoroughly mix the components with a clean spiral agitator. The Resin solution should be a uniform color, with no light or dark streaks present.
3. Mix only that amount of resin components A & B that can be used in 30 minutes.

C. Application of resin/fleece:

1. Apply mixed resin to the prepared surface at the manufacturer's recommended application rate. The resin should be rolled or brushed liberally and evenly onto the surface using a broad, even stroke. Cover one working area at a time, between 15 – 20 ft.2 (1.4 – 1.9 m2).
2. Roll out dry polyester fleece onto the liquid resin mix, making sure the SMOOTH SIDE IS FACING UP (natural unrolling procedure), avoiding any folds and wrinkles. The fleece will begin to rapidly saturate with the liquid resin mix. Use a medium nap roller or brush to work the resin into the fleece, saturating from the bottom up, and eliminating air bubbles, wrinkles, etc. The appearance of the saturated fleece should be light opaque amber with no white spots. White spots are indications of unsaturated fleece or lack of adhesion. It is important to correct these faults before the resin cures.
3. Apply additional liquid resin mix on top of fleece at manufacturer's recommended application rate to finish the saturation of the fleece. Roll this final coating into the fleece, which will result in a glossy appearance. The fleece can only hold so much resin and all excess should be rolled

forward to the unsaturated fleece, eliminating ponding or excessive build-up of the resin. The correct amount of resin will leave no whiteness in fleece and there will be a slightly fibrous surface texture. The final resin coating should be smooth and uniform.

4. Approximately 2/3 of the total resin should be applied to the substrate below the fleece reinforcement, and 1/3 of the total resin should be applied over the fleece reinforcement.
5. Prevent contact between mixed/unmixed resin and new/existing membrane. If any unmixed resin contacts membrane surface remove immediately and clean thoroughly with a cloth rag.
6. At all fleece seams, allow a 2” overlap for all side joints and a 4” overlap for all end joints.
7. At membrane tie-offs, clean in-place membrane with MEK (methyl ethyl ketone) solvent or acetone once resin has cured. Allow solvents to fully evaporate before application of new resin.

D. Disposal of Resin:

. Cured resin may be disposed of in standard landfills. This is accomplished by thoroughly mixing all components.

2. Uncured resin is considered a hazardous material and must be handled as such, in accordance with local, state and federal regulation. Do not throw uncured resin away.

3.6 FLASHING APPLICATION:

A. General:

1. Install flashing system in accordance with the requirements/ recommendations of the Membrane manufacturer and as depicted on standard drawings and details. Provide system with base flashing, edge flashing, penetration flashing, counter flashing, and all other flashings required for a complete watertight system.
2. Wherever possible, install the flashings before installing the field membrane to minimize foot traffic over newly installed field membrane.
3. All membrane flashings shall be installed concurrently with the waterproofing membrane as the job progresses. Temporary flashings are not allowed without prior written approval from the Membrane manufacturer. Should any water penetrate the new waterproofing membrane because of incomplete flashings, the affected area shall be removed and replaced at the contractor’s expense.
4. Provide a minimum vertical height of 8” for all flashing terminations. Flashing height shall be at least as high as the potential water level that could be reached as a result of a deluging rain and/or poor slope. Do not flash over existing through-wall flashings, weep holes and overflow scuppers.
5. All flashings shall be terminated as required by the Membrane Manufacturer.
6. Alkalinity surface protection consisting of one application of EP primer and one application of approved broadcast mineral aggregate surfacing shall be applied wherever stone, concrete, or masonry elements will be placed directly over the flashing.

B. Metal Flashing – General:
   1. Metal flashings shall be fabricated in accordance with the current recommendations of SMACNA and in accord with standard drawings and project details.
   2. Metal flashing flanges to which membrane is to be bonded shall be a minimum of four (4) inches in width, and secured to the substrate or wood nailers six (6) inches on center staggered with fasteners appropriate to the substrate type. The flanges shall be provided with a roughened surface that has been cleaned of all oil and other residue.
   3. Metal edges that will be overlaid with membrane shall be provided with a 1/4” min. hemmed edge.
   4. Apply primer, resin and fleece to metal flange, extending membrane to outside face of metal edging, and to vertical face of metal base/curb flashing.

C. Membrane Flashing – General:
   1. Membrane flashings shall be fabricated with primer appropriate for the substrate surface, resin of the same base chemical type as the field membrane, and fleece of the same weight as the field membrane unless specified otherwise.
   2. Primer, resin, and fleece mixing and application methods as specified for field membranes are also suitable for membrane flashing.
   3. Fleece shall overlap 2” (5 cm) minimum for all joints. Fleece shall be cut neatly to fit all flashing conditions without a buildup of multiple fleece layers. Work wet membrane with a brush or roller to eliminate blisters, openings, or lifting at corners, junctions, and transitions.

D. Pipes, conduits, and unusually shaped penetrations: Flashing is typically constructed as a two part assembly consisting of a vertical wrap and a horizontal target patch. There must be a minimum of a two (2) inch (5 cm) overlap between vertical and horizontal flashing components.

E. Drains and scuppers:
   1. Acceptable drain and scupper materials are cast iron, cast aluminum, and copper.
   2. Connect new drains and scuppers to existing storm sewer system.
   3. Flashing shall consist of a fully saturated membrane bottom layer looped into the joint as a cradle, a compressible foam or rubber insert at 25% compression fitted into the joint, and a membrane top layer applied over the joint. Extend both fleece layers four (4) inches minimum onto the field substrate on both sides of the joint.
   4. Apply the field membrane over the entire joint area.

F. Electrical conduit, gas lines and lightning protection:
   1. Supports for electrical conduit and gas lines greater than one (1) inch in diameter require the use of a separate engineered support system.

2. Supports for electrical conduit and gas lines one (1) inch or less in diameter, and bases for lightning protection rods and cable, can be adhered directly to the membrane surface with a single-component, high quality polyurethane sealant.

3.7 MEMBRANE PREPARATION FOR SURFACINGS AND COATINGS:

A. Membrane must be clean and dry, and free of all contaminants that may interfere with the adhesion of the surfacing and coating to the membrane surface.

B. Membrane exposed less than 48 hours prior to application of surfacing and coating materials does not require special surface preparation. It is highly recommended that all surfacing and coating materials be applied to the membrane surface within 48 hours.

C. Membrane exposed longer than 48 hours will require sanding/scuffing of the surface to remove the hard gloss finish, followed by an MEK or acetone solvent wipe.

3.8 TRAFFIC SURFACING:

A. Mixing of traffic coating:
1. Mix Component A (light brown formulation) and Component B (white formulation) in a separate clean mixing bucket with a spiral Kemperol agitator for 1 minute, until the liquid is a uniform beige color.
2. Gradually add Component C (white graded fillers) to the liquid while mixing continues for an additional 1 minute until a smooth, lump free mix is produced.
3. Mix only that amount of surfacing that can be used in 10 minutes. Do not exceed mixing times.

B. Application of surfacing and aggregate:
1. Empty mixing bucket of traffic coating mix onto the prepared surface and spread with a 1/4" by 1/4" by 1/4" notched metal trowel at the manufacturer’s specified coverage rate.
2. Allow the surfacing mix to self-level and reach an initial set for 10-20 minutes until material will retain a peak after being touched by a finger.
3. Broadcast aggregate to excess into surfacing until a uniform dry aggregate layer has been achieved. Aggregate will initially sink into surfacing, requiring the application of additional aggregate.
4. Allow the aggregate-filled surfacing to cure for approximately 2 hours, then remove excess aggregate by brooming and vacuuming.

C. Sealing:
1. Apply specified Kemperdur finish sealer at the manufacturer’s specified coverage rate to provide a sealed, maintainable surface finish.
2. After completion of mineral aggregate surfacing, avoid any traffic for a minimum of three (3) days.

3.9 TEMPORARY CLOSURES AND WATERSTOPS:

A. Ensure that moisture does not damage any completed section of the new waterproofing system. Completion of flashings, terminations, and temporary closures shall be completed as required to provide a watertight condition. All temporary closures shall be made as recommended or required by the membrane manufacturer.

3.10 PROTECTION:

A. Upon completion of waterproofing and flashings (including all associated work), institute appropriate procedures for surveillance and protection of roofing during remainder of construction period. Protect all areas where membrane has been installed.

3.11 FLOOD TEST:

A. A flood test of the completed membrane and flashing system shall be conducted prior to the installation of any surfacing. The flood test shall be of a 24 hr. minimum duration, and shall apply a water head of 2” over the entire application area. Any incidents of water entry shall be evaluated and all necessary repairs conducted, followed by an additional flood test.

3.12 CLOSEOUT:

A. Correction of Work: Work that does not conform to specified requirements including tolerances, slopes, and finishes shall be corrected and/or replaced. Any deficiencies of membrane application, termination and/or protection as noted during the Membrane Manufacturer’s inspections shall be corrected and/or replaced at Contractor’s expense.

B. Clean-Up: Site clean-up, including both interior and exterior building areas that have been affected by construction, shall be restored to preconstruction condition.

END OF SECTION

SECTION 07181

PEDESTRIAN TRAFFIC COATINGS

PART 1 - GENERAL

1.1 SUMMARY:

A. Work of this section includes application of a heavy duty pedestrian traffic coating over cured concrete surfaces, as indicated.

B. Related work specified elsewhere:
   1. Concrete.

1.2 SUBMITTALS:

A. Shop drawings: Indicate specific substrate requirements, material and accessory locations, thicknesses and termination details required for this project. Include details for terminations at vertical surfaces, slab edges, protrusions, penetrations and other details particular to this project.

B. Product data: Submit manufacturer's instructions for installation of elastomeric material over concrete deck. Indicate detailed requirements for preparation of surfaces, application and protection requirements. Delete inapplicable data from product data.

C. Samples: Submit color samples for Architect's selection. Samples shall be not less than 1'-0" by 1'-0" and shall indicate full range of color and texture to be expected in completed work.

D. Maintenance data: Submit as part of Contract closeout documents. Include recommendations for cleaning, periodic inspections, care, temporary and permanent repairs.

1.3 QUALITY ASSURANCE:

A. Applicator qualifications: Applicator shall be approved by product manufacturer in writing. Approval shall indicate that manufacturer has trained applicator in installation of specified materials.

B. Applicable standards: Standards of ASTM International (ASTM); as referenced herein.

1.4 DELIVERY, STORAGE AND HANDLING:

A. Deliver materials to project site in manufacturer's original packaging. Store off ground, under cover. Protect from damage, deterioration and contamination.

1.5 JOB CONDITIONS:

A. Moist-cure concrete surfaces to receive traffic coating.

B. Concrete surfaces indicated to receive pedestrian traffic coating shall be a minimum of 28 days old.

C. Ascertain that work of related trades is complete prior to application of coating materials in order to avoid damage to finished system.

D. Environmental conditions: Install materials only when ambient temperature exceeds 40 degrees F. and under dry weather conditions.

1.6 WARRANTY:

A. Provide joint manufacturer and applicator watertight warranty covering defects in materials and workmanship, including leakage, for a period of five years, beginning at Date of Substantial Completion. Warranty shall include the following:
1. Concrete movement and cracks up to 1/16" in width.
2. Cohesive or adhesive failure of the coating.
3. Weathering deficiencies resulting in coating failure.
4. Abrasion or tear failure of coating resulting in coating failure.
5. Watertightness.

PART 2 - PRODUCTS

2.1 COATING SYSTEM:

A. Acceptable systems; subject to compliance with specified requirements:
1. BASF Building Systems, Sonneborn, Sonoguard Pedestrian System; minimum coating thicknesses and aggregate coverage:
a. Base coat: 25 mils wet film thickness.
b. Top coat: 20 mils wet film thickness.
c. Aggregate: 10-25 lbs. per 100 sq. ft.
2. Neogard, Div. of Jones-Blair, PEDA-GARD; minimum coating thicknesses and aggregate coverage:
a. Base coat: 18 mils dry film thickness.
b. Wearing surface coat: 6 mils dry film thickness.
c. Aggregate: 10 lbs. per 100 sq. ft.
d. Top coat: 8 mils dry film thickness.
3. Tremco, Inc., Vulkem 350/351 Waterproofing System; minimum coating thicknesses and aggregate coverage:
a. Base coat: 40 mils wet film thickness.
b. Top coat: 100 sq. ft. per gallon.
c. Aggregate: 6-8 lbs. per 100 sq. ft.

B. Coating components:
1. Coating material: High-solids, moisture-cured polyurethane.
2. Primer: Type indicated in product data.

3. Aggregate for standard coating: Graded silica sand, 30 to 50 mesh.
4. Aggregate for heavy traffic coating: Graded silicone carbide or aluminum oxide, minimum 6.5 Moh's scale hardness, 24 mesh.
5. Sheet flashings: Minimum 50 mil thickness elastomeric sheet; composition indicated in product data.
6. Sealant: Type indicated in product data. Where exposed, sealant shall match coating in color.

C. Traffic coatings shall meet the properties, performance standards and installation requirements of ASTM C957-06 and ASTM C1127-01(2009).

D. All components shall be products of system manufacturer or acceptable by him for use on this project.

E. Colors: As selected by Architect from manufacturer’s premium color range.

F. VOC Content: Traffic coating shall have a VOC content of 150 g/L or less when calculated according to 40 CFR 59, Subpart D (EPA Method 24).

PART 3 - EXECUTION

3.1 PREPARATION OF SUBSTRATE:

A. Perform bond and moisture tests on subfloors in accord with ASTM F2170-02 and coating manufacturer’s product data, to determine if surfaces are acceptable to receive specified pedestrian traffic coating products. Correct conditions detrimental to pedestrian traffic coating installation prior to starting installation.

B. Surfaces shall be dry, broom clean, free of loose or foreign materials, oil and grease, prior to application of elastomeric materials.

C. Surfaces to receive traffic coating shall have finish acceptable to system manufacturer. Acid-etch or mechanically blast as required by coating manufacturer’s product data.

3.2 APPLICATION:

A. Apply traffic coating system in accord with approved shop drawings and manufacturer's product data.

B. Prepare joints and cracks in accord with manufacturer's product data:
1. Clean, prime and coat shrinkage cracks with minimum 20 mils of coating material, extending minimum 2" each side of crack.
2. Cut out cracks over 1/16" in width to a minimum width and depth of 1/4". Clean, prime and seal sawn cracks and control joints with specified sealant, flush with adjacent surfaces. Cover sealed joint with bond breaker tape and coat sealed cracks as specified for shrinkage cracks.
3. Clean, prime and seal internal corners with sealant and tool to form cant approximately 1" wide. Cover cant with bond breaker tape and coat as specified for shrinkage cracks.

4. Feather edges of crack control strip coatings to conceal edge under top coating.

C. Prime surfaces to receive traffic coating system per product data.

D. Install sheet flashing at locations indicated on manufacturer's details. Bond sheet flashing in accord with product data.

E. Heavy duty traffic coating: Install traffic coating system, including number of coats, thickness and aggregate rate as recommended by product data, however not less than three coats, top two coats incorporating silicone carbide or aluminum oxide aggregate embedded within each coat.

F. Embed aggregate granules in top coat of traffic coating system while still in fluid condition. Broadcast granules at the rate indicated herein and to achieve a uniform distribution.

G. Where coating system terminates on a continuing surface, provide a formed reglet or sawn joint into which coating system can terminate. Return coating into termination joints and expansion joints.

H. Where coating system terminates at abutting wall or curb surfaces, provide a sealant cant and turn coating minimum 4" up abutting surface and terminate in reglet or counterflash in manner to prevent moisture penetration behind coating. Comply with manufacturer's product data. Omit aggregate to base.

I. Finished installation shall be uniform throughout, free of voids, depressions or imperfections. Color, texture and finish of coating shall be consistent.

J. Caulk expansion joints and intersection of traffic coating system and adjacent materials using specified sealant. Apply in accord with applicable portions of Joint Sealants section. Install expansion joint covers as specified in Expansion Control section.

K. Protect coating installation until Date of Substantial Completion. Repair or replace damaged or defective work.

END OF SECTION

SECTION 07200

THERMAL INSULATION

PART 1 - GENERAL

1.1 SUMMARY:

A. Related work:
1. Concrete.
2. Dampproofing.
3. Roof insulation.
4. Firestopping.
5. Joint sealants.
6. Acoustical insulation.
7. Mechanical insulation.

1.2 SUBMITTALS:

A. Product data: Submit product data and installation instructions for each type installation.

B. Certification: Submit manufacturer's certification that expanded polystyrene wall insulation meets specified density and fire resistance requirements.

1.3 QUALITY ASSURANCE:

A. Applicable standards: ASTM International (ASTM), standards as specified herein.

PART 2 - PRODUCTS

2.1 BATT INSULATION:

A. Batt insulation:
1. Walls:
a. Unfaced fiberglass batts complying with ASTM C665-06, Type I, rated thermal resistance (R-value) as indicated on drawings.
b. Surface burning characteristics: Flame spread of 25 or less and smoke developed 50 or less when tested in accord with ASTM E84-10b.
c. Formaldehyde content: Zero.
d. Width: Equal to framing spacing.

2. Ceilings, plenums and soffits:
a. Unfaced fiberglass batts complying with ASTM C665-06, Type I; rated thermal resistance (R-value) as indicated on drawings.

b. Surface burning characteristics: Flame spread of 25 or less and smoke developed 50 or less when tested in accord with ASTM E84-10b.
c. Formaldehyde content: Zero.
d. Width: Equal to framing spacing.

B. Acoustical insulation: Refer to Gypsum Board section.

C. Tape: Insulation manufacturer's standard foil-faced tape; width required to cover joints.

D. Fasteners: Stick-clip spindle fasteners; spindle length as required for insulation thickness.

2.2 EXTRUDED POLYSTYRENE CAVITY WALL INSULATION:

A. Acceptable products; subject to compliance with specified requirements:
1. The Dow Chemical Co., Styrofoam, Cavitymate.
2. Owens-Corning, Foamular 150.
3. Pactiv Building Products, GreenGuard SB Insulation Board.

B. Characteristics:
1. Material: Extruded, closed cell polystyrene boards complying with ASTM C578-10, Type X.
2. Thickness: 2".
3. Compressive strength: Minimum 15 psi when tested in accord with ASTM D1621-10.
4. Aged R value at 75 degrees F.: 5.0/in.
5. Surface burning characteristics: Flame spread of 25 or less and smoke developed 450 or less when tested in accord with ASTM E84-10b.
6. Compressive strength: 15 minimum, tested in accord with ASTM D1621-10.
7. Water vapor permeance: Maximum 1.1 perm-inch, tested in accord with ASTM E96-05.
8. Water absorption: Maximum 0.3% by volume.
9. Sizes: 1'-4" by 8'-0".
10. Edges: Square.

C. Adhesive, joint sealant and joint tape: As recommended by insulation manufacturer.

PART 3 - EXECUTION

3.1 INSTALLATION:

A. General: Comply with manufacturer's product data for each type installation. Install insulation fitted to adjacent construction and with tight joints to provide unbroken thermal barrier. Cut insulation around obstructions and protrusions; fill voids with insulation. Remove projections interfering with installation.

B. Batt insulation:
   1. Install batt insulation in exterior walls, soffits and ceiling areas as indicated. Friction fit unfaced insulation and secure with tension wires.
   2. Install batt insulation with butted joints.

C. Extruded polystyrene insulation: Secure extruded polystyrene cavity wall insulation to masonry by embedding in tacky dampproofing.
   1. Install with end and edge joints butted tightly.
   2. Seal vertical and horizontal edges using sealant or joint tape as recommended by the insulation manufacturer.

END OF SECTION

SECTION 07260

SELF-ADHERED SHEET MEMBRANE AIR BARRIERS, VAPOR IMPERMEABLE

PART 1 - GENERAL

1.1 SUMMARY:

A. Work of this section includes:
1. Fluid applied air and vapor barrier membrane system located in the non-accessible part of the wall.
2. Materials and installation methods to bridge and seal air leakage pathways in roof and foundation junctions, window and door openings, control and expansion joints, masonry ties, piping and other penetrations through the wall assembly.

B. Related work specified elsewhere:
1. Cast-In-Place Concrete.
2. Unit Masonry.
3. Bituminous dampproofing.
4. Self-Adhering Sheet Waterproofing
5. Elastomeric Membrane Roofing
6. Sheet Metal Flashing and Trim
7. Joint Sealants

1.2 PERFORMANCE REQUIREMENTS:

A. Provide an air and vapor barrier system to perform as a continuous barrier to air infiltration/exfiltration and water vapor transmission and to act as a liquid water drainage plane flashed to discharge any incidental condensation or water penetration.

B. Air barriers: The building envelope shall be designed and constructed with a continuous air barrier to control air leakage into, or out of the conditioned space. The air barrier shall have the following characteristics:
1. It must be continuous, with all joints made airtight.
2. It shall have an air permeability not to exceed 0.004 cfm/ft2 under a pressure differential of 0.3 in. water. (1.57 psf.) (equal to 0.02L/s/m2 @ 75 Pa.).
3. It shall be capable of withstanding positive and negative combined design wind, fan and stack pressures on the envelope without damage or displacement, and shall transfer the load to the structure. It shall not displace adjacent materials under full load.
4. Air barrier shall be joined in an airtight and flexible manner to the air barrier material of adjacent systems, allowing for the relative movement of systems due to thermal and moisture variations and creep. Connection shall be made between:
   a. Foundation and walls.
   b. Walls and windows or doors.
   c. Different wall systems.

d. Wall and roof.
e. Wall and roof over unconditioned space.
f. Walls, floor and roof across construction, control and expansion joints.
g. Walls, floors and roof to utility, pipe and duct penetrations.

C. Air barrier penetrations: Penetrations of the air barrier and paths of air infiltration/exfiltration shall be made airtight.

1.3 REFERENCES:

A. The following standards and publications are applicable to the extent referenced in the text. The most recent version of these standards is implied unless otherwise stated.
1. ASTM International (ASTM):
a. E96 Test Methods for Water Vapor Transmission of Materials.
b. D570 Test Method for Water Absorption of Plastics.
c. E154 Test Method for Water Vapor Retarders used in contact with Earth Under Concrete Slabs, on Walls or as Ground Cover.
d. D1004 Test Method for Initial Tear Resistance of Plastic Film and Sheeting.
e. D1938 Test Method for Tear Propagation Resistance of Plastic Film and Thin Sheeting by a Single-Tear Method.
f. D1876 Test Method for Peel Resistance of Adhesives.
g. D1970 Standard Specifications for Self-Adhering Polymer Modified Bituminous Sheet Materials Used as Steep Roofing Underlayment for Ice Dam Protection.
h. D412 Test Methods for Vulcanized Rubber & Thermoplastic Rubbers and Thermoplastic Elastomers – Tension.
i. E2178 Standard Test Method for Air Permeance of Building Materials.
j. E2357 Standard Test Method for Determining Air Leakage of Air Barrier Assemblies.

1.4 SUBMITTALS:

A. Product data: Submit manufacturer’s product data, installation instructions, use limitations and substrate preparation recommendations.

B. Shop drawings showing locations and extent of air and vapor barrier system including details for terminations flashings, penetrations, window and door openings and treatment of substrate joints and cracks.
1. Written documentation demonstrating installers qualifications under the "Quality Assurance" article including reference projects of a similar scope.
2. Samples: Submit representative samples of the following for approval:
a. Self-adhered air barrier membrane.
b. Self-adhered transition membrane.
c. Self-adhered through wall flashing.

C. Warranty: Submit a sample warranty identifying the terms and conditions stated herein.

1.5 QUALITY ASSURANCE:

A. Manufacturer: Air and vapor barrier systems shall be manufactured and marketed by a firm with a minimum of 20 years experience in the production and sales of waterproofing and air barrier products. Manufacturers proposed for use, but not named in these specifications shall submit evidence of ability to meet all requirements specified, and include a list of projects of similar design and complexity completed within the past five years.

B. Installer: The installer shall demonstrate qualifications to perform the work of this Section by submitting the following:
1. List of at least three (3) projects contracted within the past five (5) years of similar scope and complexity to this project carried out by the firm and site supervisor.
2. Installer must show evidence of adequate equipment and trained field personnel to successfully complete the project in a timely manner.

C. Materials: For each type of material required for the work of this section, provide primary materials that are the products of one manufacturer.

D. Pre-installation conference: A pre-installation conference shall be held prior to commencement of field operations to establish procedures to maintain optimum working conditions and to coordinate this work with related and adjacent work. Agenda for meeting shall include but not be limited to the following:
1. Review of submittals.
2. Review of surface preparation, minimum curing period and installation procedures.
3. Review of special details and flashings.
4. Sequence of construction, responsibilities and schedule for subsequent operations.
5. Review of mock-up requirements.
6. Review of inspection, testing, protection and repair procedures.

E. Mock-up:
1. Prior to installation of the air and vapor barrier system, provide a field-constructed mock-up to verify details and tie-ins and to demonstrate the required quality of materials and installation.
2. Construct a typical exterior wall section, 8 feet long and 8 feet wide, incorporating back-up wall, cladding, window and doorframe and sill, insulation, flashing and any other critical junction (roof, foundation, etc).
3. Allow 24 hours for examination and testing of mock-up before proceeding with air and vapor barrier work.
4. Acceptable mock-up may remain as part of the work.
5. Examination and testing: Cooperate and coordinate with Owner’s testing agency. Do not cover installed air and vapor barrier membrane until it has been tested and approved.

1.6 DELIVERY, STORAGE AND HANDLING:

A. Deliver materials and products in labeled packages. Store and handle in strict compliance with manufacturer's instructions, recommendations and material safety data sheets. Protect from damage from sunlight, weather, excessive temperatures and construction operations. Remove damaged material from the site and dispose of in accordance with applicable regulations.

B. Do not double-stack pallets of fluid applied membrane components on the job site. Provide cover on top and all sides, allowing for adequate ventilation.

C. Protect fluid-applied membrane components from freezing and extreme heat.

D. Sequence deliveries to avoid delays, but minimize on-site storage.

1.7 PROJECT CONDITIONS:

A. Perform work only when existing and forecasted weather conditions are within the limits established by the manufacturer of the materials used. Proceed with installation only when the substrate construction and preparation work is complete and in condition to receive the air and vapor barrier membrane.

1.8 WARRANTY:

A. Submit manufacturer's warranty that air and vapor barrier and accessories are free of defects at time of delivery and are manufactured to meet manufacturer's published physical properties and material specifications.
   1. Warranty period: Five years from date of completion of the air and vapor barrier membrane installation.

PART 2 - PRODUCTS

2.1 MANUFACTURERS:

A. Acceptable manufacturers:
   1. Basis of design: Grace Construction Products, Perm-A-Barrier Wall Membrane.
   2. Carlisle Coatings & Waterproofing Inc.; CCW-705.
   3. Henry Company; Blueskin SA.
   4 Meadows, W. R., Inc.; SealTight Air-Shield.
   5. Tremco Incorporated, an RPM company; ExoAir 110/110LT.

2.2 AIR AND VAPOR BARRIER MEMBRANE:

A. Material: Self-adhered air and vapor barrier material shall be Min. 1 mm (.040") thick membrane comprised of 0.9 mm (0.036") of self-adhesive rubberized asphalt integrally bonded to 0.1 mm (.004") of cross-laminated, high-density polyethylene film. Membrane shall be interleaved with disposable silicone-coated release paper until installed.

B. Performance requirements:

Property	Test Method	Typical Value
Thickness	ASTM D 3767 Method A	1.0 mm (0.040 in.) nominal
Air Permeance at 75Pa (0.3 in. water) Differential Pressure	ASTM E 2178	<0.001 L/(s.m^2) (<0.0002 cfm/ft^2)
Assembly Air Permeance at 75Pa (0.3 in. water) Differential Pressure	ASTM E 2357	<0.004 L/s*m^2 (<0.0008 cfm/ft^2)
Water Vapor Permeance	ASTM E 96, Method B	Less than 2.9 ng/Pa.s.m^2 (0.05 Perms)
Water Absorption: -	ASTM D 570	Max. 0.1% by weight
Puncture Resistance	ASTM E 154	178 N (40 lbs.)
Tear Resistance	Initiation - ASTM D 1004 Propagation - ASTM D1938	Min. 58 N (7.0 lbs.) M.D. Min. 40 N (4.0 lbs.) M.D.
Lap Adhesion at –4°C (25°F)	ASTM D 1876	880 N/m (5.0 lbs./in.) of width
Low Temperature Flexibility	ASTM D 1970	Unaffected to –43°C (-45°F)
Tensile Strength	ASTM D 412, Die C Modified	Min. 2.7 MPa (400 psi)
Elongation, Ultimate Failure of Rubberized Asphalt	ASTM D 412 - Die C	Min. 200%

2.3 TRANSITION MEMBRANE:

A. Basis of design: Grace Perm-A-Barrier Detail Membrane.

B. Description: Min. 1 mm (.040") thick membrane comprised of 0.9 mm (0.036") of self-adhesive rubberized asphalt integrally bonded to 0.1 mm (.004") of cross-laminated, high-density polyethylene film. Membrane shall be interleaved with disposable silicone-coated release paper until installed.

C. Performance requirements:

1. Water vapor transmission: ASTM E 96, Method B: 2.9 ng/m2sPa (0.05 perms) max.
2. Air permeance at 75Pa (0.3 in. water) pressure difference: 0.0006 L/(s.m^2) (0.00012 cfm/ft^2) max.
3. Puncture resistance: ASTM E 154: 178 N (40 lbs.) min.
4. Lap adhesion at –4°C (25°F), ASTM D 1876: 880 N/m (5.0 lbs./in.) of width min.
5. Low temperature flexibility, ASTM D 1970: Unaffected to –43°C (-45°F).

6. Tensile strength, ASTM D 412, Die C Modified: min. 2.7 MPa (400 psi).
7. Elongation, ultimate failure of rubberized asphalt, ASTM D 412 Die C: min. 200%.

2.4 TRANSITION ALUMINUM MEMBRANE:

A. Basis of design: Grace Perm-A-Barrier Aluminum Flashing.

B. Description: 0.9 mm (35 mils) of self-adhesive rubberized asphalt integrally bonded to 0.1 mm (5 mil) of aluminum film to provide a min. 1.0 mm (40 mil) thick membrane. Membrane shall be interleaved with disposable silicone-coated release paper until installed.

C. Performance requirements:
1. Water Absorption, ASTM D570: max 0.1% by weight.
2. Puncture resistance, ASTM E154: 355N (80 lbs) min.
3. Lap adhesion at -4ºC (25ºF), ASTM D1876 Modified: 880 N/m (5.0 lbs./in.) of width.
4. Low temperature flexibility, ASTM D1970 Modified: Unaffected to -26ºC (-15ºF).
5. Tensile strength, ASTM D412, Die C Modified: min. 4.1 MPa (600 Psi).
6. Elongation, ultimate failure of rubberized asphalt: ASTM D412, Die C Modified: min. 200%.

2.5 FLEXIBLE MEMBRANE THROUGH-WALL FLASHING:

A. Basis of design: Grace Perm-A-Barrier Wall Flashing.

B. Description: Min. 1 mm (.040") thick membrane comprised of 0.8 mm (0.032") of self-adhesive rubberized asphalt integrally bonded to 0.2 mm (.008") of cross-laminated, high-density polyethylene film. Membrane shall be interleaved with disposable silicone-coated release paper until installed.

C. Performance requirements:
1. Water Vapor Transmission, ASTM E 96, Method B: 2.9 ng/m2sPa (0.05 perms) max.
2. Water absorption, ASTM D 570: max. 0.1% by weight.
3. Puncture resistance, ASTM E 154: 356 N (80 lbs.) min.
4. Tear resistance:
   a. Initiation ASTM D 1004: Min. 58 N (13.0 lbs.) M.D.
   b. Propagation ASTM D 1938: Min. 40 N (9.0 lbs.) M.D.
5. Lap Adhesion at -4ºC (25ºF), ASTM D 1876: 880 N/m (5.0 lbs./in.) of width.
6. Low temperature flexibility, ASTM D 1970: Unaffected to -43ºC (-45ºF).
7. Tensile strength, ASTM D 412, Die C Modified: Min. 5.5 MPa (800 psi).

8. Elongation, ultimate failure of rubberized asphalt, ASTM D412, Die C: Min. 200%.

2.6 AIR & VAPOR BARRIER ACCESSORIES:

A. Primer:
1. Basis of design: Grace Perm-A-Barrier WB Primer.
2. Characteristics:
a. Water-based primer which imparts an aggressive, high tack finish on the treated substrate.
b. Flash Point: No flash to boiling point.
c. Solvent Type: Water.
d. VOC Content: Not to exceed 10 g/l.
e. Application temperature: -4°C (25°F) and above.
f. Freezing point (as packaged): -7°C (21°F).

B. Sealant:
1. Basis of design: Grace Bituthene Liquid Membrane.
2. Type: Two-part, elastomeric, trowel grade material designed for use with self-adhered membranes and tapes; 10 g/l max. VOC Content.

C. Optional primers:
1. Description:
a. Basis of design: Grace Perm-A-Barrier Primer Plus.
b. Type" Water-based primer which imparts an aggressive, high tack finish on the treated substrate; 1 g/l max. VOC Content.
2. Description:
a. Basis of design: Grace Perm-A-Barrier Liquid Part B.
b. Type: High tack water based primer; 10 g/l max. VOC content.
3. Description:
a. Basis of design: Grace Bituthene Primer B2 LVC.
b. Type: High tack low VOC solvent based primer; <200 g/l max. VOC content.
4. Description:
a. Basis of design: Grace Bituthene Primer B2.
b. Type: High tack solvent based primer; 440 g/l max. VOC content.

PART 3 - EXECUTION

3.1 EXAMINATION:
A. Examine conditions of substrates and other conditions under which this work is to be performed and correct circumstances detrimental to the proper completion of the work. Do not proceed with work until unsatisfactory conditions are corrected.

3.2 PREPARATION:

A. Refer to manufacturer's literature for requirements for preparation of substrates. Surfaces shall be sound and free of voids, spalled areas, loose aggregate and sharp protrusions. Remove contaminants such as grease, oil and wax from exposed surfaces. Remove dust, dirt, loose stone and debris. Use repair materials and methods that are acceptable to manufacturer of the fluid-applied waterproofing.

B. Exterior sheathing panels: Ensure that the boards are sufficiently stabilized with corners and edges fastened with appropriate screws in accordance with exterior sheathing manufactures written instructions.

C. Masonry substrates: Apply air and vapor barrier over concrete block and brick with smooth and flush mortar joints. Fill all voids and holes, particularly in the mortar joints, with a lean mortar mix, non-shrinking grout or parge coat.

D. Related materials: Treat construction joints and install flashing as recommended by air barrier manufacturer.

3.3 INSTALLATION:

A. Refer to manufacturer's product data for recommendations on installation.

B. Apply air barrier membrane to achieve a continuous air barrier according to air barrier manufacturer's product data.

C. Application of self-adhered air barrier membrane:
1. Install air and vapor barrier to dry surfaces at air and surface temperatures of –4°C (25°F) and above in accord with manufacturer's product data, at locations indicated on drawings.
2. Prime substrate to receive air barrier membrane as required per manufacturer' product data.
3. Precut pieces of air and vapor barrier into easily handled lengths.
4. Remove silicone-coated release paper and position membrane carefully before placing length horizontally against the surface.
5. Begin installation at the base of the wall placing top edge of membrane immediately below any masonry reinforcement or ties protruding from substrate.
6. When properly positioned, place against surface by pressing firmly into place. Roll membrane with extension-handled countertop roller immediately after placement.
7. Overlap horizontally adjacent pieces 50 mm (2 in.) and roll seams.
8. Subsequent sheets of membrane applied above shall be positioned immediately below masonry reinforcement or ties. Bottom edge shall be

slit to fit around reinforcing wires or ties, and membrane shall overlap the membrane sheet below by 50 mm (2 in.). Roll firmly into place.

9. Seal around masonry reinforcing or ties and all penetrations with termination mastic.
10. Continue the membrane into all openings in the wall, such as doors, windows, etc., and terminate at points that will prevent visibility from interior.
11. Coordinate the installation of air and vapor barrier with roof installer to ensure continuity of membrane with rooftop air and vapor membrane.
12. At end of each working day seal top edge of air and vapor barrier to substrate with termination mastic.
13. Do not allow the rubberized asphalt surface of the air & vapor barrier membrane to come in contact with polysulfide sealants, creosote, uncured coal tar products or EPDM.
14. Do not expose air and vapor barrier membrane to sunlight for more than thirty days prior to enclosure.
15. Inspect installation prior to enclosing and repair punctures, damaged areas and inadequately lapped seams with a patch of the membrane sized to extend 150 mm (6") in all directions from the perimeter of the affected area.

D. Application of transition membrane:

1. Prime substrate to receive transition membrane as required in accord with manufacturer's product data.
2. Apply transition membrane with a minimum overlap of 75mm (3") onto each surface at all beams, columns and joints as indicated on drawings.
3. Tie in to window and door frames, spandrel panels, roof and floor intersections and changes in substrate.
4. Use pre-cut, easily handled lengths for each location.
5. Remove silicone-coated release paper and position membrane flashing carefully before placing it against the surface.
6. When properly positioned, place against surface by pressing firmly into place by hand roller.
7. Overlap adjacent pieces 50 mm (2 in.) and roll all seams with a hand roller.
8. Seal top edge of flashing with termination mastic.
9. When transition flashing is pre-installed prior to application of fluid applied membrane, apply transition flashing as above. Spray or trowel a continuous uniform film of Fluid Membrane at min. 60 mils (1.5 mm or .060 in.) dry film thickness using multiple, overlapping passes, with a minimum overlap of 75 mm (3") onto transition flashing. For sill condition, spray or trowel fluid membrane onto pre-installed sill flashing and onto horizontal section of sill.

E. Application of flexible membrane wall flashing:

1. Prime substrate to receive wall flashing as required per manufacturer's product data.

2. Precut pieces of flashing to easily handled lengths for each location.
3. Remove silicone-coated release paper and position flashing carefully before placing it against the surface.

F. When properly positioned, place against surface by pressing firmly into place by hand roller. Fully adhere flashing to substrate to prevent water from migrating under flashing.
1. Overlap adjacent pieces 50 mm (2") and roll all seams with a hand roller.
2. Trim bottom edge 13 mm (1/2") back from exposed face of the wall. Flashing shall not be permanently exposed to sunlight.
3. At heads, sills and all flashing terminations, turn up ends a minimum of 50 mm (2") and make careful folds to form an end dam, with the seams sealed.
4. Seal top edge of flashing with termination mastic.
5. Do not allow the rubberized asphalt surface of the flashing membrane to come in contact with poly-sulfide sealants, creosote, uncured coal tar products or EPDM.

3.4 PROTECTION AND CLEANING:

A. Remove any masking materials after installation. Clean any stains on materials that would be exposed in the completed work using procedures as recommended by manufacturer.
1. Protect wall membrane from permanent exposure to sunlight.
2. Schedule work to ensure that the wall membrane system is covered as soon as possible after installation. Protect wall membrane system from damage during subsequent operations. If the wall membrane system cannot be covered within 30 days after installation, apply temporary UV protection such as dark plastic sheet or tarpaulins.

END OF SECTION

SECTION 07410

METAL WALL PANELS

PART 1 - GENERAL

1.1 SUMMARY:

A. Work of this section includes:
1. Metal wall panels.
2. Subgirt system.
3. Miscellaneous trim, flashing, closures, drips and accessories.
4. Sealant closure methods.
5. Fastening devices.

B. Related work specified elsewhere:
1. Sheet metal flashing and trim.
2. Rough carpentry.
3. Structural steel.
4. Cold formed metal framing.
5. Concrete.
6. Metal roof panels.
7. Gutters and downspouts.

1.2 SUBMITTALS:

A. Shop drawings: Show layout of panels, anchorage details, joint details, subgirt locations, reveals, closures, trim, flashing, interface with adjoining systems and accessories. Show details for weatherproofing, terminations and penetrations of metal wall panels. Include elevations of the work.

B. Product data: Indicate product description, material types and thicknesses, girt spacing, fabrication and installation details.

C. Samples: Submit 2'-0" long by full width samples of wall panel with specified finish.

D. Design calculations: Submit for Architect's information only. Submit design calculations bearing the seal of a professional engineer licensed in the State of Georgia. Indicate that engineer has reviewed shop drawings.

E. Certification: Submit written certification that fluoropolymer coating complies with specified performance requirements.

1.3 QUALITY ASSURANCE:

A. Applicable standards as referenced herein:
1. Aluminum Association (AA), "Aluminum Sheet Metal Work in Building Construction."

2. American Architectural Manufacturer's Association (AAMA), standards as referenced herein.
3. ASTM International (ASTM), standards as referenced herein.
4. Sheet Metal and Air Conditioning Contractors National Association, Inc. (SMACNA), "Architectural Sheet Metal Manual," Sixth Edition, 2003.

B. Manufacturer qualifications: Manufacturer shall have a minimum of ten (10) years experience in the production of metal wall panels. Manufacturer shall demonstrate past experience with examples of projects of similar type and exposure.

C. Installer qualifications: Installer shall be authorized by the manufacturer and the work shall be supervised by a person having successfully completed a manufacturer training seminar regarding proper installation of the specified product.

D. Preinstallation meetings:
1. Preinstallation Conference: Conduct conference at project site.
2. Meet with Owner, Architect, Owner's insurer if applicable, metal panel Installer, metal panel manufacturer's representative, structural-support Installer, and installers whose work interfaces with or affects metal panels, including installers of doors, windows, and louvers.
3. Review and finalize construction schedule and verify availability of materials, Installer's personnel, equipment, and facilities needed to make progress and avoid delays.
4. Review methods and procedures related to metal panel installation, including manufacturer's written instructions.
5. Examine support conditions for compliance with requirements, including alignment between and attachment to structural members.
6. Review flashings, special siding details, wall penetrations, openings, and condition of other construction that affect metal panels.
7. Review governing regulations and requirements for insurance, certificates, and tests and inspections if applicable.
8. Review temporary protection requirements for metal panel assembly during and after installation.
9. Review of procedures for repair of metal panels damaged after installation.
10. Document proceedings, including corrective measures and actions required, and furnish copy of record to each participant.

E. Mockups: Build mockups to verify selections made under Sample submittals and to demonstrate aesthetic effects and set quality standards for fabrication and installation.
1. Build mockup of typical metal panel assembly including corner, soffits, supports, attachments, and accessories.
2. Water-spray test: Conduct water-spray test of metal panel assembly mockup, testing for water penetration according to AAMA 501.2.
3. Approval of mockups does not constitute approval of deviations from the Contract Documents contained in mockups unless Architect specifically approves such deviations in writing.

4. Subject to compliance with requirements, approved mockups may become part of the completed Work if undisturbed at time of Substantial Completion.

1.4 DELIVERY, STORAGE AND HANDLING:

A. Store materials off ground, under cover. Protect from damage and deterioration.

B. Provide protective interleaving between contact areas of exposed surfaces to prevent abrasion during shipment, storage and handling.

C. Handle materials to prevent damage to surfaces, edges and ends of sheet metal items. Damaged material shall be rejected and removed from site.

1.5 WARRANTY:

A. Panel warranty: Manufacturer's standard form in which manufacturer agrees to repair or replace components of metal panel systems that fail in materials or workmanship within two years from date of Substantial Completion.
   1. Failures include, but are not limited to, the following:
      a. Structural failures including rupturing, cracking, or puncturing.
      b. Deterioration of metals and other materials beyond normal weathering.

B. Finish warranty: Warrant fluoropolymer coating to remain free of checking, crazing, peeling, chalking or fading for a period of 20 years, beginning at Date of Substantial Completion.

PART 2 -PRODUCTS

2.1 ALUMINUM WALL PANELS:

A. Acceptable manufacturers; subject to compliance with specified requirements:
   1. Basis of design: Morin, a Kingspan Group Company.
   2. AEP Span; a BlueScope Steel company.
   3. ATAS International, Inc.
   4. Berridge Manufacturing Company.
   5. CENTRIA Architectural Systems.
   6. Fabral.
   7. Flexospan Steel Buildings, Inc.
   8. MBCI; a division of NCI Building Systems, L.P.
   9. Metal-Fab Manufacturing, LLC
   10. Petersen Aluminum Corporation.

B. Basis of design: Morin, Concealed Fastener Wall Panels, W12.

2.2 PERFORMANCE REQUIREMENTS:

A. Structural performance: Provide metal wall panel systems designed to resist the following.

1. Wind loads: Determine loads based on the minimum uniform design wind pressures indicated on drawings.
2. Deflection limits: Metal wall panel assemblies shall withstand horizontal deflections no greater than L/180 of the span.

B. Thermal movements: Allow for thermal movements from ambient and surface temperature changes by preventing buckling, opening of joints, overstressing of components, failure of joint sealants, failure of connections, and other detrimental effects. Base calculations on surface temperatures of materials due to both solar heat gain and nighttime-sky heat loss.
1. Temperature change (Range): 120 deg F, ambient; 180 deg F, material surfaces.

2.3 WALL PANEL MATERIALS:

A. Aluminum:
1. Coil stock meeting ASTM B209; Alloy and temper as required for forming operations.
2. Gauge: 0.040".

2.4 CONCEALED FASTENER WALL PANELS:

A. Wall panel description:
1. Panel width: 12".
2. Profile: Match Morin W-12 Horizontal.
3. Texture: Smooth.

2.5 INSULATION:

A. Refer to Section 07210 - Thermal Insulation.

2.6 ACCESSORIES:

A. Wall panel accessories: Provide accessories as required for a complete installation. Accessories shall be as indicated on approved shop drawings and in accord with manufacturer's product data.
1. Metal profile closure strips: Shall be fabricated from same gauge, material and finish as metal panel.
2. Swedged ends: Factory crimped end laps.

B. Trim:
1. Fabricate trim from same material and material thickness as wall panels. Finish to match metal wall panels.
2. Locations include, but are not limited to the following: Drips, sills, jambs, corners, framed openings, parapet caps, reveals and fillers.

C. Metal framing:
1. General: ASTM A653, G60 hot-dip galvanized.
a. Hat-shaped, rigid furring channels:
1) Nominal thickness: 0.040".

2) Depth: As indicated on drawings.

b. Cold-rolled furring channels: Minimum 1/2" wide flange.
   1) Nominal thickness: 0.064".
   2) Depth: As indicated on drawings.

c. Furring brackets: Adjustable, corrugated-edge type of steel sheet with 0.040" nominal thickness.

d. Tie wire: ASTM A641, Class 1 zinc coating, soft temper, 0.062-inch diameter wire, or double strand of 0.048" diameter wire.

D. Panel sealant:
   1. Joint sealant: ASTM C920 as recommended in writing by metal wall panel manufacturer.
   2. Butyl-rubber-based, solvent-release sealant: ASTM C1311.

2.7 FABRICATION:

A. Fabricate work in accord with approved shop drawings and applicable standards. Form sheet metal work with clear, sharp and uniform arrises. Hem exposed edges.
   1. Panels shall be factory formed. Field formed panels are not acceptable.
   2. Form metal wall panels to lap and interconnect with edges of adjacent panels which are then mechanically attached through panel to supports using concealed fasteners.
   3. Provide linear sheet metal items in minimum 10'-0" sections, except as otherwise noted. Form flashing using single pieces for the full width. Provide shop-fabricated, mitered and joined corners, with minimum 2'-0" long legs.
   4. Fabricate metal wall panels to eliminate condensation on interior side of panel and with joints between panels designed to form weathertight seals.

B. Metal wall panels shall have factory-installed sealant at panel joints to provide a tight seal and minimize noise from movements within panel assembly.

C. Trim accessories: Provide manufacturer’s standard extruded aluminum trim.

D. Provide mitered inside and outside corners. Corners shall be fabricated only by panel manufacturer.

E. Soffit panels shall be perforated or non-perforated as indicated on drawings.

2.8 FINISH:

A. Finish on exposed exterior surfaces:
   1. Three coat, shop-applied, baked-on, fluoropolymer coating system based on minimum 70% Arkema Group, Kynar 500 or Solvay Solexis, Inc., Hylar 5000 resin (Polyvinylidene fluoride, PVDF), formulated by a licensed manufacturer and applied by manufacturer's approved applicator to meet AAMA 2605-05.
   2. Color: Custom (non-exotic) color as selected by Architect.

B. Finish on unexposed surfaces: Mill finish for aluminum.

PART 3 - EXECUTION

3.1 EXAMINATION:

A. Provide field measurements to manufacturer as required to achieve proper fit of the metal wall panels to building envelope. Measurements shall be provided in a timely manner so that there is no impact to construction or manufacturing schedule.

B. Supporting steel: All structural supports required for installation of panels shall be by others. Support members shall be installed within the following tolerances:
1. Plus or minus 1/8" in 5'-0" in any direction along plane of framing.
2. Plus or minus 1/4" cumulative in 20'-0" in any direction along plane of framing.
3. Plus or minus 1/2" from framing plane on any elevation.
4. Plumb or level within 1/8" at all changes of transverse for performed corner panel applications.
5. Verify that bearing support has been provided behind vertical joints of horizontal panel systems and vertical joints of horizontal panel systems. Width of support shall be as recommended by manufacturer.

C. Examine individual panels upon removing from the bundle; notify manufacturer of panel defects. Do not install defective panels.

3.2 INSTALLATION:

A. Install work in accord with the drawings, approved shop drawings and within specified erection tolerances.
1. Work shall be true to line without buckling, creasing, warp or wind in finished surfaces.
2. Cutting and fitting of panels shall be neat, square and true. Torch cutting is prohibited.

B. Isolate dissimilar materials from metals with bituminous paint, tape or building paper. Use gaskets, fasteners and neoprene washers where required to prevent corrosive action between fastener, substrate and panels.

C. Coordinate sheet metal flashing and trim work at roof surfaces with roofing work to provide weathertight conditions at roof terminations.
1. Refer to Sheet Metal Flashing and Trim section.
2. Place trim and trim fasteners only as indicated per details on the approved shop drawings.
3. Apply sealant tape at trim, in accord with manufacturer’s details and approved shop drawings, for weathertight installation.

D. Install lap sealants or tapes in accord with approved shop drawings and manufacturer's product data. Comply with sealant manufacturer's product data for installation and curing.

E. Secure sheet metal items using continuous cleats, clips and fasteners as indicated. No exposed face fastening shall be performed.

F. Form joints in linear sheet metal to allow for 1/2" minimum expansion at 20'-0" o. c., maximum, and 8'-0" from corners. Provide 6" wide cover plate and 1'-0" wide backup plate at intersections. Form plates to profile of sheet metal items.

G. At joints in linear sheet metal items, set sheet metal over backup plate and set cover plate over sheet metal in two beads of silicone sealant, 1/4" in diameter, minimum. Extend sealant over metal surfaces. Mate components for positive seal. Allow no sealant to migrate onto exposed surfaces.

H. Allowable erection tolerances; maximum variation from plumb and level:
   1. In lines and surfaces of walls:
      a. 1/4" in 10'-0".
      b. 3/8" in any story or 20'-0" maximum.
      c. 1/2" in 40'-0" or more.

   2. For external corners, expansion joints and other conspicuous lines:
      a. 1/4" in any story or 20'-0" maximum.
      b. 3/8" in 40'-0" or more.

I. Maintain prefinished surfaces in clean condition until Date of Substantial Completion. Repair or replace damaged panels; touch up damages in prefinished surfaces to be indistinguishable in the finished work.

END OF SECTION

SECTION 07610

METAL ROOF PANELS

PART 1 - GENERAL

1.1 SUMMARY:

A. Work of this section includes preformed metal, structural roofing system complete with perimeter and penetration flashing, closures, gutters and downspouts, and sub-purlins, insulation, protection board and underlayment.

B. Related work specified elsewhere:
1. Structural steel.
2. Metal joists.
3. Metal roof decks.
4. Metal fabrications.
5. Rough carpentry.
6. Sheet metal flashing and trim.

1.2 SUBMITTALS:

A. Shop drawings: Shall be prepared by or approved by manufacturer.

6. Indicate roof system with flashings and accessories in plan and elevation; sections and details at full scale.
7. Indicate metal thicknesses and finishes, panel lengths, joining details, anchorage details, flashings and special fabrication provisions for termination and penetrations, girt locations, expansion provisions and supports.
8. Indicate relationships with adjacent and interfacing work.
9. Indicate location of penetrations with relation to rib placement.

B. Product data: Include manufacturer's detailed material and system description, installation instructions, engineering performance data and finish specifications.

C. Intent to warrant: Submit an intent to warrant, executed by authorized representative of metal roof manufacturer, indicating that manufacturer has reviewed drawings, specifications and conditions affecting the work, and proposes to provide warranties as referenced herein without further stipulation.

D. Certification:
1. Submit certification that proposed applicator is approved for warranted work by metal roof manufacturer.
2. Submit certification from authorized representative of metal roof manufacturer, stating that surfaces and conditions are acceptable for purpose of providing specified warranty.
3. Submit certification from authorized representative of metal roof manufacturer, stating that proposed roof system meets design and performance criteria, and specified requirements.
4. Submit certification from authorized representative of metal roof manufacturer that specified metal roof systems have been satisfactorily

installed on projects of similar scope and size and have been completed for five years.

5. Certification: Submit written certification that fluoropolymer coating complies with specified performance requirements.
6. Submit certification from manufacturer that fabricator/installer is approved and certified to fabricate/install manufacturer warranted metal roof systems as specified herein.

E. Design calculations: Submit design calculations, indicating compliance with specified performance criteria. Indicate fastener types and spacings. Design calculations shall bear the seal of a professional Engineer licensed in the State of Georgia. Indicate that Engineer has reviewed shop drawings.

F. Test reports:
1. Submit reports by an independent testing laboratory to support structural calculations and show compliance with specified performance criteria.
2. Tests shall have been made for substantially identical systems within the ranges of specified performance criteria.
3. If test data is not available or if data does not represent project conditions, Contractor shall be responsible for securing satisfactory tests by an independent testing agency acceptable to Architect, with costs of such testing borne by the Contractor.

G. Samples:
1. Submit samples of panel section, at least 2'-0" in length by full width, indicating thickness, profile, texture and color.
2. Submit samples of panel clips, closures and accessory items.

1.3 QUALITY ASSURANCE:

A. Applicable standards; standards of the following, as referenced herein:
1. American Architectural Manufacturers Association (AAMA).
2. ASTM International (ASTM).
3. National Roofing Contractors Association (NRCA), "Roofing and Waterproofing Manual," Fifth Edition, 2001 with 2003 Update.
4. Sheet Metal and Air Conditioning Contractors National Association (SMACNA), "Architectural Sheet Metal Manual," Sixth Edition, 2003.
5. Society for Protective Coatings (SSPC).
6. Underwriters Laboratories, Inc. (UL).

B. Manufacturer’s qualifications:
1. Metal roof system manufacturer shall have been engaged in the manufacturer of metal roof systems similar to those specified herein for a minimum of ten years.
2. Manufacturer shall submit evidence that his proposed metal roof system as specified herein has been satisfactorily installed on projects of similar scope and size, which have been completed for at least five years.

C. Fabricator/installer qualifications:

1. Fabricator/installer shall be trained and approved by metal roof system manufacturer, with trained supervisory personnel observing and directing the work.
2. If required, proposed fabricator/installer shall submit evidence of financial responsibility.
3. Architect reserves the right to inspect fabrication facilities in determining qualifications.
4. Fabricator/installer shall have satisfactorily installed metal roof systems, similar in size and scope to the specified system, which have been completed for five years.
5. Fabricator/installer shall be approved and certified to install metal roof systems which can be warranted by metal roof manufacturer.

D. Preinstallation meetings: Prior to beginning metal roof work, hold a pre-roofing conference to review work to be accomplished.
1. Contractor, Architect, metal roofing subcontractor, metal roof system manufacturer's representative and all subcontractors who have equipment penetrating roof or whose work involves access to roof shall be present.
2. Contractor shall notify Architect and other attending parties at least seven days prior to time for conference.
3. Contractor shall record minutes of meeting and shall distribute copies of minutes to attending parties.

E. Mock-up: Build mockups to verify selections made under Sample submittals and to demonstrate aesthetic effects and set quality standards for fabrication and installation.
1. Build mockup of typical metal panel assembly including corner, supports, attachments, and accessories.
2. Approval of mockups does not constitute approval of deviations from the Contract Documents contained in mockups unless Architect specifically approves such deviations in writing.
3. Subject to compliance with requirements, approved mockups may become part of the completed Work if undisturbed at time of Substantial Completion.

1.4 DELIVERY, STORAGE AND HANDLING:

A. Protect components during fabrication, shipment, storage, handling and erection from mechanical abuse, stains, discoloration and corrosion.

B. Maintain strippable plastic protective film on finished surfaces until panels are erected.

C. Handle materials to prevent damage to surfaces, edges and ends of roofing sheets and sheet metal items. Damaged material shall be rejected and removed from site.

D. Protect panels from wind-related damages.

E. Inspect materials upon delivery. Reject and remove physically damaged or marred material from project site.

F. Do not overload roof structure with stored materials. Do not permit material storage or traffic on completed roof surfaces.

1.5 PROJECT/SITE CONDITIONS:

A. Protection:
1. Provide protection or avoid traffic on completed roof surfaces.
2. Avoid overloading roof with stored materials.
3. Support no roof-mounted equipment directly on roofing system.

B. Ascertain that work of other trades which penetrates roof or is to be made watertight by roof is in place and approved prior to installation of roofing.

1.6 WARRANTIES:

A. Special warranty: Manufacturer's standard form in which manufacturer agrees to repair or replace components of metal panel systems that fail in materials or workmanship within two years from date of Substantial Completion.
1. Failures include, but are not limited to, the following:
a. Structural failures including rupturing, cracking, or puncturing.
b. Deterioration of metals and other materials beyond normal weathering.

B. Finish warranty:
1. Manufacturer's twenty year finish warranty covering refinishing of fluoropolymer coating due to checking, crazing, peeling, chalking or fading.
2. Manufacturer's comprehensive twenty year warranty covering roofing system installation and watertightness with no dollar limit.
3. Warranties shall commence on Date of Substantial Completion.

PART 2 - PRODUCTS

2.1 METAL ROOF SYSTEM:

A. Acceptable products; subject to compliance with specified requirements.
1. Basis of design: Morin, a Kingspan Group Company, SRR System.
2. Firestone Metal Products, Una-Clad UC-6 Double Lock.
3. Innovative Metals Co. (IMETCO), Series 300.
4. Merchant & Evans, Inc., Zip-Rib.

B. Materials:
1. Panel material: Minimum 0.040" thickness aluminum alloy meeting ASTM B209-07.
2. Flashing and flat stock material: Minimum 0.040" thickness aluminum of same type and finish as panels.

C. Characteristics:

1. Configuration: Standing or batten-lock seams incorporating mechanically interlocked, concealed anchor clips allowing thermal movement, and of configuration which will prevent entrance or passage of water.
2. Seam height: 1-1/2", minimum.
3. Nominal panel width: 1'-4".
4. Panel surface: Smooth.
5. Panel length: Factory formed, full length without joints.
6. Seam cap: Provide shop-fabricated cap for seams where cut for bends. Cap shall match seam, with overlapping, sealed bend.
7. Replaceability: Individual panels shall be removable for replacement without removing adjacent panels.

D. Accessories:
1. Anchor clips: Stainless steel designed to receive recessed mechanical anchors into structural support elements, girts or blocking. Clips shall allow free thermal expansion and contraction movement, relative to the structure, within the full temperature ranges specified.
2. Anchors: Stainless steel screws designed to meet structural loading requirements.
3. Exposed fasteners: Stainless steel self-tapping hexagonal head screws with neoprene sealing washers, #14 size, minimum; head finished to match panel color where exposed.
4. Closures: Manufacturer's standard closed cell foam or sheet metal "Z" closure:
   a. Closed cell foam shall meet ASTM D1056-07 or ASTM D3575-08; factory-cut foam shall be enclosed in metal channels matching panels when used at hip and ridge.
   b. "Z" closures shall be same material as panels, manufacturer's standard detail, with continuous sealant bead at edges, ends and contact area with adjacent materials.
5. Panel joint sealant: Specified silicone sealant or non-curing polyisobutylene tape of thickness to adhere to both surfaces being joined.
6. Provide miscellaneous accessories for complete installation. Accessories shall be furnished by roofing system manufacturer.
7. Sub-purlins: Manufacturer's standard type formed of minimum 16 ga. galvanized steel; sizes as required.

2.2 METAL FINISH:

A. Finish on exposed surfaces:
1. Three coat, shop-applied, baked-on, fluoropolymer coating system based on minimum 70% Arkema Group, Kynar 500 or Solvay Solexis, Inc., Hylar 5000 resin (Polyvinylidene fluoride, PVDF), formulated by a licensed manufacturer and applied by manufacturer's approved applicator to meet AAMA 2605-05.
2. Color: Custom (Non-Exotic) color to match Architect’s sample.

B. Finish on unexposed surfaces: Mill finish.

C. Protective surfacing: Provide strippable plastic film covering on finished surfaces to prevent abrasion during fabrication, storage and handling.

2.3 ACCESSORY PRODUCTS:

A. Metal for trim and gutters and downspouts:
1. Panel material: Minimum 0.040" thickness aluminum alloy meeting ASTM B209-07.
2. Finish: Match roof panels in color and finish.

B. Silicone sealant for concealed joints:
1. Acceptable products:
a. Dow Corning Corp., #795.
b. Pecora Corp., #895.
c. Tremco, Inc., an RPM Company, SpecTrem 2.
2. Type: One-part silicone rubber; meeting ASTM C920-10, Type S, Grade NS, Class 25.

C. Subgirts: Roll-formed, structural steel conforming to ASTM A653-09a, Coating Designation G-90, galvanized with 1.25 oz. zinc per sq. ft.; gauges and sizes as required by manufacturer's structural analysis.

D. Bituminous coating for separation of dissimilar materials: Cold-applied, asphalt mastic meeting SSPC-PS 9.01, minimum 30 mils thickness.

E. EPDM rubber flashing for penetrations and equipment legs: EPDM boot with aluminum base flange with hose clamp at top of boot.

F. Waterproof underlayment:
1. Acceptable products; subject to compliance with specified requirements:
a. Carlisle Coatings and Waterproofing, Inc., WIP 300HT.
b Polyguard Products, Inc., Polyguard Deck Guard HT.
c. Grace Construction Products, Grace Ice & Water Shield HT (High-Temperature)
2. Characteristics:
a. Type: Self-adhering rubberized asphalt sheet complying with ASTM D1970-11.
b. Thickness: Minimum 40 mils when tested in accord with ASTM D3767-03(2008), method A.
c. Tensile strength: 250 psi minimum when tested in accord with ASTM D412-06a.
d. Elongation: 250% when tested in accord with ASTM D412-06a, Die C Modified.
e. Provide primers, sealants and accessories required for a waterproof installation.

2.4 ROOF INSULATION:

A. Isocyanurate roof insulation:

1. Type: Rigid isocyanurate closed-cell foam boards, permanently bonded to glass fiber reinforced cellulosic felt facing sheets, complying with requirements of ASTM C1289-12, Type II, Class I, Grade 2.
2. Face size: Minimum 4'-0" by 4'-0".
3. Total thickness: 3.5”.
4. Long-term thermal resistance (LTTR) R-value in accord with ASTM C1289-12: R-27.5 for total thickness.
5. Fire hazard classification: FM Class I.

B. Protection board:
1. Acceptable manufacturers:
   a. Basis of design: G-P Gypsum, a Georgia-Pacific Company, Densglass Gypsum Board.
   b. Temple-Inland, Inc., GreenGlass Fiber-Glass Faced Gypsum Sheathing.
   c. USG Corporation, Securock Glass-Mat Sheathing Panels.
2. Characteristics:
   a. Composition: Conforming to ASTM C1177-08; noncombustible water-resistant core, essentially gypsum, surfaced with glass mat partially or completely embedded in the core.
   b. Mold resistance: Resistant to mold growth when tested in accord with ASTM D3273-00(2005).
   c. Thickness: As indicated on drawings.

2.5 FABRICATION:

A. Shop fabricate metal roof and flashing components to the maximum extent possible, forming metal work with clear, sharp, straight and uniform bends and arrises. Hem exposed edges of flashings.

B. Forming equipment shall have a minimum of 12 stations.

C. Panels shall be factory tension-leveled.

D. Form flashing components from full single width sheet.
1. Provide shop-fabricated mitered corners, joined using closed-end pop rivets and joint sealant.

E. Fabricate roofing and related sheet metal work in accord with approved shop drawings and applicable standards.

F. Make joints in aluminum sheets using flat-lock seams, 3/4" in width. Fill seams with specified silicone sealant.

G. Provide linear sheet metal items in minimum 10'-0" sections, except as otherwise noted. Form flashing using single pieces for the full width. Provide shop-fabricated, mitered and joined corners, with minimum 2'-0" long legs.

H. SMACNA Manual fabrication requirements:

1. Gutters: Figure 1-2, Style A. Size gutters in accord with Tables 1-1, 1-2, 1-3 and 1-4, and Charts 1-1 and 1-2.
2. Downspouts: Figure 1-32B. Size downspouts in accord with Tables 1-1, 1-2, 1-3 and 1-4, and Charts 1-1 and 1-2.

PART 3 - EXECUTION

3.1 PREPARATION:

A. Examination:

1. Examine alignment and placement of substrates before proceeding with installation of metal roof.
2. Examine alignment and placement of penetrations before proceeding with installation of metal roof.

B. Protection board installation:

1. Install projection board to metal deck using specified mechanical fasteners, in accord with approved shop drawings and in accord with roofing manufacturer’s product data to comply with building code required wind uplift requirements. Bear edges of board on deck ribs.
2. Install protection board over insulation using specified mechanical fasteners, in accord with approved shop drawings and in accord with roofing manufacturer’s product data to comply with building code required wind uplift requirements.
3. Butt edges for snug contact.
4. Install only as much protection board each work period as can be covered by roofing by end of same work period

C. Insulation installation:

1. Install insulation in two layers, with joints staggered between layers. Stagger end joints in adjacent boards. Butt edges for snug contact.
2. Install only as much roof insulation each work period as can be covered by roofing by end of same work period.

D. Install waterproof membrane underlayment at all areas to receive metal roof.

1. Install membrane underlayment fully adhered to protection board in accord with manufacturer's product data.
2. If required, prime surfaces to receive membrane materials. Allow primer to dry until tack-free. Prime only area which can be covered with sheet membrane during work period. Reprime surfaces which are not covered within 24 hours of primer application.
3. Install membrane materials with side and end laps lapped as recommended by product data. Begin installation at low points, lapping succeeding sheets to shed water.
4. Membrane applications shall be fully adhered, smooth, straight and free of blisters, buckles, fishmouths and wrinkles affecting the complete adherence of the membrane. Patch and repair defective work in accord with manufacturer's product data. Replace defective areas.

5. Double membrane at changes in plane by application of a centered membrane strip. Cover strip completely with full width sheet.
6. Seal around protrusions and at terminations in accord with product data.
7. Repair punctures and tears in membrane by patching with membrane material.

3.3 ROOF AND FLASHING INSTALLATION:

A. Install roof and flashings in accord with approved shop drawings and manufacturer's product data, within specified erection tolerances.
   1. Penetrations shall occur in flat of panel.
   2. No rib shall be cut or modified to accommodate penetrations or flashing of penetrations.
   3. Install panels, flashing and trim with finish direction oriented in the same direction.

B. Isolate dissimilar metals and masonry or concrete from metals with bituminous coating. Use gasketed fasteners to prevent corrosive action between fastener, substrate and panels.

C. Exposed fasteners shall be prefinished to match finish of panels and trim. Limit exposed fasteners to extent indicated on shop drawings.

D. Anchorage shall allow for temperature expansion/contraction movement within specified range without stress or elongation of panels, clips or anchors. Attach clips to decking and purlins using self-drilling screws of size and spacing in accord with manufacturer's product data and design calculations to resist specified uplift and thermal movement forces.

E. Seal laps and joints in accord with roof system manufacturer's product data.

F. Coordinate sheet metal flashing and trim work to provide weathertight conditions at roof terminations. Fabricate and install in accord with standards of SMACNA "Architectural Sheet Metal Manual" and NRCA "Construction Details," using continuous cleats at all exposed edges.

G. Provide for temperature expansion/contraction movement of panels at roof penetrations and roof-mounted equipment in accord with system manufacturer's product data and design calculations.
   1. Locate penetrations in flat of panel.
   2. Provide EPDM rubber flashing boots for vents, pipes, stacks, hoses and round legs of equipment supports. Mechanically attach base flange and tighten hose clamp to provide watertight installation.

H. Installed system shall be true to line and plane and free of dents, oilcans and physical defects.

I. Form joints in linear sheet metal to allow for 1/2" minimum expansion at 20'-0" o. c., maximum, and 8'-0" from corners. Provide 6" wide cover plate and 1'-0" wide backup plate at intersections. Form plates to profile of sheet metal item.

J. At joints in linear sheet metal items, set sheet metal over backup plate and set cover plate over sheet metal in two beads of specified silicone sealant, 1/4" in diameter, minimum. Extend sealant over all metal surfaces. Mate components for positive seal. Allow no sealant to migrate onto exposed surfaces.

K. Gutters and downspouts:
   1. Construct with riveted and sealed joints, lapped 1", minimum, in direction of flow. Provide 3/4" minimum expansion joints at 30'-0" o. c., maximum. Form expansion joints in accord with SMACNA Manual, Figure 1-7, butt type.
   2. Hang gutters with high points equidistant from downspouts, evenly sloped toward downspouts. Support gutters in accord with SMACNA Manual, Figure 1-17 for steep sloped roofs.
   3. Secure downspouts to exterior walls at 6'-0" o. c., maximum, using straps and expansion type fasteners in accord with SMACNA Manual, Figure 1-35C. Lap downspout joints 1-1/2", minimum, and seal.

3.4 FIELD QUALITY CONTROL:

A. Applicable erection tolerances; maximum variation from true planes or lines: 1/4" in 20'-0"; 3/8" in 40'-0" or more.

3.5 PROTECTION:

A. Remove damaged work and replace with new, undamaged components.

B. Paint edges where panels are field cut. Touch up using paint furnished by roof panel manufacturer and matching exposed panel surface finish.

C. Remove protective film and clean exposed surfaces of roofing and accessories after completion of installation. Leave in clean condition at Date of Substantial Completion. Touch up minor abrasions and scratches in finish.

END OF SECTION

SECTION 07620

SHEET METAL FLASHING AND TRIM

PART 1 - GENERAL

1.1 SUMMARY:

A. Related work specified elsewhere:
   1. Roofing system, including gutters and downspouts.
   2. Joint sealants.
   3. Flexible flashing.

1.2 SUBMITTALS:

A. Shop drawings: Indicate material types, sizes, shapes, thicknesses, finishes, fabrication details, anchors, connections, expansion joints and relation to adjacent work. Details and profiles shall be drawn at full scale.

B. Product data: Indicate product description, finishes and installation instructions for manufactured products, including interface with adjacent materials and surfaces.

C. Samples; submit as follows:
   1. Anodized aluminum: 6" by 6" samples of anodized aluminum, indicating full range of color to be expected in finish work.
   2. Special finishes: 6" by 6" samples for Architect's color selection.

D. Submittals schedule: Obtain Architect’s acceptance of submittals prior to pre-roofing conference.

1.3 QUALITY ASSURANCE:

A. Applicable standards as referenced herein:

10. Aluminum Association (AA), "Aluminum Sheet Metal Work in Building Construction”.
11. American Architectural Manufacturers Association (AAMA).
12. American National Standard Institute/Single Ply Roofing Institute (ANSI/SPRI), as referenced herein.
13. ASTM International (ASTM).
14. National Roofing Contractors Association (NRCA), "Roofing and Waterproofing Manual", Fifth Edition, 2001 with 2003 Update.
15. Sheet Metal and Air Conditioning Contractors National Association, Inc. (SMACNA), "Architectural Sheet Metal Manual," Sixth Edition, 2003.
16. Society for Protective Coatings (SSPC), standards as referenced herein.

1.4 DELIVERY, STORAGE AND HANDLING:

A. Store materials off ground, under cover. Protect from damage and deterioration.

B. Handle materials to prevent damage to surfaces, edges and ends of sheet metal items. Damaged material shall be rejected and removed from site.

1.5 WARRANTIES:

A. Warrant sheet metal flashing and trim work to be free of defects in materials and workmanship. Warranty period shall be two years beginning at Date of Substantial Completion.

B. Finish warranty: Warrant fluoropolymer coating to remain free of checking, crazing, peeling, chalking or fading for a period of twenty years, beginning at Date of Substantial Completion.

PART 2 - PRODUCTS

2.1 SHEET METAL MATERIALS:

1. Aluminum: 3003-H14 alloy, meeting ASTM B209-07.
   1. Miscellaneous sheet metal flashing and trim: 0.063" thickness, unless indicated otherwise.

B. Fasteners: Stainless steel.
   1. Nails: Flat head, needle point, not less than 12 ga. and of sufficient length to penetrate substrate 1" minimum.
   2. Expansion shields: Lead or bronze sleeves.
   3. Screws: Self-tapping type, with round heads.
   4. Bolts: Furnished complete with nuts and washers.
   5. Rivets: Round head, solid type.
   6. Blind clips and cleats: Same gauge as sheet metal.

C. Silicone sealant for concealed joints:
   1. Acceptable products:
      a. Dow Corning Corp., #795.
      b. Pecora Corp., #895.
      c. Tremco, Inc., an RPM Company, SpecTrem 2.
   2. Type: One-part silicone rubber; meeting ASTM C920-10, Type S, Grade NS, Class 25.

D. Bituminous coating for separation of dissimilar materials: Cold-applied, asphalt roofing cement meeting SSPC-PS 9.01, minimum 30 mils thickness.

2.2 FINISHES:

A. Fluoropolymer coating finish:

1. Three coat, shop-applied, baked-on fluoropolymer coating system based on minimum 70% Arkema Group, Kynar 500 or Solvay Solexis, Inc., Hylar 5000 resin (Polyvinylidene fluoride, PVDF), formulated by a licensed manufacturer and applied by manufacturer's approved applicator to meet AAMA 2605-05.
2. Color: Custom (Non-Exotic) color to match Architect's sample.
3. Finish on unexposed surfaces: Mill finish.
4. Work to receive fluoropolymer coating includes sheet metal flashing and trim exposed to view from building elevations.

2.3 SHEET METAL FABRICATION:

A. Fabricate sheet metal work in accord with approved shop drawings and applicable standards. Form sheet metal work with clear, sharp and uniform arrises. Hem exposed edges. Form curved components to radius indicated on the drawings, without deformation in metal.

B. In aluminum sheets less than 0.040" thick, make joints using flatlock seams, 3/4" in width. Fill seams with exterior sealant. Make joints in thicker sheets using seaming or by Tungsten Arc Welding (TIG) or Gas Metal Arc Welding (MIG) processes, using appropriate filler alloy.

C. Provide linear sheet metal items in 10'-0" to 12'-0" sections, except as otherwise noted. Form flashing using single pieces for the full width. Provide shop-fabricated, one-piece corners and transition pieces, with maximum 2'-0" long legs.

D. Make riveted joints using solid shank rivets or pop rivets as applicable. Pop rivets shall be closed end type.

PART 3 - EXECUTION

3.1 SHEET METAL INSTALLATION:

A. Install work in accord with approved shop drawings and applicable standards. Sheet metal items shall be true to line, without buckling, creasing, warp or wind in finished surfaces.

B. Coordinate flashing at roof surfaces with roofing work to provide weathertight condition at roof terminations.

C. Perform field joining of lengths as specified for shop fabrication.

D. Isolate dissimilar materials to prevent electrolysis. Separate using bituminous coating.

E. Seaming: Form seams in direction of flow. Aluminum seams shall be filled with exterior sealant. Lap seams occurring in members sloping 45° or more than 4", minimum; bed in flashing cement.

F. Secure sheet metal items using continuous cleats, clips and fasteners as indicated. Perform no exposed face fastening.

G. Fastening:
   1. Nails: Confine to one edge only of flashing 1'-0" or less in width. Space nails at 4" o. c., maximum. Provide neoprene washers for nails.
   2. Cleats: Continuous, formed to profile of item being secured.
   3. Clips: Minimum 2" wide by 3" long, formed to profile of item being secured. Space at 2'-0" o. c., maximum.

H. Joints:
   1. Form joints in linear sheet metal to allow for 1/2" minimum expansion at 12'-0" o. c., maximum, and maximum 2'-0" from corners.
   2. Form plates to profile of sheet metal item.
   3. Install 1'-0" wide backup plate centered under joint. Set sheet metal over backup plate in two beads of specified silicone sealant, 1/4" in diameter, minimum.
   4. For units with top width of 12" and wider, install 6" cover plate centered over joint. Set in two beads of specified silicone sealant, 1/4" in diameter, minimum.
   5. Mate components for positive seal. Do not allow sealant to migrate onto exposed surfaces.

I. Where sheet metal is indicated as flashing above and below heads of doors, windows and other penetrations, extend flashing minimum 8" beyond opening, each side. Turn ends up minimum 2" to form end dams and to ensure drainage through weeps and not into cavity.

END OF SECTION

SECTION 07714

GUTTERS AND DOWNSPOUTS

PART 1 - GENERAL

1.1 SUMMARY:

A. Related work specified elsewhere:
   1. Roofing system.
   2. Sheet metal flashing and trim.

1.2 SUBMITTALS:

A. Shop drawings: Indicate material types, sizes, shapes, thicknesses, finishes, fabrication details, anchors, connections, expansion joints and relation to adjacent work. Details and profiles shall be drawn at full scale.

B. Product data: Indicate product description, finishes and installation instructions for manufactured products, including interface with adjacent materials and surfaces.

C. Samples; submit as follows:
   1. Special finishes:
      a. 6" by 6" samples for Architect's color selection.
      b. 6' by 6" samples for Architect’s color verification.

1.3 QUALITY ASSURANCE:

A. Applicable standards as referenced herein:

17. Aluminum Association (AA), "Aluminum Sheet Metal Work in Building Construction”.
18. American Architectural Manufacturers Association (AAMA).
19. American National Standard Institute/Single Ply Roofing Institute (ANSI/SPRI), as referenced herein.
20. ASTM International (ASTM).
21. National Roofing Contractors Association (NRCA), "Roofing and Waterproofing Manual", Fifth Edition, 2001 with 2003 Update.
22. Sheet Metal and Air Conditioning Contractors National Association, Inc. (SMACNA), "Architectural Sheet Metal Manual," Sixth Edition, 2003.

1.4 DELIVERY, STORAGE AND HANDLING:

A. Store materials off ground, under cover. Protect from damage and deterioration.

B. Handle materials to prevent damage to surfaces, edges and ends of sheet metal items. Damaged material shall be rejected and removed from site.

1.5 WARRANTIES:

A. Warrant sheet metal flashing and trim work to be free of defects in materials and workmanship. Warranty period shall be two years beginning at Date of Substantial Completion.

B. Finish warranty: Warrant fluoropolymer coating to remain free of checking, crazing, peeling, chalking or fading for a period of twenty years, beginning at Date of Substantial Completion.

PART 2 - PRODUCTS

2.1 SHEET METAL MATERIALS:

1. Aluminum: 3003-H14 alloy, meeting ASTM B209-07.
   1. Gutters: Material thickness shall meet SMACNA Manual Table 1-5 requirements, minimum 0.063" thickness, fluoropolymer finish.
   2. Downspouts: Material thickness shall meet SMACNA Manual Table 1-9 requirements, minimum 0.050" thickness, finish to match gutters.
   3. Gutter brackets: Material thickness shall meet SMACNA Manual Table 1-8 size requirements, minimum 1/4" thickness by 1" wide, finish to match gutters.
   4. Downspout hangers: 0.063" thickness, finish to match downspouts.

B. Fasteners: Stainless steel.
   1. Nails: Flat head, needle point, not less than 12 ga. and of sufficient length to penetrate substrate 1" minimum.
   2. Expansion shields: Lead or bronze sleeves.
   3. Screws: Self-tapping type, with round heads.
   4. Bolts: Furnished complete with nuts and washers.
   5. Rivets: Round head, solid type.
   6. Blind clips and cleats: Same gauge as sheet metal.

C. Silicone sealant for concealed joints:
   1. Acceptable products:
      a. Dow Corning Corp., #795.
      b. Pecora Corp., #895.
      c. Tremco, Inc., an RPM Company, SpecTrem 2.
   2. Type: One-part silicone rubber; meeting ASTM C920-10, Type S, Grade NS, Class 25.

D. Bituminous coating for separation of dissimilar materials: Cold-applied, asphalt roofing cement meeting SSPC-PS 9.01, minimum 30 mils thickness.

2.2 FINISHES:

A. Fluoropolymer coating finish:

1. Three coat, shop-applied, baked-on fluoropolymer coating system based on minimum 70% Arkema Group, Kynar 500 or Solvay Solexis, Inc., Hylar 5000 resin (Polyvinylidene fluoride, PVDF), formulated by a licensed manufacturer and applied by manufacturer's approved applicator to meet AAMA 2605-05.
2. Color: Custom (Non-Exotic) color to match Architect's sample.
3. Finish on unexposed surfaces: Mill finish.
4. Work to receive fluoropolymer coating includes sheet metal flashing and trim exposed to view from building elevations.

2.3 SHEET METAL FABRICATION:

A. Fabricate sheet metal work in accord with approved shop drawings and applicable standards. Form sheet metal work with clear, sharp and uniform arrises. Hem exposed edges. Form curved components to radius indicated on the drawings, without deformation in metal.

B. In aluminum sheets less than 0.040" thick, make joints using flatlock seams, 3/4" in width. Fill seams with exterior sealant. Make joints in thicker sheets using seaming or by Tungsten Arc Welding (TIG) or Gas Metal Arc Welding (MIG) processes, using appropriate filler alloy.

C. Provide linear sheet metal items in 10'-0" to 12'-0" sections, except as otherwise noted. Form flashing using single pieces for the full width. Provide shop-fabricated, one-piece corners and transition pieces, with maximum 2'-0" long legs.

D. Make riveted joints using solid shank rivets or pop rivets as applicable. Pop rivets shall be closed end type.

E. SMACNA Manual fabrication requirements:
1. Gutters: Figure 1-2, Style A. Size gutters in accord with Tables 1-1, 1-2, 1-3 and 1-4, and Charts 1-1 and 1-2.
2. Downspouts: Figure 1-32B. Size downspouts in accord with Tables 1-1, 1-2, 1-3 and 1-4, and Charts 1-1 and 1-2.

PART 3 - EXECUTION

3.1 INSTALLATION:

A. Install work in accord with approved shop drawings and applicable standards. Sheet metal items shall be true to line, without buckling, creasing, warp or wind in finished surfaces.

B. Coordinate flashing at gutters and roofing work to provide weathertight condition at roof/gutter terminations.

C. Perform field joining of lengths as specified for shop fabrication.

D. Isolate dissimilar materials to prevent electrolysis. Separate using bituminous coating.

E. Seaming: Form seams in direction of flow. Aluminum seams shall be filled with exterior sealant. Lap seams occurring in members sloping 45° or more than 4", minimum; bed in flashing cement.

F. Gutters and downspouts:
   1. Construct with riveted and sealed joints, lapped 1", minimum, in direction of flow. Provide 3/4" minimum expansion joints at 30'-0" o. c., maximum. Form expansion joints in accord with SMACNA Manual, Figure 1-7, butt type.
   2. Hang gutters with high points equidistant from downspouts, evenly sloped toward downspouts. Support gutters in accord with SMACNA Manual, Figure 1-17 for steep sloped roofs.
   3. Secure downspouts to exterior walls at 6'-0" o. c., maximum, using straps and expansion type fasteners in accord with SMACNA Manual, Figure 1-35C. Lap downspout joints 1-1/2", minimum, and seal.

END OF SECTION

SECTION 07840

FIRESTOPPING

PART 1 - GENERAL

1.1 SUMMARY:

A. Related work:
1. Concrete.
2. Mortar and grout.
3. Concrete unit masonry.
4. Structural steel.
5. Metal decking.
6. Metal fabrications.
7. Rough carpentry.
8. Thermal insulation.
9. Joint sealants.
10. Gypsum board.
11. Fire protection specialties.
12. Mechanical.
13. Plumbing.
14. Electrical.

1.2 SYSTEM PERFORMANCE REQUIREMENTS:

A. Firestopping systems shall provide resistance to spread of fire, and passage of smoke and other gases according to requirements indicated, including but not limited to the following:
1. Firestop penetrations passing through fire resistance rated wall and floor assemblies and other locations as indicated on drawings.
2. Penetration firestopping systems shall have been tested and approved by third party testing agency.
3. Through-penetration firestop systems and devices shall resist spread of fire, and passage of smoke and other gases according to requirements indicated, including but not limited to the following:
   a. F - rating shall equal or exceed the rating of the fire-resistive construction assembly through which the penetration is made, as determined by ASTM E814-08b, but shall be not less than 1-hour.
   b. T - rating, in addition to F-rating, at penetrations located outside of a wall cavity, shall equal fire-resistive rating of floor construction, as determined by ASTM E814-08b, but shall be not less than 1-hour.
   c. L - rating: In addition to F and T ratings, firestopping shall have an L - rating, as determined by UL 1479, where indicated by code.
   d. W - rating: In addition to F, T and L ratings, firestopping shall have W - rating, as determined by UL 1479, where indicated.

4. Fire-resistive joints shall have fire-resistance ratings indicated, as determined by UL 2079, but not less than fire-resistance rating of construction in which the joint occurs.
5. Firestop systems using cementitious fill materials shall not be permitted.
6. Systems shall be free of asbestos and volatile organic compounds (VOCs).
7. Where there is no specific third party tested and classified firestop system available for a particular firestop configurations, obtain from firestop manufacturer, an Engineering Judgement (EJ) or Equivalent Fire Resistance Rated Assembly (EFFRA).
8. Systems used within or adjacent to occupied spaces shall be free of volatile solvents, noxious fumes and strong odors.

1.3 SUBMITTALS:

A. Shop drawings: Submit detailed drawings of each type and size penetration through fire-rated construction, indicating materials, dimensions, assembly construction and rating. Indicate through-penetration firestop system design listings, including illustrations from a qualified testing and inspection agency for each type penetration.

B. Product data: Submit product data and installation instructions for each type of installation. Include installation details and test reports indicating that firestopping materials, systems and devices meet specified requirements and design criteria. Indicate Classification marking of qualified testing and inspection agency.

C. Certifications:
1. Submit written certification that firestop materials are asbestos free and that materials comply with local regulations.
2. Submit written certification that firestop materials comply with local regulations controlling use of volatile organic compounds (VOC's) and are non-toxic to building occupants.

1.4 QUALITY ASSURANCE:

A. Applicable standards; standards of the following, as referenced herein:
1. ASTM International (ASTM).
2. National Fire Protection Association (NFPA).
3. Underwriters Laboratories, Inc. (UL).

B. Fire-test-response characteristics: Provide firestopping system design listing by a testing and inspection agency in accord with the specified UL standards.

C. Acceptable installer shall comply with one or more of the following:
1. Licensed by state or local authority, where applicable.
2. Successfully completed not less than 5 comparable scale projects.

D. Single source responsibility: Obtain firestop systems for each kind of penetration and construction condition indicated from a single primary firestop systems manufacturer.
   1. Materials from different manufacturer than allowed by tested and listed system shall not be intermixed in the same firestop system or opening.
   2. Install tested and listed firestop systems before installing an Engineering Judgement or Equivalent Fire Resistance Rated Assembly (EFFRA).

E. Pre-installation meeting: Prior to beginning firestopping work, a pre-installation meeting shall be held to review work to be accomplished.
   1. Contractor, Architect, firestopping system manufacturers' representatives, installer and other subcontractors whose work involves firestopping shall be present.
   2. Contractor shall notify all parties at least seven days prior to time for meeting.
   3. Contractor shall record minutes of meeting and distribute to attending parties.

F. Job mock-ups:
   1. Install one of each type firestopping assembly for review by Architect prior to commencement of firestopping work. Notify Architect at least 36 hours in advance for observation of mock-up installations. Should mock-ups be unacceptable, prepare additional mock-ups until acceptable to Architect.
   2. Following Architect's review, identify and preserve mock-ups as a standard of quality for remaining firestopping work. Acceptable mock-ups may remain as part of the finished work.

1.5 DELIVERY STORAGE AND HANDLING:

A. Deliver firestopping materials in original, unopened containers or packages with intact and legible manufacturers’ labels identifying product and manufacturer.

B. Store and handle firestopping materials in accord with manufacturer’s product data.

1.6 JOB CONDITIONS:

A. Coordinate firestopping installation with other work requiring penetrations through fire-resistive construction. Install penetrating elements prior to installation of firestopping systems or devices.

B. Secure inspection and approval of firestopping work by building officials prior to concealment.

C. Support penetrating elements independently of firestopping systems or devices.

D. Do not cover up firestopping installations until Owner’s inspection agency or Authorities Having Jurisdiction have examined each installation.

PART 2 - PRODUCTS

2.1 MATERIALS, GENERAL:

A. VOC Content: Penetration firestopping sealants and sealant primers shall comply with the following limits for VOC content when calculated according to 40 CFR 59, Subpart D (EPA Method 24):
   1. Sealants: 250 g/L.
   2. Sealant Primers for Nonporous Substrates: 250 g/L.
   3. Sealant Primers for Porous Substrates: 775 g/L.

2.2 THROUGH-PENETRATION FIRESTOP SYSTEMS:

A. Acceptable manufacturers; subject to compliance with specified requirements:
   1. Grace Construction Products.
   2. Hilti USA.
   3. 3M Fire Protection Products.
   4. Nelson Firestop Products.
   5. Rector Seal Corp.
   6. Specified Technologies, Inc. (STI).
   7. Tremco, Inc.

B. System description: Field-constructed firestopping for penetrations through walls and floors composed of specified materials and accessories assembled in accord with Through-Penetration Firestopping System Numbers, listed in UL Building Materials Directory, current Edition, and tested in accord with ASTM E814-08b.

C. Materials: UL Classified for use in through-penetration firestop systems.
   1. Firestop sealant: Single-component, elastomeric silicone or endothermic latex sealant compound; self-adhering, flexible and watertight; non-sag and self-leveling types as required.
   2. Firestop foam: Two-part, room temperature vulcanizing, silicone elastomer, non-combustible foam void seal.
   3. Intumescent sealants and putties: Single-component, synthetic, organic/inorganic intumescent elastomers.
   4. Intumescent wrap strips: One-part, organic/inorganic, intumescent elastomeric sheet; aluminum foil-faced one side.
   5. Intumescent composite sheets: Composite sheets composed of organic/inorganic intumescent elastomeric core bonded on one side to 28 ga. galvanized steel sheet and other side reinforced with steel wire mesh, covered with aluminum foil.
   6. Mineral wool or ceramic fiber safing: Non-combustible fiber tested in accord with ASTM E136-09, with melting point in excess of 2000 degrees F.; flame spread of 15 maximum and 0 smoke development when tested in accord with ASTM E84-09. Thickness and density shall be as required by Through-Penetration Firestop System designs.

D. Accessories:

1. Primers, adhesives and backer rods: As required by manufacturer's product data and system designs.
2. Forming, damming and packing materials: Types as indicated in Through-Penetration Firestop Systems.
3. Restricting collars: Manufacturer's standard design as required for firestop system.
4. Fasteners, anchor clips, sleeves, clamps, spacers, ties, cover plates and miscellaneous accessories: Provide as required by manufacturer's product data and in accord with Through-Penetration Firestop System designs.

2.3 THROUGH-PENETRATION FIRESTOP DEVICES:

A. Acceptable manufacturers; subject to compliance with specified requirements:
1. Grace Construction Products.
2. Hilti USA.
3. Isolatek International, Inc.
4. Nelson Firestop Products.
5. ProSet Systems, Inc.
6. Specified Technologies, Inc. (STI).
7. Tremco, Inc.

B. Types: Factory-assembled, self-contained firestopping devices for penetrations through walls and floors; UL Classified for Through-Penetration Firestop Devices as listed in UL Building Materials Directory, current Edition, and tested in accord with ASTM E814-08b.

C. Accessories: Provide sealants, adhesives, fasteners, sleeves, clamps, spacers, anchor clips, ties and accessories in accord with manufacturer's product data and as required for complete installation.

2.4 FIRESTOP SEALANTS:

A. Acceptable products; subject to compliance with specified requirements:
1. Grace Construction Products, FlameSafe Silicone Sealant.
2. Hilti USA, CP 601S Firestop Sealant.
3. Nelson Firestop Products, CLK.
4. 3M Fire Protection Products, Fire Barrier Silicone Sealant 2000 N/S.
5. Rector Seal Corp., Metacaulk 835+.
6. Specified Technologies, Inc. (STI), SpecSeal Pen 300 Silicone Joint Sealant.
7. Tremco, Inc., Fyre-Sil.

B. Characteristics: Single-component, self-adhering, flexible, watertight, elastomeric silicone sealant compound; UL Classified. Provide self-leveling type for horizontal applications, non-sag type for all other applications.

2.5 SAFING:

A. Acceptable products; subject to compliance with specified requirements:
   1. Thermal Ceramics, Cerablanket F.S.
   2. Thermafiber Inc., Thermafiber Safing Insulation.

B. Characteristics:
   1. Material: Semi-rigid mineral fiber insulation, meeting ASTM C665-06, Type 1.
   2. Density: 4.0 pcf.
   3. Thickness: As required to meet specified requirements.
   4. Facing: Unfaced or reinforced foil facing, based on UL Design selected.
   5. Fire resistance properties:
      a. Melting point: Minimum of 2000°F. when tested in accord with ASTM C24-09.
      b. Non-combustible: As defined by ASTM E136-09 and NFPA.
      c. Fire hazard characteristics: Maximum flame spread of 15 and smoke development of 5 when tested in accord with ASTM E84-09 (unfaced).

PART 3 - EXECUTION

3.1 EXAMINATION:

A. Examine areas to receive firestopping materials prior to beginning work. Verify that opening areas and dimensions for penetrations to receive firestopping systems and devices do not exceed design requirements.

B. Remove projections interfering with installation. Prepare surfaces in accord with manufacturer's product data and UL Through-Penetration Firestop Devices Numbers.

3.2 PREPARATION:

A. Priming: Prime substrates where recommended by firestopping manufacturer using that manufacturer’s recommended products and methods. Confine primers to areas of bond. Do not allow spillage and migration onto exposed surfaces.

B. Masking tape: Use masking tape to prevent firestopping from contacting adjoining surfaces that will remain exposed upon completion of the Work. Remove tape as soon as it is possible to do so without disturbing the firestopping seal with substrates.

3.3 INSTALLATION:

A. General:
   1. Comply with manufacturer's product data and UL Classified for Through-Penetration Firestop Devices Numbers.

2. Install firestopping materials fitted to adjacent construction to fill voids.
3. Firestop penetrations through fire-rated walls, partitions, floors and floor/ceiling assemblies with tested assemblies in accord with UL 1479 or with a through-penetration firestop system or device when tested in accord with ASTM E814-08b.
4. Firestopping shall comply with code requirements.

B. Fire and smoke barrier identification:
1. Fire walls, fire barriers, fire partitions, smoke barriers and smoke partitions or any other rated wall required to have protected openings shall be effectively and permanently identified with signs or stenciling in a manner acceptable to the Authority having Jurisdiction.
2. Such identification shall be above any decorative ceiling and in concealed spaces, and near the top of the wall or barrier in unfinished spaces.
3. Such identification shall be letters a minimum of 2" (51 mm) high on a contrasting background, spaced at 12'-0" o.c. maximum, with a minimum of one per wall or barrier. Comply with code requirements.
4. Suggested wording for fire and smoke barriers: "_____ HOUR FIRE AND SMOKE BARRIER – PROTECT ALL OPENINGS."

C. Through-penetration firestop systems and devices:
1. Install at penetrations through fire-rated floor and wall construction, including partitions and floor/ceiling assemblies, in accord with manufacturer's product data and UL System Numbers. Provide materials and accessories as required.
2. Install intumescent type firestop systems where plastic piping, cable, conduit and other combustible items, including insulated metal pipes, penetrate fire-rated construction.
3. At Contractor's option, through-penetration firestop devices of similar function may be installed in lieu of firestop systems.
4. Do not remove forming materials unless specified in system designs.

D. Firestop sealant: Seal perimeters, voids and joints of fire-rated walls and partitions, including abutment of floor and roof or ceiling structure, and flutes of metal decking.
1. If required by UL Design, install mineral wool or ceramic fiber in cavities, packed full and tight with allowance for sealant installation.
2. Seal both faces of walls and partitions with firestop sealant. Tool sealant flush with adjacent finish.
3. In accord with UL Fire Resistance Directory Designs, packed concrete and masonry joints shall be sealed using firestop sealant or using sealant as specified in Joint Sealants section.

E. Mineral fiber safing:
1. Install safing in cavities of penetrations through non-rated floor and wall construction, including spaces around piping, conduits, cables and duct penetrations.
2. Install safing in voids and joints of non-rated walls and partitions abutting metal decking of floor and roof structures. Pack flutes of metal decking

solid with safing material.

3. Safing shall be installed at joints and penetrations in non-rated construction not exposed to view and concealed in finish work. Secure safing by compressing into voids or joints and using manufacturer's standard clips or closure plates as required.

F. Seal voids and joints of non-rated walls and partitions abutting concrete floor and roof construction using sealant as specified in other sections.

3.4 FIELD QUALITY CONTROL:

A. Inspection: Independent inspection agency employed and paid by Owner, will examine penetration firestopping in accord with ASTM E2174-04 and ASTM E2393-04. Inspection agency will examine firestopping and will determine, in general, that firestopping has been installed in compliance with tested and listed firestop system, and that installation process conforms to FM 4991 - Standard for Approval of Firestop Contractors or UL Qualified Firestop Contractor Program.

B. Inspector will advise contractor of deficiencies noted within one working day.

C. Do not proceed to enclose firestopping with other construction until inspection agency has verified firestop installation complies with requirements of Contract Documents.

D. Where deficiencies are found, repair or replace firestopping so that it complies with requirements of tested and listed system design.

3.5 CLEANING:

A. Clean off excess fill materials and sealants adjacent to openings and joints as work progresses. Use methods and cleaning materials approved by manufacturers of firestopping products and or assemblies in which openings and joints occur.

B. Protect firestopping during and after curing period from contact with contaminating substances.

END OF SECTION

SECTION 07910

JOINT FILLERS

PART 1 -- GENERAL

1.01 DESCRIPTION

This section specifies joint fillers.

1.02 QUALITY ASSURANCE

A. REFERENCES:

This section contains references to the following documents. They are a part of this section as specified and modified. In case of a conflict between the requirements of this section and those of the listed documents, the requirements of this section shall prevail.

Reference	Title
ASTM D994-71	Preformed Expansion Joint Filler for Concrete (Bituminous Type)
ASTM D 1751	Preformed Expansion Joint Filler for Concrete Paving and Structural Construction (Nonextruding and Resilient Bituminous Types)
ASTM D1752-84	Preformed Sponge Rubber and Cork Expansion Joint Fillers for Concrete Paving and Structural Construction

PART 2 -- PRODUCTS

2.01 PREFORMED ASPHALT JOINT FILLER

Preformed asphalt joint filler shall be in accordance with ASTM D994 and shall be 1/2 inch thick unless otherwise specified.

2.02 PREFORMED FIBER JOINT FILLER

Preformed fiber joint filler shall be in accordance with ASTM D1751 and shall be 1/2 inch thick unless otherwise specified.

2.03 SPONGE RUBBER JOINT FILLER

Sponge rubber joint filler shall be in accordance with ASTM D1752, Type I. Sponge rubber thickness shall match joint width.

2.04 PRODUCT DATA

The following information shall be provided in accordance with Section 01300:

1. Manufacturer's recommendations for handling and installation of the material.

2. A copy of this specification section, with addendum updates included, and all referenced and applicable sections, with addendum updates included, with each paragraph check-marked to indicate specification compliance or marked to indicate requested deviations from specification requirements. Check marks (✓) shall denote full compliance with a paragraph as a whole. If deviations from the specifications are indicated, and therefore requested by the Contractor, each deviation shall be underlined and denoted by a number in the margin to the right of the identified paragraph, referenced to a detailed written explanation of the reasons for requesting the deviation. The Engineer shall be the final authority for determining acceptability of requested deviations. The remaining portions of the paragraph not underlined will signify compliance on the part of the Contractor with the specifications. Failure to include a copy of the marked-up specification sections, along with justification(s) for any requested deviations to the specification requirements, with the submittal shall be sufficient cause for rejection of the entire submittal with no further consideration.

PART 3 -- EXECUTION

3.01 GENERAL

Preformed joint fillers shall be placed into position before the concrete is poured. Where it is necessary for the filler to be fixed to existing concrete or other building materials, a suitable adhesive recommended by the filler manufacturer shall be used. Filler surfaces shall be clean and dry prior to the placement of the concrete.

Where not specifically indicated on the drawings, either asphalt joint filler or fiber joint filler may be used.

END OF SECTION

SECTION 07920

JOINT SEALANTS

PART 1 - GENERAL

1.1 SUMMARY:

A. Related work specified elsewhere:
   1. Window framing internal sealants.
   2. Glazing sealants.
   3. Roofing and flashing sealants.
   4. Firestopping.

B. Definitions:
   1. Joint sealant:
      a. A weatherproof elastomer used in filling and sealing joints, having properties of adhesion, cohesion, extensibility under tension, compressibility and recovery; designed to make joints air and watertight.
      b. Material is designed generally for application in exterior joints and for joints subject to movement.
   2. Joint sealant compound:
      a. A material used in filling joints and seams, having properties of adhesion and cohesion; not required to have extensibility and recovery properties.
      b. Material is designed generally for application in interior joints not subject to movement.
   3. Caulk: The process of filling joints, without regard to type of material.
   4. Joint failure: A caulked joint exhibiting one or more of the following characteristics:
      a. Air and/or water leakage.
      b. Migration and/or reversion.
      c. Loss of adhesion.
      d. Loss of cohesion.
      e. Failure to cure.
      f. Discoloration.
      g. Staining of adjacent work.
      h. Development of bubbles, air pockets or voids.

1.2 SUBMITTALS:

A. Product data: Submit manufacturer's product description, indicating conformance with specified requirements and installation instructions for each type of sealant. Indicate preparation and priming requirements for each substrate condition.

B. Color samples for each sealant type:

1. Samples for initial selection: Samples shall be actual materials or literature depicting actual colors of standard color materials showing full range of colors available for each product exposed to view.
2. Samples for verification: For each kind and color of joint sealant required, provide samples with joint sealants in 1/2" wide joints formed between two 6" long strips of material matching appearance of exposed surfaces adjacent to joint sealants.

C. Adhesion compatibility test results: Submit a letter from sealant manufacturer of each sealant type indicating adhesion and compatibility testing has been performed and that materials are compatible and that adhesion is acceptable. Indicate requirements for primers or special preparation.

D. Joint sealant schedule: Include the following information:
1. Joint sealant applications, joint locations, and designations.
2. Joint sealant manufacturers and product names.
3. Joint sealant formulations.
4. Joint sealant colors.

1.3 QUALITY ASSURANCE:

A. Applicable standards as referenced herein: ASTM International (ASTM).

B. Adhesion compatibility tests: Perform tests on actual samples of aluminum framing systems components, to determine that materials are compatible and that adhesion is acceptable. Identify requirements for primers or special preparation.
1. Test structural sealants in accord with ASTM C1135-00(2005).

C. VOC content of interior sealants: Sealants and sealant primers used inside the weatherproofing system shall comply with the following limits for VOC content when calculated according to 40 CFR 59, Subpart D (EPA Method 24):
1. Architectural sealants: 250 g/L.
2. Sealant primers for nonporous substrates: 250 g/L.
3. Sealant primers for porous substrates: 775 g/L.

D. Architect reserves the right to reject work not in conformance with selected colors, based upon verification samples.

E. Mock-up:
1. Prepare, caulk and finish one mock-up sample of each joint condition.
2. Sample joints shall be approved by Architect prior to beginning work. Approved, undamaged mock-up joints shall serve as a standard of quality for the remainder of the work.

1.4 PROJECT/SITE CONDITIONS:

A. Weather conditions:

1. Install no materials under adverse weather conditions or when temperatures are below or above those recommended by manufacturer's product data or when substrate moisture content is above manufacturer's recommended level.
2. Proceed with work only when forecasted weather conditions are favorable for joint cure and development of high early bond strength.
3. Wherever joint width is affected by ambient temperature variations, install materials only when temperatures are in lower third of manufacturer's recommended installation temperature range.

B. Protection of adjacent surfaces:
1. Protect by applying masking material or manipulating application equipment to keep materials in joint. If masking materials are used, allow no tape to touch cleaned surfaces to receive sealant. Remove tape immediately after sealant application, before surface skin begins to form.
2. Remove misapplied materials from surfaces by using solvents and methods recommended by manufacturer.
3. At surfaces from which materials have been removed, restore to original condition and appearance.

1.5 WARRANTIES:

A. Installer's warranty: Warrant work to be watertight and free from defects in materials and workmanship, including joint failure, for a period of five years.

B. Exterior silicone sealant material warranty: Warrant exterior silicone sealants to be free from defects in materials and to provide structural adhesion, watertight weatherseal and non-staining of adjacent materials for a period of twenty years.

B. Exterior polyurethane sealant material warranty: Warrant exterior polyurethane sealants to be free from defects in materials and to provide a watertight weatherseal for a period of five years.

C. Warranties shall begin at Date of Substantial Completion.

PART 2 - PRODUCTS

2.1 SILICONE SEALANTS:

A. Low modulus silicone sealant:
1. Acceptable products; subject to compliance with specified requirements:
   a. Dow Corning Corp., #790.
   b. GE Advanced Materials, Silpruf LM SCS2700.
   c. Pecora Corp., #890NST.
   d. Tremco, Inc., an RPM Company, SpecTrem 1.
2. Type: One-part, low modulus silicone rubber; meeting ASTM C920-10, Type S, Grade NS, Class 50, for use NT.

3. Colors: As selected by Architect from manufacturer's premium color range.

B. Medium modulus silicone sealant:
1. Acceptable products; subject to compliance with specified requirements:
a. Dow Corning Corp., #795.
b. GE Advanced Materials, Silpruf SCS2000.
c. Pecora Corp., #895NST.
d. Tremco, Inc., an RPM Company, SpecTrem 2.
2. Type: One-part silicone rubber; meeting ASTM C920-10, Type S, Grade NS, Class 50, for use NT.
3. Colors: As selected by Architect from manufacturer's premium color range.

2.2 POLYURETHANE SEALANTS:

A. One-part, non-sag polyurethane sealant:
1. Acceptable products:
a. BASF Building Products, Sonolastic NP-1.
b. Pecora Corp., Dynatrol I-XL.
c. Tremco, Inc., an RPM Company, Vulkem 116.
d. Tremco, Inc., an RPM Company, Dymonic.
2. Type: One-part, non-sag polyurethane-based sealant; meeting ASTM C920-10, Type S, Grade NS, Class 25, for use NT.
3. Colors: As selected by Architect from manufacturer's premium color range.

2.3 TWO-PART POLYURETHANE SEALANT FOR HORIZONTAL TRAFFIC-BEARING PAVEMENTS:

A. Acceptable products:
1. BASF Building Systems, Sonolastic NP 2.
2. Pecora Corp., Urexpan NR-200.
3. Tremco, Inc., an RPM Company, Vulkem 227.

B. Characteristics:
1. Type: Two-component polyurethane sealant for horizontal traffic-bearing surfaces meeting ASTM C920-10, Type M, Grade P or NS, minimum Class 25, for use T; self-leveling for flat surfaces and non-sag for sloped surfaces.
2. Colors: As selected by Architect from manufacturer's premium color range.

2.4 SILICONE BATH SEALANT FOR WET AREAS:

A. Acceptable products:
1. BASF Building Systems, Omniplus.
2. Dow Corning Corp., 786 Mildew-Resistant Silicone Sealant.
3. Franklin International, Titebond Kitchen & Bath Sealant.

4. GE Advanced Materials, Sanitary SCS1700.
5. Pecora Corp., #898NST Silicone Sanitary Sealant.

B. Characteristics:
1. Type: One-part silicone rubber, mildew- and stain-resistant, acid-curing silicone sealant; meeting ASTM C920-10, Type S, Grade NS, Class 25, for use NT.
2. Color: As selected by Architect from manufacturer's premium color range.

2.5 SOLVENT-RELEASE-CURING ACRYLIC SEALANT:

A. Acceptable products:
1. Franklin International, Titebond Painters Plus Caulk.
2. Schnee-Morehead, Inc., Acryl-R Acrylic Sealant.
3. Tremco, Inc., an RPM Company, Mono 555.

B. Characteristics:
1. Type: One-part, acrylic polymer sealant, meeting ASTM C1311-10.
2. Colors: As selected by Architect from manufacturer's premium color range.

2.6 PAINTABLE ACRYLIC-LATEX JOINT SEALANT:

A. Acceptable products:
1. BASF Building Systems, Sonolastic Sonolac.
2. Bostik, Chem-Calk 600.
3. Franklin International, Titebond Painters Caulk.
4. GE Advanced Materials, RCS20.
5. Pecora Corp., AC-20 Acrylic Latex.
6. Tremco, Inc., an RPM Company, Tremflex 834.

B. Characteristics: Flexible, paintable, non-staining, non-bleeding acrylic latex or siliconized acrylic emulsion, meeting ASTM C834-10, Type OP, Grade NF.

2.7 ACCESSORY MATERIALS:

A. Joint cleaner: Type recommended by material manufacturer for substrates indicated.

B. Joint primer/sealer: Type recommended by material manufacturer for substrates, conditions and exposures indicated.

C. Bond breaker tape: Plastic tape applied to contact surfaces where bond to substrate or joint filler must be avoided for material performance.

D. Sealant backer rod: Compressible rod stock as recommended by sealant manufacturer for compatibility with sealant. Provide size and shape of rod to control joint depth.

E. Tooling agent: Agent recommended by material manufacturer to ensure contact of material with inner joint faces.

PART 3 - EXECUTION

3.1 JOINT SURFACE PREPARATION:

A. Clean joints of debris and projections including shims.

B. Clean joint surfaces immediately before caulking joints. Remove dirt, insecure coatings, moisture and other substances which would interfere with bond.

C. Etch concrete and masonry joint surfaces to remove excess alkalinity, unless material manufacturer's product data indicates that alkalinity does not interfere with bond and performance. Etch with 5% solution of muriatic acid; neutralize with dilute ammonia solution; rinse with clean water and allow to dry before caulking.

D. Roughen joint surfaces of non-porous materials, unless material manufacturer's product data indicates equal bond strength as porous surfaces. Rub with fine abrasive cloth or wool to produce dull sheen.

3.2 APPLICATION:

A. Comply with joint sealant material manufacturer's product data and ASTM C1193-09 except where more stringent requirements are specified.

B. Prime joint surfaces where recommended by material manufacturer. Do not allow primer/sealer to spill or migrate onto adjacent surfaces.

C. Install backer rod for joint sealant materials, except where recommended by material manufacturer to be omitted for application indicated.
   1. Place backer rod to maintain recommended sealant thickness and profile.
   2. Place rod at depth to provide sealant manufacturer’s recommended sealant depth.
   3. Do not twist rod during installation.
   4. Place rod to minimize possibility of extrusion when joint is compressed.
   5. Install bond breaker tape in lieu of backer rod for shallow, closed joints and as recommended by manufacturer’s product data.

D. Employ installation techniques which will ensure that materials are deposited in uniform, continuous ribbons without gaps or air pockets, with complete wetting of joint bond surfaces. Where horizontal joints are between a horizontal surface

and a vertical surface, fill joint to form slight cove so that joint will not trap moisture and debris.

E. Do not allow materials to overflow onto adjacent surfaces. Prevent staining of adjacent surfaces.

F. Remove excess and misplaced materials as work progresses. Clean the adjoining surfaces to remove misplaced materials, without damage to adjacent surfaces or finishes.

G. Interior joints: At interior joints and seams at abutting and adjacent materials, recess joint sealant 3/16" in joints wider than 1/4". At joints 1/4" or less in width, tool joint sealant flush.

H. Tool joints of non-sag sealant to concave profile and smooth, uniform surface, flush with edges of substrate. Maintain sealant depth-to-width ratio in accord with manufacturer's product data.

I. Cure joint sealants and joint sealant compounds in accord with manufacturer's product data to obtain high early bond strength, internal cohesive strength and surface durability. Protect uncured surfaces from contamination and physical damage.

3.3 JOINT SEALANT SCHEDULE:

A. Exterior vertical expansion joints: Low modulus silicone sealant.

B. Exterior and interior joints between precast concrete units, including false joints: Low modulus silicone sealant.

C. Exterior and interior joints in masonry, including control joints: Low modulus silicone sealant.

D. Exterior joints in weather barriers: One-part, non-sag polyurethane sealant.

E. Joints between metal panels: Medium modulus silicone sealant.

F. Exterior and interior joints at perimeter of aluminum framing systems: Medium modulus silicone sealant.

G. Exterior and interior joints at perimeter of hollow metal framing: Medium modulus silicone sealant.

H. Exterior joints between wall finish and conduit and pipe penetrations, base plates of light fixtures, signage supports, and other items applied to exterior wall surface: Medium modulus silicone sealant.

I. Interior concealed bedding joints and thresholds: Acrylic sealant. Solvent-release-curing acrylic sealant.

J. Exterior and interior horizontal traffic-bearing joints: Two-part polyurethane sealant.

K. Firestopped joints: Firestop sealant as specified in Firestopping section.

L. Typical interior joints and seams at abutting and adjacent materials except as specified herein: Paintable acrylic-latex joint sealant.

M. Interior joints in conjunction with vanities, fixtures and tile finishes: Silicone bath sealant.

END OF SECTION

SECTION 08110

STEEL DOORS AND FRAMES

PART 1 - GENERAL

1.1 SUMMARY:

A. Related work specified elsewhere:
   1. Wood doors.
   2. Door hardware.
   3. Glazing.
   4. Painting and coating.

1.2 PERFORMANCE REQUIREMENTS:

A. Physical endurance: Comply with performance level for specified level classification in accord with ANSI A250.8-2003(R2008) and ANSI A250.4-01 for doors and hardware reinforcing, ANSI A250.4-01 for doors, frames, frame anchors and hardware reinforcings.

B. Finish: Comply with standard performance criteria of ANSI A250.10-98(R2004) for primed steel surfaces.

C. Thermal performance: Minimum aged value of U = 0.10 (R = 10.2) or better, apparent thermal performance in accord with SDI-113-01(R06).

D. Acoustical performance: STC of 25 or better in accord with SDI-128-09, ASTM E90-04 and ASTM E413-04.

1.3 SUBMITTALS:

A. Shop drawings: Indicate door and frame elevations and sections, materials, gauges and finishes, fabrication and erection details, location of finish hardware by dimension and locations, details of openings and louvers, and fire rating requirements.

B. Samples: Submit as follows:
   1. Door: 1'-0" by 1'-0" corner section showing door construction.
   2. Welded frame: 1'-0" by 1'-0" head and jamb corner section showing welded corner construction.
   3. Anchors: One of each type.

C. Product data: Indicate that hollow metal doors and frames comply with specified requirements, including performance criteria.

D. Certification of label construction: For components exceeding Underwriters Laboratories Inc. (UL) tested size limitations, submit UL inspection certificate stating that component construction conforms to UL rating requirements.

1.4 QUALITY ASSURANCE:

A. Applicable standards; standards of the following, as referenced herein:
   1. American National Standards Institute, Inc. (ANSI).
   2. ASTM International (ASTM).
   3. National Fire Protection Association (NFPA), National Fire Codes.
   4. Society for Protective Coatings (SSPC).
   5. Steel Door Institute (SDI).
   6. Underwriters Laboratories, Inc. (UL).

B. Fabrication standard: Except for more stringent requirements specified, comply with ANSI A250.8-2003(R2008) including performance levels as referenced.

C. Fire door assemblies:
   1. Door and frame assemblies in rated walls shall have been tested in accord with NFPA 252 or UL 10C; after 5 minutes into NFPA 252 test, neutral pressure shall have been established at 40" or less above sill.
   2. Door and frame assemblies in corridors and smoke barriers shall have a minimum fire rating of 20 minutes and shall have been tested in accord with NFPA 252 or UL 10C without hose stream test. Assemblies shall comply with UL 1784 for draft and smoke control test; leakage may not exceed 3.0 CFM per foot of door at 0.10" of water column.

D. Labeling requirements:
   1. Fire-rated components shall bear factory-applied labels showing name of manufacturer, name of third-party inspection agency, fire-protection rating, and where required for doors in exit enclosures, maximum transmitted temperature end point.
   2. Smoke and draft doors complying with UL 1784 shall be labeled as a smoke and draft control door.
   3. Permanently attach label to hinge stile of each fire-rated and smoke and draft control door.

1.5 DELIVERY, STORAGE AND HANDLING:

A. Deliver hollow metal doors and frames cartoned for protection. Mark each hollow metal door and frame at top hinge and on outside of carton with destination door mark indicated on door schedule.

B. Inspect work upon delivery for damage. Reject damaged items.

C. Store materials under cover, on raised platforms.
   1. Stack a maximum of five assembled frame units and doors vertically with minimum 1/4" spacers between units.
   2. Protect from moisture but provide for cross ventilation. Remove units from wet containers if wetting occurs.

PART 2 - PRODUCTS

2.1 MATERIAL:

A. Steel:
1. Interior frames and cased openings: Fabricate of cold-rolled steel sheet meeting ASTM A1008-08a.
2. Exterior doors and frames: Fabricate of commercial quality, hot dip galvanized or galvannealed steel sheet meeting ASTM A653-08 Designation A60 or G60; wipe coat not acceptable.

B. Finish: Prime painted steel surfaces shall comply with requirements for acceptance stated in ANSI A250.3.
1. Interior frames and cased openings: One coat of manufacturer's standard rust-inhibitive primer.
2. Exterior doors and frames: One coat of manufacturer's standard rust-inhibitive primer after chemical treatment of galvanized surfaces for paint adhesion.

C. Coating for inside of frames to be fully grouted in masonry and concrete construction: Factory or field applied epoxy undercoating:
1. Tnemec Series 66 Hi-Build Epoxoline.
2. Devoe High Performance Coatings, Devran 224HS High Build Epoxy.
3. PPG Aquapon High-Build Semi-Gloss Polyamide-Epoxy Coating 97-130 Series.

2.2 DOORS:

A. Exterior insulated composite metal doors: Level III, 16 ga., Extra Heavy Duty, Model Two seamless, 1-3/4" thickness, with polyurethane core.

B. Door construction:
1. Edge bevel: Vertical edges beveled 1/8" in 2". Non-handed door blanks with filler plates are not acceptable.
2. Top and bottom edges: Flush, welded, minimum 18 ga. steel. Provide weep holes in bottom edge of exterior doors.
3. Join door edges by a continuous weld extending the full height of door. Grind, fill and dress welds smooth to make invisible and provide smooth flush surface.

C. Panels: Same construction as doors, attached with concealed fasteners.

2.3 FRAMES:

A. Frame construction including sidelights and borrowed lite frames:
1. Welded steel frames in masonry and concrete walls, fire-rated frames and frames over 7'-0" in height in drywall partitions:
a. Gauges:
1) Interior: 16 ga., with backbend returns.

2) Exterior: 14 ga., with backbend returns.

b. Setup arc welded, with all joints, including face, flange and throat, full welded, dressed and ground smooth; no mechanical interlocking allowed.

c. Provide welded frames with temporary spreaders during shipping, storage and erection. Spreaders shall span both rabbets of frame and be located at bottom and at middle of frame.

2. Machine door frames for hardware scheduled for installation on that frame. Filler plates installed at unused openings will not be acceptable. Provide blockouts behind frame for continuous hinges.

3. Joints:

a. Dress welded joints and ground smooth, indistinguishable in completed work.

b. Make non-welded connections with tight fitting, closed joints.

c. Make joints with aligned faces and arrises.

4. Inside of frames to be grouted in masonry and concrete construction shall receive protective coating as specified herein.

B. Frame anchors:

1. Wall anchors for frame attachment to masonry construction: Adjustable, flat, minimum 18 gage corrugated or perforated, T-shaped steel anchors with leg not less than 2" wide by 10" long. Provide one anchor per jamb for each 2'-0" of height or fraction thereof. Anchors for fire-rated frames shall be labeled type.

2. Wall anchors for frame attachment to drywall partitions: Manufacturer's standard adjustable type for attachment to studs. Provide one anchor per jamb for each 2'-0" of height or fraction thereof. Anchors for fire-rated frames shall be labeled type.

3. Floor anchors: Provide frames, other than slip-on drywall type, with minimum 18 gage anchors for attachment to floor.

a. For wall conditions that do not allow for the use of a floor anchor, provide an additional jamb anchor.

b. Anchors for fire-rated frames shall be labeled type.

4. In-place masonry or concrete: 3/8" countersunk, flat head, stove bolts in expansion shields, spaced 6" maximum from top and bottom of frame and at 2'-0" o. c., maximum, between. Anchors for fire-rated frames shall be labeled type.

5. Head struts: For frames over 7'-0" high and not anchored to masonry or concrete construction, provide 1/4" by 2" steel struts spot welded to jambs, each side, extending to building structure. Attach to structure. For frames over 4'-0" in width, provide center strut at head.

2.4 ACCESSORIES:

A. Astragals: Mortised, 12 ga. material. Fire-rated "B" and "C" labeled doors shall be of type not requiring astragals to obtain rating.

2.5 PREPARATION FOR HARDWARE AND ANCHORS:

A. Reinforcement: Factory reinforce door and frame components for hardware installation in accord with ANSI A250.8-2003(R2008) and ANSI A250.6-2003.

B. Punch single leaf frames to receive three silencers; double leaf frames to receive two silencers per leaf, at head.

C. Provide grout shields where frames in masonry walls are cut or drilled.

D. Install hardware reinforcement and anchors without distortions or blemishes on exposed surfaces.

PART 3 - EXECUTION

3.1 FRAME INSTALLATION:

A. General:
1. Install hollow metal frames in accord with ANSI/SDI A250.8-2003(R2008), ANSI A250.11-2001, SDI-122-07, manufacturer's product data and approved shop drawings.
2. Frames in masonry and concrete walls and fire-rated frames shall be tightly butted to walls. For other frames, clearance between frame and interfacing wall surfaces shall be 1/16" maximum.
3. Shimming of door hinges is not an acceptable correction of door frames installed out of erection tolerance.

B. Welded frames:
1. Set welded frames in position prior to beginning partition work. Brace frames until permanent anchors are set.
2. Set anchors for frames as work progresses. Install anchors at hinge and strike levels. Install rubber bumpers and silencers in frames prior to grouting.
3. Grout frames in masonry walls.
4. Remove temporary spreaders before frame installation is complete.
5. Remove temporary braces after wall construction is complete.
6. Install welded frames in prepared openings in concrete and masonry walls using countersunk bolts and expansion shields.
7. Weld field splices in borrowed lite frames and grind smooth.

C. Fire-rated frames: Install in accord with requirements of NFPA No. 80 and ANSI A250.11-2001.

3.2 DOOR INSTALLATION:

A. General:
1. Install doors in accord with SDI-122-07, ANSI A250.8-2003(R2008), manufacturer's product data and approved shop drawings.

2. Seal tops of exterior, out-swinging doors prior to painting. Paint bottoms of doors in accord with Painting and Coating section prior to hanging doors.
3. Install hollow metal doors in frames, using hardware specified in Door Hardware section.
4. Shimming of door hinges is not an acceptable repair of warped doors or door frames out of erection tolerances.

B. Edge clearances at doors:
1. Between door and frame, at head and jambs: 1/8".
2. At meeting edges of pairs of doors and at mullions: 1/8" to 1/4" (1/8" for fire rated doors).
3. At sills without thresholds: 3/8" maximum above finish floor.
4. At sills with thresholds: 3/8" maximum above top of threshold.
5. Between face of door and door stop: 1/16".

C. Fire-rated doors: Install in accord with requirements of NFPA No. 80, SDI-118-05 and ANSI A250.11-2001.

3.3 SITE TOLERANCES:

A. Allowable erection tolerances:
1. Variation from specified clearances: +1/32".
2. Variation in face alignment, pairs of doors: +1/16".
3. Variation in face alignment between door and frame: 1/8" maximum.

3.4 CLEANING AND PROTECTION:

A. Protect hollow metal doors and frames from damage and staining until Date of Substantial Completion. Replace or repair damaged or stained components.

B. Replace components which exhibit warp, buckle or broken welds.

END OF SECTION

SECTION 08200

WOOD DOORS

PART 1 - GENERAL

1.1 SUMMARY:

A. Related work specified elsewhere:
   1. Metal door frames.
   2. Door hardware.
   3. Glazing.

1.2 SUBMITTALS:

A. Product data: Submit manufacturer's product description, indicating materials, classifications, factory finish and fabrication. Include manufacturer's proposed warranty. Indicate that doors meet specified requirements, including fire ratings. Include manufacturer's requirements for door installation, care, maintenance and cleaning to obtain specified warranties.

B. Shop drawings: Submit schedules and elevations indicating door sizes, construction, swing, fire rating, undercut, and hardware locations. Dimension and detail openings for glass lites. Indicate that doors meet specified requirements, including fire ratings.

C. Samples:
   1. Submit 4" by 4" door corner samples indicating construction for each door type.
   2. Submit a minimum of 3 samples of each face veneer, 8" by 8" in size, representative of proposed species, cut, color and grain, with proposed factory finish. Accepted samples shall indicate extremes of color, graining, defects and general quality of proposed veneers.

D. Intent to warrant and certifications: Submit an Intent to Warrant executed by authorized representative of door manufacturer, indicating that manufacturer has reviewed drawings and specifications, conditions affecting the work and the relationship of doors with related work, and that manufacturer proposes to provide warranties as referenced herein without further stipulation.

1.3 QUALITY ASSURANCE:

A. Allowable color and grain variation of natural finished doors: Color and grain shall be uniform and within range established by accepted veneer samples as specified herein. Joints in face veneers shall be inconspicuous. Adjacent doors and doors viewed together shall have similar color and grain.

B. Fire door assemblies:
   1. Door assemblies in rated walls shall have been tested in accord with NFPA 252 or UL 10C.

2. Door assemblies in corridors and smoke barriers shall have a minimum fire rating of 20 minutes and shall have been tested in accord with NFPA 252 or UL 10C without hose stream test. Assemblies shall comply with UL 1784 for draft and smoke control test; leakage may not exceed 3.0 CFM per foot of door at 0.10" of water column.
3. Fire-rated doors shall provide rating without use of salt-treated wood, or manufacturer shall provide certification that treated wood is non-hygroscopic and shall warrant door against failure or discoloration of face veneer and door finish.

C. Labeling requirements:
1. On top edge, provide each door with a label which identifies manufacturer, trade association of which he is a member, grade and type of door or industry standard with which it complies.
2. Fire-rated components shall bear factory-applied labels showing manufacturer's name, name of third-party inspection agency, fire-protection rating, and where required for doors in exit enclosures, maximum transmitted temperature end point. Permanently attach label to hinge stile of each fire-rated door.
3. Smoke and draft doors complying with UL 1784 shall be labeled as a smoke and draft control door.

D. Flush doors shall be the product of one manufacturer.

E. Face veneers shall be domestically assembled veneer facing using no rainforest-produced crossbands or backs.

F. Applicable standards; as referenced herein:
1. American National Standards Institute (ANSI).
2. ASTM International (ASTM).
3. Architectural Woodwork Institute (AWI), "Architectural Woodwork Quality Standards", 2005, herein referred to as AWI Standards.
4. Hardwood Plywood and Veneer Association (HPVA).
5. National Fire Protection Association (NFPA).
6. Underwriters Laboratories, Inc., (UL).
7. Warnock-Hersey (WH).
8. Window and Door Manufacturer's Association (WDMA).

G. Pre-installation meeting: Prior to beginning door installation work, a pre-installation meeting shall be held to review work to be accomplished.
1. Contractor, Architect, door manufacturer's representatives, and other subcontractors who have equipment relating to doors shall be present.

2. Contractor shall notify all parties at least seven days prior to time for meeting.
3. Contractor shall record minutes of meeting and distribute to attending parties.

1.4 DELIVERY, STORAGE AND HANDLING:

A. Deliver no doors to building until weatherproof storage space is available. Store doors in a space having controlled temperature and humidity. Stack doors flat, off floor, supported to prevent warpage and protected from damage and direct exposure to sunlight.

B. Seal top and bottom edges of doors, if required by manufacturer's product data to maintain warranty.

C. Protection for shop-finished doors: Protect doors during shipping and storage by enclosing in polyethylene bags. Replace doors in original packaging for shipment to site following machining and finishing. Hang pre-machined and prefinished doors without removal of packaging. Identify each door with door number on packaging. Maintain packaging in place until Date of Substantial Completion.

D. Break packaging seal on site to permit ventilation.

E. Do not walk or stack other materials on top of stacked doors. Do not drag doors across each other.

1.5 WARRANTIES:

A. Provide manufacturer's door replacement warranty against warpage, twist, delamination, telegraphing of core and manufacturing defects for the following terms:
   1. Interior solid core and mineral core doors: Lifetime of original installation.
   2. Door finish for rated doors: Five years against discoloration or failure of factory finish of fire-rated mineral core doors with salt-treated wood components.

PART 2 - PRODUCTS

2.1 FLUSH DOORS:

A. Acceptable manufacturers; subject to compliance with specified requirements:
   1. Algoma Hardwoods, Inc.
   2. Eggers Industries, Inc.
   3. Marshfield DoorSystems, Inc.
   4. Oshkosh Door Co.
   5. VT Industries, Inc.

B. General quality standard: WDMA I. S. 1-A or AWI, Section 1300, Custom Grade.

C. Glued particleboard core wood doors:
   1. Description: Meeting AWI Standards, Section 1300, five-ply veneer face construction, AWI PC5, particleboard core.
      a. Thickness: 1-3/4".

b. Adhesive bond:
   1) Type II or better.
   2) Adhesives shall not contain urea formaldehyde.

c. Blocking: Top and bottom rail and lock stile blocking shall accommodate specified hardware, without through-bolting hardware.

d. Top rail for doors indicated to receive closers: Provide 12" high top rail for doors scheduled to receive closers. Top rail shall accommodate specified hardware without through-bolting hardware.

2. Particleboard core: Single-piece particleboard meeting ANSI A208.1, Grade LD-2, DPC-1, made with binder containing no urea-formaldehyde resin.

2. Construction: Solid hardwood, engineered laminated hardwood or structural composite lumber stiles and rails glued to core; core assembly sanded for uniform thickness.

3. Crossbanding: Engineered high density fiberboard (HDF), minimum 1/16" thickness.

4. Fire resistance rating: Comply with specified requirements for tested, labeled door construction for ratings indicated on drawings.

D. Fire-rated mineral core doors:

1. Description: Five-ply non-combustible mineral composition core construction, meeting AWI Standards, Section 1300, FD Series and label requirements scheduled on drawings.
   a. Thickness: 1-3/4".
   b. Adhesive bond: Type I, containing no urea formaldehyde.

2. Core: Single piece, non-combustible, asbestos-free, mineral composite with minimum 24 pcf density when tested in accord with ASTM C303-07, with 10 percent maximum moisture absorption by weight with core in equilibrium at 90 percent relative humidity and 70° F.

3. Construction: Stiles, rails and blocking glued to core; core assembly sanded for uniform thickness. Stiles, rails and blocking shall be non-combustible composition, to receive full mortise hinge installation, with the following minimum characteristics:

   a. Screw withdrawal resistance: 600 lbs. minimum when tested in accord with ASTM D1037-06a.
   b. Split resistance: 750 lbs. average when tested in accord with ASTM D143-94(2007).
   c. Blocking: Top and bottom rail and lock stile blocking to accommodate specified hardware, meeting label requirements scheduled.

4. Crossbanding: Engineered high density fiberboard (HDF), minimum 1/16" thickness. Crossbanding shall be non-salt-treated or door finish shall be warranted by door manufacturer against failure or discoloration.

5. Fire resistance rating: Comply with specified requirements for tested, labeled door construction for ratings indicated on drawings.

6. Where rated door pairs require metal astragal for labeled construction,

astragals shall be wrapped in veneer matching door face or concealed within door edge.

E. Facing veneer for transparent finish:
1. Veneer species: White maple
2. Veneer slicing: Plain sliced panels with sequence matched veneers center matched across door width.
3. Face of door veneer matching: Book matched, center matched across width.
4. For pairs of doors and doors adjacent to other doors, provide center balance matched assembly.
6. Veneer thickness: Minimum 1/52" after sanding at 12% moisture content.
7. Adhesive bond: Type I, containing no urea formaldehyde.
8. Quality grade: A veneers.

F. Vertical stiles:
1. Stiles for transparent finish doors not requiring fire ratings: Minimum 1-3/8" wide by thickness of core with specified veneer, solid hardwood or structural composite lumber inner stile backer with edge veneer matching face veneer in specie, color and graining; no exposed fingerjoints allowed.
2. Stiles for fire-rated doors: Minimum 1-3/8" wide by thickness of core with specified veneer, solid hardwood or lamination meeting fire rating requirements; edge veneer matching face veneer.
   a. 20-minute rated pairs without metal edges or astragals: As required by manufacturer to permit positive pressure “S” label per Category H; veneer banded to match face veneer over manufacturer’s edge for improved screw holding.
   b. Mineral core doors required to meet positive pressure Category A (concealed) requirements: As required by door manufacturer.
   c. Pairs of fire-rated doors:
      1) With metal edges or metal edges and astragals: As required by door manufacturer's test data for required fire-ratings.

      2) Without metal edges or metal edges and astragals: As required by door manufacturer's test data for required fire-ratings.
      3) For 20 minute doors: Treated stiles at meeting edge.
      4) Mineral core doors required to meet positive pressure Category A (concealed) requirements: As required by door manufacturer.
5. Stile width for doors with cutouts:
   a. Non-rated doors: Provide minimum 5" of core between lock and light cutout or from edge of door to edge of cutout.
   b. Rated doors: Provide minimum 5-1/2" core between lock and cutout or from edge of door and edge of cutout.
   c. Opening next to lock: Provide minimum 10" lock stile.

G. Rails: Mill option hardwood or structural composite lumber and as required to meet positive pressure ratings.

H. Moldings and trim:
1. Furnish in same species as hardwood matching grain and color of face veneer for transparent finish, no fingerjoints allowed.
2. Moldings for solid core doors: Flush style with mitered corner joints.
3. Moldings for fire-rated doors: Manufacturer's standard matching solid hardwood, laminated wood or primed steel edge meeting fire-rating requirements.
4. Provide moldings for glass lites.

2.2 GLAZING:

A. Refer to Glazing section for tempered glazing.

2.3 FACTORY FITTING, MACHINING AND FINISHING:

A. Factory fitting and machining are required for all wood doors. Factory finishing is required for all transparent finished doors.

B. Fitting and machining:
1. Factory fit and machine doors to clearances and bevels specified.
2. Prepare for hardware installation using hardware manufacturer's templates.
   a. Locate in accord with WDMA I. S. 1.7, unless otherwise indicated.
   b. Drill pilot holes for screws and bolts.
3. Seal edges of doors and cutouts immediately following fitting and machining.

C. Openings:
1. Cut openings to receive glass lites in accord with AWI requirements or WDMA I. S. 1-A.
2. Seal edges of cutout immediately following cutting using one coat of solvent type sealer.
3. Install glass lites without looseness or rattle. Trim shall have mitered corner joints and shall conceal edges of cutout and door core.
4. Protect door faces from damage during cutting.
5. Prepare and glaze openings in fire-rated doors in accord with NFPA and UL requirements.

D. Clearances and bevel:
1. Hinge stile: 1/8".
2. Lock stile: 1/8".
3. Top: 1/8".
4. Bottom: 1/4" above floor finish or threshold, except where undercutting is indicated. Confirm installed floor covering thickness before cutting door

bottom edges.
5. Meeting stiles, pairs of doors: 1/8".
6. Bevel: 1/8" in 2".

E. Sanding: Factory sand doors to comply with AWI Standards, Section 1300.

F. Factory finish:
1. Type: AWI Standards, Section 1500, Custom Grade, Conversion Varnish or Catalyzed Polyurethane system, filled finish. Color and sheen shall be as selected by Architect from manufacturer's standard color and sheen range.
2. Finish faces and edges of doors, including mortises and cutouts.

2.4 SOURCE QUALITY CONTROL:

A. Fabrication tolerances:
1. Overall dimension: ±1/16".
2. Width: +1/32".
3. Maximum warp, bow, cup or twist: 1/4".
4. Squareness: Maximum 1/8" difference in diagonal measurement.
5. Hardware locations: -0", +1/32".

PART 3 - EXECUTION

3.1 INSTALLATION:

A. Acclimatization: Allow doors to become acclimated to finished space conditions a minimum of 72 hours before hanging.
B. Preparation: Verify that framed openings are installed within specified tolerances. Do not install doors in frames which are not installed within size and plumbness tolerances.

C. Installation:
1. Install doors in accord with manufacturer's product data using scheduled hardware. Install using threaded-to-the-head wood screws furnished by hardware manufacturer.
2. Anchor hardware in correct position and alignment.
3. Adjust hardware and door for proper function and for smooth, free operation, latching without force or excess clearance, within specified clearances and tolerances.

D. Fire-rated doors: Install in accord with UL requirements and NFPA No. 80-92 and No. 105-93.

E. Erection tolerances:
1. Variation from specified clearances: +1/32", -0".
2. Maximum variation in edge alignment, pairs of doors: 1/16".

F. Replace doors with defects in material, finish, fit or machining.

END OF SECTION

SECTION 08220

FIBERGLASS REINFORCED PLASTIC (FRP) DOORS AND FRAMES

PART 1 - GENERAL

1.1 SUMMARY:

A. Work of this section includes fiberglass reinforced plastic doors and frames.

B. Related work specified elsewhere:
1. Concrete unit masonry.
2. Hollow metal door frames.
3. Door hardware.
4. Glazing.

1.2 SUBMITTALS:

A. Shop drawings:
1. Indicate frame configuration, anchor types and spacing, location of cutouts for hardware, reinforcement and finish.
2. Indicate door elevations and internal reinforcement.

B. Product data: Submit manufacturer's product literature, fabrication descriptions and installation instructions.

1.3 QUALITY ASSURANCE:

A. General qualifications:
1. Manufacturer qualifications: A company that specializes in manufacturing FRP doors and frames with a minimum of 10 years experience.
2. Obtain FRP doors and FRP frames from a single manufacturer to ensure consistent quality.

B. Fire-rated door and panel construction shall conform to products tested under ASTM E152, UL10C and NFPA 252.

C. Installed doors, panel and frames shall comply with NFPA 80 for fire-rated class, ANSI A117.1 specifications for handicap accessibility, ADA requirements, and ANSI A151.1 Mod. swing cycle test in excess of 1,000,000 cycles with no failure of design features of the door and frame.

D. Flame spread: All FRP component parts, including gelcoat finish, shall have a flame spread classification of 25 or less per ASTM E84-10b and shall be self extinguishing per ASTM D635-10 unless operating conditions dictate otherwise.

1.4 DELIVERY, STORAGE AND PROTECTION:

A. Deliver, handle and store doors and frames at project site in such a manner as to prevent damage.
   1. Doors shall not be received before building is enclosed.
   2. Only remove cartons upon arrival of doors at project site if cartons are wet or damaged.
   3. Store doors out of weather and/or extreme temperatures.
   4. Store doors in a vertical position on blocking, clear of floor and with blocking between doors to permit air circulation between doors.

B. Damaged or otherwise unsuitable doors and frames shall be immediately removed from project site.

1.5 WARRANTY:

A. Provide manufacturer's ten (10) year warranty that materials will be free from defects in materials and workmanship and manufacturer's lifetime warranty that materials will be free from degradation or failure due to corrosion, provided that structural integrity of doors and frames have not been violated or compromised. (No unauthorized cuts, bores, or other structural alterations affecting the core of door, or structure of frame.)

B. Warranties shall begin on Date of Substantial Completion.

PART 2 – PRODUCTS

2.1 MANUFACTURERS:

A. Acceptable manufacturers:
   1. Basis of design: Corrim Company.
   2. Chem-Pruf Door Co., Ltd.
   3. Corrosion Guard Products, Corguard.

2.2 FRP DOORS:

A. Door fabrication:
   1. Total door thickness shall be a nominal 1-3/4" thick.
   2. Lock stiles on non-rated and rated active leaves shall be factory beveled 1/8" in 2".
   3. Provide doors with completely seamless construction on all six (6) surfaces.

B. Face sheets: FRP face sheets shall be manufactured using a corrosion resistant resin system with light stabilizing additives. Resin shall be reinforced with fiberglass, 50% average by weight for enhanced strength. Face sheets shall be a minimum of 0.125 inch thick fiberglass. Face sheets shall be smooth, seamless finish.

C. Stiles and rails: Stiles and rails shall be 1-1/2“ square pultruded fiberglass tubes. Non-rated and 20 minute doors shall have a full width horizontal 1-1/2" square pultruded fiberglass tube every 24" in height for internal reinforcement. A 1-1/2" square solid fiberglass block shall be used at hardware reinforcements and corner intersections. A minimum of 1,150 pounds screw withdrawal force shall be required per screw. Bottom rail shall allow for 1-1/4" of height alterability without loss of the panel’s integrity.

1. No metal or wood reinforcements, including #2 SPF (Spruce Pine Fir), will be allowed in any part of the stile and rail configuration.

D. Core options:

1. Polyurethane foam core: A 1-1/2" thick rigid block of polyurethane shall be laminated to the interior of the panels. “R” factor shall be 12. Polyurethane insulation shall be Class A and CFC free. Foam properties shall comply with ASTM E84-10b and The International Building Code (IBC).
2. Mineral Core: For 30 minute to 90 minute fire rated FRP doors.

E. Hardware preparations: Doors shall be reinforced and mortised for hardware with 1-1/2" x 1-1/2" of solid fiberglass to allow application of hinges and locks, in accord with hardware schedule, hardware manufacturer’s product data and templates.

1. Reinforcement blocking: Non-swelling polymer or firestop blocking shall be used for lockset, surface mounted hardware and thru-bolted hardware blocking.
2. Pilot holes for full mortise butt hinges shall be pre-drilled by factory.
3. Hardware shall be attached / installed by using pilot hole and stainless steel wood screws.

F. Door accessories:

1. Glazing: Glazing support structures shall ensure that the glass area is weather sealed as not to permit moisture from entering the core of the door. This shall be accomplished by utilizing pultruded 1-1/2" square FRP tubes to fabricate the window opening. Glazing shall allow for ready access for repair in the event of damage or replacement, without affecting the sealed integrity of the cutout in the door panel itself. Openings cut directly into the core material will not be allowed.
2. Fasteners: Provide countersunk stainless steel fasteners as required for glazing openings and louvers.
3. Transoms: Transom panels shall be identical to doors in construction, materials, thickness, color and reinforcement.
4. Astragals: Fabricate astragals for pairs of doors with FRP material of manufacturer’s standard flat design.

2.3 FRP FRAMES:

A. Fabrication: FRP frames shall be rigid, neat in appearance, free from defects and finish shall match doors. Fabricate FRP doors and frames as indicated on drawings and in accord with shop drawings. Field measurements shall be taken as required for coordinating with adjoining work.

B. Provide frames for doors, transoms, sidelites and borrowed lites, as required.
   1. Frames shall be 100% pultruded fiberglass with an average 50% glass content by weight which shall result in an industrial fiberglass frame as strong as a 14 gauge hollow metal frame.
   2. Non-rated and 20 minute UL labeled: Standard one piece FRP profile with integral stop: 5-3/4” x 2” equal rabbet.
   3. 30 – 90 minute UL labeled FRP Frames: Standard one piece FRP profile with integral stop: 5-3/4” x 2” equal rabbet. (*Frames that must be grouted solid with mortar in the field to achieve label are not acceptable.)*
   4. Head and jamb members shall be standard 45 degree miter, providing a neatly mitered corner connection, fabricated for knocked down (KD) field assembly.

C. Reinforcements and braces / supports:
   1. Frames shall be reinforced and mortised for hardware in accord with the hardware schedule, manufacturer’s product data and templates. Absolutely no metal reinforcements will be allowed in any part of the FRP frame configuration.
   2. Corner reinforcement: 4" by 4" by 5-3/8" by 1/4" thick pultruded fiberglass angle. Attached to head bar at factory using stainless steel screws.
   3. Mortise hinge reinforcement: 3" by 7" by 9/16" (or 3/8") thick FRP material attached to frame by means of bonding and stainless steel countersunk screws.
   4. Closer reinforcement: 1-1/2" by 19" by 3/16" thick FRP material attached to frame by means of bonding.
   5. Strike reinforcement: 1-1/2" by 9" by 3/4" thick FRP material attached to frame by means of bonding and stainless steel countersunk screws.
   6. Anchoring systems: Provide at least three (3) anchors in each jamb of frames up to 90" high and one (1) additional anchor for each 30" in height above 90", in shapes, sizes and spacing indicated or required for anchorage into adjoining wall construction.
      a. New masonry: T-strap or wire anchor.
      b. New stud (before sheathing): New stud anchor.
      c. Butt existing wall: Existing opening anchor; masonry, steel or wood.
      d. Wrap existing wall: Compression anchor.

2.4 FINISH:

A. Gelcoat: Seamless 25 mil matte gelcoat (smooth faces only).
   1. Colors: As selected by Architect from manufacturer’s premium color range.
   2. Finish on door and frame units shall match.

PART 3 - EXECUTION

3.1 EXAMINATION:

A. Examine substrate and conditions under which fiberglass reinforced plastic work is to be installed and correct conditions detrimental to the proper and timely completion of the work. Do not proceed with the work until unsatisfactory conditions have been corrected in a manner acceptable to installer.

3.2 INSTALLATION:

A. General: Install FRP doors, frames and accessories in accord with approved shop drawings, NFPA 80 standards at fire-rated openings, and as herein specified. Installation shall be similar to that of hollow metal doors and frames, and in accord with FRP manufacturer's product data.

B. Frame installation:
1. Place frames prior to construction of enclosing walls and ceilings. Set frames accurately in position, plumbed, aligned, and braced until permanent anchors are set. After wall construction is completed, remove temporary braces and spreaders leaving surfaces smooth and undamaged. Frame shall not be drilled for brace supports as finish may be damaged.
2. In masonry construction, locate three (3) wall anchors per jamb at hinge and strike levels. Grout frames full of mortar at jambs and build anchors into joints as walls are laid up. Apply a continuous bead of silicone sealant between head and jamb at miter joint.

C. Door installation: Fit FRP doors accurately in frames, within clearances specified herein.

3.3 TOLERANCES:

A. Maximum diagonal distortion: 1/4" measured with a straight edge, corner to corner. Maximum measurable plane shall be 4'-0" x 7'-0".

3.4 ADJUSTING:

A. At Substantial Completion, adjust operable components to ensure proper installation and that they function smooth and freely.

3.5 CLEANING:

A. Remove dirt and excess sealant from exposed surfaces. Follow manufacturer's product data cleaning techniques and procedures for cleaning surfaces.

B. Use cleaning products that will not scratch or damage surfaces, and that are recommended by manufacturer's product data.

C. Remove debris from project site.

END OF SECTION

SECTION 08220

FIBERGLASS REINFORCED PLASTIC (FRP) DOORS AND FRAMES

PART 1 - GENERAL

1.1 SUMMARY:

A. Work of this section includes fiberglass reinforced plastic doors and frames.

B. Related work specified elsewhere:
1. Concrete unit masonry.
2. Hollow metal door frames.
3. Door hardware.
4. Glazing.

1.2 SUBMITTALS:

A. Shop drawings:
1. Indicate frame configuration, anchor types and spacing, location of cutouts for hardware, reinforcement and finish.
2. Indicate door elevations and internal reinforcement.

B. Product data: Submit manufacturer's product literature, fabrication descriptions and installation instructions.

1.3 QUALITY ASSURANCE:

A. General qualifications:
1. Manufacturer qualifications: A company that specializes in manufacturing FRP doors and frames with a minimum of 10 years experience.
2. Obtain FRP doors and FRP frames from a single manufacturer to ensure consistent quality.

B. Fire-rated door and panel construction shall conform to products tested under ASTM E152, UL10C and NFPA 252.

C. Installed doors, panel and frames shall comply with NFPA 80 for fire-rated class, ANSI A117.1 specifications for handicap accessibility, ADA requirements, and ANSI A151.1 Mod. swing cycle test in excess of 1,000,000 cycles with no failure of design features of the door and frame.

D. Flame spread: All FRP component parts, including gelcoat finish, shall have a flame spread classification of 25 or less per ASTM E84-10b and shall be self extinguishing per ASTM D635-10 unless operating conditions dictate otherwise.

1.4 DELIVERY, STORAGE AND PROTECTION:

A. Deliver, handle and store doors and frames at project site in such a manner as to prevent damage.
   1. Doors shall not be received before building is enclosed.
   2. Only remove cartons upon arrival of doors at project site if cartons are wet or damaged.
   3. Store doors out of weather and/or extreme temperatures.
   4. Store doors in a vertical position on blocking, clear of floor and with blocking between doors to permit air circulation between doors.

B. Damaged or otherwise unsuitable doors and frames shall be immediately removed from project site.

1.5 WARRANTY:

A. Provide manufacturer's ten (10) year warranty that materials will be free from defects in materials and workmanship and manufacturer's lifetime warranty that materials will be free from degradation or failure due to corrosion, provided that structural integrity of doors and frames have not been violated or compromised. (No unauthorized cuts, bores, or other structural alterations affecting the core of door, or structure of frame.)

B. Warranties shall begin on Date of Substantial Completion.

PART 2 – PRODUCTS

2.1 MANUFACTURERS:

A. Acceptable manufacturers:
   1. Basis of design: Corrim Company.
   2. Chem-Pruf Door Co., Ltd.
   3. Corrosion Guard Products, Corguard.

2.2 FRP DOORS:

A. Door fabrication:
   1. Total door thickness shall be a nominal 1-3/4" thick.
   2. Lock stiles on non-rated and rated active leaves shall be factory beveled 1/8" in 2".
   3. Provide doors with completely seamless construction on all six (6) surfaces.

B. Face sheets: FRP face sheets shall be manufactured using a corrosion resistant resin system with light stabilizing additives. Resin shall be reinforced with fiberglass, 50% average by weight for enhanced strength. Face sheets shall be a minimum of 0.125 inch thick fiberglass. Face sheets shall be smooth, seamless finish.

C. Stiles and rails: Stiles and rails shall be 1-1/2“ square pultruded fiberglass tubes. Non-rated and 20 minute doors shall have a full width horizontal 1-1/2" square pultruded fiberglass tube every 24" in height for internal reinforcement. A 1-1/2" square solid fiberglass block shall be used at hardware reinforcements and corner intersections. A minimum of 1,150 pounds screw withdrawal force shall be required per screw. Bottom rail shall allow for 1-1/4" of height alterability without loss of the panel’s integrity.

1. No metal or wood reinforcements, including #2 SPF (Spruce Pine Fir), will be allowed in any part of the stile and rail configuration.

D. Core options:

1. Polyurethane foam core: A 1-1/2" thick rigid block of polyurethane shall be laminated to the interior of the panels. “R” factor shall be 12. Polyurethane insulation shall be Class A and CFC free. Foam properties shall comply with ASTM E84-10b and The International Building Code (IBC).
2. Mineral Core: For 30 minute to 90 minute fire rated FRP doors.

E. Hardware preparations: Doors shall be reinforced and mortised for hardware with 1-1/2" x 1-1/2" of solid fiberglass to allow application of hinges and locks, in accord with hardware schedule, hardware manufacturer’s product data and templates.

1. Reinforcement blocking: Non-swelling polymer or firestop blocking shall be used for lockset, surface mounted hardware and thru-bolted hardware blocking.
2. Pilot holes for full mortise butt hinges shall be pre-drilled by factory.
3. Hardware shall be attached / installed by using pilot hole and stainless steel wood screws.

F. Door accessories:

1. Glazing: Glazing support structures shall ensure that the glass area is weather sealed as not to permit moisture from entering the core of the door. This shall be accomplished by utilizing pultruded 1-1/2" square FRP tubes to fabricate the window opening. Glazing shall allow for ready access for repair in the event of damage or replacement, without affecting the sealed integrity of the cutout in the door panel itself. Openings cut directly into the core material will not be allowed.
2. Fasteners: Provide countersunk stainless steel fasteners as required for glazing openings and louvers.
3. Transoms: Transom panels shall be identical to doors in construction, materials, thickness, color and reinforcement.
4. Astragals: Fabricate astragals for pairs of doors with FRP material of manufacturer’s standard flat design.

2.3 FRP FRAMES:

A. Fabrication: FRP frames shall be rigid, neat in appearance, free from defects and finish shall match doors. Fabricate FRP doors and frames as indicated on drawings and in accord with shop drawings. Field measurements shall be taken as required for coordinating with adjoining work.

B. Provide frames for doors, transoms, sidelites and borrowed lites, as required.
   1. Frames shall be 100% pultruded fiberglass with an average 50% glass content by weight which shall result in an industrial fiberglass frame as strong as a 14 gauge hollow metal frame.
   2. Non-rated and 20 minute UL labeled: Standard one piece FRP profile with integral stop: 5-3/4” x 2” equal rabbet.
   3. 30 – 90 minute UL labeled FRP Frames: Standard one piece FRP profile with integral stop: 5-3/4” x 2” equal rabbet. (*Frames that must be grouted solid with mortar in the field to achieve label are not acceptable.)*
   4. Head and jamb members shall be standard 45 degree miter, providing a neatly mitered corner connection, fabricated for knocked down (KD) field assembly.

C. Reinforcements and braces / supports:
   1. Frames shall be reinforced and mortised for hardware in accord with the hardware schedule, manufacturer’s product data and templates. Absolutely no metal reinforcements will be allowed in any part of the FRP frame configuration.
   2. Corner reinforcement: 4" by 4" by 5-3/8" by 1/4" thick pultruded fiberglass angle. Attached to head bar at factory using stainless steel screws.
   3. Mortise hinge reinforcement: 3" by 7" by 9/16" (or 3/8") thick FRP material attached to frame by means of bonding and stainless steel countersunk screws.
   4. Closer reinforcement: 1-1/2" by 19" by 3/16" thick FRP material attached to frame by means of bonding.
   5. Strike reinforcement: 1-1/2" by 9" by 3/4" thick FRP material attached to frame by means of bonding and stainless steel countersunk screws.
   6. Anchoring systems: Provide at least three (3) anchors in each jamb of frames up to 90" high and one (1) additional anchor for each 30" in height above 90", in shapes, sizes and spacing indicated or required for anchorage into adjoining wall construction.
      a. New masonry: T-strap or wire anchor.
      b. New stud (before sheathing): New stud anchor.
      c. Butt existing wall: Existing opening anchor; masonry, steel or wood.
      d. Wrap existing wall: Compression anchor.

2.4 FINISH:

A. Gelcoat: Seamless 25 mil matte gelcoat (smooth faces only).
   1. Colors: As selected by Architect from manufacturer’s premium color range.
   2. Finish on door and frame units shall match.

PART 3 - EXECUTION

3.1 EXAMINATION:

A. Examine substrate and conditions under which fiberglass reinforced plastic work is to be installed and correct conditions detrimental to the proper and timely completion of the work. Do not proceed with the work until unsatisfactory conditions have been corrected in a manner acceptable to installer.

3.2 INSTALLATION:

A. General: Install FRP doors, frames and accessories in accord with approved shop drawings, NFPA 80 standards at fire-rated openings, and as herein specified. Installation shall be similar to that of hollow metal doors and frames, and in accord with FRP manufacturer's product data.

B. Frame installation:
1. Place frames prior to construction of enclosing walls and ceilings. Set frames accurately in position, plumbed, aligned, and braced until permanent anchors are set. After wall construction is completed, remove temporary braces and spreaders leaving surfaces smooth and undamaged. Frame shall not be drilled for brace supports as finish may be damaged.
2. In masonry construction, locate three (3) wall anchors per jamb at hinge and strike levels. Grout frames full of mortar at jambs and build anchors into joints as walls are laid up. Apply a continuous bead of silicone sealant between head and jamb at miter joint.

C. Door installation: Fit FRP doors accurately in frames, within clearances specified herein.

3.3 TOLERANCES:

A. Maximum diagonal distortion: 1/4" measured with a straight edge, corner to corner. Maximum measurable plane shall be 4'-0" x 7'-0".

3.4 ADJUSTING:

A. At Substantial Completion, adjust operable components to ensure proper installation and that they function smooth and freely.

3.5 CLEANING:

A. Remove dirt and excess sealant from exposed surfaces. Follow manufacturer's product data cleaning techniques and procedures for cleaning surfaces.

B. Use cleaning products that will not scratch or damage surfaces, and that are recommended by manufacturer's product data.

C. Remove debris from project site.

END OF SECTION
SECTION 08331

OVERHEAD ROLL-UP DOORS

PART 1 - GENERAL

1.1 SUMMARY:

A. Work of this section includes:
1. Overhead coiling exterior mounted, insulated doors.
2. Overhead coiling interior mounted, insulated doors.
3. Interior non-insulated doors.

B. Related work specified elsewhere:
1. Metal Fabrications: Support framing and framed opening.
2. Door Hardware: Product Requirements for cylinder core and keys.
3. Painting and Coating: Field applied finish.
4. Division 26 - Raceway and Boxes: Conduit from electric circuit to door operator and from door operator to control station.
5. Division 26 - Wiring Connections: Power to disconnect.

1.2 REFERENCES:

A. ASTM A653 - Standard Specification for Steel Sheet, Zinc-Coated (Galvanized) or Zinc-Iron Alloy-Coated (Galvannealed) by the Hot-Dip Process.

B. ASTM A666 - Standard Specification for Austenitic Stainless Steel Sheet, Strip, Plate, and Flat Bar.

C. ASTM A924 - Standard Specification for General Requirements for Steel Sheet, Metallic-Coated by the Hot-Dip Process.

D. ASTM B221 - Standard Specification for Aluminum and Aluminum-Alloy Extruded Bars, Rods, Wire, Profiles, and Tubes.

E. NEMA 250 - Enclosures for Electrical Equipment (1000 Volts Maximum).

F. NEMA MG 1 - Motors and Generators.

1.3 DESIGN / PERFORMANCE REQUIREMENTS

A. Overhead coiling insulated doors:

1. Wind Loads: Design door assembly to withstand wind/suction load of 20 psf without damage to door or assembly components.
2. Operation: Design door assembly, including operator, to operate for not less than 20,000 cycles.

B. Single-source responsibility: provide doors, tracks, motors, and accessories from one manufacturer for each type of door. Provide secondary components from source acceptable to manufacturer of primary components.

C. Products Requiring Electrical Connection: Listed and classified by Underwriters Laboratories, Inc. acceptable to authority having jurisdiction as suitable for purpose specified.

1.4 SUBMITTALS:

A. Product data: Manufacturer's data sheets on each product to be used, including:
1. Preparation instructions and recommendations.
2. Storage and handling requirements and recommendations.
3. Details of construction and fabrication.
4. Installation instructions.

B. Shop drawings: Include detailed plans, elevations, details of framing members, anchoring methods, required clearances, hardware, and accessories. Include relationship with adjacent construction.

C. Selection samples: For each finish product specified, two complete sets of color chips representing manufacturer's full range of available colors and patterns.

D. Verification samples: For each finish product specified, two samples, minimum size 6 inches (150 mm) long, representing actual product, color, and patterns.

E. Manufacturer's certificates: Certify products meet or exceed specified requirements.

F. Operation and maintenance data: Submit lubrication requirements and frequency, and periodic adjustments required.

1.5 QUALITY ASSURANCE:

A. Manufacturer qualifications: Company specializing in performing Work of this section with a minimum of five years experience in the fabrication and installation of security closures.

B. Installer qualifications: Installer Qualifications: Company specializing in performing Work of this section with minimum three years and approved by manufacturer.

C. Mock-Up: Provide a mock-up for evaluation of surface preparation techniques

and application workmanship.
1. Finish areas designated by Architect.
2. Do not proceed with remaining work until workmanship, color, and sheen are approved by Architect.
3. Refinish mock-up area as required to produce acceptable work.

1.6 DELIVERY, STORAGE, AND HANDLING:

A. Store products in manufacturer's unopened packaging until ready for installation.

B. Protect materials from exposure to moisture. Do not deliver until after wet work is complete and dry.

C. Store materials in a dry, warm, ventilated weathertight location.

1.7 PROJECT CONDITIONS:

A. Maintain environmental conditions (temperature, humidity, and ventilation) within limits recommended by manufacturer for optimum results. Do not install products under environmental conditions outside manufacturer's absolute limits.

1.8 COORDINATION:

A. Coordinate Work with other operations and installation of adjacent materials to avoid damage to installed materials.

1.9 WARRANTY:

A. Warranty: Manufacturer’s door and operators system warranty for 10 year against delamination of polyurethane foam from steel face and all other components for 3 years or 20,000 cycles, whichever comes first.

B. Warranty: Manufacturer’s door warranty for 2 years for all parts and components.

PART 2 PRODUCTS

2.1 MANUFACTURERS:

A. Acceptable manufacturers:
1. Basis of design: Overhead Door Corp.
   a. Door Type A: Overhead Coiling Stormtite Insulated Service Doors: 625 Series.
   b. Door Type B: Overhead Coiling Stormtite Insulated Service Doors: 625 Series.
   c. Door Type C: Overhead Coiling Stormtite Service Doors: 620 Series.
2. Clopay Building Products Co.
3. The Cookson Co.
4. Cornell Iron Works.

2.2 INSULATED OVERHEAD COILING SERVICE DOORS; TYPE A AND B:

A. Curtain: Interlocking roll-formed slats as specified following. Endlocks shall be attached to each end of alternate slats to prevent lateral movement.
   1. Flat profile Overhead Door Type F-265i for doors up to 40 feet (12.19 m) wide.
   2. Front slat fabricated of aluminum .040".
   3. Back slat fabricated of aluminum .024".
   4. Slat cavity filled with CFC-free foamed-in-place, polyurethane insulation.
      a. R-Value: 7.7, U-Value: 0.13.
      b. Sound Rating: STC-21.
   5. Finish: Slats and hood shall be aluminum finished as follows:
      a. PowderGuard Weathered Finish: Industrial textured powder coat providing a thicker, more scratch resistant coat. Apply to entire door system including slats, guides, bottom bar and head plate.
      b. Colors: Custom colors seleced by Architect.

B. Weatherseals:
   1. Vinyl bottom seal, exterior guide and internal hood seals.
   2. Interior guide weatherseal.
   3. Lintel weatherseal.

C. Bottom Bar: Extruded aluminum angle minimum thickness 1/8" bolted back to back to reinforce curtain in the guides.

D. Guides: Three structural steel angles.
   a. Finish: PowderGuard Weathered finish with iron/black powder.

E. Brackets: Galvanized steel to support counterbalance, curtain and hood.

F. Counterbalance: Helical torsion spring type housed in a steel tube or pipe barrel, supporting the curtain with deflection limited to 0.03 inch per foot of span. Counterbalance is adjustable by means of an adjusting tension wheel.

G. Hood: Aluminum.
   1. With intermediate supports as required.
   2. With internal hood baffle weatherseal.

H. Electric motor operation: Provide UL listed electric operator, size as recommended by manufacturer to move door in either direction at not less than 2/3 foot nor more than 1 foot per second.
   1. Sensing Edge Protection: Pneumatic sensing edge.
   2. Operator Controls:
      a. Door Type A: Push-button and key operated control stations with open, close, and stop buttons; surface mounted; exterior location.

b. Door Type B: Push-button operated control stations with open, close, and stop buttons; surface mounted; interior location.

3. Motor Voltage: 480 three phase, 60 Hz.

I. Locking:

1. Provide slide bolts each jamb for securing bottom bar to guide; each slide bolt with padlocking eye. Weld slide bolt to door interior.
2. Provide electric interlocks to prevent door motor operation when lock bolts are engaged in guides.

J. Wall mounting condition:

a. Type A door: Exterior face-of-wall mounting.
b. Type B Door: Interior face-of wall mounting.

2.3 OVERHEAD COILING SERVICE DOORS; TYPE C:

A. Curtain: Interlocking roll-formed slats as specified following. Endlocks shall be attached to each end of alternate slats to prevent lateral movement.

1. Flat profile Overhead Door Type F-265, fabricated of 18 gauge aluminum.
2. Finish aluminum slats and hood as follows:
   a. PowderGuard Weathered Finish: Industrial textured powder coat providing a thicker, more scratch resistant coat. Apply to entire door system including slats, guides, bottom bar and head plate.
   b. Colors: Custom colors as selected by Architect.

B. Weatherseals:

1. Vinyl bottom seal, exterior guide and internal hood seals.
2. Interior guide weatherseal.
3. Lintel weatherseal.

C. Bottom bar:

1. Extruded aluminum for doors up to 15 feet 4 inches (4.67 m) wide.
2. Two primed steel angles for doors over 15 feet 4 inches (4.67 m) wide.
3. Two galvanized steel angles.

D. Guides:

1. Roll-formed galvanized steel shapes.
2. Finish: PowderGuard Weathered finish with iron/black powder.

E. Brackets:

1. Hot rolled prime painted steel to support counterbalance, curtain and hood.
2. Galvanized steel to support counterbalance, curtain and hood.

F. Counterbalance: Helical torsion spring type housed in a steel tube or pipe barrel, supporting the curtain with deflection limited to 0.03 inch per foot of span. Counterbalance is adjustable by means of an adjusting tension wheel.

G. Hood: Aluminum:

1. With intermediate supports as required

2. With internal hood baffle weatherseal.

H. Chain hoist for doors over 96 SF.

I. Locking:
1. Two interior bottom bar slide bolts for manually operated doors.
2. Interior bottom bar slide bolt with chain hoist operation.
3. Chain keeper locks for chain hoist operation.

J. Wall mounting condition: Face-of-wall mounting.

PART 3 - EXECUTION

3.1 EXAMINATION

A. Verify opening sizes, tolerances and conditions are acceptable.

B. Examine conditions of substrates, supports, and other conditions under which this work is to be performed.

C. If substrate preparation is the responsibility of another installer, notify Architect of unsatisfactory preparation before proceeding.

3.2 PREPARATION

A. Clean surfaces thoroughly prior to installation.

B. Prepare surfaces using the methods recommended by the manufacturer for achieving the best result for the substrate under the project conditions.

3.3 INSTALLATION

A. Install in accordance with manufacturer's instructions.

B. Use anchorage devices to securely fasten assembly to wall construction and building framing without distortion or stress.

C. Securely and rigidly brace components suspended from structure. Secure guides to structural members only.

D. Fit and align assembly including hardware; level and plumb, to provide smooth operation.

E. Coordinate installation of electrical service with Division 26 - Electrical. Complete wiring from disconnect to unit components.

F. Coordinate installation of sealants and backing materials at frame perimeter as specified in Joint Sealants section.

G. Install perimeter trim and closures.

H. Instruct Owner's personnel in proper operating procedures and maintenance schedule.

3.4 ADJUSTING

A. Test for proper operation and adjust as necessary to provide proper operation without binding or distortion.

B. Adjust hardware and operating assemblies for smooth and noiseless operation.

3.5 CLEANING:

A. Clean curtain and components using non-abrasive materials and methods recommended by manufacturer.

B. Remove labels and visible markings.

C. Touch-up, repair or replace damaged products before Substantial Completion.

3.6 PROTECTION:

A. Protect installed products until completion of project.

END OF SECTION

SECTION 08410

ALUMINUM-FRAMED STOREFRONTS

PART 1 - GENERAL

1.1 SUMMARY:

A. Related work specified elsewhere:
1. Glazed aluminum curtain walls.
2. Glazing.

1.2 PERFORMANCE REQUIREMENTS:

A. Design criteria; glazed storefront framing without doors or operable vents:
1. Design storefront framing systems to provide for such expansion and contraction of component materials as will be caused by a surface temperature range of 180°F. without causing buckling, stresses on glass, failure of joint seals, undue stress on structural elements, damaging loads on fasteners, reduction of performance, or other detrimental effects.
2. Structural performance:
   a. Complete storefront framing system shall be designed to withstand wind loading complying with the International Building Code, 2009 Edition loads acting normal to wall plane. Test per ASTM E330-02, Procedure A.
   b. Deflection of framing members in a direction normal to wall plane, when subjected to a uniform load deflection test at design pressures specified above, in accord with ASTM E330-02, Procedure A, shall not exceed 1/175 of its clear span except that when a plastered surface subjected bending is affected, deflection shall not exceed 1/360 of the span.
   c. No glass breakage. Conduct uniform load structural test in accord with ASTM E330-02, Procedure A.
      1) Inward and outward test pressures shall be equal to 1.5 times inward and outward acting design wind pressures specified herein.
      2) At conclusion of tests, there shall be no glass breakage, permanent damage to fasteners or anchors, hardware parts or actuating mechanism.
   d. Deflection of members in a direction parallel to wall plane, when carrying their full load, shall not exceed an amount which will reduce the glass bite below 75% of the design dimension and the member shall have a 1/8" minimum clearance between itself and the top of the fixed panel, glass, or other fixed part immediately below.

3. Static pressure air infiltration of exterior storefront: Air leakage rate through fixed light areas of storefront system shall not exceed 0.1 cfm per

square foot when tested in accord with ASTM E283-04 at a differential static pressure of 6.24 psf.

4. Static pressure water infiltration of exterior storefront:
   a. Water penetration is defined as the appearance of uncontrolled water other than condensation on the indoor face of wall construction.
   b. Make provision for water entering at joints and condensation occurring within wall construction to drain to exterior face.
   c. Fixed light areas of storefront shall permit no uncontrolled water penetration when tested in accord with ASTM E331-00(2009). Differential static pressure used in the test shall be 10% of the upward acting design wind load specified herein but not less than:
      1) Exterior: 25 psf.
      2) Interior: 10 psf.
5. Thermal performance:
   a. Fixed area of the storefront shall have a minimum condensation resistance factor, CRF of 78 when tested in accord with AAMA 1503.1 and NFRC 100.
   b. Fixed light area of storefront shall have a maximum thermal transmittance not exceeding a U-value of 0.44 BTUH/ft^2 /degree F. when tested in accord with AAMA 1503.1.
6. Forced entry resistance: 300 lbs. satisfactory.

1.3 SUBMITTALS:

A. Shop drawings: Indicate in elevation with sections and details at full scale. Include glass and metal thicknesses, joining details, field connections, anchorage, provisions for expansion, fastening and sealing methods, splice details, reinforcement, metal finishes and glazing accessories. Indicate relationship to adjacent work. Indicate compliance with specified design criteria.

B. Product data: Provide manufacturer's complete product description, including test reports, certifying that system meets specified design criteria. Submit structural calculations for project conditions.

C. Test reports: Submit for Architect's information only.
   1. Submit reports by an independent Testing Laboratory that storefront system proposed for use has been tested for compliance with specified design criteria.
   2. Tests shall have been made for essentially similar systems having similar glass sizes, mullion lengths, reinforcement and methods of attachment.
   3. Tests shall indicate satisfactory testing to at least structural performance criteria specified.
   4. If test data is not available for proposed systems or if data does not represent project conditions, Contractor shall be responsible for securing satisfactory tests by an independent Testing Agency acceptable to Architect. Costs for such testing shall be borne by Contractor.

D. Glass manufacturer's approval: Indicate on shop drawings, or by letter prior to submission of shop drawings, that selected glass manufacturers have reviewed and approved details, including glass bite, clearances, system weepage, air circulation around interior window treatments, shading by exterior building components and glazing methods.

E. Samples:
1. Visual samples: Submit minimum 6" by 6" samples indicating full range of color to be expected in finished work.
2. Sealant adhesion test samples: Provide samples of specified metal finish for adhesion tests by sealant manufacturer, as specified in Joint Sealants section.

F. Maintenance data: Submit as part of Contract closeout documents. Give instructions for general maintenance and repair of surfaces and finishes. Include detailed re-glazing procedures.

1.4 QUALITY ASSURANCE:

A. Applicable standards; standards of the following, as referenced herein:
1. Aluminum Association (AA).
2. American Architectural Manufacturers Association (AAMA).
3. American Welding Society (AWS).
4. ASTM International (ASTM).
5. Glass Association of North America (GANA).
6. Society for Protective Coatings (SSPC).

1.5 JOB CONDITIONS:

A. Protection: Protect aluminum surfaces from contact with lime, mortar, cement, acids and other harmful surfaces and from careless handling, storage or machining.

1.6 WARRANTY:

A. Manufacturer’s warranty: Warrant the work of this section for five years from Date of Substantial Completion to be free from defects in workmanship and materials and that the work conforms to the final shop drawings. Warranty shall apply to both patent and latent defects but shall not include damage caused by exclusions stated in manufacturer’s warranty.

PART 2 - PRODUCTS

2.1 MANUFACTURERS:

A. Acceptable manufacturers; subject to compliance with specified requirements.
1. Basis of design: YKK AP America, Inc.
2. EFCO Corp., a Pella Company.
3. Gardner Metal Systems, Inc.

4. Kawneer North America.
5. Oldcastle BuildingEnvelope™.

2.2 MATERIALS AND FINISH:

A. Structural characteristics of aluminum shall be in accord with AA "Specification for Aluminum Structures."

B. Aluminum extruded bars, rods, shapes, and tubes: Meeting ASTM B221-08; alloy, temper and wall thickness as required to meet design criteria.

C. Aluminum sheet and plate: 5005-H34 aluminum alloy meeting ASTM B209-07 minimum 0.050" thickness

D. Bars, rods and wire: Meeting ASTM B211-03.

E. Standard structural shapes: Meeting ASTM B308-02.

F. Carbon steel:
1. Structural shapes, plates and bars: Meeting ASTM A36-08.
2. Sheet and strip, cold rolled, structural quality: ASTM A1008-08a, Grades A through E.
3. Sheet and strip, hot rolled Structural quality: ASTM A1011-09, Grades A through E.
4. Sheet, hot dip galvanized, structural quality: Meeting ASTM A653-08, Grades A through F.
5. Sheet, electrolytic zinc coated: Meeting ASTM A879-06.

G. Fasteners: Exposed fasteners shall be countersunk and shall match storefronts in color.
1. Aluminum to aluminum: Aluminum or Type 304 stainless steel.
2. Aluminum to stainless steel or carbon steel: Type 304 Stainless steel.

H. Protective coatings for metals:
1. Painting for carbon steel and high strength steel:
a. Dry environment: SSPC-PS 1.09, Three-Coat Oil Base Zinc Oxide Painting System.
b. Frequently wet environment: SSPC-PS 13.01, Epoxy-Polyamide Painting System.
c. Frequently wet salt water environment: SSPC-PS 12.01, One-Coat Zinc Rich Painting System.
2. Galvanizing of carbon steel:
a. Steel sheets: Meeting ASTM A653-08.
b. Hot dip for shapes, plates, bars and strips: Meeting ASTM A123-08.
c. Electro-galvanizing: Meeting ASTM B633-07.
d. Weight of coating: Meeting ASTM A123-08, Grade 65.
3. Cold galvanizing compound: Pre-mixed, zinc dust and organic binders formulated specifically for use on steel surfaces. Compounds shall have

concentrations of zinc dust in the range of 65% to 69% or above 92% in the dried film in accord with ASTM A780-01(2006).

I. Finish on exposed aluminum components and components to which exterior sealant is applied:
   1. AAMA 611 dark bronze anodized finish.
   2. Minimum coating weight: 27 mg/sq. in., tested in accord with ASTM B137-95(2009).
   3. Minimum coating thickness: 0.70 mils, tested in accord with ASTM B244-09.
   4. Finish shall consist of manufacturer's standard mechanical and chemical finishes, followed by anodic finish.
   5. There shall be no residual stain in the coloring when tested in accord with ASTM B136-84(2008).

2.3 STOREFRONT FRAMING SYSTEM:

A. The basis of design for storefront system is YKK America YES 600. Storefront systems of similar design and construction, as manufactured by other acceptable manufacturers, may be submitted for Architect's consideration. Acceptance is subject to compliance with specified design criteria, as evidenced by submittal of specified product data, and Architect’s approval.

B. Framing characteristics:
   1. Member size: 1-3/4" by 6".
   2. System: Two-piece face and gutter, for outside glazing.
   3. Construction: Shear block or screw spline.
   4. Glazing gaskets: As specified in Glazing section.
   5. Make provisions in framing for minimum edge clearance, nominal edge cover, and nominal pocket width for thickness and type of glazing material indicated on drawings. Provisions shall be in accord with glazing material manufacturer's product data.

   6. Provide framing with reinforcing members meeting design wind loading and design criteria in accord with shop drawings. Subframes and reinforcing members of carbon steel shall have a shop applied protective coating as specified herein.

C. Sealants:
   1. Storefront sealant: Non-skinning sealant meeting AAMA Publication 800-05 with addenda; color matching storefront color.
   2. Perimeter sealant: As specified in Joint Sealants section.
   3. Sealants used inside the weatherproofing system shall have a VOC content of 250 g/L or less when calculated according to 40 CFR 59, Subpart D (EPA Method 24).

D. Weep hole filter material: 1/2" square by 6" long; 30-40 ppi, open cell, reticulated, polyvinyl chloride-coated, polyurethane foam block.

E. Framing anchors: Series 300 stainless steel for exposed fasteners and fasteners 1/4" diameter and smaller; heavy zinc-plated steel, (0.0005" thickness plating), colored chromate-coated for fasteners over 1/4" diameter. Framing anchors shall carry dead load, accommodate thermal movement and resist wind load specified herein.

F. Bituminous coating for separation of dissimilar materials: Cold-applied, asphalt mastic meeting SSPC-PS 9.01, minimum 30 mils thickness.

G. Fabricate trim pieces from sheet or plate aluminum meeting requirements specified herein.

H. Flashings and other materials used internally or externally shall be corrosion resistant, non-staining, non-bleeding and compatible with adjoining materials.

2.4 FABRICATION:

A. General: Storefront systems shall be of materials, design, sizes and thicknesses, subject to commercial tolerances, indicated on approved shop drawings and specified herein. Methods of fabrication and assembly, unless specifically stated otherwise, shall be at manufacturer's discretion.

B. Joints: Fabricate and assemble framing with joints only at intersections of members. Match exposed work to produce continuity of line and design, with joints, unless indicated otherwise, being accurately fitted and rigidly secured.

C. Protection of metals: Protect against galvanic action wherever dissimilar metals are in contact. Provide protection by painting contact surfaced with zinc chromate primer as specified herein or by application of a sealant or tape.

D. Welding:
1. Welding shall be in accord with AWS criteria and shall be done with electrodes and by methods recommended by suppliers of metals being welded. Type, size and spacing of welds shall be as indicated on approved shop drawings.
2. Perform welding behind finished surfaces so as to minimize distortion and discoloration on finished side. Remove weld spatter and welding oxides on finished surfaces by descaling and grinding.

E. Shop painting of steel: Items of steel, unless galvanized or scheduled for other finish, shall be cleaned of loose scale, dirt and foreign matter in accord with SSPC-SP 6/NACE No. 3, Commercial Blast Cleaning, and shall be coated/primed as specified herein.

F. Sealants and sealing materials: Use sealants and sealing materials in accord with material manufacturer's product data and joints shall be in accord with designs and tolerances indicated on approved shop drawings.

G. Shop glazing: Perform glazing work in accord with recommendations of GANA Glazing Manual and glazing material manufacturer's product data.

PART 3 - EXECUTION

3.1 PREPARATION:

A. Storefronts: Establish bench marks at convenient points adjacent to each elevation. Be responsible for accuracy of location of perimeter lines and elevation of bench marks.

B. Correction of errors: Should errors be found in location or elevation of perimeter lines and elevation of bench marks, installation of work shall not proceed in affected areas until errors have been corrected.

3.2 INSTALLATION:

A. Install aluminum storefront system in accord with manufacturer's product data and approved shop drawings, plumb, level and true to line, in proper alignment and relation to established lines and grades, within specified tolerances.

B. Erection tolerances: Components of storefront system shall be within the following tolerances:
1. Maximum variation from plane or location indicated on approved shop drawings: 1/8" per 12'-0" of length or 1/2" in any total length.
2. Maximum offset from true alignment between two members abutting end to end in line: 1/16".
3. Maximum offset between framing members at corners of glazing pocket: 1/32".

C. Installation within masonry openings: No parts other than built-in anchor devices shall be installed until masonry work is completed and cleaned.

D. Protect aluminum in contact with masonry, steel, concrete or other dissimilar material from contact by neoprene gaskets or bituminous coating.

E. Before anchoring to structure, shim and brace work plumb, level and in designated location. Anchorage of storefront framing to building structure shall be in accord with approved shop drawings. After wall is positioned, connections indicated on approved shop drawings shall be rigidly fixed.

F. Welding: Protect glass and finished surfaces from damage from weld spatter. Welds and adjacent metal shall be cleaned and primed with primer specified herein.

G. Provide sill flashing at exterior storefronts. Flashing shall extend continuous, with joints lapped and set in storefront sealant. Provide end dams minimum 2" high.

H. Install weep hole baffle with filter at weep holes. Install filter under 30% compression.

I. During installation, verify that storefront system allows water which enters the system to be collected in gutters and weeped to exterior. Ascertain that weep holes are open and that metal-to-metal joints are sealed.

J. Locate expansion mullions in accord with manufacturer's recommendations as indicated on approved shop drawings.

K. Caulking:
   1. Caulk metal-to-metal internal storefront joints using storefront sealant. Install in accord with Joint Sealants section.
   2. Caulk perimeter of storefronts using silicone sealant as specified in Joint Sealants section. Caulk both exterior and interior faces of storefront perimeter.
   3. Caulk fasteners heads penetrating storefront jamb, sill and head members.

L. Clean exposed aluminum surfaces at completion of work, just prior to Date of Substantial Completion. Repair or replace work damaged or stained by subsequent work.

M. Field tests: Conduct to ascertain that storefront system is watertight. Conduct generally in accord with AAMA 501.2. A minimum of two tests shall be performed. Tests shall be performed in the presence of Architect.

END OF SECTION

SECTION 08441

GLAZED ALUMINUM CURTAIN WALLS

PART 1 - GENERAL

1.1 SUMMARY:

A. Related work specified elsewhere:
1. Concrete.
2. Structural steel.
3. Thermal insulation.
4. Firestopping.
5. Joint sealants.
6. Aluminum-framed entrances and storefronts.
7. Door hardware.
8. Glazing.

1.2 DESIGN REQUIREMENTS:

A. Thermal movement: Completed curtain wall system shall be capable of withstanding expansion and contraction of components caused by an ambient air temperature range of 180°F. without buckling, undue stress on glass, edge seal failure, excess stress on structural elements, damaging loads on anchors and fasteners reduction in performance or other detrimental defects. Operating doors shall function normally over this temperature range.

B. Static pressure air infiltration:
1. Air leakage rate through fixed light areas of curtain wall system shall not exceed 0.3 cfm per square foot when tested in accord with ASTM E283-04(2012) at a differential static pressure of 6.24 psf.
2. Air leakage rate through entrance doors shall not exceed 1.0 cfm per square foot when tested in accord with ASTM E283-04(2012) at a differential static pressure of 1.57 psf.

C. Water penetration (static pressure): No uncontrolled water other than condensation on the indoor face of any curtain wall component when tested in accord with ASTM E331-00(2009), with differential static pressure equal to 20% of the inward acting design wind load pressure but not less than 15 psf.

D. Water penetration (dynamic pressure): No uncontrolled water other than condensation shall occur on the indoor face of any curtain wall member when tested in accord with AAMA 501.1-05.

E. Structural performance:
1. Complete curtain wall system shall withstand positive and negative wind pressure loading complying with requirements of the International

Building Code, 2009 Edition; loads acting perpendicular to wall plane. Test per ASTM E330-02(2010), Procedure A.

2. Deflection limitations and testing requirements:
   a. Maximum allowable deflection of curtain wall framing: Deflection of framing members in a direction normal to wall plane when subjected to specified design loads shall not exceed L/175 of clear span, except that when drywall subjected to bending is affected, the deflection shall not exceed 1/360 of span.
   b. Deflection of a framing member overhanging an anchor point such as roof, parapets, and other components shall be limited to 2L/175 where L is length of cantilevered member.
   c. Deflection of a framing member overhanging an anchor point and adjoining a fixed building element shall be limited to no more than 1/2 sealant joint depth between framing member and fixed building element.
   d. Take deflection measurements from gages located on framing members so as to measure maximum deflections.
   e. Methods used to calculate deflection shall be those recommended by AA.
   f. No glass breakage.
3. Dead load: Deflection of any member in a direction parallel to plane of wall, when carrying its full dead load, shall not exceed an amount which will reduce glass bite below 75% of design dimension and member shall have 1/8" minimum clearance between itself and top of glass, or other fixed part directly below. Clearance between member and an operable window or door shall be 1/16" minimum.
4. Uniform structural loads and testing requirements:

   Conduct uniform load structural tests in accord with ASTM E330-02(2010). Subject curtain wall system to inward and outward acting uniform loads equal to 1.5 times inward and outward acting design wind pressure. Satisfactory performance at these loads shall mean no glass breakage, damage to fasteners or anchors, hardware parts or actuating mechanisms; no malfunctioning of windows, doors and operating hardware; no permanent deformation of main framing members in excess of 0.2% of clear span.

F. Vertical adjustments: Curtain wall system shall allow for vertical adjustment to compensate for irregularities in adjacent surfaces. Adjustment may include shim

space at head and sill or interlocking head or sill section. Design shall allow for vertical adjustment without altering glass size and shall not require glass bite reduction below minimum recommended by glass manufacturer. Vertical adjustment provisions shall take into consideration the allowable fabrication and erection tolerances and deflections in adjacent surfaces, and tolerance required by curtain wall construction.

G. Drift (Wind or Seismic): Curtain wall system and its anchorage shall accommodate resulting lateral drift when subjected to maximum overturning moment of building due to specified wind load or seismic load.

H. Seismic loads: Curtain wall system and its anchorage shall resist seismic loads in accord with code requirements.

I. Thermal performance when tested in accord with AAMA 1503.1 and NFRC 100.
   1. Condensation resistance factor (CRF): A minimum of 70.
   2. Thermal transmittance U-value: 0.44 BTUH/ft^2 /degree F. or less.

J. Water penetrating curtain wall system shall be contained within the system by gutters and drained to exterior by weep holes. No uncontrolled water infiltration is allowable.

K. Glazing: Design system for exterior glazing of vision areas.

L. Fasteners: Compatible with material being fastened. Use concealed fasteners in finished work.

M. Preset anchors: Capable of transmitting design loads and thermal expansion loads assigned to a single anchor with a safety factor of 2.5.

1.3 SUBMITTALS:

A. Shop drawings:
   1. Show curtain wall in elevation with sections and details at full scale. Include glass and metal thicknesses, joining details, field connections, anchorage, provisions for expansion, fastening and sealing methods, splice details, metal finishes, hardware for entrances and glazing accessories.
   2. Indicate relationships with adjacent and interfacing work.

B. Glass manufacturer's approval: Indicate on shop drawings or by letter, prior to submission of shop drawings, that selected glass manufacturers have reviewed and approved details including glass bite, support, clearances, system weepage, air circulation around interior window treatments, shading by exterior building components and glazing methods.

C. Samples:
   1. Visual samples: Submit aluminum finish samples, minimum 6" by 6", of each color and finish specified. Indicate full range of selected color to be

expected in curtain wall work. Samples shall be within color range of samples available for inspection in Architect's office.

2. Sealant adhesion test samples: Provide samples of specified metal finish for adhesion tests by sealant manufacturer; as specified in Joint Sealants section.

D. Structural design calculations: Submit for Architect's information only. Indicate compliance with specified design criteria. Indicate aluminum alloy and temper and deflection at design wind loads and supplementary loading specified. Design calculations shall bear seal of a professional engineer licensed in the State of Georgia. Indicate that engineer has reviewed shop drawings.

E. Test reports: Submit for Architect's information only:
1. Submit reports by an independent testing laboratory indicating that curtain wall system proposed for use has been tested for compliance with specified design criteria.
2. Tests shall have been made for essentially similar systems having similar glass sizes, mullion lengths, reinforcement and methods of attachment.
3. Tests shall indicate satisfactory testing to at least structural and performance criteria specified.
4. If test data is not available for proposed systems or if data does not represent project conditions, Contractor shall be responsible for securing satisfactory tests by an independent testing agency acceptable to Architect. All costs for such testing shall be borne by Contractor.

F. Welder certification: Submit welders' qualifications in accord with AWS D1.1 and AWS D1.2, current within previous 12 months, for Architect's information only.

G. Maintenance data: Submit as part of Contract closeout documents. Give instructions for general maintenance and repair of surfaces and finishes. Include detailed re-glazing procedures.

H. Record drawings: Submit as part of Contract closeout documents. Indicate changes made during construction.

1.4 QUALITY ASSURANCE:

A. Applicable standards; standards of the following as referenced herein:
1. Aluminum Association (AA).
2. American Architectural Manufacturers Association (AAMA).
3. American Iron and Steel Institute (AISI).
4. American Welding Society (AWS).
5. ASTM International (ASTM).
6. Sheet Metal and Air Conditioning Contractors National Association, Inc. (SMACNA).
7. Society for Protective Coatings (SSPC).

B. Fabricator/installer qualifications: If requested by Architect, proposed curtain wall fabricator/installer shall submit evidence of satisfactory completion of similar work and of adequate financial responsibility. Architect reserves the right to inspect fabrication facilities in determining qualifications.

C. Qualifications of welders:
1. Welders employed on the Work shall have passed qualification tests within the past 12 months in the position for which employed, using test procedures covered in AWS D1.1 and AWS D1.2.
2. Contractor shall require a welder to re-take the qualification test when, in Architect's opinion, welder's work creates a reasonable doubt as to the welder's proficiency. Conduct re-tests at no additional expense to Owner. Make re-certification to Architect after welder has passed the test.

D. Pre-installation conference: Prior to beginning curtain wall erection, a pre-installation conference shall be held to review work to be accomplished.
1. Contractor, Architect, curtain wall fabrication, erection and glazing subcontractor and other trades with work related to curtain wall installation shall be present.
2. Contractor shall notify applicable parties at least three days prior to time of the meeting.
3. Contractor shall record minutes of meeting and distribute to parties in attendance.

1.5 PROJECT/SITE CONDITIONS:

A. Protection: Protect aluminum surfaces from contact with lime, mortar, cement, acids and other harmful substances as well as from careless handling, storage or machining.

1.6 WARRANTIES:

A. Endorse and forward to Owner a five year written warranty covering work performed under this section. Warranty shall cover defective materials, including glazing and caulking materials specified in other sections, workmanship and performance, and shall provide for prompt replacement of damaged materials or repair of leaks at no additional cost to Owner. Warranty shall commence at Date of Substantial Completion.

PART 2 - PRODUCTS

2.1 ALUMINUM CURTAIN WALLS:

A. Acceptable manufacturers; subject to compliance with specified requirements:
1. Basis of design: YKK AP America, Inc.
2. EFCO Corp., a Pella Company.
3. Gardner Metal Systems, Inc.

4. Kawneer North America.
5. Oldcastle BuildingEnvelope™.

B. The basis of design for curtain wall system is YKK YCW 750 OG. Curtain wall systems of similar design and construction, as manufactured by other acceptable manufacturers, may be submitted for Architect's consideration. Acceptance is subject to compliance with specified design criteria, as evidenced by submittal of laboratory test reports.

C. Design: Curtain wall design shall incorporate the following:
1. Framing members exposed to building interior shall be tubular sections or shall incorporate cover trim without joints in individual members.
2. Provide system with internal splices at joints.
3. Size: 2-1/2" by 6-3/4".

2.2 MATERIALS AND FINISHES:

A. Aluminum components:
1. Extrusions: Meeting ASTM B221-12a; alloy, temper and wall thickness as required to meet design criteria. Structural characteristics of aluminum shall be in accord with AA, "Specification for Aluminum Structures."
2. Sheet: 5005-H34 alloy meeting ASTM B209-10; minimum 0.080" thickness.
3. Castings: 356-T6 alloy meeting ASTM B108-12.

B. Carbon steel:
1. Carbon steel alloys shall conform to requirements published in American Iron and Steel Products Manual and to ASTM A36-08.
2. High strength, low alloy steel shall conform to requirements published in American Iron and Steel Products Manual and to ASTM A36-08, ASTM A1008-12a and ASTM A618-04(2010).

C. Finish on exposed aluminum components and components to which exterior sealant is applied:
1. AAMA 611 dark bronze anodized finish.
2. Minimum coating weight: 27 mg/sq. in., tested in accord with ASTM B137-95(2009).
3. Minimum coating thickness: 0.70 mils, tested in accord with ASTM B244-09.
4. Finish shall consist of manufacturer's standard mechanical and chemical finishes, followed by anodic finish.
5. There shall be no residual stain in the coloring when tested in accord with ASTM B136-84(2008).

2.3 ENTRANCE DOORS:

A. The basis of design for entrance doors is storefront system is YKK America 35D Heavy Duty Swing Door. Entrance doors of similar design and construction, as manufactured by other acceptable manufacturers, may be submitted for

Architect's consideration. Acceptance is subject to compliance with specified design criteria, as evidenced by submittal of specified product data, and Architect's approval.

B. Medium stile design: Minimum 3-1/2" wide stiles and top rail and 10" wide bottom rail.

C. Door construction: Fabricated of extruded aluminum sections with door corners joined by concealed reinforcement, secured with bolts and screws and by Sigma deep penetration welding.

D. Glazing:
   1. Snap-in stops with neoprene glazing gaskets.
   2. Glass and glazing accessories shall be as specified in Glazing section.

E. Drip cap: Provide doors with drip cap at head and bottom rail to prevent water infiltration.

F. Adjustment: Doors equipped with adjusting mechanism located in top rail near lock stile, providing for minor clearance adjustments after installation.

G. Weatherstripping: Pile type in replaceable rabbets for stiles and rails; complying with AAMA 701.2/702.

H. Hardware: Provide as specified in Door Hardware section.

2.4 ACCESSORY PRODUCTS:

A. Glazing, including vision glass and accessories: As specified in Glazing section.

B. Glazing gaskets and sealants:
   1. Glazing gaskets: Comply with Glazing section.
   Glazing sealants: Comply with Glazing section.

C. Perimeter sealant: As specified in Joint Sealants section.

D. Curtain wall sealant: Non-skinning type meeting AAMA 800-05; color matching curtain wall.

E. Weep hole filter material: 1/2" square by 6" long, 30-40 ppi open cell, reticulated, polyvinyl chloride coated, polyurethane foam block.

F. Curtain wall anchors: AISI Type 302/304 stainless steel; shapes and sizes indicated on approved shop drawings.

G. Alignment pins: Stainless steel; color matching curtain wall finish.

H. Structural fasteners: Series 300 stainless steel for exposed fasteners and fasteners 1/4" diameter and smaller, heavy cadmium-plated steel (0.0005" thickness plating), colored chromate coated for fasteners over 1/4" diameter.

I. Insulating washers: Fiberglass-reinforced nylon.

J. Shop primer for steel anchors and connection hardware: Organic, zinc-rich primer meeting SSPC-Paint 20, Type II.

K. Bituminous coating: Cold-applied, asphalt mastic meeting SSPC-PS 9.01, minimum 30 mil thickness.

L. Interior components: Provide interior trim components and closures between curtain wall and interior columns for finished installation. Attach trim components without use of exposed fasteners.

M. Membrane subflashing: Minimum 1/16" thickness, uncured neoprene sheet.

2.4 FABRICATION:

A. Fabricate curtain wall components in accord with approved shop drawings. Shop fabricate to greatest extent practicable to minimize field cutting, splicing and fastening. Remove burrs from cut edges and ease edges and corners to approximately 1/64" radius.

B. Fabricate system with welded, bolted or screwed connections as indicated on approved shop drawings. Welding shall be in accord with AWS standards, performed by qualified welders. Do not distort members or deface exposed finish. Grind welds smooth.

C. Steel components:
   1. Surface preparation: Clean surfaces after fabrication and immediately prior to shop painting in accord with SSPC-SP 2, Hand Tool Cleaning, or SSPC-SP 3, Power Tool Cleaning, at manufacturer's option.

   2. Shop priming:
      a. Shop prime steel components except surfaces to be field welded.
      b. Shop prime surfaces after completion of fabrication.
      c. Apply specified shop primer in accord with manufacturer's product data and SSPC Painting Systems Specifications to provide a minimum dry film thickness of 2.5 mils. Apply shop primer within four hours after cleaning and before rust-bloom occurs. Paint only in relative humidity below 85% and surface temperatures of five ℉. above dew point.

D. Reinforcement: Reinforce aluminum work at anchorage and support points, at joints and attachment points for interfacing work. Provide non-corrosive anchors for fasteners where aluminum is less than 0.125" thickness.

E. Fabrication of aluminum panels, cladding and trim:

1. Fabricate of minimum 0.125" thickness material, except as otherwise required to eliminate oil-canning or telegraphing of fabrication and welding processes.
2. Fabricate components to sizes indicated on approved shop drawings without distortion in finished surfaces.
3. Form returns with sharp arrises; curved components with smooth radii.
4. Form aluminum panels with returns on all four edges.
5. Form copings in nominal 10'-0" sections with factory fabricated corners and transition units formed with shop welded mitered corners and sealed, riveted joints with joints mitered and welded prior to application of finish coating.
6. Attach components with concealed fasteners and without exposed sealant joints unless otherwise indicated on shop drawings.
7. Make riveted joints using solid shank rivets or pop rivets as applicable. Pop rivets shall be closed end type.

F. Drill and cut doors and frames to template for finish hardware. Reinforce frames and door stiles and rails to receive finish hardware in accord with door manufacturer's product data.

PART 3 - EXECUTION

3.1 PREPARATION:

A. Inserts and anchorage:
1. Furnish inserts and anchoring devices which must be preset in concrete on timely basis to avoid delay in the work. Set at locations indicated on approved shop drawings.
2. Coordinate setting drawings, diagrams, templates and instructions for installation of concrete inserts, anchor bolts and miscellaneous items having integral anchors cast in concrete construction.

B. Shop assembly: Preassemble items in shop to greatest extent possible to minimize field splicing and assembly at project site. Disassemble units only to extent necessary for shipping and handling limitations. Mark units for reassembly and installation.

3.3 INSTALLATION:

A. Anchors: Verify location and alignment of preset anchors. Report deviations and proposed method for correction to Architect prior to proceeding.

B. Fastening to in-place construction: Provide anchorage devices and fasteners for securing items to in-place construction, including clip angles and threaded fasteners, anchor bolts and erection bolts of types and sizes indicated on approved shop drawings.

C. Cutting, fitting and placement: Perform cutting, drilling and fitting for installation of work. Set work in location, alignment and elevation, plumb and level within specified tolerances, true and free of rack; measured from established lines and levels. Install work in accord with approved shop drawings.

D. Protection: Protect aluminum from contact with dissimilar materials by separating with neoprene gaskets or bituminous coating.

E. Alignment: Before securing curtain wall components in final position to structure, shim and brace work plumb and level and in designated location.

F. Expansion control: Locate expansion members as indicated on approved shop drawings. Use alignment pins to maintain position. Make joints only at intersections of framing members.

G. Sill flashing: Install continuous aluminum sill flashing matching finish of curtain wall at conditions where curtain wall rests on floor slab or sill wall. Extend sill flashing continuous, with joints lapped and set in curtain wall sealant, and inside edge turned up to form watertight gutter. Seal penetrations.

H. Entrances: Install entrance doors in frames using specified hardware. Adjust for uniform contact and smooth operation throughout full swing without binding or sticking.

I. Field connections: Provide welded or bolted connections as indicated on approved shop drawings. Join dissimilar metal by bolting with galvanic separators. Welding shall be performed by qualified welders.

J. Welded connections: Conduct in accord with AWS standards for type of metal being welded. Clean surfaces to be welded as specified in shop cleaning. Weld no finished, exposed members. Perform no welding at locations where discoloration or other damage would result on exposed surfaces.

K. Bolted connections: Provide slotted holes to allow for alignment of members.

L. Weep holes: Install weep hole baffle with filter at weep holes. Install filter under 30% compression. Verify during installation that curtain wall system allows water which enters the system to be collected in gutters and weeped to exterior. Ascertain that weep holes are open and that metal-to-metal joints are sealed.

M. Caulking:
1. Caulk metal-to-metal internal curtain wall joints using curtain wall sealant. Install in accord with Joint Sealants section.
2. Caulk perimeter of curtain wall using sealant as specified in Joint Sealants section. Caulk both exterior and interior faces of curtain wall perimeter.

N. Field painting: After curtain wall erection, clean exposed surfaces of field connections, unpainted areas adjacent to field connections and damaged areas

in shop primer on steel components. Clean to same standards as required for shop primer and paint using identical primer.

O. Site tolerances:
   1. Maximum variation from plumb, level or designated position: 1/8" in 10'-0" vertical or 1/8" in 20'-0" horizontal; not exceeding 1/4" in 40'-0" any direction.
   2. Maximum offset in alignment between two consecutive members in line, end to end: 1/16".
   3. Maximum offset between framing members at corners of glazing pocket: 1/32".

3.4 CLEANING:

A. Cleaning: Maintain curtain wall assembly in clean condition during construction period. Immediately remove stains or materials having adverse effect on curtain wall materials and finishes. Remove excess glazing and sealant compounds.

B. Final cleaning: Just prior to Date of Substantial Completion, clean entire curtain wall assembly, including interior and exterior metal. Clean using pre-tested detergent and water. Flush with clean water. Repair or replace work which cannot be cleaned or which has been damaged during construction operations.

3.5 FIELD QUALITY CONTROL:

A. Field tests: Conduct to ascertain that curtain wall system is watertight.
   1. Conduct in accord with AAMA 501.2, at locations selected by Architect.
   2. Conduct in accord with ASTM E1105, at locations selected by Architect.
   3. Perform a minimum of two tests for each specified test procedure.
   4. Perform tests in Architect’s presence.

END OF SECTION

SECTION 08450

TRANSLUCENT WALL ASSEMBLIES

PART 1 - GENERAL

1.1 SUMMARY:

A. Work of this section includes translucent panel system consisting of 2-3/4" thick double-faced sandwich panels, including the following:
   1. Insulated translucent panels.
   2. Structural support system.
   3. Aluminum flashing.

B. Related work described in other sections includes:
   1. Glazing.
   2. Joist sealants.

1.2 SUBMITTALS:

A. Shop drawings: Submit detailed shop drawings for construction and installation. Indicate material types, gauges and finishes, fabrication details and installation details. Show methods of attachment and expansion provisions.

B. Product data: Indicate materials, finishes and installation procedures recommended by manufacturer. Indicate compliance with specified design criteria. Include specific glazing details.

C. Samples:
   1. Panels: Submit 1'-0" by 2'-0" section indicating thickness and construction of panel, texture and color of fiberglass face sheet and aluminum grid component.
   2. Frame and batten: Submit 6" length section of aluminum head and sill clamp channel framing and batten members, indicating selected color and finish to be expected in translucent panel work.

D. Structural design calculations: Indicate compliance with specified structural design criteria. Design calculations shall bear seal of a professional engineer licensed in the State of Georgia. Indicate that engineer has reviewed shop drawings.

E. Test reports: Submit certified test reports made by an independent testing organization for each type and class of panel system. Reports shall verify that material will meet specified performance requirements. Previously completed test reports will be acceptable if current and indicative of products used on this project. Test reports required are:
   1. Flame spread and smoke development: ASTM E84-12c.
   2. Burn extent: ASTM D635-10.
   3. Color difference: ASTM D2244-11.
   4. Impact strength: SPI Method.

5. Bond strength: ASTM C297-04(2010) and ASTM D1002-10.
6. Accelerated aging: ASTM D1037-12.
7. Beam bending strength: ASTM E72-10.
8. Insulation: "U" factor ASTM C1363-11.
9. Class A roof covering; burning brand: ASTM E108-11, Class A test.

1.3 DESIGN CRITERIA:

A. Thermal movement: Completed system shall be capable of withstanding expansion and contraction of components caused by an ambient air temperature range of 160°F. without buckling, stress on facing, edge seal failure, excess stress on grid framing components, anchors and fasteners or reduction in performance, including bond failure of panel adhesive.

B. Structural performance: Complete translucent panel system shall withstand positive and negative wind pressure loading complying with International Building Code, 2009 Edition; loads acting perpendicular to wall framing plane. Test per ASTM E330-02(2010), Procedure A.
1. Maximum allowable deflection of panel framing: L/175 or 3/4", whichever is less.
2. Supplementary loading (design pressure with a safety factor of 1.5 applied):
   a. Maximum allowable deformation in a wall framing member: 0.20%.
   b. No permanent damage to anchors and fasteners.

C. Water penetrating system and condensation shall be contained within the system by gutters and drained to exterior by weep holes. No uncontrolled water infiltration is allowable.

D. Fasteners: Compatible with material being fastened. Conceal interior and exterior fasteners in finished work, insofar as practicable. Exposed fasteners shall be countersunk and finished to match adjacent materials.

E. Anchors: Capable of transmitting design loads and thermal expansion loads assigned to a single anchor; with a safety factor of 2.5.

1.4 QUALITY ASSURANCE:

A. Applicable standards; standards of the following, as referenced herein:
1. Aluminum Association (AA).
2. American Architectural Manufacturers Association (AAMA).
3. ASTM International (ASTM).
4. American Welding Society (AWS).
5. Society for Protective Coatings (SSPC).

1.5 JOB CONDITIONS:

A. Protection: Protect aluminum surfaces from contact with lime, mortar, cement, acids and other harmful surfaces as well as from careless handling, storage or machining.

B. Allowable erection tolerances:
   1. Maximum variation from designated position: 1/8" in 10'-0", not exceeding 1/4" in any 40'-0" direction.
   2. Maximum offset in alignment between two consecutive members in line, end to end: 1/16".

1.6 WARRANTIES:

A. Endorse and forward to Owner a five-year written manufacturer's warranty covering translucent panel system work. Warranty shall cover defective materials, workmanship and performance and shall provide for the prompt repair of leaks at no additional cost to Owner. Warranty shall be limited to repair or replacement of work described in this section and shall not provide for repair or replacement of work by others. Warranty shall commence on Date of Substantial Completion.

B. Finish warranty: Warrant finish coating to remain free of checking, crazing, peeling, chalking or fading for a period of five years, beginning at Date of Substantial Completion.

PART 2 - PRODUCTS

2.1 MANUFACTURERS:

A. Acceptable manufacturers; subject to compliance with specified requirements:
   1. Kalwall.
   2. Major Industries, Inc.

2.2 ALUMINUM COMPONENTS:

A. Extrusions: Meeting ASTM B221-12a, alloy, temper and wall thickness as required to meet design criteria. Structural characteristics of aluminum shall be in accord with AA, "Specification for Aluminum Structures."

B. Sheet: 5005-H34 alloy meeting ASTM B209-10; minimum 0.050" thickness.

C. Plate: 5005-H34 alloy meeting ASTM B209-10; minimum 0.125" thickness.

2.3 TRANSLUCENT FACING:

A. Translucent faces: Manufactured specially for architectural use.

B. Flammability: Interior face sheet shall have a flame spread rating no greater than 25 and smoke development no greater than 300 when tested in accordance with ASTM E84-12c. Burn extent by ASTM D635-10 shall be no greater than 1".

C. Weatherability:
   1. Exterior faces shall not change color more than 4.0 units when tested in accord with ASTM D2244-11 (Delta E) after five years outdoor weathering in South Florida at 45 degrees facing South determined by the average of at least three white samples.
   2. Exterior white face sheet shall not darken more than 0.20 units when tested in accord with ASTM D2244-11 when exposed to 150°F. for two weeks.
   3. Exterior faces shall have a high performance thermoset acrylic protective surface, minimum 1.2 mils thickness, factory applied.

D. Appearance:
   1. Face sheets shall be uniform in color to prevent splotchy appearance.
   2. Exterior face sheets shall be 0.070" thickness and white color. Interior face sheets shall be 0.045" thickness and white color. Faces shall not vary more than ±10% in thickness.
   3. Faces shall be free of ridges and wrinkles which prevent surface contact in bonding to aluminum grid core. Clusters of air bubbles/pinholes which collect moisture and dirt will not be acceptable.

E. Strength: Exterior face sheet shall be uniform in strength and repel an impact equal to 60 lbs. without fracture or tear in accord with SPI Shatter Resistance Test.

2.4 NON-COMBUSTIBLE GRID CORE:

A. Aluminum I-beams: 6063-T6 with provisions for mechanical interlocking of muntin-mullion and perimeter to prevent high and low intersections which do not allow full bonding surface to contact with face material. Width of I-beam shall be no less than 7/16". I-beam grid shall be machined to tolerances of not greater than ±0.002" for flat panels.

2.5 ADHESIVE:

A. Laminate adhesive: Heat and pressure resin-type for structural sandwich panel use. Adhesive shall pass testing requirements specified by the International Conference of Building Officials, "Acceptance Criteria for Sandwich Panel Adhesive." Minimum strength shall be:
   1. 750 psi tensile strength by ASTM C297-04(2010) after two exposures to six cycles each of the aging conditions prescribed by ASTM D1037-12.
   2. 500 psi shear strength average of five exposures by ASTM D1002-10:
      a. 50% relative humidity at 73°F.
      b. Accelerated aging by ASTM D1183-03(2011), Procedure C.
      c. 182°F.
      d. Full cycle soak.
      e. 500 hour oxygen bomb.

2.6 PANEL CONSTRUCTION:

A. Panels shall have a thickness of 2-3/4" with a "U" factor of 0.19, light transmission of 10% and shading co-efficient of 0.09.

B. Panels shall be a sandwich panel of flat fiberglass sheet bonded to a grid core of mechanically interlocking aluminum I-beams and shall be laminated under a controlled process of heat and pressure. Tape bond systems are not allowed.

C. Translucent sandwich panel deflection shall not exceed 3-1/2" at 35 lbs. per sq. ft. loading and shall not exceed 0.10" set deflection five minutes after load release per ASTM E72-10 with a 12'-0" clearspan, tested flat.

D. Grid pattern: Nominal 1'-0" by 2'-0".

E. Adhesive bonding line shall be straight, cover the entire width of I-beam and have a neat, sharp edge. In order to ensure bonding strength, white spots at intersections of muntins and mullions shall not exceed 4 for each 40 square feet of panel, nor shall they be more than 3/64" in width.

F. Panels and aluminum perimeter frame shall be preassembled where practical and sealed at the factory.

2.7 BATTENS AND PERIMETER CLOSURE SYSTEMS:

A. Closure system: Extruded aluminum alloy, screw clamp-tite closure system.

B. Closure fasteners: 300 series stainless steel screws, factory sealed to the panels. Aluminum battens and cap plates shall be field installed.

C. Finish: Manufacturer's standard corrosion-resistant finish. Color shall be as selected by Architect from manufacturer's standards.

D. Fasteners and anchors:
1. Exposed: Stainless steel with gasket washer.
2. Concealed: Stainless steel or cadmium-plated steel.

E. Bituminous coating: Cold-applied, asphalt mastic meeting SSPC-PS 9.01, minimum 30 mil thickness.

F. Neoprene pads: Neoprene, 60-70 durometer hardness, meeting ASTM D1056-07, Type 2.

G. Sealants:
1. Storefront sealant: Non-skinning sealant meeting AAMA Publication 800-05 with addenda; color matching assembly color.
2. Perimeter sealant: As specified in Joint Sealants section.

2.8 FLEXIBLE SEALING TAPE:

A. Sealing tape: Manufacturer's standard, pre-applied to closure system at factory under controlled conditions.

2.9 FABRICATION:

A. Fabrication: Factory fabricate translucent panel system. Work which cannot be factory fabricated shall be factory assembled, checked for fit, marked and disassembled to extent required for shipping.
   1. Fabricate components to sizes indicated on approved shop drawings without distortion in finished surfaces.
   2. Form returns with sharp arrises.
   3. Attach components with concealed fasteners and without exposed sealant joints unless otherwise indicated on the drawings.
   4. Make riveted joints in sheet metal work using solid shank rivets or pop rivets as applicable. Pop rivets shall be closed end type.

B. Welding: Heliarc process in accord with AWS Standards, with welds ground smooth prior to finishing.

PART 3 - EXECUTION

3.1 PREPARATION:

A. Inserts and anchorage: Furnish inserts and anchoring devices which must be preset in concrete on timely basis to avoid delay in the work. Set at locations indicated on approved shop drawings.

B. Coordinate setting drawings, diagrams, templates and instructions for installation of concrete inserts, anchor bolts and miscellaneous items having integral anchors cast-in-concrete construction.

3.2 INSTALLATION:

A. Verify location and alignment of preset anchors. Report deviations and proposed method for correction to Architect prior to proceeding.

B. Fastening to in-place construction: Provide anchorage devices and fasteners for securing panels to in-place construction, ** including threaded fasteners for concrete inserts. ** Anchor bolts and erection bolts of types and sizes indicated on approved shop drawings.

C. Cutting, fitting and placement: Perform cutting, drilling and fitting for installation of work. Set work in location, alignment and elevation, plumb and level, true and free of rack; measured from established lines and levels. Install work in accord with approved shop drawings.

D. Protect aluminum from contact with dissimilar materials by separating with neoprene pads or bituminous coating.

E. Before securing panel system components in final position to structure, shim and brace work plumb and level and in designated location.

F. Field connections: Provide welded or bolted connections as indicated on approved shop drawings. Join dissimilar metal by bolting, with galvanic separators. Welding shall be performed by qualified welders.

G. Welded connections: Conduct in accord with AWS standards for type of metal being welded. Clean surfaces to be welded as specified in shop cleaning. Do not weld finished, exposed members. Do not perform welding at locations where discoloration or other damage would result on exposed surfaces.

H. Bolted connections: Provide slotted holes to allow for alignment of members.

I. Caulk metal-to-metal internal panel system joints using non-skinning type sealant. Install in accord with Joint Sealants section.

J. Caulk perimeter of wall system using exterior sealant as specified in Joint Sealants section.

K. Flashings:
   1. Install using continuous cleat anchorage.
   2. Provide 6" wide backup plate at joints, formed to profile of flashing. Set flashing over backup plate in double beads of non- skinning sealant.
   3. Form joints in flashings to allow for 1/2" minimum expansion at 20'-0" o. c., maximum, and 8'-0" from corners.

L. Final cleaning: Just prior to Date of Substantial Completion, clean entire translucent panel system assemblies, interior and exterior metal and fiberglass panel materials. Clean using pre-tested detergent and water. Flush with clean water. Repair or replace work which cannot be cleaned or which has been damaged during construction operations.

M. Field tests: Conduct field testing of completed wall system assemblies to determine watertightness. Generally conduct testing in accord with AAMA 501.2-03. A minimum of one test per wall shall be performed. Correct deficiencies found in wall systems to make assembly watertight. Conduct testing in presence of Architect.

END OF SECTION

SECTION 08 7100

DOOR HARDWARE

PART 1 - GENERAL

1.1 RELATED DOCUMENTS:

A. Drawings and general provisions of Contract, including General and Supplementary Conditions and Division 1 Specification Sections, apply to this Section.

1.2 SUMMARY:

A. This Section includes items known commercially as finish or door hardware that are required for swing, sliding, and folding doors, except special types of unique hardware specified in the same sections as the doors and door frames on which they are installed.

B. The hardware in this spec will need to be coordinated with the County's security system provider, which is currently Johnson Controls. There will need to be coordination with the GC and with FCDoIT. The security system will be spec'd, provided, and installed by Johnson Controls or FCDoIT's selected vendor.

C. This Section includes the following:
1. Hinges
2. Continuous hinges
3. Key control system
4. Lock cylinders and keys
5. Lock and latch sets
6. Bolts
7. Exit devices
8. Push/Pull units
9. Closers
10. Overhead holders
11. Miscellaneous door control devices
12. Door trim units
13. Protection plates
14. Weatherstripping for exterior doors
15. Sound stripping for interior doors
16. Thresholds

D. Related Sections: The following Sections contain requirements that relate to this Section:
1. Section 08 1100: Hollow Metal Doors and Frames
2. Section 08 1400: Wood Doors

E. Products furnished but not installed under this Section to include:
   1. Cylinders for locks on entrance doors.
   2. Final replacement cores and keys to be installed by Owner.

1.3 REFERENCES:

A. Standards of the following as referenced:
   1. American National Standards Institute (ANSI)
   2. Door and Hardware Institute (DHI)
   3. Factory Mutual (FM)
   4. National Fire Protection Association (NFPA)
   5. Underwriters' Laboratories, Inc. (UL)
      a. UL 10C - Fire Tests Door Assemblies
   6. Warnock Hersey

B. Regulatory standards of the following as referenced:
   1. Department of Justice, Office of the Attorney General, *Americans with Disabilities Act*, Public Law 101-336 (ADA).
   2. CABO/ANSI A117.1: *Providing Accessibility and Usability for Physically Handicap People*, 1992 edition.

1.4 SYSTEM DESCRIPTION:

A. Refer to applicable “Headings“ for system description for electric and electro-pneumatic hardware products.

1.5 SUBMITTALS:

A. Product data including manufacturers' technical product data for each item of door hardware, installation instructions, maintenance of operating parts and finish, and other information necessary to show compliance with requirements. For items other than those scheduled in the “Headings” of Section 3, provide catalog information for the specified items and for those submitted.

B. Final hardware schedule coordinated with doors, frames, and related work to ensure proper size, thickness, hand, function, and finish of door hardware.
   1. Final Hardware Schedule Content: Based on hardware indicated, organize schedule into vertical format “hardware sets" indicating complete designations of every item required for each door or opening. Use specification Heading numbers with any variations suffixed a, b, etc. Include the following information:
      a. Type, style, function, size, and finish of each hardware item.
      b. Name and manufacturer of each item.
      c. Fastenings and other pertinent information.
      d. Location of each hardware set cross-referenced to indications on Drawings both on floor plans and in door and frame schedule.

e. Explanation of all abbreviations, symbols, and codes contained in schedule.
f. Mounting locations for hardware.
g. Door and frame sizes and materials.
h. Keying information.
i. Cross-reference numbers used within schedule deviating from those specified.
1) Column 1: State specified item and manufacturer.
2) Column 2: State prior approved substituted item and its manufacturer.

2. Submittal Sequence: Submit final schedule at earliest possible date particularly where acceptance of hardware schedule must precede fabrication of other work that is critical in the Project construction schedule. Include with schedule the product data, samples, shop drawings of other work affected by door hardware, and other information essential to the coordinated review of schedule.
3. Keying Schedule: Submit separate detailed schedule indicating clearly how the Owner's final instructions on keying of locks has been fulfilled.

C. Samples of each type of exposed hardware unit in finish indicated and tagged with full description for coordination with schedule. Submit samples prior to submission of final hardware schedule.
1. Samples will be returned to the supplier. Units that are acceptable and remain undamaged through submittal, review, and field comparison process may, after final check of operation, be incorporated in the Work, within limitations of keying coordination requirements.

D. Templates for doors, frames, and other work specified to be factory prepared for the installation of door hardware. Check shop drawings of other work to confirm that adequate provisions are made for locating and installing door hardware to comply with indicated requirements.
E. Contract closeout submittals:
1. Operation and maintenance data: Complete information for installed door hardware.
2. Warranty: Completed and executed warranty forms.

1.6 QUALITY ASSURANCE:

A. Single Source Responsibility: Obtain each type of hardware (latch and locksets, hinges, closers, etc.) from a single manufacturer.

B. Supplier Qualifications: A recognized architectural door hardware supplier, with warehousing facilities in the Project's vicinity, that has a record of successful in-service performance for supplying door hardware similar in quantity, type, and quality to that indicated for this Project and that employs an experienced architectural hardware consultant (AHC), or equivalent, who is available to

Owner, Architect, and Contractor, at reasonable times during the course of the Work, for consultation.

1. Require supplier to meet with Owner to finalize keying requirements and to obtain final instructions in writing.
2. Required supplier to meet with installer prior to beginning of installation of door hardware.

C. Fire-Rated Openings: Provide door hardware for fire-rated openings that complies with NFPA Standard No. 80 requirements of authorities having jurisdiction. Provide only items of door hardware that are listed and tested by UL or Warnock Hersey for given type/size opening and degree of label. Provide proper latching hardware, door closers, approved-bearing hinges and seals whether listed in the Hardware Schedule or not. All hardware shall comply with standards UBC 702 (1997) and UL 10C.

1. Where emergency exit devices are required on fire-rated doors, (with supplementary marking on doors' UL labels indicating "Fire Door to be equipped with Fire Exit Hardware") provide UL label on exit devices indicating "Fire Exit Hardware".

1.7 PRODUCT HANDLING:

A. Tag each item or package separately with identification related to final hardware schedule, and include basic installation instructions with each item or package.

B. Packaging of door hardware is responsibility of supplier. As material is received by hardware supplier from various manufacturers, sort and repackage in containers clearly marked with appropriate hardware set number to match set numbers of approved hardware schedule. Two or more identical sets may be packed in same container.

C. Inventory door hardware jointly with representatives of hardware supplier and hardware installer until each is satisfied that count is correct.

D. Deliver individually packaged door hardware items promptly to place of installation (shop or Project site).

E. Provide secure lock-up for door hardware delivered to the Project, but not yet installed. Control handling and installation of hardware items that are not immediately replaceable so that completion of the Work will not be delayed by hardware losses both before and after installation.

1.8 WARRANTY:

A. Special warranties:

1. Door Closers: Twenty-five year period
2. Exit Devices: Ten year period
3. Locksets: Limited lifetime

1.9 MAINTENANCE:

A. Maintenance Tools and Instructions: Furnish a complete set of specialized tools and maintenance instructions as needed for Owner's continued adjustment, maintenance, and removal and replacement of door hardware.

B. Parts kits: Furnish manufacturers' standard parts kits for locksets, exit devices, and door closers.

PART 2 - PRODUCTS

2.1 MANUFACTURED UNITS:
(* Denotes manufacturer referenced in the Hardware Headings)

A. Hinges:
1. Acceptable manufacturers:
a. Bommer
b. Ives
c. PBB*
2. Characteristics:
a. Templates: Provide only template-produced units.
b. Screws: Provide Phillips flat-head screws complying with the following requirements:
1) For metal doors and frames install machine screws into drilled and tapped holes.
2) For wood doors and frames install threaded-to-the-head wood screws.
3) For fire-rated wood doors install #12 x 1-1/4 inch, threaded-to-the-head steel wood screws.
4) Finish screw heads to match surface of hinges or pivots.
c. Hinge pins: Except as otherwise indicated, provide hinge pins as follows:
1) Out-Swing Exterior Doors: Non-removable pins.
2) Out-Swing Corridor Doors with Locks: Non-removable pins.
3) Interior Doors: Non-rising pins.
4) Tips: Flat button and matching plug. Finished to match leafs.
d. Size: Size hinges in accordance with specified manufacturer’s published recommendations.
e. Quantity: Furnish one pair of hinges for all doors up to 5'0" high. Furnish one hinge for each additional 2-1/2 feet or fraction thereof.

B. Continuous Hinges:
1. Acceptable manufacturers:

a. PBB
b. Select Products*
c. Zero

2. Characteristics:
   a. Continuous gear hinges to be manufactured of extruded 6063-T6 aluminum alloy with anodized finish, or factory painted finish as scheduled.
   b. All hinges are to be manufactured to template. Uncut hinges shall be non-handed and shall be a pinless assembly of three interlocking extrusions applied to the full height of the door and frame without mortising.
   c. Vertical door loads shall be carried on 32 each (per 83” hinge) chemically lubricated polyacetal thrust bearings. The door and frame leaves shall be continually geared together for the entire hinge length and secured with a full cover channel. Hinge to operate to a full 180°.
   d. Hinges to be milled then anodized and assembled in matching pairs. Fasteners supplied shall be 410 stainless steel, plated and hardened.
   e. Provide UL listed continuous hinges at fire doors. Continuous hinges at fire doors (suffix -FR) shall meet the required ratings without the use of auxiliary fused pins or studs.

C. Pivot Sets:
   1. Acceptable manufacturers:
      a. ABH*
      b. Ives
      c. Rixson
   2. Characteristics:
      a. Pivots to be high strength forged bronze with top pivot housing with spring activated bronze retracting pin. Pivots to have tilt-on bearing and bearing pin.

D. Cylinders:
   1. Acceptable manufacturers:
   2. Acceptable manufacturers:
      a. PDQ*
      b. Schlage
      c. Sargent
   3. Characteristics:
      a. Review the keying system with the Owner and provide the type required, integrated with the Owner’s existing system.
      b. Equip locksets with manufacturer’s special tumbler cylinder with construction master key feature that permits voiding of construction keying without cylinder removal
      c. Metals: Construct lock cylinder parts from brass or bronze, stainless steel, or nickel silver.

d. Comply with Owner's instructions for master keying and, except as otherwise indicated, provide individual change key for each lock that is not designated to be keyed alike with a group of related locks.
   1) Permanently inscribe each key with number of lock that identifies cylinder manufacturer's key symbol, and notation, “DO NOT DUPLICATE."
e. Key Material: Provide keys of nickel silver only.
f. Key Quantity: Furnish 3 change keys for each lock, 5 master keys for each master system, 5 grandmaster keys for each grandmaster system, and 5 control keys for interchangeable core series.
   1) Furnish one extra blank for each lock.
   2) Deliver keys to Owner.

E. Locksets, Latchsets, Deadbolts:
1. Acceptable manufacturers:
   a. PDQ*
   b. Schlage
   c. Sargent
2. Mortise Locksets and Latchsets: as scheduled.
   a. Chassis: critical components are brass or corrosion-treated steel.
   b. Latchbolts: 3-4 inch throw brass.
   c. Deadbolt: 1 inch throw, stainless steel.
   d. Lever Trim: accessible design as scheduled..
   e. Electric operation: Manufacturer-installed continuous duty solenoid.
   f. Strikes: Conforms to ANSI 115.2.
   g. Scheduled Lock Series and Design: PDQ MR series, PJEJ trim.
   h. Certifications:
      1) ANSI A156.13, Series 1000, Grade 1

F. Exit Devices:
1. Acceptable manufacturers:
   a. Precision
   b. PDQ*
   c. Von Duprin
2. Characteristics:
   a. Exit devices shall be "UL" listed for life safety. All exit devices for fire rated openings shall have “UL" labels for “Fire Exit Hardware."
   b. All exit devices mounted on labeled wood doors shall be mounted on the door per the door manufacturer’s requirements.
   c. All trim shall be thru-bolted to the lock stile case.
   d. All exit devices shall be made of brass, bronze, stainless steel, or aluminum material, powder coated, anodized, or plated to the standard architectural finishes to match the balance of the door hardware.

e. Provide glass bead conversion kits to shim exit devices on doors with raised glass heads.
f. All exit devices shall be one manufacturer. No deviation will be considered.
g. All exit devices shall be non-handed. Touchpad shall extend a minimum of 1/2 of the door width and shall extend to the height of the cross rail housing for a “no pinch” operation. Plastic touchpads are not acceptable. All latchbolts to be the deadlocking type.
h. Surface vertical rod devices shall be UL labeled for fire door applications without the use of bottom rod assemblies. Where bottom rods are required for security applications, the devices shall be UL labeled for fire doors applications with rod and latch guards by the device manufacturer.

G. Closers and Door Control Devices:
1. Acceptable manufacturers:
a. Corbin/Russwin
b. LCN
c. PDQ*
2. Characteristics:
a. Door closers shall have fully hydraulic, full rack and pinion action with a high strength cast iron cylinder.
b. All closers shall utilize a stable fluid withstanding substantial temperature range without seasonal adjustment of closer speed to properly close the door.
c. Spring power shall be continuously adjustable over the full range of closer sizes, and allow for reduced opening force for the physically handicapped. Hydraulic regulation shall be by tamper-proof, non-critical valves. Closers shall have separate adjustment for latch speed, general speed and back check.
d. Access-Free Manual Closers: Where manual closers are indicated for doors required to be accessible to the physically handicapped provide adjustable units complying with ADA and ANSI A-117.1 provisions for door opening force.
e. Closers to be installed to allow door swing as shown on plans. Doors swinging into exit corridors shall provide for corridor clear width as required by code. Where possible, mount closers inside rooms.

H. Overhead Door Holders:
1. Acceptable manufacturers:
   a. ABH*
   b. Glynn Johnson
   c. Rixson Firemark
2. Characteristics:
   a. Provide medium duty door holders (concealed and surface mounted) of stainless steel.
   b. Concealed holders to be installed with the jamb bracket mortised flush with the bottom of the jamb. The arm and channel to be mortised into the door.
   c. Surface holders to be installed with the jamb bracket mounted on the stop.

I. Floor Stops and Wall Bumpers:
1. Acceptable manufacturers:
   a. Burns*
   b. Hiawatha
   c. Trimco
2. Characteristics: Refer to Hardware Headings.

J. Door Bolts/Coordinators:
1. Acceptable manufacturers:
   a. Burns*
   b. Hiawatha
   c. Trimco
2. Characteristics:
   a. Flush bolts to be forged brass 6-3/4" x 1", with 1/2" diameter bolts. Plunger to be supplied with milled surface one side that fits into a matching guide.
   b. Automatic flush bolts to be UL listed as top and bottom bolts on a pair of classified fire doors. Bolt construction to be of rugged steel and brass components.
   c. Self latching flush bolts to be UL listed as top and bottom bolts on a pair of classified fire doors. Bolt construction to be of rugged steel and brass components.
   d. Automatic flush bolts and self-latching flush bolts shall be UL listed for fire door application without bottom bolts (LBB).
   e. Coordinator to be soffit mounted non-handed fully automatic UL listed coordinating device for sequential closing of paired doors with or without astragals.
   f. Provide filler pieced to close the header. Provide brackets as required for mounting of soffit applied hardware.

K. Protective Plates:
1. Acceptable manufacturers:
   a. Burns*

b. Hiawatha
c. Trimco

2. Characteristics:
   a. Provide manufacturers standard exposed fasteners for door trim units consisting of either machine screws or self-tapping screws.
   b. Materials:
      1) Metal Plates: Stainless Steel, .050 inch (U.S. 18 gage).
   c. Fabricate protection plates not more than 2 inches less than door width on hinge side and not more than 1 inch less than door width on pull side.
   d. Heights:
      1) Kick plates to be 10 inches in height.
      2) Mop plates to be 4 inches in height.
      3) Armor plates to be 36 inches in height. Armor plates on fire doors to comply with NFPA 80.

L. Thresholds:
1. Acceptable manufacturers:
   a. National Guard Products, Inc.*
   b. Reese Industries
   c. Zero Weatherstripping Co., Inc.
2. Types: Indicated in Hardware Headings.

M. Door Seals/Gasketing:
1. Acceptable manufacturers:
   a. National Guard Products, Inc.*
   b. Reese Industries
   c. Zero Weatherstripping Co., Inc.
2. Types: Indicated in Hardware Headings.

N. Silencers:
1. Acceptable manufacturers:
   a. Burns*
   b. Deutscher
   c. Ives
2. Three for each single doors; four for pairs of doors.

O. Key Cabinet and System:
1. Acceptable manufacturers:
   a. Telkee
   b. Lund
2. Provide a key control system including envelopes, labels, tags with self-locking key clips, receipt forms, 3-way visible card index, temporary markers, permanent markers, and standard metal cabinet, all as recommended by system manufacturer, with capacity for 150 percent of the number of locks required for the Project.

a. Provide complete cross index system set up by key control distributor, and place keys on markers and hooks in the cabinet as determined by the final key schedule.
b. Provide hinged-panel type cabinet for wall mounting.

P. Security Equipment:
1. Acceptable manufacturers:
a. Alarm Lock*
b. Von Duprin
c. HES
2. Characteristics:
a. Provide items as found in Hardware Headings.
3. Coordinate security equipment with Electrical.

2.2 MATERIALS AND FABRICATION:

A. Manufacturer's Name Plate: Do not use manufacturers' products that have manufacturer's name or trade name displayed in a visible location (omit removable nameplates) except in conjunction with required fire-rated labels and as otherwise acceptable to Architect.
1. Manufacturer's identification will be permitted on rim of lock cylinders only.

B. Base Metals: Produce hardware units of basic metal and forming method indicated, using manufacturer's standard metal alloy, composition, temper, and hardness, but in no case of lesser (commercially recognized) quality than specified for applicable hardware units by applicable ANSI/BHMA A156 series standards for each type of hardware item and with ANSI/BHMA A156.18 for finish designations indicated. Do not furnish "optional" materials or forming methods for those indicated, except as otherwise specified.

C. Fasteners: Provide hardware manufactured to conform to published templates, generally prepared for machine screw installation.
1. Do not provide hardware that has been prepared for self-tapping sheet metal screws, except as specifically indicated.
2. Furnish screws for installation with each hardware item. Provide Phillips flat-head screws except as otherwise indicated. Finish exposed (exposed under any condition) screws to match hardware finish or, if exposed in surfaces of other work, to match finish of this other work as closely as possible including “prepared for paint" surfaces to receive painted finish.
3. Provide concealed fasteners for hardware units that are exposed when door is closed except to the extent no standard units of type specified are available with concealed fasteners.

4. Do not use thru-bolts or sex bolts for installation where bolt head or nut on opposite face is exposed in other work unless their use is the only means of adequately fastening the hardware, or otherwise found in Headings. Coordinate with wood doors and metal doors and frames where thru-bolts are used as a means of reinforcing the work, provide sleeves for each thru-bolt or use sex screw fasteners.

2.3 HARDWARE FINISHES:

A. Match items to the manufacturer's standard color and texture finish for the latch and lock sets (or push-pull units if no latch of lock sets).

B. Provide finishes that match those established by ANSI or, if none established, match the Architect's sample.

C. Provide quality of finish, including thickness of plating or coating (if any), composition, hardness, and other qualities complying with manufacturer's standards, but in no case less than specified by referenced standards for the applicable units of hardware.

D. Provide protective lacquer coating on all exposed hardware finishes of brass, bronze, and aluminum, except as otherwise indicated. The suffix "-NL" is used with standard finish designations to indicate "no lacquer."

E. The designations used to indicate hardware finishes are those listed in ANSI/BHMA A156.18, "Materials and Finishes," including coordination with the traditional U.S. finishes shown by certain manufacturers for their products.
   1. Hinges (Exterior): 630 (US32D) Satin Stainless Steel
   2. Hinges (Interior wood doors): 652 (US26D) Satin Chrome Plated Steel
   3. Hinges (Interior metal doors): 600 (USP)
   4. Continuous Hinges: 628 (US28) Clear Anodized Aluminum
   5. Flush Bolts: 626 (US26D) Satin Chrome Plated Brass/Bronze
   6. Locks: 630 (US32D) Satin Chrome Plated
   7. Exit Devices: 630 (US32D) Satin Stainless Steel
   8. Door Closers: Match adjacent hardware
   9. Protective Plates: 630 (US32D) Satin Stainless Steel
   10. Door Stops: 626 (US26D) Satin Chrome Plated Brass/Bronze
   11. Overhead Holders: 630 Satin Stainless Steel
   12. Thresholds/Weatherstripping: 630 (US32D) 627/628 (US27/US28) Aluminum

PART 3 - EXECUTION

I.INSTALLATION:

1. Mount hardware units at heights indicated in following applicable publications, except as specifically indicated or required to comply with governing regulations and except as otherwise directed by Architect.
   A. "Recommended Locations for Builders Hardware for Standard Steel Doors and Frames" by the Door and Hardware Institute.
   B. "Recommended Locations for Builders Hardware for Custom Steel Doors and Frames" by the Door and Hardware Institute.
   C. NWWDA Industry Standard I.S.1.7, "Hardware Locations for Wood Flush Doors."

2. Install each hardware item in compliance with the manufacturer's instructions and recommendations. Where cutting and fitting is required to install hardware onto or into surfaces that are later to be painted or finished in another way, coordinate removal, storage, and reinstallation or application of surface protection with finishing work specified in the Division 9 Sections. Do not install surface-mounted items until finishes have been completed on the substrates involved.

3. Set units level, plumb, and true to line and location. Adjust and reinforce the attachment substrate as necessary for proper installation and operation.

4. Drill and countersink units that are not factory prepared for anchorage fasteners. Space fasteners and anchors in accordance with industry standards.

5. Set thresholds for exterior doors in full bed of butyl-rubber or polyisobutylene mastic sealant complying with requirements specified in Division 7 Section “Joint Sealers”.

6. Weatherstripping and Seals: Comply with manufacturer's instructions and recommendations to the extent installation requirements are not otherwise indicated.

J. ADJUSTING, CLEANING, AND DEMONSTRATING:

1. Adjust and check each operating item of hardware and each door to ensure proper operation or function of every unit. Replace units that cannot be adjusted to operate freely and smoothly or as intended for the application made.
   A. Where door hardware is installed more than one month prior to acceptance or occupancy of a space or area, return to the installation during the week prior to acceptance or occupancy and make final check and adjustment of all hardware items in such space or area. Clean operating items as necessary to restore proper function and finish of hardware and doors. Adjust door control devices to function properly with final operation of heating and ventilating equipment.

2. Clean adjacent surfaces soiled by hardware installation.

3. Door Hardware Supplier's Field Service
   A. Inspect door hardware items for correct installation and adjustment after complete installation of door hardware.
   B. Instruct Owner's personnel in the proper adjustment and maintenance of door hardware and hardware finishes.
   C. File written report of this inspection to Architect.

4. Prior to project completion, representatives of the lock, exit device and overhead closer manufacturers shall inspect and adjust all units and certify that all units are installed in accordance with the manufacturer's instructions, and are regulated properly and functioning correctly. A written report shall be provided to the Architect as to the inspection and shall include appropriate certificates.

K. HARDWARE SCHEDULE:

DOORS #: 101, 102, 103, 104, 110, 111, 115

NOTE: ALL HARDWARE BY DOOR SUPPLIER.

DOORS #: 105, 106, 107, 112, 113, 114

EACH DOOR TO HAVE:

1	CONTINUOUS HINGE	SL300 X CTP
1	ELECTRIC POWER TRANSFER	PT180 (ABH)
1	EXIT DEVICE	6200R X ELSS X 629GPG
1	CYLINDER	17
1	ACCESS CARD READER	BY SECURITY SYSTEM PROVIDER
1	POWER SUPPLY	81406
1	DOOR POSITION SWITCH	BY SECURITY SYSTEM PROVIDER
1	CLOSER	7101DSHO X SCS
1	THRESHOLD	512SS
1	SET DOOR SEALS	130SSS
1	DOOR BOTTOM SEAL	200SSS

NOTE: COORDINATE SECURITY HARDWARE WITH SECURITY AND ELECTRICAL SYSTEM.

DOORS #: 108

EACH DOOR TO HAVE:

1	CONTINUOUS HINGE	SL11HD X EPT
1	ELECTRIC POWER TRANSFER	PTR180 (ABH)
1	EXIT DEVICE	6200R X ELSS X 629GPG
1	CYLINDER	17
1	ACCESS CARD READER	BY SECURITY SYSTEM PROVIDER
1	POWER SUPPLY	81406
1	DOOR POSITION SWITCH	BY SECURITY SYSTEM PROVIDER
1	CLOSER	7101DSHO X SCS X DPPA
1	THRESHOLD	425
1	SET DOOR SEALS	BY DOOR MANUFACTURER
1	DOOR BOTTOM SEAL	200S

NOTE: COORDINATE SECURITY HARDWARE WITH SECURITY AND ELECTRICAL SYSTEM.

DOORS #: 109

EACH DOOR TO HAVE:

1	CONTINIUOUS HINGE	SL300
1	PASSAGE SET	MR126
1	CLOSER	7101DSHO X SCS
1	THRESHOLD	512SS
1	SET DOOR SEALS	130SSS
1	DOOR BOTTOM SEAL	200SSS

DOORS #: 116

EACH DOOR TO HAVE:

1	CONTINUOUS HINGE	SL300
1	PASSAGE SET	MR126
1	CLOSER	7101DSHO X SCS
1	THRESHOLD	512SS
1	SET DOOR SEALS	130SSS
1	DOOR BOTTOM SEAL	200SSS

DOORS #: 201

EACH DOOR TO HAVE:

1	CONTINUOUS HINGE	SL18HD X CTW-4
1	ELECTRIFIED LOCKSET	MR199 X FSC
1	ACCESS CARD READER	BY SECURITY SYSTEM PROVIDER
1	DOOR POSITION SWITCH	BY SECURITY SYSTEM PROVIDER
1	CLOSER	7101HO X RA
1	KICK PLATE	KP50 X B4E X CSK
1	THRESHOLD	896S
1	SET DOOR SEALS	155S
1	DOOR BOTTOM SEAL	200S

NOTE: COORDINATE SECURITY HARDWARE WITH SECURITY AND ELECTRICAL SYSTEM. ENSURE ELECTRIFIED LOCK WILL FUNCTION WITH CARD READER POWER SUPPLY.

DOORS #: 202

EACH DOOR TO HAVE:

3	HINGES	4B81
1	EXIT DEVICE	6200R-F X 629LPEKFH
1	CYLINDER	17
1	CLOSER	7101D X RA
1	KICK PLATE	KP5O X B4E X CSK
1	DOOR STOP	565/522 (FLOOR AS REQUIRED)
1	SET DOOR SEALS	5020

DOORS #: 203, 204, 205, 212

EACH DOOR TO HAVE:

2	HINGES	4B81
1	ELECTRIC HINGE	4B81 X EL4
1	ELECTRIFIED LOCKSET	MR199 X FS
1	ACCESS CARD READER	BY SECURITY SYSTEM PROVIDER
1	CLOSER	7101 X RA
1	KICK PLATE	KP50 X B4E X CSK
1	DOOR STOP	565/522 (FLOOR AS REQUIRED)

1	COAT HOOK	601
1	SET DOOR SEALS	5020

NOTE: COORDINATE SECURITY HARDWARE WITH SECURITY AND ELECTRICAL SYSTEM. ENSURE ELECTRIFIED LOCK WILL FUNCTION WITH CARD READER POWER SUPPLY.

DOORS #: 207

EACH DOOR TO HAVE:

3	HINGES	4B81
1	PASSAGE SET	MR126
1	CLOSER	7101 X RA
1	KICK PLATE	KP50 X B4E X CSK
1	DOOR STOP	565/522 (FLOOR AS REQUIRED)
1	SET DOOR SEALS	5020

DOORS #: 208, 214, 216

CASED OPENING

DOORS #: 206, 218

EACH DOOR TO HAVE:

1	CONTINUOUS HINGE	SL18HD X EPT
1	ELECTRIC POWER TRANSFER	PT180 (ABH)
1	EXIT DEVICE	6200R X ELSS X 629GPG
1	CYLINDER	17
1	ACCESS CARD READER	BY SECURITY SYSTEM PROVIDER
1	POWER SUPPLY	81406
1	DOOR POSITION SWITCH	BY SECURITY SYSTEM PROVIDER
1	CLOSER	7101DSHO X SCS X DPPA
1	KICK PLATE	KP50 X B4E X CSK
1	THRESHOLD	425
1	SET DOOR SEALS	BY DOOR MANUFACTURER
1	DOOR BOTTOM SEAL	200S

NOTE: COORDINATE SECURITY HARDWARE WITH SECURITY AND ELECTRICAL SYSTEM.

DOORS #: 209

EACH PAIR TO HAVE:

1	CONTINUOUS HINGE	SL18HD X CTW-4 (ACTIVE)
1	CONTINUOUS HINGE	SL18HD (INACTIVE)
1	SET FLUSHBOLTS	590 X 5R45 (INACTIVE)
1	ELECTRIFIED LOCKSET	MR199 X FSC (ACTIVE)
1	ACCESS CARD READER	BY SECURITY SYSTEM PROVIDER
2	DOOR POSITION SWITCHES	BY SECURITY SYSTEM PROVIDER
2	CLOSERS	7101DSHO X SCS
2	ARMOR PLATES	AP50 X B4E X CSK
1	THRESHOLD	425HD
1	SET DOOR SEALS	155S
2	DOOR BOTTOM SEALS	200S
1	ASTRAGAL SET	600
1	LATCH GUARD	620

NOTE: COORDINATE SECURITY HARDWARE WITH SECURITY AND ELECTRICAL SYSTEM. ENSURE ELECTRIFIED LOCK WILL FUNCTION WITH CARD READER POWER SUPPLY.

DOORS #: 210

EACH DOOR TO HAVE:

2	HINGES	4B81
1	ELECTRIC HINGE	4B81 X EL4
1	ELECTRIFIED LOCKSET	MR199 X FS
1	ACCESS CARD READER	BY SECURITY SYSTEM PROVIDER
1	CLOSER	7101 X RA
1	KICK PLATE	KP50 X B4E X CSK
1	DOOR STOP	565/522 (FLOOR AS REQUIRED)
1	SET DOOR SEALS	5020

NOTE: COORDINATE SECURITY HARDWARE WITH SECURITY AND ELECTRICAL SYSTEM. ENSURE ELECTRIFIED LOCK WILL FUNCTION WITH CARD READER

POWER SUPPLY.

DOORS #: 211, 213

EACH DOOR TO HAVE:

3	HINGES	BB81
1	PASSAGE SET	MR126
1	KICK PLATE	KP50 X B4E X CSK
1	DOOR STOP	565/522 (FLOOR AS REQUIRED)

DOORS #: 215, 217

EACH DOOR TO HAVE:

3	HINGES	4B81
1	PUSH/PULL SET	74 X 54M26D X TYPE 12 MTG.
1	CLOSER	7101HO X RA
1	KICK PLATE	KP50 X B4E X CSK
1	MOP PLATE	MP50 X B4E X CSK
1	DOOR STOP	565/522 (FLOOR AS REQUIRED)

DOORS #: 219

EACH DOOR TO HAVE:

3	HINGES	4B81
1	EXIT DEVICE	6200R-F X 629LPENFH
1	CYLINDER	17
1	CLOSER	7101DS X SCS
1	KICK PLATE	KP5O X B4E X CSK
1	SET DOOR SEALS	5020

DOORS #: 220

EACH PAIR TO HAVE:

1	CONTINUOUS HINGE	SL18HD X EPT
1	CONTINUOUS HINGE	SL18HD
1	ELECTRIC POWER TRANSFER	PT180 (ABH)
1	EXIT DEVICE	6200R X ELSS X 629GPG
1	EXIT DEVICE	6200R
1	REMOVABLE MULLION	9200MA-11
1	ACCESS CARD READER	BY SECURITY SYSTEM PROVIDER
1	POWER SUPPLY	81406
2	DOOR POSITION SWITCHES	BY SECURITY SYSTEM PROVIDER
2	CLOSERS	7101DSHO X SCS
2	ARMOR PLATES	AP50 X B4E X CSK
1	THRESHOLD	425HD
1	SET DOOR SEALS	155S
2	DOOR BOTTOM SEALS	200S
1	MULLION SEAL	5100S

NOTE: COORDINATE SECURITY HARDWARE WITH SECURITY AND ELECTRICAL SYSTEM.

END OF SECTION

SECTION 08800

GLAZING

PART 1 - GENERAL

1.1 SUMMARY:

A. Related work:
1. Joint sealants.
2. Aluminum-framed entrances and storefronts.
3. Curtain wall.

1.2 SUBMITTALS:

A. Samples: Submit minimum 1'-0" by 1'-0" samples of each type glazing material proposed for use, if requested by Architect.

B. Product data: Submit for each type of glazing material and accessory product specified. Include technical data, storage and handling procedures and performance characteristics.

C. Framing manufacturer's approval: Prior to submission of shop drawings, indicate by letter that an authorized representative of storefront framing manufacturer has reviewed and approved details, including glass bite, clearances and glazing methods.

D. Calculations: Submit for Architect's information only.
1. Submit calculations prepared by glazing material manufacturer indicating recommendations for glass thickness and heat treating of glazing materials as a result of heat stress, building orientation, inside window treatments, shading by exterior building components or wind loading.
2. Identify factors affecting breakage probability which have been taken into consideration and breakage probability anticipated by calculations.

E. Maintenance data: Submit glazing material manufacturer's maintenance data for cleaning and care of each type of glazing material.

1.3 QUALITY ASSURANCE:

A. Applicable standards:
1. American National Standards Institute (ANSI), "Safety Performance Standards and Methods of Tests for Safety Glazing Materials used in Buildings," Z97.1.
2. ASTM International (ASTM), standards as referenced herein.
3. Consumer Product Safety Commission (CPSC), "Safety Standard for Architectural Glazing Materials," 16-CFR, Chapter II, Part 1201.
4. Glass Association of North America (GANA) "Glazing Manual”.

5. National Fire Protection Association (NFPA), standards as referenced herein.
6. Underwriters Laboratories (UL).

B. Design criteria:
1. Wind loads: Comply with wind load criteria specified in Aluminum-Framed Entrances and Storefronts section.
2. Thermal insulated units: Units shall comply with the requirements of ASTM E2190-08 and be certified by Associated Laboratories, Inc., (ALI) or Insulating Glass Certification Council (IGCC) for Class A.
3. Tempered and heat-treated glass:
   a. Glazing materials, whether in monolithic state or as a lite of a thermal insulated unit, shall be tempered or otherwise heat-treated where required by glass manufacturer's design calculations to resist stress caused by glass orientations, sizes and configurations, heat stress, inherent imperfections, wind loading, glazing conditions, temperature differential, inside window treatments or other conditions affecting breakage probability.
   b. Orient lites with roll distortion parallel to head and sill members.
   c. Maximum allowable breakage probability at design loads shall be eight lites per thousand.
4. Safety glazing: Tempered and fire protection and human impact safety rated glazing materials shall comply with safety glazing requirements of CPSC 16-CFR, Part 1201, Category II, with testing requirements of ASTM C1048-04, and with code requirements for locations of safety glazing.
5. Weathering of plastic glazing: Plastic glazing materials shall meet weathering requirements of ANSI Z97.1.

C. Labeling:
1. Safety glazing labeling: Permanently mark safety glazing with a certification label of a certifying agency acceptable to authorities having jurisdiction. Label shall indicate manufacturer's name, type of glass, thickness, and safety glazing standard with which glass complies.
2. Fire-protection rated glazing labeling: Permanently mark fire-protection-rated glazing with a certification label of a testing agency acceptable to authorities having jurisdiction. Label shall indicate manufacturer's name, test standard, whether glazing is for use in fire doors or other openings, whether or not glazing passes hose-stream test, whether or not glazing has a temperature rise rating of 450 deg F, and the fire-resistance rating in minutes.

D. Allowable tolerances; multiple mirror installations:
1. Fabrication tolerances:
   a. Variation in mirror dimensions: ±1/32".
   b. Variation in square (diagonal measurements): ±1/16".
2. Installation tolerances:
   a. Variation in plumb or square: ±1/8" in 10'-0".

b. Variation in face plane of adjacent mirrors: ±1/32".

E. Fire-protection rated glazing:
1. Shall comply with NFPA 80.
2. Shall have been tested in accord with NFPA 257 under positive pressure with at least 2/3 of specimen above neutral plane within 10 minutes.
3. Shall have permanently affixed label with manufacturer's name, test and rating.

F. Pre-glazing conference:
1. Prior to beginning glass and glazing work, a preglazing conference will be held to review work to be accomplished.
2. Contractor, Architect, storefront supplier and erector, a representative of glass manufacturer, a representative of sealant manufacturer and glazing subcontractor will be present.
3. Contractor shall notify all parties at least seven days prior to time of conference.
4. Material submitted by Contractor, interfacing of glass and glazing and window wall work, dimensions and tolerances, sealant joint widths and depths shall be reviewed.

1.4 DELIVERY, STORAGE AND HANDLING:

A. Store glazing materials indoors in cool, dry area, off floor, supported to prevent stress and breakage.

B. Move no cases which have been partially unpacked. Unpack glazing materials in accord with manufacturer's product data for type of material being handled. Stack individual lites as recommended by manufacturer's product data.

C. Utilize rolling blocks to rotate glazing materials.

D. Handle insulated units without rotating, warping or "cartwheeling" units. Prevent damage to glazing material or edge seal.

1.5 WARRANTIES:

A. Thermal insulated units: Warrant from failure due to loss of edge seal for a period of ten years, beginning at Date of Substantial Completion.

B. Glass replacement warranty: Include a two-year warranty covering glazing materials and labor to replace glazing damaged for any reason other than natural disasters, vandalism or damage resulting from accident or abuse arising out of Owner's operations.

PART 2 - PRODUCTS

2.1 MANUFACTURERS:

A. Acceptable float glass manufacturers; subject to compliance with specified requirements:
   1. AGC Flat Glass North America.
   2. Guardian Industries Corp.
   3. Pilkington, Building Products North America.
   4. PPG Industries, Inc./Glass Group.

B. Acceptable glass unit fabricators; subject to compliance with specified requirements:
   1. Oldcastle Building Envelope.
   2. Trulite Glass & Aluminum Solutions (formerly Arch Aluminum and Glass and Vitro America.)
   3. Viracon, Inc.

C. Acceptable low-emissivity (Low-E) glass fabricators; subject to compliance with specified requirements:
   1. AGC Flat Glass North America.
   2. Guardian Industries Corp.
   3. Oldcastle Building Envelope.
   4. Pilkington, Building Products North America.
   5. PPG Industries, Inc./Glass Group.
   6. Viracon, Inc.

D. Acceptable fire-protection rated and safety-rated ceramic glass manufacturers; subject to compliance with specified requirements:
   1. Basis of design: Technical Glass Products (TGP)/Pilkington, premium grade, Firelite Plus, Firelite NT and Pyrostop, depending on rating required.
   2. Specialty Architectural & Fire Technology International (SAFTI). Div./O'Keeffe's, Inc.
   3. Schott North America.
   4. Vetrotech Saint-Gobain.

2.2 GLAZING MATERIALS:

A. General flat glass standard: Comply with ASTM C1036-06 as follows:
   1. Transparent flat glass, clear: Type I, Class 1-Clear, Quality - Q3.
   2. Transparent flat glass, tinted: Type I, Class 2-Tinted, Quality - Q3.
   3. Mirrors: Type I, Class 1-Clear, Quality - Q1.

B. Clear tempered monolithic glass: Minimum 1/4" thickness, fully tempered, complying with ASTM C1048-04.

C. Fire protection and human impact safety rated glass: Clear UL listed as fire resistant; 1/4" thickness.

D. Thermal insulated units:
   1. Basis of design: PPG Solarban R100 Clear (Surface #2).
   2. Tempered units:
      a. Inboard lite: Clear color, tempered float glass; minimum 1/4" thickness.
      b. Outboard lite: Color as selected by Architect from manufacturer's full range, tempered float glass; minimum 1/4" thickness. Provide Low-E coating on #2 surface.
      c. Unit thickness: 1" minimum.
   3. Spacer: Manufacturer's standard steel or aluminum spacer with welded, soldered, fused or bent corners and welded, soldered or fused splices and joints, filled with desiccant; to provide a 1/2" thickness, hermetically sealed, dehydrated air space.
   4. Minimum performance characteristics (based on clear interior and exterior glass):
      a. Shading coefficient: 0.27.
      b. Solar heat gain coefficient: 0.23.
      c. U-values (BTU.hr/ft^2/F):
         1). Winter nighttime: 0.29
         2) Summer Daytime: 0.27.
      d. Light to solar gain ratio (LSG): 1.79.
      e. Transmittance (%):
         1) Visible: 41.
         2) Ultralight / Krochman Damage Weighted: 11 / 21.
         3) Total solar energy: 19.
      f. Reflectance (%):
         1) Visible (Out): 32.
         2) Visible (In): 13.
         3) Total solar energy (Out): 41.

2.3 GLAZING SEALANTS:

A. General:
   1. Compatibility: Provide glazing sealants that are compatible with one another and with other materials they will contact, including glass products, seals of insulating-glass units, and glazing channel substrates, under conditions of service and application, as demonstrated by sealant manufacturer based on testing and field experience.
   2. Suitability: Comply with sealant and glass manufacturers' written instructions for selecting glazing sealants suitable for applications indicated and for conditions existing at time of installation.

   Sealants used inside the weatherproofing system, shall have a VOC content of not more than 250 g/L when calculated according to 40 CFR 59, Subpart D (EPA Method 24).

B. Glazing sealants for fire-rated glazing products: Products that are approved by testing agencies that listed and labeled fire-resistant glazing products with which they are used for applications and fire-protection ratings indicated.

2.4 GLAZING ACCESSORIES:

A. Setting blocks: Neoprene, 70-90 Shore A durometer hardness, meeting ASTM C864-05.

B. Edge blocks for full rabbet glazing: Neoprene, 60-70 Shore A durometer hardness, meeting ASTM C864-05.

C. Spacers for full rabbet glazing: Neoprene, 40-50 Shore A durometer hardness, meeting ASTM C864-05.

D. Glazing gaskets: Glazing assembly manufacturer's standard extruded or molded neoprene or Ethylene Propylene Diene Monomer (EPDM) gaskets.

E. Polyvinyl chloride foam tape for interior glazing: Closed cell self-adhesive tape meeting ASTM D1667-08.

PART 3 - EXECUTION

3.1 EXAMINATION:

A. Verify compliance with the following requirements prior to beginning glazing work:
1. That framing is anchored in position, plumb and square within 1/8" of nominal dimensions indicated.
2. That fastener heads, and other projections are removed from glazing rabbets.
3. That corners and fabrication intersections are sealed and framing is weathertight.
4. That rabbets at sills weep to outside and rabbets are of sufficient depth and width to receive glazing material and provide the required bite of the glazing material.
5. That hollow metal frames have received paint finish in accord with Painting and Coating section.

3.2 PERFORMANCE REQUIREMENTS:

A. Install glazing materials to obtain airtight and watertight installation and to withstand normal temperature changes and wind loads without failure.

B. Protect glazing material faces and edges during handling and installation.

C. Size glazing materials for each opening to ensure correct bite on glazing material, without imposing strain, in accord with manufacturer's product data.

D. Maintain minimum bed clearance between glazing material and sash of 1/8", both sides, except where greater clearance is required by either glazing material or framing manufacturer.

3.3 PREPARATION OF SURFACES:

A. Clean glass edges and framing glazing channel of debris and protective coatings immediately prior to glazing. Use material acceptable to framing, glazing material and glazing sealant manufacturers.

B. Inspect glazing material prior to installation. Eliminate lites having face or edge damage.

C. Lites of tempered and insulated glass shall not be cut or otherwise altered in the field.

3.4 GLAZING PROCEDURES:

A. Install glazing materials in accord with manufacturer's product data and applicable standards, except where more stringent requirements are specified.

B. Install setting blocks for glazing materials over six sq. ft. in area. Install at sill rabbet at quarter points. Size setting blocks in proportion to glass weight; minimum 4" length.

C. Shim lites over 100 united inches, inboard and outboard, on all sides using continuous shims, except where gaskets accomplish shimming.

D. Provide edge blocks at vertical jambs to prevent lateral movement of glass. Provide edge blocks at 3" minimum length. Maintain 1/8" clearance between edge of glass and edge block.

E. Storefront glazing: Apply gasket to interior stop with mitered corners. Center glazing material in rabbet. Apply exterior gasket, with mitered corners. Oversize gaskets to compress miter joints to positive seal.

G. Interior channel glazing: Glaze using polyvinyl chloride tape applied to both sides, all stops. Place tape, with butted joints. Compress tape approximately 30 percent. Center glazing material in rabbet.

H. Fire protection and human impact safety rated glazing: Install in accord with fire-rated glass manufacturer's product data and in accord with NFPA 80.
   1. Verify that openings are plumb and square. Allow for an edge clearance of 1/4" minimum.
   2. Tape glass stops with 1/8" by 1/2" fiberglass tape or other approved flame resistant gasket material. Inspect edges of lites for damage.
   3. Place 3" high-temperature setting blocks at quarter points, check minimum edge clearances around entire perimeter, adjust setting blocks as required.

3.5 PROTECTION AND CLEANING:

A. For glazing materials subject to damage during construction, protect from breakage by attachment of crossed streamers to framing. Do not mark on surfaces.

B. Remove and replace broken, cracked, chipped or otherwise damaged glazing materials and materials not meeting specified design criteria prior to Date of Substantial Completion.

C. Final cleaning: Just prior to Date of Substantial Completion, clean glass inside and out. Clean using pre-tested detergent and water. Flush with clean water. Repair or replace work which cannot be cleaned or which has been damaged during construction operations.

END OF SECTION

SECTION 09260

GYPSUM BOARD ASSEMBLIES

PART 1 - GENERAL

1.1 SUMMARY:

A. Related work:
1. Rough carpentry.
2. Finish carpentry.
3. Acoustical ceilings.
4. Painting and coating.
5. Mechanical.
6. Electrical.

1.2 SUBMITTALS:

A. Product data: Indicate product description, including compliance with specified requirements and installation requirements. Include specific requirements for fire-rated and acoustically rated partitions. Mark manufacturer's brochures to include only those products proposed for use. Include details for supplementary fire protection at penetrations and locations of acoustical sealant.

1.3 QUALITY ASSURANCE:

A. Applicable standards; standards of the following:
1. American National Standards Institute (ANSI).
2. ASTM International (ASTM) as referenced herein.
3. Association of the Wall and Ceiling Industries - International (AWCI).
4. Ceilings and Interior Systems Construction Association (CISCA).
5. Gypsum Association (GA).
6. Steel Stud Manufacturers Association (SSMA).
7. Underwriters Laboratories, Inc. (UL).
8. Intertek Testing Services/Warnock Hersey, Inc. (WHI).
9. “Recommended Specification: Levels of Gypsum Board Finish” as published jointly by the Gypsum Association, AWCI, CISCA and PDCA.
10. Painting and Decorating Contractors of America (PDCA).

B. Design criteria:
1. Sound rating: Construct designated partitions in accord with manufacturer's product data, as submitted, for obtaining Sound Transmission Class (STC) ratings as indicated on drawings, in accord with ASTM E90-09.

2. Fire-resistance: Comply with fire-resistance designs indicated on drawings. Use only manufacturers and types of materials as required by indicated designs. Designs with tests by other than Testing Agency listed

may be submitted for Architect's acceptance, subject to prior acceptance by governing authorities.

3. Seismic performance: Comply with code requirements.

1.4 DELIVERY, STORAGE AND HANDLING:

A. Delivery: Deliver materials in original packages, containers or bundles bearing brand name, applicable standard designation and name of manufacturer or supplier.

B. Storage:
1. Stack gypsum board inside building under roof, off floor on pallets or similar platforms providing continuous support for gypsum board and to prevent sagging. Stack gypsum board flat and so that long lengths are not over short lengths.
2. Protect gypsum board from direct exposure to rain, snow, sunlight or other excessive weather conditions.
3. Protect ready-mixed joint compounds against freezing, exposure to extreme heat and direct sunlight at all times.
4. Do not overload floor systems.

1.5 PROJECT/SITE CONDITIONS:

A. Do not install gypsum board until installation areas are enclosed.

B. Environmental limitations: Comply with ASTM C840-08 requirements and gypsum board manufacturer's written recommendations, whichever are more stringent.
1. During mechanical application of gypsum board, maintain room temperature at not less than 40 degree F.
2. During joint treatment, and decoration, maintain room temperature not less than 50 degrees F for 48 hours prior to application and continuously thereafter until completely dry and until permanent heating system is in operation or building is occupied.
3. When temporary heat source is used, temperature shall not exceed 95 degree F in any given room or area.

C. Do not install panels that are wet, those that are moisture damaged, and those that are mold damaged.
1. Indications that panels are wet or moisture damaged include, but are not limited to, discoloration, sagging, or irregular shape.
2. Indications that panels are mold damaged include, but are not limited to, fuzzy or splotchy surface contamination and discoloration.

D. Ventilation: Comply with ASTM C840-08 requirements and gypsum board manufacturer's written recommendations, whichever are more stringent.
1. Provide ventilation during and following joint treatment applications, and drying and curing periods.
2. Use temporary air circulators in enclosed areas lacking natural ventilation.

3. Under slow drying conditions, allow additional drying time between coats of joint treatment.
4. Protect installed materials from drafts during hot, dry weather.

E. When recommendations of manufacturer's product data exceed the above, comply with requirements of manufacturer's product data.

PART 2 - PRODUCTS

2.1 FRAMING MEMBERS:

A. Gypsum board studs: Meeting requirements of ASTM C645-09a; channel type, roll-formed from hot dip galvanized steel complying with ASTM A1003-09 and with ASTM A653-09a, G40 minimum.
1. Stud size: As indicated on drawings.
2. Stud gauge: As required by manufacturer's product data for heights and conditions of use, minimum 20 gage, with maximum allowable deflections as follows:
a. Stairs and other vertical shafts: L/120 at 10 psf.
b. Ground floor lobbies: L/120 at 15 psf.
c. All other partitions: L/240 at 5 psf.

B. Floor and ceiling runners: Hot dip galvanized steel, 1" deep, minimum, by widths to receive studs, same gauge as studs. Runner tracks shall have slotted holes for attachment to structure and studs, for slip joints where required by manufacturer's product data.

2.2 GYPSUM BOARD:

A. Regular board: Meeting ASTM C1396-09a, thickness indicated, tapered rounded edges.

B. Fire-retardant board: Meeting ASTM C1396-09a, Type X, thickness indicated, tapered rounded edges.

C. Mold and moisture resistant board: Treated paper-faced gypsum board.
1. Acceptable products:
a. American Gypsum, M-Bloc.
b. National Gypsum, XP Gypsum Board and XP Fire-Shield Gypsum Board.
c. United States Gypsum (USG), Sheetrock Mold Tough Gypsum Panels.
2. Thickness: 5/8" thickness Type X Grade fire-rated board, tapered edges.
3. Description: Mold and moisture resistant gypsum core encased in mold and moisture resistant facers, with tapered long edges. Panels shall comply with ASTM C1396-09a.
4. Mold resistance: Resistant to mold growth when tested in accord with ASTM D3273-00(2005), score of 10.

5. Water absorption: Less than 5% of board weight when tested in accord with ASTM C473-09.
6. Joint tape: As recommended by gypsum board manufacturer.

D. Interior ceiling board: Meeting ASTM C1396-09a, 1/2" thickness, Regular Grade, tapered edges.

2.3 ABUSE-RESISTANT, IMPACT-RESISTANT BOARD:

A. Acceptable products:
1. LaFarge Gypsum, Protecta HIR 300 Type X Wallboard with mold and moisture resistance.
   a. Joint tape: Paper tape as approved by abuse-resistant panel manufacturer.
   b. Joint compound: Ready-mixed type as approved by abuse-resistant panel manufacturer.
   c. Other accessories: As recommended by abuse-resistant panel manufacturer.
2. National Gypsum Co., Hi-Impact Brand XP Wallboard with mold and moisture resistance.
   a. Joint tape: Paper tape as approved by abuse-resistant panel manufacturer.
   b. Joint compound: ProForm XP Ready Mix or ProForm Brand Sta-Smooth/Sta-Smooth Lite.
   c. Other accessories: As recommended by and as manufactured by abuse-resistant panel manufacturer.
3. United States Gypsum Company/USG Corp., Mold Tough VHI Abuse-Resistant Gypsum Panels with mold and moisture resistance.
   a. Joint tape: Sheetrock Joint Tape; paper tape.
   b. Joint compound: Sheetrock Durabond 45 or 90.
   c. Other accessories: As recommended by and as manufactured by abuse-resistant panel manufacturer.

B. Characteristics:
1. Limitations: Do not use in wet areas.
2. Description: Fiber-reinforced or glass mesh enhanced core gypsum board meeting ASTM C1396-09a; minimum Type X fire-resistance rated.
3. Thickness: 5/8".
4. Abrasion resistance: Surface abrasion depth shall be maximum 0.059" when tested in accord with ASTM D4977-03(2009); or achieve minimum Level 2 abrasion resistance when tested in accord with ASTM C1629-06.
5. Surface indentation: Surface indentation shall be maximum 0.100" when tested in accord with ASTM D5420-04; or achieve minimum Level 2 indentation resistance when tested in accord with ASTM C1629-06.
6. Soft body impact: Minimum 300 ft.-lbs. to failure for single drop when tested in accord with ASTM E695-03(2009); or achieve minimum Level 3 soft body impact resistance when tested in accord with ASTM C1629-06.

7. Hard body impact: Minimum 150 ft.-lbs. to failure and achieve minimum Level 3 hard body impact resistance when tested in accord with ASTM C1629-06.
8. Fire resistance: Noncombustible, minimum Type X, meeting UL minimum one-hour fire resistance, meeting ASTM E136-09b and ASTM E84-10b; flame spread rating of 15 maximum and smoke developed rating of 0.
9. Mold resistance: Resistant to mold growth when tested in accord with ASTM D3273-00(2005), score of 10.

2.4 SOUND CONTROL MATERIALS:

A. Contractor's option: Based on sound ratings and fire-resistance ratings required for assemblies, Contractor may select glass fiber or mineral wool sound attenuation materials as follows:
1. Glass fiber sound attenuation batts:
a. Acceptable manufacturers:
1) CertainTeed Corp.
2) Knauf Insulation.
3) Johns Manville Corp.
4) Owens-Corning Corp.
b. Characteristics:
1) Type: Unfaced fiberglass batts for friction fit between studs, complying with ASTM C665-06, Type 1.
2) Surface burning characteristics: Maximum 25 flame spread and 50 smoke development when tested in accord with ASTM E84-10b.
3) Assembly STC: As indicated on drawings.
4) Thickness: As indicated on drawings.
2. Mineral wool sound attenuation blankets:
a. Acceptable manufacturers:
1) IIG, MinWool, LLC, MinWool Sound Attenuation Fire Batts.
2) Owens-Corning Corp., Sound Attenuation Fire Batt.
3) U. S. Gypsum Co., Thermafiber SAFB (Sound Attenuation Fire Blankets). Owens-Corning Corp.

b. Characteristics:
1) Type: Paperless, semi-rigid mineral wool fiber blanket complying with ASTM C665-06, Type 1.
2) Density: Maximum 4.0 pcf for 1" thickness, and maximum 2.5 pcf. for greater thicknesses.
3) Surface burning characteristics: Maximum 15 flame spread and 5 smoke development when tested in accord with ASTM E84-10b.
4) Assembly STC: As indicated on drawings.
5) Thickness: As indicated on drawings.

B. Acoustical tape: Closed cell polyvinyl chloride foam tape, 1/4" thickness by 1" wide.

C. Acoustical Joint Sealant: Manufacturer's standard non-sag, paintable, non-staining latex sealant complying with ASTM C834-10. Product effectively reduces airborne sound transmission through perimeter joints and openings in building construction as demonstrated by testing representative assemblies according to ASTM E90-09.
Products: Subject to compliance with requirements, provide one of the following:
a. Accumetric LLC; BOSS 824 Acoustical Sound Sealant.
b. Grabber Construction Products; Acoustical Sealant GSC.
c. Pecora Corporation; AC-20 FTR and AIS-919.
d. Specified Technologies, Inc.; Smoke N Sound Acoustical Sealant.
e. USG Corporation; SHEETROCK Acoustical Sealant.
2. Acoustical joint sealant shall have a VOC content of 250 g/L or less when calculated according to 40 CFR 59, Subpart D (EPA Method 24).

2.5 FASTENERS:

A. Fasteners for metal framing, corrosion-resistant:
1. For fastening framing members to concrete and masonry surfaces: Fasteners shall be beaded drive pins or threaded studs driven by powder actuated tools. Fasteners shall resist design loads in accord with requirements of ASTM E1190-95(2007).
2. For fastening to metal decking and for fastening framing members together: Type S, pan head screws, in sizes recommended by gypsum board manufacturer for applications indicated.
3. Provide slotted, stand-off washers for slip joint attachments.

B. Screws for gypsum board and accessory application: Meeting ASTM C1002-07, corrosion-resistant.
1. For application of single layer or base layer of gypsum board to metal framing: 1", Type S, bugle head.
2. For application of face layer of gypsum board to metal framing in double layer construction: 1-5/8", Type S, bugle head.
3. For gypsum board to gypsum board application: 1-1/2", Type G, bugle head.

2.6 JOINT MATERIALS:

A. Standard gypsum board products:
1. Joint tape: Meeting ASTM C475-02(2007), perforated paper type.
2. Joint compound: Meeting ASTM C475-02(2007), ready-mixed tape embedment and topping compounds, vinyl-based.

B. Mold and moisture resistant paper faced gypsum board: Joint tape and joint compound shall be in accord with recommendations of board manufacturer’s product data.

2.7 SUSPENDED GYPSUM BOARD FURRING SYSTEM:

A. Acceptable manufacturers:
   1. Armstrong World Industries, Inc.
   2. Chicago Metallic Corp.
   3. USG Interiors, Inc.

B. Characteristics:
   1. Structural classification: Meeting ASTM C635-07, Heavy Duty.
   2. Components: Fabricated from minimum 0.018" base metal thickness, galvanized, cold-rolled steel; double web design.

2.8 ACCESSORIES:

A. Accessories shall comply with ASTM C1047-09 and shall be as follows.

B. Corner reinforcement: Galvanized steel with 1-1/4" wide fine expanded mesh flanges.

C. Metal jamb, ceiling and casing trim: Manufacturer's standard "L" and "U" shaped galvanized members with fine expanded mesh flanges; "mud-in" type for finishing with joint compound.

D. Control joints: Roll-formed galvanized steel.

E. Furring channels: Minimum 25 ga. galvanized steel, 1-3/8" face width by 7/8" and 1-1/2" deep, as indicated on drawings.

F. Resilient channel: Galvanized steel, manufacturer's standard type.

G. Furring brackets: Minimum 20 ga. galvanized steel, for attaching 3/4" furring channels to masonry walls.

H. Ceiling hangers: Minimum eight ga. galvanized annealed steel wire.

I. Tie wire: Minimum 18 ga. galvanized, annealed steel wire.

J. Special trim shapes:
   1. Acceptable manufacturers; subject to compliance with specified requirements:
      a. Fry Reglet Corp.
      b. Gordon, Inc.
      c. Pittcon Industries, Inc.
   2. Characteristics:
      a. Material: Manufacturer's standard aluminum alloy.
      b. Finish: Painted finish, color selected by Architect.
      c. Shapes: As indicated on drawings.

PART 3 - EXECUTION

3.1 FRAMING AND FURRING INSTALLATION:

A. Except where more stringent requirements are specified, install framing and furring in accord with ASTM C754-09a, Gypsum Association requirements and manufacturer's product data.

B. Runners:
1. Attach runner tracks at floor and underside of structural deck with specified fasteners. Provide slip joint attachments to meet deflection criteria and manufacturer's calculations at the following locations:
a. Tall partitions.
b. Full-height, floor-to-floor or floor-to-deck partitions.
c. All partitions subject to deflection.
2. Where partitions are indicated to stop at finish ceiling, attach to ceiling suspension system using 1/8" toggle bolts or sheet metal screws spaced at 1'-4" o. c., maximum, where partition aligns with ceiling grid. Where partition does not align with grid, attach at each intersection with grid.

C. Studs:
1. Position full length studs vertically, engaging floor and ceiling runners. Space studs as indicated on drawings.
2. Provide double studs at interior and exterior corners, expansion joints, partition termination and adjacent to door and borrowed lite openings in partitions. Locate next stud not more than 6" from double studs.
3. Secure abutting and intersecting walls with fasteners through stud flanges.
4. For horizontal reinforcement at door and borrowed lite frames, install cut-to-length runner sections with slit flanges secured to studs.
5. Install acoustical tape on metal studs which abut other studs or dissimilar surfaces in walls to receive sound attenuation blankets.

D. Furring:
1. Attach to masonry and concrete substrate with fasteners spaced at 2'-0" o. c. on alternating furring channel flange.
2. Position channels vertically, spaced at 2'-0" o. c., maximum.

E. At locations of stair handrails attached to metal-framed gypsum board partitions, provide minimum 20 ga. steel plate, set at handrail height and rise, for handrail bracket attachment. Attach to metal framing, full length of handrail.

3.2 SUSPENDED GYPSUM BOARD FURRING SYSTEM INSTALLATION:

A. Install suspension system in accord with ASTM C754-09a and fire-rated design assemblies indicated.

B. Seismic bracing: Comply with details and spacing indicated on drawings.

C. Hangers:

1. Space hangers at 4'-0" o. c., maximum, in each direction. Secure to building structure.
2. Install additional hangers at ends of each suspension member and at each corner of lighting fixtures.
3. Splay wires no more than 5" in 4'-0" vertical drop.
4. Wrap wire minimum of three times horizontally, turning ends upward.

D. Space main tees at 4'-0" o. c., perpendicular to structure. Space cross tees at 2'-0" o. c., perpendicular to main tees to form 2'-0" by 4'-0" grid system.

E. Level and square suspension system within specified tolerances.

F. Where grid system exists in an unrestrained condition, brace back to building structure using hanger wire, main tee or carrying channel braces spaced at 4'-0" o. c., maximum.

3.3 GENERAL BOARD APPLICATION:

A. Except where more stringent requirements are specified, install gypsum board in accord with ASTM C840-08, GA-216 and manufacturer’s product data.

B. Use gypsum board of maximum lengths to minimize end joints. Stagger end joints.

C. Abut gypsum boards without forcing. Fit ends and edges of board. Do not place butt ends against tapered edges.

D. Support ends and edges of gypsum board panels on framing or furring members, except for face layer of double layer work.

E. Install gypsum board accessories in accord with gypsum board manufacturer's product data and as follows:
1. Control joints: Install in walls and ceilings where indicated on drawings or in accord with requirements of ASTM C 840-08 and in specific locations approved by Architect for visual effect, if not indicated. Attach with staples to panel face. Where control joints occur in fire rated partitions, comply with code requirements and gypsum board manufacturer's product data.
2. Corner bead: Install at external corners.
3. Metal trim shapes: At exposed edge of gypsum board at door and window openings, at intersections with other materials and at intersection of walls with ceilings.
4. Install corner beads and metal trim shapes to framing system with mechanical anchors.

F. Install acoustical sealant at sound-rated partitions:
1. Seal partition perimeter with continuous 1/4" minimum round bead of acoustical sealant applied to each leg of runners, including those used at partition intersections with dissimilar wall construction.

2. Install gypsum board with 1/8" perimeter relief compressing sealant to form permanent airtight seal.
3. Where slip joint attachments are required at top of partition, fill resulting joint between drywall and adjacent structure with acoustical sealant to form permanent air tight seal.
4. Apply acoustical sealant around cutouts such as at electrical boxes, plumbing penetrations, medicine cabinets, heating ducts and cold air returns to form permanent airtight seal. (Sealant shall not be used as a fire stopping material.)

G. Install sound attenuation blankets at locations indicated on drawings. Comply with manufacturer's product data for installation. Attach flanges of blanket to web of stud and not to face of stud receiving gypsum board.

H. For fire-rated and acoustically rated construction, comply with requirements of tested assemblies scheduled on the drawings.

I. Continue required components of fire-rated and acoustically rated wall assembly to overhead structure. Apply joint tape and one coat of compound to gypsum board joints concealed from view in completed work.

J. Seal openings and penetrations in fire-rated construction as specified in Firestopping section.

K. Attach gypsum board to resilient channels with screws of length to not contact framing.

L. Allowable tolerances in framed gypsum board construction.
1. Position: ±1/4" maximum variation from design position.
2. Alignment: 1/8" in 8'-0"; 1/4" maximum in any continuous wall, line or surface.
3. Surface plane: 1/8" in 12'-0"; 1/16" in 1'-0", maximum variation in true surface plane.
4. Surface smoothness: No joint or fastener location, roughness or blemish discernible after application of finish when viewed at any angle from a distance of 5'-0" under occupancy lighting conditions, with surface preparation as specified in Painting and Coating section.

M. Allowable tolerances in suspended gypsum board furring system ceilings:
1. Deflection: Suspension system components, hangers and fastening devices supporting lighting fixtures, ceiling grilles and acoustical units shall have maximum deflection of 1/360 of span when tested in accord with ASTM C635-07.
2. Bow, camber and twist: Not exceeding tolerances established by ASTM C635-07.
3. Variation from level in finished ceiling: ±1/8" in 12'-0".
4. Variation in plane of adjacent gypsum board panels prior to joint treatment: 1/16".

3.4 SINGLE LAYER APPLICATION:

A. Ceilings: Apply gypsum board with long dimension at right angles to framing. Terminate edges of gypsum board running parallel to framing on framing members.

B. Walls:
1. Apply gypsum board vertically or horizontally at Contractor's option, except as required by gypsum board manufacturer's product data for system designs, including fire-rated and acoustically-rated partitions.
2. Stagger end joints in opposite sides of partitions.
3. Terminate edges of gypsum board running parallel to framing, furring on framing or furring members.

C. Fastening: Attach gypsum board using fasteners specified at spacings required by manufacturer's product data.

3.5 DOUBLE LAYER APPLICATION:

A. Base layer:
1. Ceilings: Apply base layer with long dimension at right angle to framing. Terminate edges of gypsum board running parallel to framing on framing members.
2. Walls: Apply base layer vertically. Terminate edges of gypsum board running parallel to framing, furring on framing or furring members. Stagger vertical joints on opposite sides of partitions.
3. Fastening: Attach gypsum board using fasteners specified, at spacings required by manufacturer's product data.

B. Face layer:
1. Apply face layer at right angle to base layer with minimum 10" offset in parallel base and face layer joints.
2. Fastening: Attach gypsum board using fasteners specified, at spacings required by manufacturer's product data.

3.6 JOINT TREATMENT:

A. Finish Levels shall be in accord with the “Recommended Specification: Levels of Gypsum Board Finish” as published jointly by the Gypsum Association, AWCI, CISCA and PDCA.

B. Finish Level 1; Joint treatment for non-public, non-service areas to receive no further finish, including storage areas: Apply joint compound to joints and angles in gypsum board and embed joint tape. Surfaces shall be free of excess joint compound; tool marks and ridges are acceptable.

C. Finish Level 2; Joint treatment for areas indicated to receive no further finish, including unfinished service areas, mechanical and electrical rooms, janitors

closets: Apply joint compound to joints, angles, fastener heads and accessories. Embed joint tape. Apply one additional coat of compound over tape. Apply one coat of compound to fastener depressions. Surfaces shall be free of excess joint compound; tool marks and ridges are acceptable.

D. Finish Level 3: Not used.

E. Finish Level 4; Joint treatment for areas indicated to receive flat, satin and eggshell paint finishes:
   1. Apply joint compound to joints, angles, fastener heads and accessories. Embed joint tape. Apply three additional coats of compound over tape, featheredging and sanding each coat.
   2. Apply minimum of three coats of compound to fastener depressions, sanding each coat and bringing to level plane with gypsum board surface.
   3. All joint compound shall be free of tool marks and ridges.

F. Finish Level 5: Not used.

G. Fastener pop: Drive new fastener approximately 1-1/2" from popped fastener and repair to match gypsum board finish.

H. Fill cracks with joint compound and sand smooth and flush.

I. Dust surfaces and leave ready for decoration. Joint and fastener treatment shall be indistinguishable in finished work.

END OF SECTION

SECTION 09511

SUSPENDED ACOUSTICAL CEILINGS

PART 1 - GENERAL

1.1 SUMMARY:

A. Related work specified elsewhere:
   1. Gypsum board.

1.2 SUBMITTALS:

A. Shop drawings; include the following:
   1. Layout, including locations of lighting fixtures and grilles.
   2. Insert and hanger spacing and fastening details.
   3. Splicing method for main and cross runners.
   4. Change in level details.
   5. Support requirements for lighting fixtures, grilles and similar items.

B. Product data: Include product descriptions and installation instructions for each material. Indicate load carrying capacity of suspension system hanger spacings and manufacturer's recommended methods for fixture support.

C. Samples; submit the following:
   1. 6" by 6" samples of each type and color acoustical material.
   2. Samples of each type and color suspension member and accessory.

1.3 QUALITY ASSURANCE:

A. Applicable standards; standards as referenced herein:
   1. American Iron and Steel Institute (AISI).
   2. ASTM International (ASTM).
   3. Ceiling & Interior Systems Contractors Association (CISCA).
   4. Underwriters Laboratories, Inc. (UL).

B. Obtain acoustical panels and supporting suspension system through one source from a single manufacturer. Each type of acoustical panel and painted grid shall be from a single production run.

C. Seismic performance: Comply with code requirements.

D. Job mock-up:
   1. Install complete ceiling of each type specified, in space designated by Architect. Notify Architect when spaces are ready for observation.
   2. Following Architect's acceptance, retain mock-up as a standard of quality for ceiling installation. Accepted mock-up may remain as part of finished work.

1.4 PROJECT/SITE CONDITIONS:

A. Sequencing and scheduling: Schedule acoustical material installation to minimize need for removal and replacement of acoustical units to accommodate work of other trades.

1.5 MAINTENANCE MATERIALS:

A. Furnish extra materials equal to one percent or one complete case, whichever is greater, of each type of acoustical material supplied.

B. Furnish suspension system components in amount sufficient to install extra ceiling units.

PART 2 - PRODUCTS

2.1 METAL SUSPENSION SYSTEMS, GENERAL:

A. Metal suspension system standard: Provide manufacturer's standard direct-hung metal suspension systems of types, structural classifications, and finishes indicated that comply with applicable requirements in ASTM C635-07.
   1. High humidity finish: Comply with ASTM C635-07 requirements for "Coating Classification for Severe Environment Performance" where high-humidity finishes are indicated.

B. Carrying channels: 16 ga. cold-rolled steel, 1-1/2" deep.

C. Attachment devices: Size for five times the design load indicated in ASTM C635-07, Table 1, "Direct Hung," unless otherwise indicated. Comply with seismic design requirements.
   1. Anchors in concrete: Anchors of type and material indicated below, with holes or loops for attaching hangers of type indicated and with capability to sustain, without failure, a load equal to five times that imposed by ceiling construction, as determined by testing according to ASTM E488-10 or ASTM E1512-01(2007) as applicable, conducted by a qualified testing and inspecting agency.
      a. Type: Cast-in-place, postinstalled expansion or postinstalled bonded anchors.
      b. Corrosion protection: Carbon-steel components zinc plated to comply with ASTM B633-07, Class Fe/Zn 5 (0.005 mm) for Class SC 1 service condition.
   2. Power-actuated fasteners in concrete: Fastener system of type suitable for application indicated, fabricated from corrosion-resistant materials, with clips or other accessory devices for attaching hangers of type indicated and with capability to sustain, without failure, a load equal to 10 times that imposed by ceiling construction, as determined by testing according to ASTM E1190-95(2007), conducted by a qualified testing and inspecting agency.

3. Hanger clips: Prefabricated metal clamps for fastening to building structure.

D. Wire hangers, braces, and ties: Provide wires complying with the following requirements:
1. Zinc-coated, carbon steel wire: ASTM A641-09a, Class 1 zinc coating, soft temper.
2. Size: Select wire diameter so its stress at three times hanger design load (ASTM C635-07, Table 1, "Direct Hung") will be less than yield stress of wire, but provide not less than 0.106-inch-diameter wire.

E. Seismic components: Provide as required by code:
1. Seismic stabilizer bars: Manufacturer's standard perimeter stabilizers designed to accommodate seismic forces.
2. Seismic struts: Manufacturer's standard compression struts designed to accommodate seismic forces.
3. Seismic clips: Manufacturer's standard seismic clips designed and spaced to secure acoustical panels in place.

F. Hold-down clips: Where indicated, provide suspension system manufacturer's standard hold-down clips compatible with ceiling panels specified; spaced 24 inches o.c. on all cross tees.

G. Special shapes:
1. Acceptable manufacturers; subject to compliance with specified requirements:
a. Fry Reglet Corp.
b. Gordon, Inc.
c. Pittcon Industries.
2. Characteristics: Aluminum acoustical moldings, shapes as indicated; white color.

2.2 STEEL SUSPENSION SYSTEMS:

A. Acceptable manufacturers; subject to compliance with specified requirements:
1. Armstrong World Industries, Inc.
2. CertainTeed Corp.
3. Chicago Metallic Corp.
4. USG Interiors, Inc.

B. Exposed steel grid system; 15/16" flange face.
1. Structural classification: Meeting ASTM C635-07, Intermediate Duty.
2. Module: 2'-0" by 2'-0".
3. Main and cross tees:
a. Tee material: Hot dip galvanized, cold-rolled steel.
b. Cap material: Hot dip galvanized, cold-rolled steel.
c. Design: Double web.
d. Tee size: 15/16" flange face width; 1-1/2" nominal height main tees.
1) 2'-0" or 4'-0" long cross tees for interior applications.

2) Material thicknesses shall be as required to meet specified structural classifications.

4. Edge molding: Minimum 0.020" thickness galvanized steel, channel or angle shaped, hemmed edges. Flange width shall be 3/4", except provide 2" flange width for projects in Seismic Design Categories D, E, and F.
5. Finish on exposed components: Chemically treated for paint adhesion with factory-applied, low-gloss white paint.

2.3 ACOUSTICAL CEILING PANELS:

A. Acceptable manufacturers; subject to compliance with specified requirements:
1. Basis of design: Armstrong World Industries, Inc., Ultima, #1910.
2. CertainTeed Corp.
3. USG Interiors, Inc.

B. Characteristics:
1. Size: 2'-0" by 2'-0".
2. Thickness: 3/4".
3. Edges: Square.
4. Finish: Factory-applied, washable paint.

2.4 ACCESSORIES:

A. Acoustical sealant:
1. Acoustical sealant for exposed and concealed joints: Manufacturer's standard nonsag, paintable, nonstaining latex sealant complying with ASTM C834-10 and effective in reducing airborne sound transmission through perimeter joints and openings in building construction as demonstrated by testing representative assemblies according to ASTM E90-04(2010).
2. Acoustical sealant for concealed joints: Manufacturer's standard nondrying, nonhardening, nonskinning, nonstaining, gunnable, synthetic-rubber sealant recommended for sealing interior concealed joints to reduce airborne sound transmission.

B. Sound attenuation blankets: 1-1/2" thickness, minimum 2-1/2 lb. density, paperless, semi-rigid, mineral fiber blanket.

C. T-Grid support clip:
1. Acceptable products:
a. Armstrong World Industries, Inc., Beam End Retainer Clip Item 7395.
b. Chicago Metallic corp., Perimeter clip 1499.
c. Erico Products, Inc., Caddy TGE T-Grid support clip.
d. USG Industries, Inc., Mac 2.
2. Characteristics: Mechanical clip for attaching acoustical “T” to edge molding without exposed fasteners in grid system.

PART 3 - EXECUTION

3.1 SUSPENSION SYSTEM INSTALLATION:

A. Install suspension system in accord with manufacturer's product data, ASTM C636-08, ASTM E580-10a and CISCA recommendations, except for more stringent requirements specified herein.

B. Layout:
1. Center grid system within areas to avoid panels of unequal widths at opposite walls and panels of less than 1/2 width.
2. Align grid members straight and perpendicular to walls.
3. Locate accessories, control joints and expansion joints before installing grid system.

C. Seismic requirements:
1. Comply with building code for seismic restraint requirements.
2. Install suspension systems in accord with ASTM E580-10a.
3. Seismic bracing: In addition to complying with ASTM C636-08 and ASTM E580-10a, install suspension systems in accord with CISCA 0-2 for Seismic Design Category C, CISCA 3-4 for Seismic Design Categories D, E, and F, and applicable building code requirements.

D. Hangers:
1. Space hangers for carrying channels or main tees at 4'-0" o. c. maximum. Secure to building structure.
2. Install additional hangers at ends of each suspension member, within 6" of end of member or wall.
3. Install additional hangers within 6" of each corner of lighting fixtures, grilles and similar items.
4. Splay wires no more than 5" in 2'-6" vertical drop.
5. Where spacing of hangers for main tees exceeds maximum specified spacing due to interference by adjacent construction, indirect-hang tees using carrying channels to maintain maximum hanger spacing.
6. Wrap wire minimum of three times horizontally, turning ends upwards.

E. Carrying channels: Saddle-tie carrying channels to main structure for indirect-hung suspension system.

F. Direct-hung, exposed grid system, 2'-0" by 2'-0" module:
1. Space main tees at 4'-0" o. c., maximum, perpendicular to structure.
2. Locate cross tees at 2'-0" o. c., perpendicular to main tees.
3. Space cross tees at 2'-0" o. c., perpendicular to previously installed cross tees, to form 2'-0" by 2'-0" grid module. Connect to cross tees through slots in main tees.

G. Level and square suspension system components within specified tolerances prior to beginning ceiling material installation.

H. Install cross tees adjacent to lighting fixtures and grilles on each side not supported by main tees. Support no fixtures on main or cross tees when fixture weight results in dead load exceeding deflection capacity of suspension system.

I. Where cut tees intersect other tees or edge moldings without mechanical attachment, attach components using T-Grid support clip. At contractor's option tees may be attached directly to partition with tie wire.

J. Wall moldings:
   1. Install wall molding at intersection of suspended ceiling and vertical surfaces.
   2. Miter corners where wall moldings intersect or install corner caps.
   3. Attach to vertical surfaces with mechanical fasteners.
   5. In each orthogonal horizontal direction, attach one end of ceiling grid to closure angle. The other end in each horizontal direction shall have 3/4" clearance from wall and shall rest upon and be free to slide on closure angle.

K. Where grid system exists in an unrestrained condition, brace back to building structure using hanger wire, main tee or carrying channel braces spaced at 4'-0" o. c., maximum.

3.2 ACOUSTICAL UNIT INSTALLATION:

A. Install acoustical units in level plane, in straight line courses, within specified tolerances.

B. Place acoustical materials to bear all around on suspension members.

C. Pattern shall be symmetrical about centerline of area, unless otherwise indicated. Lay out units having directional pattern in same direction.

D. Seal joints in acoustical units around pipes, ducts, and ducts and electrical outlets with acoustical sealant.

E. Where cutting of acoustical units is required, cut so that no cut or damaged edges are visible in finished work.

F. Hold-down clips: Install acoustical units surrounding recessed troffer lights with hold-down clips to prevent movement or displacement of units.

G. Lay sound attenuation blankets over ceilings in designated spaces.

H. Allowable tolerances:
   1. Deflection: Suspension system components, hangers and fastening devices supporting lighting fixtures, ceiling grilles and acoustical units shall have maximum deflection of 1/360 of the span when tested in accord with ASTM C635-07.

2. Bow, camber and twist: Not exceeding tolerances established by ASTM C635-07.
3. Variation from level in finished ceiling: ±1/8" in 12'-0".

3.3 CLEANING:

A. Clean soiled or discolored unit surfaces after installation.

B. Touch up scratches, abrasions, voids and other defects in painted metal surfaces.

C. Remove and replace damaged and stained acoustical units with new units.

END OF SECTION

SECTION 09650

RESILIENT FLOORING

PART 1 - GENERAL

1.1 SUBMITTALS:

A. Product data: Indicate product characteristics and installation requirements, including manufacturer's recommended adhesives and maintenance instructions.

B. Samples: Submit full size samples for each type color and pattern of flooring and accessory required.

1.2 QUALITY ASSURANCE:

A. Applicable standards, as referenced herein: ASTM International (ASTM).

B. Deliver resilient flooring and base products and installation adhesives to jobsite a minimum of 24 hours prior to use. Unroll base and allow to relax for 24 hours prior to using.

1.3 PROJECT/SITE CONDITIONS:

A. Environmental requirements:
   1. Maintain temperature in space to receive resilient materials at not less than 70°F. for not less than 24 hours before, during and for 48 hours after installation.
   2. Maintain minimum temperature of 55°F. after flooring is installed, except as specified above, for duration of project.

B. Protection: Protect finished flooring, base and accessories from staining, marring or other physical damage by work of other trades. Cover or mask surfaces as required.

1.4 MAINTENANCE MATERIAL:

A. Furnish additional floor tile of each color and pattern of tile as maintenance material. Furnish at the rate of one carton for each 1000 sq. ft. of floor surface or fraction thereof.

PART 2 - PRODUCTS

2.1 VINYL COMPOSITION TILE:

A. Acceptable manufacturers:
   1. Armstrong World Industries, Inc.
   2. Mannington Commercial.
   3. Tarkett, Inc.

B. Type: Mannington Commercial Solidpoint premium Tile Series, or similar of other acceptable manufacturers meeting ASTM F1066-04, Class 2 for through pattern tile.

C. Size: 1'-0" by 1'-0" face size by 1/8" thickness.

D. Colors: As selected by Architect from manufacturer's premium color range.

2.2 RUBBER BASE:

A. Acceptable manufacturers:
   1. Allstate.
   2. Burke Flooring, a Div. of Burke Industries.
   3. Roppe Corp.

B. Characteristics:
   1. Type: Minimum 48% rubber, 100% vulcanized; meeting ASTM F1861-08, Type TS Thermoset Vulcanized Rubber SBR.
   2. Length: Minimum 120'-0" rolls.
   3. Thickness: 1/8".
   4. Height: 4".
   5. Style: Coved.
   6. Colors: Colors: As selected by Architect from manufacturer's premium color range.

C. Corners: Preformed inside and outside corners. Preformed corners shall match base in color, sheen and overall appearance.

2.3 ACCESSORIES:

A. Acceptable manufacturers:
   1. Allstate.
   2. Burke Flooring Products, a Div. of Burke Industries.
   3. Roppe Corp.

B. Reducers:
   1. Material: Rubber.
   2. Thickness: Same as abutting floor materials.
   3. Width(s): 1".
   4. Edges: Tapered.

5. Colors: Colors: As selected by Architect from manufacturer's premium color range.

2.4 INSTALLATION MATERIALS:

A. Leveling compound; acceptable products:
   1. Custom Building Products, LevelQuik RS.
   2. Euclid Chemical Co., Super Flo-Top.
   3. Mapei, Ultraplan 1 Plus.

B. Adhesives: Water-resistant types and brands of solvent-free adhesive recommended by flooring material manufacturer's product data for installation conditions indicated.
   1. VOC Content: Comply with the following limits when calculated according to 40 CFR 59, Subpart D (EPA Method 24):
      a. VCT Adhesives: Not more than 50 g/L.
      b. Cove Base Adhesives: Not more than 50 g/L.

C. Wax and buffing compound: Types recommended by floor covering manufacturer for the particular type of flooring material.

PART 3 - EXECUTION

3.1 PREPARATION:

A. Prepare surfaces to receive resilient material in accord with flooring manufacturer's instructions.

B. Grind high areas and fill depressions with leveling compound where required to produce smooth installation and for proper alignment of resilient flooring with adjacent flooring materials.

C. Perform bond and moisture tests on subfloors in accord with ASTM F2170-09 and resilient flooring manufacturer's product data, to determine if surfaces are acceptable to receive specified resilient flooring products. Correct conditions detrimental to resilient flooring installation prior to starting installation.

D. Remove dirt, oil, grease or other foreign matter from surfaces to receive floor covering or accessories.

3.2 APPLICATION OF ADHESIVES:

A. Mix and apply adhesives in accord with resilient material manufacturer's product data. Apply with notched trowel or other tools as recommended by adhesive manufacturer.

B. Provide safety precautions during mixing and applications as recommended by adhesive manufacturer.

C. Apply adhesive to only that area which can be covered by resilient material within the recommended working time of the adhesive.
   1. Remove adhesive which dries or films over.
   2. Do not soil walls, bases or adjacent areas with adhesives.
   3. Remove spilled or misplaced materials.

3.3 TILE INSTALLATION:

A. Lay tile in accord with resilient tile manufacturer's product data.

B. Lay tile beginning at center of room or space, working toward perimeter.
   1. Adjust starting point as necessary to provide border tile widths equal to or greater than a half width tile.
   2. Joints between tile shall be fitted without gap; butted together.
   3. Cut border tile to fit within 1/32" of abutting surfaces.

C. Fit flooring material into breaks and recesses, against bases, around pipes and penetrations, under saddles or thresholds and around permanent cabinets and equipment, including under/inside h/c accessible cabinets.

D. Lay tile with grain or pattern running perpendicular (quarter turn) to adjacent tiles.

3.4 INSTALLATION OF BASE:

A. Workmanship:
   1. Unroll base material and allow to relax for 24 hours, minimum, prior to installation. Cut into lengths for minimum number of joints. Double-cut adjoining lengths.
   2. Install with tight butt joints with no joint widths greater than 1/64".

B. Top-set base:
   1. Apply adhesive and adhere to vertical surfaces.
   2. Press down so that bottom edge follows floor profile.
   3. Form internal corners using premolded corners.
   4. Form external corners using premolded corners.
   5. Scribe base to abutting materials.

3.5 ACCESSORY INSTALLATION:

A. Cut materials to lengths and sizes indicated.

B. Resilient reducers:
   1. Apply adhesives and bond to substrate.
   2. Center reducers in door openings.
   3. Fit edge to door frame jambs without visible gaps or cracks.
   4. Fit edges to abutting floor materials for flush fit.

3.6 CLEANING:

A. Upon completion of installation, clean surfaces using a neutral cleaner acceptable to material manufacturer.

B. Just prior to Date of Substantial Completion, buff no-wax floors using buffing compound for no-wax finish or apply two coats of non-slip wax to clean waxable floor surfaces and buff.

END OF SECTION

SECTION 09670

EPOXY FLOORING

PART 1 - GENERAL

1.1 SUMMARY:

A. Work of this section includes a four-component, environmentally friendly, troweled epoxy mortar system utilizing 30-percent recycled glass and rapidly renewable additives.

1.2 REFERENCES:

A. ASTM International (ASTM):
1. C307 Standard Test Method for Tensile Strength of Chemical-Resistant Mortar, Grouts, and Monolithic Surfacings.
2. C413 Standard Test Method for Absorption of Chemical-Resistant Mortars, Grouts, Monolithic Surfacings, and Polymer Concretes.
3. C531 Standard Test Method for Linear Shrinkage and Coefficient of Thermal Expansion of Chemical-Resistant Mortars, Grouts, Monolithic Surfacings, and Polymer Concretes.
4. C579 Standard Test Methods for Compressive Strength of Chemical-Resistant Mortars, Grouts, Monolithic Surfacings, and Polymer Concretes.
5. C580 Standard Test Method for Flexural Strength and Modulus of Elasticity of Chemical-Resistant Mortars, Grouts, Monolithic Surfacings, and Polymer Concretes.
6. C811 Standard Practice for Surface Preparation of Concrete for Application of Chemical-Resistant Resin Monolithic Surfacings.
7. D2240 Standard Test Method for Rubber Property—Durometer Hardness.
8. D2369 Standard Test Method for Volatile Content of Coatings.
9. D2794 Standard Test Method for Resistance of Organic Coatings to the Effects of Rapid Deformation (Impact).
10. E648 Standard Test Method for Critical Radiant Flux of Floor-Covering Systems Using a Radiant Heat Energy Source.
11. F1679 Standard Test Method for Using A Variable Incidence Tribometer (VIT).
12. F1869 Standard Test Method for Measuring Moisture Vapor Emission Rate of Concrete Subfloor Using Anhydrous Calcium Chloride.
13. F2170 Standard Test Method for Determining Relative Humidity in Concrete Floor Slabs Using in situ Probes.

1.3 SUBMITTALS:

A. Product data: For each type of product indicated. Include manufacturer's technical data, application instructions, and recommendations for each resinous flooring component required.

B. Samples for verification: For each resinous flooring system required, 6-inch square, applied to a rigid backing by Installer for this Project.

C. Installer certificates: Signed by manufacturer certifying that installers comply with specified requirements.

D. Maintenance data: For resinous flooring to include in maintenance manuals.

1.4 QUALITY CONTROL:

A. Installer qualifications: Engage an experienced installer (applicator) who is experienced in applying resinous flooring systems similar in material, design, and extent to those indicated for this Project, whose work has resulted in applications with a record of successful in-service performance, and who is acceptable to resinous flooring manufacturer.
   1. Engage an installer who is certified in writing by resinous flooring manufacturer as qualified to apply resinous flooring systems indicated.
   2. Installer shall have completed at least 10 projects of similar size and complexity.

B. Source limitations: Obtain primary resinous flooring materials, including primers, resins, hardening agents, grouting coats, and topcoats, through one source from a single manufacturer, with not less than ten years of successful experience in manufacturing and installing principal materials described in this section. Provide secondary materials, including patching and fill material, joint sealant, and repair materials, of type and from source recommended by manufacturer of primary materials.

C. Manufacturer field technical service representatives: Resinous flooring manufacture shall retain the services of Field Technical Service Representatives who are trained specifically on installing the system to be used on the project. Field Technical Services Representatives shall assist in the quality control and quality control process of the installation and shall be available to perform field problem solving issues with the installer.

D. Mockups: Apply mockups to verify selections made under sample submittals and to demonstrate aesthetic effects and set quality standards for materials and execution.
   1. Apply full-thickness mockups on 48-inch square floor area selected by Architect.
   2. Include 48-inch length of integral cove base.
   3. Approved mockups may become part of the completed Work if undisturbed at time of Substantial Completion.

E. Pre-installation conference:
   1. General contractor shall arrange a meeting not less than thirty days prior to starting work.
   2. Attendance:
      a. General Contractor
      b. Architect.
      c. Manufacturer/Installer's Representative.

1.5 DELIVERY, STORAGE AND HANDLING:

A. Deliver materials in original packages and containers, with seals unbroken, bearing manufacturer's labels indicating brand name and directions for storage and mixing with other components.

B. Store materials to prevent deterioration from moisture, heat, cold, direct sunlight, or other detrimental effects.

C. All materials used shall be factory pre-weighed and pre-packaged in single, easy to manage batches to eliminate on site mixing errors. No on site weighing or volumetric measurements allowed.

1.6 JOB-SITE CONDITIONS:

A. Environmental limitations: Comply with resinous flooring manufacturer's written instructions for substrate temperature, ambient temperature, moisture, ventilation, and other conditions affecting resinous flooring application.

B. Maintain material and substrate temperature between 65- and 85-degrees F (18- and 30-degrees C) during resinous flooring application and for not less than 24 hours after application.

C. Lighting: Provide permanent lighting or, if permanent lighting is not in place, simulate permanent lighting conditions during resinous flooring application.

D. Close spaces to traffic during resinous flooring application and for not less than 24 hours after application, unless manufacturer recommends a longer period.

E. Concrete substrate shall be properly cured for a minimum of 30 days. A vapor barrier must be present for concrete subfloors on or below grade. Otherwise, an osmotic pressure resistant grout must be installed prior to the resinous flooring

1.7 WARRANTY:

A. Installer and flooring manufacturer shall jointly warranty flooring material and application for a period of 3 years, for its normal and intended use; should flooring need repair or replacement, Owner will incur no cost for repair or replacement. Warranty shall begin on Date of Substantial Completion.

PART 2 - PRODUCTS

2.1 MANUFACTURERS:

A. Acceptable manufacturers:
1. Basis of design: Stonhard, Inc.; Stonclad GR with Stonkote GS4
2. Dexotex, Div. of Crossfield Products Corp.
3. General Polymers Corp.
4. Selby, Div. of Degussa Building Systems.
5. Tnemec Co., Inc.

B. Build up of broadcast or liquid rich (slurry) type systems will not be accepted.

2.2 EPOXY FLOORING SYSTEM:

A. System Characteristics:
1. Color and pattern: Custom to match Architect's sample.
2. S Texture #2. Field verify.
3. Integral cove base: 4".
4. Overall system thickness: Nominal 1/4".

B. Physical properties:
1. Flammability: ASTM E648-10, Class I.
2. Hardness: 85-90 when tested in accordance with ASTM D2240-05, Shore D.
3. Water absorption: ASTM C413-01(2006), 0.2-percent.
4. Abrasion resistance: ASTM D2794-93(2004), 0.1 grams per minute maximum weight loss.
5. Impact resistance: ASTM D2794-93(2004), > 160 inches/pounds
6. Compressive strength: 10,000 minimum when tested after 7 days in accord with ASTM C579-01(2006).
7. Tensile strength: 1,750 pounds per square inch minimum when tested in accord with ASTM C307-03(2008).
8. Flexural strength: 4,000 pounds per square inch minimum when tested in accord with ASTM C580-02(2008).
9. Coefficient of friction (Dry): 0.83 when tested in accord with ASTM F1679-2006.

10. Slip resistance index (Wet): 0.66 when tested in accord with ASTM F1679-2006.
11. Thermal coefficient of expansion: 15 x 10-to-the- (-6) when tested in accord with ASTM C531-00(2005), in/in/degree C.
12. Flexural modulus of elasticity: 2.0 x 10-to-the- (-6) when tested in accord with ASTM C580-02(2008).
13. Heat resistance limitation: 140-degrees F/ 60-degrees C (continuous exposure) 200-degrees F/ 93-degrees C (intermittent spills).
14. Cure rate: 24hours for normal operations.
15. VOC content: 0 grams per liter per ASTM D2369-07.

C. System components: Manufacturer's standard components that are compatible with each other and as follows:
   1. Body coat(s):
      a. Resin: Epoxy.
      b. Formulation description: 100 percent solids.
   2. Application method: Metal trowel.
      a. Thickness of coats: 3/16" to 1/4".
      b. Number of coats: One.
   3. Aggregates: Containing 30-percent recycled glass and rapidly renewable additives.
   4. Topcoat: Stonkote GS4, general service sealing.
      a. Resin: Epoxy.
      b. Formulation description: 100 percent high solids.
      c. Type: Pigmented.
      d. Finish: Texture 2, unless noted otherwise.
      e. Number of coats: One.

2.3 ACCESSORY MATERIALS:

A. Primer: Type recommended by manufacturer for substrate and body coats indicated.
   a. Basis of design for formulation description: Stonhard Standard Primer, 100 percent solids.

B. Waterproofing membrane: Type recommended by manufacturer for substrate and primer and body coats indicated.
   a. Basis of design; only if application above grade: Stonproof ME7.

C. Patching and fill material: Resinous product of or approved by resinous flooring manufacturer and recommended by manufacturer for application indicated. Resinous based materials only. Cementitious or single component products not accepted.

D. Joint sealant: Type recommended or produced by resinous flooring manufacturer for type of service and joint condition indicated.

E. Divider strips: As indicated on drawings.

F. Base-bead strips for exposed top edge of terrazzo base: Match divider-strip material, and color unless otherwise indicated.
   1. Type: 1/8" metal cove strip.

PART 3 - EXECUTION

3.1 PREPARATION:

A. General: Prepare and clean substrates according to resinous flooring manufacturer's written instructions for substrate indicated. Provide clean, dry, and neutral Ph substrate for resinous flooring application.

B. Concrete substrates: Provide sound concrete surfaces free of laitance, glaze, efflorescence, curing compounds, form-release agents, dust, dirt, grease, oil, and other contaminants incompatible with resinous flooring.
   1. Mechanically prepare substrates as follows:
      a. Shot-blast surfaces with an apparatus that abrades the concrete surface, contains the dispensed shot within the apparatus, and recirculates the shot by vacuum pickup.
      b. Comply with ASTM C811-99(2008) requirements, unless manufacturer's product data is more stringent.
   2. Repair damaged and deteriorated concrete according to resinous flooring manufacturer's product data.

C. Verify that concrete substrates are dry.
   1. Perform in situ probe test, ASTM F 2170-02. Proceed with application only after substrates do not exceed a maximum potential equilibrium relative humidity of 85 percent.
   2. Perform anhydrous calcium chloride test, ASTM F1869-10. Proceed with application only after substrates have maximum moisture-vapor-emission rate of 5-pounds of water/1000 square feet of slab in 24 hours.
   3. Perform additional moisture tests recommended by manufacturer. Proceed with application only after substrates pass testing.
   4. Verify that concrete substrates have neutral Ph and that resinous flooring will adhere to them. Perform tests recommended by manufacturer. Proceed with application only after substrates pass testing.

D. Resinous materials: Mix components and prepare materials according to resinous flooring manufacturer's product data.

E. Use patching and fill material to fill holes and depressions in substrates according to manufacturer's product data.

F. Treat control joints and other nonmoving substrate cracks to prevent cracks from reflecting through resinous flooring according to manufacturer's written recommendations.
   1. Basis of design: Stonflex MP7 joint fill material, and or Stonproof CT5 concrete crack treatment.

3.2 APPLICATION:

A. General: Apply components of resinous flooring system according to manufacturer's product data to produce a uniform, monolithic wearing surface of thickness indicated.
   1. Coordinate application of components to provide optimum adhesion of resinous flooring system to substrate, and optimum intercoat adhesion.
   2. Cure resinous flooring components according to manufacturer's written instructions. Prevent contamination during application and curing processes.
   3. At substrate expansion and isolation joints, provide joint in resinous flooring to comply with resinous flooring manufacturer's product data.
      a. Apply joint sealant to comply with manufacturer's product data.
   4. Install divider strips and metal cove strips in accord with manufacturers' product data.

B. Apply primer where required by resinous system, over prepared substrate at spreading rate recommended by manufacturer's product data.

C. Integral cove base: Stonclad GS mortar, apply cove base mix to wall surfaces before applying flooring. Apply in accord with manufacturer's product data and details including those for taping, mixing, priming, troweling, sanding, and topcoating of cove base. Round internal and external corners.
   1. Integral cove base: 4" high.

D. Apply metal trowel single mortar coat in thickness indicated for flooring system. Hand or power trowel and grout to fill voids. When cured, sand to remove trowel marks and roughness.

E. Apply topcoat(s) in number of coats indicated for flooring system and at spreading rates recommended by manufacturer's product data.

3.3 FIELD QUALITY CONTROL:

A. Material sampling: Owner may at any time, and for any number of times during resinous flooring application, require material samples for testing for compliance with requirements.
   1. Owner will engage an independent testing agency to take samples of materials being used. Material samples will be taken, identified, sealed, and certified in presence of Contractor.
   2. Testing agency will test samples for compliance with requirements, using applicable referenced testing procedures or, if not referenced, using testing procedures listed in manufacturer's product data.
   3. If test results show applied materials do not comply with specified requirements, Contractor shall pay for testing, remove noncomplying materials, prepare surfaces coated with unacceptable materials, and reapply flooring materials to comply with requirements.

3.4 CLEANING, PROTECTING, AND CURING:

A. Cure resinous flooring materials in compliance with manufacturer's directions, taking care to prevent contamination during stages of application and prior to completion of curing process. Close area of application for a minimum of 18 hours or as instructed by the manufacturer, whichever is greater.

B. Protect resinous flooring materials from damage and wear during construction operation. Where temporary covering is required for this purpose, comply with manufacturer's recommendations for protective materials and method of application. General Contractor is responsible for protection and cleaning of surfaces after final coats.

C. Cleaning: Remove temporary covering and clean resinous flooring just prior to final inspection. Use cleaning materials and procedures recommended by resinous flooring manufacturer.

END OF SECTION

SECTION 09900

COATING SYSTEMS

PART 1--GENERAL

1.01 DESCRIPTION

A. SCOPE:

This Section 09900 specifies coating systems, surface preparations, and application requirements for coating systems.

B. DEFINITIONS:

Specific coating terminology used in this Section 09900 is in accordance with definitions contained in ASTM D16, ASTM D3960, and the following definitions:

1. Abrasive: Material used for blast cleaning, such as sand, grit or shot.

2. Abrasive Blast Cleaning: Cleaning/surface preparation by abrasive propelled at high speed.

3. Anchor Pattern: Profile or texture of prepared surface(s).

4. ANSI: American National Standards Institute.

5. Bug Holes: Small cavities, usually not exceeding 15 mm in diameter, resulting from entrapment of air bubbles in the surface of formed concrete during placement and compaction.

6. Coating/Paint/Lining Thickness: The total thickness of primer, intermediate and/or finish coats.

7. Coating System Applicator (CSA): A generic reference to the specialty subcontractor or subcontractors retained by the Contractor to install the coating systems specified in this Section 09900.

8. Coating System Manufacturer (CSM): Refers to the acceptable coating system manufacturer, abbreviated as the CSM.

9. Coating System Manufacturer's Technical Representative(s) (CTR): Refers to the technical representative(s) of the acceptable Coating System Manufacturer and is abbreviated as CTR.

10. Dew point: Temperature of a given air/water vapor mixture at which condensation starts.

11. Dry Film Thickness (DFT): Depth of cured film, usually expressed in mils

(0.001 inch). Use this definition as opposed to existing definition.

12. Drying Time: Time interval between application and curing of material.

13. Dry to Recoat: Time interval between application of material and ability to receive next coat.

14. Dry to Touch: Time interval between application of material and ability to touch lightly without damage.

15. Feather Edging: Reducing the thickness of the edge of paint.

16. Feathering: Operation of tapering off the edge of a point with a comparatively dry brush.

17. Field Coat: The application or the completion of application of the coating system after installation of the surface at the site of the work.

18. Hold Point: A defined point, specified in this Section 09900, at which work shall be halted for inspection.

19. Holiday: a discontinuity, skip, or void in coating or coating system film that exposes the substrate.

20. Honeycomb: Segregated condition of hardened concrete due to non-consolidation.

21. ICRI: International Concrete Repair Institute.

22. Incompatibility: Inability of a coating to perform well over another coating because of bleeding, poor bonding, or lifting of old coating; inability of a coating to perform well on a substrate.

23. Laitance: A layer of weak, non-durable concrete containing cement fines that is brought to the surface through bleed water because of concrete finishing and/or over-finishing.

24. Mil: 0.001 inch.

25. NACE: National Association of Corrosion Engineers.

26. Overspray: Dry spray, particularly such paint that failed to strike the intended surface.

27. Pinhole: A small diameter discontinuity in a coating or coating system film that is typically created by outgassing of air from a void in a concrete substrate resulting in exposure of the substrate or a void between coats.

28. Pot Life: Time interval after mixing of components during which the coating can be satisfactorily applied.

29. Resurfacer/Resurfacing Material: A layer of cementitious and/or resin-base material used to fill or otherwise restore surface continuity to worn or damaged concrete surfaces.

30. Shelf Life: Maximum storage time for which a material may be stored without losing its usefulness.

31. Shop Coat: One or more coats applied in a shop or plant prior to shipment to the site of the work, where the field or finishing coat is applied.

32. Spreading Rate: Area covered by a unit volume of paint at a specific thickness.

33. SSPC: The Society for Protective Coatings.

34. Stripe Coat: A separate coat of paint applied to all weld seems, pits, nuts/bolts/washers and edges by brush. This coat shall not be applied until any previous coat(s) have cured and, once applied, shall be allowed to cure prior to the application of the subsequent coat(s).

35. Surface Saturated Dry (SSD): Refers to concrete surface condition where the surface is saturated (damp) without the presence of standing water.

36. Tie Coat: An intermediate coat used to bond different types of paint coats. Coatings used to improve the adhesion of a succeeding coat.

37. Touch-Up Painting: The application of paint on areas of painted surfaces to repair marks, scratches, and areas where the coating has deteriorated to restore the coating film to an unbroken condition.

38. TPC: Technical Practice Committee.

39. Volatile Organic Compound (VOC) Content: The portion of the coating that is a compound of carbon, is photochemically reactive, and evaporates during drying or curing, expressed in grams per liter (g/l) or pounds per gallon (lb/gal).

40. Immersion: Refers to a service condition in which the substrate is below the waterline or submerged in water or wastewater at least intermittently if not constantly.

41. Weld Splatter: Beads of metal scattered near seam during welding.

42. Wet Film Thickness (WFT): The primer or coating film's thickness immediately following application. Wet film thickness is measured in mils or thousandths of an inch (0.001 inch) and is abbreviated WFT.

1.02 QUALITY ASSURANCE

A. REFERENCES:

This section contains references to the following documents. They are a part of this section as specified and modified. Where a referenced document contains references to other standards, those documents are included as references under this section as if referenced directly. In the event of conflict between the requirements of this section and those of the listed documents, the requirements of this section shall prevail.

Unless otherwise specified, references to documents shall mean the documents in effect at the time of Advertisement for Bids or Invitation to Bid (or on the effective date of the Agreement if there were no Bids). If referenced documents have been discontinued by the issuing organization, references to those documents shall mean the replacement documents issued or otherwise identified by that organization or, if there are no replacement documents, the last version of the document before it was discontinued. Where document dates are given in the following listing, references to those documents shall mean the specific document version associated with that date, regardless of whether the document has been superseded by a version with a later date, discontinued, or replaced.

	Reference		Title
1.	ANSI/ASC 29.4	3.	Abrasive Blasting Operations – Ventilation and Safe Practice
2.	Exhaust Systems		
4.	ANSI/NSF 61	5.	Drinking Water System Components Health Effects
6.	ANSI B74.18	7.	Grading of Certain Abrasive Grain on Coated Abrasive Material
8.	ASTM D16	9.	Standard Terminology for Paint, Related Coatings, Materials, and Applications
10.	ASTM D2200 (SSPC-VIS1)	11.	Pictorial Surface Preparation Standards for Painting Steel Surfaces
12.	ASTM D3960	13.	Standard Practice for Determining Volatile Organic Compound (VOC) Content of Paints and Related Coatings
14.	ASTM D4262	15.	Standard Test Method for pH of Chemically Cleaned or Etched Concrete Surfaces
16.	ASTM D4263	17.	Standard Test Method for Indicating Moisture in Concrete by the Plastic Sheet Method
18.	ASTM D4414	19.	Standard Practice for Measurement of Wet Film Thickness by Notch Gages
20.	ASTM D4417	21.	Standard Test Methods for Field Measurement of Surface Profile of Blast Cleaned Steel
22.	ASTM D4541	23.	Standard Test Methods for Pull-Off Strength of Coatings On Metal Substrates Using Portable Adhesion Testers
24.	ASTM D4787	25.	Standard Practice for Continuity Verification of Liquid or Sheet Linings Applied to Concrete Substrates

Reference		Title
26.	ASTM D5162	27. Standard Practice for Discontinuity (Holiday) Testing of Nonconductive Protective Coating on Metallic Substrates
26.	ASTM D7234	27. Standard Test Method for Pull-Off Adhesion Strength of Coatings on Concrete Using Portable Adhesion Testers
28.	ASTM E337	29. Standard Test Method for Measuring Humidity With a Psychrometer
30.	ASTM F1869	31. Standard Test Method for Measuring Moisture Vapor Emission Rate of Concrete Subfloor Using Anhydrous Calcium Chloride
32.	FS 595b	33. Federal Standard Colors
34.	ICRI 03732	35. Guideline for Selecting and Specifying Concrete Surface Preparation for Sealers, Coatings, and Polymer Overlays
36.	NACE Publication 6D-163	37. A Manual for Painter Safety
38.	NACE Publication 6F-163	39. Surface Preparation of Steel or Concrete Tank/Interiors
40.	NACE Publication 6G-164 A	41. Surface Preparation Abrasives for Industrial Maintenance Painting
42.	NACE Standards	43. January 1988 Edition of the National Association of Corrosion Engineers, TPC
44.	NACE Standard RP0188	45. Standard Recommended Practice – Discontinuity (Holiday) Testing of New Protective Coatings on Conductive Substrates
46.	NACE Standard RP0288	47. Standard Recommended Practice, Inspection of Linings on Steel and Concrete
48.	NACE Standard RP0892	49. Standard Recommended Practice, Linings Over Concrete in Immersion Service
50.	NACE Publication TPC2	51. Coatings and Linings for Immersion Service
52.	NAPF 500-03	53. Surface Preparation Standard for Ductile Iron Pipe and Fittings in Exposed Locations Receiving Special External Coatings and/or Special Internal Linings
54.	NAPF 500-03-04	55. Abrasive Blast Cleaning for Ductile Iron Pipe
56.	NAPF 500-03-05	57. Abrasive Blast Cleaning for Cast Ductile Iron Fittings
58.	OSHA 1910.144	59. Safety Color Code for Marking Physical Hazards
60.	OSHA 1915.35	61. Standards – 29CFR - Painting
62.	SSPC	63. Paint Application Specification No. 1
64.	SSPC-AB 1	65. Mineral and Slag Abrasives

Reference		Title	
66.	SSPC-PA 1	67.	Shop, Field, and Maintenance Painting of Steel
68.	SSPC-PA 2	69.	Measurement of Dry Coating Thickness with Magnetic Gages
70.	SSPC-PA 9	71.	Measurement of Dry Coating Thickness on Cementitious Substrates Using Ultrasonic Gages
72.	SSPC-PA Guide 1	73.	Guide for Illumination of Industrial Painting Project
74.	SSPC-PA Guide 3	75.	A Guide to Safety in Paint Application
76.	SSPC-PA Guide 6	77.	Guide for Containing Debris Generated During Paint Removal Operations
78.	SSPC-PA Guide 11	79.	Guide for Coating Concrete
80.	SSPC SP1	81.	Solvent Cleaning
82.	SSPC SP2	83.	Hand Tool Cleaning
84.	SSPC SP3	85.	Power Tool Cleaning
86.	SSPC SP5	87.	White Metal Blast Cleaning
88.	SSPC SP6	89.	Commercial Blast Cleaning
90.	SSPC SP7	91.	Brush-Off Blast Cleaning
92.	SSPC SP10	93.	Near-White Blast Cleaning
94.	SSPC SP11	95.	Power Tool Cleaning to Bare Metal
96.	SSPC SP12	97.	Surface Preparation and Cleaning of Steel and Other Hard Materials by High and Ultra-High Pressure Water Jetting Prior to Recoating
98.	SSPC SP13	99.	Surface Preparation of Concrete
100.	SSPC-TR2	101.	Wet Abrasive Blast Cleaning
102.	SSPC-TU-3	103.	Overcoating
104.	SSPC-TU-4	105.	Field Methods for Retrieval and Analysis of Soluble Salts on Substrates
106.	SSPC V2	107.	Systems and Specifications: Steel Structures Painting Manual, Volume 2
108.	SSPC-VIS 1	109.	Visual Standard for Abrasive Blast Cleaned Steel
110.	SSPC-VIS 3	111.	Visual Standard for Power and Hand – Tool Cleaned Steel
112.	SSPC-VIS 4	113.	Visual Standards (Waterjetting)
114.	SSPC-VIS 5	115.	Visual Standards (Wet Abrasive Blast Cleaning)
116.	WPCF Manual of Practice No. 17	117.	Paints and Protective Coatings for Wastewater Treatment Facilities. Guide and Paint Application Specifications.

B. STANDARDIZATION:

Materials and supplies provided shall be the standard products of CSMs. Materials in each coating system shall be the products of a single CSM.

The standard products of CSMs other than those specified may be acceptable when it is demonstrated to the Construction Manager that they are equal in composition, durability, usefulness, and convenience for the purpose intended. Requests for consideration of CSMs other than those specified in this Section 09900 will be considered, provided the following minimum conditions are met. Such requests are not a substitution for submittals after the alternative CSMs have been considered and accepted.

1. The proposed coating system shall use an equal or greater number of separate coats to achieve the required total dry film thickness.

2 The proposed coating system shall use coatings of the same generic type as that specified including curing agent type.

3. Requests for consideration of products from CSMs other than those specified in this Section 09900 shall include information listed in paragraph 09900-1.04, Items 1, 2, and 3, demonstrating that the proposed CSM's product is equal to the specified coating system.

4. The Contractor and the proposed alternative CSM shall provide a list of references for the proposed product where the coating of the same generic type has been applied. The reference list shall include the project name, city, state, owner, phone number of owner; coating system reference and number from this Section 09900; type of facility in which it was used, generic type, and year coating was applied.

C. QUALITY CONTROL REQUIREMENTS:

1. The Contractor is responsible for the workmanship and quality of the coating system installation. Inspections by the Construction Manager or the CTR will not relieve or limit the Contractor's responsibilities.

2. The Contractor's methods shall conform to requirements of this specification and the standards referenced in this Section 09900. Changes in the coating system installation requirements will be allowed only with the written acceptance of the Construction Manager before work commences.

3. Only personnel who are trained by the CTR specifically for this contract or who are approved by the CSM specifically for this contract shall be allowed to perform the coating system installation specified in this Section 09900.

4. Contaminated, outdated, diluted materials, and/or materials from previously opened containers shall not be used.

5. For repairs, the Contractor shall provide the same products, or products recommended by the CSM, as used for the original coating.

6. The Contractor shall identify the points of access for inspection by the

Owner or the Construction Manager. The Contractor shall provide ventilation, ingress and egress, and other means necessary for the Construction Manager's personnel to access safely the work areas.

7. The Contractor shall conduct the work so that the coating system is installed as specified and shall inspect the work continually to ensure that the coating system is installed as specified. Coating system work that does not conform to the specifications or is otherwise not acceptable shall be corrected as specified.

8. The Contractor shall complete the Coating System Inspection Checklist, Form 09900-A, included in Section 01999, for coating system installations. Follow the sequential steps required for proper coating system installation as specified and as listed in the Coating System Inspection Checklist. For each portion of the work, install the coating system and complete sign-offs as specified prior to proceeding with the next step. After completing each step as indicated on the Coating System Inspection Checklist, the Contractor shall sign the checklist indicating that the work has been installed and inspected as specified.
9. The Contractor shall provide written daily reports that present, in summary form, test data, work progress, surfaces covered, ambient conditions, quality control inspection test findings, and other information pertinent to the coating system installation.

D. INSPECTION AT HOLD POINTS:

The Contractor shall conduct inspections at Hold Points during the coating system installation and record the results from those inspections on Form 09900-A. The Contractor shall coordinate such Hold Points with the Construction Manager such that the Construction Manager may observe Contractor's inspections on a scheduled basis. The Contractor shall provide the Construction Manager a minimum of two (2) hours of notice prior to conducting Hold Point Inspections. The Hold Points shall be as follows:

1. Environment and Site Conditions. Prior to commencing an activity associated with coating system installation, the Contractor shall measure, record, and confirm acceptability of ambient air temperature and humidity as well as other conditions such as proper protective measures for surfaces not to be coated and safety requirements for personnel. The acceptability of the weather and/or environmental conditions within the structure shall be determined by the requirements specified by the CSM of the coating system being used.

2. Conditions Prior to Surface Preparation. Prior to commencing surface preparation, the Contractor shall observe, record, and confirm that oil, grease, and/or soluble salts have been eliminated from the surface.

3. Monitoring of Surface Preparation. Spot checking of degree of cleanliness, surface profile, and surface pH testing, where applicable. In addition, the compressed air used for surface preparation or blow down cleaning shall be checked to confirm it is free from oil and moisture.

4. Post Surface Preparation. Upon completion of the surface preparation, the Contractor shall measure and inspect for proper degree of cleanliness and surface profile as specified in this Section 09900 and in the CSM's written instructions.

5. Monitoring of Coatings Application. The Contractor shall inspect, measure, and record the wet film thickness and general film quality (visual inspection) for lack of runs, sags, pinholes, holidays, etc. as the application work proceeds.

6. Post Application Inspection. The Contractor shall identify defects in application work including pinholes, holidays, excessive runs or sags, inadequate or excessive film thickness and other problems as may be observed.

7. Post Cure Evaluation. The Contractor shall measure and inspect the overall dry film thickness. The Contractor shall conduct a DFT survey, as well as perform adhesion testing, holiday detection, or cure testing as required based on the type of project and the specific requirements in this Section 09900 and/or in the CSM's written instructions.

8. Follow-up to Corrective Actions and Final Inspection. The Contractor shall measure and reinspect corrective coating work performed to repair defects identified at prior Hold Points. This activity also includes final visual inspection along with follow-up tests such as holiday detection, adhesion tests, and DFT surveys.

1.03 DELIVERY AND STORAGE

Materials shall be delivered to the job site in their original, unopened containers. Each container shall be properly labeled. Materials shall be handled and stored to prevent damage to or loss of label.

Labels on material containers shall show the following information:

1. Name or title of product.
2. CSM's batch number.
3. CSM's name.
4. Generic type of material.
5. Application and mixing instructions.
6. Hazardous material identification label.
7. Shelf life expiration date.

Materials shall be stored in enclosed structures and shall be protected from weather and excessive heat or cold in accordance with the CSM's recommendations. Flammable materials shall be stored in accordance with state and local requirements.

Containers shall be clearly marked indicating personnel safety hazards associated with the use of or exposure to the materials.

Material Safety Data Sheets (MSDS) for each material shall be provided to the Construction Manager.

The Contractor shall store and dispose of hazardous waste according to federal, state and local requirements. This requirement specifically addresses waste solvents and coatings.

1.04 SUBMITTALS

Provide in accordance with Section 01300:

1. A copy of this specification section, with addendum updates included, and referenced and applicable sections, with addendum updates included, with each paragraph check-marked (✓) to indicate specification compliance or marked to indicate requested deviations from specification requirements or those parts which are to be provided by the Contractor or others. Check marks shall denote full compliance with a paragraph as a whole. If deviations from the specifications are indicated, and therefore requested by the Contractor, each deviation shall be underlined and denoted by a number in the margin to the right of the identified paragraph, referenced to a detailed written explanation of the reasons for requesting the deviation. The Construction Manager shall be the final authority for determining acceptability of requested deviations. The remaining portions of the paragraph not underlined shall signify compliance on the part of the Contractor with the specifications. Failure to include a copy of the marked-up specification sections, along with justification(s) for requested deviations to the specification requirements shall be cause for rejection of the entire submittal and no further submittal material will be reviewed.

2. CSM's current printed recommendations and product data sheets for coating systems including:

a. Volatile organic compound (VOC) data
b. Surface preparation recommendations.
c. Primer type, where required.
d. Maximum dry and wet-mil thickness per coat.
e. Minimum and maximum curing time between coats, including atmospheric conditions for each.
f. Curing time before submergence in liquid.
g. Thinner to be used with each coating.
h. Ventilation requirements.
i. Minimum atmospheric conditions during which the paint shall be applied.
j. Allowable application methods.
k. Maximum allowable moisture content.
l. Maximum shelf life.

3. Affidavits signed and sealed by an officer of the CSM's corporation, attesting to full compliance of each coating system

component with current and promulgated federal, state, and local air pollution control regulations and requirements.

4. Material Safety Data Sheets (MSDS) for materials to be delivered to the job site, including coating system materials, solvents, and abrasive blast media.

5. List of cleaning and thinner solutions allowed by the CSMs.

6. Storage requirements including temperature, humidity, and ventilation for Coating System Materials as recommended by the CSMs.

7. CSM's detailed, written instructions for coating system treatment and graphic details for coating system terminations in the structures to be coated including pipe penetrations, metal embedments, gate frames, and other terminations to be determined from the contract drawings. This information shall also include detail treatment for coating system at joints in concrete.

8. The Contractor and CSA shall provide a minimum of five project references each including contact name, address, and telephone number where similar coating work has been performed by their companies in the past five years.

1.05 RESPONSIBILITIES OF THE CTR

The Contractor shall retain or obtain the services of the CTR to be on site to perform the Contractor and/or CSA application training and to routinely inspect and verify in writing that the application personnel have successfully performed surface preparation, filler/surface application, coating system application, and Quality Control Inspection in accordance with this Section 09900 and to warrantable level of quality. This must include checking the required degree of cleanliness, surface pH for concrete substrates, surface profile of substrates, proper mixing of coating materials, application (including checking the wet and dry film thickness of the coating systems), proper cure of the coating systems, and proper treatment of coating systems at terminations, transitions, and joints and cracks in substrates. Refer to Paragraph 1.05 B. for further details on these CTR requirements. This inspection is in addition to the inspection performed by the Contractor in accordance with this Section 09900.

A. COATING SYSTEM INSTALLATION TRAINING:

1. Provide a minimum of 8 hours of classroom and off site training for application and supervisory personnel (both the Contractor's and CSA's). Provide training to a minimum of two supervisory personnel from the CSA and one supervisor from the Contractor. Alternatively, the CTR shall provide a written letter from the CSM stating that the application personnel (listed by name) who shall perform coating work are approved by the CSM without further or additional training.

2. One CTR can provide training for up to fourteen application personnel and three supervisory personnel at one time. The training shall

include the following as a minimum:

a. A detailed explanation of mixing, application, curing, and termination details.

b. Hands-on demonstration of how to mix and apply the coating systems.

c. A detailed explanation of the ambient condition requirements (temperature and humidity) and surface preparation requirements for application of the coating system as well as a detailed explanation of re-coat times, cure times, and related ambient condition requirements.

d. When training is performed, the CTR shall provide a written letter stating that training was satisfactorily completed by the personnel listed by name in the letter.

B. COATING SYSTEM INSPECTION:

While on site to routinely inspect and verify, the CTR shall perform the following activities to confirm acceptability and conformance with the specifications:

1. Inspect ambient conditions during various coating system installation at hold points for conformance with the specified requirements.

2 Inspect the surface preparation of the substrates where the coating system will terminate or will be applied for conformance to the specified application criteria.

3. Inspect preparation and application of coating detail treatment (for example, terminations at joints, metal embedments in concrete, etc.).

4. Inspect application of the filler/surface materials for concrete and masonry substrates.

5. Inspect application of the primers and finish coats including wet and dry film thickness of the coatings.

6. Inspect coating systems for cure.

7. Review adhesion testing of the cured coating systems for conformance to specified criteria.

8. Review coating system continuity testing for conformance to specified criteria.

9. Inspect and record representative localized repairs made to discontinuities identified via continuity testing.

10. Conduct a final review of completed coating system installation for conformance to the specifications.

11. Prepare and submit a site visit report following each site visit that documents the acceptability of the coating work in accordance with the CSM's recommendations.

C. FINAL REPORT:

Upon completion of coating work for the project, the CTR shall prepare a final report. That report shall summarize daily test data, observations, drawings, and photographs in a report to be submitted in accordance with paragraph 09900-2.02. Include substrate conditions, ambient conditions, and application procedures, observed during the CTR's site visits. Include a statement that the completed work was performed in accordance with the requirements of this Section 09900 and the CSM's recommendations.

PART 2--PRODUCTS

2.01 MATERIALS

Notwithstanding the listing of product names in this Section 09900, the Contractor shall provide affidavits, signed and sealed by an officer of the CSM's corporation, attesting to full compliance of each coating system component with current and promulgated federal, state, and local air pollution control regulations and requirements. No coatings shall be applied to a surface until the specified affidavits have been submitted and have been reviewed and accepted. Failure to comply with this requirement shall be cause for rejection and removal of such materials from the site.

The following list specifies the material requirements for coating systems. Coating systems are categorized by generic name followed by an identifying abbreviation. If an abbreviation has a suffix number, it is for identifying subgroups within the coating system. Coating Systems E-5 and E-6 shall be NSF 61 certified. If the product number is no longer available, an equivalent or higher performance system shall be provided.

118. Coating Systems

119. Coating System		120. CSM	121. First Coat(s)	122. Finish Coat(s)
123. Epoxy Coatings				
124.	E-1	125. PPG PMC	126. Amerlock 2/400 Series	127. Amerlock 2/400 Series
		128. Carboline	129. Carboguard 890	130. Carboguard 890
		131. International Paint/ICI *	132. Devran 224 HS	133. Devran 224
		134. Sherwin Williams	135. Macropoxy 646	136. Macropoxy 646
		137. Tnemec	138. Series V69	139. Series V69
140.	E-1-G	141. PPG PMC	142. Amerlock 2/400 Series	143. Amerlock 2/400 Series
		144. Carboline	145. Carboguard 894	146. Carboguard 894
		147. International Paint/ICI *	148. Devran 223/224HS	149. Devran 224HS
		150. Sherwin Williams	151. Macropoxy 646	153. Macropoxy 646
			152. B67-600	154. B67-600
		155. Tnemec	156. Series V27 or V69	157. Series V69
158.	E-2	159. PPG PMC	160. Amerlock 2/400 Series	161. Amerlock 2/400 Series
		162. Carboline	163. Carboguard 890	164. Carboguard 890
		165. International Paint/ICI	166. Bar-Rust 236	167. Bar-Rust 236
		168. Sherwin Williams	169. Sea Guard 6000 Epoxy N11-400	170. Sea Guard 6000 Epoxy N11-400
		171. Tnemec	172. Series V27 or V69	173. Series V69
174.	E-3	175. PPG PMC	176. Amerlock 2/400 Series	177. Amerlock 2/400 Series
		178. Carboline	179. Carboguard 890	180. Carboguard 890
		181. International Paint/ICI	182. Bar-Rust 236	183. Bar-Rust 236
		184. Sherwin Williams	185. Sea Guard 6000 Epoxy N11-400	186. Sea Guard 6000 Epoxy N11-400
		187. Tnemec	188. Series V69	189. Series V69
190.	E-4	191. PPG PMC	192. Amerlock 2/400 Series	193. Amerlock 2/400 Series
		194. Carboline	195. Carboguard 890	196. Carboguard 890
		197. International Paint/ICI	198. Bar-Rust 236	199. Bar-Rust 236
		200. Sherwin Williams	201. Macropoxy 646	202. Macropoxy 646
		203. Tnemec	204. Series V69	205. Series V69
206.	E-5	207. PPG PMC	208. Amercoat 395FD	209. Amercoat 395FD
		210. Carboline	211. Carboguard 691	212. Carboguard 691
		213. International Paint/ICI	214. Bar-Rust 233H	215. Bar-Rust 233H
		216. Sherwin Williams	217. Macropoxy 646	218. Macropoxy 646
		219. Tnemec	220. Series V69	221. Series V69
222.	E6	223. PPG PMC	224. Amercoat 395FD	225. Amercoat 395FD
		226. Carboline	227. Carboguard 691	228. Carboguard 691
		229. International Paint/ICI	230. Tru-Glaze 4408 - WB	231. Tru-Glaze 4408 - WB
		232. Sherwin Williams	233. Macropoxy 646	234. Macropoxy 646
		235. Tnemec	236. Series V69	237. Series V69

118. Coating Systems

119. Coating System		120. CSM	121. First Coat(s)	122. Finish Coat(s)
238.	E7	239. PPG PMC	240. Amercoat 385	241. Amercoat 385
		242. Carboline	243. Sanitile 120	244. Carboguard 890
		245. International Paint/ICI	246. Bar-Rust 236	247. Bar-Rust 236
		248. Sherwin Williams	249. Macropoxy 646	250. Macropoxy 646
		251. Tnemec	252. Series V69	253. Series V69
254.	E8	255. PPG PMC	256. Amercoat 385	257. Amercoat 385
		258. Carboline	259. Carboguard 1340	260. Carboguard 1340
		261. International Paint/ICI	262. Prep and Prime (Gripper)	263. Tru-Glaze 4408 - WB
		264. Sherwin Williams	265. Macropoxy 646	266. Macropoxy 646
		267. Tnemec	268. Series 201	269. Series 201
270.	E-9	271. PPG PMC	272. Amercoat 395 FD	273. Amercoat 395 FD
		274. Carboline	275. Carboguard 890	276. Carboguard 890
		277. International Paint/ICI	278. Bar-Rust 231	279. Bar-Rust 231
		280. Sherwin Williams	281. Sea Guard 6000 Epoxy N11-400	282. Sea Guard 6000 Epoxy N11-400
		283. Tnemec	284. Series 104	285. Series 104
286.	E-9-C	287. PPG PMC	288. Amercoat 395 FD	289. Amercoat 395 FD
		290. Carboline	291. Carboguard 890	292. Carboguard 890
		293. International Paint/ICI	294. Bar-Rust 231	295. Bar-Rust 231
		296. Sherwin Williams	297. Sea Guard 6000 Epoxy N11-400	298. Sea Guard 6000 Epoxy N11-400
		299. Tnemec	300. Series 104	301. Series 104
302.	E-10	303. PPG PMC	304. Amerlock 2/400 Series	305. Amerlock 2/400 Series
		306. Carboline	307. Carboguard 890	308. Carboguard 890
		309. International Paint/ICI	310. Bar-Rust 236	311. Bar-Rust 236
		312. Sherwin Williams	313. Macropoxy 646	314. Macropoxy 646
		315. Tnemec	316. Series V69	317. Series V69

318. Specialty Epoxy Linings

319.	EA-1	320.	Carboline	321.	Plasite 4500S			322.	Plasite 4500S
		323.	Sauereisen	324.	Sewergard 210S			325.	Sewergard 210S
		326.	Tnemec	327.	Series 435			328.	Series 435
329.	EA-2	330.	Carboline Carboguard	331.	Plasite 4500S	332.	Filler Surfacer – Carboguard 510	333.	Plasite 4500S
		334.	Sauereisen	335.	Sewergard 210S	336.	Filler Surfacer - 209 HB	337.	Sewergard 210S
		338.	Tnemec	339.	Series 435	340.	Filler Surfacer – Series 218	341.	Series 435
342.	EA-3	343.	Carboline	344.	N/A	345.	Filler Surfacer – Carboguard 510	346.	Plasite 5371

118. Coating Systems

119. Coating System	120. CSM	121. First Coat(s)	122. Finish Coat(s)
347. Sauereisen	348. N/A	349. Filler Surfacer - 209 HB	350. Sewergard 210T
351. Tnemec	352. N/A	353. Filler Surfacer – Series 218	354. Series 434

355. oating System	356. CSM	357. Primer	358. Base Coat	359. Glaze Coat
360. EA-4	361. Carboline	362. N/A	363. Plasite 5371	364. Plasite 4500S
	365. Sauereisen	366. N/A	367. Sewergard 210T	368. Sewergard 210G
	369. Tnemec	370. N/A	371. Series 434	372. Series 435
				373.

374. Coating System	375. CSM	376. Primer	377. Filler/ 378. Surfacer	379. Base Coat w/Scim Cloth	380. Saturation Coat w/Silica Sand	381. Finish Coats
382. EA-5	383. Tnemec	384. Series 201	385. Series 218	386. Series 239	387. Series 239	388. Series 282
	389. Carboline	390. Semstone 110/110 EP	391. Carboguard 510	392. Semstone 145	393. Semstone 145	394. Semstone 145

395. Elastomeric Coatings

396.	EC-1	397.	Carboline	398.	Carboguard 671	399.	Polibrid 705 (2 coats)
		400.	Sherwin Williams	401.	Corobond 100	402.	Envirolastic 170 (2 coats)
		403.	Tnemec	404.	Series 1	405.	Series 406 (2 coats)
406.	EC-2	407.	Carboline	408.	Carboguard 671	409.	Polibrid 705 (2 coats)
		410.	Sherwin Williams	411.	Corobond 100	412.	Envirolastic 520PW (2 coats)
		413.	Tnemec	414.	Series V69	415.	Series 264

***See CSM's Product Data Sheets for acceptable thinners for VOC compliance or do not thin.**

118. Coating Systems

119. Coating System	120. CSM	121. First Coat(s)	122. Finish Coat(s)
Epoxy Flooring Systems			
Coating System	CSM	Primer	Intermediate Coat	16. Finish Coat
EF-1	Stonhard Tnemec	Stonhard Standard Primer Series 238	Stonshield Undercoat and Broadcoat Series 238 with Broadcoat	Stoneshield Sealer Series 284 Clear
EF-2	Stonhard Tnemec	Stonhard Standard Primer Series 238	Stonclad GS Series 238	Stonkote GS-4 Series 280

417. Epoxy Polyurethane

		Primer Coat(s)	Intermediate Coat(s)	418.
EU-1	PPG PMC Carboline International Paint/ICI Sherwin Williams Tnemec	Amercoat Carbozinc 859 Cathacoat 313 Zinc Clad IV Series 90-97	Amercoat 385 Carboguard 890 Devran 233 or 224HS Macropoxy 646 Series V69	Amercoat 450H Carbothane 134 VOC Devthane 379 Hi Solids Polyurethane Series 1075
EU-1-FRP	PPG PMC Carboline International Paint/ICI Sherwin Williams Tnemec	Amerlock 2/400 Series Carbocrylic 120 Devran 223/224 Macropoxy 646 Series V27		Amershield VOC Carbothane 134 VOC Devthane 378H High Solids Polyurethane Series 1075
Grease				
G	Texaco Chevron	N/A N/A		Rust Inhibitive Grease E.P. Roller Grease
High Heat				
HH-1	High Temperature Coatings, Inc.	Hi Temp 1027		1000 VS (any color)
HH-2	High Temperature Coatings, Inc.	Hi Temp 1027		1000 VS (black or aluminum)
Latex Acrylic				
L-1	PPG PMC Carboline International Paint/ICI Sherwin Williams Tnemec	Amercoat 148 Carbocrylic 120 UH Gripper 3210 Loxon Acrylic Primer Series 1028 or 1029		Amercoat 220 Carbocrylic 3359 Dulux Pro 1406 Sher Cryl HPA Series 1028 or 1029
L-2	PPG PMC Carboline International Paint/ICI Sherwin Williams	Amercoat 220 Carbocrylic 120 Prep and Prime Gripper 419. Sher Cryl HPA		Amercoat 220 Carbocrylic 3359 Ultrahide 250-1406 420. Sher Cryl HPA

118. Coating Systems

119. Coating System	120. CSM	121. First Coat(s)	122. Finish Coat(s)
	Tnemec	Series 1028 or 1029	Series 1028 or 1029
L-3	PPG PMC	Amercoat 148	Amercoat 220
	Carboline	Carbocrylic 3359 DTM	Carbocrylic 3359 DTM
	International Paint/ICI	Devflex 4020 PF	Dulux Pro 1406
	Sherwin Williams	Procryl Primer	Sher Cryl HPA
	Tnemec	Series 1028 or 1029	Series 1028 or 1029
L-4	PPG PMC	Amercoat 148	Amercoat 220
	Carboline	Sanitile 120	Sanitile 155
	International Paint/ICI	Prepared Prime Gripper	Ultrahide 250-1406
	Sherwin Williams	Prep Rite ProBlock	Sher Cryl HPA
	Tnemec	Series 1028 or 1029	Series 1028 or 1029
Miscellaneous			
M-1	Carboline	Carbowrap Priming Paste	Tape A, B, or C (temp. dependent)
	Denso	Denso Paste	Densyl Tape
	Trenton	Waxtape Primer	#1 Wax Tape
M-2	Carboline	Carbomastic 15	Carbomastic 15
	International Paint/ICI	Bar-Rust 231 (231K 9100)	Bar-Rust 231 (231K 9100)
	Sherwin Williams	Epoxy Mastic Aluminum II	Epoxy Mastic Aluminum II
	Tnemec	Series 135 (1243)	Series 135 (1243)
Penetrating Stain			
	421. CSM	**422. Primer**	**423. Finish**
S-1	Carboline	Carbocrete Sealer WB	Carbocrete Sealer WB
	International Paint/ICI	Groundworks	Groundworks
	Sherwin Williams	H&C Acrylic Concrete Stain	H&C Acrylic Concrete Stain
	Tnemec	Series 617	Series 617
S-2	Tnemec	N/A	Series 636 Dur A Pell 20
	Curecrete Chemical Company	N/A	Ashford Formula
S-3	Tnemec	N/A	Series V626 Dur A Pell GS
S-4	Tnemec	N/A	Series V626 Dur A Pell GS
	Professional Products of Kansas	N/A	PWS-15 Super

***See CSM's Product Data Sheets for acceptable thinners for VOC compliance or do not thin.**

2.02 PRODUCT DATA

1. Prior to application of coatings, submit letter(s) from the CTR(s) identifying the application personnel who have satisfactorily completed training as specified in paragraph 09900-1.05 or a letter from the CSM stating that personnel who shall perform the work are approved by the CSM without need for further or additional training.

2. Submit reports specified in paragraph 09900-1.02 C.10 and 09900-1.05 B.12 when the work is underway.

3. Submit the Coating System Inspection Checklists, using Form 09900-A, included in Section 01999, for the coating work.

4. CTR final report in accordance with paragraph 09900-1.05 C.

PART 3--EXECUTION

3.01 COATINGS

A. GENERAL:

Coating products shall not be used until the Construction Manager has accepted the affidavits specified in paragraph 09900-1.04 and 2.01, the Construction Manager has inspected the materials, and the CTR has trained the Contractor and CSA in the surface preparation, mixing and application of each coating system.

B. SHOP AND FIELD COATS:

1. SHOP APPLIED PRIME COAT: Except as otherwise specified, prime coats may be shop-applied or field-applied. Shop-applied primer shall be compatible with the specified coating system and shall be applied at the minimum dry film thickness recommended by the CSM. Data sheets identifying the shop primer used shall be provided to the on-site coating application personnel. Adhesion tests shall be performed on the shop primer as specified in paragraph 09900-3.01B.3. Damaged, deteriorated and poorly applied shop coatings that do not meet the requirements of this Section 09900 shall be removed and the surfaces recoated. If the shop primer coat meets the requirements of this Section 09900, the field coating may consist of touching up the shop prime coat and then applying the finish coats to achieve the specified film thickness and continuity.

2. FIELD COATS: Field coats shall consist of one or more prime coats and one or more finish coats to build up the coating to the specified dry film thickness. Unless otherwise specified, finish coats shall not be applied until other work in the area is complete and until previous coats have been inspected.

3. ADHESION CONFIRMATION: The Contractor shall perform an adhesion test after proper cure in accordance with ASTM D3359 to demonstrate that (1) the shop applied prime coat adheres to the substrate, and (2) the specified field coatings adhere to the shop coat. Test results showing an adhesion rating of 5A on immersed surfaces and 4A or better on other surfaces shall be considered acceptable for coatings 5 mils or more in thickness (Method A).

Test results showing an adhesion rating of 5B on immersed surfaces and 4B or better on other surfaces shall be considered acceptable for coating thicknesses less than 5 mils.

424.

C. APPLICATION LOCATION REQUIREMENTS:

1. EQUIPMENT, NONIMMERSED: Items of equipment, or parts of equipment that are not immersed in service, shall be shop primed and then finish coated in the field after installation with the specified or acceptable color. If the shop primer requires topcoating within a specified period, the equipment shall be finish coated in the shop and then touch-up painted after installation. If equipment removal and reinstallation is required for the project, touch-up coating work shall be performed in the field following installation.

2. EQUIPMENT, IMMERSED: Items of equipment, or parts and surfaces of equipment that are immersed when in service, with the exception of pumps and valves, shall have surface preparation and coating work performed in the field. Coating systems applied to immersed equipment shall be pinhole free.

3. STEEL WATER TANKS: The interior surfaces of steel water tanks or reservoirs shall have surface preparation and coating work performed in the field.

Erect and maintain protective enclosures as stipulated per SSPC-Guide 6 Guide for Containing Debris Generated During Paint Removal Operations.

3.02 PREPARATION

A. GENERAL:

Surface preparations for each type of surface shall be in accordance with the specific requirements of each coating specification sheet (COATSPEC) and the following. In the event of a conflict, the COATSPEC sheets shall take precedence.

Surfaces to be coated shall be clean and dry. Before applying coating or surface treatments, oil, grease, dirt, rust, loose mill scale, old weathered coatings, and other foreign substances shall be removed. Oil and grease shall be removed before mechanical cleaning is started. Where mechanical cleaning is accomplished by blast cleaning, the abrasive used shall be washed, graded and free from contaminants that might interfere with the adhesion of the coatings. The air used for blast cleaning shall be sufficiently free of oil and moisture so as not to cause detrimental contamination of the surfaces to be coated.

Where deemed necessary by the Owner’s representative, a NACE International certified coatings inspector, provided by the Owner, will inspect and approve surfaces to be coated before application of a coating. Surface defects identified by the inspector shall be corrected by the Contractor at no additional cost to the Owner.

Cleaning and painting shall be scheduled so that dust and spray from the cleaning process shall not fall on wet, newly coated surfaces. Hardware, hardware accessories, nameplates, data tags, machined surfaces, sprinkler heads, electrical fixtures, and similar uncoated items which are in contact with coated surfaces shall be removed or masked prior to surface preparation and painting operations. Following completion of coating, removed items shall be reinstalled. Equipment adjacent to walls shall be disconnected and moved to permit

cleaning and painting of equipment and walls and, following painting, shall be replaced and reconnected.

B. BLAST CLEANING:

When abrasive blast cleaning is required to achieve the specified surface preparation the following requirements for blast cleaning materials and equipment shall be met:

1. Used or spent blast abrasive shall not be reused on this project.

2. The compressed air used for blast cleaning shall be filtered and shall contain no condensed water and no oil. Moisture traps shall be cleaned at least once every four hours or more frequently as required to prevent moisture from entering the supply air to the abrasive blasting equipment.

3. Oil separators shall be installed just downstream of compressor discharge valves and at the discharge of the blast pot discharges. These shall be checked on the same frequency as the moisture traps as defined in item 2 above.

4. Regulators, gauges, filters, and separators shall be in use on compressor air lines to blasting nozzles times during this work.

5. An air dryer or desiccant filter drying unit shall be installed which dries the compressed air prior to blast pot connections. This dryer shall be used and maintained for the duration of surface preparation work.

6. The abrasive blast nozzles used shall be of the venturi or other high velocity type supplied with a minimum of 100 psig air pressure and sufficient volume to obtain the blast cleaning production rates and cleanliness/specified.

7. The Contractor shall provide ventilation for airborne particulate evacuation (meeting pertinent safety standards) to optimize visibility for both blast cleaning and inspection of the substrate during surface preparation work.

8. If, between final surface preparation work and coating system application, contamination of prepared and cleaned metallic substrates occurs, or if the prepared substrates' appearance darkens or changes color, recleaning by water blasting, reblasting and abrasive blast cleaning shall be required until the specified degree of cleanliness is reclaimed.

9. The Contractor is responsible for dust control and for protection of mechanical, electrical, and other equipment adjacent to and surrounding the work area.

C. SOLVENT CLEANING:

Any solvent wash, solvent wipe, or cleaner used, including but not limited to those used for surface preparation in accordance with SSPC SP-1 Solvent Cleaning and shall be of the emulsifying type which emits no more than 340 g/l VOCs for AIM regions, 250 g/l for CARB regions and 100 g/l for SCAQMD regions, contains no phosphates, is biodegradable, removes no zinc, and is compatible with the specified primer.

Clean white cloths and clean fluids shall be used in solvent cleaning.

D. METALLIC SURFACES:

Metallic surfaces shall be prepared in accordance with applicable portions of surface preparation specifications of the Society for Protective Coatings (SSPC) specified for each coating system. See Coat Spec for each coating system in this Section 09900. The profile depth of the surface to be coated shall be in accordance with the COATSPEC requirements in this Section measured by Method C of ASTM D4417. Blast particle size shall be selected by the Contractor to produce the specified surface profile. The solvent in solvent cleaning operations shall be as recommended by the CSM.

Preparation of metallic surfaces shall be based upon comparison with SSPC-VIS1-89 (ASTM D2200), and as described in the Coat Spec for each coating system. If dry abrasive blast cleaning is selected and to facilitate inspection, the Contractor shall, on the first day of cleaning operations, abrasive blast metal panels to the standards specified. Plates shall measure a minimum of 8-1/2 inches by 11 inches. Panels meeting the requirements of the specifications shall be initialed by the Contractor and the Construction Manager and coated with a clear non-yellowing finish. One of these panels shall be prepared for each type of abrasive blasting and shall be used as the comparison standard throughout the project.

Blast cleaning requirements for steel, ductile iron and stainless steel substrates are as follows:

1. Steel piping shall be prepared in accordance with SSPC SP-6 (Commercial Blast Cleaning) and primed before installation. Ductile iron piping surfaces including fittings shall be prepared in accordance with NAPF 500-03, NAPF 500-03-04, and NAPF 500-03-05.

2. Stainless steel surfaces shall be abrasive blast cleaned to leave a clean uniform appearance with a minimum surface profile of 1.5 to 2.5 mils that is uniform.

3. Remove traces of grit, dust, dirt, rust scale, friable material, loose corrosion products or embedded abrasive from substrate by vacuum cleaning prior to coating application.

4. Care must be taken to prevent contamination of the surface after blasting from worker's fingerprints, deleterious substances on workers' clothing, or from atmospheric conditions.

5. Ambient environmental conditions in the enclosure must be

constantly monitored and maintained to ensure the degree of cleanliness is held and no “rust back” occurs prior to coating material application.

E. CONCRETE SURFACES:

1. Inspection of concrete surfaces prior to surface preparation and surface preparation of concrete surfaces shall be performed in accordance with SSPC-SP13 (also called NACE 6).

2. Prepare substrate cracks, areas requiring resurfacing and perform detail treatment including but not limited to, terminating edges, per CSM recommendations. This shall precede surface preparation for degree of cleanliness and profile.

3. The surface profile for prepared concrete surfaces to be coated shall be evaluated by comparing the profile of the prepared concrete with the profile of graded abrasive paper, as described in ANSI B74.18 or by comparing the profile with the ICRI 03732 (surface profile replicas). Surface profile requirements shall be in accordance with the Coat Spec requirements and the CSM’s recommendations.

4. Surface cleanliness of prepared concrete substrates shall be inspected after cleaning, preparation, and/or drying, but prior to making repairs or applying a coat in the coating system. If concrete surfaces are repaired, they shall be reinspected for surface cleanliness prior to application of the coating system.

5. Surface preparation of concrete substrates shall be accomplished using methods such as dry abrasive blast cleaning, high, or ultra high-pressure water blast cleaning in accordance with SSPC-SP-13. The selected cleaning method shall produce the requirements set forth below.

a. A clean substrate that is free of calcium sulfate, loose coarse or fine aggregate, laitance, loose hydrated cement paste, and otherwise deleterious substances shall be achieved. Blast cleaning and other means necessary shall be used to open up air voids or bugholes to expose their complete perimeter. Leaving shelled over, hidden air voids beneath the exposed concrete surface is not acceptable. Concrete substrate must be dry prior to the application of filler/surface or coating system materials.

Acceptable surface preparation must produce a concrete surface with a minimum pH of 8.0 to be confirmed by surface pH testing. If after surface preparation, the surface pH remains below 8.0, perform additional water blasting, cleaning, or abrasive blast cleaning until additional pH testing indicates an acceptable pH level.

b. Following inspection by the Contractor of the concrete surface preparation, thoroughly vacuum clean concrete surfaces

to be coated to remove loose dirt, and spent abrasive (if dry blast cleaning is used) leaving a dust free, sound concrete substrate. Debris produced by blast cleaning shall be removed from the structures to be coated and disposed of legally off site by the Contractor.

6. Should abrasive blast cleaning or high or ultrahigh pressure water blasting not remove degraded concrete, chipping or other abrading tools shall be used to remove the deteriorated concrete until a sound, clean substrate is achieved which is free of calcium sulfate, loose coarse or fine aggregate, laitance, loose hydrated cement paste, and otherwise deleterious substances. Concrete substrates must be dry prior to the application of filler/surfacers or coating system materials.

7. Surface cleanliness of prepared concrete substrates shall be inspected after cleaning, preparation, and/or drying, but prior to application of coating materials. If concrete surfaces are repaired, they shall be reinspected for surface cleanliness and required surface profile prior to application of the coating system.

8. Moisture content of concrete to be coated shall be tested in accordance with ASTM D4263, Standard Test Method for Indicating Moisture in Concrete by the Plastic Sheet Method and ASTM F 1869, Standard Test Method for Measuring Moisture Vapor Emission Rate of Concrete Subfloor Using Anhydrous Calcium Chloride. The ASTM D4263 plastic sheet test shall be conducted at least once for every 500 sq. ft. of surface area to be coated. The presence of any moisture on plastic sheet following test period constitutes a non-acceptable test. For concrete surfaces to be coated which are on the negative or back side of concrete walls or structures exposed to soils (back filled) or immersed and waterproofed in accordance with Section 07100, perform calcium chloride tests in accordance with ASTM F-1869 once for each 500 sq. ft. of surface area to be coated. Comply with CSM's written recommendations regarding acceptance/non-acceptance of moisture vapor emissions.

F. MASONRY SURFACES:

1. Prepare masonry surfaces such as Concrete Masonry Units (CMU) to remove chalk, loose dirt, dried mortar splatter, dust, peeling, or loose existing coatings, or otherwise deleterious substances to leave a clean, sound substrate.

2. Be certain masonry surfaces are dry prior to coating application. If pressure washing or low-pressure water blast cleaning is used for preparation, allow the masonry to dry for at least 5 days under dry weather conditions or when the minimum ambient temperature is 70 degrees F prior to coating application work.

G. FIBERGLASS REINFORCED PLASTIC (FRP) SURFACES:

Prepare FRP surfaces by sanding to establish uniform surface roughness and to remove gloss from the resin in the FRP. Next, vacuum clean to remove loose FRP dust, dirt, and other materials. Next, solvent clean using clean white rags and allow solvent to evaporate completely before application of coating materials.

H. EXISTING FACILITIES:

Existing equipment and metalwork shall be coated in accordance with the appropriate coating system specified for new work in paragraph 3.05 COATSPEC.

Modified work shall require the full coating system. Other work shall require cleaning and surface preparation as recommended by the CSM followed by two finish coats of the appropriate system.

Contractor shall demonstrate that the existing coating is compatible with field coating by performing the adhesion test specified in paragraph 09900 – 3.01 B.3. Where unacceptable test results are obtained, the Contractor shall follow manufacturer's written instructions as to the necessity of a tie coat to provide a satisfactory bond between the existing coating and the specified field coating.

Abrasive blasting shall be used to clean wall surfaces of existing process channels and tanks to be coated. Surfaces to be coated, or recoated, shall be repaired, cleaned, and finished to the standards as specified herein and in Section 03300 for new concrete. Major repair work for wall surfaces of (specify surfaces) shall be as specified in Section 03300.

3.03 APPLICATION

A. WORKMANSHIP:

1. Coated surfaces shall be free from runs, drips, ridges, waves, laps, and brush marks. Coats shall be applied to produce an even film of uniform thickness completely coating corners and crevices.

2. The Contractor's equipment shall be designed for application of the materials specified. Compressors shall have suitable traps and filters to remove water and oils from the air. A paper blotter test shall be performed by the Contractor when requested by the Construction Manager to determine if the air is sufficiently free of oil and moisture so as not to produce deteriorating effects on the coating system. The amount of oil and moisture in spray air shall be less than the amount recommended by the CSM. Spray equipment shall be equipped with mechanical agitators, pressure gages, and pressure regulators, and spray nozzles of the proper sizes.

3. Each coat of coating material shall be applied evenly and sharply cut to line. Care shall be exercised to avoid overspraying or spattering paint on surfaces not to be coated. Glass, hardware, floors, roofs, and other adjacent areas and installations shall be protected by taping, drop

cloths, or other suitable measures.

4. Coating applications method shall be conventional or airless spray, brush or roller, or trowel as recommended by CSM.

5. Allow each coat to cure or dry thoroughly, according to CSM's printed instructions, prior to recoating.

6. Vary color for each successive coat for coating systems when possible.

7. When coating complex steel shapes, prior to overall coating system application, stripe coat welds, edges of structural steel shapes, metal cut-outs, pits in steel surfaces, or rough surfaces with the primer coat. This involves applying a separate coat using brushes or rollers to ensure proper coverage. Stripe coat via spray application is not permitted.

B. COATING PROPERTIES, MIXING AND THINNING:

Coatings, when applied, shall provide a satisfactory film and smooth even surface. Glossy undercoats shall be lightly sanded to provide a surface suitable for the proper application and adhesion of subsequent coats. Coating materials shall be thoroughly stirred, strained, and kept at a uniform consistency during application. Coatings consisting of two or more components shall be mixed in accordance with the CSM's instructions. Where necessary to suit the conditions of the surface, temperature, weather and method of application, the coating may be thinned as recommended by the CSM immediately prior to use. The volatile organic content (VOC) of the coating as applied shall comply with prevailing air pollution control regulations. Unless otherwise specified, coatings shall not be reduced more than necessary to obtain the proper application characteristics. Thinner shall be as recommended by the CSM.

C. ATMOSPHERIC CONDITIONS:

Coatings shall be applied only to surfaces that are dry, and only under conditions of evaporation rather than condensation. Coatings systems shall not be applied during rainy, misty weather, or to surfaces upon which there is frost or moisture condensation. During damp weather, when the temperature of the surface to be coated is within 10 degrees F of the dew point, forced dehumidification equipment may be used to maintain a temperature of minimum 40 degrees F and 10 degrees F above the dew point for the surfaces to be coated, the coated surface, and the atmosphere in contact with the surface. These conditions shall be maintained for a period of at least 8 hours or as recommended by the CSM. Where conditions causing condensation are severe, dehumidification equipment, fans, and/or heaters shall be used inside enclosed areas to maintain the required atmospheric and surface temperature requirements for proper coating application and cure.

D. CONCRETE SUBSTRATE TEMPERATURES AND DETAIL TREATMENT:

1. When the surface temperatures of the concrete substrates to be coated are rising or when these substrates are in direct sunlight, outgassing of air from the concrete may result in bubbling, pinhole formations, and/or blistering in the coating system. The

application of the filler/surface and the coating system will only be allowed during periods of falling temperature. This will require that application of the filler/surface and coating system shall only occur during the cooler evening hours. Contractor shall include any cost for working outside of normal hours in the bid.

Should bubbles, pinholes, or discontinuities form in the applied coating system material, they shall be repaired as recommended by the CSM. Should pinholes develop in the filler/surfacer material or in the first coat of the coating material, the pinholes shall be repaired in accordance with the CSM's recommendations prior to application of the next coat of material. Whenever pinholes occur, the air void behind or beneath the pinhole shall be opened up completely and then completely filled with the specified filler/surfacer material. Next, the coated area around the pinhole repair shall be abraded and the coating reapplied over that area.

2. Perform application detail work per CSM's current written recommendations and/or drawings.

E. PROTECTION OF COATED SURFACES:

Items that have been coated shall not be handled, worked on, or otherwise disturbed, until the coating is completely dry and hard. After delivery at the site, and upon permanent erection or installation, shop-coated metalwork shall be recoated or retouched with specified coating when it is necessary to maintain the integrity of the film.

F. METHOD OF COATING APPLICATION:

1. Where two or more coats are required, alternate coats shall contain sufficient compatible color additive to act as indicator of coverage, or the alternate coats shall be of contrasting colors. Color additives shall not contain lead, or lead compounds, which may be destroyed or affected by hydrogen sulfide or other corrosive gas, and/or chromium.

2. Mechanical equipment, on which the equipment manufacturer's coating is acceptable, shall be touch-up primed and coated with two coats of the specified coating system to match the color scheduled. Electrical and instrumentation equipment specified in Divisions 16 and 17 shall be coated as specified in paragraph 09900-3.03 I.

3. Coatings shall not be applied to a surface until it has been prepared as specified. The primer or first coat shall be applied by brush to ferrous surfaces that are not blast-cleaned. Coats for blast-cleaned ferrous surfaces and subsequent coats for nonblast-cleaned ferrous surfaces may be either brush or spray applied. After the prime coat is dry, pinholes and holidays shall be marked, repaired in accordance with CSM's recommendations and retested before succeeding coats are applied. Unless otherwise specified, coats for concrete and masonry shall be brushed, rolled, or troweled.

G. FILM THICKNESS AND CONTINUITY:

1. WFT of the first coat of the coating system and subsequent coats shall be verified by the Contractor, following application of each coat.

2. The surface area covered per gallon of coating for various types of surfaces shall not exceed those recommended by the CSM. The first coat, referred to as the prime coat, on metal surfaces refers to the first full paint coat and not to solvent wash, grease emulsifiers or other pretreatment applications. Coatings shall be applied to the thickness specified, and in accordance with these specifications. Unless otherwise specified, the average total thickness (dry) of a completed protective coating system on exposed metal surfaces shall be not less than 1.25 mils per coat. The minimum thickness at any point shall not deviate more than 25 percent from the required average. Unless otherwise specified, no less than two coats shall be applied.

3. In testing for continuity of coating about welds, projections (such as bolts and nuts), and crevices, the Construction Manager shall determine the minimum conductivity for smooth areas of like coating where the dry-mil thickness has been accepted. This conductivity shall be the minimum required for these rough or irregular areas. Pinholes and holidays shall be recoated to the required coverage.

4. The ability to obtain specified film thickness is generally compromised when brush or roller application methods are used and, therefore, more coats may need to be applied to achieve the specified dry film thickness.

5. For concrete substrates, the Contractor shall apply a complete skim coat of the specified filler/surfacer material over the entire substrate prior to application of the coating system. This material shall be applied such that all open air voids and bugholes in the concrete substrate are completely filled prior to coating application.

H. SPECIAL REQUIREMENTS:

Before erection, the Contractor shall apply all but the final finish coat to interior surfaces of roof plates, roof rafters and supports, pipe hangers, piping in contact with hangers, and contact surfaces that are inaccessible after assembly. The final coat shall be applied after erection. Structural friction connections and high tensile bolts and nuts shall be coated after erection. Areas damaged during erection shall be hand-cleaned or power-tool cleaned and recoated with primer coat prior to the application of subsequent coats. Touch-up of surfaces shall be performed after installation. Surfaces to be coated shall be clean and dry at the time of application. Except for those to be filled with grout, the underside of equipment bases and supports that have not been galvanized shall be coated with at least two coats of primer specified for system E-2 prior to setting the equipment in place. Provide coating system terminations at leading edges and transitions to other substrates in accordance with the CSM's recommendations or detail drawings.

I. ELECTRICAL AND INSTRUMENTATION EQUIPMENT AND MATERIALS:

Electrical and instrumentation equipment and materials shall be coated by the equipment manufacturer as specified below.

1. FINISH: Electrical equipment shall be treated with zinc phosphate, bonderized or otherwise given a rust-preventive treatment. Equipment shall be primed, coated with enamel, and baked. Minimum dry film thickness shall be 3 mils.

2. Unless otherwise specified, instrumentation panels shall be coated with system E-1 for indoor mounting and system EU-1 for outdoor mounting.

3. Before final acceptance, the Contractor shall touch up scratches on equipment with identical color coating. Finish shall be smooth, free of runs, and match existing finish. Prior to touching up scratches, Contractor shall fill them with an appropriate filler material approved by the CSM.

4. COLOR: Exterior color of electrical equipment shall be FS 26463 (ANSI/NSF 61) light gray. Interior shall be painted FS 27880 white. Nonmetallic electrical enclosures and equipment shall be the equipment manufacturer's standard grey color.

Exterior color of instrumentation panels and cabinets mounted indoors shall be FS 26463 light gray; unless otherwise specified, exterior color for cabinets mounted outdoors shall be FS 27722, white. Cabinet interiors shall be FS 27880, white.

J. SOLUBLE SALT CONTAMINATION OF METALLIC SUBSTRATES:

Contractor shall test in accordance with SSPC-TU-4 metallic substrates to be coated that have been exposed to seawater or coastal air or to industrial fallout of particulate or other sources of soluble chlorides (such as wastewater exposure). If testing indicates detrimental levels of soluble salts, those in excess of 25 ppm, the Contractor shall clean and prepare these surfaces to remove the soluble salts.

3.04 CLEANUP

Upon completion of coating, the Contractor shall remove surplus materials, protective coverings, and accumulated rubbish, and thoroughly clean surfaces and repair overspray or other coating-related damage.

3.05 COATING SYSTEM SPECIFICATION SHEETS (COATSPEC)

Coating systems for different types of surfaces and general service conditions for which these systems are normally applied are specified on the following COATSPEC sheets. Surfaces shall be coated in accordance with the COATSPEC to the system thickness specified. Coating systems shall be as specified in paragraph 09900-3.06, Coating System Schedule. In

case of conflict between the schedule and the COATSPECS, the requirements of the schedule shall prevail.

Coating Specification Sheets included in Table 09900A are included this paragraph 09900-3.05.

Table 09900A Coating Specification Sheets

Coating System ID	Coating Material	Surface	Service Condition
E-1	Epoxy	Metal	Interior; exterior, covered, not exposed to direct sunlight, non-corrosive exposure.
E-1-G	Epoxy	Galvanized Steel	Interior; exterior, covered non-corrosive exposure. Do not use in immersion service.
E-2	Epoxy	Metal	Immersed, nonpotable; non-immersed, moderately corrosive environment, color required.
E-3	Epoxy	Concrete or Masonry	Immersed, nonpotable; non-immersed, corrosive environment, color required.
E-4	Epoxy	Concrete, masonry, plaster, gypsum board	Interior
E-5 (NSF 61 certified)	Epoxy	Metal	Interior potable water tanks and reservoirs and other metal components in contact with water being treated and stored for potable use.
E-6 (NSF 61 certified)	Epoxy	Concrete	Interior potable water tanks and reservoirs and other metal components in contact with water being treated or stored.
E-7	Epoxy	Plastic	Interior; exterior covered, not exposed to direct sunlight.
E-8	Clear epoxy	Wood	Interior
E-9	Epoxy	Metal	Immersed, nonpotable; non-immersed, corrosive environment, color required. (Not for Biogenic Sulfide Corrosion areas.)
E-9-C	Epoxy	Concrete or masonry	Immersed, nonpotable; non-immersed, moderately corrosive environment, color required. (Not for Biogenic Sulfide Corrosion areas.)
E-10	Polyamidoamine epoxy	Metal or concrete	Below grade (buried).
EF-1	Amine Epoxy Broadcast Floor Coating	Concrete Floors	Light duty, wheeled traffic, frequent foot traffic, mildly corrosive.
EF-2	Amine Epoxy Troweled Floor Coating	Concrete Floors	Heavy-duty, wheeled traffic, frequent foot traffic, wet and moderately corrosive.

Coating System ID	Coating Material	Surface	Service Condition
EA-1	Blended Amine Cured Epoxy	Metal	Immersed, nonpotable; non-immersed, corrosive environment, color not required especially for headspace environments that are corrosive due to biogenic sulfide corrosion.
EA-2	Blended Amine Cured Epoxy	Concrete or masonry	Immersed, nonpotable; non-immersed, corrosive environment, color not required, new construction especially for headspace environments that are corrosive due to biogenic sulfide corrosion.
EA-3	Blended Amine Cured Epoxy	Concrete or Masonry	Immersed, nonpotable; non-immersed, corrosive environment, color not required, new or existing construction, especially for headspace environments that are corrosive due to biogenic sulfide corrosion.
EA-4	Blended Amine Cured Epoxy – For Very Corrosive Conditions	Concrete or Masonry Potable	Non-immersed or immersed, very corrosive environment. Very high H_2S conditions.
EA-5	Novolac Epoxy Lining	Concrete	Secondary containment for spills of HFS acid or ferric chloride.
G	Grease	Metal	Ferrous Metal: Ferrous metal surfaces shall be prepared in accordance with SSPC SP-1 (Solvent Cleaning.)
HH-1	Proprietary Primer Plus Silicone Topcoat	Metal	Temperature to 750 degrees F.
HH-2	Proprietary Primer Plus Silicone Topcoat (black or aluminum only)	Metal	Temperature to 1200 degrees F.
L-1	Latex	Concrete, masonry, plaster, gypsum board	Interior and Exterior including existing exterior coated concrete.
L-2	Latex	PVC and CPVC pipe	Exterior, direct sunlight exposure.
L-3	Latex-Direct to Metal	Ferrous Metal	Interior or Exterior
L-4	Latex	Wood	Interior
M-1	Petrolatum based mastic or wax based wrapping tapes	Metal	Below grade (buried) or where little to no surface preparation can be performed on piping or structural steel.
M-2	Epoxy mastic or equal	Ferrous Metal	Interior, corrosive environment, confined enclosures, where minimal surface preparation is possible.
EU-1	Zinc-epoxy-polyurethane system	Ferrous Metal	Exterior, exposed to direct sunlight, moderately corrosive non-immersed.

Coating System ID	Coating Material	Surface	Service Condition
EU-1-FRP	Specialty Primer plus Polyurethane Finish Coat	Exterior of FRP pipe and tanks, etc.	Exterior, exposed to direct sunlight, non-immersed.
EC-1	Hybrid Polyurethane	Concrete or dense masonry where existing crack or joint movement is suspected of propagating through rigid cured epoxy coatings	Service Condition: Interior or exterior, exposed to direct sunlight or not, corrosive (immersion pH 4.0 or lower and/or headspace pH 4.0 or lower and/or gaseous H_2S concentrations between 10 and 150 ppm typically.)
EC-2 (NSF-61)	Modified Polyurethane	Concrete or dense masonry where existing crack or joint movement is suspected due to thermal conditions and would propagate through rigid epoxy coating systems and/or where NSF-61 certification is required	425. Interior or exterior, submerged or non-submerged indirect sunlight – moderately corrosive.
S-1	Penetrating acrylic stain, color required	Concrete	Non-immersed, exposure to moisture and sunlight.
S-2	426. Silane/Siloxane or Blended Sealer	Concrete Floors	Wet, non-immersed, non-corrosive. Interior or exterior for waterproofing.
S-3	427. RTV Silicone Rubber Based Sealer	Concrete or Masonry Walls	Exterior or Interior – Weathering Exposure, Non-Corrosive.
S-4	428. Acrylic Co-polymer Blend	Concrete Floors	Wet, non-immersed, non-corrosive, interior for oil and water repellent.

3.05 COATING SYSTEM SPECIFICATION SHEETS (COATSPEC)

Coating System Identification: E-1

Coating Material: Epoxy

Surface: Metal

Service Condition: Interior; exterior, covered, not exposed to direct sunlight, non-corrosive exposure.

Surface Preparation:

General: Shop primed surfaces which are to be incorporated in the work shall be prepared in the field by cleaning surfaces in accordance with SSPC SP-2 (Hand Tool Cleaning). Damaged shop coated areas shall be cleaned in accordance with SSPC SP-5 (White Metal Blast Cleaning) to achieve a uniform surface profile of 2.0 to 2.5 mils and

spot primed with the primer specified. Shop epoxy primed surfaces shall require light abrasive and vacuum cleaning blasting prior to receiving finish coats.

Ferrous Metal: Bare ferrous metal surfaces shall be prepared in accordance with SSPC SP-6 (Commercial Blast Cleaning) to achieve a uniform, surface profile of 2.0 to 2.5 mils.

Ferrous metal with rust bleeding shall be cleaned in accordance with SSPC SP-1 (Solvent Cleaning). Areas of rust penetration shall be spot blasted to SSPC SP-10 (Near White Blast) (to achieve the 2.0- to 2.5-mil surface profile) and spot primed with the specified primer. For ductile iron surfaces, refer to the requirements in paragraph 09900-3.02 D.

Nonferrous and Galvanized Metal: Nonferrous and galvanized metal shall be prepared in accordance with SSPC SP-7 (Brush-off Blast Cleaning) to achieve uniform, minimum surface profile 1.0 to 1.5 mils.

3.05 COATING SYSTEM SPECIFICATION SHEETS (COATSPEC)

Coating System Identification: E-1 (continued)

Application: Field

General: Prime coat may be thinned and applied as recommended by the CSM, provided the coating as applied complies with prevailing air pollution control regulations.

Ferrous Metal: Prime coats shall be an epoxy primer compatible with the specified finish coats and applied in accordance with the written instructions of the CSM.

Nonferrous and Galvanized Metal: Nonferrous and galvanized metal shall be cleaned prior to the application of the prime coat in accordance with SSPC SP-1 (Solvent Cleaning).

System Thickness: 10 mils dry film.

Coatings:

Primer: One coat at CSM's recommended dry film thickness.

Finish: One or more coats at CSM's recommended dry film thickness per coat to achieve the specified system thickness.

3.05 COATING SYSTEM SPECIFICATION SHEETS (COATSPEC)

Coating System Identification: E-1-G

Coating Material: Epoxy

Surface: Galvanized Steel

Service Condition: Interior; exterior, covered, non-corrosive exposure. Do not use in immersion service.

Surface Preparation:

General: Damaged galvanized steel areas with exposed ferrous metal and/or rusted shall be cleaned in accordance with SSPC SP-5 (White Metal Blast Cleaning) or Power Tool Cleaned to Bare Metal in accordance with SSPC-SP-11 to achieve a uniform 1.0- to 1.5-milprofile and spot primed with the primer specified.

Galvanized Metal: Nonferrous and galvanized metal shall be prepared in accordance with SSPC SP-7 (Brush-off Blast Cleaning) impart a 1- to 2-milprofile to the galvanized steel surfaces. Where this cannot be performed, prepare by abrading in accordance with SSPC-SP-3, Power Tool Cleaning to impart a 1.0- to 1.5-mil profile uniformly to the galvanized steel surfaces.

Application: Field

General: Prime coat may be thinned and applied as recommended by the CSM, provided the coating as applied complies with prevailing air pollution control regulations.

Galvanized Metal: Nonferrous and galvanized metal shall be cleaned prior to the application of the prime coat in accordance with SSPC SP-1 (Solvent Cleaning).

System Thickness: 5 to 8 mils dry film.

3.05 COATING SYSTEM SPECIFICATION SHEETS (COATSPEC)

Coating System Identification: E-1-G (continued)

Coatings:

Primer: One coat at CSM's recommended dry film thickness.

Finish: One or more coats at CSM's recommended dry film thickness per coat to the specified system thickness.

If the coated galvanized steel is to be exposed to ultraviolet light, apply one polyurethane top coat from coating system EU-1 over the second coat of the two epoxy coats specified.

3.05 COATING SYSTEM SPECIFICATION SHEETS (COATSPEC)

Coating System Identification: E-2

Coating Material: Epoxy

Surface: Metal

Service Condition: Immersed, nonpotable; non-immersed, moderately corrosive environment, color required.

Surface Preparation:

Ferrous Metal: Ferrous metal surfaces shall be prepared in accordance with SSPC SP-5 (White Metal Blast Cleaning) to achieve a uniform surface profile of 2.0 to 2.5 mils.

Damaged shop coating shall be cleaned in accordance with SSPC SP-5 (White Metal Blast Cleaning) and vacuum cleaning and spot primed with the primer specified. Shop epoxy primed surfaces shall require light abrasive blasting or abrading prior to receiving finish coats if the maximum recoat time for the primer has been exceeded. This cleaning must produce a uniform 1.0- to 1.5-mil profile in the intact shop primer. For ductile iron surfaces, refer to the requirements in paragraph 09900-3.02 D.

Nonferrous and Galvanized Metal: Nonferrous and galvanized metal shall be prepared in accordance with SSPC SP-7 (Brush-off Blast Cleaning) to achieve a uniform surface profile of 1.0 to 1.5 mils. Galvanized steel with this E-2 coating system shall not be used in immersion service in wastewater.

Application: Field

General: Prime coat may be thinned and applied as recommended by the CSM, provided the coating as applied complies with prevailing air pollution control regulations.

Ferrous Metal: Prime coat shall be an epoxy primer compatible with the specified finish coats.

3.05 COATING SYSTEM SPECIFICATION SHEETS (COATSPEC)

Coating System Identification: E-2 (continued)

Nonferrous and Galvanized Metal: Nonferrous and galvanized metal, non-immersed, shall be coated prior to the application of the prime coat with a grease emulsifying agent in accordance with the CSM's written instructions. Nonferrous metal to be immersed shall not be painted. Galvanized metal shall not be immersed even if it is painted.

System Thickness: 16 mils dry film.

Coatings:

Primer: One coat at CSM's recommended dry film thickness.

Finish: Two or more coats at CSM's recommended dry film thickness per coat to the specified system thickness.

3.05 COATING SYSTEM SPECIFICATION SHEETS (COATSPEC)

Coating System Identification: E-3

Coating Material: Epoxy

Surface: Concrete or masonry

Service Condition: Immersed, nonpotable; non-immersed, corrosive environment, color required.

Surface Preparation:

Concrete: Concrete surfaces shall be allowed to cure for at least 28 days and allowed to dry to the moisture content recommended by the CSM before coating work proceeds. Moisture content may be tested by the Construction Manager with a Delmhorst Instrument Company moisture detector, or equal. Except as otherwise specified, loose concrete, form oils, surface hardeners, curing compounds, and laitance shall be removed from surfaces by abrasive blasting and chipping, and voids and cracks shall be repaired as specified in Section 03300. Surface preparation can be performed by abrasive blast cleaning or water blast cleaning and must achieve a uniform concrete surface profile of CSP3 in accordance with ICRI 03732. After cleaning, air voids or bugholes in the concrete shall

be filled with a surfacer or block filler compatible with the specified primer and finish coats.

Masonry: Masonry surfaces shall be allowed to cure for at least 28 days after being constructed and be allowed to dry to the moisture content recommended by the CSM. Holes or other joint defects shall be filled with a material compatible with the primers and finish coats or shall be filled with masonry mortar that shall cure for at least 28 days. Loose or splattered mortar shall be removed by scraping and chipping.

Masonry surfaces shall be cleaned with clear water by washing and scrubbing to remove foreign, loose, and deleterious substances.

3.05 COATING SYSTEM SPECIFICATION SHEETS (COATSPEC)

Coating System Identification: E-3 (continued)

Muriatic acid shall not be used. After cleaning, masonry surfaces shall be sealed or filled with a sealer or block filler compatible with the specified primer.

Application: Field

Apply filler/surfacer as recommended by CSM to fill bugholes and air voids or block texture, etc. leaving a uniformly filled surface that does not produce blowholes or outgassing causing pinholing of the coating system. Filler/surfacers shall dry a minimum of 48 hours prior to application of prime coat or as required by the CSM.

Prime coat shall be thinned and applied as recommended by the CSM, provided the coating as applied complies with prevailing air pollution control regulations.

Drying time between coats shall be as recommended by CSM.

System Thickness: 15 mils dry film.

Coatings:

Primer: One coat at CSM's recommended dry film thickness.

Finish: Two or more coats at CSM's recommended dry film thickness per coat to the specified system thickness.

3.05 COATING SYSTEM SPECIFICATION SHEETS (COATSPEC)

Coating System Identification: E-4

Coating Material: Epoxy

Surfaces: Concrete, masonry, plaster, gypsum board.

Service Condition: Interior

Surface Preparation:

Concrete: Concrete surfaces shall be allowed to age for at least 28 days and allowed to dry to the moisture content recommended by the CSM. Moisture content may be tested by the Construction Manager with a Delmhorst Instrument Company moisture detector, or equal. Loose concrete, form oils, surface hardeners, curing compounds and laitance shall be removed from surfaces, and voids and cracks shall be repaired as specified in Section 03300. Surface preparation shall produce a concrete surface profile of CSP-2 in accordance with ICRI 03732. After cleaning, air voids or bugholes in the concrete shall be filled with a surfacer or block filler compatible with the specified primer and finish coats.

Masonry: Masonry surfaces shall be allowed to age for at least 28 days. Holes or other joint defects shall be filled with mortar and repointed. Loose or splattered mortar shall be removed by scrapping and chipping. Masonry surfaces shall be cleaned with clear water by washing and scrubbing to remove foreign and deleterious substances. Muriatic acid shall not be used. After cleaning, exterior masonry surfaces shall be sealed or filled with a sealer or block filler compatible with the specified primer.

Plaster: Plaster surfaces shall be dry, clean, and free from grit, loose plaster, and surface irregularities. Cracks and holes shall be repaired with acceptable patching materials, keyed to existing surfaces, and sandpapered smooth. Surfaces shall be cleaned with clean water by washing and scrubbing to remove foreign and deleterious substances.

3.05 COATING SYSTEM SPECIFICATION SHEETS (COATSPEC)

Coating System Identification: E-4 (continued)

Application: Field

Block Filler shall be multiple component epoxy block filler or an acrylic based or waterborne epoxy based block filler and shall dry a minimum of 48 hours prior to primer application or as required by the CSM.

Prime coat shall be thinned and applied as recommended by CSM, provided the coating as applied complies with prevailing air pollution control regulations.

Drying time between coats shall be as recommended by CSM.

System Thickness: 10 mils dry film, excluding block filler and sealer.

Coatings:

Primer: One coat at CSM's recommended dry film thickness.

Finish: One or more coats at CSM's recommended dry film thickness per coat to the specified system thickness.

3.05 COATING SYSTEM SPECIFICATION SHEETS (COATSPEC)

Coating System Identification: E-5 (NSF 61 certified)

Coating Material: Epoxy

Surface: Metal

Service Condition: Interior potable water tanks and reservoirs and other metal components in contact with water being treated and stored for potable use.

Surface Preparation:

Ferrous Metal: Ferrous metal surfaces shall be prepared in accordance with SSPC SP-5 (White Metal Blast Cleaning) to achieve a uniform surface profile of 2.0 to 2.5 mils.

Shop primed surfaces which are to be incorporated in the work shall be prepared in the field by cleaning surfaces in accordance with SSPC SP-2 (Hand Tool Cleaning) or SSPC-SP-3 (Power Tool Cleaning). Damaged shop coating shall be cleaned in accordance with SSPC SP-5 (White Metal Blast Cleaning) and spot primed with the primer specified. Cleaning shall produce a surface profile of 2.0 to 2.5 mils. Shop epoxy primed surfaces shall require light abrasive blasting or abrading prior to receiving finish coats if the maximum recoat limit has been exceeded

for the primer. This cleaning shall produce a uniform surface profile of 1.0 to 1.5 mils in the intact primer.

Nonferrous and Galvanized Metal: Nonferrous and galvanized metal shall be prepared in accordance with SSPC SP-7 (Brush-off Blast Cleaning) to achieve a 1.0- to 1.5-mil profile that is uniform.

Application: Field

General: Prime coat shall be thinned and applied as recommended by the CSM, provided the coating as applied complies with prevailing air pollution control regulations.

Ferrous Metal: Prime coat shall be an epoxy primer compatible with the specified finish coats.

3.05 COATING SYSTEM SPECIFICATION SHEETS (COATSPEC)

Coating System Identification: E-5 (NSF 61 certified) (continued)

Nonferrous and Galvanized Metal: Nonferrous and galvanized metal above the high water elevation shall be cleaned prior to the application of the prime coat in accordance with SSPC SP-1 (Solvent Cleaning).

System Thickness: 10 mils dry film.

Coatings:

Primer: One coat at the CSM's recommended dry film thickness.

Finish: One or more coats at CSM's recommended dry film thickness per coat to the specified system thickness.

3.05 COATING SYSTEM SPECIFICATION SHEETS (COATSPEC)

Coating System Identification: E-6 (NSF 61 certified)

Coating Material: Epoxy

Surface: Concrete

Service Condition: Interior potable water tanks and reservoirs and other metal components in contact with water being treated or stored.

Surface Preparation:

Concrete: Concrete surfaces shall be allowed to cure for at least 28 days and allowed to dry to the moisture content recommended by the CSM. Moisture content may be tested by the Construction Manager with a Delmhorst Instrument Company moisture detector, or equal. Except as otherwise specified, loose concrete, form oils, surface hardeners, curing compounds, and laitance shall be removed from surfaces by abrasive blasting and chipping, and voids and cracks shall be repaired as specified in Section 03300. Abrasive blast cleaning or water blast cleaning methods can be used and must produce a uniform concrete surface profile of a CSP-3 in accordance with ICRI 03732. After cleaning, air voids or bugholes in the concrete shall be filled with a surfacer or block filler compatible with the specified primer and finish coats.

Masonry: Masonry surfaces shall be allowed to cure for at least 28 days. Holes or other joint defects shall be filled with mortar and repointed and allowed to cure for 28 days or shall be filled with materials compatible with the primer and finish coats. Loose or splattered mortar shall be removed by scraping and chipping.

Masonry surfaces shall be cleaned with clear water by washing and scrubbing to remove foreign and deleterious substances.

Muriatic acid shall not be used. After cleaning, masonry surfaces shall be sealed or filled with a sealer or block filler compatible with the specified primer.

3.05 COATING SYSTEM SPECIFICATION SHEETS (COATSPEC)

Coating System Identification: E-6 (NSF 61 certified) (continued)

Application: Field

Surfacer or block filler shall dry a minimum of 48 hours prior to application of prime coat or as recommended by the CSM. Prime coat shall be thinned and applied as recommended by the CSM, provided the coating as applied complies with prevailing air pollution control regulations.

Drying time between prime coat and finish coat shall be as recommended by CSM.

System Thickness: 15 mils dry film.

Coatings:

Primer: One coat at CSM's recommended dry film thickness.

Finish: Two or more coats at CSM's recommended dry film thickness per coat to the specified system thickness.

3.05 COATING SYSTEM SPECIFICATION SHEETS (COATSPEC)

Coating System Identification: E-7

Coating Material: Epoxy

Surface: Plastic

Service Condition: Interior; exterior covered, not exposed to direct sunlight.

Surface Preparation: Plastic shall be prepared in accordance with SSPC SP-1 (Solvent Cleaning) and light sanding to produce a uniform surface roughness(uniform surface profile of 1.0 to 1.5 mils) on the plastic.

Application: Field

System Thickness: 5 mils dry film.

Coatings: One or more coats at CSM's recommended dry film thickness per coat to the specified system thickness.

3.05 COATING SYSTEM SPECIFICATION SHEETS (COATSPEC)

Coating System Identification: E-8

Coating Material: Clear epoxy

Surface: Wood

Service Condition: Interior

Surface Preparation: Wood surfaces shall be cleaned of dirt, oil or other foreign substances with mineral spirits, scrapers, sandpaper or wire brush. Finished surfaces exposed to view shall be smoothed by planing or sandpapering. Millwork shall be sandpapered and given a coat of the specified exterior primer on sides before installation. Built-in surfaces of windowsills shall be double primed. Glazing rabbets and beads in exterior sash and doors shall be double primed. Small, dry, seasoned knots shall be surfaced scraped,

sandpapered, and thoroughly cleaned and shall be given a thin coat of a clear knot sealer before application of the priming coat. Large, open, unseasoned knots, and beads or streaks of pitch shall be scraped off; however, if the pitch is still soft, it shall be removed with mineral spirits or turpentine, and the resinous area shall be coated with knot sealer prior to priming. After priming, holes and imperfections shall be filled with putty or plastic wood, colored to match the finish coat, allowed to dry and sandpapered smooth.

Application: Field

Prime coat shall be thinned and applied as recommended by the CSM, provided the coating as applied complies with prevailing air pollution control regulations.

System Thickness: 4 mils

Coatings:

Primer: One coat at CSM's recommended dry film thickness.

Finish: One or more coats at CSM's recommended dry film thickness per coat to the specified system thickness.

3.05 COATING SYSTEM SPECIFICATION SHEETS (COATSPEC)

Coating System Identification: E-9

Coating Material: Epoxy

Surface: Metal

Service Condition: Immersed, nonpotable; non-immersed, corrosive environment, color required. (Not for Biogenic Sulfide Corrosion areas.)

Surface Preparation:

Ferrous Metal: Ferrous metal surfaces shall be prepared in accordance with SSPC SP-5 (White Metal Blast Cleaning) to achieve a uniform surface profile of 2.5 to 3.0 mils.

Shop primed surfaces which are to be incorporated in the work shall be prepared in the field by cleaning surfaces in accordance with SSPC SP-2 (Hand Tool Cleaning) or SSPC-SP-3 (Power Tool Cleaning). Damaged shop coating shall be cleaned in accordance with SSPC SP-5 (White Metal Blast Cleaning) to achieve a uniform surface

profile of 2.5 to 3.0 mils and spot primed with the primer specified. Shop epoxy primed surfaces shall require light abrasive blasting or abrading to achieve a uniform surface profile of 1.0 to 1.5 mils in the intact shop primer prior to receiving finish coats if the maximum recoat time for the primer has been exceeded. For ductile iron surfaces, refer to the requirements in paragraph 09900-3.02 D.

Nonferrous and Galvanized Metal: Nonferrous and galvanized metal shall be prepared in accordance with SSPC SP-7 (Brush-off Blast Cleaning) to achieve a 1.5- to 2.0-mil profile that is uniform. Galvanized steel with this E-2 coating system shall not be used in immersion service in wastewater.

Application: Field

General: Prime coat may be thinned and applied as recommended by the CSM, provided the coating as applied complies with prevailing air pollution control regulations.

3.05 COATING SYSTEM SPECIFICATION SHEETS (COATSPEC)

Coating System Identification: E-9 (continued)

Ferrous Metal: Prime coat shall be an epoxy primer compatible with the specified finish coats.

Nonferrous and Galvanized Metal: Nonferrous and galvanized metal, non-immersed, shall be coated prior to the application of the prime coat with a grease emulsifying agent in accordance with the CSM's written instructions. Non-ferrous metal to be immersed shall not be painted. Galvanized metal shall not be immersed even if it is painted with this coating system.

System Thickness: 15 to 20 mils dry film.

Coatings:

Primer: One coat at CSM's recommended dry film thickness.

Finish: Two or more coats at CSM's recommended dry film thickness per coat to the specified system thickness.

3.05 COATING SYSTEM SPECIFICATION SHEETS (COATSPEC)

Coating System Identification: E-9-C

Coating Material: Epoxy

Surface: Concrete or masonry

Service Condition: Immersed, nonpotable; non-immersed, moderately corrosive environment, color required. (Not for Biogenic Sulfide Corrosion areas.)

Surface Preparation:

Concrete: Concrete surfaces shall be allowed to cure for at least 28 days following initial concrete placement and allowed to dry to the moisture content recommended by the CSM before coating work proceeds. Moisture content may be tested by the Construction Manager with a Delmhorst Instrument Company moisture detector, or equal. Except as otherwise specified, loose concrete, form oils, surface hardeners, curing compounds, and laitance shall be removed from surfaces by abrasive blasting and chipping, and voids and cracks shall be repaired as specified in Section 03300. Cleaning can be performed using abrasive blast cleaning or water blast cleaning methods to produce a minimum concrete surface profile of CSP-3 in accordance with ICRI 03732. After cleaning, all air voids or bugholes in the concrete shall be filled with a surfacer or block filler compatible with the specified primer and finish coats.

Masonry: Masonry surfaces shall be allowed to cure for at least 28 days after being constructed and be allowed to dry to the moisture content recommended by the CSM. Holes or other joint defects shall be filled with a material compatible with the primers and finish coats or shall be filled with masonry mortar that shall cure for at least 28 days. Loose or splattered mortar shall be removed by scraping and chipping.

Masonry surfaces shall be cleaned with clear water by washing and scrubbing to remove foreign and deleterious substances.

3.05 COATING SYSTEM SPECIFICATION SHEETS (COATSPEC)

Coating System Identification: E-9-C (continued)

Muriatic acid shall not be used. After cleaning, masonry surfaces shall be sealed or filled with a sealer or block filler compatible with the specified primer.

Application: Field

Apply filler/surfacer as recommended by CSM to fill bugholes and air voids or block texture, etc. leaving a uniformly filled surface that does not produce blowholes or outgassing causing pinholing of the coating system.

Filler/Surfacers shall dry a minimum of 48 hours prior to application of prime coat or as required by the CSM.

Prime coat shall be thinned and applied as recommended by the CSM, provided the coating as applied complies with prevailing air pollution control regulations.

Drying time between coats shall be as recommended by CSM.

System Thickness: 16 to 20 mils dry film.

Coatings:

Primer: One coat at CSM's recommended dry film thickness.

Finish: Two or more coats at CSM's recommended dry film thickness per coat to the specified system thickness.

3.05 COATING SYSTEM SPECIFICATION SHEETS (COATSPEC)

Coating System Identification: E-10

Coating Material: Polyamidoamine epoxy

Surface: Metal or concrete

Service Condition: Below grade (buried, exterior) in contact with soil

Surface Preparation:

Ferrous Metal: Ferrous metal surfaces shall be prepared in accordance with SSPC SP-5 (White Metal Blast Cleaning).

Nonferrous Metal: Nonferrous and galvanized metal shall be prepared in accordance with SSPC SP-7 (Brush-off Blast Cleaning) to achieve a uniform surface profile of 2.0 to 2.5 mils.

Concrete: Concrete surfaces shall be allowed to age for at least 28 days and allowed to dry to the moisture content recommended by the CSM. Moisture content may be tested by the Construction Manager with a Delmhorst Instrument Company moisture detector, or equal. Except as otherwise specified, loose concrete and laitance shall be removed from surfaces by abrasive blasting and

chipping, and voids and cracks shall be repaired as specified in Section 03300. Concrete surface preparation can be performed using abrasive blast cleaning or water blast cleaning methods and must achieve a concrete surface profile of CSP-3 in accordance with ICRI 03732.

Application: Field

System Thickness: 16 mils

Coating: Two or more coats at CSM's recommended dry film thickness per coat to the specified system thickness.

3.05 COATING SYSTEM SPECIFICATION SHEETS (COATSPEC)

Coating System Identification: EF-1

Coating Material: Epoxy Resin Based Floor Coating

Surface: Concrete Floors

Service Condition: For interior light duty applications light wheel traffic, mostly foot traffic, and mildly corrosive. Mainly for wear resistance, aesthetics, and cleanability. Non-slip texture can be varied depending on wetness of exposure. Test patches to be installed for deciding on level of non-slip texture required.

Surface Preparation: Concrete floor slabs shall be allowed to age for at least 28 days and must meet a moisture vapor transmission rate of less than 3.0 lbs. of moisture per 24 hours per 1,000 SF in accordance with ASTM F1869. It is also essential that a well-sealed and intact vapor barrier has been installed beneath all slabs on grade to receive this floor coating system. Except as otherwise specified, loose concrete, curing compounds, and laitance shall be removed by abrasive blast cleaning or preferably by shotblasting. Surface preparation shall produce a clean sound concrete substrate with a concrete surface profile of CSP-6 minimum in accordance with ICRI 03732. Surface preparation shall be in accordance with SSPC-SP-13.

Additionally, all coating termination and transition details shall be prepared in accordance with the CSM’s standard detail drawings. This includes coating termination details, coating transitions at vertical and vertical to horizontal corners, coating terminations at joints, concrete crack treatment, pipe penetration treatment, coating terminations at metal embedments in the concrete substrate, and other details. The CSM’s standard detail drawings shall be

submitted for all such coating applications. If standard details are not available for a given detail treatment, the CSM shall be required to produce one at no additional cost to the owner, the engineer, or any other party.

3.05 COATING SYSTEM SPECIFICATION SHEETS (COATSPEC)

Coating System Identification: EF-1 (continued)

If wet abrasive or water blasting surface preparation methods were used, the concrete substrate shall be allowed to dry under warm conditions (minimum of 75 degrees F) for at least 5 days prior to coating application. Following surface preparation work and dry-out, all surfaces to be coated shall be vacuum cleaned to remove all loose dirt, dust, or other loose materials.

Application: Carefully follow CSM's written instructions regarding mixing, thinning, application, recoat limitations (windows) and curing of coating materials.

System Thickness: 125 mils dry film.

Coatings: Primer Coat – Brush or roller apply at 6.0 – 10.0 mils DFT.

Broadcast Applied Coat – Brush or roller catalyzed resin and broadcast aggregate to rejection (should achieve 100 to 105 mils DFT).

Topcoat – brush or roller apply at 8.0 – 10.0 mils.

Total System DFT = 125 mils

Install all termination and transition details in accordance with the CSM's detail drawings.

3.05 COATING SYSTEM SPECIFICATION SHEETS (COATSPEC)

Coating System Identification: EF-2

Coating Material: Epoxy Resin Based Floor Coating

Surface: Concrete Floors

Service Condition: For interior – heavy-duty exposure applications. Frequent, heavy wheeled traffic and moderately corrosive exposure conditions. Mainly for wear resistance, impact resistance, protection of concrete, and aesthetics. Non-slip texture

can be varied as needed. Test patches to be installed for deciding on level of non-slip texture required.

Surface Preparation: Concrete floor slabs shall be allowed to age for at least 28 days and must meet a moisture vapor transmission rate of less than 3.0 lbs. of moisture per 24 hours per 1,000 SF in accordance with ASTM F1869. It is also essential that a well-sealed and intact vapor barrier has been installed beneath all slabs on grade to receive this floor coating system. Except as otherwise specified, loose concrete, curing compounds, and laitance shall be removed by abrasive blast cleaning or preferably by shotblasting. Surface preparation shall produce a clean sound concrete substrate with a concrete surface profile of CSP-7 minimum in accordance with ICRI 03732. Surface preparation shall be in accordance with SSPC-SP-13.

Additionally, all coating termination and transition details shall be prepared in accordance with the CSM's standard detail drawings. This includes coating termination details, coating transitions at vertical and vertical to horizontal corners, coating terminations at joints, concrete crack treatment, pipe penetration treatment, coating terminations at metal embedments in the concrete substrate, and other details. The CSM's standard detail drawings shall be submitted for all such coating applications. If standard details are not available for a given detail treatment, the CSM shall be required to produce one at no additional cost to the owner, the engineer, or any other party.

3.05 COATING SYSTEM SPECIFICATION SHEETS (COATSPEC)

Coating System Identification: EF-2 (continued)

If wet abrasive or water blasting surface preparation methods were used, the concrete substrate shall be allowed to dry under warm conditions (minimum of 75 degrees F) for at least 5 days prior to coating application. Following surface preparation work and dry-out, all surfaces to be coated shall be vacuum cleaned to remove all loose dirt, dust, or other loose materials.

Application: Carefully follow CSM's written instructions regarding mixing, thinning, application, recoat limitations (windows) and curing of coating materials.

System Thickness: 250 mils dry film.

Coatings: Primer Coat – Brush or roller apply at 6.0 – 10.0 mils DFT.

Trowel Applied Coat – Trowel apply to 230 – 236 mils.

Topcoat – brush or roller apply at 8.0 – 10.0 mils. Cumulative dry film thickness.

Total System Thickness is 250 mils.

Install all termination and transition details in accordance with the CSM's detail drawings.

3.05 COATING SYSTEM SPECIFICATION SHEETS (COATSPEC)

Coating System Identification: EA-1

Coating Material: Blended Amine Cured Epoxy

Surface: Metal

Service Condition: Immersed, nonpotable; non-immersed, corrosive environment, color not required especially for headspace environments that are corrosive due to biogenic sulfide corrosion.

Surface Preparation:

Ferrous Metal: Ferrous metal surfaces shall be prepared in accordance with SSPC SP-5 (White Metal Blast Cleaning) to achieve a uniform surface profile of 3.0 to 3.5 mils. Blast Cleaning shall produce a minimum surface profile of 3.0 mils.

Shop primed surfaces which are to be incorporated in the work shall be prepared in the field by cleaning surfaces in accordance with SSPC SP-11 (Power Tool Cleaning to Bare Metal). Damaged shop coated areas shall be cleaned in accordance with SSPC SP-5 (White Metal Blast Cleaning) and spot primed with the primer specified. Shop epoxy primed surfaces shall require light abrasive blasting and blow down cleaning prior to receiving finish coats. Cast or ductile iron surfaces to be coated shall be abrasive blast cleaned to a clean, gray uniform metal appearance free of variations in color and loose materials. Ductile iron surfaces shall be prepared in accordance with paragraph 09900-3.02 D.

Nonferrous and Galvanized Metal: Nonferrous and galvanized metal shall be prepared in accordance with SSPC SP-7 (Brush-off Blast Cleaning) to achieve a uniform surface profile of 2.0 to 2.5 mils. Galvanized metal should generally not be used in these environments.

3.05 COATING SYSTEM SPECIFICATION SHEETS (COATSPEC)

Coating System Identification: EA-1 (continued)

Application: Field

General: Prime coat may be thinned and applied as recommended by the CSM, provided the coating as applied complies with prevailing air pollution control regulations.

Drying time between coats shall be as specified by the CSM for the site conditions. If the maximum recoat time is exceeded, surface preparation shall require solvent washing, light abrasive blasting, or other procedures per CSM's instructions.

Ferrous Metal: If shop priming is required or field priming is necessary, the prime coat shall be an epoxy primer compatible with the specified coating system. Generally, the EA-1 coating system is self-priming and does not require a primer unless there is a special reason to prime the steel to hold the blast cleaning from rusting back.

System Thickness: 30 to 40 mils dry film.

Coatings:

Primer: One coat at CSM's recommended dry film thickness only if required by special circumstances.

Finish: One or more coats at CSM's recommended dry film thickness per coat to the specified system thickness.

Testing: Holiday detection shall be performed over 100% of the coated surface area to identify any holidays or pinholes that must be repaired.

Pinhole and Holiday Repair Procedure: Pinholes and holidays identified by Holiday Detection shall be repaired as follows:

- Using a pencil grinder, remove a ½-inch diameter area of the coating system material back to the ferrous metal substrate. The metal must be shiny.

3.05 COATING SYSTEM SPECIFICATION SHEETS (COATSPEC)

Coating System Identification: EA-1 (continued)

- Aggressively sand or abrade the intact coating system surface 2 inches around the complete periphery of the ½-inch diameter removal area to produce a uniform 6 to 8 mils profile.

- Vacuum clean the prepared area to remove all dust and dirt to achieve a clean, sound surface. Tape the peripheral area to prevent coating application onto unprepared surfaces.

- Brush apply one coat of the finish coating material. Following proper recoat cure time, apply additional coats of the finish coating system to achieve 60 mils DFT at the coating removal area and feather the coating onto the roughened coated surfaces to form a neat repair outline.

3.05 COATING SYSTEM SPECIFICATION SHEETS (COATSPEC)

Coating System Identification: EA-2

Coating Material: Blended Amine Cured Epoxy

Surface: Concrete or masonry

Service Condition: Immersed, nonpotable; non-immersed, corrosive environment, color not required, new construction especially for headspace environments that are corrosive due to biogenic sulfide corrosion.

Surface Preparation: All coating termination and transition details shall be prepared in accordance with the CSM's standard detail drawings. This includes coating termination details, coating transitions at vertical and vertical to horizontal corners, coating terminations at joints, concrete crack treatment, pipe penetration treatment, coating terminations at metal embedments in the concrete substrate, and other details. The CSM's standard detail drawings shall be submitted for all such coating applications. If standard details are not available for a given detail treatment, the CSM shall be required to produce one at no additional cost to the owner, the engineer, or any other party.

If wet abrasive or water blasting surface preparation methods were used, the concrete substrate shall be allowed to dry under warm conditions (minimum of 75 degrees F) for at least 5 days prior to coating application. Following surface preparation work and dry-out, all surfaces to be coated shall be vacuum cleaned to remove all loose dirt, dust, or other loose materials.

3.05 COATING SYSTEM SPECIFICATION SHEETS (COATSPEC)

Coating System Identification: EA-2 (continued)

Concrete: Concrete surfaces shall be allowed to cure for at least 28 days and allowed to dry to the moisture content recommended by the CSM. Moisture content may be tested by the Construction Manager with a Delmhorst Instrument Company moisture detector, or equal. Except as otherwise specified, loose concrete, form oils, surface hardeners, curing compounds, and laitance shall be removed from surfaces by abrasive blasting and chipping, and voids and cracks shall be repaired as specified in Section 03300. Surface Preparation must open up all shelled over air voids or bugholes to expose fully the void's depth, width, and length. Concrete shall be abraded to achieve a uniform concrete surface profile of CSP-5 in accordance with ICRI 03732. After surface preparation has been accepted, a complete skim coat of the specified filler surfacer shall be applied over all concrete surfaces and all bugholes (air voids) shall be completely filled using this same material. The filler/surfacer material shall be applied as a complete parge coat of the substrate. If the parge coat (filler/surfacer material) is non-polymer modified, it must be brush blast cleaned following adequate cure per CSM's instructions to produce a uniform anchor pattern of CSP-4 in accordance with ICRI 03732 prior to coating application.

Masonry: Masonry surfaces shall be allowed to cure for at least 28 days. Holes or other joint defects shall be filled with mortar and repointed and allowed to cure for 28 days or shall be filled with a repair material compatible with the coating system that does not require hydration cure time. Loose or splattered mortar shall be removed by scrapping and chipping.

Masonry surfaces shall be cleaned with clear water by washing and scrubbing to remove foreign and deleterious substances.

3.05 COATING SYSTEM SPECIFICATION SHEETS (COATSPEC)

Coating System Identification: EA-2 (continued)

Muriatic acid shall not be used. After cleaning, masonry surfaces shall be skim coated with a surfacer or block filler compatible with the specified coating system.

Application: Field

Surfacer or filler shall be applied per CSM's recommendations prior to application of coating to fill all bugholes and voids and create a complete parge coat of the prepared substrate. This parge coat shall completely fill all bugholes and voids in the substrate, and will also completely cover the substrate unless specified otherwise above such filled voids by 1/8 inch (125 mils) of thickness.

Drying time between coats shall be as specified by the CSM for the site conditions. If the maximum recoat time is exceeded, surface preparation shall require solvent washing, light abrasive blasting, or other procedures per CSM's instructions.

System Thickness: 60 mils dry film in addition to the parge coat.

Coatings:

Finish: One or more coats at CSM's recommended dry film thickness per coat to the specified system thickness.

Testing: Holiday detection shall be performed over 100% of the coated surface area to identify any holidays or pinholes, which could compromise coating system performance. Holiday testing to be performed after application and adequate cure of the spray applied epoxy coating material.

Holiday detection shall be performed in accordance with NACE RP0188.

3.05 COATING SYSTEM SPECIFICATION SHEETS (COATSPEC)

Coating System Identification: EA-2 (continued)

Pinhole and Holiday Repair Procedure: Pinholes and holidays identified by Holiday Detection shall be repaired as follows:

- Using a grinder or other suitable power tool, remove the coating system at all pinholes or holidays in an area at least 2 inches in diameter or in both dimensions around the defect back to the concrete substrate.

- Chip out and remove the concrete to expose the full dimensions in all three directions of the air void responsible for the defect.

- Aggressively abrade or sand the intact coating system surface at least 3 inches beyond the removal area in all directions to produce a uniform 6- to 8-mil profile in the intact coating system.

- Vacuum clean the prepared area to remove all dust, dirt, etc. leaving clean sound surfaces.

- Tape to mask the periphery of the prepared intact coating area to prevent coating repair application onto the prepared area.

- Using a putty knife or other suitable tool, fill the opened void with the approved filler/surfacer material completely and strike-off. Allow to cure per CSM's recommendations.

- Apply the coating system in the number of coats necessary to achieve the specified 60 mils DFT over the defect and coating removal area and feather the coating onto the abraded coated surfaces around the removal area to avoid a lip and to achieve a neat repair outline. Allow to cure properly.

3.05 COATING SYSTEM SPECIFICATION SHEETS (COATSPEC)

Coating System Identification: EA-3

Coating Material: Blended Amine Cured Epoxy

Surface: Concrete or masonry

Service Condition: Immersed, nonpotable; non-immersed, corrosive environment, color not required, new or existing construction, especially for headspace environments that are corrosive due to biogenic sulfide corrosion.

Surface Preparation: All coating termination and transition details shall be prepared in accordance with the CSM's standard detail drawings. This includes coating termination details, coating transitions at vertical and vertical to horizontal corners, coating terminations at joints, concrete crack treatment, pipe penetration treatment, coating terminations at metal embedments in the concrete substrate, and other details. The CSM's standard detail drawings shall be submitted for all such coating applications. If standard details are not available for a given detail treatment, the CSM shall be required to produce one at no additional cost to the owner, the engineer, or any other party.

If wet abrasive or water blasting surface preparation methods were used, the concrete substrate shall be allowed to dry under warm conditions (minimum of 75 degrees F) for at least 5 days prior to coating application. Following surface preparation work and dry-out, all surfaces to be coated shall be vacuum cleaned to remove all loose dirt, dust, or other loose materials.

3.05 COATING SYSTEM SPECIFICATION SHEETS (COATSPEC)

Coating System Identification: EA-3 (continued)

Concrete: Concrete surfaces shall be allowed to age for at least 28 days and allowed to dry to the moisture content recommended by the CSM. Moisture content may be tested by the Construction Manager with a Delmhorst Instrument Company moisture detector, or equal. Except as otherwise specified, loose concrete, form oils, surface hardeners, curing compounds, and laitance shall be removed from surfaces by abrasive blasting and chipping, and voids and cracks shall be repaired as specified in Section 03300. Concrete shall be abraded also to achieve a uniform concrete surface profile of CSP 5 minimum. If the parge coat (filler/surfacer material) is non-polymer

modified, it shall be brush blasted following adequate cure per the CSM's instructions to produce a uniform concrete surface profile of CSP-4 in accordance with ICRI 03732 prior to coating application. After cleaning, air voids or bugholes in the concrete shall be filled with a surfacer or block filler. The filler/surfacer material shall be applied as a complete parge coat of the substrate.
For existing concrete that has been degraded, apply a skim coat of a surfacer or filler material to restore the substrate to a coatable condition. Be certain the filler surfacer material is compatible with the coating system.

Masonry: Masonry surfaces shall be allowed to age for at least 28 days. Holes or other joint defects shall be filled with mortar and repointed. Loose or splattered mortar shall be removed by scrapping and chipping.

Masonry surfaces shall be cleaned with clear water by washing and scrubbing to remove foreign and deleterious substances.

Muriatic acid shall not be used. After cleaning, masonry surfaces shall be sealed or filled with sealer or block filler compatible with the specified coating system.

3.05 COATING SYSTEM SPECIFICATION SHEETS (COATSPEC)

Coating System Identification: EA-3 (continued)

Application: Field

Surfacer or filler shall be applied and dry per CSM's recommendations prior to application of coating.

Drying time between filler/surfacer and coating system shall be as specified by the CSM for the site conditions. If the maximum recoat time is exceeded, surface preparation shall require solvent washing, light abrasive blasting, or other procedures per CSM's instructions. The parge coat shall completely fill all bugholes and voids in the substrate and it will also completely cover the substrate unless specified otherwise above such filled voids by 1/8 inch of thickness.

System Thickness: 125 mils dry film (or 1/8 inch) in addition to the parge coat.

Coatings:

Primer: Self-priming.

Finish: One coat at CSM's recommended dry film thickness – trowel applied.

Testing: Holiday detection shall be performed over 100% of the coated surface area to identify any holidays or pinholes that could compromise coating system performance. Holiday detection shall be performed after adequate cure of the spray applied epoxy coating material. Holiday detection shall be performed in accordance with NACE RP0188.

Pinhole and Holiday Repair Procedure: Pinholes and holidays identified by Holiday Detection shall be repaired as follows:

- Using a grinder or other suitable power tool, remove the coating system at all pinholes or holidays in an area at least 2 inches in diameter or in both dimensions around the defect back to the concrete substrate.

3.05 COATING SYSTEM SPECIFICATION SHEETS (COATSPEC)

Coating System Identification: EA-3 (continued)

- Chip out and remove the concrete to expose the full dimensions in all three directions of the air void responsible for the defect.

- Aggressively abrade or sand the intact coating system surface at least 3-inches beyond the removal area in all directions to produce a uniform 6- to 8-mil profile in the intact coating system.

- Vacuum clean the prepared area to remove all dust, dirt, etc. leaving clean sound surfaces.

- Tape to mask the periphery of the prepared intact coating area to prevent coating repair application onto the prepared area.

- Using a putty knife or other suitable tool, fill the opened void with the approved filler/surfacer material completely and strike-off. Allow to cure per CSM's recommendations.

- Apply the coating system in the number of coats necessary to achieve the specified 60 mils DFT over the defect and coating removal area and feather the coating onto the abraded coated surfaces around the

removal area to avoid a lip and to achieve a neat repair outline. Allow to cure properly.

3.05 COATING SYSTEM SPECIFICATION SHEETS (COATSPEC)

Coating System Identification: EA-4

Coating Material: Blended Amine Cured Epoxy

Surface: Concrete or masonry

Service Condition: Immersed, nonpotable; non-immersed, very corrosive environment, color not required, new or existing construction, especially for headspace environments that are very corrosive due to biogenic sulfide corrosion.

Surface Preparation: All coating termination and transition details shall be prepared in accordance with the CSM's standard detail drawings. This includes coating termination details, coating transitions at vertical and vertical to horizontal corners, coating terminations at joints, concrete crack treatment, pipe penetration treatment, coating terminations at metal embedments in the concrete substrate, and other details. The CSM's standard detail drawings shall be submitted for all such coating applications. If standard details are not available for a given detail treatment, the CSM shall be required to produce one at no additional cost to the owner, the engineer, or any other party.

If wet abrasive or water blasting surface preparation methods were used, the concrete substrate shall be allowed to dry under warm conditions (minimum of 75 degrees F) for at least 5 days prior to coating application. Following surface preparation work and dry-out, all surfaces to be coated shall be vacuum cleaned to remove all loose dirt, dust, or other loose materials.

3.05 COATING SYSTEM SPECIFICATION SHEETS (COATSPEC)

Coating System Identification: EA-4 (continued)

Concrete: Concrete surfaces shall be allowed to age for at least 28 days and allowed to dry to the moisture content recommended by the CSM. Moisture content may be tested by the Construction Manager with a Delmhorst Instrument Company moisture detector, or equal. Except as otherwise specified, loose concrete, form oils, surface hardeners, curing compounds, and laitance shall be removed from surfaces by abrasive blasting and chipping, and voids and cracks shall be repaired as specified in

Section 03300. Concrete shall be abraded also to achieve a uniform concrete surface profile of CSP 5 minimum. If the parge coat (filler/surfacer material) is non-polymer modified, it shall be brush blasted following adequate cure per the CSM's instructions to produce a uniform concrete surface profile of CSP-4 in accordance with ICRI 03732 prior to coating application. After cleaning, air voids or bugholes in the concrete shall be filled with a surfacer or block filler. The filler/surfacer material shall be applied as a complete parge coat of the substrate.

For existing concrete that has been degraded, apply a skim coat of a surfacer or filler material to restore the substrate to a coatable condition. Be certain the filler surfacer material is compatible with the coating system.

Masonry: Masonry surfaces shall be allowed to age for at least 28 days. Holes or other joint defects shall be filled with mortar and repointed. Loose or splattered mortar shall be removed by scrapping and chipping.

Masonry surfaces shall be cleaned with clear water by washing and scrubbing to remove foreign and deleterious substances.

Muriatic acid shall not be used. After cleaning, masonry surfaces shall be sealed or filled with sealer or block filler compatible with the specified coating system.

3.05 COATING SYSTEM SPECIFICATION SHEETS (COATSPEC)

Coating System Identification: EA-4 (continued)

Application: Field

Surfacer or filler shall be applied and dry per CSM's recommendations prior to application of coating.

Drying time between filler/surfacer and coating system shall be as specified by the CSM for the site conditions. If the maximum recoat time is exceeded, surface preparation shall require solvent washing, light abrasive blasting, or other procedures per CSM's instructions. The parge coat shall completely fill all bugholes and voids in the substrate and it will also completely cover the substrate unless specified otherwise above such filled voids by 1/8 inch of thickness.

System Thickness: 140 to 145 mils dry film in addition to the parge coat.

Coatings:

Primer:	Self-priming.
Troweled Coat:	One coat at CSM's recommended dry film thickness – trowel applied. (125 mils)
Finish (Glaze Coat):	15 to 20 mils dry.
Testing:	Holiday detection shall be performed over 100% of the coated surface area to identify any holidays or pinholes that could compromise coating system performance. Holiday detection shall be performed after application and adequate cure of the spray applied epoxy coating material. Holiday detection shall be performed in accordance with NACE RP0188.

3.05 COATING SYSTEM SPECIFICATION SHEETS (COATSPEC)

Coating System Identification: EA-4 (continued)

Pinhole and Holiday Repair Procedure: Pinholes and holidays identified by Holiday Detection shall be repaired as follows:

- Using a grinder or other suitable power tool, remove the coating system at all pinholes or holidays in an area at least 2 inches in diameter or in both dimensions around the defect back to the concrete substrate.
- Chip out and remove the concrete to expose the full dimensions in all three directions of the air void responsible for the defect.
- Aggressively abrade or sand the intact coating system surface at least 3-inches beyond the removal area in all directions to produce a uniform 6- to 8-mil profile in the intact coating system.
- Vacuum clean the prepared area to remove all dust, dirt, etc. leaving clean sound surfaces.
- Tape to mask the periphery of the prepared intact coating area to prevent coating repair application onto the prepared area.
- Using a putty knife or other suitable tool, fill the opened void with the approved filler/surfacer material

completely and strike-off. Allow to cure per CSM's recommendations.

- Apply the coating system in the number of coats necessary to achieve the specified 60 mils DFT over the defect and coating removal area and feather the coating onto the abraded coated surfaces around the removal area to avoid a lip and to achieve a neat repair outline. Allow to cure properly.

3.05 COATING SYSTEM SPECIFICATION SHEETS (COATSPEC)

Coating System Identification:	EA-5
Coating Material:	Novolac Epoxy Lining
Surface:	Concrete or masonry
Service Condition:	Chemical area process slabs, chemical loading and unloading areas, secondary spill containment areas for ferric chloride or 25% hydrofluorosilicic acid.
Surface Preparation:	All coating termination and transition details shall be prepared in accordance with the CSM's standard detail drawings. This includes coating termination details, coating transitions at vertical and vertical to horizontal corners, coating terminations at joints, concrete crack treatment, pipe penetration treatment, coating terminations at metal embedments in the concrete substrate, and other details. The CSM's standard detail drawings shall be submitted for all such coating applications. If standard details are not available for a given detail treatment, the CSM shall be required to produce one at no additional cost to the owner, the engineer, or any other party. If wet abrasive or water blasting surface preparation methods were used, the concrete substrate shall be allowed to dry under warm conditions (minimum of 75 degrees F) for at least 5 days prior to coating application. Following surface preparation work and dry-out, all surfaces to be coated shall be vacuum cleaned to remove all loose dirt, dust, or other loose materials.
Concrete:	Concrete surfaces shall be allowed to cure for at least 28 days and allowed to dry to the moisture content recommended by the CSM. Moisture content may be tested by the Construction Manager with a Delmhorst Instrument Company moisture detector, or equal. Except as otherwise specified, loose concrete, form oils, surface hardeners, curing compounds, and laitance shall be

removed from surfaces by abrasive blasting and chipping, and voids and cracks shall be repaired as specified in Section 03300. Surface Preparation must open up all shelled over air voids

3.05 COATING SYSTEM SPECIFICATION SHEETS (COATSPEC)

Coating System Identification: EA-5 (continued)

or bugholes to expose fully the void's depth, width, and length. Concrete shall be abraded to achieve a uniform concrete surface profile of CSP-5 in accordance with ICRI 03732. After surface preparation has been accepted, a complete skim coat of the specified filler surfacer shall be applied over all concrete surfaces and all bugholes (air voids) shall be completely filled using this same material. The filler/surfacer material shall be applied as a complete parge coat of the substrate. If the parge coat (filler/surfacer material) is non-polymer modified, it must be brush blast cleaned following adequate cure per CSM's instructions to produce a uniform anchor pattern of CSP-4 in accordance with ICRI 03732 prior to coating application.

Application: Field

Prime coat shall be applied as recommended by the CSM.

Surfacers or filler materials shall be trowel applied per CSM's recommendations. Work surfacer/filler into all voids to displace air and fill bugholes.

Surfacer/filler and prime coat thicknesses are in addition to the system thickness specified below.

System Thickness:

Primer: As recommended by the CSM.

Surfacer/Filler: 1/16-inch minimum thickness above plane of concrete to create a monolithic and pinhole free surface.

Surfacer or filler shall be applied per CSM's recommendations prior to application of coating system to fill all bugholes and voids and create a coatable surface by being applied as a complete 1/8 inch thick parge coat. This is for containment walls, curbs and bases and not for floor surfaces.

3.05 COATING SYSTEM SPECIFICATION SHEETS (COATSPEC)

Coating System Identification:	EA-5 (continued)
Base Coat Floor Surfaces:	For floor surfaces, the base coat shall be applied at thickness recommended by CSM and broadcast with aggregate to create a non-slip surface (texture to be as recommended by the CSM). Following application of the broadcast aggregate and removal of all excess aggregates, the base coat will be applied to encapsulate the non-slip aggregate embedded.
Base Coat and Saturation Coat:	For trench or sump surfaces and unloading areas, the base coat shall be applied to the thickness recommended by the CSM and then scrim cloth shall be embedded in it. Next, the same material will be applied as a saturation coat to encapsulate fully the scrim cloth. This shall be applied to the thickness recommended by the CSM.
Base Coat for Containment Wall and Base Surfaces:	For containment wall, curb, and equipment base surfaces shall be applied to the thickness recommended by the CSM.
Base Coat General:	The basecoat will be an aggregate filled coating as will the saturation coat. Both shall be applied in strict accordance with the CSM's recommendations. The aggregate used in these coating systems for hydrofluorosilica aggregates resistant to the HFS or fully encapsulated with resin to prevent attack of the silica aggregate.
Finish:	The finish coat or coats shall be applied to the thickness recommended by the CSM. All coating system thicknesses are in addition to the parge coat.
Testing:	Holiday detection shall be performed over 100% of the coated surface area to identify any holidays or pinholes that must be repaired. Holiday detection to be performed after proper application and cure of the coating system. Holiday detection to be performed in accordance with NACE RP0188.

3.05 COATING SYSTEM SPECIFICATION SHEETS (COATSPEC)

Coating System Identification: EA-5 (continued)

Pinhole and Holiday Repair Procedure: Pinholes or holidays identified by Holiday Detection shall be repaired as follows:

- Using a grinder or other suitable power tool, remove the coating system at all pinholes or holidays in an area at least 2 inches in diameter or in both dimensions around the defect back to the concrete substrate.

- Chip out and remove the concrete to expose the full dimensions in all three directions of the air void responsible for the defect.

- Aggressively abrade or sand the intact coating system surface at least 3 inches beyond the removal area in all directions to produce a uniform 6- to 8-mil profile in the intact coating system.

- Vacuum clean the prepared area to remove all dust, dirt, etc. leaving clean sound surfaces.

- Tape to mask the periphery of the prepared intact coating area to prevent coating repair application onto the prepared area.

- Using a putty knife or other suitable tool, fill the opened void with the approved filler/surfacer material completely and strike-off. Allow to cure per CSM's recommendations.

- Apply the coating system in the number of coats necessary to achieve the specified finish coat thickness over the defect and coating removal area and feather the coating onto the abraded coated surfaces around the removal area to avoid a lip and to achieve a neat repair outline. Allow to cure properly.

3.05 COATING SYSTEM SPECIFICATION SHEETS (COATSPEC)

Coating System Identification: EA-5 (continued)

Curing time between coats shall be as specified by the CSM for the site conditions. If the maximum recoat time is exceeded, surface preparation shall require solvent washing, light abrasive blasting, or other procedures per CSM's instructions.

Location	**System Thickness (mils dry film)**
Chemical Receiving Stations	
Slab	110-145 (with silica sand)
Sump walls and floor	40
Storage Tank Secondary Containment	
Floor and other horizontal surfaces	60-75
Vertical Surfaces	40
Metering Pump Secondary Containment	
Floor and other horizontal surfaces	60-75 (with silica sand)
Vertical Surfaces	40

3.05 COATING SYSTEM SPECIFICATION SHEETS (COATSPEC)

Coating System Identification: EC-1

Coating Material: Hybrid Polyurethane

Surface: Concrete or dense masonry where existing crack or joint movement is suspected of propagating through rigid cured epoxy coatings.

Service Condition: Interior or exterior, exposed to direct sunlight or not, corrosive (immersion pH 4.0 or lower and/or headspace pH 4.0 or lower and/or gaseous H_2S concentrations between 10 and 150 ppm typically).

Surface Preparation: All coating termination and transition details shall be prepared in accordance with the CSM's standard detail drawings. This includes coating termination details, coating transitions at vertical and vertical to horizontal corners, coating terminations at joints, concrete crack treatment, pipe penetration treatment, coating terminations

at metal embedments in the concrete substrate, and other details. The CSM's standard detail drawings shall be submitted for all such coating applications. If standard details are not available for a given detail treatment, the CSM shall be required to produce one at no additional cost to the owner, the engineer, or any other party.

If wet abrasive or water blasting surface preparation methods were used, the concrete substrate shall be allowed to dry under warm conditions (minimum of 75 degrees F) for at least 5 days prior to coating application. Following surface preparation work and dry-out, all surfaces to be coated shall be vacuum cleaned to remove all loose dirt, dust, or other loose materials.

3.05 COATING SYSTEM SPECIFICATION SHEETS (COATSPEC)

Coating System Identification: EC-1 (continued)

Concrete: Concrete surfaces shall be allowed to cure for at least 28 days and allowed to dry to the moisture content recommended by the CSM. Moisture content may be tested by the Construction Manager with a Delmhorst Instrument Company moisture detector, or equal. Except as otherwise specified, loose concrete, form oils, surface hardeners, curing compounds, and laitance shall be removed from surfaces by abrasive blasting and chipping, and voids and cracks shall be repaired as specified in Section 03300. Surface Preparation must open up all shelled over air voids or bugholes to expose fully the void's depth, width, and length. Concrete shall be abraded to achieve a uniform concrete surface profile of CSP-5 in accordance with ICRI 03732. After surface preparation has been accepted, a complete skim coat of the specified filler surfacer shall be applied over all concrete surfaces and all bugholes (air voids) shall be completely filled using this same material. The filler/surfacer material shall be applied as a complete parge coat of the substrate. If the parge coat (filler/surfacer material) is non-polymer modified, it must be brush blast cleaned following adequate cure per CSM's instructions to produce a uniform anchor pattern of CSP-4 in accordance with ICRI 03732 prior to coating application.

Application: Field

Surfacers or filler materials shall be applied per CSM's recommendations prior to application of prime coat to fill

bugholes and voids. These materials must be compatible with the primers and finish coats.

Prime coat shall be thinned and applied as recommended by the CSM, provided the coating as applied complies with prevailing air pollution control regulations.

System Thickness: 35-50 mils dry film in addition to the parge coat.

3.05 COATING SYSTEM SPECIFICATION SHEETS (COATSPEC)

Coating System Identification: EC-1 (continued)

Coatings:

Primer: One coat at 2-3 mils dry film thickness

Finish: One or more coats at CSM's recommended dry film thickness per coat to the specified system thickness.

Testing: Holiday detection shall be performed over 100% of the coated surface area to identify any holidays or pinholes that must be repaired.

Pinhole and Holiday Repair Procedure: Pinholes or holidays identified by Holiday Detection shall be repaired as follows:

- Using a grinder or other suitable power tool, remove the coating system at all pinholes or holidays in an area at least 2 inches in diameter or in both dimensions around the defect back to the concrete substrate.
- Chip out and remove the concrete to expose the full dimensions in all three directions of the air void responsible for the defect.
- Aggressively abrade or sand the intact coating system surface at least 3-inches beyond the removal area in all directions to produce a uniform 6- to 8-mil profile in the intact coating system.
- Vacuum clean the prepared area to remove all dust, dirt, etc. leaving clean sound surfaces.
- Tape to mask the periphery of the prepared intact coating area to prevent coating repair application onto the prepared area.

- Using a putty knife or other suitable tool, fill the opened void with the approved filler/surfacer material completely and strike-off. Allow to cure per CSM's recommendations.

3.05 COATING SYSTEM SPECIFICATION SHEETS (COATSPEC)

Coating System Identification: EC-1 (continued)

- Apply the coating system in the number of coats necessary to achieve the specified 35-50 mils DFT over the defect and coating removal area and feather the coating onto the abraded coated surfaces around the removal area to avoid a lip and to achieve a neat repair outline. Allow to cure properly.

3.05 COATING SYSTEM SPECIFICATION SHEETS (COATSPEC)

Coating System Identification: EC-2 (NSF-61)

Coating Material: Modified Polyurethane

Surface: Concrete or Dense Masonry where existing crack or joint movement is suspected due to thermal conditions and would propagate through rigid epoxy coating systems and/or where NSF-61 certification is required.

Service Condition: Interior or exterior, submerged or non-submerged indirect sunlight – moderately corrosive.

Surface Preparation: All coating termination and transition details shall be prepared in accordance with the CSM's standard detail drawings. This includes coating termination details, coating transitions at vertical and vertical to horizontal corners, coating terminations at joints, concrete crack treatment, pipe penetration treatment, coating terminations at metal embedments in the concrete substrate, and other details. The CSM's standard detail drawings shall be submitted for all such coating applications. If standard details are not available for a given detail treatment, the CSM shall be required to produce one at no additional cost to the owner, the engineer, or any other party.

If wet abrasive or water blasting surface preparation methods were used, the concrete substrate shall be allowed to dry under warm conditions (minimum of 75 degrees F) for at least 5 days prior to coating application. Following surface preparation work and dry-out, all surfaces to be coated shall be vacuum cleaned to remove all loose dirt, dust, or other loose materials.

3.05 COATING SYSTEM SPECIFICATION SHEETS (COATSPEC)

Coating System Identification: EC-2 (NSF-61) (continued)

Concrete: Concrete surfaces shall be allowed to cure for at least 28 days and allowed to dry to the moisture content recommended by the CSM. Moisture content may be tested by the Construction Manager with a Delmhorst Instrument Company moisture detector, or equal. Except as otherwise specified, loose concrete, form oils, surface hardeners, curing compounds, and laitance shall be removed from surfaces by abrasive blasting and chipping, and voids and cracks shall be repaired as specified in Section 03300. Surface Preparation must open up all shelled over air voids or bugholes to expose fully the void's depth, width, and length. Concrete shall be abraded to achieve a uniform concrete surface profile of CSP-5 in accordance with ICRI 03732. After surface preparation has been accepted, a complete skim coat of the specified filler surfacer shall be applied over all concrete surfaces and all bugholes (air voids) shall be completely filled using this same material. The filler/surfacer material shall be applied as a complete parge coat of the substrate. If the parge coat (filler/surfacer material) is non-polymer modified, it must be brush blast cleaned following adequate cure per CSM's instructions to produce a uniform anchor pattern of CSP-4 in accordance with ICRI 03732 prior to coating application.

Application: Field

Surfacer or filler shall be applied per CSM's recommendations prior to application of prime coat to fill bugholes and voids. These materials must be compatible with the primers and finish coats.

Prime coat shall be thinned and applied as recommended by the CSM, provided the coating as applied complies with prevailing air pollution control regulations.

System Thickness: 50-75 mils dry film.

3.05 COATING SYSTEM SPECIFICATION SHEETS (COATSPEC)

Coating System Identification: EC-2 (NSF-61) (continued)

Coatings:

Primer: One coat at 3-5 mils dry film thickness

Finish: One or more coats at CSM's recommended dry film thickness per coat to the specified system thickness.

Testing: Holiday detection shall be performed over 100% of the coated surface area to identify any holidays or pinholes that must be repaired.

Pinhole and Holiday Repair Procedure: Pinholes or holidays identified by Holiday Detection shall be repaired as follows:

- Using a grinder or other suitable power tool, remove the coating system at all pinholes or holidays in an area at least 2 inches in diameter or in both dimensions around the defect back to the concrete substrate.
- Chip out and remove the concrete to expose the full dimensions in all three directions of the air void responsible for the defect.
- Aggressively abrade or sand the intact coating system surface at least 3-inches beyond the removal area in all directions to produce a uniform 6- to 8-mil profile in the intact coating system.
- Vacuum clean the prepared area to remove all dust, dirt, etc. leaving clean sound surfaces.
- Tape to mask the periphery of the prepared intact coating area to prevent coating repair application onto the prepared area.
- Using a putty knife or other suitable tool, fill the opened void with the approved filler/surfacer material completely and strike-off. Allow to cure per CSM's recommendations.

3.05 COATING SYSTEM SPECIFICATION SHEETS (COATSPEC)

Coating System Identification: EC-2 (NSF-61) (continued)

- Apply the coating system in the number of coats necessary to achieve the specified 35-50 mils DFT over the defect and coating removal area and feather the coating onto the abraded coated surfaces around the removal area to avoid a lip and to achieve a neat repair outline. Allow to cure properly.

3.05 COATING SYSTEM SPECIFICATION SHEETS (COATSPEC)

Coating System Identification: EU-1

Coating Material: Zinc-Epoxy-Polyurethane System

Surface: Ferrous Metal

Service Condition: Exterior, exposed to direct sunlight, moderately corrosive, non-immersed.

Surface Preparation:

General: Shop primed surfaces which are to be incorporated in the work shall be prepared in the field by cleaning surfaces in accordance with SSPC SP-2 (Hand Tool Cleaning). Damaged shop coated areas shall be cleaned in accordance with SSPC SP-3 (Power Tool Cleaning) and recoated with the primer specified.

Ferrous Metal: Bare ferrous metal surfaces shall be prepared in accordance with SSPC SP-6 (Commercial Blast Cleaning) 2.5 – 3.0. Ductile iron surfaces to be coated shall be abrasive blast cleaned in accordance with paragraph 09900-3.02 D.

Ferrous metal with rust bleeding shall be cleaned in accordance with SSPC-SP-11 (Power Tool Cleaning to Bare Metal). Areas of rust penetration shall be spot blasted to SSPC SP-10 (Near White Blast) and spot primed with the specified primer.

Galvanized Metal: Damaged galvanized steel areas with exposed ferrous metal and/or rusted shall be cleaned in accordance with SSPC SP-5 (White Metal Blast Cleaning) or Power Tool Cleaned to Bare Metal in accordance with SSPC-SP-11 to achieve a uniform 1.0- to 1.5-mil profile and spot primed with the primer specified.

Nonferrous and galvanized metal shall be prepared in accordance with SSPC SP-7 (Brush-off Blast Cleaning) to impart a 1.0- to 2.0-mil profile to the galvanized steel surfaces. Where this cannot be performed, prepare by abrading in accordance with SSPC-SP-3, Power Tool Cleaning to impart a 1.0- to 1.5-mil profile uniformly to the galvanized steel surfaces.

3.05 COATING SYSTEM SPECIFICATION SHEETS (COATSPEC)

Coating System Identification: EU-1 (continued)

For EU-1 over galvanized steel, delete the zinc rich primer.

Application: Field

General: Prime coat may be thinned and applied as recommended by the CSM, provided the coating as applied complies with prevailing air pollution control regulations.

Ferrous Metal: Prime coats shall be a zinc rich epoxy or polyurethane primer compatible for use with urethane finish coats and applied in accordance with written instructions of the CSM or in the case of CARB or SCAQMD applications, prime with specified primer that is not zinc rich. In these cases, only a two-coat system is applied.

System Thickness: 3 to 4 mils of zinc rich primer, one intermediate or primer epoxy coat at 5 to 6 mils and one finish coat of polyurethane at 2 to 3 mils DFT.

Coatings:

Primer: One coat at CSM's recommended dry film thickness.

Intermediate: One coat at CSM’s recommended dry film thickness.

Finish: One coat at CSM's recommended dry film thickness per coat to meet the specified system thickness.

3.05 COATING SYSTEM SPECIFICATION SHEETS (COATSPEC)

Coating System Identification:	EU-1-FRP
Coating Material:	Specialty Primer plus Polyurethane Finish Coat
Surface:	Exterior of FRP Pipe and Tanks, etc.
Service Condition:	Exterior, exposed to direct sunlight, non-immersed.
Surface Preparation:	
General:	Clean to remove loose dirt, dust, or other contaminants. Prepare surfaces by sanding to produce roughness to achieve a uniform, minimum surface profile of 1.5 to 2.0 mils. Solvent clean thoroughly using solvent as recommended by the CSM. Thoroughly clean to remove loose debris by vacuum cleaning.
Application:	Field
General:	Apply primer coat and thin as recommended by the CSM provided the coating applied complies with prevailing air pollution control regulations. Apply finish coat as recommended by the CSM.
System Thickness:	Primer to 2 to 4 mils and finish coat is 2 to 3 mils DFT.
Coatings:	
Primer:	One coat at CSM's recommended dry film thickness.
Finish:	One coat at CSM's recommended dry film thickness per coat to meet the specified system thickness.

3.05 COATING SYSTEM SPECIFICATION SHEETS (COATSPEC)

Coating System Identification:	G
Coating Material:	Grease
Surface:	Metal
Surface Preparation:	
Ferrous Metal:	Ferrous metal surfaces shall be prepared in accordance with SSPC SP-1 (Solvent Cleaning).
Application:	Field
	Coating shall be applied with stiff brush, hand swab, or airless spray gun.
System Thickness:	50 square feet per gallon
Coating:	One coat of grease coating

3.05 COATING SYSTEM SPECIFICATION SHEETS (COATSPEC)

Coating System Identification:	HH-1
Coating Material:	Proprietary Primer plus Silicone Topcoat
Surface:	Metal
Service Condition:	Temperature to 750 degrees F.
Surface Preparation:	Metal surfaces shall be prepared in accordance with SSPC SP-10 (Near White Metal Blast Cleaning) to achieve a uniform surface profile of 2.0 to 2.5 mils.
Application:	Field
	Curing as required by CSM.
System Thickness:	6.5 to 8.0 mils dry film
Coating:	Primer at 5 to 6 mils DFT plus one topcoat at 1.5 to 2.0 mils DFT.

3.05 COATING SYSTEM SPECIFICATION SHEETS (COATSPEC)

Coating System Identification:	HH-2
Coating Material:	Proprietary Primer plus Silicone Topcoat (available in black or aluminum only)
Surface:	Metal
Service Condition:	Temperature to 1200 degrees F.
Surface Preparation:	Metal surfaces shall be prepared in accordance with SSPC SP-10 (Near White Metal Blast Cleaning) to achieve a uniform surface profile of 2.0 to 2.5 mils.
Application:	Field
	Curing as required by CSM.
System Thickness:	6.5 to 8.0 mils dry film
Coating:	Primer at 5 to 6 mils DFT plus one topcoat at 1.5 to 2.0 mils DFT.

3.05 COATING SYSTEM SPECIFICATION SHEETS (COATSPEC)

Coating System Identification:	L-1
Coating Material:	Latex
Surfaces:	Concrete, masonry, plaster, gypsum board.
Service Condition:	Interior and exterior including existing exterior coated concrete.
Surface Preparation:	
Concrete:	Concrete surfaces shall be allowed to age for at least 28 days and allowed to dry to the moisture content recommended by the CSM. Moisture content may be tested by the Construction Manager with a Delmhorst Instrument Company moisture detector, or equal. Loose concrete and laitance shall be removed from surfaces, and voids and cracks shall be repaired as specified in Section 03300.
Existing Coated Concrete:	Remove all loose coating down to a sound substrate or intact, well-adhered existing coating by scraping or other means. Then, abrade all surfaces to achieve a 0.5- to

1.5-mil uniform profile and vacuum clean to remove all loose dirt, paint chips, and dirt.

Masonry: Masonry surfaces shall be allowed to age for at least 28 days. Holes or other joint defects shall be filled with mortar and repointed. Loose or splattered mortar shall be removed by scraping and chipping. Masonry surfaces shall be cleaned with clear water by washing and scrubbing to remove foreign and deleterious substances. Muriatic acid shall not be used. After cleaning, masonry surfaces shall be filled with block filler compatible with the specified primer.

Plaster: Plaster surfaces shall be dry, clean, and free from grit, loose plaster, and surface irregularities. Cracks and holes shall be repaired with acceptable patching materials, keyed to existing surfaces, and sandpapered smooth. Surfaces shall be cleaned with clear water by washing and scrubbing to remove foreign and deleterious substances. After cleaning, surfaces shall be sealed with a compatible sealer.

3.05 COATING SYSTEM SPECIFICATION SHEETS (COATSPEC)

Coating System Identification: L-1 (continued)

Gypsum Wallboard: Tape joints and spackled nail heads shall be sanded smooth and dusted. Seal with PVA sealer for interior uses only.

Application: Field

Sealer or filler shall dry a minimum of 48 hours prior to primer application.

Drying time between coats shall be as recommended by CSM.

System Thickness: 4 mils dry film.

Coatings:

Primer: One coat at CSM's recommended dry film thickness.

Finish: Two or more coats at CSM's recommended dry film thickness per coat to the specified system thickness.

3.05 COATING SYSTEM SPECIFICATION SHEETS (COATSPEC)

Coating System Identification: L-2

Coating Material: Latex

Surface: PVC and CPVC pipe.

Service Condition: Exterior, direct sunlight exposure.

Surface Preparation: Plastic pipe shall be cleaned with solvent compatible with the specified primer and sanded to roughen surfaces to achieve a uniform surface profile of 1.0 to 1.5 mils. Vacuum clean after sanding to remove all loose dust, plastic particles, and dirt.

Application: Field

System Thickness: 3 mils dry film.

Coatings:

Primer: One coat at CSM's recommended dry film thickness.

Finish: One or more coats at CSM's recommended dry film thickness per coat to the specified system thickness.

3.05 COATING SYSTEM SPECIFICATION SHEETS (COATSPEC)

Coating System Identification: L-3

Coating Material: Latex – Direct to Metal

Surface: Ferrous Metal

Service Condition: Interior or Exterior

Surface Preparation:

Ferrous Metals: Bare ferrous metal surfaces shall be prepared in accordance with SSPC SP-6 (Commercial Blast Cleaning) unless specified otherwise. Impart a 1.5- to 2.0-mil profile to substrate.

Ferrous metal with rust bleeding shall be cleaned in accordance with SSPC SP-1 (Solvent Cleaning). Areas of rust penetration shall be spot blasted to SSPC SP-10 (Near White Blast) and spot primed with the specified primer.

Shop primed surfaces which are to be incorporated in the work shall be prepared in the field by cleaning surfaces in accordance with SSPC SP-2 (Hand Tool Cleaning) or SSPC-SP-3 (Power Tool Cleaning).

Nonferrous and Galvanized Metal: Galvanized or nonferrous surfaces shall be prepared in accordance with SSPC SP-1 (Solvent Cleaning) after Brush Blast Cleaning in accordance with SSPC-SP-7.

Application: Field

System Thickness: 6 to 8 mils dry film excluding sealer

Coatings:

Primer: One coat at CSM's recommended dry film thickness.

Finish: Two or more coats at CSM's recommended dry film thickness per coat to the specified system thickness.

3.05 COATING SYSTEM SPECIFICATION SHEETS (COATSPEC)

Coating System Identification: L-4

Coating Material: Latex

Surface: Wood

Service Condition: Interior

Surface Preparation: Wood surfaces shall be cleaned of dirt, oil or other foreign substances with mineral spirits, scrapers, sandpaper or wire brush. Finished surfaces exposed to view shall be smoothed by planing or sandpapering. Millwork shall be sandpapered and given a coat of the specified primer on all sides before installation. Built-in surfaces of windowsills shall be double primed. Glazing rabbets and beads in exterior sash and doors shall be double primed. Small, dry, seasoned knots shall be surfaced scraped, sandpapered, and thoroughly cleaned and shall be given a thin coat of an acceptable knot sealer before application of the priming coat. Large, open, unseasoned knots, and beads or streaks of pitch shall be scraped off; however, if the pitch is still soft, it shall be removed with mineral spirits or turpentine, and the resinous area shall be coated with knot sealer prior to priming. After priming, holes and imperfections shall be filled with putty or plastic wood, colored to match the finish coat, allowed to dry and sandpapered smooth.

Application: Field

System Thickness: 4.0 mils dry film.

Coatings:

Primer: One coat at CSM's recommended dry film thickness.

Finish: Two or more coats at CSM's recommended dry film thickness per coat to the specified system thickness.

3.05 COATING SYSTEM SPECIFICATION SHEETS (COATSPEC)

Coating System Identification: M-1

Coating Material: Petrolatum based mastic or wax based wrapping tapes.

Surfaces: Metal

Service Condition: Below grade (buried) or where little to no surface preparation can be performed on piping or structural steel.

Surface Preparation: Remove loose scale, rust, dirt, excessive moisture, or frost from the surface in accordance with SSPC SP-2 (Hand Tool Cleaning).

Application: All surfaces shall be hand rubbed or brushed with a priming paste recommended by the CSM. Sharp projections such as threads, irregular contours, or badly pitted areas shall receive a liberal amount of priming paste to ensure maximum protection of metal throughout.

On irregular shaped surfaces, i.e., nuts, bolts, flanges, valves, etc., the Contractor shall use either of the following systems recommended by the CSM.

A. Apply recommended mastic by hand in sufficient quantity to build an even contour over entire surface. The Contractor shall pay particular attention to ensure that folds and air pockets within the mastic layer are thoroughly pressed out prior to subsequent application of tape.

OR:

B. An extra layer of tape shall be cut and carefully molded around sharp projections, nuts, bolts, etc., before final application of tape, in order to meet specified system thickness.

3.05 COATING SYSTEM SPECIFICATION SHEETS (COATSPEC)

Coating System Identification: M-1 (Continued)

Tape shall be spirally wrapped with a 55 percent overlap and sufficient tension and pressure to provide continuous adhesion without stretching the tape. Edges of tape must be continuously smoothed and sealed by hand during wrapping. On vertical application, contractor shall begin at bottom and proceed upward creating a weatherboard overlap.

System Thickness: Smooth contours shall have a minimum thickness of 50 mils while nuts, bolts, and sharp projections shall be 100 mils.

Tape: Number and types of tape wraps shall be in accordance with the CSM's written instructions.

3.05 COATING SYSTEM SPECIFICATION SHEETS (COATSPEC)

Coating System Identification: M-2

Coating Material: Epoxy mastic or equal

Surface: Ferrous Metal

Service Condition: Interior, corrosive environment, confined enclosures, where minimal surface preparation is possible.

Surface Preparation:

Ferrous Metal: All uncoated ferrous metal surfaces shall be prepared in accordance with SSPC SP-3 (Power Tool Cleaning), or SSPC-SP-11 (Power to Cleaning to Bare Metal) prior to assembly. Surface preparation to achieve a uniform surface profile of 2.0 to 2.5 mils. Shop primed ferrous metal surfaces and fabricated assemblies shall be clean and dry prior to the application of field coats. Following assembly, the Contractor shall smooth welds and prominences using power tools prior to the application of the field applied coatings.

Application: Field

General: Prior to the application of field applied coatings, welds, back-to-back angles, sharp or rough edges and weld splatter shall be brushed with the specified prime coat and allowed to cure overnight.

System Thickness: 15 mils dry film.

Coatings:

Prime: One coat of the CSM's recommended dry film thickness.

Finish: One or more coats of CSM's recommended dry film thickness per coat to the specified system thickness.

3.05 COATING SYSTEM SPECIFICATION SHEETS (COATSPEC)

Coating System Identification: S-1

Coating Material: Penetrating acrylic stain, color required.

Surface: Concrete

Service Condition: Non-immersed, exposure to moisture and sunlight.

Surface Preparation: Brush-off blast or industry standard acid etch or other preparation as approved by the CSM.

Application:

General: Drying time between coats shall be as specified by the CSM for the site conditions.

Coatings: Minimum of two coats overall (coat as many times as required to achieve desired color).

System Thickness: 200 square feet per gallon maximum or as recommended by the CSM.

Color Selection: As approved by the Construction Manager consistent with neighborhood selection. The Contractor to price materials based on custom color.

3.05 COATING SYSTEM SPECIFICATION SHEETS (COATSPEC)

Coating System Identification:	S-2
Coating Material:	Penetrating Water Repellent (Clear and Non-Film Building)
Surface:	Concrete Floors
Service Condition:	Exterior and Interior.
Surface Preparation:	Clean surfaces of all traces of dirt, dust, efflorescence, mold, salt, grease, oil, asphalt, laitance, curing compounds, paint, coatings, and other foreign materials by brush-off blast, water blasting, and/or chemical cleaners or other preparation as approved by the CSM.
Concrete	Concrete surfaces shall be allowed to age for at least 28 days and allowed to dry to the moisture content recommended by the CSM. Moisture content may be tested by the Construction Manager with a Delmhorst Instrument Company moisture detector, or equal. Loose concrete and laitance shall be removed from surfaces, and voids and cracks shall be repaired as specified in Section 03300
Application:	
General:	Drying time before placing into service shall be as recommended by the CSM for site conditions.
System Coverage:	Follow CSM's recommendations.
Color Selection:	Clear.

3.05 COATING SYSTEM SPECIFICATION SHEETS (COATSPEC)

Coating System Identification:	S-3
Coating Material:	Penetrating Water Repellent (Clear & Non-Film Building)
Surface:	Concrete and Masonry Walls
Service Condition:	Exterior and Interior – For Anti-Graffiti Applications
Surface Preparation:	Clean surfaces of all traces of dirt, dust, efflorescence, mold, salt, grease, oil, asphalt, laitance, curing compounds, paint, coatings, and other foreign materials by brush-off blast, water blasting, and/or chemical cleaners or other preparation as approved by the CSM.
Concrete	Concrete surfaces shall be allowed to age for at least 28 days and allowed to dry to the moisture content recommended by the CSM. Moisture content may be tested by the Construction Manager with a Delmhorst Instrument Company moisture detector, or equal. Loose concrete and laitance shall be removed from surfaces, and voids and cracks shall be repaired as specified in Section 03300
Masonry:	Masonry surfaces shall be allowed to age for at least 28 days. Holes or other joint defects shall be filled with mortar and repointed. Loose or splattered mortar shall be removed by scraping and chipping. Masonry surfaces shall be cleaned with clear water by washing and scrubbing to remove foreign and deleterious substances. Muriatic acid shall not be used.

Application:

General:	Drying time before placing into service shall be as recommended by the CSM for site conditions.
System Coverage:	Follow CSM's recommendations.
Color Selection:	Clear.

3.05 COATING SYSTEM SPECIFICATION SHEETS (COATSPEC)

Coating System Identification:	S-4
Coating Material:	Penetrating Oil and Water Repellent (Non-Film Forming)
Surface:	Concrete Floors
Service Condition:	Exterior and Interior.
Surface Preparation:	Clean surfaces of all traces of dirt, dust, efflorescence, mold, salt, grease, oil, asphalt, laitance, curing compounds, paint, coatings, and other foreign materials by brush-off blast, water blasting, and/or chemical cleaners or other preparation as approved by the CSM.
Concrete	Concrete surfaces shall be allowed to age for at least 28 days and allowed to dry to the moisture content recommended by the CSM. Moisture content may be tested by the Construction Manager with a Delmhorst Instrument Company moisture detector, or equal. Loose concrete and laitance shall be removed from surfaces, and voids and cracks shall be repaired as specified in Section 03300.
Application:	
General:	Drying time before placing into service shall be as recommended by the CSM for site conditions.
Coatings:	One coat, flood horizontal surface so coating ponds for at least 60 seconds. Broom over all puddles thoroughly until complete penetration is achieved
System Thickness:	Follow CSM's recommendations.
Color Selection:	Clear.

3.06 COATING SYSTEMS SCHEDULE (FINISH SCHEDULE)

Specific coating systems, colors, and finishes for rooms, galleries, piping, equipment, and other items that are coated or have other architectural finishes are specified in the following coating system schedule. Unless otherwise specified in the coating system schedule, the word "interior" shall mean the inside of a building or structure, and the word "exterior" shall mean outside exposure to weather elements. All colors to be selected by the owner during construction.

Location Description	Surface	Coating System Identification
A. General: All surfaces not specified by area or structure	1. Structural Steel, Metal Decking, and Galvanized Acoustical Decking	Uncoated or E-2
	2. Equipment and Metal Appurtenances	
	a. Equipment, non immersed, unless otherwise specified	
	1) Indoors	E-1
	2) Outdoors	EU-1
	b. Equipment, immersed, unless otherwise specified	E-2
	c. High temperature equipment operable at	
	1) 200 to 750 degrees F	HH-1
	2) above 750 degrees F to 1200 degrees F	HH-2
	d. Existing equipment	
	1) Not damaged nor modified by work in this contract	Uncoated
	2) Damaged, exposed, or modified by work in this contract	
	a) Indoors	E-1 (see paragraph 09900-3.02)
	b) Outdoors	EU-1 without primer (see paragraph 09900-3.02)
	e. Diffusers and grilles on coated surfaces, unless otherwise specified	
	1) Indoors	E-1
	2) Outdoors	EU-1
	f. Diffusers and grilles on uncoated surfaces, unless otherwise specified	
	1) Indoors	E-1
	2) Outdoors	EU-1
	g. Existing diffusers and grilles	

Location Description	Surface	Coating System Identification
	1) Not damaged not modified by work in this contract	Uncoated
	2) Damaged, exposed, or modified by work in this contract	
	a) Indoors	E-1 (see paragraph 09900-3.02 F)
	b) Outdoors	EU-1 without primer (see paragraph 09900-3.02 F)
	h. Electrical switchgear panels, unit substations, motor control centers, power transformers, distribution centers, and relay panels; indoors and outdoors	See paragraph 09900-3.03 I
	i. Instrumentation panels, graphic indicating panels, indicating and transmitting field panels, unless otherwise specified	
	1) Indoors	See paragraph 09900-3.03 I
	2) Outdoors	See paragraph 09900-3.03 I
	j. Existing electrical and instrumentation panels	
	1) Not damaged by work in this contract	Uncoated
	2) Damaged or exposed to outside surfaces by work in this contract	
	a) Indoors	E-1 (see paragraph 09900-3.02 F)
	b) Outdoors	EU-1 without primer (see paragraph 09900-3.02 F)
	3. Conduit, Piping and Ductwork	
	a. Ferrous, non-ferrous and galvanized piping, and appurtenant hangers and supports, non-immersed, unless otherwise specified.	
	1) Indoors – noncorrosive	E-1
	2) Outdoors – noncorrosive	EU-1
	3) Indoors – in corrosive environment	EA-1
	4) Buried piping	M-1 or M-2
	b. Ferrous piping, appurtenant and supports, immersed	E-2

Location Description	Surface	Coating System Identification
	c. Conduit, outlet and junction boxes, lighting transformers, lighting, communication and small power panels, control stations, piping, lagged ductwork, appurtenant hangers, clamps, and supports on coated surfaces, unless otherwise specified.	
	1) Indoors	E-1
	2) Outdoors	EU-1
	d. Conduit, outlets and junction boxes, lighting transformers, lighting, communication and small power panels, control stations, piping, lagged ductwork, appurtenant hangers, clamps and supports on uncoated surfaces, unless otherwise specified	
	1) Indoors	E-1
	2) Outdoors	EU-1
	e. Existing conduit, outlet and junction boxes, lighting transformers, lighting communication and small power panels, control stations, piping, lagged ductwork, appurtenant hangers, clamps, and supports	
	1) Not damaged nor modified by work in this contract	Uncoated
	2) Damaged, exposed, or modified by work in this contract	
	a) Indoors	E-1 (see paragraph 09900-3.02 F)
	b) Outdoors	EU-1 without primer (see paragraph 09900-3.02 F)
	f. Racked conduits and cable trays	Uncoated
	g. Insulated pipe jacketing	Uncoated
	h. Plastic, fiberglass and flexible conduit and piping	
	1) Unless otherwise specified	L-2
	2) PVC and CPVC Piping and Electrical Conduit	L-2
	a) Exposed to direct sunlight	L-2
	b) Not exposed to direct sunlight	E-7
	i. High temperature piping operable at	
	1) 200 to 750 degrees F	HH-1
	2) Above 750 degrees F to 1,200 degrees F	HH-2
	j. Exposed ductwork, unless otherwise specified	L-2

Location Description	Surface	Coating System Identification
	4. Concrete, Grout, Masonry and Plaster	
	a. Immersed tank and channel walls and bottoms unless otherwise specified	Uncoated
	b. Outside concrete walls below grade common with dry area or room	In accordance with Section 07100)
	c. Walls and ceilings	
	1) Precast concrete or colored masonry	Uncoated
	2) Outdoors, unless otherwise specified	Uncoated
	3) Indoors, unless otherwise specified	E-4
	d. Concrete equipment bases unless otherwise specified	E-4
	e. Floors unless otherwise specified	S-2
	f. Existing coated surfaces.	L-1
	5. Door and Door Frames	
	a. Doors unless otherwise specified	
	1) Ferrous metal	
	a) Indoors	E-1
	b) Outdoors	EU-1
	2) Aluminum	Uncoated
	3) Other	Plastic laminate
	4) Existing	
	a) Not damaged by work in this contract	Uncoated
	b) Damaged, exposed, or modified by work in this contract	
	(1) Indoors	E-1 (see paragraph 09900-3.02 F)
	(2) Outdoors	EU-1 (see paragraph 09900-3.02 F)
	b. Door frames unless otherwise specified	
	1) Adjacent wall coated	
	a) Indoors	E-1
	b) Outdoors	EU-1
	2) Adjacent wall uncoated	
	a) Indoors	E-1
	b) Outdoors	EU-1
	3) Aluminum	Uncoated

Location Description	Surface	Coating System Identification
	4) Existing	
	a) Not damaged by work in this contract	Uncoated
	b) Damaged, exposed , or modified by work in this contract	
	(1) Indoors	E-1 (see paragraph 09900-3.02 F)
	(2) Outdoors	EU-1 without primer (see paragraph 09900-3.02 F)
	6. Handrails, Gratings, Floor Plates, Manhole Covers, and Hatches	
	a. Unless otherwise specified	Uncoated
	b. Existing	
	1) Not damaged by work in this contract	Uncoated
	2) Damaged, exposed, or modified by work in this contract	
	a) Indoors	E-1 (see paragraph 09900-3.02 F)
	b) Outdoors	EU-1 without primer (see paragraph 09900-3.02 F)
	7. Metal Stairs, Ladders, Platforms, and Supports Except Tread and Grating	
	a. Indoors	E-1
	b. Outdoors	EU-1
	c. Existing	
	1) Not damaged nor modified by work in this contract	Uncoated
	429. 2) Damaged, exposed, or modified by work in this contract	
	a) Indoors	E-1 (see paragraph 09900-3.02 F)
	b) Outdoors	EU-1 without primer (see paragraph 09900-3.02 F)
	8. Aluminum Flashing, Light Standards, Supports, and Louvers	
	Indoors and outdoors, unless otherwise specified	Uncoated
	9. Precast Concrete Metalwork	
	Fasteners, anchors, supports, etc.	EU-1

Location Description	Surface	Coating System Identification
	10. Other	
	a. Fire hydrants	430. EU-1
	b. Flap gates	EA-1
	c. Aluminum slide gates	Uncoated
	d. Sluice gates	
	1) Gate	--
	2) Stem, except potable	G
	3) Operator	
	a) Indoors	E-2
	b) Outdoors	EU-1
	e. Tanks	
	1) Steel tanks unless otherwise specified	
	a) Inside of wash water or similar tanks	E-2
	b) Inside of sludge (open top) tanks	E-9
	c) Outside of tank	
	(1) Indoors	E-1
	(2) Outdoors	EU-1
	2) Potable steel water storage tanks	
	a) Inside of tank	E-5
	b) Outside of tank	EU-1
	3) Fiberglass tank	Uncoated
	f. Pipe, ductwork, equipment and appurtenances made from fiberglass, plastic, rubber, including flexible hose, conduit, and plastic coated tubing, in areas not exposed to view (indoors) (metal hangers and supports are coated with E-1)	Uncoated
	g. Buried, sleeve-type and flanged pipe, couplings, valves, mechanical and electrical penetrations	M-1 or M-2
	h. Manholes	EA-2
	i. FRP Ductwork without gelcoat	EU-1-FRP
B. Biological Basins	1. Drive chain, sprockets, and shafts of longitudinal and cross collectors	G
	2. Steel and cast iron below maximum water level	E-2
	3. Gates and Valves	
	a. Gate and stem	EA-1
	b. Operator	EU-1

Location Description	Surface	Coating System Identification
	1. Effluent water troughs and support brackets: a. Metals b. Concrete	 EA-1 EA-2
	4. Concrete headspaces above max water level elevation and 2'-0"below low. water level – corrosive.	EA-2
C. Grit removal tank and supply channels	1. Grit removers, collection equipment.	EA-1
	2. Steel and cast iron below maximum water level	E-2
	3. Concrete headspaces above max water level elevation and 2'-0" below max. water level – corrosive	EA-2
D. UV Channels	1. Concrete headspaces above max water level elevation and down to 2'-0" below lowx. water level – corrosive	EA-2
E. Membrane Tanks	1. Concrete: walls and upper and lower slab	EA-4
F. Headworks Gallery	1. Concrete walls 2. Floors 3. Underside of Roof	E-3 EF-2 E-3
G.Membrane Gallery	1. Concrete walls above chemical containment area 2. Floors 3. Floors at chemical feed pump skids (including citric acid area) 4. Chemical Containment areas, trenches, and sumps 5. Masonry walls	E-3 EF-2 EA-5 EA-5 E-3
H.Thickened sludge holding tank / sludge thickener	1. Exposed metal	E-9
	2. Concrete: walls and upper and lower slab	EA-4
I. Sanitary Sewer manhoels	1. All interior concrete surfaces	EA-2
J. Influent Channel and Wetwell	1. Bar screen housing a. Inside b. Outside 2. Bar screen sluiceway and incoming channel 3. Piping and appurtenant hangers and supports above max. water level elevation 4. Piping and appurtenance hangars and supports below max. water level elevation 5. Walls and ceiling above max. water level elevation 6. Walls below max. water level elevation	 EA-1 EU-1 EA-1 EA-1 E-2 E-9-C EA-2

Location Description	Surface	Coating System Identification
K. Administration Building	1. Outdoors	
	a. Equipment on roof	EU-1
	b. Walls	Uncoated
	2. Room 101 and 201 - Stairway	
	a. Floor	Refer to Architectural Schedule/ Specs
	b. Base	Refer to Architectural Schedule/ Specs
	c. Plaster walls and ceilings	L-1
	d. Steel deck ceiling	L-3
	e. Steel roof trusses	L-3
	f. Doors	L-3
	g. Door frames	L-3
	3. Room 208 – Electrical Room	
	a. Floor	Refer to Architectural Schedule/ Specs
	b. Base	Refer to Architectural Schedule/ Specs
	c. Plaster walls and ceilings	L-1
	d. Steel deck ceiling	L-3
	e. Steel roof trusses	L-3
	f. Doors	L-3
	g. Door frames	L-3
	4. Room 206 – Mechanical Room	
	a. Floor	Refer to Architectural Schedule/ Specs
	b. Base	Refer to Architectural Schedule/ Specs
	c. Plaster walls and ceilings	L-1
	d. Steel deck ceiling	L-3
	e. Steel roof trusses	L-3
	f. Doors	L-3
	g. Door frames	L-3
	5. Room 207 Data Room	
	a. Floor	Refer to Architectural Schedule/ Specs

Location Description	Surface	Coating System Identification
	b. Base	Refer to Architectural Schedule/ Specs
	c. Treads and risers	Refer to Architectural Schedule/ Specs
	d. Acoustical tile Ceiling	--
	e. Plaster walls and ceilings	L-1
	f. Doors	L-3
	g. Door frames	L-3
	6. Room 216/217 Women's Wash Room and Vestibule	
	a. Floor	Refer to Architectural Schedule/ Specs
	b. Base	Refer to Architectural Schedule/ Specs
	c. Wainscoat	Refer to Architectural Schedule/ Specs
	d. Plaster walls and ceiling	L-1
	e. Doors	L-3
	f. Door frames	L-3
	g. Toilet partition	Refer to Architectural Schedule/ Specs
	h. Vanity	Refer to Architectural Schedule/ Specs
	7. Room 214/215 Men's Wash Room and Vestibule	
	a. Floor	Refer to Architectural Schedule/ Specs
	b. Base	Refer to Architectural Schedule/ Specs
	c. Wainscoat	Refer to Architectural Schedule/ Specs
	d. Plaster walls and ceilings	E-4
	e. Doors	L-3
	f. Door frames	L-3
	g. Toilet partition	Refer to Architectural Schedule/ Specs
	8. Room 202, 203, 204, 212, 205, offices, control room, storage, and break room.	
	a. Floor	Refer to Architectural Schedule/ Specs

Location Description	Surface	Coating System Identification
	b. Base	Refer to Architectural Schedule/ Specs
	c. Plaster walls	L-1
	d. Acoustical tile ceiling	--
	e. Doors	L-3
	f. Door frames	L-3
	g. Counters	
	1) Top	Refer to Architectural Schedule/ Specs
	2) Door faces	Refer to Architectural Schedule/ Specs
	3) Dead panels	Refer to Architectural Schedule/ Specs
	4) Inside and shelving	L-4
	h. Upper cabinet	
	1) Door faces	Refer to Architectural Schedule/ Specs
	2) Inside and shelving	L-4
	9. Room 211 Laboratory	
	a. Floor	Refer to Architectural Schedule/ Specs
	b. Base	Refer to Architectural Schedule/ Specs
	c. Plaster walls	L-1
	d. Acoustical tile ceiling	--
	e. Doors	L-3
	f. Door frames	L-3
	g. Counters	
	1) Tops	Refer to Architectural Schedule/ Specs
	2) Door and drawer faces	Refer to Architectural Schedule/ Specs
	3) Dead panels	Refer to Architectural Schedule/ Specs
	4) Inside	L-4
	5) Shelving	Refer to Architectural Schedule/ Specs

Location Description	Surface	Coating System Identification
	6) Bookshelves	Refer to Architectural Schedule/ Specs
	7) Bookshelf gables	Refer to Architectural Schedule/ Specs
	h. Upper cabinets	
	1) Gable faces	Refer to Architectural Schedule/ Specs
	2) Inside	L-4
	3) Shelving	Refer to Architectural Schedule/ Specs
	i. Exhaust hood trim	Refer to Architectural Schedule/ Specs
	j. Dumbwaiter door	Refer to Architectural Schedule/ Specs

Notes:

1. Owner will select color from coating manufacturer's list of EPA approved colors for potable water.

3.07 INSPECTION AND TESTING BY OWNER

Inspection by the Owner or others does not limit the Contractor's or CSA's responsibilities for quality workmanship or quality control as specified or as required by the CSM's instructions. Inspection by the Owner is in addition to any inspection required to be performed by the Contractor.

The Owner may perform, or contract with an inspection agency to perform, quality control inspection and testing of the coating work covered by this Section 09900. These inspections may include the following:

1. Inspect materials upon receipt to ensure that are supplied by the CSM.

2. Inspect to verify that specified storage conditions for the coating system materials, solvents and abrasives are provided.

3. Inspect and record findings for the degree of cleanliness of substrates.

4. Inspect and record the pH of concrete and metal substrates.

5. Inspect and record substrate profile (anchor pattern).

6. Measure and record ambient air and substrate temperature.

7. Measure and record relative humidity.

8. Check for the presence of substrate moisture in the concrete.

9. Inspect to verify that correct mixing of coating system materials is performed in accordance with CSM's instructions.

10. Inspect, confirm, and record that the "pot life" of coating system materials is not exceeded during installation. Inspect to verify that recoat limitations for coating materials are not exceeded.

11. Perform adhesion testing.

12. Measure and record the thickness of the coating system.

13. Inspect to verify proper curing of the coating system in accordance with the CSM's instructions.

14. Perform holiday or continuity testing for coatings that will be immersed or coatings that will be exposed to aggressively corrosive conditions.

3.08 FINAL INSPECTION

15. Contractor shall conduct a final inspection to determine whether coating system work meets the requirements of the specifications.

16. The Construction Manager will subsequently conduct a final inspection with the Contractor to determine the work is in conformance with requirements of the contract documents.

17. Any rework required shall be marked. Such areas shall be recleaned and repaired as specified at no additional cost to the Owner.

09900-A Coating System Inspection Checklist			
Project Name:			
Owner		Coating System Manufacturer (CSM)	
General Contractor (GC)		Coating System Applicator(CSA)	
Area or Structure		Location within Structure	
Coating System (e.g. E-1)		Coating Type (e.g., Epoxy, etc.)	

Step	Description		Name	Signature	Date
1	Completion of cleaning and substrate decontamination prior to abrasive blast cleaning.	GC QC			
		CSM QC			
		CSA QC			
2	Installation of protective enclosure of structure or area and protection of adjacent surfaces or structures that are not to be coated.	GC QC			
		CSM QC			
		CSA QC			
3	Completion of ambient condition control in structure or building area and acceptance of ventilation methods in structure or Area.	GC QC			
		CSM QC			
		CSA QC			
4	Completion of Surface Preparation for Substrates to Be Coated.	GC QC			
		CSM QC			
		CSA QC			
5	Completion of Primer Application.	GC QC			
		CSM QC			
		CSA QC			
6	Completion of Concrete Repairs If Required and Related Surface Preparation Rework Prior to Coating	GC QC			
		CSM QC			
		CSA QC			

Step	Description		Name	Signature	Date
	System Application.				
7	Completion of Concrete Filler/ Surface Application to Concrete.	GC QC			
		CSM QC			
		CSA QC			
8	Completion of First Finish Coat Application and of Detail Treatment at Transitions or Terminations.	GC QC			
		CSM QC			
		CSA QC			
9	Completion of Second Finish Coat Application and of Detail Treatment at Transitions and Terminations.	GC QC			
		CSM QC			
		CSA QC			
10	Completion of Full and Proper Cure of Coating System.	GC QC			
		CSM QC			
		CSA QC			
11	Completion of Testing of Cured Coating System including Adhesion, Holiday (Continuity) Testing and Dry Film Thickness.	GC QC			
		CSM QC			
		CSA QC			
12	Completion of Localized Repairs to Coating System Following Testing.	GC QC			
		CSM QC			
		CSA QC			
13	Final Acceptance of Coating System Installation Including Final Clean-Up Complying with Specification Requirements and the CSM's Quality Requirements.	GC QC			
		CSM QC			
		CSA QC			

***END OF SECTION ***

SECTION 10100

VISUAL DISPLAY SURFACES

PART 1 - GENERAL

1.1 SUMMARY:

A. Work of this section includes markerboards and tackboards.

1.2 REFERENCES

A. American National Standards Institute (ANSI): A208.1, Particleboard and MDF.

1.3 SUBMITTALS

A. Shop drawings; indicate the following:
   1. Sizes of markerboards and tackboards.
   2. Materials and construction.
   3. Details of methods of installation and anchorage.

B. Product data: Submit manufacturer's catalog cuts and installation instructions.

1.4 DELIVERY, STORAGE AND HANDLING

A. Deliver no materials until finishing operations are completed and spaces are ready for markerboard and tackboard installation.

PART 2 - PRODUCTS

2.1 MARKERBOARDS

A. Acceptable products:
   1. AARCO Products, Inc., Series 10-320, Vitre-Steel.
   2. Aywon, Deluxe, P^3 Ceramicsteel.
   3. Claridge Products and Equipment, Inc., Series 1 LCS.
   4. Marsh, Inc., Series 1600.

B. Characteristics:
   1. Construction: Porcelain enameled steel bonded to particleboard with aluminum backing sheet with continuous frame/trim around perimeter.
   2. Materials:
      a. Porcelain enameled steel: Minimum 24 gage.
      b. Particleboard: ANSI A208.1, Grade M-1, 3/8-inch thickness, made with binder containing no urea formaldehyde.

c. Backing sheet: Minimum 0.005 inch aluminum.

3. Frame/trim: Satin anodized extruded aluminum.
4. Accessories; provide for each unit:
   a. Marker trough: Extruded aluminum, tubular construction integral with bottom trim; furnish with end closures.
   b. Sizes: 4-foot wide by length indicated on drawings. Furnish boards up to 16-feet in one section.
5. Color: As selected by Architect from manufacturer's premium color range.

2.2 TACKBOARDS

A. Acceptable products:
1. AARCO Products, Inc., Series 10-320, Vinyl Impregnated Cork.
2. Aywon, Deluxe, Gold Seal Bulletin Board Cork.
3. Claridge Products and Equipment, Inc., Series 1 Cork Bulletin Board.
4. Marsh, Inc., Series 1600.

B. Characteristics:
1. Construction: Cork composition bonded to hardboard backing with continuous frame/trim around entire perimeter.
2. Material:
   a. Cork composition: 1/4-inch minimum thickness with burlap backing.
   b. Hardboard backing: 1/4-inch thickness.
3. Frame/trim: Satin anodized extruded aluminum.
4. Sizes: As indicated on drawings.
5. Color: As selected by Architect from manufacturer's premium color range.

PART 3 - EXECUTION

3.1 INSTALLATION

A. Install markerboards and tackboards at locations indicated on the drawings, in accordance with manufacturer's product data and approved shop drawings. Attach using manufacturer's standard mounting clips. Mount at height indicated.

B. Installation of items shall be plumb, level and true to line within 1/8-inch in 12-feet.

END OF SECTION

SECTION 10166

SOLID PHENOLIC TOILET COMPARTMENTS

PART 1 - GENERAL

1.1 SUMMARY:

A. Related work specified elsewhere:
1. Toilet accessories.
2. Rough carpentry.
3. Gypsum board.

1.2 SUBMITTALS:

A. Shop drawings: Indicate plans and elevations of compartments, construction and fabrication details, anchoring and leveling details, plastic manufacturer, thickness, colors and patterns, hardware accessories and fastenings. Include manufacturer's installation and maintenance instructions.

B. Samples:
1. Plastic: Submit samples of manufacturer's standard colors and patterns for Architect's selection.
2. Panel: Submit 1'-0" by 1'-0" sample of panel showing core construction with two sides and two edges, including one finished corner condition.
3. Hardware: Submit actual sample of each hardware item.

1.3 QUALITY ASSURANCE:

A. Applicable standards: Standards of American National Standards Institute (ANSI), A117.1.

1.4 PROJECT/SITE CONDITIONS:

A. Coordinate gypsum board walls to receive toilet compartments so that blocking is attached between studs at points where toilet compartment mounting brackets will be located.

B. Install toilet compartments after plumbing fixtures and floor, wall and ceiling finishes have been installed.

PART 2 - PRODUCTS

2.1 SOLID PHENOLIC PLASTIC COMPARTMENTS:

A. Acceptable manufacturers; subject to compliance with specified requirements:

1. Accurate Partitions Corp.
2. American Sanitary Partition Corp.
3. Ampco Products, Inc.
4. Bobrick Washroom Equipment, Inc.
5. Bradley Corp.
6. Flush Metal Partition.
7. General Partitions Mfg. Corp.
8. Global Partitions.
9. Knickerbocker Partition Corp.
10. Metpar Corp.
11. Tex-Lam Manufacturing, Inc.

B. Type:
1. Floor-supported, overhead-braced compartments.
2. Wall-hung urinal screens.

C. Characteristics:
1. Materials: Solid phenolic plastic core with high pressure melamine surfacing both faces, matte finish, colors as selected by Architect from manufacturer's premium color range.
2. Edges: Exposed phenolic core, beveled and smooth surfaced.
3. Minimum thicknesses:
   a. Pilasters and doors: 3/4".
   b. Panels: 3/4".
4. Fabrication: Cut and pre-drill panels in shop for hardware and toilet accessory items.

2.2 HARDWARE AND FITTINGS:

A. General: Provide heavy-duty, tamper-resistant hardware.

B. Overhead braces: Extruded satin finish anodized aluminum, tubular section, anti-grip design, through-bolted to pilaster.

C. Pilaster shoes: AISI Type 302/304 stainless steel, 3" high, hemmed top and bottom edges, die-formed to fit pilaster, polished finish.

D. Hinges: Chrome-plated, non-ferrous metal or stainless steel, polished finish. Surface-mounted pivot design with stainless steel pivot pins and nylon, self-oiling graphite-bronze or thrust-frictionless bearings for moving parts. Hinges shall be mounted within door structure and adjustable so as to return door by gravity to a preset position when not latched.

E. Wall and panel brackets: Provide continuous extruded aluminum wall brackets at panel-to-wall, pilaster to wall and panel-to-pilaster conditions.

F. Pilaster base: Manufacturer's standard galvanized anchorage device for attachment of pilaster to supporting floor and for leveling of partition. Base consists of threaded rods, saddle, lock washers, leveling nuts and brass or lead expansion shields. Anchors shall penetrate floor at least 1-1/2" for overhead-braced and cross-braced partitions; 2" for floor-braced partitions.

G. Latch, bumper and keeper: Chrome-plated, non-ferrous metal, polished finish, with resilient cushion stop.

H. Door pull for out-swinging doors: Chrome-plated, non-ferrous metal or stainless steel, polished finish.

I. Combination bumper/coat hook for in-swinging doors: Chrome-plated, non-ferrous metal, polished finish with rubber bumper.

J. Coat hook for out-swinging doors: Chrome-plated, non-ferrous metal, polished finish. Mount to partition at height to meet handicapped accessibility requirements.

K. Wall bumper for out-swinging doors: Polished, chrome-plated, non-ferrous metal, with rubber bumper; wall-mounted.

L. Partition anchors:
   1. Non-corrosive, threaded sleeved anchors (sex-bolts) matching hardware finish, bolted through panels, tamper-resistant type.
   2. Provide stainless steel backing plate matching hardware finish where hardware is not of wraparound design.

PART 3 - EXECUTION

3.1 PREPARATION:

A. Confirm dimensions, clearances, wall construction and plumbing fixture locations prior to partition installation.

B. Install compartments after all finishes within area are complete and plumbing fixtures are installed.

3.2 INSTALLATION:

A. Install compartments straight, plumb and anchored rigid to structure, complying with manufacturer's product data and approved shop drawings.

B. Conceal evidence of cutting, drilling and fitting occurring on compartments, walls and floors.

C. Clearances:
1. Between panels and pilasters: 1/4" to 1/2".
2. Between doors and pilasters: 1/8" nominal.
3. Between panels and walls: 1/4" to 1/2".

D. Anchorage:
1. Attach pilaster to floor with two sleeve anchors penetrating floor at least 2". After leveling, tighten base fasteners and secure shoe in position against finished floor.
2. Secure overhead braces to walls using brackets attached with at least two sleeved anchors. Through-bolt brace to pilasters using two bolts per stile.
3. At panel-to-wall, pilaster to wall and panel-to-pilaster conditions, attach panels and pilasters using continuous extruded aluminum bracket, anchored using through-bolts and sleeved anchors.
4. Locate brackets so that holes for wall anchors occur in masonry or tile joints where possible.
5. Attach urinal screens using continuous extruded aluminum brackets.

3.3 ADJUSTMENT AND CLEANING:

A. Adjust doors to align with pilasters and overhead brace, operate freely without excessive force and stop 15 degrees from closed position when unlatched. Out-swinging handicapped partition doors shall return to closed position.

B. Clean compartments and hardware using methods approved by panel manufacturer.

C. Coordinate installation of accessories specified in another section.

D. Tighten anchors to ensure rigid installation.

END OF SECTION

SECTION 10200

ARCHITECTURAL LOUVERS

PART 1 - GENERAL

1.1 SUBMITTALS:

A. Product data: Indicate material types, finishes and sizes, fabrication and installation details.

B. Design criteria: Submit performance data for louvers, certifying compliance with AMCA Standard 500-L, test procedures for pressure drop and water penetration performance.

C. Shop drawings: Indicate louver material, design and construction, with sections and elevations. Indicate mullion locations. Show methods of attachment to adjacent surfaces.

1.2 QUALITY ASSURANCE:

A. Applicable standards; standards of the following, as referenced herein:
1. The Air Moving and Conditioning Association (AMCA).
2. Aluminum Association (AA).
3. American Architectural Manufacturers Association. (AAMA).
4. ASTM International (ASTM).

1.3 PROJECT/SITE CONDITIONS:

A. Protection: Protect pre-finished surfaces from damage and staining. Provide protective covering for louvers during subsequent construction.

B. Coordinate installation of louvers to be built into building structure. Secure templates and lay out to rough dimensions furnished by manufacturer.

PART 2 - PRODUCTS

2.1 LOUVERS:

A. Acceptable manufacturers; subject to compliance with specified requirements:
1. Basis of design: Greenheck Corp., Model EDD-601.
2. The Airolite Corp./Greenheck Corp.
3. American Warming & Ventilating, Inc.
4. Construction Specialties, Inc.
5. Dowco Products Group.
6. Industrial Louvers, Inc.
7. Nystrom Building Products Company.
8. Ruskin Co.

B. Characteristics:

1. Type: Stationary, 6" deep.
2. Material: 6063-T5 aluminum alloy, meeting ASTM B221-08, 0.081" minimum thickness.
3. Construction: Welded.
4. Blade design: Dual drainable blade.
5. Free area: 50%.

C. Finish on exposed aluminum components:
1. Two coat, shop-applied, baked-on, fluoropolymer coating system based on minimum 70% Arkema Group, Kynar 500 or Solvay Solexis, Inc., Hylar 5000 resin (Polyvinylidene fluoride, PVDF), formulated by a licensed manufacturer and applied by manufacturer's approved applicator to meet AAMA 2605-05.
2. Color: Custom (non-exotic) color to match Architect’s sample.
3. Unexposed aluminum components: Mill finish.

D. Screening: 1/2" mesh, 0.063" aluminum or expanded mesh bird screen in extruded aluminum frame as indicated on drawings.

E. Mullions: Provide as indicated on approved shop drawings, of same material and finish as louvers.

F. Sill pieces: Form of same material and finish as louvers.

G. Accessory products:
1. Fasteners: Stainless steel of type required to attach to substrates encountered.
2. Building paper: 15 lbs., asphalt-saturated organic felt.

PART 3 - EXECUTION

3.1 INSTALLATION:

A. Install louvers in accord with approved shop drawings and product data, in prepared openings, plumb and level.
B. Separate aluminum from dissimilar metals, concrete, stucco and masonry using one layer of building paper.
C. Attach louvers using stainless steel fasteners spaced at 1'-0" o. c., at head, sill and jambs.

END OF SECTION

SECTION 10260

WALL AND CORNER GUARDS

PART 1 - GENERAL

1.1 SUMMARY:

A. Work of this section includes corner guards.

B. Related work specified elsewhere: Gypsum board.

1.2 REFERENCES:

A. ASTM International (ASTM).

B. International Building Code (IBC)

C. National Fire protection Association (NFPA); Life Safety code.

D Underwriters Laboratories (UL).

1.3 SUBMITTALS:

A. Submit product data and detailed specifications for each system component and installation accessory required, including installation methods for each type of substrate.

B. Submit shop drawings showing locations, extent and installation details of wall and corner protection. Show methods of attachment to adjoining construction.

C. Samples for verification purposes: Submit 12" long sample of each model specified and as proposed for this work, for verification of guard.

D. Submit product test reports from a qualified independent testing laboratory showing compliance of each component with requirements indicated.

E. Submit maintenance data for wall protection system components for inclusion in operating and maintenance manuals specified in Division 1.

1.4 QUALITY ASSURANCE:

A. Installer qualifications: Engage an installer who has no less than 3 years experience in installation of systems similar in complexity to those required for this project.

B. Manufacturer’s qualifications: Not less than 5 years experience in the production of specified products and a record of successful in-service performance.

C. Code compliance: Assemblies shall conform to applicable codes including IBC, and Life Safety.

D. Impact strength: Provide assembled wall protection units that have been tested in accord with the applicable provisions of ASTM F476-84(2002).

E. Chemical and stain resistance: Provide wall protection system components with chemical and stain resistance in accordance with ASTM D1308-02(2007).

F. Single source responsibility: Provide all components of the wall protection system manufactured by the same company to ensure compatibility of color, texture and physical properties.

1.5 DELIVERY, STORAGE AND HANDLING:

A. Deliver materials to the project site in unopened original factory packaging clearly labeled to show manufacturer.

B. Store materials in original, undamaged packaging in a cool, dry place out of direct sunlight and exposure to the elements. Maintain a minimum room temperature of 40°F and a maximum of temperature of 100°F.

C. Store material flat.

1.6 PROJECT CONDITIONS:

A. Acclimate materials in an environment of 65°-75°F for at least 24 hours prior to beginning installation.

B. Installation areas shall be enclosed and weatherproofed before installation commences.

PART 2 - PRODUCTS

2.1 MATERIALS:

A. Stainless-steel sheet: ASTM A240-09c.

B. Fasteners: Nonmagnetic stainless-steel bolts, and other fasteners compatible with items being fastened. Use security-type fasteners where exposed to view.

2.2 CORNER GUARDS:

A. Surface-mounted, metal corner guards: Fabricated from one-piece, formed or extruded metal with formed edges; with 90- or 135-degree turn to match wall condition.

1. Acceptable manufacturers:
   a. Basis of design: Construction Specialties, Inc., CO Series.
   b. American Floor Products Co., Inc.
   c. Babcock Davis (formerly Arden Architectural Specialties, Inc.)
   d. Balco, Inc.
   e. IPC Door and Wall Protection Systems; Division of InPro Corporation.
   f. Korogard Wall Protection Systems; a division of RJF International Corporation.
   g. Pawling Corporation.
   h. Tepromark International, Inc.

B. Characteristics:
1. Material: Stainless steel, Type 304.
   a. Thickness: Minimum 0.0625".
   b. Finish: Directional satin, No. 4.
2. Wing size: Nominal 3-1/2" by 3-1/2".
3. Corner radius: 1/8".
4. Height: 72" beginning at top of wall base.
5. Mounting: Flat-head, countersunk screws through factory-drilled mounting holes.

PART 3 - EXECUTION

3.1 EXAMINATION:

A. Examine substrates and wall areas, with Installer present, for compliance with requirements for installation tolerances and other conditions affecting performance of work.

B. Examine walls to which impact-resistant wall protection will be attached for blocking, grounds, and other solid backing that have been installed in the locations required for secure attachment of support fasteners.
1. For impact-resistant wall protection units attached with adhesive or foam tape, verify compatibility with and suitability of substrates, including compatibility with existing finishes or primers.

C. Proceed with installation only after unsatisfactory conditions have been corrected.

3.2 PREPARATION:

A. Complete finishing operations, including painting, before installing impact-resistant wall protection system components.

B. Before installation, clean substrate to remove dust, debris, and loose particles.

3.3 INSTALLATION:

A. General: Install impact-resistant wall protection units level, plumb, and true to line without distortions. Do not use materials with chips, cracks, voids, stains, or other defects that might be visible in the finished Work.

B. Install impact-resistant wall protection units in locations and at mounting heights indicated on drawings

1. Provide splices, mounting hardware, anchors, and other accessories required for a complete installation.
2. Provide anchoring devices to withstand imposed loads.
3. Where splices occur in horizontal runs of more than 20'-0", splice aluminum retainers and plastic covers at different locations along the run, but no closer than 12".

3.4 CLEANING:

A. Immediately after completion of installation, clean plastic covers and accessories using a standard, ammonia-based, household cleaning agent.

B. Remove excess adhesive using methods and materials recommended in manufacturer’s product data.

END OF SECTION

SECTION 10426

SIGNAGE AND GRAPHICS

PART 1 - GENERAL

1.1 SUBMITTALS:

A. Shop drawings: Submit for door signs, indicating sizes, finishes and installation details.

B. Product data: Submit manufacturer's standard specifications and installation instructions.

1.2 QUALITY ASSURANCE:

A. Applicable standards:
1. Aluminum Association (AA), standards as referenced herein.
2. American Iron and Steel Institute (AISI).
3. Americans with Disabilities Act (ADA).

1.3 DELIVERY, STORAGE AND HANDLING:

A. Deliver signs and plaque for interior installation only after building is enclosed and designated areas are ready to receive work.

B. Cover or otherwise protect finished surfaces from damage or stains for remainder of work.

PART 2 - PRODUCTS

2.1 DOOR AND DIRECTIONAL SIGNS AND NUMBERS:

A. Acceptable manufacturers:
1. APCO Graphics, Inc.
2. ASI-Modulex, Inc.
3. Best Sign Systems, Inc.
4. Vomar Products, Inc.

B. Characteristics:
1. Type: Cast acrylic plastic sheet signs.
2. Sign: In sizes and thickness indicated on drawings.
3. Letter styles, sizes, copy, and detail requirements: As indicated on drawings.
5. Colors: As selected by Architect from manufacturer’s premium color range.
6. Mounting: Concealed adhesive.
7. Locations: As indicated on drawings.

PART 3 - EXECUTION

3.1 INSTALLATION:

A. Install signage using specified fasteners, level, plumb and true to line, in accord with manufacturer's product data, at locations shown or directed by Architect.

B. Mounting heights above finish floor: As indicated on drawings. Comply with ADA requirements.

C. Just prior to Date of Substantial Completion, clean and polish surfaces. Remove stains and repair or replace damaged work.

END OF SECTION

SECTION 10441

WARNING SIGNS

PART 1--GENERAL

1.01 DESCRIPTION

This section specifies informational and accident prevention signs.

1.02 OPERATING AND DESIGN REQUIREMENTS

A. GENERAL:

Accident prevention signs shall conform as to design with OSHA Section 1910.145 of Subpart J, Part 1910, Chapter XVII, Title 29 of the Code of Federal Regulations. Exit signs shall conform with Section 1910.37(g) of the OSHA Safety and Health Standard for General Industry, Article 10, Section 10.113 of the Uniform Fire Code, and where applicable with local fire regulations.

In addition to the signs identified on the schedule in Part 3 of this section, the following shall be provided:

1. Exit signs shall be provided in accordance with Section 16500.

2. "Caution Automatic Equipment May Start at Any Time" signs shall be provided in accordance with paragraph 11000-2.07.

3. Signs for emergency eyewashes and shower units shall be provided in accordance with Section 15424.

4. Signs for utility stations shall be provided in accordance with the drawings.

5. Signs for the UV disinfection system shall also be provided in accordance with Section 11737.

B. DESIGN REQUIREMENTS:

1. SIZE: Sign size shall be as follows:

   A - 14 inch x 20 inch
   B - 10 inch x 14 inch
   C - 7 inch x 10 inch

2. TYPE: The sign type shall be as follows:

Type	Message
I	CAUTION--AUTOMATIC EQUIPMENT MAY START AT ANY TIME
II	DANGER--480 VOLTS
III	CAUTION--CORROSIVE CHEMICALS
IV	DANGER--DO NOT DRINK THIS WATER
VIII	DANGER--HIGH VOLTAGE
IX	DANGER--CONFINED SPACE ENTRY
XI	EAR PROTECTION REQUIRED BEYOND THIS POINT
XII	CAUTION--HIGH TEMPERATURE
XIX	CAUTION--AUTOMATIC DOOR
XXV	OVERHEAD CRANE CRUSH HAZARD--STAY OUT FROM UNDER OVERHEAD CRANE LOADS
XXVI	CAUTION--UV RADIATION

3. Six Emergency Evacuation plan signs 14” x 20 “ showing the building rooms and the emergency evacuation route shall be provided. These should show an arrow indicating evacuation route and assembly areas. Location for mounting to be provided by the Construction Manager during construction.

PART 2--PRODUCTS

2.01 GENERAL

Sign lettering shall be single stroke and shall contrast in color with the background. For those messages for which there are international symbols, the international symbols shall be used. Chain mounted signs shall have lettering on both sides.

2.02 MATERIALS

Signs shall be 0.100-inch thick fiberglass with embedded fadeproof legends.

PART 3--EXECUTION

Signs shall be distributed as follows. Cost for installation of all signs (including spares are included within contract). Signs shall include mounting posts and hardware –fiberglass for corrosive and indoor areas, and stainless steel for exterior:

Location	Number	Size	Message	Mount
All 480 volt junction boxes	--	--	II	Box
Ferric Storage Tanks	2	B	III	On Tank
Caustic Storage Tank	4	B	III	On Tank
Acetic Acid Storage Tank	2	B	III	On Tank
Sodium Hypochlorite Tank	2	B	III	On Tank
Electrical Room	3	B	VIII	Door
Influent Pump Station	4	B	IX	Wall or Post
Headworks Odor Control Unit	1	B	IX	On Odor Control Unit
Membrane Odor Control Unit	1	B	IX	On Odor Control Unit
Influent Pump Station	1	B	IX	Wall

Headworks Building Roll-Up Doors	4	B	XIX	Wall
Membrane Gallery Roll-Up Door	1	B	XIX	Wall
Membrane Gallery Bridge Crane	4	B	XXV	Post
Membrane Bridge Crane	4	B	XXV	Post
Blowers	6	B	XII	Post
UV Disinfection System	2	B	XXVI	Post
Evacuation Route Spare Signs	6	A	Evac Route	Wall
	6	B	II	Post
	4	B	III	
	6	B	IV	
	12	B	V	
	12	B	VII	
	4	B	VIII	
	6	B	IX	
	2	B	XI	

END OF SECTION

SECTION 10500

METAL LOCKERS

PART 1 - GENERAL

1.1 SUBMITTALS:

A. Shop drawings: Indicate locker layout, methods of attachment and accessory items and hardware. Include proposed numbering system for each locker room.

B. Product data: Submit copies of manufacturer's product specifications and installation instructions.

C. Color samples: Submit manufacturer's color chips for color selection by Architect.

1.2 DELIVERY, STORAGE AND HANDLING:

A. Deliver lockers only after closing in of building.

B. Handle products to prevent bending, racking or otherwise damaging lockers. Protect prefinished surfaces from marring. Damaged products shall not be installed and shall be removed from project site.

PART 2 - PRODUCTS

2.1 LOCKERS:

A. Acceptable manufacturers; subject to compliance with specified requirements:
1. ASI Storage Solutions Inc.
2. List Industries, Inc.
3. Lyon Metal Products, Inc.
4. Penco Products, Inc.
5. Republic Storage Systems LLC.

B. Locker types and sizes:
1. Type: Double-tier.
2. Size: As indicated on drawings.

C. Characteristics:
1. Locker body: Minimum 24 ga. cold-rolled sheet steel, flanged at connections of sides, back, top and bottom. Locker body shall be assembled with galvanized steel bolts spaced at 9" o. c., maximum.
2. Door frame: Minimum 16 ga. cold-rolled steel, welded construction, formed with integral door strike. Provide cross frame member between upper and lower units.
3. Door: Minimum 16 ga. cold-rolled sheet steel. Form door edges with right angle flanges on horizontal edges; channel shaped on vertical edges.

4. Sloping hoods, closure panels, shelves and similar accessories: Minimum 24 ga. cold-rolled steel; exposed edges flanged.

D. Hardware:
1. Latching device: Spring-actuated slide latch engaging latch hooks on door frame. Slide latch shall be enclosed in door assembly but be removable for service or replacement.
2. Latch hooks: Fabricated of minimum 13 ga. cold-rolled steel. Provide two latch hooks.
3. Rubber silencers: Provide one silencer at each latch hook.
4. Handle: Lift type metal controlling latching device; chrome-plated finish. Attach handle to door assembly with fasteners concealed on door exterior. Handle shall have integral padlock eye.
5. Hinges: 2" by 0.050" thickness, five-knuckle full loop with non-removable pin, attached to door and frame; two per door.
6. Coat hooks: Manufacturer's standard design. Provide one double-prong ceiling hook and three single-prong wall-mounted hooks per locker; bolt-attached.
7. Number plates: Factory-installed aluminum with 3/8" high etched numerals.

E. Locking provisions: Latching device prepared to receive padlocks. Padlocks are not to be included in this Contract.

F. Finish for locker components: Manufacturer's standard baked enamel finish, applied over phosphate-treated steel, colors as selected by Architect from manufacturer’s standard selection. A maximum of two colors may be used.

G. Ventilation: Six louvers at top and bottom of each door.

H. Bases: 6" high legs with closure panels.

PART 3 - EXECUTION

3.1 INSTALLATION:

A. Assemble and install lockers at locations indicated, plumb, level and rigid. Set lockers on metal legs with closure panels and secure lockers to walls using 1/4" toggle bolts spaced at 2'-0" o. c., horizontally.

B. Locker doors shall operate without sticking or binding. Test hardware for proper operation.

C. Clean finished surfaces just prior to Date of Substantial Completion. Touch up minor scratches to match prefinished surfaces.

END OF SECTION

SECTION 10523

FIRE PROTECTION SPECIALTIES

PART 1 - GENERAL

1.1 SUMMARY:

A. Related work specified elsewhere:
   1. Gypsum board systems.
   2. Concrete unit masonry.
   3. Painting and coating.

1.2 SUBMITTALS:

A. Shop drawings: Indicate extinguisher location, size, mounting height and method of installation. Show cabinet installation details, including fire protection enclosure where cabinet is located in fire-rated wall assembly.

B. Product data: Indicate material types, finishes, ratings, hardware, sizes, fabrication and installation details. Include sample of cabinet door sign.

1.3 QUALITY ASSURANCE:

A. Applicable standards; standards of the following as referenced herein:
   1. ASTM International (ASTM).
   2. Americans with Disabilities Act (ADA).
   3. Factory Mutual (FM).
   4. Underwriters Laboratories, Inc. (UL).
   5. Inchcape Testing/Warnock Hersey (WH).

1.4 DELIVERY, STORAGE AND HANDLING:

A. Deliver and store in protective packaging to prevent soiling and physical damage.

B. Handle to prevent damage to finished surfaces and operating mechanisms.

1.5 PROJECT/SITE CONDITIONS:

A. Protection: Protect prefinished surfaces from damage or staining. Provide protective covering following installation for duration of project.

B. Coordinate installation of built-in cabinets with wall construction.

1.6 INSPECTION SERVICE:

A. Extinguishers shall have an inspection certification tag attached, indicating date of charge and service agent's name and address. Charge date shall not be earlier than sixty days prior to Date of Substantial Completion. Service agent shall be located within 50 miles of project.

B. Provide an inspection service agreement for inspection and servicing of extinguishers for one year following date of initial charge, as well as for servicing and recharging extinguishers failing to hold charge within the initial one-year period. Recharging extinguishers due to use or vandalism shall not be included in service agreement.

PART 2 - PRODUCTS

2.1 PORTABLE FIRE EXTINGUISHERS:

A. Acceptable manufacturers; subject to compliance with specified requirements:
1. J. L. Industries, Inc.
2. Basis of deign: Larsen Mfg. Co.
3. Potter-Roemer Div./Smith Industries, Inc.

B. Dry chemical type in steel container: UL-rated 4A:60B:C, 10-lb nominal capacity, multi-purpose dry chemical in enameled-steel container.

C. Container characteristics:
1. Label: UL and FM.
2. Accessories: Pressure-indicating gauge, hose and nozzle.
3. Operation: Pull-pin and squeeze grip for multiple controlled release.

2.2 FIRE EXTINGUISHER BRACKETS:

A. Description: Manufacturer's standard wall bracket designed to support extinguisher securely in vertical position on wall or centered in cabinet.

2.3 TRIMMED RECESSED CABINETS:

A. Acceptable products; subject to compliance with specified requirements:
1. Basis of design: Larsen Mfg. Co., Architectural Series, Vertical Duo.
2. J. L. Industries, Inc., Cosmopolitan.
3. Potter-Roemer Div./Smith Industries, Inc., Alta Series.

B. Characteristics:
1. Type: Semi-recessed cabinet.
2. Cabinet: Minimum 20 ga. cold-rolled steel, one-piece formed construction, prefinished in manufacturer's standard white baked enamel.
3. Size: Coordinate cabinet size to accept fire extinguisher.
4. Door:
   a. Style: Vertical window glazed with tempered glass.

b. Construction: Roll-formed, one-piece tubular construction formed from minimum 0.050" thickness aluminum, dark bronze anodized finish.

5. Trim:
   a. Type: Maximum 1-1/2" square projecting corner trim semi-recessed installation.
   b. Trim construction: Roll-formed, one-piece tubular construction formed from minimum 0.050" thickness aluminum, dark bronze anodized finish.
6. Hardware: Full length piano hinge, roller catch.
7. Pull: Pulls shall comply with ADA requirements. Provide manufacturer's standard pull handle. Provide cast pull with raised lettering spelling "FIRE".

2.4 SURFACE-MOUNTED FIBERGLASS CABINETS:

A. Acceptable manufacturers; subject to compliance with specified characteristics:
   1. Basis of design: J. L. Industries, FB Series Fiberglass Fire Extinguisher Cabinet.
   2. Larsen's Manufacturing Co.
   3. Potter-Roemer Div./Smith Industries, Inc.

B. Characteristics:
   1. Type: Surface-mounted fiberglass cabinet resistant to moisture, temperature extremes and chemicals.
   2. Construction:
      a. Tub and door: Molded fiberglass.
      b. Gasketing: Door shall have full-perimeter rubber gasket.
      c. Handle: Corrosion-resistant aluminum.
      d. Hinge: Full-length, stainless steel.
      e. Latches: Two stainless steel snap latches.
   3. Finish: UV-resistant red finish with 5" by 9" “Fire Extinguisher” white lettering.

PART 3 - EXECUTION

3.1 CABINET INSTALLATION:

A. Install cabinets plumb and level, anchored to structural elements using not less than two anchors, each, top and bottom of each cabinet. Anchors shall be type and size recommended by cabinet manufacturer for substrate encountered, concealed within closed cabinet, with exposed heads finished to match cabinet interior.

B. Provide blocking built into walls at anchorage locations.

C. Where cabinet is installed in a fire-rated wall assembly, provide fire-rated wall construction around cabinet.

D. Conceal edges of rough opening into which cabinet is installed with cabinet assembly.

E. Mounting heights: As indicated on drawings and as follows:
   1. Maximum forward reach to equipment shall be 4'-0" above finished floor level.
   2. Maximum side reach to equipment shall be 4'-6" above finished floor level.
   3. Mounting heights shall meet ADA and NFPA requirements.

3.2 EXTINGUISHER INSTALLATION:

A. Install extinguishers at Date of Substantial Completion, indicating acceptable charge pressure and tagged to show charge date and service agent.

B. Install wall-hung extinguishers on wall mounting bracket. Secure bracket to wall structure with not less than two anchors.

C. Mounting heights: As indicated on the drawings and as follows:
   1. Maximum forward reach to equipment shall be 4'-0" above finished floor level.
   2. Maximum side reach to equipment shall be 4'-6" above finished floor level.
   3. Mounting heights shall meet ADA and NFPA requirements.

D. Install cabinet-mounted extinguishers in cabinets using wall mounting bracket attached to back wall of cabinet.

E. Install and secure extinguishers in plumb, vertical position with name and operating instructions visible on front of extinguisher.

3.3 CLEANING AND PROTECTION:

A. Protect installed equipment and finished surfaces from damage or defacement. Replace items which cannot be repaired to satisfaction of Architect.

B. Prior to date of Substantial Completion, clean and polish interior and exterior surfaces.

3.4 EXTINGUISHER SCHEDULE:

A. Provide 10 lb. multi-purpose type extinguishers in semi-recess mounted cabinet in locations as indicated or as directed by Architect.

B. Provide one 10 lb. multi-purpose type extinguisher, wall bracket mounted, in each mechanical, electrical, telephone and equipment room, in locations as indicated or as directed by Architect.

END OF SECTION

SECTION 10530

CANOPIES

PART 1 - GENERAL

1.1 SUMMARY:

A. Work of this section includes roll-formed aluminum overhead hanger rod style canopies.

1.2 PERFORMANCE REQUIREMENTS:

A. Canopy shall conform to local building codes.

B. Determine if specific load requirements have been established for canopies and if stamped calculations are required for location in which canopy is installed.

1.3 SUBMITTALS:

A. Submit manufacturer s standard literature and specifications for canopies.

B. Submit shop drawings showing structural component locations/positions, material dimensions and details of construction and assembly.

1.4 QUALITY ASSURANCE:

A. Field measurement: Confirm dimensions prior to preparation of shop drawings when possible.

B. Design calculations: Submit design calculations, indicating compliance with specified performance criteria. Indicate fastener types and spacings. Design calculations shall bear the seal of a professional Engineer licensed in the State of Georgia. Indicate that Engineer has reviewed shop drawings.

1.5 DELIVER, STORAGE, HANDLING:

A. Deliver and store all canopy components in protected areas.

1.6 WARRANTIES:

A. Finish warranty: Warrant fluoropolymer coating to remain free of checking, crazing, peeling, chalking or fading for a period of five years, beginning at Date of Substantial Completion.

PART 2 - PRODUCTS

2.1 MANUFACTURERS:

A. Acceptable manufacturers:
1. Basis of design: Mapes Industries, Lumishade.
2. Architectural Shade Products.
3. Dittmer Architectural Aluminum.
4. MASA Architectural Canopies.

2.2 MATERIALS:

A. Decking shall consist of an interlocking roll-formed 2 1/2 W style pan (minimum .032 aluminum.)

B. Intermediate framing members shall be extruded aluminum, alloy 6063-T6, in profile and thickness shown in current manufacturer's product data.

C. Hanger rods and attachment hardware shall be powder coated.

D. Fascia shall be extruded aluminum (minimum .125 aluminum). Match Mapes profile option "J".

E. Wall mount at concrete: Through bolt.

2.3 FINISHES:

A. Finish:
1. Exposed aluminum components and components to which exterior sealant is applied: Fluoropolymer coating finish:
a. Two coat, shop-applied, baked-on, fluoropolymer coating system based on minimum 70% Arkema Group, Kynar 500 or Solvay Solexis, Inc., Hylar 5000 resin (Polyvinylidene fluoride, PVDF), formulated by a licensed manufacturer and applied by manufacturer's approved applicator to meet AAMA 2605-05.
b. Color: Custom (non-exotic) color to match Architect's sample.
2. Unexposed aluminum components: Mill finish.

2.4 FABRICATION:

A. Ship canopies in preassembled sections for ease of installation.

B. Connections shall be mechanically assembled utilizing 3/16 fasteners with a minimum shear stress of 350 lb. Pre-welded or factory-welded connections are not acceptable.

C. Decking shall be designed with interlocking roll-formed aluminum members.

D. Concealed drainage. Water shall drain from covered surfaces into intermediate

trough and be directed to either the front for front drainage or to the rear for ground level discharge via one or more designated downspouts.

E. Size: As indicated on drawings.

F. Hangar rod configuration: Manufacturer's standard.

PART 3 - EXECUTION

3.1 INSPECTION:

A. Confirm that surrounding area is ready for the canopy installation.

B. Confirm dimensions and elevations to be as indicated on drawings.

C. Erection shall be performed by an approved installer and scheduled after all concrete, masonry and roofing in the area is completed

3.2 INSTALLATION:

A. Installation shall be in accord with manufacturer's shop drawings.

B. Protect finish during handling and erection.

C. After installation, entire system shall be left in a clean condition.

END OF SECTION

SECTION 10810

TOILET ACCESSORIES

PART 1 - GENERAL

23. SUMMARY:

1. Related work specified elsewhere:
1. Concrete unit masonry.
2. Gypsum board.
3. Toilet compartments.

24. DESIGN CRITERIA:

1. In order to be acceptable, products shall comply with the following criteria:
1. All accessories shall be products of a single manufacturer.
2. Keying: Keyed accessories shall be keyed alike, unless otherwise specified.
3. Operation: Control and operating mechanisms shall be operable with one hand, without tight grasping, pinching, or twisting of wrist, and with a maximum force of 5 lbf.
4. Cabinet construction:
1. Material: Entire cabinet shall be constructed of 18-8 S, Type 304 stainless steel, minimum 22 ga., except that doors of flush face cabinets shall be minimum 18 ga.
2. Finish: Satin finish, vertical grain stainless steel; matching in color and graining within the same cabinet.
3. Unit construction: Seamless or welded; welds ground smooth prior to finishing on exposed surfaces. Cabinets shall have full, continuous backs and sides. Flush face units shall be seamless construction.
4. Hinges: Doors shall be hung on continuous stainless steel piano hinges.
5. Stops: Doors shall have spring or cable stops located inside cabinet to limit opening to 120 degrees maximum.
6. Bumpers: Doors shall have rubber bumpers to cushion door closing.
7. Exposed edges: Hemmed, returned or flanged; sharp edges not allowable.
8. Paper towel dispensers: Adaptable to dispense C-fold, multi-fold or single-fold towels without use of additional towel trays.
9. Feminine napkin/tampon vendors: Changeable coin mechanisms and coin slot identification; lockable coin box keyed differently from other accessories.
10. Combination towel/waste units: Capable of mounting such that towel dispenser is located at 3'-4" above finish floor, while allowing at least 4" base below unit.
5. Soap dispensers:
1. Valves: All-purpose dispensing type; piston and exposed components of Type 302/304 stainless steel or chrome-plated brass.
2. Lavatory-mounted dispensers: Capable of being filled from top, without removal of container.
3. Lavatory dispenser container: Minimum 32 oz. capacity, rigid polyethylene.

1.3 SUBMITTALS:

A. Product data: Include catalog cuts and data sheets indicating size, material and finish, complete parts list and installation procedures for each accessory. Where manufacturer's standard products vary with design criteria, indicate compliance with design criteria.

2. Samples: Submit one actual sample of each accessory for approval if requested by Architect. Upon approval, samples will be returned for incorporation into project.

1.4 QUALITY ASSURANCE:

A. Applicable standards; comply with the following as referenced herein: Americans with Disabilities Act (ADA).

1.5 PROJECT/SITE CONDITIONS:

A. Protection: Maintain manufacturer's protective covering on accessories until final cleanup of installation.

B. Coordinate this work with work of other trades into which accessories are to be installed.

1.6 WARRANTY:

A. Mirrors: Warrant mirrors for five years against silver spoilage.

PART 2 - PRODUCTS

2.1 TOILET ACCESSORIES:

A. Acceptable manufacturers; subject to compliance with specified design criteria:
1. A & J Washroom Accessories.
2. American Specialties, Inc. (ASI).
3. Bobrick Washroom Equipment, Inc.
4. Bradley Washfountain Co.

B. Basis of design for each accessory type is scheduled on drawings. Toilet accessories of similar design and construction, as manufactured by other acceptable manufacturers, may be submitted for Architect's consideration. Acceptance is subject to compliance with specified design criteria, as evidenced by submittal of specified product data, and Architect’s approval.

PART 3 - EXECUTION

2.4 EXAMINATION:

A. Check opening scheduled to receive recessed or semi-recessed accessories for correct dimensions, depth, plumbness of blocking or frames, and preparation that would affect installation of accessories.

2.5 INSTALLATION:

A. Install accessories level, plumb and in indicated location. Installation methods shall be as indicated in product data for substrates encountered. Securely attach to blocking or framing members.

B. Mounting heights: As indicated on drawings and meeting ADA accessibility requirements.

C. Grab bars:

1. Secure grab bars to wood by direct attachment to studs or to blocking installed between studs.
2. Secure grab bars to metal stud partition by direct attachment to steel studs, using 1/4" diameter toggle bolts, or using minimum 12 ga. by 3" wide steel anchor plates, continuous length required for attachment of grab bar flanges.
   a. Attach anchor plates to studs on grab bar side of wall, using self-tapping sheet metal screws.
   b. Where grab bar flanges mount on separate walls, anchor plate shall be of length to span between studs at individual flange locations.
   c. Attach grab bars to anchor plates using stainless steel machine screws.
3. Attach grab bars to masonry walls using concealed mounting plate, minimum 1/4" diameter through-bolt and minimum 10 ga. steel backup plate.
4. Attach grab bars to concrete walls using 1/4" diameter stainless steel machine screws and metal expansion shields.
5. Attach grab bars to toilet partitions using wing tapped steel spacers and stainless steel machine screws. Where grab bar is attached to one side of partition only, spacer shall have minimum 16 ga. satin finish stainless steel backup plate.

D. Conceal evidence of drilling, cutting and fitting to adjacent finishes.

2.6 ADJUSTING AND CLEANING:

A. Adjust operating parts of accessories for proper operation.

B. Clean and polish exposed surfaces prior to Date of Substantial Completion.

C. Deliver accessory schedule, keys and parts manual as part of project closeout documents.

END OF SECTION

SECTION 11000

GENERAL REQUIREMENTS FOR EQUIPMENT

PART 1--GENERAL

1.01 DESCRIPTION

A. SCOPE:

This section specifies general requirements which are applicable to all mechanical equipment. The Contractor is responsible for ensuring that all mechanical equipment meets the requirements of this section in addition to the specific requirements of each individual equipment specification section.

B. EQUIPMENT LISTS:

Equipment lists, presented in these specifications and as specified on the drawings, are included for the convenience of the Engineer and Contractor and are not complete listings of all equipment, devices and material required to be provided under this contract. The Contractor shall prepare his own material and equipment takeoff lists as necessary to meet the requirements of this project manual.

1.02 QUALITY ASSURANCE

A. ARRANGEMENT:

The arrangement of equipment shown on the drawings is based upon information available to the Owner at the time of design and is not intended to show exact dimensions conforming to a specific manufacturer. The drawings are, in part, diagrammatic, and some features of the illustrated equipment installation may require revision to meet actual submitted equipment installation requirements; these may vary significantly from manufacturer to manufacturer. The contractor shall, in determining the cost of installation, include these differences as part of his bid proposal. Structural supports, foundations, connected piping, valves, and electrical conduit specified may have to be altered to accommodate the equipment actually provided. No additional payment shall be made for such revisions and alterations.

B. REFERENCES:

This section contains references to the documents listed below. They are a part of this section as specified and modified. Where a referenced document cites other standards, such standards are included as references under this section as if referenced directly. In the event of conflict between the requirements of this section and those of the listed documents, the requirements of this section shall prevail.

Unless otherwise specified, references to documents shall mean the documents in effect at the time of Advertisement for Bids or Invitation to Bid (or on the effective date of the Agreement if there were no Bids). If referenced documents have been discontinued by the issuing organization, references to those documents shall mean the replacement documents issued or otherwise identified by that organization or, if there are no replacement documents, the last version of the document before it was discontinued. Where document dates are given in the following listing, references to those documents shall mean the specific document version associated with that date, regardless of whether the document has been superseded by a version with a later date, has been discontinued or has been replaced.

Reference	Title
ABMA Std 9	Load Ratings and Fatigue Life for Ball Bearings
ABMA Std 11	Load Ratings and Fatigue Life for Roller Bearings
ANSI B1.1	Unified Inch Screw Threads (UN and UNR Thread Form)
ANSI B1.20.1	Pipe Threads, General Purpose (Inch)
ANSI B16.1	Gray Iron Pipe Flanges and Flanged Fittings, (Classes 25, 125, and 250)
ANSI B18.2.1	Square and Hex Bolts and Screws (Inch Series)
ANSI B18.2.2	Square and Hex Nuts (Inch Series)
ANSI S2.19	Mechanical Vibration – Balance Quality Requirements of Rigid Rotors, Part 1: Determination of Permissible Unbalance, Including Marine Applications

C. UNIT RESPONSIBILITY:

The Contractor shall cause equipment assemblies made up of two or more components to be provided as a working unit by the unit responsibility manufacturer, where specified. The unit responsibility manufacturer shall coordinate selection, coordinate design, and shall provide all mechanical equipment assembly components such that all equipment components furnished under the specification for the equipment assembly, and all equipment components specified elsewhere but referenced in the equipment assembly specification, is compatible and operates reliably and properly to achieve the specified performance requirements. Unless otherwise specified, the unit responsibility manufacturer shall be the manufacturer of the driven component equipment in the equipment assembly. The unit responsibility manufacturer is designated in the individual equipment specifications found elsewhere in this project manual. Agents, representatives or other entities that are not a direct division of the driven equipment manufacturing corporation shall not be accepted as a substitute for the driven equipment manufacturer in meeting this requirement. The requirement for unit responsibility shall in no way relieve the Contractor of his responsibility to the Owner for performance of all systems as provided in paragraph 00710-2.04.

The Contractor shall ensure that all equipment assemblies provided for the project are products for which unit responsibility has been accepted by the unit responsibility manufacturer(s),

where specified. Unit responsibility for related components in a mechanical equipment assembly does not require or obligate the unit responsibility manufacturer to warranty the workmanship or quality of component products not manufactured by them. Where an individual specification requires the Contractor to furnish a certificate from a unit responsibility manufacturer, such certificate shall conform to the content, form and style of Form 11000-C specified in Section 01999, shall be signed by an officer of the unit responsibility manufacturer's corporation and shall be notarized. No other submittal material will be processed until a Certificate of Unit Responsibility has been received and has been found to be satisfactory. Failure to provide acceptable proof that the unit responsibility requirement has been satisfied will result in withholding approval of progress payments for the subject equipment *even though the equipment may have been installed in the work.*

D. BALANCE:

Unless specified otherwise, for all machines 10 HP and greater, all rotating elements in motors, pumps, blowers and centrifugal compressors shall be fully assembled, including coupling hubs, before being statically and dynamically balanced. All rotating elements shall be balanced to the following criteria:

$$U_{per} = 6.015 \frac{GW}{N}$$

Where:

U_{per}	=	permissible imbalance, ounce-inches, maximum
G	=	Balance quality grade, millimeters per second
W	=	Weight of the balanced assembly, pounds mass
N	=	Maximum operational speed, rpm

Where specified, balancing reports, demonstrating compliance with this requirement, shall be submitted as product data. Equipment balance quality grade shall be *G* 2.5 (*G* = 2.5 mm/sec) or better in accordance with ANSI S2.19.

PART 2--PRODUCTS

2.01 FLANGES AND PIPE THREADS

Flanges on equipment and appurtenances provided under this section shall conform in dimensions and drilling to ANSI B16.1, Class 125. Pipe threads shall conform in dimension and limits of size to ANSI B1.1, coarse thread series, Class 2 fit.

Threaded flanges shall have a standard taper pipe thread conforming to ANSI B1.20.1. Unless otherwise specified, flanges shall be flat faced.

Flange assembly bolts shall be heavy pattern, hexagonal head, carbon steel machine bolts with heavy pattern, hot pressed, hexagonal nuts conforming to ANSI B18.2.1 and B18.2.2. Threads shall be Unified Screw Threads, Standard Coarse Thread Series, Class 2A and 2B, ANSI B1.1.

2.02 BEARINGS

Unless otherwise specified, equipment bearings shall be oil or grease lubricated, ball or roller type, designed to withstand the stresses of the service specified. Each bearing shall be rated in accordance with the latest revisions of ABMA Methods of Evaluating Load Ratings of Ball and Roller Bearings. Unless otherwise specified, equipment bearings shall have a minimum L-10 rating life of 50,000 hours. The rating life shall be determined using the maximum equipment operating speed.

Grease lubricated bearings, except those specified to be factory sealed and lubricated, shall be fitted with easily accessible grease supply, flush, drain and relief fittings. Extension tubes shall be used when necessary. Grease supply fittings shall be standard hydraulic alemite type.

Oil lubricated bearings shall be equipped with either a pressure lubricating system or a separate oil reservoir type system. Each oil lubrication system shall be of sufficient size to safely absorb the heat energy normally generated in the bearing under a maximum ambient temperature of 60 degrees C and shall be equipped with a filler pipe and an external level indicator gage.

All bearings accessible to touch, and located within 7 feet measured vertically from floor or working level or within 15 inches measured horizontally from stairways, ramps, fixed ladders or other access structures, shall either incorporate bearing housings with sufficient cooling to maintain surface temperature at 65 degrees C or less for continuous operation at bearing rated load and a 50 degrees C ambient temperature or shall be provided with appropriate shielding shall be provided that will prevent inadvertent human contact.

2.03 V-BELT ASSEMBLIES

Unless otherwise specified, V-belt assemblies shall be Dodge Dyna-V belts with matching Dyna-V sheaves and Dodge Taper-lock bushings, Wood's Ultra V-belts with matching Ultra-V sheaves and Wood's Sure-Grip bushings, or equal.

Sheaves and bushings shall be statically balanced. Additionally, sheaves and bushings which operate at a peripheral speed of more than 5500 feet per minute shall be dynamically balanced. Sheaves shall be separately mounted on their bushings by means of three pull-up grub or cap tightening screws. Bushings shall be key seated to the drive shaft.

Belts shall be selected for not less than 150 percent of rated driver horsepower and, where two sheaves sizes are specified, shall be capable of operating with either set of sheaves. Belts shall be of the antistatic type where explosion proof equipment is specified.

2.04 PUMP SHAFT SEALS

A. GENERAL:

Seals for water and wastewater pump shafts shall be either stuffing box or mechanical seals. For industrial wastewater service, or for fluids other than water or municipal wastewater, the recommendations of the seal manufacturer shall be followed for selection of appropriate seals. Unless specified otherwise, stuffing boxes and mechanical seals shall conform to the requirements set forth in this paragraph.

B. MECHANICAL SEALS:

Unless otherwise specified in the detailed pump specifications, mechanical seals shall be split mechanical seals requiring no field assembly, other than assembly around the shaft and insertion into the pump. They shall be self-aligning, and self-centering, single seals. They shall be of a nondestructive (nonfretting) type requiring no wearing sleeve for the shaft. Shafts for pumps specified with mechanical seals shall be furnished with no reduction in size through the seal area (no shaft sleeve). Where the detailed specifications call for cartridge instead of split seals, all other requirements of this paragraph apply.

Metal parts shall be Type 316 or 316L stainless steel. Springs shall be Hastelloy C, Elgiloy, or other Duplex SS selected for resistance to chloride attack. Rotary faces shall be silicon carbide or chrome oxide. Stationary faces shall be silicon carbide for solids bearing fluid service and carbon for clean water service. Elastomers shall be ethylene propylene or fluorocarbon. Mechanical seals shall be suitable for operation between full vacuum (0 psia) up to 200 percent of the maximum specified operating pressure, but in any event not less than 200 psig.

Seal chambers shall be provided with vented solids removal restriction bushings except for enclosed line shaft pumps where the seal barrier fluid is used for line shaft bearing lubrication. The bushing shall both control the amount of flushing water flow and restrict solids and gas accumulation from the seal face area.

Candidate seals include:

1. Chesterton 442 seals provided with Chesterton/SpiralTrac solids removal restriction bushings Version N or D, as recommended by EnviroSeal Engineering Products, Ltd, Nova Scotia, Canada.

2. AESSEAL RDS seals with Cyclops bushing.

3. John Crane 3710 seals with Type 24SL bushing.

Seals on pumps for contaminated water service (sludge, grit, wastewater, scum, reclaimed water, etc.) shall be drilled and tapped for connection of a clean water flushing supply.

Seals for all vertical pumps (whether column or volute type) shall be provided with a second flush connection. Vertical pumps shall have a vent valve attached to the mechanical seal to eliminate air from the seal chamber prior to pump start; start-up procedures shall include venting instructions; and for remotely started pumps, the vent system shall be automated. Where specified in the detailed specifications, permissive confirmation automatic vent systems shall be provided.

C. SHAFT PACKING:

Where shaft packing is specified, stuffing boxes shall be tapped to permit introduction of seal liquid and shall hold a minimum of five rows of packing. Stuffing boxes shall be face attached. Stuffing box and shaft shall be suitable for field installation, without machining or other modifications, of the mechanical seal specified in paragraph 11000-2.04.B for the applicable pump and operating conditions.

Unless otherwise specified, lantern rings shall be bronze or Teflon, packing shall be die-molded packing rings of non-asbestos material suitable for the intended service and as recommended by the manufacturer, and glands shall be bronze, two piece split construction. Lantern rings shall be of two-piece construction and shall be provided with tapped holes to facilitate removal. Lantern rings shall be drilled and tapped 1/4 NC-20. The impeller end of the packing on all but line shaft pumps with external source water lubricated bearings shall be fitted with a SpiralTrac, Version P packing protection system as manufactured by EnviroSeal Engineering Products, Ltd, Nova Scotia, Canada.

The section of each shaft or impeller hub that extends through or into the stuffing box shall be fitted with a replaceable stainless steel sleeve with a Brinell hardness of not less than 500. The sleeve shall be held to the shaft to prevent rotation and shall be gasketed to prevent leakage between the shaft and the sleeve. Minimum shaft sleeve thickness shall be 3/8 inch.

2.05 COUPLINGS

Unless otherwise specified in the particular equipment sections, equipment with a driver greater than 1/2 HP, and where the input shaft of a driven unit is directly connected to the output shaft of the driver, shall have its two shafts connected by a flexible coupling which can accommodate angular misalignment, parallel misalignment and end float, and which cushions shock loads and dampens torsional vibrations. The flexible member shall consist of a tire with synthetic tension members bonded together in rubber. The flexible member shall be attached to flanges by means of clamping rings and cap screws, and the flanges shall be attached to the stub shaft by means of taper lock bushings which shall give the equivalent of a shrunk-on fit. There shall be no metal-to-metal contact between the driver and the driven unit. Each coupling shall be sized and provided as recommended by the coupling manufacturer for the specific application, considering horsepower, speed of rotation, and type of service.

Where torque or horsepower capacities of couplings of the foregoing type is exceeded, Thomas-Rex, Falk Steel Flex, or equal, couplings will be acceptable provided they are sized in accordance with the equipment manufacturer's recommendations and sizing data are submitted. They shall be installed in conformance to the coupling manufacturer's instructions.

2.06 GUARDS

Exposed moving parts shall be provided with guards which meet all applicable OSHA requirements. Guards shall be fabricated of 14-gage steel, 1/2-13-15 expanded metal screen to provide visual inspection of moving parts without removal of the guard. Guards shall be galvanized after fabrication and shall be designed to be readily removable to facilitate maintenance of moving parts. Reinforced holes shall be provided. Lube fittings shall be extended through guards.

2.07 CAUTION SIGNS

Equipment with guarded moving parts which operates automatically or by remote control shall be identified by signs reading "CAUTION - AUTOMATIC EQUIPMENT MAY START AT ANY TIME". Signs shall be constructed of fiberglass material, minimum 1/8 inch thick, rigid, suitable for post mounting. Letters shall be white on a red background. The sign size and pattern shall be as shown on the drawings. Signs shall be installed near guarded moving parts.

2.08 GAGE TAPS, TEST PLUGS AND GAGES

Gage taps shall be provided on the suction and discharge sides of pumps, blowers and compressors. Pressure and vacuum gages shall be provided where specified. Gage taps, test plugs, and gages shall be as specified in Divisions 15 and 17, respectively.

2.09 NAMEPLATES

Nameplates shall be provided on each item of equipment and shall contain the specified equipment name or abbreviation and equipment number. Equipment nameplates shall be engraved or stamped stainless steel and fastened to the equipment in an accessible and visible location with stainless steel screws or drive pins.

2.10 LUBRICANTS

The Contractor shall provide for each item of mechanical equipment a supply of the required lubricant adequate to last through the specified commissioning period. Lubricants shall be of the type recommended by the equipment manufacturer and shall be products of the Owner's current lubricant supplier. The Contractor shall limit the various types of lubricants by consolidating them, with the equipment manufacturer's approval, into the least number of different types. Not less than 90 days before the date shown in his construction schedule for starting, testing and adjusting equipment (Section 01660), the Contractor shall provide the Owner with three copies of a list showing the required lubricants, after consolidation, for each item of mechanical equipment. The list shall show estimated quantity of lubricant needed for a full year's operation, assuming the equipment will be operating continuously.

2.11 ANCHOR BOLTS

Anchor bolts shall be designed for lateral forces for both pullout and shear in accordance with the provisions of Section 05501. Unless otherwise stated in the individual equipment specifications, anchor bolt materials shall conform to the provisions of Section 05501.

2.12 SPARE PARTS

Spare parts, wherever required by detailed specification sections, shall be stored in accordance with the provisions of this paragraph. Spare parts shall be tagged by project equipment number and identified by part number, equipment manufacturer, and subassembly component (if appropriate). Spare parts subject to deterioration, such as ferrous metal items and electrical components, shall be properly protected by lubricants or desiccants and encapsulated in hermetically sealed plastic wrapping. Spare parts with individual weights less than 50 pounds and dimensions less than 2 feet wide, or 18 inches high, or 3 feet in length shall be stored in a wooden box with a hinged wooden cover and locking hasp. Hinges shall be strap type. The box shall be painted and identified with stenciled lettering stating the name of the equipment, equipment numbers, and the words "spare parts." A neatly typed inventory of spare parts shall be taped to the underside of the cover.

2.12 CMMS DATABASE

Equipment nameplate data, Spare parts, and recommended maintenance procedures shall be provided in accordance with section 01730. This information shall be submitted by the contractor for all mechanical, electrical, and process equipment on the project in an excel format. Data shall include the following:

10. All Nameplate data
11. Equipment number
12. Equipment cost
13. Required spare parts
14. Spare Parts cost
15. Anticipated Useful life of Equipment
16. Standard maintenance procedures activity
17. A description of maintenance activities
18. Maintenance procedure frequency

PART 3--EXECUTION

Installation of equipment accessories included in this section shall be as recommended by the equipment manufacturer unless otherwise specified in the individual equipment specification section.

END OF SECTION

SECTION 11002

RIGID EQUIPMENT MOUNTS

PART 1--GENERAL

1.01 DESCRIPTION

A. SCOPE:

This section specifies minimum requirements for rigid equipment mounts (baseplates, soleplates, and mounting blocks) and their installation on equipment pads. Completed equipment supports shall consist of equipment pads, equipment anchors, and rigid equipment mounts (baseplates, soleplates, or mounting blocks) set in grout.

Unless alternate requirements for equipment mounts are specified in the applicable equipment specification, the requirements of this section shall be applied to rigid mounts for all rotating or reciprocating equipment that is used to mix, convey, or pressurize fluids (gases and liquids). The requirements of this section shall also apply whenever referenced in specifications for other types of equipment. If conflict exists between this section and requirements of individual equipment manufacturers, the more restrictive requirements shall prevail. Mounting and alignment of equipment installed on equipment mounts (baseplates, soleplates, and mounting blocks) is specified in Section 11005.

B. DEFINITIONS:

Specific equipment mounting terminology used in this section conforms to the following definitions:

1. Baseplate: Fabricated (welded structural steel elements), cast, or plate steel base providing a common mounting element on which the legs, feet, or mounting surfaces of equipment are mounted by means of bolted connections.

2. Soleplate: A machined plate, spanning an opening in the floor or equipment pad, providing a common mounting element on which the legs, feet, or mounting surfaces of equipment are mounted by means of bolted connections.

3. Mounting Blocks: Multiple smaller baseplates on which individual legs, feet or equipment supports are mounted when equipment or drivers are not fastened to a common baseplate or sole plate.

4. Equipment Pad: Concrete foundation (block or slab) supporting and elevating equipment mounts above the supporting structural floor slab or local grade.

5. Mounting Pads: Thickened or raised areas of baseplates and soleplates where the feet or mounting surfaces of mounted equipment and drivers are bolted and/or doweled to the baseplate or soleplate.

6. Leveling Blocks: Temporary steel blocks placed under baseplates, soleplates, or a mounting block at leveling positions (at equipment anchors) for the purpose of leveling baseplates, soleplates, or mounting blocks prior to grouting.

7. Shims: Thin stainless steel plates of a uniform thickness installed on top of Leveling Blocks for fine adjustment of level. Shims may also be used between equipment or drivers and baseplates, soleplates, or mounting blocks for equipment alignment purposes specified in Section 11005.

8. Wedges: Pairs of uniformly tapered metal blocks that are stacked with the tapered surfaces reversed (relative to the other wedge) so that the top and bottom surfaces of the wedges are parallel. Wedges are used between equipment pads and baseplates, soleplates, or mounting blocks for the purpose of leveling baseplates, soleplates, or mounting blocks.

9. Mounting Stud: Threaded rod or bolts anchored to baseplates, soleplates, or mounting blocks for the purpose of mounting equipment or ancillary devices onto baseplates, soleplates, or mounting blocks.

10. Reinforcement Dowels: Steel reinforcement rods embedded in concrete, across a cold joint, for the purpose of transferring loads or force across the joint.

11. Machine Alignment Dowels: Tapered diameter rods inserted in tapered diameter holes for the purpose of aligning machinery. The practice of drilling tapered diameter holes through machinery and baseplates so that Machine Alignment Dowels may be inserted to facilitate alignment of machinery is known as Doweling.

12. Leveling Position: A location on the top of a concrete equipment pad where leveling tools and equipment will be temporarily installed or used for the purpose of leveling baseplates, soleplates, and mounting blocks prior to grouting.

13. Grout Manufacturer: Refers to the manufacturer of the epoxy grout system used for installation of rigid equipment mounts.

14. Grout Manufacturer’s Technical Representative(s): Refers to the technical representative(s) of the Grout Manufacturer.

C. EQUIPMENT MOUNTING REQUIREMENTS:

Unless otherwise specified, equipment and drivers shall be rigidly mounted on a common cast iron or fabricated steel baseplate or soleplate grouted into place on a concrete equipment pad. Under no circumstances shall baseplates, soleplates, or mounting blocks be grouted directly to concrete slabs or floors. Equipment that uses an interdependent equipment and driver mounting configuration (equipment that is bolted onto the driver frame and equipment that supports the driver entirely from the equipment frame) may be bolted directly on concrete or grout surfaces of equipment pads if the driver is less than five horsepower. Bolting equipment directly on concrete or grout surfaces of equipment pads is not acceptable for equipment and drivers that do not have an interdependent equipment and driver mounting configuration.

1.02 QUALITY ASSURANCE

A. REFERENCES:

This section contains references to the following documents. It is a part of this section as specified and modified. In case of conflict between the requirements of this section and those of the listed document, the requirements of this section shall prevail.

Unless otherwise specified, references to documents shall mean the documents in effect at the time of Advertisement for Bids or Invitation to Bid. If referenced documents have been discontinued by the issuing organization, references to those documents shall mean the replacement documents issued or otherwise identified by that organization or, if there are no replacement documents, the last version of the document before it was discontinued. Where document dates are given in the following listing, references to those documents shall mean the specific document version associated with that date, whether or not the document has been superseded by a version with a later date, discontinued or replaced.

Reference	Title
ANSI/HI 1.4	Centrifugal Pumps – Installation, Operation and Maintenance
ANSI/HI 2.4	Vertical Pumps – Installation, Operation and Maintenance
API RECOMMENDED PRACTICE 686	Recommended Practices for Machinery Installation and Installation Design
ASTM E329	Inspection and Testing Agencies for Concrete, Steel, and Bituminous Materials as Used in Construction
MIL-PRF-907E	Anti-Seize Thread Compound, High Temperature
SSPC	Society for Protective Coatings Specifications, Vol. 2
IBC	2001 International Building Code (including local amendments)

B. QUALITY CONTROL BY CONTRACTOR:

To demonstrate conformance with the specified requirements for rigid equipment mounts, the Contractor shall provide the services of an independent testing laboratory that complies with the requirements of ASTM E329. The testing laboratory shall sample and test equipment mount related materials as indicated in this Section (11002). Costs of testing laboratory services shall be borne by the Contractor.

For equipment with drivers 20 horsepower and greater, the Contractor shall furnish the services of a grout manufacturer's technical representative that has been factory trained by the grout manufacturer. The grout manufacturer's technical representative shall perform training and quality control of epoxy grout installation for rigid equipment mounts as indicated in this section (11002).

1.03 SUBMITTALS

The following information shall be provided in accordance with the submittal requirements specified in Section 01300.

1. A copy of this specification section, with addendum updates included, (referenced sections need not be included for Section 11002) with each paragraph check-marked to indicate specification compliance or marked to indicate requested deviations from specification requirements. Check marks shall denote full compliance with a paragraph as a whole. If deviations from the specifications are indicated, and therefore requested by the Contractor, each deviation shall be underlined and denoted by a number in the margin to the right of the identified paragraph, referenced to a detailed written explanation of the reasons for requesting the deviation. The Engineer shall be the final authority for determining acceptability of requested deviations. The remaining portions of the paragraph not underlined will signify compliance on the part of the Contractor with the specifications. *Failure to include a copy of the marked-up specification sections, along with justification(s) for any requested deviations to the specification requirements, with the submittal shall be sufficient cause for rejection of the entire submittal with no further consideration.* Copies of this specification section shall be numbered and marked (specification number and equipment number) for inclusion (filing) with the associated equipment submittal requirements.

2. Schedule of rigid equipment mount installations specified in paragraph 11002-2.01.

3. Name, employer and certificates or other information documenting compliance with the journeyman qualifications requirements for millwrights who will install rigid equipment mounts, as specified in paragraph 11002-3.03. C.

4. Certificates or other documentation issued by the epoxy grout

manufacturer that demonstrates that the grout manufacturer's technical representative has been factory trained on installation of epoxy grout for equipment mounts, as specified in paragraph 11002-1.02 B. 2.

5. Shop drawings for all equipment pads, equipment anchors, and baseplate, soleplate or mounting block details. Shop drawings shall depict size and location of equipment pads and reinforcement; equipment drains; equipment anchor, size, location, and projection; expansion joint locations; elevation of top of grout and grout thickness; elevation of top of baseplate; soleplate; or mounting block; size and location of electrical conduits; and any other equipment mounting features embedded in equipment pads. Shop drawings for equipment pads, equipment anchors, and baseplate, soleplate, or mounting blocks shall be numbered and marked (specification number and equipment number) for inclusion (filing) with the associated equipment submittal requirements.

PART 2--PRODUCTS

2.01 GENERAL

Prior to initiating any installation efforts, the Contractor shall produce a rigid equipment mount installation schedule containing the expected dates for installing equipment anchors and preparation of equipment pads for leveling, grouting, and final equipment anchor clamping for each item of equipment. The schedule shall list the equipment, by equipment tag number, and shall list applicable equipment specification section, motor horsepower, and name of the Contractor's representative responsible for quality control during installation of rigid equipment mounts. The schedule shall be accompanied by written verification of equipment anchor clamping torque from the manufacturer of each item of equipment to be installed with rigid equipment mounts.

2.02 CONCRETE EQUIPMENT PADS

Concrete equipment pads shall be as shown in the structural details for equipment pads and equipment anchors for rigid mounted equipment.

The Contractor shall submit equipment anchor calculations for all equipment with drivers 20 horsepower and greater. Equipment anchor calculations shall demonstrate that equipment anchor size, embedment, and edge distance comply with the local building code requirements and are sufficient to resist the maximum lateral and vertical forces specified in paragraph 11000-2.11. Equipment anchor calculations shall be sealed by a registered structural or civil engineer licensed in the State of Georgia.

2.03 BASEPLATES, SOLEPLATES, AND MOUNTING BLOCKS

A. GENERAL:

Unless otherwise specified, Type I baseplates, soleplates, and mounting blocks shall be a minimum of 1 inch thick for equipment with drivers 20 horsepower and larger. All Type I baseplates, soleplates, and mounting blocks shall have edges of surfaces bearing on grout rounded to a radius of not less than 0.25 inch. Horizontal corners of Type I baseplates, soleplates, or mounting blocks shall be rounded to a radius of not less than two inches to avoid producing stress risers on the grouted foundation. Grout pouring holes (minimum 4 inches in diameter for epoxy grout, minimum 2 ½ inches in diameter for cementitious nonshrink grout) shall be provided in all baseplates and soleplates and all baseplates and soleplates shall have grout release holes. Mounting blocks may be grouted without grout pouring holes provided that no dimension of the mounting block (width or length) exceeds 18 inches. Grout relief or vent holes (minimum 1 inch in diameter) shall be provided in all baseplates, soleplates, and mounting blocks. Internal stiffeners shall be provided on all cast and fabricated baseplates and shall be designed to allow free flow of grout from one section of the baseplate to another. The minimum acceptable opening in cross bracing and stiffeners shall be 2 inches high by 6 inches in width. All welds shall be continuous and free from skips, blowholes, laps and pockets.

Mounting holes for equipment anchors shall be drilled through baseplates, soleplates, and mounting blocks. Mounting holes for equipment anchors shall not be burned out and they shall not be open slots. All mounting studs shall be Type 316 stainless steel. An anti-seize or anti-galling compound, as specified in paragraph 11002-2.06, shall be applied to all mounting stud threads prior to installing nuts on mounting studs. Terminations requiring connections to baseplates, soleplates, or mounting blocks shall be acorn nuts welded to the under side of the baseplate or nuts welded to the underside of the baseplate and plugged with cork, plastic plugs or grease. In no case shall the fastener terminate only into the metal base. Where baseplates, soleplates, or mounting blocks are leveled using jackscrews, jackscrew threads shall be tapped in thickened pads or otherwise in sufficient metal to provide ease in adjusting level.

Mounting pads for equipment shall be machined after all welding and stress relieving and shall be coplanar within 0.002 inch per foot in all directions. Mounting pads shall extend not less than 0.5 inch beyond the perimeter of the foot or mounting surface of the mounted equipment, in any direction.

Equipment baseplates shall provide common support for the equipment and driver (and flywheel, if one is specified). Baseplates for equipment with drivers 20 horsepower and greater shall be furnished with eight transverse alignment (horizontal) positioning jackscrews for alignment of equipment drivers on horizontal surfaces of baseplates. Two of the eight transverse alignment/positioning jackscrews shall be installed in perpendicular directions in a horizontal plane at the mounting position for each corner or foot of the equipment driver. (Eight additional jackscrews shall be provided for transverse alignment of the flywheel, if flywheels are specified.)

B. TYPE I BASEPLATES:

Type I baseplates shall be plate or fabricated structural steel baseplates with thickened steel mounting pads for doweling and bolting equipment to the baseplate. The baseplates shall be rectangular in shape for equipment other than centrifugal refrigeration machines and pump baseplates, which may be "T" or "L" shaped to accommodate the equipment drive and accessories. Baseplates for split case pumps shall include supports for suction and discharge elbows, if required by the specified configuration. Perimeter members shall be beams with a minimum depth equal to 1/10th of the longest dimension of the baseplate. Beam depth need not exceed 14 inches provided that the deflection and misalignment is kept within acceptable limits as determined by the manufacturer.

C. TYPE II/III BASEPLATES: (NOT USED)

D. TYPE IV BASEPLATES:

Type IV baseplates shall be cast iron with thickened mounting pads for doweling and bolting equipment to the baseplate. Cast iron baseplates shall be sealed in accordance with the requirements for bleeding surfaces specified in Section 09900 prior to grouting.

E. SOLEPLATES:

Where soleplates are provided, the underside shall be scribed with the words “THIS SIDE DOWN” using welding rod material prior to milling the mounting pad for each equipment foot or mounting surface. Mounting surfaces and mounting pads on soleplates shall be milled flat to a tolerance of not less than 0.002 inch per foot in all directions. Soleplates shall be machined for an indexed fit to the mounted equipment or driver.

F. MOUNTING BLOCKS:

Where equipment is fabricated or cast with feet or mounting surfaces that are not fastened to a common baseplate or soleplate, as in dry-pit bottom suction pumps, the equipment may be supported on individual concrete piers or equipment pads in lieu of a common baseplate or soleplate and equipment pad. In such instances, the equipment shall be supported at the feet or mounting surfaces on individual mounting blocks, which shall be leveled and grouted into place on the individual piers or equipment pads as specified in this section. Vertical volute-type pumps weighing more than 2000 pounds shall be mounted on mounting blocks under each foot or mounting surface for the pump. All mounting blocks shall be furnished with jackscrew threads (three locations, minimum) tapped in the mounting block for the purpose of leveling mounting blocks with jackscrews.

2.04 GROUT FOR EQUIPMENT PADS

A. EPOXY GROUT FOR EQUIPMENT MOUNTING:

Unless otherwise specified, grout for setting bearing surfaces of baseplates, soleplates, and mounting blocks on equipment pads shall be Epoxy Grout for Equipment Mounting as specified in Section 03600. Where the term epoxy grout is used in the context of details and specifications for equipment mounting it shall mean Epoxy Grout for Equipment Mounting.

B. CEMENTITIOUS NONSHRINK GROUT:

Cementitious Nonshrink Grout, specified in Section 03600, may be used for setting bearing surfaces of baseplates, soleplates, or mounting blocks on equipment pads where equipment drivers are 20 horsepower and smaller and the combined weight of equipment and driver is less than 1000 pounds. Where the term nonshrink grout or cementitious grout is used in the context of details and specifications for equipment mounting it shall mean Cementitious Nonshrink Grout. Training and quality control by the grout manufacturer's technical representative is not required for rigid equipment mounts installed with cementitious non-shrink grout.

2.05 EPOXY PRIMER

Epoxy primer shall be a lead free, chrome free, rust inhibitive, two-component epoxy primer specifically designed for use on metal substrates and in conjunction with epoxy grout. The epoxy primer shall be a product of the epoxy grout manufacturer.

2.06 ANTI-SEIZE/ANTI-GALLING COMPOUND

Anti-seize or anti-galling compound shall be a molybdenum disulfide and graphite combination in an aluminum complex base grease conforming to MIL-PRF-907E. Acceptable products include Jet Lube 550 by Jet Lube, Inc., E-Z Break by LA-CO, or equal.

2.07 PRODUCT DATA

The following information shall be provided in accordance with the product data requirements specified in Section 01300:

1. Equipment anchor calculations specified in paragraph 11002-2.02.

2. Results of grout strength tests, as specified in paragraph 11002-3.03 D.

3. Completed Rigid Equipment Mount Installation Inspection Checklist Forms (11002-A), as specified in paragraph 11002-3.02 B.

4. List of Contractor's equipment installation staff that has completed epoxy grout manufacturer's grout installation training specified in paragraph 11002-3.02 A.

PART 3--EXECUTION

3.01 GENERAL

Grouting for installation of equipment on equipment pads shall take place prior to connecting any field piping or electrical and instrumentation systems. Unless the Engineer accepts an alternate installation procedure in writing, baseplates, soleplates, and mounting blocks shall be leveled and grouted with the equipment removed. Pumps shall be installed in accordance with this section and ANSI/HI 1.4 or ANSI/HI 2.4, as appropriate for the type of pumping equipment installed.

Connecting piping with flexible connections and/or expansion joints shall be anchored such that the intended uses of these joints are maintained in the piping system without imposing strain on the equipment connections.

Where an equipment manufacturer's installation requirements include a rigid connection between the machine and connecting piping systems, the Contractor shall delete any flexible coupling (including equipment connection fittings) shown on the drawings and install the equipment in the following manner, in lieu of installing the flexible coupling:

1. The equipment pad shall be prepared as shown on the details for rigid equipment mounts

2. The baseplate, soleplate, or mounting blocks supporting the equipment shall be installed, leveled, and grouted in place as specified in this section.

3. The equipment shall be installed, aligned and doweled in place as specified in Section 11005.

4. The piping shall be installed and aligned to the equipment connections and the field piping connections without welding one of the joints for one section of pipe between the equipment connection and the field piping and all valving. All flanged joints shall be bolted up and pressure tested.

5. All piping shall be fully supported by supports designed to accept their full weight and thrust forces.

6. The final sections of piping shall be aligned with the equipment and field connections without the use of jacks, chain falls or other devices to force it into alignment.

7. The final piping joints shall be welded only after the previous steps have been completed and accepted by the Engineer.

3.02 EPOXY GROUT TRAINING AND QUALITY CONTROL

A. EPOXY GROUT TRAINING

Prior to commencing rigid equipment mount installation work on equipment pads, the Contractor shall furnish the services of a grout manufacturer's technical representative to conduct a training school for the workers that will be using the epoxy grout for rigid equipment mount installations.. The school shall be not less than 4 hours in length and shall cover all aspects of using the products, from mixing to application. This requirement, however, shall not be construed as relieving the Contractor of overall responsibility for this portion of the work. The epoxy grout manufacturer shall furnish a list of school attendees that have been satisfactorily trained to perform epoxy grout installation for equipment mounting.

B. EPOXY GROUT QUALITY CONTROL

For equipment with drivers 20 horsepower and greater, the epoxy grout manufacturer's technical representative shall provide quality control services for epoxy grout installation in rigid equipment mounts. The epoxy grout manufacturer's technical representative shall be on site to inspect and verify that the application personnel have successfully performed surface preparation, epoxy grout application, and Quality Control Inspection in accordance with these specifications for a representative portion of the epoxy grout installation work.

Specifically, the epoxy grout manufacturer's technical representative shall perform the following services for at least one rigid equipment mount installation for each equipment type and size:

1. Inspect ambient conditions during various phases of epoxy grouting installation for conformance with the epoxy grout manufacturer's requirements.

2. Inspect the surface preparation of concrete substrates onto which epoxy grout materials are to be applied, for conformance to the specified application criteria, including but not limited to substrate profile, degree of cleanliness, and moisture.

3. Inspect the surface preparation of the metallic substrates onto which the epoxy primer is to be applied.

4. Inspect the epoxy-primed metallic substrate for coverage and adhesion.

5. Inspect preparation and application of epoxy grout form work for conformance to the specifications.

6. Inspect and record that the "pot life" of epoxy grout materials is not exceeded during installation.

7. Inspect epoxy grout for cure.

8. Inspect and record that localized repairs made to grout voids are in conformance with the specification requirements.

9. Conduct a final review of completed epoxy grout installation for conformance to these specifications.

10. Attest to conformance of the Contractor's work by signing appropriate entries in the "Rigid Equipment Mount Inspection Checklist," form 11002-A in Section 01999.

3.03 INSTALLATION

A. CONCRETE EQUIPMENT PAD PREPARATION:

After the concrete is fully cured, the top of the equipment pad shall be roughened by chipping the surface. Chipping shall remove all laitance and defective or weak concrete and result in a rough surface profile with a 0.25 inch minimum amplitude. Chipping shall expose broken aggregate without dislodging unbroken aggregate from the cement matrix and shall not cause fractures below the concrete surface. Leveling surfaces of the concrete that have been finished smooth and level for baseplate, soleplate, or mounting block leveling at equipment anchors shall be protected from damage during chipping. A light duty, hand held pneumatic chipper with a chisel type tool shall be used for chipping the equipment pad concrete surface. Abrasive blast, bush-hammer, jack hammers with sharp chisels, heavy chipping tools, or needle gun preparation of concrete surfaces to be grouted is not acceptable.

Prior to leveling activities, satisfactory removal of defective or weak concrete shall be demonstrated in the presence of the Engineer by operating the chipper on the chipped concrete surface at locations identified by the Engineer. The chipped surface of the concrete shall be such that the final baseplate, soleplate, or mounting block elevation results in the grout manufacturer's recommended grout thickness between the surface of the equipment pad and the lower baseplate flange, underside of the soleplate or underside of mounting block.

All dust, dirt, chips, oil, water, and any other contaminants shall be removed and the surface protected with plastic sheeting until grout is installed.

Concrete equipment pad surfaces that have been finished smooth and level for use as leveling positions shall be protected from damage during chipping activities. Alternatively, leveling positions may be restored on chipped surfaces. Leveling positions shall be restored by installing leveling blocks or leveling plates for jackscrews on a high compressive strength epoxy putty (Philadelphia Resins, Phillybond Blue 6A, or equal). Leveling blocks and leveling plates shall be installed level on the epoxy putty.

B. BASEPLATES, SOLEPLATES, AND MOUNTING BLOCKS:

All surfaces of baseplates, soleplates, and mounting blocks to be in contact with epoxy grout shall be cleaned to SSPC SP-6 and shall be primed with epoxy primer within 8 hours of cleaning.

C. LEVELING:

All machinery shall be mounted and leveled by journeyman millwrights. Precision surveying equipment shall be used for leveling. Machinists' spirit levels will not be permitted for leveling purposes for any baseplate, soleplate, or mounting block with a plan dimension greater than 4 feet. Baseplates and mounting blocks shall be leveled to a maximum tolerance of 0.002 inch per foot or as otherwise required by the equipment manufacturer, if more stringent. Soleplates shall be leveled to 0.0005 inch per foot or as otherwise required by the equipment manufacturer, if more stringent. An anti-seize or anti-galling compound specified in paragraph 11002-2.06 shall be applied to all equipment anchor threads prior to beginning baseplate, soleplate, or mounting block leveling.

All baseplates, soleplates, and mounting blocks shall be leveled against steel surfaces (jackscrew plates, leveling blocks, leveling nuts, support plates, or other steel surfaces). Use of other materials for leveling purposes is strictly and specifically prohibited. Unless otherwise specified, baseplates, mounting blocks, and soleplates shall be leveled as indicated in the leveling details. Leveling equipment and tools shall be stainless steel leveling blocks and shims, steel wedges, or jackscrews bearing on leveling plates. Leveling nuts may be used for leveling baseplates and soleplates weighing less than 200 pounds. The use of leveling nuts for leveling mounting blocks is not permitted.

After baseplates, soleplates, or mounting blocks have been leveled on the leveling equipment, the Contractor shall clamp the baseplates, soleplates, or mounting blocks in position by installing the equipment anchor nuts and washers. Clamping torque shall be less than the final clamping torque specified in paragraph 11002-2.01, but sufficient to hold the baseplate, soleplate, or mounting block in position. The Contractor shall verify that the correct level and position of the baseplate, soleplate, or mounting block has been maintained after clamping on the leveling equipment.

Leveling blocks shall be stainless steel, four inches square and 1-1/2 inches thick with an open-ended slot terminating in the center for the equipment anchor. Leveling blocks shall be machined flat on all horizontal surfaces and placed under the baseplate or soleplate at each equipment anchor. Shims shall be pre-cut stainless steel, slotted for removal after grouting, and shall extend not less than three inches beyond the baseplate, soleplate or mounting block. Leveling blocks and shims shall be coated with a light oil just prior to beginning the leveling and grouting work. Shims shall be placed so the tabs on the shims are easily accessible.

D. GROUTING:

Grout forms shall be built of minimum 0.75 inch thick waterproof plywood and shall be securely braced (minimum brace size shall be two-by-four lumber). Forms shall be designed for a minimum of 6 inches hydrostatic head above the final elevation of the grout, to assist in flow during installation. Equipment mounting grout shall be furnished with expansion joints installed at four to six foot intervals, perpendicular to the centerline of baseplates.

Forms shall be coated with three coats of paste wax on all areas that will come in contact with the grout to prevent the grout from bonding to the forms. Forms shall be waxed before assembly to prevent accidental application of wax to surfaces where the grout is to

bond. Before any forms are installed, all concrete surfaces that will contact epoxy grout shall be free from any foreign material, such as oil, sand, water, wax, grease, etc. Forms shall be liquid-tight. Any open spaces or cracks in forms, or at the joint between forms and the foundation, shall be sealed off, using sealant, putty, or caulking compound. All outside vertical and horizontal edges of the grout shall have 45-degree chamfers as indicated in the equipment anchor details for rigid equipment mounts. Match chamfers in concrete portions of the equipment pad. Block outs shall be provided at all shimming and leveling positions to allow removal of leveling equipment and tools after the grout has cured. Jackscrews shall be coated with a light oil or other acceptable bond-breaking compound prior to grouting.

The 45-degree perimeter chamfer strip shall be located at the final elevation of the grout. The final elevation of the grout on baseplates with exposed I-beam or C-channel supports shall be at the top of the lower support flange. The top of the grout, on all other baseplates soleplates, and mounting blocks, shall be at least 1.0 inch above the bottom or underside of the baseplate, soleplate, or mounting block and shall not be higher than the top of the baseplate, soleplate, or mounting block. The grout's final elevation shall not be so high as to bond the equipment anchor nut and washer.

The resin and hardener for epoxy grout for equipment mounting shall be mixed in accordance with the epoxy grout manufacturer's recommendations. Epoxy grout shall be placed at the center of one end of the baseplate or soleplate and worked toward the ends in such a manner as to force the air out from beneath the baseplate or soleplate and out the vent holes, to eliminate voids. Epoxy grout shall be placed in a manner that avoids air entrapment, using a head box to pour grout into the grout holes. When the head box is moved to the next grout hole, a 6-inch high standpipe shall be placed over the grout hole and filled with grout. Use of vibrating tools and/or jarring (rapping or tapping) forms to facilitate grout flow is not permitted during placement of epoxy grout.

The Contractor shall exercise care to never allow the grout to fall below the baseplate level once the grout has made contact with the baseplate. Grout placement shall be continuous until all portions of the space beneath the baseplate, soleplate, or mounting block have been filled. Subsequent batches of grout shall be prepared so as to be ready when the preceding batch has been placed. Under no circumstances shall the grouting operation be halted because of lack of grout mix. After the entire baseplate is full, 6-inch high standpipes shall be maintained over each grout hole, to continue purging of air. When the grout has started to take an initial set (typically this is determined by a noticeable increase in temperature and no flow of grout at the vent holes) the standpipes shall be removed and excess grout cleaned from all surfaces.

Where the cavity under a baseplate or mounting block extends above the elevation of the top of the bolting flange for the baseplate or mounting block, grouting may be completed in two pours. Under these circumstances, the first grout pour shall be continuous until the lower face of the bolting flange for the baseplate or mounting block is submerged in grout a minimum of one inch. The second grout pour shall be completed with standpipes and air purges as specified in the previous paragraph.

Grout forms shall be checked for leaks throughout grout pours. Leaks shall be repaired immediately to prevent formation of voids. A final check of baseplate, soleplate, or mounting block level and elevation shall be performed before the grout sets.

A grout sample shall be taken for each equipment pad that has a baseplate, soleplate, or mounting block set in grout. The sample shall be placed in a cylinder of sufficient size to yield three two-inch cubes as test samples. The samples shall be tagged with project name, date, time, the equipment number and ambient temperature at the time of placement. Once the epoxy grout cylinder has been completely filled, it shall be placed next to the foundation of the equipment being grouted and allowed to cure for 48 hours. After 48 hours, the test cylinder shall be tested in accordance with the grout manufacturer's recommendations by the independent testing laboratory specified in paragraph 11002-1.02 B. The results shall be reported directly to the Engineer. Forms shall be removed only after the grout has cured sufficiently and upon specific permission from the Engineer.

E. COMPLETION:

Upon acceptance by the Engineer and the equipment manufacturer's representative and after the grout has reached sufficient strength, grout forms and block outs at leveling positions shall be removed. Leveling blocks and shims or wedges and support plates shall be removed, leveling nuts and jack screws shall be backed off to allow the grout to fully support the baseplate, mounting block, or soleplate. Take care not to damage the grout during removal of extended shimming material or leveling equipment and tools.

The equipment anchor nuts shall be tightened, using calibrated indicating torque wrenches, to develop the full clamping force required by the equipment manufacturer.

Equipment anchor nuts shall be tightened in increments of not more than 25 percent of the final torque value in an alternating pattern to avoid stress concentration on the grout surface. After tightening equipment anchor nuts to final values, apply additional wax, grease, or mastic to all exposed portions of the equipment anchor beneath the baseplate, soleplate, or mounting block.

After applying additional wax or mastic to exposed portions of equipment anchors, block outs (pockets) for access to leveling nuts, leveling blocks and shims, or wedges shall be filled with the grout material installed under baseplates, soleplates, or mounting blocks and pointed after the equipment anchor nuts have been tightened to final values. Jackscrews shall be removed and holes in the baseplate, soleplate, or mounting blocks filled with a flexible sealant (silicone rubber) or a short cap screw.

Check for baseplate, soleplate, or mounting block movement (soft foot) by individually loosening and re-tightening each equipment anchor. Vertical movement at each equipment anchor shall be measured and recorded during loosening and retightening and shall not exceed 20 micrometers (0.001 inch). Vertical movement shall be measured using a magnetic-based dial indicator on the baseplate, soleplate, or mounting block referenced to the epoxy grout surface of the equipment pad or other approved method. Soft foot conditions shall be sufficient cause for removal and reinstallation of grout and baseplates, soleplates, or mounting blocks.

Check for grout voids by tapping along the upper surfaces of the baseplate, soleplate, or mounting block. Grout voids shall be sufficient cause for removal and reinstallation of grout and baseplates, soleplates, or mounting blocks. Grout voids shall be marked. At the discretion of the Engineer, grout voids may be repaired as specified in Chapter 5, Section 3.16 of API 686.

3.04 FINAL INSPECTION

The Engineer will conduct a final inspection with the Contractor for conformance to requirements of the contract documents.

END OF SECTION

SECTION 11005

MACHINE ALIGNMENT

PART 1--GENERAL

1.01 DESCRIPTION

This section specifies requirements for alignment of directly coupled mechanical equipment weighing 1000 pounds or more and/or greater than 100 horsepower furnished or modified under this contract. Equipment direct coupled to the motor with drivers 100 horsepower and less and belt or chain driven machinery are specifically exempted from the requirements of this section.

1.02 QUALITY ASSURANCE

A. GENERAL:

All equipment shall be aligned using laser alignment equipment to the tolerances specified by the subject equipment manufacturer or the criteria specified in this section, whichever is more stringent.

B. ALIGNMENT CRITERIA:

Unless otherwise specified by more stringent manufacturers' requirements, all mechanical equipment affected by this section shall be aligned to the following criteria:

Maximum Tolerable Misalignment

Speed, rpm, maximum	Short Couplings (Distance between flex planes ≤ 4")		Spacer Shafts angle at each flex plane in mils/inch or projected offset in mils/inch of spacer length
	Offset (mils)	Angularity (mils/inch)	
600 and less	5.0	1.0	1.8
900	3.0	0.7	1.2
1200	2.5	0.5	0.9
1800	2.0	0.3	0.6
3600	1.0	0.2	0.3
7200	0.5	0.1	0.15

Notes: (1) Soft foot (machine frame distortion) shall be not more than 2.0 mils for any speed.

(2) Separately mounted equipment connected by offset universal joints are exempted from the offset and angularity requirements, but all units must be installed and leveled as specified in this section.

C. ALIGNMENT EQUIPMENT:

Alignment equipment used to perform the work required under this section shall employ laser alignment techniques to achieve the required tolerances. The equipment shall be computer based and its software shall be compatible with current Windows® based spreadsheets and databases. The equipment shall employ a hand-held field computer using a graphic interface to determine actual alignment and necessary corrective action to bring equipment into required tolerance. The link between field measurement components and the computer shall be through cable, infrared, or wireless transmission.

1.03 REFERENCES

This section contains references to the following documents. They are a part of this section as specified and modified. Where a referenced document contains references to other standards, those documents are included as references under this section as if referenced directly. In the event of conflict between the requirements of this section and those of the listed documents, the requirements of this section shall prevail.

Unless otherwise specified, references to documents shall mean the documents in effect at the time of Advertisement for Bids or Invitation to Bid (or on the effective date of the Agreement if there were no Bids). If referenced documents have been discontinued by the issuing organization, references to those documents shall mean the replacement documents issued or otherwise identified by that organization or, if there are no replacement documents, the last version of the document before it was discontinued. Where document dates are given in the following listing, references to those documents shall mean the specific document version associated with that date, regardless of whether the document has been superseded by a version with a later date, discontinued or replaced.

Reference	Title
Shaft Alignment Handbook	Shaft Alignment Handbook, Third edition, John Piotrowski, Marcel Dekker Inc.

PART 2--PRODUCTS

2.01 EQUIPMENT

Laser alignment equipment shall be Rotalign® Ultra as distributed by Ludeca, Inc., of Doral, Florida, or equal.

2.02 ITEMS TO BE FURNISHED TO OWNER:

The following shall be furnished to the Owner upon completion of all alignment work for the project or appropriate portion thereof and prior to substantial completion of the project or portion thereof:

1. All alignment records, in both hard copy and in computer memory. The hard copy shall be signed and dated by the technician performing the alignment work and shall be witnessed by the Engineer.

PART 3--EXECUTION

3.01 GENERAL

After machine base grouting as specified under Section 11002, all machines mounted on baseplates or soleplates specified above shall be aligned as specified under this section.

Alignment work shall be performed by journeyman millwrights skilled in this type of work under the supervision of a technician trained in the use of the laser alignment by the manufacturer or vendor of the alignment equipment. The use of untrained laborers, carpenters or apprentices for this work will not be acceptable.

3.02 PROCEDURE

A. SEQUENCE:

Machines supported on integral feet or support pads shall be leveled, grouted and aligned in the following order: driven machine; intermediate bearings or machines; and driver. Under certain circumstances, such as a diesel engine driving a generator, it may be preferable to reverse this order and set the driver first. The Contractor shall submit a written request for a reversal of the alignment order to the Engineer and the Engineer must approve any change in alignment order in writing before it will be allowed.

B. ALIGNMENT:

All machines shall be rough aligned without any connections to piping, electrical and instrumentation systems. Upon completion of all field connections, alignment shall be rechecked to demonstrate no change. If change has occurred, the Contractor shall eliminate any external forces affecting machine alignment.

Next, soft foot (machine frame distortion) shall be measured and brought to within the permissible tolerances (see paragraph 1.02 B, Note 1). Thereafter, the alignment shall be rechecked and the alignment process repeated if necessary to bring all machinery to final alignment tolerances.

3.03 VERIFICATION

A. FACTORY PERSONNEL:

Where required by other sections in this project manual, factory authorized installation technicians representing the equipment manufacturer shall witness final alignment work. After completion of all alignment work, acceptance of the work shall be documented in writing by factory installation technicians.

B. VERIFICATION:

All alignment work shall be independently checked using the shaft and coupling spool method described in the Shaft Alignment Handbook. All final results of the alignment work shall be subject to inspection and verification by the Engineer.

END OF SECTION

SECTION 11020

VIBRATION AND CRITICAL SPEED LIMITATIONS

PART 1--GENERAL

1.01 DESCRIPTION

This section specifies vibration and critical speed limitations for rotating mechanical equipment. Factory and/or field testing and vibration measurements shall be taken when specified in the individual equipment specification sections.

1.02 VIBRATION LIMITATIONS

A. GENERAL:

Vibration frequencies shall span the range from 5.0 to 5000 Hz. Where specified, measurements shall be obtained while the installed equipment is operating within the specified speed range.

B. CENTRIFUGAL:

1. MACHINES WITH SLEEVE BEARINGS: Unless otherwise specified, centrifugal machines with sleeve bearing shafts shall not exhibit unfiltered RMS readings for vibration displacement in excess of the following:

Shaft speed range, rpm	Displacement, peak to peak, mils
Up to 900	3.5
901-1800	3.0
1801-3000	2.5
3001-4500	2.0
Above 4500	1.6

Displacement measurements shall be taken radially on the shaft at two points at each bearing, except for well pumps which shall be measured at top of motor. Measuring points shall be 90 degrees apart.

2. MACHINES WITH ANTIFRICTION BEARINGS: Unless otherwise specified, centrifugal machines with antifriction bearing shafts shall not exhibit unfiltered RMS readings for vibration velocity in excess of 0.12 inch per second. Velocity measurements shall be taken on one point of each bearing housing.

C. POSITIVE DISPLACEMENT MACHINES:

Unless otherwise specified, positive displacement machines of the rotary, reciprocating and controlled volume types shall operate without any lateral or torsional vibration characteristics that may accelerate wear of the equipment. The Contractor shall provide manufacturer's certification that the manufacturer has inspected the machine under operating conditions and found it to comply with the requirements of this paragraph.

1.03 CRITICAL SPEED REQUIREMENTS

Unless otherwise specified, rotating mechanical equipment shall not exhibit critical speeds within the specified range of operating speeds. Critical speeds for equipment with rigid rotor systems shall be at least 20 percent greater than maximum operating speed. Critical speeds for equipment with flexible shaft-rotor systems shall be at least 15 percent below minimum operating speed and 20 percent above maximum operating speed.

PART 2--PRODUCTS

2.01 PRODUCT DATA

Manufacturer's certified data showing location of critical speeds in relation to operating speeds shall be provided as product data in accordance with Section 01300.

END OF SECTION

SECTION 11050

GENERAL REQUIREMENTS FOR CENTRIFUGAL AND AXIAL FLOW PUMPING EQUIPMENT

PART 1--GENERAL

1.01 DESCRIPTION

A. SCOPE:

This section, when referenced in the detailed specification section, provides minimum requirements applicable to centrifugal and axial flow pumping equipment furnished under this contract. More restrictive requirements, where found in individual pump specifications, shall supersede requirements of this section.

"Detailed pump specification", "detailed specification", "individual pump specification", "referencing section", or words of similar import in this section, shall mean the specification section where the requirements for specific pump performance are presented. "Pumping unit", whenever and wherever used, shall mean the complete pumping assembly, including driver (whether engine, turbine, or motor) and shall include all accessories such as variable speed drives required for motor operation, gear reducers, intermediate shafting and bearings, flywheels, and all supports for all equipment furnished with the pump.

A number of provisions of this section shall be required for a subset of pumps. These requirements (refer to Paragraphs 1.05 and 1.07.A, in this Section) are in addition to requirements applicable to all pumps. The subset of pumps is defined as pumping equipment meeting any of the following criteria:

- All pumping unit specifications where the words "Custom Engineered" appear in the title of the specification section.
- Where a particular Section 11050 provision is specifically cited in the detailed section.

B. DEFINITIONS:

The following definitions apply for classifying pumps specified in this and referencing sections:

1. GENERAL: Terminology and definitions in this Section follow those established in ANSI/HI 9.1 - 9.5, unless otherwise noted.

2. SOLIDS BEARING LIQUIDS: Liquids to be pumped containing, or assumed to contain, solids that require appropriate pump design considerations and/or materials of construction. Solids Bearing Liquids are liquids with settleable solids exceeding 50 mg/L and shall include wastewater, stormwater, primary effluent, return sludge, return activated sludge (RAS), trickling filter circulation, and similar services.

3. CLEAR LIQUIDS: Liquids to be pumped generally free of deleterious solids. Clear Liquids shall include potable water, heat reservoir, raw water, secondary effluent pumping, and similar services.

4. EFFICIENCY: For the purposes of this section and sections referencing this section, efficiency, as related to pumps, shall be the ratio of the pump output power (water horsepower) divided by the pump input power (brake horsepower) required to deliver the total head, with meanings as defined in HI 1.2.3.8 and 2.2.3.8. For column type pumps, it shall be computed inclusive of inlet, bowl, column and discharge head losses.

5. NET POSITIVE SUCTION HEAD – 3 PERCENT REDUCTION (NPSH3): For the purposes of this section and sections referencing this section, NPSH3 shall mean the value of net positive suction head resulting in a reduction of 3 percent in the developed pump discharge head when the pump is tested in accordance with procedures established by the Hydraulic Institute. NPSH3 is the successor designation to NPSHR (net positive suction head required). Where NPSHR is used in the Contract Documents it shall be taken to mean NPSH3.

6. NPSH MARGIN: For the purposes of this section and sections referencing this section, “NPSH Margin” wherever used shall mean Net Positive Suction Head Available (NPSHA) divided by the candidate pump’s Net Positive Suction Head-3 Percent Reduction (NPSH3) for the specific operating condition in question.

1.02 TYPE

Provisions and requirements contained in this section apply specifically to centrifugal and axial flow pumps, both vertical and horizontal, commonly falling into the generic types covered by ANSI/HI 1.1 through 1.4 and 2.1 through 2.4. This section does not apply, except by specific reference, to positive displacement pumps of any type.

1.03 REFERENCES

This section (Section 11050) contains references to the following documents. They are a part of this section and any referencing section as specified and modified. Where a referenced document contains references to other standards, those documents are included as references under this section as if referenced directly. In the event of conflict between the requirements of this section or any referencing section and those of the listed documents, the following order of precedence shall prevail (in the order of primacy):

1. The referencing section.
2. This section.
3. The referenced document.

Unless otherwise specified, references to documents shall mean the documents in effect at the time of Advertisement for Bids or Invitation to Bid (or on the effective date of the Agreement if there were no Bids). If referenced documents have been discontinued by the issuing organization, references to those documents shall mean the replacement documents issued or otherwise identified by that organization or, if there are no replacement documents, the last version of the document before it was discontinued. Where document dates are given in

the following listing, references to those documents shall mean the specific document version associated with that date, regardless of whether the document has been superseded by a version with a later date, discontinued or replaced.

Reference	Title
ABMA 9	Load Ratings and Fatigue Life for Ball Bearings
ABMA 11	Load Ratings and Fatigue Life for Roller Bearings
AISC	American Institute of Steel Construction –Manual of Practice
ANSI/API 610	Standard for Centrifugal Pumps for Petroleum, Petrochemical and Natural Gas Industries
ANSI/ASME B46.1	Surface Texture, Surface Roughness, Waviness and Lay
ANSI/HI 1.1 – 1.4	Rotodynamic (Centrifugal) Pumps
ANSI/HI 2.1 – 2.4	Rotodynamic (Vertical) Pumps
ANSI/HI 9.1 – 9.5	Pumps – General Guidelines
ANSI/HI 9.6.2	Centrifugal and Vertical Pumps for Allowable Nozzle Loads
ANSI/HI 9.6.3	Centrifugal and Vertical Pumps Allowable Operating Region
ANSI/HI 9.6.4	Centrifugal and Vertical Pumps. Vibration Measurements and Allowable Values
ANSI/HI 9.8	Pump Intake Design
ANSI/HI 11.6	Submersible Pump Tests
ANSI/HI 14.6	Rotodynamic Pumps for Hydraulic Performance Acceptance Tests
API 686/PIP REIE 686	Recommended Practices for Machinery Installation and Installation Design
ASME B18.8.2	Taper Pins, Dowel Pins, Straight Pins, Grooved Pins, and Spring Pins (Inch Series)
ASME Code	ASME Boiler and Pressure Vessel Code
ASTM A27	Steel Castings, Carbon, for General Application
ASTM A36	Carbon Structural Steel
ASTM A148	Steel Castings, High Strength, for Structural Purposes
ASTM A322	Steel Bars, Alloy, Standard Grades
ASTM A564	Hot-Rolled and Cold-Finished Age-Hardening Stainless Steel Bars and Shapes
ASTM A571	Austenitic Ductile Iron Castings for Pressure-Containing Parts Suitable for Low-Temperature Service
ASTM A995	Standard Specification for Castings, Austenitic-Ferritic (Duplex) Stainless Steel, for Pressure-Containing Parts, Grades 2A, 3A, or 6A
ASTM B148	Aluminum-Bronze Sand Castings

Reference	Title
AWWA C213	Fusion-Bonded Epoxy Coating for the Interior and Exterior of Steel Water Pipelines
AWWA C550	Protective Epoxy Coatings for Valves and Hydrants
NSF/ANSI 61	Drinking Water System Components – Health Effects
ISO 9001	Quality Management Systems – Requirements, 3rd Ed. (2000)
ISO 10816-1	Mechanical Vibration—Evaluation of Machine Vibration by Measurement on Non-rotating Parts—Part 1: General Guidelines, Annex B, Table B.1. Zone A, Class I, II or II, as applicable. For the purposes of this specification, Annex B of ISO 10816, Part 1 shall form a part of this specification and ISO 10816, Part 1.
ISO 10816-7	Mechanical Vibration—Evaluation of Machine Vibration by Measurement on Non-rotating Parts—Part 7: Rotordynamic Pumps for Industrial Applications, Including Measurements on Rotating Shafts, Annex A, Tables A-1 and A-2 as applicable. For the purposes of this specification, Annex A of ISO 10816, Part 7 shall form a part of this specification and ISO 10816, Part 7.
MIL STD 167-2	Mechanical Vibrations of Shipboard Equipment (Reciprocating Machinery and Propulsion System and Shafting)
Vibration Institute	Vibration Specialist Certification Requirements
Corbo and Malanoski, 1996	Practical Design Against Torsional Vibration, 25th Turbomachinery Symposium, Turbomachinery Laboratory, Texas A & M University, p. 186 – 222
Corbo and Malanoski, 1998	Pump Rotordynamics Made Simple, Pumping Technology, June 1998, p. 202 – 236

1.04 DESIGN REQUIREMENTS – ALL PUMPS:

A. GENERAL:

Equipment furnished under all sections referencing this section shall conform to the requirements and objectives of paragraph 6.1, ANSI/API 610, unless specifically stated in this and the detailed specification section. All components associated with the rotating elements in the drive train, including equipment supports and supports for rotating elements, shall be selected and designed to function without damage or disassembly at reverse rotational speeds up to 150 percent of maximum operational speed during flow reversals through the pump. The complete pumping unit shall operate without overload on any component at any point along the pump's entire full-speed operating curve. Pumps required by virtue of the specified operating conditions to operate against a closed valve or throttled for any period of time exceeding five seconds shall be furnished with drivers sized to operate continuously at the power requirement for that condition even though the power requirements at the rated condition may be less.

With the exception of submersible pumps and the inlet connection for pumps designed to operate in open forebays or wet wells, pump connection nozzles shall be designed for the

loads and moments stipulated in ANSI/HI 9.6.2. Where ANSI/HI 9.6.2 does not cover a specific pump type or category, or where that document is silent on allowable nozzle loads or a particular type of nozzle load (e.g. thermal pipe strain), the Contractor shall furnish documentation from the manufacturer attesting to the limitations on loads and moment forces that can be tolerated on each connection and recommended connection details to be used.

B. PUMP SELECTION:

1. PROVEN DESIGNS: Pumps furnished under all sections referencing this section shall be proven designs that shall have been in service under similar conditions of service with no objectionable performance characteristics for a period of not less than five years. The Contractor shall furnish a detailed list, duly signed by an officer of the pump manufacturer's corporation and notarized, of installations with contact information supporting qualification under this requirement with the information required under paragraph 11050-1.08. In order to satisfy this requirement, listed pump shall be of the same size volute or bowl, discharge case and nozzle size, impeller design (including number of vanes) and shall be operating under similar conditions of pumped fluid, head, capacity, speed, rotation, and Net Positive Suction Head Available (NPSHA).

The Contractor may propose equipment that cannot meet this requirement only under the following conditions:

a. The proposed design has been in successful operation under similar conditions of volute or bowl, discharge case and nozzle size, impeller design (including number of vanes), pumped fluid, head, capacity, rotation and NPSHA, but at a higher speed for a period of not less than three years;

or

b. The proposed design has been in operation in designs where both larger and smaller nozzle size pumps have been in service for a period of not less than five years, and impeller design (including number of vanes), pumped fluid, head, capacity, speed and NPSHA are similar to that for the proposed installation. Under no circumstances will an existing pump design operating at a higher speed than those currently in service in similar applications be considered.

If the proposed pump qualifies under either exception (a. or b.), the Contractor shall demonstrate, by operation of a test pump in a fully equipped hydraulic test facility, that the proposed pump in the size and at the speed proposed, with the proposed impeller design will have acceptable operating characteristics under the conditions specified for the proposed installation. The test pump shall be set up and a witnessed demonstration shall be performed prior to designing, fabrication and testing any of the equipment proposed for the specific installation.

2. GENERAL PERFORMANCE CRITERIA: Pumps furnished under this section and any referencing section shall operate without loss of head due to cavitation or vibration over the entire specified range of flow and head conditions and shall be specifically

selected for NPSH margin requirements detailed in paragraph 11050-1.04.F. Pump selections which do not provide the specified margin will be rejected.

The pump selection for a given application shall be predicated on locating the specified most frequent operating condition (usually Condition Point B in the detailed specification sections, but other specified operating conditions may apply as well) in the proposed pump's Preferred Operating Region (POR), as defined in ANSI/HI 9.6.3. The Preferred Operating Region (POR) shall be not less than that specified in paragraph 6.1.12, ANSI/API 610. Condition A shall be the pump's rated condition and shall be guaranteed to meet both specified head and flow within the limit established in ANSI/HI 14.6, acceptance grade 1E. All other Condition Points indicated to be for sustained (not momentary or startup) operation specified in the detailed section referencing this Section may be located in the manufacturer's Allowable Operating Region (AOR) as depicted in published catalog information. The pump's AOR shall be as defined under ANSI/HI 9.6.3. If the pump manufacturer's information is silent on the boundaries of the AOR and POR for the proposed selection, the submittal will be rejected.

3. GENERAL DESIGN CRITERIA: All pumps furnished under sections referencing this section shall be designed in accordance with applicable portions of ANSI/HI 1.1 – 1.4, 2.1 – 2.4 and ANSI/HI 9.6.2 – 9.6.6 and the requirements of this section. The pumps shall be specifically designed to pump the fluid described in the detailed specification and shall operate without clogging or fouling caused by material in the pumped fluid at any operating condition within the range of service specified.

Unless otherwise noted or specified, pump head capacity curves shall slope in one continuous curve within the specified operating conditions. No points of reverse slope inflection capable of causing unstable operation will be permitted within the specified zone of continuous duty operation. Pumps with head/capacity curves with a reverse inflection are specifically prohibited if these characteristics will cause unstable operation within the specified range of operating conditions and where startup/shutdown conditions entail operation against a slow opening/closing valve.

Pumps furnished under this section and any referencing section shall operate without loss of head due to cavitation or vibration over the entire specified range of flow and head conditions and shall be specifically selected for NPSH margin requirements detailed in paragraph 11050-1.04.F. Pump selections which do not provide the specified margin will be rejected.

Under no circumstances will centrifugal pumps with suction specific speeds in excess of 9,000 be considered for variable speed applications. Selections for constant speed applications with suction specific speeds no greater than 9,500 will be acceptable so long as all specified operating points fall within 80 to 110 percent of the Best Efficiency Point capacity on the pump's head/capacity curve at the specified operating speed. Suction specific speed shall be calculated in accordance with ANSI/HI 1.3, paragraph 1.3.2.2. Each pump shall be subjected to a factory NPSH3 test at the pump's BEP to confirm the suction specific speed limitation has not been exceeded.

C. CRITICAL SPEEDS AND NATURAL FREQUENCIES:

1. GENERAL: The criteria of this paragraph, 11050-1.04.C., apply to all pumps. Pumps exhibiting adverse field behavior from resonance, vibration or fatigue shall be repaired or replaced at no cost to the Owner. The criteria shall apply to the equipment in like new condition as well as the as worn condition (i.e., when all parts, individually and as a composite, reach the manufacturers' maximum tolerances). Critical speed and natural frequency data submittal requirements depend upon the pump:

a. For the more critical pumps that are covered under paragraph 11050-1.05 the Contractor is required to submit analytical reports confirming requirements on critical speeds and natural frequencies prior to pump fabrication as specified in that paragraph.

b. For constant speed pumps and for variable speed pumps with suction size less than 6-inch diameter – no critical speed submittal is required.

2. LATERAL ROTOR DYNAMICS: The complete pumping unit, including all related frames, supports, enclosures, and casings, shall be free from dangerous critical speeds from 20 percent below to 30 percent above the operating speeds required to achieve the specified performance characteristics. The logarithmic decrement for each damped natural frequency (forward or backward) shall be greater than +0.3, and the amplitude magnification factor shall not exceed 3, for any natural frequency within this range.

Process sensitivities are such that operation at infinitely variable speed within the specified operational conditions is an absolute requirement. Any remedy imposing a locked-out speed interval or intervals will not be considered an acceptable remedy for identified critical speeds. Acceptable remedies include combinations of adjustments in rotor geometry or materials, and the substitution of energy absorbing couplings. Other remedies may be considered so long as they are justified in writing and the proposal sealed and signed by the design professional retained by the manufacturer to perform the system mass elastic system analyses.

3. TORSIONAL AND COMBINED SHAFT STRESS: For constant torque applications, the pump rotor shall be free from torsional response which produces combined (steady plus alternating torque induced) stresses exceeding 30 percent of the material's elastic limit (but no more than 18 percent of the material's ultimate tensile strength) at any speed from 10 percent below to 20 percent above that required by the specified operating conditions, or during startup, shutdown or motor control transients.

For variable torque applications (including variable speed pumps, vertical pumps and pumps with large overhung loads) the pump rotor and any intermediate shafting shall be free from torsional responses which, in accordance with MIL STD 167-2, produce combined (torsional steady and alternating) peak shear stresses at points of stress concentration (calculated in accordance with the requirements of this section) that exceed 4 percent of the material's ultimate tensile strength, nor more than 50 percent of the material's fatigue limit, whichever is less.

D. IMPELLER CLEARANCES, VANE PASSING FREQUENCY AND IMPELLER KEYWAYS:

The radial clearance between the tip of the impeller vane and diffuser or volute vanes shall be not less than 3 percent and 6 percent, respectively, of impeller diameter. The ratio of liquid channel widths (diffuser or volute/impeller) shall be not less than 1.15 nor more than 1.3 for diffuser pumps and 1.4 – 1.5 for volute-type pumps. The pump shall be designed so that internal geometry shall not cause uneven flow distribution at impeller vane inlets.

Impeller vane combinations shall not be an even multiple of diffuser vanes in column type pumps.

Impeller keyways for multistage column type pumps shall be cut at differing positions and equal angular spacing on the impeller shaft to avoid multiple simultaneous vane passing pulses.

E. COMPONENT DESIGN CRITERIA:

1. GENERAL: Unless otherwise specified, combined stresses in steel frames and supports shall not exceed those permitted by the AISC Manual of Practice. Combined stresses in cast, forged, rolled, or fabricated pressure retaining components, frames and supports shall not exceed that allowed for the given material in Section VIII, Division 1 of the ASME Code. Design pressures for pressure-retaining parts shall be not less than twice the pump's shutoff head at the manufacturer's listed maximum operating speed. Pump casing strain at any head on the full speed operating curve (including allowances for increases caused by specified multi-stage applications) shall not result in distortions at the bearing housings greater than the maximum allowable by the bearing manufacturer to provide the specified bearing life.

The term "combined stresses" in this section shall mean the sum of all operating stresses, including stresses induced by dynamic and static forces as developed via the analysis procedures stipulated in this section. Static forces (x, y, z, and moments in all planes) shall include the relevant maximum nozzle loads specified in ANSI/HI 9.6.2 or as stipulated by the pump manufacturer. Dynamic forces shall include both steady state and transient stresses induced by operating conditions within the zone of operation established by the specified operating conditions.

2. ANCHORAGE AND EQUIPMENT MOUNTS: The Contractor shall cause the pump manufacturer to be responsible for the design of the anchor bolting system and equipment supports for each separately mounted component furnished under the detailed specification. Anchorage and equipment support requirements for pumps shall conform to the requirements of Section 11002 and the standards of the Hydraulic Institute.

Anchor bolts and connecting bolts for all pumps and assemblies supported by other assemblies furnished under this section, or sections referencing this section, shall be designed in accordance with Section 01900. All operation and maintenance manuals for all pumps and assemblies shall contain criteria for anchor and baseplate bolt torque values.

Unless otherwise recommended by the equipment manufacturer, all pump discharge nozzles shall be restrained using the equipment connection fitting specified in Section 15085.

Equipment mounts for vertical (column and volute type) pumps weighing more than 1000 pounds, with discharge nozzles 6 inches in diameter and greater, shall employ soleplates conforming to the requirements of Section 11002. Soleplate mounting conforming to Section 11002 shall also be provided for all separately supported components in the pump drive system. Fabricated steel supports regardless of design and the nature of the structural shapes used for such proposed supports, will not be accepted.

Soleplates shall be designed to span openings for equipment connections and provide access to maintenance points. Soleplates shall be of sufficient section to key, not less than 1 inch, into the supporting grout provided for bonding the soleplate to the structure. Soleplates shall be of sufficient size to bolt the pump base to the soleplate and allow dowelling the pump base to the soleplate without encumbering the anchor bolts required for clamping the soleplate to the structure.

Equipment mounts for horizontal pumps shall be designed in accordance with Section 11002 and paragraph 7.3, ANSI/API 610 and shall provide common support for the pump and motor (and flywheel, if one is specified). Baseplate bolting shall conform to assumptions contained in ANSI/HI 9.6.2. Pump base shall be drilled and dowel pinned to the base plate in addition to bolting.

Tapered dowel pins shall be used to record the final position of all machine bases on soleplates or pump baseplates. Dowel pins shall be hardened and machine-ground conforming to the requirements of ANSI/ASME B18.8.2. Holes for tapered dowels shall conform to the requirements set forth in Appendix A of ANSI/HI B18.8.2.

3. TORSIONAL AND COMBINED SHAFT STRESSES: Shaft stresses shall be calculated using the following equation and the stress concentration factors in the table below.

$$S = S_{cf} \times \frac{G \times D \times \Delta_{\Theta}}{2 \times L}$$

where:

S	=	stress, psi
S_{cf}	=	stress concentration factor, dimensionless
D	=	minimum shaft diameter at point of concentration, inches
Δ_{Θ}	=	twist in shaft between adjacent masses, radians
L	=	effective length between masses, inches
G	=	shear modulus of shaft material, lb/in2

The S_{cf}, to be applied at all the roots of all keyways and changes in shaft diameter shall be as follows:

S_{cf}	Ratio of fillet radius to shaft diameter
4.3	0.0025
3.7	0.01
3.05	0.02
2.75	0.03
2.6	0.04
2.55	0.05 and greater

Values of S_{cf} between data points in the table above shall be based upon a straight line interpolation.

4. SHAFT DEFLECTION: Pump shafts on volute type pumps shall be designed to provide sufficient stiffness to operate without distortion or damaging vibration throughout the range of service specified. Shaft deflection at the face (impeller side) of the shaft seal shall be limited to no more than 1.5 mils at any operating condition within the zone described by the specified continuous duty operating conditions. Deflection at the shaft seal shall be calculated as required by provisions set forth in paragraph 11050-1.05.B.5.c.

5. BEARINGS: Unless otherwise specified, anti-friction bearings for pumps shall be selected for a minimum L–10 life of 50,000 hours in accordance with ABMA 9 or 11. Anti-friction bearings for Custom Engineered pumps shall have bearings selected for an L–10 life of 100,000 hours in accordance with ABMA 9 or 11. Bearings for other elements in the rotating system such as motors, intermediate shaft bearings, and flywheel bearings shall be selected using the same criteria as specified for the pump. Bearing selection shall be based upon the worst combination of continuous duty operating conditions specified and shall include both steady state and transient loads. Calculations supporting the selection of bearing sizes shall be provided as Product Data.

6. BEARING ISOLATORS: Unless otherwise specified, all pump and motor bearings shall be fitted with bearing isolators, specifically selected for the size and type bearing. Bearing isolators shall be labyrinth, non-fretting type designed to expel contaminants by centrifugal force and prevent escape of lubricants. Vapor block capability shall be provided. Bearing seals shall be Inpro/Seal or approved equal.

7. PUMP SHAFT SEALS: Unless otherwise specified in the detailed specification, pump shaft seals shall be packing as specified in Section 11000.

F. NET POSITIVE SUCTION HEAD MARGIN LIMITATIONS:

1. GENERAL: Pumps furnished under this section and sections referencing this section shall be selected for NPSH (Net Positive Suction Head) margin limitations using the criteria set forth in this section. Net Positive Suction Head Required - 3 Percent Reduction (NPSH3) characteristics for the candidate pump shall be based upon documented test data not more than five years old, performed on a pump not more than two nominal pump diameters larger or smaller than the proposed pump with an impeller of the same geometry as that

proposed for the pump to be used for the subject application, and operating at the same speed as the pump for the proposed application. The Contractor shall document the basis for pump selection based upon NPSH margin limitations as set forth in this paragraph.

The detailed specification sections provide NPSHA (Net Positive Suction Head Available) information for anticipated operating conditions for each application. This information is generally referenced to a specific elevation, stated in terms of project datum. It shall be the Contractor's responsibility to cause the pump manufacturer to adjust the NPSHA information in the specification section to the elevation of the pump impeller eye for the specific pump model and size proposed for the application. NPSH3, as used in the following paragraphs, shall mean the NPSH3 at the impeller eye, determined in accordance with ANSI/HI 11.6 or 14.6, as applicable for the proposed pump. The Contractor shall cause the pump manufacturer to document the method used to determine NPSH3 for the proposed pump and justifying compliance with the NPSH margin limitations established under this paragraph for each specified operating condition in material submitted under paragraph 11050-1.08. The documentation shall include justification of the NPSH3 tests used to develop NPSH3 characteristics, including the following:

a. Date, test procedure, and test logs of original NPSH3 information used to project requirements for pump selected for the application.

b. Test pump size, impeller diameter, impeller model, eye diameter, and speed.

c. Calculations projecting NPSH3 test information to NPSH3 curve information for the pump proposed for the application.

d. Calculations demonstrating compliance with the NPSH margin requirements established in this paragraph.

The Contractor shall submit the manufacturer's margin calculations justifying the proposed pump selection with the material required under paragraph 11050-1.08. The NPSH margin ratios specified in this paragraph shall be the minimum acceptable margin ratios. If the proposed pump requires greater margin ratios to operate within the specified operating conditions without loss of head due to cavitation, then it shall be the responsibility of the Contractor to bear all costs associated with achieving the required margin ratio by lowering the elevation of the pump setting, lowering the elevation of the structure or other means. Any such adjustments shall be subject to review and acceptance by the Construction Manager.

Individual restrictions that apply to NPSH margin shall be as set forth below, depending upon the type of pumping equipment and the fluid to be pumped.

2. CENTRIFUGAL PUMPS – WASTEWATER SERVICE: The following restrictions shall apply to pumps for wastewater and all solids bearing liquids applications including storm water.

a. Pumps classified as centrifugal pumps under ANSI/HI 1.1 – 1.2 with specific speeds less than 7000 with cast duplex stainless steel impellers and to vertical column-type sewage pumps with

cast duplex stainless steel impellers and specific speeds less than 5000, a minimum NPSHA/NPSH3 margin ratio of 1.1 shall apply to pumps at any operating condition within 85 percent and 115 percent of best efficiency capacity. The minimum acceptable NPSH margin ratio at any other location on the pump's head/capacity curve shall be 1.2.

b. Pumps with specific speeds greater than the above limitations shall have NPSH margins of 1.5 and 2 applicable to the capacity envelope limitations defined previously. Under no circumstances shall the absolute value of the margin above NPSH3 be less than 3.5 feet.

c. Pumps with specific speeds greater than the above limitations, pumps with impeller materials that do not meet the requirement for duplex cast stainless steel set forth in this section, and all pumps with suction specific speeds greater than 10,000 shall have NPSH margins not less than 2.5 at operating conditions within ±15 percent of best efficiency capacity and not less than 3.5 for all operating conditions falling outside the ±15 percent of best efficiency capacity envelope. Under no circumstances shall the absolute value of the margin for pumps qualifying with the foregoing restrictions, be less than 3.5 feet greater than NPSH3.

3. CENTRIFUGAL PUMPS - CLEAR LIQUID SERVICE:

a. The minimum NPSH margin requirements set forth in the table below shall apply to water and all non solids bearing liquid pumps classified as centrifugal pumps under ANSI/HI 1.1 – 1.2 with specific speeds less than 7000 fitted with cast duplex stainless steel or aluminum bronze impellers and to vertical column-type pumps with cast duplex stainless steel impellers or aluminum bronze impellers and specific speeds less than 4000. Under no circumstances shall the absolute value of the margin above NPSH3 be less than 3.5 feet.

Power per stage, Kw	Operating Condition Within POR	Operating Conditions Outside POR
< 75	1.1	1.2
≥ 75 but ≤ 225	1.05	1.1
>225	1.2	1.3

b. Pumps with specific speeds greater than the above limitations, pumps with impeller materials that do not meet the requirement for duplex cast stainless steel set forth in this section, and all pumps with suction specific speeds greater than 10,000 shall have NPSHA margins not less than 3.0 at operating conditions within ±15 percent of the best efficiency capacity and not less than 4.0

for all operating conditions falling outside the ±15 percent of best efficiency envelope. Under no circumstances shall the absolute value of the margin above NPSH3 be less than 3.5 feet.

G. ELECTRIC MOTORS:

1. GENERAL: Unless otherwise specified, pumps shall be electric motor driven. All motors shall be selected to be non-overloading at any operating point along the pump's full speed operating curve, including all points located beyond specified operating conditions. All vertical motors shall be solid shaft construction. Hollowshaft motors will not be accepted. Motors furnished with pumps specified for operation at variable speed shall be inverter duty types conforming to the requirements of Section 11060 and shall be compatible with the variable speed equipment furnished with the pump.

Motor bearings shall be protected with bearing isolators as specified in paragraph 11050-1.04.E.

2. MOTORS FOR CUSTOM ENGINEERED PUMPS: (NOT USED)

1.05 ADDITIONAL DESIGN REQUIREMENTS (NOT USED)

1.06 QUALITY ASSURANCE – ALL PUMPS

A. QUALITY CERTIFICATION:

All manufacturers and manufacturing sites proposed by the Contractor for supply of equipment furnished under this section and sections referencing this section shall hold current certification under ISO 9001. Application for certification under ISO 9001 shall not be deemed as an acceptable substitute for current certification. Documentation attesting to current certification shall be signed by an officer of the manufacturer's corporation and shall be notarized. The documentation shall also include the manufacturer's written Quality Assurance/Quality Confirmation (QA/QC) program and the documentation plan necessary for ISO 9001 certification.

B. UNIT RESPONSIBILITY:

The Contractor shall assign Unit Responsibility to the pump manufacturer in conformance with the requirements of Section 11000.

C. PERFORMANCE CONFIRMATION:

1. HYDROSTATIC TESTS: All pressure sustaining parts shall be subjected to factory hydrostatic tests. Hydrostatic tests shall conform to the requirements of paragraph 8.3.2 of ANSI/ ANSI/API 610. Castings shall be held at the test pressure for 30 minutes for all pumps with discharge nozzles 14 inches in diameter and less and for 60 minutes for pumps with discharge nozzles 16 inches in diameter and greater. Test results shall be certified correct by an officer of the pump manufacturer's corporation, and shall be notarized.

2. PERFORMANCE GUARANTEE: Unless specified otherwise in the detailed specification, pump performance (flow and head, efficiency and NPSH3) shall be guaranteed by the pump manufacturer to the criteria specified under this paragraph.

Equipment performance documentation, including test data, where tests are specified, shall include sufficient test points (not less than 8) to document hydraulic performance along the complete head/capacity curve from shutoff to maximum capacity and shall cover all full speed operating points specified in the detailed specification section referencing this Section. Tests conducted at specified operating conditions shall be the inlet throttled to product the NPSHA indicated for that specific condition in the detailed specification. NPSH3 tests shall be performed for not less than four full speed operating conditions, but not less than all specified operating conditions and at Best Efficiency.

Test procedures shall conform to those set forth in ANSI/HI 14.6 acceptance grade 1E, and as specifically detailed in these specifications. Performance tests shall be conducted at the specified maximum speed. Affinity relationship-predicted test results will not be accepted. For column type pumps, performance documentation shall include curves showing both bowl efficiency and overall efficiency (including inlet, bowl, column and discharge head losses) at maximum operating speed for the application.

Acceptance criteria for head and capacity test results, based upon the rated condition specified in the detailed specification shall be as required in ANSI/HI 11.6 and 14.6, acceptance grade 1E.

Acceptance criteria for NPSH3 at any specified operating condition shall be the values proposed by the Contractor in the submittal curves submitted under paragraph 11050-1.08 and duly accepted by the Construction Manager, with a tolerance of plus 0, minus unlimited, with the exception that suction specific speed, as calculated for the specific pump, shall not exceed the limitation established under paragraph 11050-1.04.B.

The guarantee shall include a statement to the effect that the pump will operate within the operating regions specified in the detailed specification. The guarantee shall be in writing, shall be signed by an officer of the manufacturing corporation, and shall be notarized. Under no circumstances shall deviations from specified operating conditions result in overload of the driver furnished with the equipment, nor shall such deviations result in power requirements greater than the driver’s nameplate (1.0 service factor) rating.

3. NON-WITNESSED TESTS: Unless specified otherwise, all pumps shall be performance tested in accordance with ANSI/HI 14.6, Acceptance Grade 1E. The factory tests shall include test data for each full speed performance requirement (Condition Points A and B specified in the detailed specification) and any other points stipulated for this test procedure in the detailed specification. These tests shall be conducted with the pump inlet throttled to provide the specified NPSHA. For large column pumps, model performance testing with reduced NPSHA, pursuant to paragraph 11050-1.07.B.2, may be used. If specified in the detailed specification, test data at the full speed operating conditions shall include shaft vibration and case noise.

The test setup in the manufacturer's test facility shall duplicate as closely as possible the inlet conditions in the proposed installation, using temporary baffles and other means. Where

centrifugal pumps are furnished with inlet elbows, inlet adapters or inlet reducers, the pumps shall be tested with the elbow, adapter or reducer fitted to the pump and specified performance criteria shall apply to the complete pump assembly, including losses through any elbow, adapter or reducer. Where submersible pumps are to be furnished with inlet nozzles and/or discharge elbows or adapters, the pumps shall be tested with these components fitted to the pumps. The specified performance requirements shall apply to the complete pumping assembly including any inlet nozzles, and discharge elbows or adapters. Certified test data shall include separate readings for inlet and discharge head for each data point.

Not less than eight test points shall be taken, including not less than three within ± eight percent (in terms of rated flow) of the rated condition (Condition Point A) and not less than two test points within ±4 percent of the pump's best efficiency point at the test speed. In addition, one test point shall be sufficient to define head and power requirements at shutoff head.

NPSH3 tests shall be performed to confirm the data used to establish NPSHA margin for each specified operating condition as specified in paragraph 11050-1.04.F. NPSH3 tests for column type (axial and mixed flow and vertical turbine) pumps shall be performed using the method described for Figure 2.74 or Figure 2.75 in ANSI/HI 2.6. NPSH3 tests for submersible wastewater pumps shall be performed using the method described in Figure 11.6.8 in ANSI/HI 11.6. All NPSH3 tests shall extend from 30 percent to 140 percent of Best Efficiency Flow at full speed, or to not less than 10 percent (in terms of flow) past the flow at Operating Condition B, whichever is greater. Failure to achieve specified performance or performance proposed in accepted submittal documents (capacity and head, efficiency or NPSH3), whichever is more restrictive, shall be cause for rejection. Acceptance tolerances shall be as set forth in paragraph 11050-1.06.C.2.

All test procedures shall be in strict conformance with the referenced standards, except prediction of performance of a trimmed impeller from test data of the larger impeller will not be permitted. If trimming is required, the pump shall be retested. Under no circumstances shall deviations from specified operating conditions, though allowed by the referenced standards, result in overload of the driver furnished with the equipment, nor shall such deviations result in power requirements greater than the driver's nameplate (1.0 service factor) rating.

The Contractor shall furnish the Construction Manager with not less than two weeks' advance written notice of the date and place of the non-witnessed tests.

All test results, including test logs and generated curves, shall be certified correct by an officer of the pump manufacturer's corporation and shall be notarized. Contractor shall submit test results as Product Data.

1.07 QUALITY ASSURANCE – ADDITIONAL REQUIREMENTS (NOT USED)

1.08 SUBMITTALS

In addition to the material listed in the detailed specification, the following submittals shall be provided in accordance with Section 01300:

1. Documentation of successful pump designs as specified under paragraph 11050-1.04.B.1. If included as part of the design, the documentation shall

include applications where pump cans of a similar size have been provided as part of the design.

2. Certificate of Unit Responsibility attesting that the Contractor has assigned unit responsibility in accordance with the requirements of this section and paragraph 11000-1.02.C. No other submittal material will be reviewed until the certificate has been received and found to be in conformance with these requirements.

3. A copy of this specification section and the referencing section and all other applicable specification sections governing the pump, drive and driver, supports and specified appurtenances. The specification copies shall be complete with addendum updates included, with each paragraph check-marked to indicate specification compliance or marked to indicate requested deviations from specification requirements. Check-marks shall denote full compliance with a paragraph as a whole. If deviations from the specifications are indicated and, therefore requested by the Contractor, each deviation shall be underlined and denoted by a number in the margin to the right of the identified paragraph. The remaining portions of the paragraph not underlined will signify compliance on the part of the Contractor with the specifications. The submittal shall be accompanied by a detailed, written justification for each deviation. Failure to include a copy of the marked-up specification sections, along with justification(s) for any requested deviations to the specification requirements, with the submittal shall be sufficient cause for rejection of the entire submittal with no further consideration.

4. A copy of the contract document control diagrams and process and instrumentation diagrams relating to the submitted equipment, with addendum updates that apply to the equipment in this section, marked to show specific changes necessary for the equipment proposed in the submittal. If no changes are required, the drawing or drawings shall be marked "no changes required". Failure to include copies of the relevant drawings with the submittal shall be cause for rejection of the entire submittal with no further review.

5. Documentation of certification in accordance with ISO 9001 as specified under paragraph 11050-1.06.A.

6. Predicted pump performance curves for each condition point specified showing head, power, efficiency, and NPSH required on the ordinate plotted against capacity (in mgd) on the abscissa. Curves for variable speed pumps shall be provided to demonstrate operation at all speeds required to achieve the specified reduced speed operating conditions. All curves shall clearly display the specified operating conditions and the manufacturer’s limits for the POR and AOR, as specified in paragraph 11050-1.04.B. Curves for column type pumps shall show bowl efficiency and allowances for inlet, column and discharge head losses separately.

7. NPSH margin calculations performed for each specified operating condition in accordance with paragraph 11050-1.04.F.2 or .3 as applicable and including the information required under paragraph 11050-1.04.F.1.

8. Motor submittal information as specified in Section 11060. In addition, this information shall include certified calculations for motor rotor and frame reed frequencies, as specified under paragraph 11050-1.04.G.

9. Complete description and sketch of proposed test setup for factory test if a factory test has been required under the detailed specification section. Submittal material shall include sample calculations and proposed test log format. If the Contractor proposes a model test for a part or all of the specified performance tests, the submittal information shall include the proposed model details and a complete description of the proposed method for comparing the model impeller profiles with the impeller profiles for the prototype pumps.

10. Drawings showing general dimensions and confirming the size of pumps, motors, drives and specified appurtenances; piping connections; construction details of equipment (including bearings and bearing isolators); wiring diagrams; and weight of equipment.

11. Variable-speed drive information as required under Section 11069 if the equipment specified includes variable speed capability.

12. Driver unit support calculations and data if the driver is separately supported and if the analysis under the requirements of paragraph 11050-1.05.B. has been required by the terms of these specifications.

13. Shaft deflection calculations for volute type pumps: provide calculations to demonstrate compliance with paragraph 11050-1.04.E, per the methodology set forth as required by Section 11050-1.05.B.5.c.

14. Detail drawings of the pump and driver unit foundation demonstrating conformance to this Section and Section 11002. Submittal shall include drawings depicting type, size, number, projection, and arrangement of anchor bolts, dimensional drawings of the sole and baseplates, dimensional drawings for the concrete supports for both the pump and motor, if applicable. Drawings shall also depict all other pertinent information, including: location of equipment pads and reinforcement; equipment drains; expansion joint locations; elevation of top of grout and grout thickness; elevation of top of baseplate; soleplate; or mounting block; size and location of electrical conduits; and any other equipment mounting features embedded in equipment pads.

15. Limiting nozzle loading criteria, if different from that established by ANSI/HI 9.6.2.

16. The qualifications of the independent testing laboratory and individual personnel proposed by the Contractor to perform field vibration testing, analysis and reporting in accordance with the requirements of paragraph 11050-3.06.

17. The qualifications of the personnel proposed by the Contractor to perform field alignment procedures in accordance with the requirements of paragraph 11050-3.04.

PART 2--PRODUCTS

2.01 MATERIALS

A. GENERAL:

Where this section and sections referencing this section are silent with respect to materials of construction on any component, material selection shall follow the requirements of Table H.1, ANSI/API 610, Materials Class I-1, with the exception that all shafts for vertical column type pumps shall be 12 percent chromium stainless steel. Materials specified are considered the minimum acceptable for the purposes of durability, strength, and resistance to erosion and corrosion. The Contractor may propose alternative materials for the purpose of providing greater strength or to meet required stress limitations. However, alternative materials must provide at least the same qualities as those specified for the purpose.

B. PUMPS:

1. FINISH FOR SURFACES IN CONTACT WITH PUMPED FLUID: All pump components in contact with the pumped fluid shall conform to the following requirements.

Surfaces to be machine-finished shall be indicated on the shop drawings by symbols which conform to ANSI B46.1, Surface Texture, Surface Roughness, Waviness and Lay. Machine surfaces shall be finished to at least the following tolerances (SI units):

Nominal Roughness:

Surface	Grade, Ref: ANSI B46.1 (SI units)
General Machine Work	3.2 or better
Flange Faces	3.2
Journal Surfaces at Sleeve Bearings	0.4
Hydraulic Surfaces	
Impeller	4.5 or better
Impeller Bowl and Diffuser	3.2 or better
All other wetted surfaces	6.3 or better

Flaws such as scratches, ridges, holes, peaks, cracks or checks which will make the part unsuitable will be cause for rejection. Machine finished surfaces shall be thoroughly cleaned and coated with protective layer of rust preventive. Small pieces, unassembled pipe or finished bolts, shall be oiled and wrapped with moisture resistant paper.

2. MATERIALS: Unless otherwise specified, wetted cast iron parts for pumps for solids bearing liquid services shall have 2 to 3 percent nickel added to the cast iron.

Stainless steel impellers shall be provided for the first stage of all custom engineered pumps, pumps intended for pumping screened or unscreened wastewater and elsewhere when specified. Stainless steel impellers shall be cast duplex stainless steel conforming to ASTM A995, Grades 2A, 3A, or 6A, with Charpy impact energies greater than 40 ft-lbs at -40°C per ASTM A923 method B. Where cast nickel aluminum bronze (C95800) impellers are specified, the materials shall conform to ASTM B148. Unless otherwise specified, second and successive stage impellers on multistage column pumps may be porcelain coated cast iron or bronze.

Materials for all shaft sleeves for packed boxes, fretting seals and interstage seals shall conform to ANSI/API 610, Annex H; 12 percent chromium hardened; or hard-faced 316 austenitic stainless steel. Materials for seal glands for packed boxes and shaft sleeves shall be AISI 316 stainless steel. Fastener parts of all types in wetted areas shall conform to ANSI/API 610, Materials Class S-5 requirements. Regardless of the seal construction, all seal chambers shall be adequately sized to accommodate specified mechanical seals.

C. FLYWHEELS (NOT USED)

2.02 GENERAL QUALITY

Details of manufacture and assembly of equipment furnished under this section and referencing sections shall follow the requirements of ANSI/API 610 with respect to the following features (paragraph references, ANSI/API 610):

1. Alignment aids (paragraph 6.1.24).
2. Removal of rotating element (paragraph 6.1.25).
3. Jackscrews for assistance in alignment on all baseplates and equipment supports (paragraph 9.3.8.3.2).
4. Castings (paragraph 6.12.2).

All components or subassemblies weighing 50 pounds or more shall have at least one lifting eye or a provision for threading in a lifting eye. Components 250 pounds or greater shall have lifting eyes or provisions for at least two lifting eyes. Components 1000 pounds or greater shall have at lest 3 lifting eyes or provisions for inserting lifting eyes.

2.03 BASEPLATES AND SOLE PLATES

Unless otherwise noted in the detailed specification, all pumps shall be furnished by the pump manufacturer with baseplates or soleplates conforming to the requirements of Section

11002. Baseplates and sole plates shall be designed to be installed in the housekeeping curb shown and shall be machined flat and co-planar to within 0.002 inch per foot in all directions on the face mating with the pump and motor or driver support. Sole plates shall have the words "THIS SIDE DOWN" permanently affixed to the underside using welding rod material prior to milling. Alternative marking methods, using heavy scribing or machining, are acceptable provided that they may be observed following blasting in preparation for coating.

2.04 WEARING RINGS

Where specified, pumps shall be fitted with both stationary and rotating wearing rings. Except for the difference in hardness between stationary and rotating rings, wearing rings shall be of stainless steel and shall conform to the requirements of ANSI/API 610, paragraph 6.7 and material class S-8 (Table H.1, Annex H). Maximum wearing ring clearances shall not exceed 150 percent of the values stated in Table 6, ANSI/API 610. Minimum wearing ring hardness on the rotating ring shall be 350 Brinnel Hardness Number (BHN), with the stationary ring not less than 100 hardness points greater.

L-form wearing rings are not acceptable for wastewater, sewage, stormwater, thickener overflow, mixed sludge, digester circulation, digested sludge, waste activated sludge, return activated sludge or primary effluent pumping service.

2.05 BALANCE

Balancing for pumps with suction nozzle sizes 6 inches in diameter and greater and all associated components shall conform to the requirements set forth in ANSI/API 610, paragraph 6.9.4.1 (equivalent to ISO 1940 or ANSI 2.19 Grade 2.5), unless other portions of this project manual impose more restrictive requirements. It is the intent that the components be balanced as an assembly ("rotor") in accordance with ANSI/API 610 definitions. For extended shaft pumps, balance impeller(s) and shaft up to the first coupling with the line-shaft.

For separately balanced components, perform a residual unbalance inspection after rotor assembly per ANSI/API 610 requirements, as described in Annex J of that document. Provide copies of worksheets and demonstrate that tolerances are in compliance (i.e. rotor has passed) in addition to other reporting requirements of this paragraph.

All balance logs, certified correct and signed by an officer of the manufacturing corporation and notarized, shall be furnished as Product Data in accordance with paragraph 11050-2.09.

2.06 DRIVE UNIT SUPPORTS FOR SEPARATELY SUPPORTED MACHINES AND INTERMEDIATE SHAFT SUPPORTS

Supports for separately mounted vertical pump drivers and intermediate shaft bearings shall be composite structures of fabricated steel, ASTM A36. Unless otherwise specified, the supports shall be designed to span an opening in the floor sufficient to allow removal for the complete pump. Rolled steel beams shall be provided to stiffen the support and a fabricated steel driver unit support pedestal shall be mounted on the support plate. The support pedestal top plate and all portions of the support plate assembly intended to join with surfaces in the installation structure shall be milled flat and parallel to 0.002 inches per foot. Pedestals shall be

provided with access provisions to adjust or assemble/disassemble couplings. The support shall be designed to be supported on a sole plate or sole plates embedded in a house keeping pad at the edges of the floor opening or as indicated. Other details for the driver unit support shall be as indicated.

2.07 FLYWHEEL ASSEMBLIES (NOT USED)

2.08 INLET WELLS FOR COLUMN TYPE PUMPS (NOT USED)

2.09 MACHINING

All machined surfaces shall have a 90 micro inch Ra finish without any grooves, surface imperfections or machining marks of any sort. Mating surfaces shall be coplanar within a maximum of 0.001 inches. Surfaces that are in contact with a gasket such as flanges and casing joints shall have the customary concentric grooves pattern to increase leak path. Bearing housings and seals shall all have collinear centerlines within less than 0.001 inch total difference. Shafts shall have a 64 micro inch Ra finish.

2.10 PRODUCT DATA

The following information shall be provided in accordance with Section 01300.

1. Performance guarantee as specified in paragraph 11050-1.06.C.

2. Equipment anchor calculations specified in paragraph 11050-1.04 E.2.

3. Operation and maintenance information specified in Section 01730.

4. Motor Product Data as specified in Section 11060.

5. Bearing L-10 life calculations.

6. Critical speed calculations demonstrating compliance with paragraph 11050-1.05.B shall be provided if a lateral rotordynamic analysis is required. Otherwise, critical speed calculations demonstrating compliance with paragraph 11050-1.04.C shall be provided.

7. Nozzle loading information required under paragraph 11050-3.01.

8. Motor balance logs, certified and notarized as specified in paragraph 11050-1.04.G.3.

9. Certified balance logs and worksheets, as specified in paragraph 11050-2.05.

10. Installation Certification Form 11000-A as specified in paragraph 11050-3.01.

11. Training Certification Form 11000-B as specified in paragraph 11050-3.08.

12. If factory tests are specified in the detail specification section, certification of satisfactory testing of each unit as specified. The certified material shall include copies of test logs and resulting performance curves.

13. Documentation of field alignment data in accordance with Section 11005.

PART 3--EXECUTION

3.01 GENERAL

With the exception of submersible pumps and the inlet connection for column type pumps installed in open forebays or wet wells, all pump inlet and discharge nozzles shall be connected to field piping using equipment connection fittings conforming to the requirements of Section 15085. Restraining rods on equipment connection fittings shall be designed specifically to restrain the unbalanced hydraulic thrust developed by the pump when operating at full speed against a closed valve. All restraining rod nuts shall be torqued to assure that any moment or shear transmitted to the pump nozzles is within the values permitted under ANSI/HI 9.6.2 or that permitted by the equipment manufacturer, whichever is greatest. Where ANSI/HI 9.6.2 is silent with respect to any particular aspect of allowable nozzle loads, the Contractor shall follow the written requirements provided by the equipment manufacturer. All pumps furnished under specification sections containing the words ‘Custom Engineered’ in the title shall be installed under the presence of a factory authorized installation specialist or specialists. Under no circumstances shall any installation procedures take place without the installation specialists present. Equipment installation procedures shall conform to the requirements of Section 11002. Upon completion of installation work, the Contractor shall submit a complete, properly signed certification Form 11000-A as specified in Section 01999.

3.02 SOLE PLATES

Sole plates, if provided as required by this section, or any section referencing this section, or where required by the equipment manufacturer’s recommendation, shall be leveled in the presence of a factory authorized installation specialist to a maximum tolerance of 0.002 inches/foot in all directions. Where the equipment manufacturer requires more stringent tolerances, those tolerances shall prevail.

3.03 PUMP INLET WELLS (NOT USED)

3.04 ALIGNMENT

Journeymen millwrights shall perform alignment of equipment furnished under this section and any referencing section. Carpenters, laborers or any other trades are specifically excluded from performing this work. In locations where such trades are not available, the Contractor shall retain the services of a firm specializing in this type of work to perform the setting and alignment work. The Contractor shall submit the qualifications of the proposed firm to the Construction Manager for acceptance prior to performing the work. The Construction

Manager shall personally witness final alignment procedures for each item of equipment as a condition precedent to beginning any work required under Section 01660. Alignment techniques shall conform to the requirements of Section 11005.

3.05 FIELD TESTING

Field testing shall conform to the requirements of Section 01660. For all pumps furnished under specification sections containing the words 'Custom Engineered' in the title , the testing procedure shall be a plan developed jointly by the Contractor and the equipment manufacturer to demonstrate performance of each item of equipment at all specified operating conditions.

Field testing may include vibration and torsional vibration testing, as applicable.

3.06 FIELD VIBRATION

Vibration shall be measured in accordance with ISO 10816 for all pumps furnished under specification sections containing the words 'Custom Engineered' in the title . An independent testing laboratory specializing in this work, retained by the Contractor but acceptable to the Construction Manager, shall perform the measurements and shall submit the results directly to the Construction Manager.

The independent laboratory shall provide the services of a vibration specialist to supervise all data collection work, analysis and reporting, and who shall hold a current certificate as an ISO qualified - Level IV Vibration Analyst as recognized by the Vibration Institute. Data collection and analysis shall be conducted by the vibration specialist or may be conducted by an individual holding a current ISO Level III Vibration Analyst certificate with vibration specialist oversight.

The independent testing laboratory shall be fully equipped to provide continuous velocity and displacement values for all rotating equipment installed under the requirements of this section. Vibration testing equipment shall include sufficient calibrated pressure and flow monitoring devices to determine pump operating conditions as well as vibration levels. RMS vibration velocity on any component when the pump is operating at any specified continuous duty operating condition shall not exceed the limits established for the appropriate machine by Tables 8 and 9 in ANSI/API 610 when the pump is operating within the manufacturer's listed POR. Field vibration for custom engineered column type vertical pumps and motors shall not exceed 2.5 mils peak to peak RMS when the pump is operated at any capacity condition within 85 percent and 115 percent of the pump's capacity at full speed, when measured at the top of the pump motor. When operating at any combination of conditions outside the POR for any pump, regardless of type, limiting values shall be 25 percent greater than the above limits.

Vibration test reports shall be submitted as Product Data, directly to the Construction Manager, and shall bear the signature of the responsible vibration specialist. Vibration spectra shall be of sufficient resolution for legibility of magnitude and frequency data to be properly reviewed by the Construction Manager. Cascade diagrams are not sufficient for variable speed drive application unless supported by the required data in a format suitable for more detailed analyses. Separate spectra shall be provided at the maximum and minimum operating speeds and any potential resonant frequencies.

3.07 FIELD TORSIONAL VIBRATION TESTING

Where required by these specifications, field torsional vibration tests shall be performed under the direct supervision of the design professional responsible for the mass elastic system design on a pumping unit selected by the Construction Manager.

3.08 TRAINING

Training shall conform to the requirements of Section 01664 and shall include separate training sessions for each operator shift maintained by the Owner and a separate session for maintenance personnel. Unless otherwise specified in the referencing section, the training requirement is waived for constant speed pumping equipment with suction nozzle sizes 6 inches in diameter and smaller and for all pumps with connected power requirements 10 horsepower and less. The training session for maintenance personnel shall include a comprehensive presentation, employing cut-away models or comparable graphics, and documentation on the step-by-step disassembly and subsequent reassembly of a pumping unit. Upon completion of all training requirements, the Contractor shall submit certified Form 11000-B as specified in Section 01999.

END OF SECTION

SECTION 11060

ELECTRIC MOTORS

PART 1--GENERAL

1.01 DESCRIPTION

This section specifies single and three phase, horizontal and vertical, single-speed and two-speed, low-voltage (600 volts and less), energy efficient (900 rpm) and premium efficiency (1200, 1800, and 3600 rpm) alternating current, induction motors, 250 horsepower or less. Standard NEMA MG 1 motors are specified, as modified herein.

This section also specifies IEEE 841 severe-duty, totally enclosed fan-cooled (TEFC Type-2, specified herein) squirrel cage induction motors from 1 to 500 horsepower with voltage ratings of 230V, 460V, 2300V, and 4000V. See Custom Motor criteria within the driven equipment specification for voltages above 600V and for high horsepower.

Motors shall be provided in compliance with these specifications. Ambient conditions for the Project are specified in Section 01800. Provide motors suitable for continuous operation under the ambient conditions:

1. Temperature: -25 degrees C to +40 degrees C.

2. Altitude: 0 to 3,300 feet above sea level.

3. Derate motors for higher ambient temperature and for higher altitude with motor size based on brake-horsepower.

431.

432. Motors shall have aluminum rotor material and copper stator windings with F-insulation without exceeding the B-temperature rise of 80 degrees C at rated load and with Design-B torque / current characteristics rated for continuous operation duty.

Two-speed motors shall be two-winding motors. Two-speed, one-winding consequential-pole motors that require special motor starters are prohibited.

Refer to Motor Types-1, 2, and 3 Classification and Inverter Duty variable torque and constant torque specification requirements herein. Motor Types-1, 2, and 3 have the additional requirements of Inverter Duty Motors as specified or scheduled.

Enclosures, as specified elsewhere in the Project Contract Documents:

A. Type-1 - Open Drip Proof (ODP)
B. Type-2 – Totally Enclosed Fan Cooled (TEFC)
C. Type-3 – Explosion Proof (EP)
D. Custom Motors:
   1. Weather Proof-I (WP-I)

2. Weather Proof-II (WP-II)
3. Totally Enclosed Blower-Over (TEBC) for additional cooling

E. Special Purpose Motors: Per driven equipment manufacturer.

Custom Motors and Special Purpose Motors, with features or ratings that are not specified herein, are specified in the particular equipment specifications. The submittal, installation, and testing requirements for all motors are specified herein.

Custom motors are motors over 250 horsepower, medium voltage (2300 volt, 4000 volt, or higher) for high elevations, high ambient conditions, high thrust, special enclosures, intermittent duty, varying duty, and inverter duty motors that require special cooling for slow speed operation with constant torque loads and motor limited to below base speed operation.

Special purpose motors are submersible motors, integral gear motors, close-coupled pump motors, crane and hoist motors, fire pump motors, brake motors, gate and valve operator motors, and high torque rated motors and other unique application motors that specified with the driven equipment.

Submersible motors used as inverter duty motors shall meet the motor insulation, slow speed cooling, and synthetic output sine wave mitigation requirements of this specification and the driven equipment specification. Submersible motor designs and applications shall comply with NEMA MG 1-30 and NEMA MG 1-31.

Standard, custom, and special purpose motors shall be provided by the manufacturer of the driven equipment under the provisions of Section 11000 Requirements for Equipment Unit Responsibility. The Contractor shall assign unit responsibility as specified in paragraph 11000-1.02C to the manufacturer for the equipment specified and a certificate of unit responsibility shall be provided.

1.02 QUALITY ASSURANCE

A. GENERAL:

Motors shall be built in accordance with UL 674, UL 1004, and NEMA Standard MG 1. Motor nominal and minimal efficiency shall be based on NEMA MG 1, Table 12-10.

Motors shall comply with Energy Policy Act of 1992 (EPAct) with full-load efficiency measurements per IEEE Standard 112, Test Method B, and shall comply with the requirements specified.

IEC Metric Motors and imported EPAct Motors that do not meet the NEMA standards are prohibited.

B. REFERENCES:

This section contains references to the following documents. They are a part of this section as specified and modified. Where a referenced document contains references to other standards, those documents are included as references under this section as if referenced directly. In the

event of conflict between the requirements of this section and those of the listed documents, the requirements of this section shall prevail.

Unless otherwise specified, references to documents shall mean the documents in effect at the time of Advertisement for Bids or Invitation to Bid (or on the effective date of the Agreement if there were no Bids).

If referenced documents have been discontinued by the issuing organization, references to those documents shall mean the replacement documents issued or otherwise identified by that organization or, if there are no replacement documents, the last version of the document before it was discontinued.

Where document dates are given in the following listing, references to those documents shall mean the specific document version associated with that date, regardless of whether the document has been superseded by a version with a later date, discontinued or replaced.

Reference	Title
ABMA 9	Load Ratings and Fatigue Life for Ball Bearings
ABMA 11	Load Ratings and Fatigue Life for Roller Bearings
IEEE 112	Standard Test Procedures for Polyphase Induction Motors and Generators
IEEE 841	Standard for Petroleum and Chemical Industry-Severe Duty Totally Enclosed Fan-Cooled (TEFC) Squirrel Cage Induction Motors - Up to and Including 500 HP
NEMA ICS 2	Industrial Control and Systems Controllers, Contactors and Overload Relays Rated Not More Than 2000 Volts AC or 750 Volts DC
NEMA 250	Enclosures for Electrical Equipment (1000 volts maximum)
NEMA MG 1	Motors and Generators
NEMA MG1-30	Application Considerations for Constant Speed Motors Used on a Sinusoidal Bus with Harmonic Content and General Purpose Motors Used with Adjustable-Voltage or Adjustable- Frequency Controls or Both.
	Note: Specifications for Standard TENV Submersible Motors rated 1/2 – 200 HP, 140TY-L360TY Frames, and rated at 200, 230, 460, 575, 600 Volt are available from motor manufactures.
NEMA MG1-31	Definite-Purpose Inverter-Fed Polyphase Motors: Rated 5000 horsepower or less at 7200 volt or less, intended for use with adjustable-voltage and adjustable frequency controls, commonly referred to as inverters.
UL 674	Electric Motors and Generators for Use in Division 1 Hazardous (Classified) Locations
UL 1004	Electric Motors

C. FACTORY TESTS:

The manufacturer's factory motor Prototype Tests per IEEE Standard 112 Appendix-A on motors through 250 horsepower shall be submitted as Product Data for the motor. Actual factory tests for these motors are not required. The standard routine factory tests shall be conducted, that may include:

1. Winding resistance in ohms and converted to 25 degrees C.
2. Resistive Unbalance and Quarter Voltage Impedance, as applicable.
3. Locked-Rotor current (Single phase).
4. High Potential.
5. No-Load Excitation (volts, amperes, RPM).
6. Bearing vibration check.
7. Efficiency, Power Factor, Current at 115%, 100%, 75%, 50%, and no load.

The motors larger than 250 horsepower shall be subject to the manufacture's complete factory dynamometer tests per IEEE Standard 112 Appendix-B:

1. Standard routine factory tests.
2. Temperature Rise at full load.
3. Breakdown Torque.
4. Rated Full Load Slip.
5. Speed-Torque Curves.

D. WARRANTY:

Unless otherwise specified, all motors ½ horsepower and greater shall be warranted against defects in materials and workmanship for a period of 1.5 years.

All motors specified to conform to IEEE 841 shall be warranted against defects in materials and workmanship for a period of five years.

All warranties shall be submitted in writing and shall include as a minimum 100 percent full payment coverage for parts and labor for repair or replacement of the motor during the entire warranty period due to defective workmanship or materials.

1.03 SUBMITTALS

Submittals shall be provided in accordance with Section 01300 and shall include the following:

1. A copy of this specification section, with addendum updates included, and all referenced and applicable sections, with addendum updates included, with each paragraph check-marked to indicate specification compliance or marked to indicate requested deviations from specification requirements. Check marks shall denote full compliance with a paragraph as a whole.

If deviations from the specifications are indicated, and therefore requested by the Contractor, each deviation shall be underlined and denoted by a number in the margin to the right of the identified paragraph, referenced to a detailed written explanation of the reasons for requesting the deviation.

The Engineer shall be the final authority for determining acceptability of requested deviations. The remaining portions of the paragraph not underlined will signify compliance on the part of the Contractor with the specifications.

Failure to include a copy of the marked-up specification sections, along with justification(s) for any requested deviations to the specification requirements, with the submittal shall be sufficient cause for rejection of the entire submittal with no further consideration.

2. Motor Data Sheets:

   a. For all motors other than those specified to conform to IEEE 841, supplier completed “Form 11060-A” in specification Section 01999 with required factory data.

   b. For all motors specified to conform to IEEE 841, manufacturer completed IEEE Standard 841 Data Sheet for AC Squirrel Cage Induction Motors

3. Speed-Torque curve per 1.02 C Factory Tests.

4. Factory test data for motors required to be subject to manufacturer’s complete factory dynamometer tests as specified in paragraph 11060-1.02 C.

5. Guaranteed vibration level when measured per MG 1, Figure 7-6:

   a. Displacement: 0.0025 inch peak-to-peak
   b. Velocity: 0.15 inches per second peak
   c. Acceleration: 1g (gravity) peak.

6. Motor heating curve for motors per 1.02 C Factory Tests.

7. Motor outline, dimensions, and weight.

8. Manufacturer's descriptive information relative to motor features.

9. Response curve where a winding over-temperature device is required.

10. For all inverter duty motors: Manufacturer's certification that the motor is compatible with the adjustable frequency drive to be used.

1.04 POWER SUPPLY VARIATIONS

Motors shall operate successfully under running conditions at rated load with +/- 10-percent of rated voltage with rated frequency or +/- 5-percent of rated frequency with rated voltage.

1.05 NEMA WINDING TEMPERATURES

NEMA MG 1 Table 12-7 motors insulation system maximum winding temperatures in degrees Centigrade (C), with the degrees Fahrenheit (F) insulation system class specified herein.

1. Forty degrees C ambient (104 degrees F) is the basis for temperature rise.

2. For 50 degrees C ambient (122 degrees F) and above, refer to the driven equipment specifications for additional requirements.

Insulation System Class	Degrees C / F	Temperature Rise by Resistance
A	140 / 284	NA
B	165 / 329	B-rise: 40 + 80 = 120 degrees C / 248 F
F	190 / 374	F-rise: 40 + 105 = 145 degrees C / 293 F
H	215 / 419	H-rise: 40 + 125 = 165 degrees C / 329 F

1.06 NEMA MOTOR TEMPERATURE PROTECTION TYPES

Refer to Thermal Protection in Part-2 for thermal device requirements. The NEMA design shall limit the temperatures of the windings without using a thermal device:

A. NEMA Type-1: Winding Running and Locked Rotor Over-temperature Protection.

B. NEMA Type-2: Winding Running Over-temperature Protection.

PART 2--PRODUCTS

2.01 MANUFACTURERS

The following manufacturer's motors generally meet the class and performance requirements of this specification when furnished with appropriate modifications and additional features as specified:

A. HORIZONTAL MOTORS:

1. Type 1 - Premium efficiency guarded, open-drip-proof motors manufactured by:

a. Baldor-Reliance:

1) Type ODP
2) Type XEX

b. Emerson US Motor: Type DE or RE

c. General Electric Inc.: Type KS

2. Type 2 - Premium efficiency totally enclosed-fan cooled, Chemical Industry severe duty motors manufactured by:

a. Baldor-Reliance Electric Co.:
1) Type IEEE 841 XL Severe Duty
2) Super-E Severe Duty TEFC IEEE 841
3) Super-E TEFC for HVAC applications over 2 horsepower

b. Emerson US Motors: Type CE IEEE 841

c. General Electric X$D Ultra 841;
1) TEFC IEEE 841 Severe duty
2) Inverter rated

d. Siemens TEFC, Severe Duty
1) 1 to 400 hp
2) SD100-IEEE 841: 1-20 hp in Frames 143T – 256T
3) RGZEESDX: 25-400 hp in Frames 284T to 449T

e. WEG Electric Corp:
1) TEFC IEEE 841 NEMA Premium Efficiency
2) Motors Severe /Chemical Duty
3) 1 hp NEMA Frame 143T to 500 hp NEMA Frame 586/7

3. Type 3 - Premium efficiency explosion-proof motors manufactured by:

a. Baldor-Reliance:
1) XEX-XP, IP 54 with Temperature Code: T3C
2) Super-E Explosion Proof with Temperature Code: T3C

b. Emerson US Motor: Type LCE

c. General Electric: Type KS - Explosion Proof.

d. Siemens: RGZZESDI with Temperature Code: T3C

B. VERTICAL MOTORS:

1. Types 1 and Type 2 - Premium efficiency ODP and TEFC motors manufactured by:

a. Baldor-Reliance:
   1) Super-E Severe Duty IEEE 841
   2) Super-E TEFC for HVAC applications over 2 horsepower

b. Emerson US Motors:
   1) Type TUCE Corroduty
   2) Titan Line

c. General Electric:
   1) Type KS
   2) Value Line WP-1 deep well, hollow-shaft, high-thrust, high-efficiency, inverter duty 4:1 turndown, speeds: 3600, 1800, 1200 rpm, 5-300 horsepower

d. Siemens:
   1) RGZVESD: solid shaft, TEFC, severe duty, normal thrust, P-Base: 1-250 hp
   2) RGZVILESD: solid shaft, TEFC, severe duty, in-line thrust, P-Base: 1-250 hp

2. Type 3 - Premium efficiency explosion-proof motors manufactured by:

a. Baldor-Reliance: Super-E Explosion Proof

b. Emerson US Motors: Type LUCE

c. General Electric: Type KS, Class I, Group D

d. Siemens:
   1) RGZZVESD: solid shaft, EP, hazardous duty, normal thrust, P-Base: 1-250 hp with Temperature Code: T2A
   2) RGZZVILESD: solid shaft, EP, hazardous duty, in-line thrust, P-Base: 1-250 hp with Temperature Code: T2A

C. MOTOR TYPES 1, 2 OR 3 RATED FOR INVERTER DUTY SERVICE:

1. Baldor-Reliance Electric Inc.:

a. V*S Master XT:
   1) Variable Torque rated motor
   2) Constant Torque rated motor

2. Baldor-Reliance:

a. Vertical and horizontal.

b. TEBC, TENV, and TEFC:
   1) Variable Torque rated motor

2) Constant Torque rated motor

3. General Electric Inc.:

a. KAF design for ODP, TEFC, or TEFC Severe Duty enclosures

b. KAF design in horizontal TEFC Severe Duty and EP enclosures with A$D construction for constant torque: 1000:1

c. X$D Ultra for Severe Duty IEEE 841

d. Value Line WP-1 vertical deep well:
1) hollow-shaft, high-thrust, high-efficiency
2) inverter duty with 4:1 turndown,
3) 3600, 1800, 1200 rpm
4) 5-300 horsepower

4. Emerson US Electrical Motors:

a. VFM - Horizontal (TEFC) IEEE 841 Plus S:
1) Variable Torque rated motor: 10:1 turndown
2) Constant Torque rated motor: 4:1 turndown

5. Siemens:

a. TEFC RGZESDI:
1) Variable Torque rated motor
2) Constant Torque rated motor: 10:1 turndown

b. TEBC RGZESDI:
1) Constant Torque: 1000:1 turndown
2) Blower cooled

c. EP RGZZESDI:
1) Variable Torque: 6:1 turndown
2) Constant Torque: 6:1 turndown

2.02 GENERAL

A. NAMEPLATES:

Motor nameplates shall be engraved or stamped stainless steel. Information shall include those items enumerated in NEMA Standard MG 1, as applicable. Nameplates shall be permanently fastened to the motor frame and shall be visibly positioned for inspection.

Additionally, provide the following information on nameplates or additional nameplates for:

1. Motors 1/2 horsepower and larger: Indicate the ABMA L-10 rated life for the

motor bearings based on load data.

2. Motors 2 to 50 horsepower: Indicate the NEMA nominal efficiency.

3. Motors 50 horsepower and larger: Indicate NEMA guaranteed minimum efficiency.

4. Explosion-Proof motors: Indicate UL frame temperature limit code.

5. Space heater information.

6. NEMA MG 1 Over Temperature Protection Type Number.

7. Temperature device rating and alarm and shutdown setpoint information.

8. Provide motor nameplates for motors located in Class I Division 2, Groups B, C, and D areas for motors with frames 364T and larger: Certified for Class I, Division 2, Groups B, C, and D; Temperature Code T3C.

B. CONSTRUCTION:

All motors provided under this specification shall have the following features of construction:

1. Frames:

   a. Cast iron frames for TEFC motors and motors 60 horsepower and larger.

   b. Steel frames for non-TEFC motors smaller than 50 horsepower.

   c. Aluminum frame motors will not be permitted.

2. Stamped steel or cast metal fan shrouds with non-sparking fan blades.

3. Non-hygroscopic motor leads.

4. NEMA Design-B as standard design. NEMA Design-A, C, or D shall be identified as custom design features in the driven equipment specifications.

6. Motor Service Factor (percent of additional horsepower):

   a. SF: 1.15 for Types-1, 2, and 3 Sine-wave motors
   b. SF: 1.0 for Inverter Duty motors.
   c. SF dual rating: 1.15 Sine-wave and 1.0 Inverter Duty.

7. Grounding terminal in conduit box.

8. Stainless Steel nameplate.

2.03 MOTORS LESS THAN 1/2 HORSEPOWER

A. GENERAL:

Motors less than 1/2 horsepower shall be squirrel cage, single phase, capacitor start, and induction run type with Class B or F insulation. Fan motors rated 1/8 horsepower or less may be split-phase or shaded-pole type. Windings shall be copper.

B. RATING:

Motors shall be rated 115 volts, single phase, 60 hertz, and shall be continuous-time rated in conformance with NEMA Standard MG 1. Motors shall be non-overloading at all points of the equipment operation.

C. ENCLOSURES:

Motor enclosures shall be as defined in NEMA MG 1. Motors shall have totally enclosed fan cooled (TEFC) or totally enclosed non-ventilated (TENV) enclosures, unless specified otherwise in the driven equipment specification.

Explosion-proof (EP or XP) motors shall bear the UL Label for Class I, Division 1, Group D hazardous locations. The nameplate shall indicate the UL frame temperature limit code T2A. The enclosure surface temperature shall not exceed 280 degrees C. Provide self-protected over-temperature device in the motor to detect and automatically de-energize the motor if the frame temperature limit is exceeded and automatically reset.

2.04 MOTORS 1/2 HORSEPOWER THROUGH 250 HORSEPOWER

A. GENERAL:

Motors 1/2 horsepower through 250 horsepower shall have copper windings and shall be three phase, squirrel cage, induction type rated for full-voltage start and continuous duty and rated for 460-Vac.

Motors shall have a NEMA MG 1 design for the duty service imposed by the driven equipment such as frequent starting, intermittent overload, high inertia, mounting configuration, or service environment.

B. RATING:

Motors shall be rated 460 volts, three-phase, 60-Hertz, and shall be continuous time rated in accordance with NEMA Standard MG 1. Refer to the driven equipment specification for custom motors or special purpose motors with voltage rating above 460 volts.

Unless specified otherwise, motors shall have a service factor of 1.15 with additional 15-percent horsepower. Motors shall not be required to exceed the nameplate rating at service factor 1.00.

C. MOTOR TYPE CLASSIFICATIONS:

1. GENERAL:

a. Definition of terms shall be in accordance with NEMA MG 1.

2. TYPE 1 MOTORS:

a. Enclosure: Open drip-proof, guarded ventilation openings (ODP).

b. Class F insulation and Class B temperature rise at the motor's nominal rating.

3. TYPE 2 MOTORS:

a. Enclosure: Totally enclosed, fan cooled (TEFC).

b. Class F insulation and Class B temperature rise at the motor's nominal rating.

c. Conform to IEEE 841 Chemical Industry-Severe Duty rating through 500 Horsepower.

d. Surfaces shall be coated with a corrosion-resistant treatment such as

an epoxy paint that passes ASTM B117 for 96-hours.

e. No load airborne sound power level below 90-dBA per MG 1 Part-9.

f. Breather/drain fitting instead of solid drain plug.

g. International Protection Standard IP55 bearing enclosure.

4. TYPE 3 MOTORS:

a. Enclosure: Explosion-proof motors (EP or XP).

b. UL listed in accordance with UL 674 for Class I, Group D for Hazardous Atmospheres.

c. Bear UL Label for Class I, Division 1, Group D Hazardous locations.

d. UL-approved breather/drain device in the motor drain hole.

e. Class F insulation.

f. Nameplate: Indicate the UL frame temperature limit code T2A without thermostat and T2D with thermostat.

g. Rated for the UL surface temperature limit codes for Class I Group D for gasoline, petroleum, alcohols, natural gas etc:

1) Motor designed below the UL frame temperature limit code T2A of 280 degrees C or

2) Provide an internal frame temperature thermostat that meets the UL frame temperature limit code T2D of 215 degrees C with normally closed contact rated 5-amperes at 115-Vac.

D. THERMAL PROTECTION:

Type 1, Type 2 and Type 3 motors that require motor over-temperature protection, as defined in NEMA MG 1-12, with the motor controller interface wiring and devices as indicated on the drawings for the following:

1. Inverter duty motors and totally-enclosed-air-over (TEAO) motors:

a. NEMA Type-2 motor over-temperature self-protection: Thermal-overload, self-reset bimetallic Klixon switch for motors 5 horsepower and smaller.

b. Motors larger than 5 horsepower require controller alarm / trip:

1) Self-powered by motor temperature or by motor voltage: the motor mounted auxiliary device with two Form-C output contacts wired to variable speed or adjustable frequency drive to shut down the motor controller. Both the normally open contact and the normally closed contact shall be available at the motor terminal box for remote alarm and shutdown functions. Indicate the setpoints on the temperature device nameplate.

2) Non-self-powered power thermal devices are prohibited.

3) Factory set thermal protection device with alarm and trip setpoints indicated on the motor device nameplate.

4) Factory wired to separate motor termination box.

2. Motors 300 horsepower and larger and higher voltage:

a. NEMA Type-1 thermal protection: Two-100-ohm platinum RTDs in each

winding.

b. Resistance Temperature Detectors (RTD) wired to separate motor termination box with wiring diagram provide.

c. Provide RTD monitor and transmitter at the motor, as indicated or

d. Provide RTD monitor at the motor controller, as indicated.

e. Indicated alarm and trip setpoints on the motor device nameplate.

3. Auxiliary equipment shall have normally closed NEMA ICS 2 B300 contacts and shall be housed in NEMA 250 enclosures as follows:

a. Type 1 motors NEMA 12
b. Type 2 motors NEMA 4
c. Type 3 motors NEMA 7D

E. INVERTER DUTY MOTORS:

Motors for use with adjustable frequency controllers shall be inverter duty motors specifically designed for inverter service for the speed range and load torque characteristic required by the associated driven equipment. Inverter duty motors shall be specifically certified compatible with the adjustable frequency controller and driven equipment, as specified in Section 11000-1.01C Unit Responsibility.

Motors for use with adjustable frequency controllers shall not exceed NEMA MG 1, Class B temperature rise when operating over the specified speed range on the adjustable frequency controllers specified in Section 11069 with the specified load speed/torque characteristic.

Inverter duty rated motors shall have 4:1 turndown with variable torque motor controllers or constant torque motor controllers rating designed to operate from 25% of base speed to base speed continuously with full load current and torque without exceeding the Class F insulation with B temperature rise.

Torque requirement for greater turndown and slower speed applications is a custom design; refer to the driven equipment specification for additional requirements. Inverter duty rated motors shall be designed to operate over the speed or frequency range specified.

Motor insulation shall be designed to meet 2000-volt peak at a minimum of 0.1 micro-second rise time which exceeds the NEMA MG 1, Part 31: 1600-volt peak requirement for the 460 volt motors.

Provide inverter duty motors with NEMA Type 2 over-temperature protection as specified in NEMA MG 1-12. Provide motor mounted and motor powered winding temperature device with a 5-ampere normally open and normally closed output contacts at the motor terminal box for monitoring by the adjustable frequency controller and shutdown where the temperature exceed 165 degrees C.

Inverter duty motors shall have electrically insulated bearings or shall be equipped with a shaft-grounding unit mounted on the fan housing with stub shaft extended from the motor shaft. Larger motors, using the shaft-grounding unit, shall be equipped with two brushes, totally enclosed, and sealed against environmental contamination.

F. VERTICAL MOTORS:

Vertical motors shall be solid-shaft P-base type specifically designed for vertical installation. Thrust bearing rating shall be compatible with the loads imposed by the driven equipment. Universal position motors are not acceptable.

Vertical motors shall conform to Type 1, Type 2, or Type 3 in accordance with the location and use. Vertical motors specified or indicated as rated for Inverter Duty Motor shall be as specified herein.

G. MOTOR EFFICIENCY:

NEMA Premium™ efficiency electric motor, single-speed, polyphase, 1-500 horsepower, 3600-rpm 2-pole, 1800-rpm 4-pole, and 1200-rpm 6-pole, squirrel cage induction motors, NEMA Design A or B, continuous rated. NEMA Standards Publication MG 1 2003, in Tables 12-12 and 12-13, respectively.

433.Table 1
Nominal Efficiencies For "NEMA Premium™" Induction Motors
Rated 600 Volts Or Less (Random Wound)

	435.Open Drip-Proof			436.Totally Enclosed Fan-Cooled		
434. P	437.6-pole	438.4-pole	439.2-pole	440.6-pole	441.4-pole	442.2-pole
443.	444.82.5	445.85.5	446.77.0*	447.82.5	448.85.5	449.77.0
450.5	451.86.5	452.86.5	453.84.0	454.87.5	455.86.5	456.84.0
457.	458.87.5	459.86.5	460.85.5	461.88.5	462.86.5	463.85.5
464.	465.88.5	466.89.5	467.85.5	468.89.5	469.89.5	470.86.5
471.	472.89.5	473.89.5	474.86.5	475.89.5	476.89.5	477.88.5
478.5	479.90.2	480.91.0	481.88.5	482.91.0	483.91.7	484.89.5

433.Table 1
Nominal Efficiencies For "NEMA Premium™" Induction Motors
Rated 600 Volts Or Less (Random Wound)

	435.Open Drip-Proof			436.Totally Enclosed Fan-Cooled		
434. P	437.6-pole	438.4-pole	439.2-pole	440.6-pole	441.4-pole	442.2-pole
485.0	486.91.7	487.91.7	488.89.5	489.91.0	490.91.7	491.90.2
492.5	493.91.7	494.93.0	495.90.2	496.91.7	497.92.4	498.91.0
499.0	500.92.4	501.93.0	502.91.0	503.91.7	504.93.0	505.91.0
506.5	507.93.0	508.93.6	509.91.7	510.93.0	511.93.6	512.91.7
513.0	514.93.6	515.94.1	516.91.7	517.93.0	518.93.6	519.91.7
520.0	521.94.1	522.94.1	523.92.4	524.94.1	525.94.1	526.92.4
527.0	528.94.1	529.94.5	530.93.0	531.94.1	532.94.5	533.93.0
534.0	535.94.5	536.95.0	537.93.6	538.94.5	539.95.0	540.93.6
5415	542.94.5	543.95.0	544.93.6	545.94.5	546.95.4	547.93.6
5480 0	549.95.0	550.95.4	551.93.6	552.95.0	553.95.4	554.94.1
5552 5	556.95.0	557.95.4	558.94.1	559.95.0	560.95.4	561.95.0
5625 0	563.95.4	564.95.8	565.94.1	566.95.8	567.95.8	568.95.0
5690 0	570.95.4	571.95.8	572.95.0	573.95.8	574.96.2	575.95.4
5765 0	577.95.4	578.95.8	579.95.0	580.95.8	581.96.2	582.95.8

433.Table 1
Nominal Efficiencies For "NEMA Premium™" Induction Motors
Rated 600 Volts Or Less (Random Wound)

	435.Open Drip-Proof			436.Totally Enclosed Fan-Cooled		
434. P	437.6-pole	438.4-pole	439.2-pole	440.6-pole	441.4-pole	442.2-pole
5830 0	**584.95.4**	**585.95.8**	586.95.4	587.95.8	588.96.2	589.95.8
5905 0	591.95.4	592.95.8	593.95.4	594.95.8	595.96.2	596.95.8
5970 0	598.95.8	599.95.8	600.95.8	601.95.8	602.96.2	603.95.8
6045 0	605.96.2	606.96.2	607.95.8	608.95.8	609.96.2	610.95.8
6110 0	612.96.2	613.96.2	614.95.8	615.95.8	616.96.2	617.95.8

618. Table 2
Nominal Efficiencies For "NEMA Premium™" Induction Motors
Rated Medium Volts 5kV or Less (Form Wound)

	620.Open Drip-Proof			621.Totally Enclosed Fan-Cooled		
619 P	622.6-pole	623.4-pole	624.2-pole	625.6-pole	626.4-pole	627.2-pole
62850	629.95.0	630.95.0	631.94.5	632.95.0	633.95.0	634.95.0
63500	636.95.0	637.95.0	638.94.5	639.95.0	640.95.0	641.95.0
64250	643.95.0	644.95.0	645.94.5	646.95.0	647.95.0	648.95.0
64900	650.95.0	651.95.0	652.94.5	653.95.0	654.95.0	655.95.0

656 50	657.95 .0	658.95.0	659.94.5	660.95.0	661.95 .0	662.95.0
663 00	664.95 .0	665.95.0	666.94.5	667.95.0	668.95 .0	669.95.0

Motors in Table 3 shall be in accordance with IEEE 841 minimum nameplate efficiency for energy efficient 900-rpm 8-pole motors determined in accordance with IEEE 112B testing procedures.

Table 3
IEEE STD 841-2001

Horsepower	Guaranteed Motor Minimum Efficiency (percent)
1	70.0
1.5	72.0
2	80.0
3	81.5
5	82.5
7.5	82.5
10	86.5
15	86.5
20	87.5
25	87.5
30	89.5
40	89.5
50	90.2
60	90.2
75	91.7
100	91.7
125	92.4
150	92.4
200	92.4
250	93.6
300	94.1
350	94.1
400	94.1
450	94.1

Table 3
IEEE STD 841-2001

Horsepower	Guaranteed Motor Minimum Efficiency (percent)
500	94.1

H. CONDUIT BOXES:

Conduit boxes shall be sized based on the conduit number and conduit size indicated on the drawings. Provide over-sized boxes with the number of openings as required to accommodate the conduits required. Replace undersized conduit boxes.

Conduit boxes shall be split construction with threaded hubs and shall conform to IEEE 841 for Type 2 motors. Motors shall be furnished with petroleum-resistant gaskets at the base of the conduit box and between the halves of the conduit box

Conduit boxes shall be designed to rotate in order to permit installation in any of four positions 90 degrees apart. Motors shall have grounding lug located within the conduit box for the ground connection.

Provide separate conduit boxes for temperature devices and space heaters.

I. BEARINGS:

Bearings may be oil or grease lubricated ball bearings, angle contact roller bearings for axial thrust loads, and cylindrical bearings for radial-only loads. Bearings shall be rated for a minimum L-10 life of 100,000 hours in accordance with ABMA 9 or 11 at the ambient temperature specified.

Motor designs employing cartridge type bearings will not be accepted. Bearings shall be fitted with lubricant fill and drain or relief fittings. Belt loads shall not exceed forces calculated from NEMA MG 1 Table 14-1.

J. LIFTING EYES:

Provide lifting eyes per NEMA standard with a safety factor of 5. Generally, motors weighing more than 50 pounds shall be fitted with at least one lifting eye and motors over 150 pounds or 150 horsepower shall be fitted with two lifting eyes.

K. SPACE HEATERS:

Where shown on the Drawings or Schedules, furnish motors with space heaters to prevent condensation inside the motor enclosure after motor shutdown and maintain the temperature of the winding at not less than 5 degrees C above outside ambient temperature.

Heaters shall be flexible wraparound type rated 120 volts, single phase, 60 Hertz. The space heater rating in watts and volts shall be noted on the motor nameplate or on a second nameplate. Space heater leads H1 and H2 shall be brought to a separate terminal block or pigtails

in the motor conduit box or separate conduit box with a threaded conduit opening. Provide separate label on small motors.

L. MOTOR SHAFT GROUND RING

Provide shaft ground ring (SGR) kit during factory motor assembly on inverter duty motors with NEMA ODP enclosures and TEFC enclosures operating on AFD motor controllers, including motors with insulated or ceramic bearings.

SGR kits shall be factory install. If not received with the kits installed, then field install the kits: Install the shaft ground ring, adhesive ring, grounding pig tail in accordance with the manufacturer's installation instructions. Ground the motor frame to the ground grid.

Do not provide SGR grounding kit devices on explosionproof motors located in Division 1 or Division 2 hazardous locations, provide alternate factory provided means.

Provide Electro Static Technology's AEGIS Shaft Grounding Ring for Bearing Protection http://www.est-aegis.com/index.html or equal:

1. Install circumferential ring of conductive micro fibers to reduce the shaft voltage, to divert current away from the bearings, and to protect bearings in attached equipment.
2. Install on either drive-end or non-drive-end of motors less than 100-horsepower.
3. Insulate the one bearing and install Shaft Grounding Ring on the opposite drive-end of motors 100-horsepower and larger.
4. Install with conductive epoxy to ensure ground connection from the SGR to motor frame.
5. Verify the discharge path for shaft voltages to ground.

2.05 PRODUCT DATA

The following product data shall be provided for each motor in accordance with Section 01300:

1. Operating and maintenance information as part of the motor driven equipment O&M manual as specified in Section 01730.
2. Include overhaul instructions in operation and maintenance information for motor driven equipment that is 50 horsepower and above.
3. Factory motor prototype test results specified in paragraph 11060-1.02 C.
4. Written warranty specified in paragraph 11060-1.02 D.

PART 3--EXECUTION

3.01 GROUNDING AND BONDING

Verify the circuit ground cable (green) is identified and connected to the grounding lug terminal in the conduit box.

Provide supplementary grounding by installing a bond from the motor frame to the grounding electrode system as indicated on the drawings.

3.02 FIELD COATING OF MOTORS

Provide motors with the field applied, Epoxy Coating System E-2 with thickness of 16 mils dry film in accordance with specification Section 09900 – Coating Systems for motors located in corrosive environments. Example: Clarifier Motors.

Service Condition:
1. Immersed motor in nonpotable fluids
2. Non-immersed motor in corrosive environment

Refer to the driven equipment specification section for coating requirements.

Request clarification from Engineer with Request of Information, where motor locations are not specified in the driven equipment specification.

3.03 FIELD TESTING

Verify breather/drain fittings have been installed as specified herein.

Winding insulation resistance for motors shall be not less than 10-megohm measured with a 1000-Vac megohmmeter at 1-minute at or corrected to 40 degrees C.

Motor phases current imbalance testing for motors 50 horsepower and larger shall be performed as specified in Section 16030.

END OF SECTION

SECTION 11069

ADJUSTABLE FREQUENCY DRIVES

PART 1--GENERAL

1.01 DESCRIPTION

A. SCOPE:

This section specifies 480 Vac rated adjustable frequency drive motor controller systems using insulated gate bipolar transistors (IGBT) for pulse width modulation technology (PWM).

The AFDs specified in this section shall be the product of a single vendor and mounted in the specified cabinet enclosure.

The terms AFD (adjustable frequency drive), ASD (adjustable speed drive), VFD (variable frequency drive), and VSD (variable speed drive) are interchangeable for the purposes of this specification.

Refer to the drawings for control and monitoring requirements including special interlocking requirements. Refer to the Control Specification 17900 for the control description for the AFD systems.

B. SYSTEM REQUIREMENTS:

The AFD system shall convert 460 volt, 60-Hertz nominal input to a suitable voltage and frequency to cause a premium efficient, inverter duty, squirrel-cage induction motor to run at a speed proportional to an external input analog 4 to 20 ma dc or digital input command as specified for the required AFD speed range.

The AFD system shall include active front end drives, rectifier units, inverter units, control circuitry, protective equipment, input line reactors and output load reactors and other filters and accessories as necessary to provide the specified functions to meet voltage and current harmonics at the specified point of common connection and to mitigate the motor reflected voltage wave. Unless otherwise specified, the point of common connection for AFDs shall be the 480 distribution bus (motor control center, distribution panel, etc.) immediately upstream of the AFD.

The AFD system torque requirement shall match the pump torque requirement. Verify the equipment type and select variable torque (VT) or constant torque (CT). Select 6-Pulse units for motors less than 100 hp and 18-Pulse units for motors 100 hp and larger.

AFDs shall be provided as shown on the drawings.

C. ENVIRONMENTAL CONDITIONS:

Ambient conditions are specified in Section 01800.

D. SEISMIC:

Freestanding AFDs shall be braced per Section 01900.

1.02 QUALITY ASSURANCE

A. REFERENCES:

This section contains references to the following documents. They are a part of this section as specified and modified. Where a referenced document contains references to other standards, those documents are included as references under this section as if referenced directly. In the event of conflict between the requirements of this section and those of the listed documents, the requirements of this section shall prevail.

Unless otherwise specified, references to documents shall mean the documents in effect at the time of Advertisement for Bids or Invitation to Bid (or on the effective date of the Agreement if there were no Bids). If referenced documents have been discontinued by the issuing organization, references to those documents shall mean the replacement documents issued or otherwise identified by that organization or, if there are no replacement documents, the last version of the document before it was discontinued. Where document dates are given in the following listing, references to those documents shall mean the specific document version associated with that date, regardless of whether the document has been superseded by a version with a later date, discontinued or replaced.

Reference	Title
IEEE 519	IEEE Recommended Practices and Requirements for Harmonic Control in Electrical Power System
NEMA 250	Enclosures for Electrical Equipment (1000 Volts Maximum)
NEMA ICS 2	Industrial Control and Systems: Controllers, Contactors, and Overload Relays Rated 600 Volts
NEMA ICS 6	Industrial Control and Systems: Enclosures
NEMA ICS 7	Industrial Control and Systems: Adjustable-Speed Drives
NEMA ICS 7.1	Safety Standards for Construction and Guide for Selection, Installation, and Operation of Adjustable-Speed Drive Systems
NFPA 70	National Electrical Code (NEC)
UL Standard 508	Industrial Control Equipment

B. INDUSTRY STANDARDS:

The AFD shall be UL 508 listed and shall conform to the requirements specified in NEMA ICS 2, 6, 7 and 7.1.

C. UNIT RESPONSIBILITY:

The Contractor shall assign unit responsibility for the adjustable frequency drives in this section as specified in paragraph 11000-1.02 C. The Contractor shall submit letters of certification with the shop drawings from the AFD manufacturer, the motor manufacturer, and the driven equipment manufacturer stating that they have reviewed each application and that the combination will satisfy the application duties required, for the actual motor sizes required, regardless of deviations from the scheduled "nominal horsepower."

1.03 PRODUCT HANDLING

AFD units shall be shipped in air-cushion vans to ensure against shipping damage and packed in suitable protective containers. The units shall be inspected upon receipt for damage.

1.04 SUBMITTALS

The following information shall be provided in accordance with Section 01300:

1. A copy of this specification section, with addendum updates included, and all referenced and applicable sections, with addendum updates included, with each paragraph check-marked to indicate specification compliance or marked to indicate requested deviations from specification requirements.

   Check marks shall denote full compliance with a paragraph as a whole. If deviations from the specifications are indicated, and therefore requested by the Contractor, each deviation shall be underlined and denoted by a number in the margin to the right of the identified paragraph, referenced to a detailed written explanation of the reasons for requesting the deviation.

   The Engineer shall be the final authority for determining acceptability of requested deviations. The remaining portions of the paragraph not underlined will signify compliance on the part of the Contractor with the specifications.

   Failure to include a copy of the marked-up specification sections, along with justification(s) for any requested deviations to the specification requirements, with the submittal shall be sufficient cause for rejection of the entire submittal with no further consideration.

2. A copy of the contract document control diagrams and process and instrumentation diagrams relating to the submitted equipment, with addendum updates that apply to the equipment in this section, marked to show specific changes necessary for the equipment proposed in the submittal.

   If no changes are required, the drawing or drawings shall be marked *"no changes required"*. Failure to include copies of the relevant drawings with the submittal shall be cause for rejection of the entire submittal with no further review.

3. Certificate of Unit Responsibility attesting that the Contractor has assigned, and that the manufacturer accepts, unit responsibility in accordance with the requirements of this Section and paragraph 11000-1.02 C. No other submittal material will be reviewed until the certificate has been received and found to be in conformance with these requirements.

4. Catalog and technical data including outline dimensions, shipping section dimensions, weight, and foundation requirements for all assemblies.

5. Schematic diagrams and wiring connection diagram showing functions and identification of terminals.

6. Voltage and current Total Harmonic Distortion (THD) calculations with line reactors or filter design to mitigate harmonics to meet IEEE-519, if applicable.

PART 2--PRODUCTS

2.01 MANUFACTURERS

The Owner and Engineer believe the following candidate manufacturers are capable of producing equipment and/or products that will satisfy the requirements of this Section. This statement, however, shall not be construed as an endorsement of a particular manufacturer's products, nor shall it be construed that named manufacturers' standard equipment or products will comply with the requirements of this Section. AFDs shall be installed in the custom enclosures as specified and Candidate manufacturers include:

1. ABB:
   a. ACS550 for 6-Pulse drives
   b. ACS800 for 18-Pulse drives
2. Toshiba Series:
   a. W7 18-Pulse for centrifugal fan and pump motors
   b. G7 18-Pulse for slow speed and high-torque motors
3. Cutler-Hammer
   a. SVZ9000 for 6 pulse drives
   b. CPX9000 for 18 pulse drives
4. Square D Altivar Series:
   a. 61 or 71 for 6-Pulse drives
   b. Powergard Series C for18-Pulse drives
5. Siemens (Robicon W Series 6 or 18 Pulse drives)
6. Allen Bradley PowerFlex 700 Series drives
7. Danfoss
8. Or approved equal

2.02 ENCLOSURES

Provide each AFD in a NEMA 12 ventilated and filtered enclosure with fan cooling and conformal coating protection on circuit boards for corrosive atmosphere protection. The air filters shall be washable type.

A. GENERAL:

Provide enclosures with AFDs and custom control as required for the project and as indicated on the drawings. Each drive shall be designed for stand-alone operation and multiple drives shall not utilize shared components. Review the project site location, elevation, temperature, humidity, plant atmosphere, and load current-torque requirements to size the AFD and its associated enclosure with requirements specified herein and the control and monitoring devices and interlocks as indicated.

Enclosures shall be designed for indoor service. Each AFD system shall be mounted in a NEMA 250 internally force ventilated enclosure with UL approved Class 1 filters on ventilation openings. Enclosures shall be fabricated from 12-gage minimum thickness sheet steel with an interior frame or formed to provide a rigid structure.

Provide enclosure size to allow entry of power source and motor load cables as indicated on the drawings. Submit drawing of the source and load power cable location within the enclosure and indicated barriers from control and instrument wiring.

Door width shall not exceed 30 inches and shall be hung on removable-pin hinges, with three-point latch hardware, and handle latch for 3/8-inch-shackle padlock.

B. FINISH AND COATINGS:

AFD systems enclosures shall be finished with corrosion protection coatings inside and outside for hydrogen sulfide atmospheres. The electrical and electronic assemblies shall have conformal coatings.

2.03 AFD ASSEMBLIES

A. GENERAL:

AFDs shall include the following assemblies:

1. Flanged type power disconnect using a thermal magnetic circuit breaker or fused disconnect sized for the specific application by the manufacturer.

2. 6 pulse drives shall include a line input harmonic filter, for harmonic mitigation with adaptive passive technology. MTE Matrix Series D or approved equal.

3. 6 pulse drives shall include a load reactor for dV/dT mitigation or motor terminator units for addressing dv/dt effects at the motor for all motors

300 feet or more from the AFD. MTE RL reactors, 5% impedance open reactor or approved equal.

4. Rectifier, direct current bus filter, and inverter.

5. Control circuitry interface with Operator Interface Unit

6. Output protection including phase overload

B. AFD FEATURES:

Provided with the following features:

1. Fused control circuit transformer and microprocessor for system logic sequencing functions. Provide fuses with blown fuse indicator lamps.

2. Accept 4 to 20 mAdc speed reference signal.

3. A 4 to 20 mAdc output signal proportional to inverter output frequency for the speed range specified.

4. Adjustable minimum/maximum frequency limits:

    a. Minimum frequency shall be adjustable from 6 to 40 Hertz.
    b. Maximum frequency shall be adjustable from 48 to 90 Hertz.

5. Adjustable and independent timed linear acceleration and deceleration functions, adjustable from 6 to 20 seconds.

6. Current limiting.

7. Automatic restart.

8. Control Wiring:

    a. 600 volt stranded copper
    b. 90 degrees C color-coded insulation
    c. No. 16 AWG

9. Wiring Identification and Termination: Crimp type wire lugs with sleeve type markers at each termination point and numbered terminal blocks for external connections.

10. Electrically isolated discrete output contacts for ready, running, remote mode status and trouble alarm.

11. Conformal coated terminal blocks for control and signal wires entering and leaving the controller.

12. Control Power: Provide a 120 Vac, triple fused, control power transformer for cooling fans and external control circuits when required. Control circuits shall be isolated from power circuits by distance and by insulated barriers.

13. Provide 120 Vac or 24 Vdc as required for Operator Interface Unit.

14. Drives for submersible pump motors shall be furnished with circuitry to interface with the motor leak and temperature protection modules (such as the Flygt CAS module). Coordinate with pump supplier and obtain the pump/motor protection devices for mounting in the equipment structure as required. See the pump motor schematic diagram shown on the drawings for additional information.

C. FUNCTIONAL REQUIREMENTS:

1. SUPPLY POWER: Operate continuously with supply power of 480 volts plus or minus 10 percent, 60 Hertz plus or minus 3 percent and remain on line and operate without damage to the AFD or connected load during a supply power under-voltage variation to the drive up to 85% of its nominal value for 30 milliseconds at full load.

2. ENVIRONMENTAL CONDITIONS:

a.	Ambient temperature:	refer to Section 01800.
b.	Atmosphere:	refer to Contract drawings and Section 16000.

3. LOAD: Capable of driving the specified maximum motor load continuously and under the following conditions:

   a. Deliver 110 percent of the specified load for up to 60 seconds in variable torque applications.

   b. Deliver 150 percent of the specified load for up to 60 seconds in constant torque applications.

4. EFFICIENCY: Not less than 95 percent at 60 Hertz output driving the specified maximum load at rated torque and speed at 40 degrees C ambient based on measured input power versus output power with all specified components in the system.

5. FREQUENCY AND VOLTAGE REGULATION: Output frequency regulated to within 0.6 Hertz of the signal/output frequency relationship. Output voltage regulated to within 1.0 percent to produce minimum motor heating at any operating frequency within the specified range.

6. FREQUENCY RANGE: AFD shall be capable of continuous operation with the specified load at any frequency between 6 and 60 Hertz unless noted otherwise.

7. SPACE AND AFD ACCESS:

   a. Enclosure size shall not exceed the size allotments specified on the drawings nor shall any portion of the AFD system exceed a height of 90 inches.

   b. Front accessible only and shall not require rear access.

   c. Mount against the wall without any clearance for ventilation or other purposes.

   d. Submit AFD in the enclosure drawing with the detail of front door and the internal arrangement, including the feeder and motor cables, and the control cables, and the instrument cable location and terminations.

8. AMBIENT NOISE: Free field noise generated shall not exceed 85 dBA at 3 feet out from any point on the AFD enclosure under any normal operating condition.

9. MOTOR COORDINATION: AFDs shall be configured as required to maintain output voltage peaks at the connected motor windings from reaching levels damaging to the motor insulation. Provide protection integral to the AFD or as protective hardware to be installed at the motors.

   Where motor terminator units are provided, they shall be rated for the environment in which they are located. Motor terminator units shall be:

   a. Allen Bradley 1204 Motor Terminator for AFD with the maximum carrier frequency of 6 kilohertz,
   b. Cutler Hammer Reflected Wave Trap (RWT) with the maximum carrier frequency of 12 kilohertz,
   c. Or Equal product

D. PROTECTION AND ANNUNCIATION:

1. OVERCURRENT PROTECTION: Electronic current limit at 150 percent of motor nameplate current and provide motor running overcurrent protection in compliance with NFPA 70.

2. SHORT CIRCUIT PROTECTION: Protected against load faults: bolted faults, phase to phase or phase to ground shall not damage the unit. Fault protection based on a power source short circuit capacity of 65,000 amperes RMS symmetrical at the AFD power input terminals with impedance or current limiting device provided.

3. LINE VOLTAGE: Protected against high and low line voltage all phases.

4. INTERNAL FAULTS: Internal fault monitoring system to detect malfunctions to protect from transient and sustained faults and to limit damage that may be caused.

5. MOTOR OVER TEMPERATURE: Interface to motor over temperature device 2-ampere output contact to shut down and alarm if the motor becomes overheated.

6. FAULT ALARM: Indicates the cause of any shutdown visible on the AFD keypad/display without opening the AFD enclosure. As a minimum, the following faults shall be alarmed:

    a. Motor over-temperature

    b. Motor overcurrent

    c. Incoming power line over/under/unbalanced-voltage

    d. AFD over-temperature

    e. AFD over-voltage

    f. AFD control failure

7. SAFETY FEATURES: The AFD shall include:

    a. Padlock main disconnect handle in the “OFF” position.

    b. Mechanical interlock to prevent opening enclosure door with disconnect in the “ON” position while the unit door is open.

    c. Auxiliary contact on main disconnect to isolate 120Vac control power when fed from external source.

    d. Barriers and warning signs on terminals that are energized with the power disconnect “OFF”.

    e. Separation and insulated barriers between the power and control and instrument products.

    f. External emergency stop input

8. REVERSE DIRECTION PROTECTION: Provide protection from inadvertent operation in reverse where reverse rotation can damage the driven equipment.

9. CRITICAL SPEED BYPASS: Provide capability to program speed bypass for minimum two critical speed points.

9. TRANSIENT VOLTAGE PROTECTION: Provide solid state transient voltage protection to meet or exceed ANSI C37.90.

2.04 CONTROL AND MONITORING DEVICES

Front door mounted on the AFD enclosure between 36 and 72 inches above the floor for each unit:

1. Digital Operator keypad/display.

2. Hand/Off/Auto door mounted selector switch.

3. Manual speed control: OIU function

4. Provide the following local indicators and controls with 30mm NEMA 4 oil tight devices as specified:

   a. Hand/Off/Auto door mounted selector switch

   b. Status Indicators (ON, OFF, FAULT)

   c. Reset Pushbutton

   d. Emergency Stop

   e. Any additional features as shown on the contract drawings; including schematics and P&ID diagrams

5. Internal terminal strips for remote monitoring:

   a. Run status

   b. Trouble / Fail alarm

   c. Auto Mode status

   d. Motor speed feedback 4-20mA

   e. Motor Current, 4-20mA

   f. Additional devices as indicated on the drawings.

A. OPERATOR INTERFACE UNIT:

1. Digital keypad/display for monitoring and controlling the drive and to input drive parameter settings with a backlit LCD or equally visible display with a minimum of 16 characters per line.

2. Digital keypad for numerical settings in English engineering units and a guide to parameter settings. Setup operations and adjustments stored in non-volatile EEPROM memory transferable to new and spare boards. Settings shall be protected from unauthorized tampering, revision, or adjustment by a personal lockout code.

3. The digital keypad to provide programming of the drive and include:

   a. Up and Down arrow keys: Increase or decrease output frequency or data values.

   b. Monitor key: Selection of control mode.

   c. Run and Stop keys: Starting and stopping in the manual mode.

   d. Fault clear / Enter keys: Reset fault conditions and enter changes.

   e. Program key: Enter the program mode and adjust parameters.

   f. Remote / Local Location keys: Operation location and local speed control.

   g. Auto / Manual Mode keys: Program mode.

   h. Number keys: 0 through 9 keys to access specific parameters.

   i. Keypad digital illustrations: English and display the last 5 faults.

   j. Frequency / Motor Speed Indication: Calibrated in Hertz and RPM.

   k. Run Status Indication.

   l. Ready Status Indication.

   m. Fault Alarm Indication.

B. CONTROL AND MONITORING COMMUNICATION:

1. Additional analog I/O as required for the project
2. Additional discrete I/O as required for the project

2.05 KEYPAD FUNCTIONS AND OPERATION

Adjustment of the following parameters through the OIU digital keypad:

1. Current limit and torque boost.

2. Maximum voltage level.

3. Minimum/Maximum speed, Volts/Hertz, Upper and Lower limit.

4. Adjustable acceleration rate and deceleration rate.

5. Electronic thermal overload setting.

6. Coast, controlled ramp or DC injection selectable modes of stopping.

7. PID setpoint and time-function selection.

8. Critical frequency avoidance: Three set points selectable from 0 to maximum frequency with set points adjustable from 0-30 Hertz.

2.06 SPARE PARTS

The following spare parts shall be supplied with each type or frame size AFD:

1. Three sets of all replaceable fuses.
2. 10 of each type pilot light lamp
3. Three of each type relay

2.07 PRODUCT DATA

The following information shall be provided in accordance with Section 01300:

1. Operation and maintenance information as specified in Section 01730, including:

   a. Final reviewed submittal.
   b. As-built drive configuration settings.

2. Installation certification Form 11000-A as specified in paragraph 11069-3.01.

3. Training certification Form 11000-B as specified in paragraph 11069-3.03.

PART 3—EXECUTION

3.01 FIELD INSTALLATION

Each adjustable speed controller shall be installed and tested by the Contractor with the assistance of factory-trained pump manufacturer engineer/technician and AFD engineer/technician in accordance with the manufacturer's specifications and Section 11069, and witnessed by the Engineer.

Manufacturers’ factory representatives shall provide field testing for devices including the setup of the Operator Interface Unit and the setup of the data communication devices, where used.

Upon satisfactory completion of the testing, the Contractor shall submit two certified copies of the test report to the Engineer.

Component failure during testing will require repeating any test associated with the failure or modified components to demonstrate proper operation.

The installation shall be certified on Form 11000-A specified in Section 01999.

1. Adjust drive and perform “start-up” tests as recommended by manufacturer. Set parameters and carrier frequency for existing motors to avoid insulation damage.

2. Establish proper direction of rotation for the motor controlled by the drive. Verify that the AFD is precluded from operating in a direction that can damage the driven equipment. Change motor or AFD power lead connection and not the AFD direction, where rotation is incorrect.

3. Verify that the drive will operate properly both in the “manual speed control mode” and in the “remote or automatic mode” from a remote speed signal input.

4. Set the maximum “locked rotor” current drawn during start-up recommended by the manufacturer and approved by the Engineer.

5. Set the minimum and maximum speeds and the acceleration and deceleration “ramps” recommended by the Engineer.

6. Verify the motor high temperature switch contacts are wired into the AFD 120 Vac control circuit and will trip on high winding temperature. Test or simulated the alarm and trip feature at the motor for high temperature and for high vibration, where used.

7. Operate the drive at 100 percent speed for one hour and monitor output current. The output current shall remain below the full load current listed on the motor nameplate.

8. Check for excessive heating of the drive and motor. Report any discrepancies to the Engineer.

3.02 HARMONIC TESTING

The Testing Firm specified in Section 16030 shall perform a harmonics acceptant test with all AFD motor controllers operating to verify compliance with IEEE-519 of less than 5 percent voltage THD and 12 percent current THD at the defined point of common connection when running from Power Utility power source with a BMI-Dranetz or equal harmonic test set that provides a hard-copy record of the test results.

The test shall also be run with power sourced from the standby generator where such a power source is being used at the project site. THD shall be limited to a maximum level of 8 percent voltage THD on standby generator operation.

Submit the test performance to the Engineer per latest version NETA ATS Acceptance Testing Specifications. Refer to the electrical testing specification Section 16030.

3.03 TRAINING

Two hours of onsite AFD operation and maintenance training shall be provided for the Owner's Operation and Maintenance Staff.

Manufacturers' factory representative shall conduct the training, upon acceptance of a resume submitted by the trainer.

Training shall be certified on Form 11000-B specified in Section 01999.

END OF SECTION

SECTION 11100

SLUICE GATES

PART 1--GENERAL

1.01 DESCRIPTION

A. SCOPE:

This section specifies sluice gates of cast iron construction for general wastewater treatment plant service as specified herein and shown on the Drawings**.** The Contractor shall assign unit responsibility as specified in paragraph 11000-1.02 C to the sluice gate manufacturer for the combined equipment consisting of sluice gate and operator.

The manufacturer shall review the mechanical and structural layout drawings to familiarize themselves with the location and the set-up of the equipment specified and shall assure themselves that the equipment specified is appropriate for and coordinated with what is shown on the contract drawings. The manufacturer shall also review the relevant electrical plan, one-line diagram, and process and instrumentation diagram drawing to ensure that the contract drawings are appropriate and coordinated with the equipment and controls specified.

B. TYPE:

Sluice gates shall be of cast iron construction with full metal wedges, flat frames, and wall thimbles.

C. EQUIPMENT LIST:

Equipment numbers are as follows:

Item	Equipment No.
Plant Influent Sluice Gate	GT-2010

D. OPERATING REQUIREMENTS:

Equipment No.	Opening Size, inch	Opening[a] direction	Bottom[a] seating	Frame[a] type	Design head, feet		Operator type
					Seating	Unseating	
GT-2010	30” dia	U	S	C	30	30	IV(EMTT)

[a]Abbreviations:

U = upward opening; D = downward opening; FB = flush bottom;
S = standard; SC = self-contained (yoke type); C = conventional

E. COMPONENT SIZING:

Operating forces used for determining the strength of gate components comprising of yokes, frames, discs, stems, disc nut pockets, and other load-bearing members shall be based on the sum of the guide friction force (computed using an opening breakway friction factor of 0.70) and the weight of disc and stem.

When the gate is in motion, the operating forces shall be based on the sum of the frictional force (using a guide friction factor of 0.35) and the weight of disc and stem.

1.02 REFERENCES

This section contains references to the following documents. They are a part of this section as specified and modified. Where a referenced document contains references to other standards, those documents are included as references under this section as if referenced directly. In the event of conflict between the requirements of this section and those of the listed documents, the requirements of this section shall prevail.

Unless otherwise specified, references to documents shall mean the documents in effect at the time of Advertisement for Bids or Invitation to Bid (or on the effective date of the Agreement if there were no Bids). If referenced documents have been discontinued by the issuing organization, references to those documents shall mean the replacement documents issued or otherwise identified by that organization or, if there are no replacement documents, the last version of the document before it was discontinued. Where document dates are given in the following listing, references to those documents shall mean the specific document version associated with that date, regardless of whether the document has been superseded by a version with a later date, discontinued or replaced.

Reference	Title
ASTM A126	Gray Iron Casting for Valves, Flanges and Pipe Fittings
ASTM A276	Stainless and Heat-Resisting Steel Bars and Shapes
ASTM B98	Copper-Silicon Alloy Rod, Bar and Shapes
ASTM B103	Phosphor Bronze Plate, Sheet, Strip and Roller Bar
ASTM B139	Phosphor Bronze Rod, Bar and Shapes
ASTM B584	Copper Alloy Sand Castings for General Applications
ASTM F593	Stainless Steel Bolts, Hex Cap Screws, and Studs
ASTM F594	Stainless Steel Nuts

Reference	Title
AWWA C501	Cast Iron Sluice Gates

1.03 SUBMITTALS

The following information shall be provided in accordance with Section 01300:

A copy of this specification section, with addendum updates included, and all referenced and applicable sections, with addendum updates included, with each paragraph check-marked to indicate specification compliance or marked to indicate requested deviations from specification requirements. Check marks (✓) shall denote full compliance with a paragraph as a whole. If deviations from the specifications are indicated, and therefore requested by the Contractor, each deviation shall be underlined and denoted by a number in the margin to the right of the identified paragraph, referenced to a detailed written explanation of the reasons for requesting the deviation. The Engineer shall be the final authority for determining acceptability of requested deviations. The remaining portions of the paragraph not underlined will signify compliance on the part of the Contractor with the specifications. *Failure to include a copy of the marked-up specification sections, along with justification(s) for any requested deviations to the specification requirements, with the submittal shall be sufficient cause for rejection of the entire submittal with no further consideration.*

Certificate of Unit Responsibility attesting that the Contractor has assigned, and that the manufacturer accepts, unit responsibility in accordance with the requirements of this Section and paragraph 11000-1.02 C. *No other submittal material will be reviewed until the certificate has been received and found to be in conformance with these requirements.*

Plan, cross section, and details showing proposed mounting for each size and typical application of gate.

PART 2--PRODUCTS

2.01 ACCEPTABLE PRODUCTS

Cast iron sluice gates shall be Rodney Hunt, Waterman, or equal, modified to meet specified requirements.

2.02 EQUIPMENT

A. SLUICE GATES:

Sluice gates shall meet the requirements of AWWA C501 except as otherwise specified. Sluice gates shall be of the heavy-duty type. Frames shall be flat back.

Sluice gates shall be provided, unless otherwise specified, with one-piece F-section cast iron wall thimbles. The vertical centerline shall be shown by permanent marks at the top and bottom of the machined face with the word "top" marked near the top center of the thimble opening.

Stems and stem guides shall be provided in accordance with AWWA C501, Sections 3.11 and 3.12. Unless otherwise specified, gates shall have single rising stems. Stems shall have 29-degree acme threads and be turned straight and true and honed to a smooth 63 micro-inch or better finish. Stem couplings, where required, shall be of the stem material. Stem guides shall be of the split, bronze bushed, adjustable type.

B. MATERIALS:

Component	Material
Gate, guide and frame	ASTM A126, Class B, cast iron
Seating faces	ASTM B103 or B139, bronze
Wall thimbles	ASTM A126, Class B, cast iron
Stems	ASTM A276, stainless steel, Type 304
Wedges, thrust nut, stem couplings	ASTM B584, bronze, CA872
Fasteners and adjusting hardware	ASTM A276, stainless steel, Type 304, or ASTM F593 and F594, stainless steel, group 1 or group 2
Yoke	ASTM A126, Class B, cast iron
Flush bottom seal	Neoprene
Flush bottom retainer	ASTM A276, stainless steel, Type 304 bar

2.03 OPERATORS

A. GENERAL:

Operators specified include hand-crank, handwheel, and T-wrench. Operators shall meet AWWA C501 specifications, except as otherwise specified, and shall be designed to meet the operating requirements specified in paragraph 11100-1.01 D. Plastic stem covers shall be provided as specified in AWWA C501, Section 3.14.5.

On both crank and handwheel manual operators, gears and bearings shall be enclosed in a weatherproof cast iron housing, and pressure type fittings shall be provided for grease lubrication of the bearings and gears. A maximum effort of 40 pounds pull on the crank or handwheel shall operate the gate under the specified operating conditions.

B. TYPE I:

Operator shall be the manual, geared, crank type. The operator shall be either pedestal or bench mounted as specified. Pedestal type floor stands shall be the offset type or the standard type with wall mounting bracket. The crank shall be 15 inches long.

The geared floor or bench stand shall have a weatherproof, cast iron housing, with a bronze operating nut, mounted on a high- strength cast iron pedestal baseplate. The operating nut shall be internally threaded with 29-degree acme threads corresponding to stem threading. Tapered roller bearings or ball bearings shall be located above and below the bronze operating nut to support the output thrust of the floor stand. The pinion shaft shall be mounted on tapered roller or needle bearings to resist axial and radial thrusts. Mechanical seals shall be provided around the operating nut and the pinion shaft to prevent lubrication from leaving the unit and moisture from entering the sealed housing. The reduction gear case shall be precision machined and equipped with tapered roller or needle bearings and sealed about the reduction shafts.

Operators shall be self-locking at any position of stem travel. The input shaft shall be fitted with an AWWA nut.

C. TYPE II: (NOT USED)

D. TYPE III:

Operator shall be the T-wrench type, including floor box, thrust bearings, and lift nut. Floor box shall be of fabricated steel, with galvanized steel hinged cover and embedded in the floor or mounted on a wall bracket as specified on the drawings. Floor box depth shall be such that the gate stem and operating nut does not protrude above the floor under any condition. Wall brackets shall be cast iron or fabricated steel. Thrust bearings shall be roller or ball bearing type, replaceable and protected by seals. Accessible pressure type grease fittings shall be provided for bearing lubrication. Operating nuts shall be AWWA standard 2-inch square head nuts. T-wrenches shall be 4 feet long, aluminum, with socket to match the operating nut.

E. TYPE IV: POWERED OPERATORS:

Power gate actuators are specified in Section 15185.

2.04 COATING SYSTEM

Sluice gates shall be shop coated with coating system EP as specified in Section 09900.

2.05 PRODUCT DATA

The following information shall be provided in accordance with Section 01300:

1. Product information, calculations, charts, or graphs to verify that the product provided meets the requirements set forth in this specification.

Affidavits of compliance in accordance with AWWA C501.

Applicable operation and maintenance information as specified in Section 01730.

PART 3--EXECUTION

3.01 INSTALLATION

Unless otherwise specified, sluice gates shall be installed in accordance with manufacturer's instructions.

3.02 TESTING

Shop seat clearance and operating tests shall be performed as per Section 4.2 of the AWWA Specification C501, and field operating and leakage tests shall be conducted as specified in Section 6.3 of the AWWA Specification C501.

END OF SECTION

SECTION 11109

FABRICATED STAINLESS STEEL SLIDE GATES

PART 1--GENERAL

1.01 DESCRIPTION

A. SCOPE:

This section specifies fabricated stainless steel self-contained slide gates for control of water and wastewater flows in a variety of applications at the Little River Water Reclamation facility.

The manufacturer shall review the mechanical layout drawings to familiarize themselves with the various locations, applications and the set-up of the equipment specified and shall assure themselves that the equipment specified is appropriate for and coordinated with what is shown on the contract drawings. The manufacturer shall also review the relevant electrical plan and one-line diagram and the relevant process and instrumentation diagram drawing to ensure that the contract drawings are appropriate and coordinated with the equipment and controls specified.

B. TYPE:

Self-contained slide gates shall be of stainless construction with gates and guides provided by one manufacturer.

C. EQUIPMENT LIST:

Equipment numbers are as follows:

Item	Equipment No.
Coarse Screen 1 Influent Isolation Gate	GT-2011-1
Coarse Screen 1 Effluent Isolation Gate	GT-2011-2
Coarse Screen 2 Influent Isolation Gate	GT-2012-1
Coarse Screen 2 Effluent Isolation Gate	GT-2012-2
Grit Bypass Channel Slide Gate	GT-2023
Grit Tank Influent Slide Gate	GT-2030-1
Grit Tank Effluent Slide Gate	GT-2030-2
Fine Screen 1 Influent Gate	GT-2041
Fine Screen 2 Influent Gate	GT-2042
Fine Screen 3 Influent Gate	GT-2043

Item	Equipment No.
Biological Basin 1 Influent Slide Gate	GT-2061-1
Biological Basin 2 Influent Slide Gate	GT-2062-1
Post Anoxic Tank 1 Influent Slide Gate	GT-3016-1
Post Anoxic Tank 2 Influent Slide Gate	GT-3026-1
MBR Feed Pump Station Diversion Gate 1	GT-3016-2
MBR Feed Pump Station Diversion Gate 2	GT-3026-2
Biological Basin 1 Outlet Control Weir Gate	GT-3016-3
Biological Basin 2 Outlet Control Weir Gate	GT-3026-3
De-Ox Basin 1 Influent Slide Gate	GT-3031
De-Ox Basin 2 Influent Slide Gate	GT-3032
De-Ox Basin 1 Effluent Slide Gate	GT-3015-1
De-Ox Basin 2 Effluent Slide Gate	GT-3025-1
Membrane Bioreactor 1 Influent Slide Gate	GT-5011
Membrane Bioreactor 2 Influent Slide Gate	GT-5021
Membrane Bioreactor 3 Influent Slide Gate	GT-5031
Membrane Bioreactor 4 Influent Slide Gate	GT-5041
Sludge Thickening Tank Influent Weir Gate	GT-5091
Sludge Thickening Tank Drain Gate	GT-5091-1
Sludge Holding Tank Drain Gate	GT-5091-2
UV Channel 1 Influent Slide Gate	GT-5110
UV Channel 2 Influent Slide Gate	GT-5120

Note that the UV channel effluent slide (control) gates shall be provided separately by the UV system supplier under Section 11737. The gates provided by the UV supplier shall meet or exceed the requirements of these specifications.

D. PERFORMANCE REQUIREMENTS

1. GENERAL: Self-contained slide gates shall be designed for continuous exposure to ambient conditions. Fluid temperature is expected to range from 70 degrees F to 85 degrees F. The gates may be exposed to fats, oils and greases as well as hydrogen sulfide concentrations typical of raw wastewater. Gates near chemical dosing points shall be capable of handling FeCl, NaOH, NaOCL, citric acid, and acetic acid exposure.

2. OPERATING CONDITIONS: Each gate shall be designed for continuous duty and shall be suitable for installation under the following conditions:

Equipment No.	Gate/opening size, inch[a]	Gate type[b]	Opening direction[c]	Bottom seating[d]	Design head, feet		Operator type[e]
					Seating	Unseating	
GT-2011-1	30” x 36”	C	U	FB	10	10	II (EMTI)
GT-2011-2	30” x 36”	C	U	FB	10	10	II (EMTI)
GT-2012-1	30” x 36”	C	U	FB	10	10	II (EMTI)
GT-2012-2	30” x 36”	C	U	FB	10	10	II (EMTI)
GT-2023	24” x 36”	C	U	FB	5	5	I
GT-2030-1	24” x 36”	C	U	FB	5	5	I
GT-2030-2	48” x 36”	C	U	FB	5	5	I
GT-2041	24” x 24”**	W	U	J	10	10	II (EMTI)
GT-2042	24” x 24”**	W	U	J	10	10	II (EMTI)
GT-2043	24” x 24”**	W	U	J	10	10	II (EMTI)
GT-2061-1	18” x 24”	C	U	J	5	5	I
GT-2062-1	18” x 24”	C	U	J	5	5	I
GT-3016-1	24” x 24”	W	U	J	15	15	II (EMTI)
GT-3016-2	24” x 24”	W	U	J	15	15	II (EMTI)
GT-3016-3[f]	10’ X 15”	W	D	J			I
GT-3026-1	24” x 24”	W	U	J	15	15	II (EMTI)
GT-3026-2	30” x30”	W	U	J	15	15	II (EMTI)
GT-3026-3[f]	10’ X 15”	W	D	J			I
GT-3031	18” x 24”	C	U	J	5	5	I
GT-3032	18” x 24”	C	U	J	5	5	I
GT-3015-1	20” x 20”	W	U	J	15	15	I
GT-3025-1	20” x 20”	W	U	J	15	15	I
GT-5011	48” x 48”	W	U	J	15	15	II (EMTI)
GT-5021	48” x 48”	W	U	J	15	15	II (EMTI)
GT-5031	48” x 48”	W	U	J	15	15	II EMTI)
GT-5041	48” x 48”	W	U	J	15	15	II (EMTI)
GT-5091	36” x 24”	W	D	J			I
GT-5091-1	12” x 12”	W	U	FB			I
GT-5091-2	12” x 12”	W	U	FB			I
GT-5110	18” x 42”	W	U	J	5	5	II (EMTI)

Equipment No.	Gate/opening size, inch[a]	Gate type[b]	Opening direction[c]	Bottom seating[d]	Design head, feet		Operator type[e]
					Seating	Unseating	
GT-5120	18” x 42”	W	U	J	5	5	II (EMTI)

Notes:

[a] Width by height
[b] C = channel-mounted with embedded frame, W = wall-mounted
[c] U = upward, D = downward
[d] FB = flush bottom, J = J-seal on invert
[e] I = manual operator, II = electric motor operator
[f] Weir gates shall have tandem operators and match existing gate dimension
** Contractor shall coordinate Fine Screen Influent Gate size with size of fine screen influent pipe connection size which may vary from 18” to 24” diameter.

1.02 QUALITY ASSURANCE

A. REFERENCES:

This section contains references to the following documents. They are a part of this section as specified and modified. Where a referenced document contains references to other standards, those documents are included as references under this section as if referenced directly. In the event of conflict between the requirements of this section and those of the listed documents, the requirements of this section shall prevail.

Unless otherwise specified, references to documents shall mean the documents in effect at the time of Advertisement for Bids or Invitation to Bid (or on the effective date of the Agreement if there were no Bids). If referenced documents have been discontinued by the issuing organization, references to those documents shall mean the replacement documents issued or otherwise identified by that organization or, if there are no replacement documents, the last version of the document before it was discontinued. Where document dates are given in the following listing, references to those documents shall mean the specific document version associated with that date, regardless of whether the document has been superseded by a version with a later date, discontinued or replaced.

Reference	Title
ASTM A276	Stainless and Heat-Resisting Steel Bars and Shapes
ASTM D2000	Rubber Products in Automotive Applications
AWWA C501	Cast-Iron Sluice Gates

B. UNIT RESPONSIBILITY:

The Contractor shall assign unit responsibility as specified in paragraph 11000-1.02C to the supplier of the fabricated slide gates for all equipment specified in this section. A certificate of unit responsibility shall be provided.

C. FACTORY TESTS:

No specific factory tests are specified.

D. SHIPMENT, PROTECTION, AND STORAGE:

Equipment shipment, protection, and storage shall conform to the requirements specified in Section 01605.

1.03 SUBMITTALS

The following information shall be provided in accordance with Section 01300:

A copy of this specification section, with addendum updates included, and all referenced and applicable sections, with addendum updates included, with each paragraph check-marked to indicate specification compliance or marked to indicate requested deviations from specification requirements. Check marks (✓) shall denote full compliance with a paragraph as a whole. If deviations from the specifications are indicated, and therefore requested by the Contractor, each deviation shall be underlined and denoted by a number in the margin to the right of the identified paragraph, referenced to a detailed written explanation of the reasons for requesting the deviation. The Engineer shall be the final authority for determining acceptability of requested deviations. The remaining portions of the paragraph not underlined will signify compliance on the part of the Contractor with the specifications. *Failure to include a copy of the marked-up specification sections, along with justification(s) for any requested deviations to the specification requirements, with the submittal shall be sufficient cause for rejection of the entire submittal with no further consideration.*

A copy of the contract document control diagrams, process and instrumentation diagrams and mechanical layout drawings relating to the submitted equipment, with addendum updates that apply to the equipment in this section, marked to show specific changes necessary for the equipment proposed in the submittal. If no changes are required, the drawing or drawings shall be marked "no changes required". *Failure to include copies of the relevant drawings with the submittal shall be cause for rejection of the entire submittal with no further review.*

Certificate of Unit Responsibility attesting that the Contractor has assigned unit responsibility in accordance with the requirements of this section and paragraph 11000-1.02 C. *No other submittal material will be reviewed until the certificate has been received and found to be in conformance with these requirements.*

Fabrication drawings with full dimensions.

Plan, cross section, and details showing proposed mounting for each size and typical application of gate.

PART 2--PRODUCTS

2.01 ACCEPTABLE PRODUCTS

The Owner and Engineer believe the following candidate manufacturers are capable of producing equipment and/or products that will satisfy the requirements of this Section. This statement, however, shall not be construed as an endorsement of a particular manufacturer's products, nor shall it be construed that named manufacturers' standard equipment or products will comply with the requirements of this Section. Candidate manufacturers shall be H. Fontaine / Rodney Hunt, Waterman, or approved equal, modified as necessary to meet the provisions of this specification.

2.02 MATERIALS

The equipment supplied under this section and all appurtenances shall be designed for passively resisting corrosion from free and combined chlorine residuals, chlorides, hydrogen sulfide, condensation containing sulfuric acid residual, and sulfates. The materials of construction shall meet or exceed the following:

Component	Material
Frames, slides, rails, and yokes	ASTM A276 or ASTM A240, Type 316L Stainless Steel
Fasteners and anchor bolts	ASTM A276, Type 316 Stainless Steel
Stems	ASTM A276, Stainless Steel, Type 304, 303 MX, or 316
Stem Guides	ASTM A276, Stainless Steel, Type 304L or 316L, with bronze or UHMW Polyethylene bushing
Seals	ASTM D2000, Grade AA625, Buna-N or neoprene rubber, or ASTM D4020 UHMW Polyethylene

Materials specified are considered the minimum acceptable for the purposes of durability, strength, and resistance to erosion and corrosion. The Contractor may propose alternative materials for the purpose of providing greater strength or to meet required stress limitations. However, alternative materials must provide at least the same qualities as those specified for the purpose, as determined by the Engineer.

2.03 EQUIPMENT FEATURES

A. GENERAL:

Design stresses shall not exceed the lesser of 40% of the yield strength or 25% of the ultimate strength of the materials at maximum load conditions. Minimum thickness of slide, its reinforcing members, and all structural components of the guide and frame shall be 0.25 inches.

B. FRAME AND GUIDES:

The gate frame shall be a rigid, welded unit, composed of the guide rails, cross bars, and deadrails, with a clear opening the same size as the waterway, unless otherwise specified. They shall be integral flange back or embedded type. The guides will be of sufficient length to support two-thirds (2/3) the height of the slide, when the gate is fully open. On wall mounted gates, compressible gaskets or grout shall be provided between frame and wall as needed to ensure full mating of surfaces and no leakage.

On self-contained gates, where the guides extend above the operating floor, they shall be sufficiently strong so that no further reinforcing will be required. The yoke to support the operating device shall be formed by members welded or bolted at the top of the guides. The arrangement of the yoke shall be such that the slide and stem can be removed without disconnecting the yoke. When the slide is too long to allow this, the yoke shall be bolted for easy removal.

The yoke shall be sufficiently strong to support the lift forces when subjected to a load of 100 pounds pull on the operator. The yoke shall be designed so that its deflection under full operating load will not exceed 1/360 of the gate width.

C. SLIDE:

The slide shall be plate reinforced with structural shapes welded to the plate. The slide shall not deflect more than 1/360 of the span of the gate under maximum head. Reinforcing ribs shall extend to the guides so that the seating surface of the guide is reinforced. The stem connection shall be either the clevis type, with structural members welded to the slide and a bolt to act as pivot pin, or a threaded and bolted (or keyed) thrust nut supported in welded nut pocket. The pocket and yoke of the gate shall withstand at least twice the rated thrust output of the operator at 40 pounds pull.

D. SEALING SYSTEM:

Flush bottom seal shall be of compressible neoprene and may be located in either the slide or the frame. With the slide open, the invert of the gate shall be flush with the channel or opening, with no pockets or cavities for the accumulation of solids.

Top and side seals shall be able to be replaced without removing the gate frame from the concrete or wall thimble.

Gates shall use a sealing system of neoprene and/or polyethylene to achieve the leakage

rates specified and to provide a durable sealing system. Sealing surfaces shall have a finish smoother than 125 micro-inch rms. Possible methods may include:

1. A minimum of two independent and adjustable ultra-high molecular weight polyethylene pressure pads with a maximum spacing of 12 inches in each guide to control the seal compressions. These shall provide point-to –point adjustment of the double hollow bulb seal located on the sides and top of the slide. Each bulb shall have a 1-inch outside diameter and a concentric hollow center, and shall be attached to the gate with UHMW polyethylene grommets and stainless steel fasteners. The invert shall be a stainless steel angle welded to the bottom of the guides to form the seating surface for the seals attached to the slide.

2. The slide shall fit into an extruded polyethylene guide. Side and top seals shall be self adjusting. A continuous compression cord within the side and top guide (frame side) shall ensure contact between the guide and the slide.

C. STEM:

Stems shall be manufactured of solid bar. The stem diameter shall be capable of withstanding twice the rated output of the operator at 40 pounds pull for manual operators, or 1.25 times the output thrust of operator for powered actuators (the hydraulic cylinder or the electric motor in stalled condition), and shall be supported such that 1/r ratio for the unsupported part of the stem shall not exceed 200. Stem threads shall be of cut ACME type.

Stems shall be rising type, except that non-rising stems shall be provided on gates with T-wrench/floor box type.

2.04 OPERATORS

A. GENERAL:

Operators shall be provided for each gate in accordance with the performance requirements specified Paragraph 11109 – 1.01 D. 2.

Operators shall be either pedestal or bench mounted as specified. Pedestal type floor standards shall be the offset type of the standard type with wall mounting bracket. Pedestal or bench stands shall be cast iron or aluminum. The head of the pedestal or bench stand operator shall have a solid bronze, internally threaded operating nut. The operator shall be mounted on antifriction roller bearings. Cranks and handwheels shall be removable from the operator.

B. TYPE I: MANUAL OPERATORS:

Manual operators shall be hand crank or handwheel type. Operators shall meet AWWA C501 specifications, except as otherwise specified, and shall be designed to meet the operating requirements specified in paragraph 11105-1.01 D. Clear plastic stem covers shall be provided as specified in AWWA C501, Section 3.14.5.

On both crank and handwheel type operators, gears and bearings shall be enclosed in a weatherproof housing, and pressure type fittings shall be provided for grease lubrication of the bearings and gears. A maximum effort of 40 pounds pull of the crank or handwheel shall operate the gate under the specified operating conditions.

C. TYPE II: POWERED OPERATORS:

Power gate actuators are specified in Section 15185.

2.05 PRODUCT DATA

The following information shall be provided in accordance with Section 01300:

1. Product information, charts, or graphs to verify that the product provided meets the requirements set forth in the specification.

Affidavits of compliance in accordance with AWWA C501.

Operating and maintenance information as specified in Section 01730.

PART 3--EXECUTION

3.01 INSTALLATION

The equipment shall be installed as specified and in accordance with the manufacturer's written recommendations. The equipment shall be installed and tested under the direction of factory-trained personnel. The installation shall be certified on Form 11000-A specified in Section 01999.

3.02 TESTING

Testing of equipment and systems shall be conducted in accordance with the requirements of Section 01660.

For purpose of this specification, field leakage tests shall be performed as specified in Section 6 of AWWA C501. The maximum allowable leakage rate shall be 0.20 gallons per minute per foot of seating perimeter for the seating and unseating heads specified. Field leakage tests shall be conducted with no head on one side of the gate being tested.

3.03 TRAINING

A minimum of 4 hours of training, as specified in Section 01664, shall be provided. Training shall be certified on Form 11000-B specified in Section 01999.

END OF SECTION

SECTION 11121

MULTI-RAKE BAR SCREENS AND DEWATERING UNITS FOR COARSE SCREENING APPLICATIONS

PART 1 – GENERAL

1.01 DESCRIPTION

A. SCOPE:

This section specifies coarse mechanical screening, conveyance and dewatering systems consisting of a mechanically-cleaned multi-rake type bar screens and corresponding shaftless-screw type conveyance/dewatering units. The screening system shall be designed for the collection, removal, and conveyance of coarse solids from raw sewage at a municipal wastewater treatment plant. The mechanically cleaned bar screen manufacturer shall have unit responsibility for providing all of the system components specified in this Section.

The mechanically cleaned bar screens shall consist of a frame, bar rack, deadplate, sprocket(s), chain, link guides/slides, rake assembly, scraper assembly, electric drive motor, gear reducer, anchor bolts, and all accessories and appurtenances specified, indicated on the Drawings or otherwise required for a complete and proper installation. Bar screens with UHMWPE link guides are preferred over stainless steel. Bar screens that do not have chain- or link- driven multiple rakes will not be accepted.

The conveyance/dewatering units supplied shall include drive units, flighting, troughs and liners, covers, supports, hoppers, discharge chutes, safety devices, all metal construction specified, and appurtenances required for a complete and operable.

The manufacturer shall review the mechanical and structural layout drawings to familiarize themselves with the location and the set-up of the equipment specified and shall assure themselves that the equipment specified is appropriate for and coordinated with what is shown on the Contract Drawings. The coarse screen system shall fit within and be fully functional under the physical, mechanical, and electrical constraints provided in the Contract Documents, including coordination with the proposed disposal dumpster. Manufacturer shall note the limited clearance between Screen SCN-2012 and the adjacent wall. System configuration shall provide adequate clearances for all required maintenance activities as recommended by the system manufacturers. The manufacturer shall also review the relevant electrical plan and one-line diagram and the relevant process and instrumentation diagram drawing to ensure that the contract drawings are appropriate and coordinated with the equipment and controls specified. Manufacturer shall also note the downstream flow control provisions as described in Paragraph 11121-1.01 D. 2. B. and make necessary adjustment recommendations to screen mounting floor elevation as required to satisfy criteria specified herein.

B. TYPE:

The mechanically cleaned bar screen shall be a vertical front-cleaned by multiple chain-driven articulated rake type assemblies. The screen will collect and remove solids from a liquid stream in a channel by means of cleaning a stationary bar rack with the multiple raking mechanisms. The multiple rakes shall engage the upstream side of the bar rack from the bottom of the channel and clean the face of the rack while elevating collected solids for removal and disposal above the top of the channel.

The screw-type dewatering system shall be the shaftless formed steel spiral type conveyor designed to convey municipal wastewater raw screenings collected from the discharge point of the coarse screen equipment. The conveyor shall be reversible for cleaning and dejamming. The conveyor shall be designed with the motor and drive unit located in a pushing mode with remote bearings at the drive end and a replaceable wear liner installed throughout the length of the trough providing support to the spiral screw.

C. EQUIPMENT LIST:

Item	Equipment No.
Coarse Influent Screen 1	SCN-2011
Coarse Influent Screen 2	SCN-2012
Coarse Screenings Dewatering Unit 1	CON-2011
Coarse Screenings Dewatering Unit 2	CON-2012

D. PERFORMANCE REQUIREMENTS:

1. GENERAL: Equipment furnished under this section shall be suitable for operation in wastewater containing gross waste solids, rags, vegetable parts, rocks, sand, silt, petroleum products, industrial solvents, animal fats, and oils. The wastewater will have a temperature of 45 degrees F to 80 degrees F and will have a pH which may range from 5 to 8.

2. BAR SCREENS:

a. FUNCTIONAL REQUIREMENTS: Bar racks shall be cleaned by a multiple chain driven rake tynes. The bar screen shall function in the following manner: The chain driven rake tynes shall scrape and carry the screenings from the channel up the upstream side of the screen to the specified elevation for discharge. After discharge, the rakes shall return to the bottom of the channel also on the upstream side of the screen. The screen system shall be designed for continuous or intermittent duty under the conditions specified in this Section.

b. OPERATING CONDITIONS: Mechanical bar screens shall be suitable for installation under the following conditions:

Equipment No.	SCN-2011, 2012
Peak flow per screen unit, mgd	7.5
Channel width, ft	2.5
Channel depth, ft[1]	20.5
Maximum upstream water elevation, ft[4]	872.75
Max. downstream water depth @ design flow, ft[4]	3.5
Maximum allowable headloss, inches[2]	16.0
Channel invert elevation[1]	867.75
Intermediate operating floor elevation[1]	876.00
Upper floor elevation[1]	888.00
Elevation of screenings discharge[3]	As Req'd
Elevation of discharge chute[3]	As Req'd
Angle from horizontal, degrees	80
Clear spacing between bars, mm	6
Bar width, upstream face, inches	0.25
Bar width, downstream face, inches, maximum	0.25
Maximum rake travel velocity, fpm	7.0
Motor horsepower, maximum	5.0
Motor type, reference Division 16	Explosion Proof
Removal efficiency or % capture rate	>90%

Notes:

1. Elevations and dimensions given are approximate; the Contractor shall verify elevations and dimensions prior to fabrication.

2. The maximum headloss is with a 30% blinding of the open area across the bar rack.

3. The Contractor shall cause the bar screen manufacturer to coordinate the screenings discharge elevation and discharge chute with the screenings removal equipment. The Contractor shall furnish the bar screen manufacturer with the dimensions of the proposed screenings dumpster to confirm screenings discharge elevation.

4. The water level downstream from the screens is regulated by a Parshall flume with a 12-inch throat width and invert elevation as shown on the Drawings (869.50 feet). Screen manufacturer shall recommend adjustment to the elevation of the floor upstream from the flume where the screens will be installed in order to provide suitable velocities upstream and downstream from the screen while satisfying the

specified criteria in the table above.

3. SCREW DEWATERING UNITS

a. GENERAL: The system components shall be designed and selected for continuous or intermittent duty while conveying the specified product in either the forward or the reverse direction. The screenings may contain quantities of wastewater, grit, hair, grease, plastic, rubber, industrial solvents, animal fats, and oils, rocks, bricks, wood, sticks, metal objects, glass, rags and gross waste solids.

b. FUNCTIONAL: The shaftless screw conveyor shall convey captured screenings to a nearby screenings bin.

The conveyor will be controlled by the facility's Master Control Panel, motor control center and local control stations. The conveyor will be activated once the mechanically screened bar screen is activated and will continue to run through the bar screen's operation. Once the bar screen stops, the conveyor will continue to run through a timer control for an adjustable period of time.

c. OPERATING CONDITIONS:

Screw type dewatering units shall be suitable for installation under the following conditions:

Equipment No.	CON-2011, 2012
Maximum capacity, cf/hr	150
Density, lbs/cf	60
Maximum solids concentration, % by dry weight	20
Approximate length[a], feet	26
Maximum screw speed, rpm	20
Maximum filling factor at maximum loading, percent	50
Minimum flight outside screw diameter[b] inches	14
Maximum drive horsepower[b]	5
Location of drives	Inlet
Motor type, reference Division 16	Explosion proof
Reversing screw	Yes
Maximum incline Angle, degrees	15
Discharge opening, in	12

1.02 QUALITY ASSURANCE

A. REFERENCES:

This section contains references to the following documents. They are a part of this section as specified and modified. Where a referenced document contains references to other standards, those documents are included as references under this section as if referenced directly. In the event of conflict between the requirements of this section and those of the listed documents, the requirements of this section shall prevail.

Unless otherwise specified, references to documents shall mean the documents in effect at the time of Advertisement for Bids or Invitation to Bid (or on the effective date of the Agreement if there were no Bids). If referenced documents have been discontinued by the issuing organization, references to those documents shall mean the replacement documents issued or otherwise identified by that organization or, if there are no replacement documents, the last version of the document before it was discontinued. Where document dates are given in the following listing, references to those documents shall mean the specific document version associated with that date, regardless of whether the document has been superseded by a version with a later date, discontinued or replaced.

Reference	Title
AFBMA 9	Load Ratings and Fatigue Life for Ball Bearings
AGMA 6010 E	Spur, Helical, Herringbone, and Bevel Enclosed Drives
AISI-85	Pocketbook of AISI Standard Steels
AISI C-1020	Carbon Steel
ASCE 7	Minimum Design Loads for Buildings and Other Structures
ASTM A123 A	Zinc (Hot-Dip Galvanized) Coatings on Iron and Steel Products
ASTM A153	Zinc Coating (Hot-Dip) on Iron and Steel Hardware
ASTM A276-91	Stainless Steel and Heat-Resisting Steel Bars and Shapes
ASTM A480/A480M	General Requirements for Flat-Rolled Stainless and Heat-Resisting Steel Plate, Sheet, and Strip
ASTM D4020	Ultra-high Molecular Weight (UHMW) Polyethylene Molding and Extrusion Materials
AWS-D1.1	Structural Welding Code--Steel
CEMA	Standard Number 300
JIC EMP-1	Electrical Standards for Mass Production Equipment

Reference	Title
NEMA ICS 2	Industrial Control Devices, Controllers and Assemblies
NFPA-70	National Fire Protection Association
UL	Underwriter's Laboratories, Inc. 1. Electrical Construction Materials Directory 2. UL-508 Industrial Control Equipment

B. FACTORY TESTING:

1. MECHANICALLY SCREENED BAR SCREENS: The bar screens shall be factory assembled and tested before being shipped. The Owner reserves the right to have a representative present during the factory testing. The Owner's representative shall be notified at least 8 weeks prior to the estimated test date. The Contractor shall be responsible for the cost of all of the Owner's representative visit associated with this component. Testing shall include a simulation of a fixed bar screen obstruction by a large heavy solid and by wet cloth like material that has blinded a large portion of the screens. The rake tynes will operate to clear the obstruction. If the machine fails the test, then the manufacturer will have to provide in a letter report in writing the cause of the failure and how it will be fixed. The Owner's representatives also reserves the right to attend any subsequent factory testing.

2. SHAFTLESS SCREW DEWATERING UNITS: The conveyors shall be assembled at the shop and tested for at least 1 hour prior to shipment. The Owner reserves the right to have a representative present during the factory testing. The Owner's representative shall be notified at least 8 weeks prior to the estimated test date. The Contractor shall be responsible for the cost of all of the Owner's representative visit associated with this component. Testing shall include a simulation of the conveyance of wet cloth like material as well as a large heavy object. If the machine fails the test, then the manufacturer will have to provide in a letter report in writing the cause of the failure and how it will be fixed. The Owner's representatives also reserves the right to attend any subsequent factory testing

C. MANUFACTURER'S EXPERIENCE:

The manufacturer for each system shall have equipment of this design and of comparable capacity in operation for at least 5 years. During this operating period, equipment shall have operated with no more than 12 days down time and total maintenance costs shall not have exceeded 10 percent of the screen's undelivered and uninstalled cost. The manufacturer shall guarantee that the equipment performs as specified for a period of 1 year from the date of start-up. If during this period, the equipment fails to perform, then the failure shall be remedied by the manufacturer at no cost to the Owner.

D. UNIT RESPONSIBILITY:

The Contractor shall assign unit responsibility as specified in paragraph 11000-1.02 C to the screen manufacturer for the equipment specified in this section. A certificate of unit responsibility shall be provided.

E. SHIPMENT, PROTECTION AND STORAGE:

Equipment shipment, protection and storage shall conform to the requirements specified in Section 01605.

1.03 ENVIRONMENTAL CONDITIONS

Equipment shall be installed indoors in the proposed treatment building at a wastewater treatment plant that is approximately 890 feet above sea level. Refer to Section 01800 for additional environmental conditions. At the location shown on the Drawings, the screens and associated dewatering units will be located in a Class 1 Division 2 environment. All equipment provided under this specification shall be rated for this environment in accordance with NFPA 820.

1.04 SUBMITTALS

The following information shall be provided in accordance with Section 01300:

1. A copy of this specification section, with addendum updates included, and all referenced and applicable sections, with addendum updates included, with each paragraph check-marked to indicate specification compliance or marked to indicate requested deviations from specification requirements. Check marks **(✓)** shall denote full compliance with a paragraph as a whole. If deviations from the specifications are indicated, and therefore requested by the Contractor, each deviation shall be underlined and denoted by a number in the margin to the right of the identified paragraph, referenced to a detailed written explanation of the reasons for requesting the deviation. The Engineer shall be the final authority for determining acceptability of requested deviations. The remaining portions of the paragraph not underlined will signify compliance on the part of the Contractor with the specifications. *Failure to include a copy of the marked-up specification sections, along with justification(s) for any requested deviations to the specification requirements, with the submittal shall be sufficient cause for rejection of the entire submittal with no further consideration.*

2. A copy of the contract document control diagrams and process and instrumentation diagrams relating to the submitted equipment, with addendum updates that apply to the equipment in this section, marked to show specific changes necessary for the equipment proposed in the submittal. If no changes are required, the drawing or drawings shall be marked *"no changes required"*. Failure to include copies of the relevant drawings with the submittal shall be cause for rejection of the entire submittal with no further review.

3. Certificate of Unit Responsibility attesting that the Contractor has assigned, and that the manufacturer accepts, unit responsibility in accordance with the requirements of this Section and paragraph 11000-1.02 C. No other submittal material will be reviewed until the certificate has been received and found to be in conformance with these requirements.

4. Experience statement specified in paragraph 11121-1.02 C with list of installations.

5. Electrical elementary diagrams, internal connection diagrams, and external interconnection diagrams, drawn in accordance with JIC and/or ICS standards. Connection diagrams shall be the conventional type with lines showing point-to-point wiring and must show terminals and devices as viewed by the electrician; wireless or wire schedule types are not acceptable.

6. Catalog data on all ancillary electrical components, including limit switches.

7. Motor data as specified in paragraph 11060-1.03.

8. Electromechanical disc brake catalog data that confirms the unit's explosion proof service rating.

9. Gear reduction unit catalog data indicating the unit's AGMA service classification and service factor.

10. Listing of screen components and materials.

11. Dimensional drawings including location of all piping, electrical, instrumentation, water supply, and structural connections. Drawings shall specifically include the proposed screening dumpster and associated clearances to confirm coordination. Drawings shall also show clearances from adjacent walls and other structural elements to confirm clearances for maintenance requirements and general access.

12. Certification of anchor system calculations specified in this specification.

13. Cleaning rake details indicating the shelf depth and penetration depth into the rack during the cleaning operation.

14. Listing of system components and materials.

15. Statements from screen and dewatering unit manufacturers that motor protection relays and associated field setting provided by the Contractor (per Specification Section 16920) have been reviewed and are acceptable for the proposed equipment.

16. Statements from screen and dewatering unit manufacturers that motor control strategies specified in Specification Section 17900 have been reviewed and are acceptable for the proposed equipment.

17. Operations and maintenance (O&M) manuals shall be provided in accordance with Section 01730.

PART 2 – PRODUCTS

2.01 BAR SCREENS

A. MANUFACTURERS:

The Owner and Engineer believe the following candidate manufacturers are capable of producing screens that will satisfy the requirements of this Section. This statement, however, shall not be construed as an endorsement of a particular manufacturer's products, nor shall it be construed that named manufacturers' standard equipment or products will comply with the requirements of this Section. Candidate manufacturers (and products) for the mechanical bar screens include Duperon (FlexRake), HydroDyne (Triden Multi-Rake), WesTech (CleanFlo MRS), Huber Rakemax, Kruger, or approved equal.

B. MATERIALS:

Materials of construction for the mechanically cleaned bar screen shall be as follows:

Component	Material
Bar rack	AISI, Type 304L stainless steel
Deadplate	AISI, Type 304L stainless steel
Discharge chute	AISI, Type 304L stainless steel
Rake Tynes	AISI, Type 304L stainless steel
Rake Wiper Plate	AISI, Type 304 L stainless steel and polyurethane
Side frames	AISI, Type 304 stainless steel
Fasteners and miscellaneous hardware	AISI, Type 316 stainless steel
Sprockets	AISI, Type 304 stainless steel
Rake Chain/Linkage System	AISI, Type 304 or 403 stainless steel
Link Guides/Slides	UHMWPE
Upper Shaft	Solids stainless steel; or Carbon steel, cold rolled, solid or steel pipe, ASTM A53, Schedule 40 minimum

Materials specified are considered the minimum acceptable for the purposes of durability, strength, and resistance to erosion and corrosion. The Contractor may propose alternative materials for the purpose of providing greater strength or to meet required stress limitations. However, alternative materials must provide at least the same qualities as those specified for the purpose.

Carbon steel tools (brushes, grinders, etc) shall not be used on any stainless steel components.

C. EQUIPMENT:

1. GENERAL: The design of the screen shall direct all flow to the bar rack area. Where the screen side frames are located in the flow channel, diverter/filler plates or other devices shall be utilized. Alternatively, side frames may be located in blocked-out areas within the side of the channel walls above high water level. Except for the bottom bar rack anchoring bolts, bar rack supports, and grouted in-place frame, all structural supports and fasteners shall be above the channel walls.

2. WELDING: All welding shall conform to AWS-D1. Weld splatter shall be prevented by the use of splatter-prevention paste at welded joints. Weld slag shall be removed. After welding operations, stainless steel components shall be cleaned of organic contamination using a solvent that is free of chlorides. After organic materials have been removed, embedded iron shall be removed from the stainless steel by pickling with nitric or hydrofluoric acid. Welded ferrous or steel components shall be provided with continuous seal welds between full penetration skip welds or sealed with a paintable silicone caulk.

3. BAR RACK AND DEADPLATE: Bar racks shall extend to the top of each channel at an angle from the horizontal as specified in paragraph 11121-1.01 E. Bar shape shall be a regular trapezoid or tear-drop. Parallel faces of the trapezoid shall be perpendicular to the flow, with the wider parallel face (where provided) on the upstream side of each bar. Bars shall be manufactured from solid stock. Bars fabricated to shape by welding shall not be allowed. Bar dimensions shall be sized in accordance with paragraph 11121-1.01 F.1. Bar racks shall be provided with stiffener bars located on the downstream side of the bar rack as required to prevent deflection of each bar from its original true vertical alignment.

The top of the bar rack shall be attached to the deadplate. Deadplates shall be suitably reinforced to withstand loads exerted by the raking operation and shall have a minimum thickness of 3/16 inch. Deadplates shall extend from the top of the bar rack to the discharge point.

4. DISCHARGE CHUTE: Each screen shall be provided with a discharge chute connected to the dead plate to direct screenings directly into one of two shaftless screw dewatering units as sown on the Drawings. Discharge chutes shall be 3/16 inch minimum thickness, suitably reinforced to withstand impacts from all materials removed by the rake mechanism, providing a totally enclosed conduit. The design of the diverter chute shall include an internal diversion gate mechanism with manual operator located outside of the enclosed chute unit to divert screens to either of the shaftless screw dewatering units. The design of discharge chutes shall be coordinated with the screenings removal equipment and include one or more access doors for inspection and access to the screw conveyor.

5. SIDE FRAMES: Side frames shall provide an unobstructed path for the rack cleaning mechanism. Side frames shall be 1/4-inch minimum thickness, suitably reinforced to support all loads. Side frame width shall be no less than 18 inches. The side frame shall be securely attached to the top of the concrete channel by means of a base frame made of rolled structural steel shapes with a minimum thickness of 1/4-inch.

6. CHAIN/LINKAGE AND GUIDE SYSTEMS: For screens with front-clean/rear-return raking mechanisms, the chain and rake assembly shall consist of heavy duty 304L stainless steel links connected in parallel and separated by UHMWPE guide links or Chains shall be heavy duty roller type fabricated from 304 stainless steel. The minimum chain

breaking load is 112kN. Chain rollers shall be 304 stainless steel with 60mm diameter, rollers of polyamide or other non-metallic material shall not be allowed. Chain pins and bushings shall be hardened stainless steel 420. Chains do not require lubrication. The rakes shall be bolted to the stainless chain link and be easily replaceable/removable. Each stainless steel link shall be fabricated from minimum 1/4 inch stainless steel.

The chain/link system shall form a continuous belt that will rotate around a guide system integral to the screen frame. Tensioning mechanisms for the chain/link system shall be easily accessible from the area of the drive mechanism. The design of the screening system shall also include a sealing mechanism to prevent the accumulation of debris, intrusion of grit particles and damage to guide links.

For screens with front-clean/front-return raking mechanisms, the link system shall be 304L stainless steel castings, retaining rings and pins with a minimum ultimate strength of 60,000 lbs or chains of heavy duty roller type fabricated from 304 stainless steel with a minimum chain breaking load of 112kN. Chain rollers shall be 304 stainless steel with 60mm diameter. Chain pins and bushings shall be hardened stainless steel 420. The screen design shall incorporate a 304L stainless steel return guide/closeout system to assure proper alignment of linkage system and attached scrapers as they enter the bar screen. The return guide/closeout system shall eliminate from the flow path any screen opening wider than the specified bar spacing.

7. RAKING SYSTEM: Cleaning rake/scraper mechanisms shall be constructed of reinforced 304L stainless steel plate and shall have teeth suitably shaped to effectively clean the front and interior faces of the bar rack. The rakes shall be formed from 3/8-inch minimum plate section to form a shelf of sufficient depth to provide adequate stiffness for the specified duty and carry collected solids to the discharge point.

The number and spacing of raking mechanisms shall be as recommended by the manufacturer for the specified service conditions. The raking mechanism may include additional staging scraper assemblies (if required by the manufacturer - without cleaning teeth) spaced between the regular raking mechanisms; however, the maximum ratio of staging to regular scrapers shall be no more than 2:1.

A wiper assembly shall be provided to assist in the removal of debris from the raking mechanism that is not removed by gravity. The wiper system shall contact each rake as it is lifted up to the discharge location. The wipers shall scrape any solids remaining on the rakes and automatically reset position for the next rake. Wiper assemblies requiring separate drive systems shall not be accepted.

8. DRIVE UNIT AND MOTOR: Each screen unit shall operate independently and shall have its own drive unit and driven components. The motor shall drive the upper sprockets to rotate the chain/linkage and raking systems. The chain and rake assembly will be supported and rotated around heavy duty stainless steel drive sprockets located on the drive shaft in the head space of the screen. All machined and fabricated drive components shall be 304L stainless steel.

Gearbox shall be shaft-mounted, right angle type and include spiral bevel gearing. The output shaft speed shall be controlled by a vector type inverter, or per rake manufacturer's recommendation, with a 1.5 or greater service factor based on machine torque requirements.

The gearbox shall not be vented to the outside atmosphere. All components of the motor and drive unit system shall be rated for continuous duty capable of at least 15 start-stop cycles per hour. To provide overload protection and prevent motor damage, thermostats shall be placed in the motor windings.

Drive motors shall be inverter-duty rated, Type 3 (explosion proof) motors as specified in Section 11060. Motors shall be 1,800 rpm maximum and suitable for 460 volt, 3-phase power supply. The motor will be located outside of the screen covers and above the top of the channel for easy access from operating floor as shown on the Drawings.

2.02 SCREENING DEWATERING UNIT

A. ACCEPTABLE MANUFACTURERS

The Owner and Engineer believe the following candidate manufacturers are capable of producing screens that will satisfy the requirements of this Section. This statement, however, shall not be construed as an endorsement of a particular manufacturer's products, nor shall it be construed that named manufacturers' standard equipment or products will comply with the requirements of this Section. Candidate manufacturers (and products) include Jim Meyers, Spirac, WesTech, or approved equal.

B MATERIALS

Materials of construction for the shaftless screw dewatering unit shall be as follows:

Component	Material
Chutes and sidewall splash plates	AISI, Type 304 Stainless Steel
Trough, end plates, lids, and drive	AISI, Type 304 Stainless Steel
Hoppers	AISI, Type 304 Stainless Steel
Supports, Brackets	AISI, Type 304 Stainless Steel
Guards	AISI, Type 304 Stainless Steel
Flight screw and spiral insert	High Strength Alloy Carbon Steel with minimum hardness of 250 Brinnell, 80,000 psi tensile strength minimum
Wear liner	UHMW PE
Gaskets	Neoprene
All nuts, bolts, washers, fasteners	AISI, Type 316 Stainless Steel
Conveyor Enclosure	AISI, Type 304 L stainless steel

Materials specified are considered the minimum acceptable for the purposes of durability, strength, and resistance to erosion and corrosion. The Contractor may propose alternative materials for the purpose of providing greater strength or to meet required stress limitations. However, alternative materials must provide at least the same qualities as those specified for the purpose.

C. GENERAL REQUIREMMENTS:

Each dewatering unit shall be mounted in accordance with local building code requirements for seismic and other required loading conditions. Manufacturer shall provide certification that calculations have been performed and signed by a registered structural or civil engineer confirming that the anchorage system is within allowable shear and tension limits and that the anchor embedment is adequate. The dewatering unit shall be designed and built to withstand maximum static hydraulic forces exerted by the liquid to the screen. All structural and functional parts shall be sized to prevent deflections or vibrations that may impair the conveying and pressing operations.

All parts furnished shall be amply designed and constructed for the maximum stresses occurring during fabrication, transportation, erection and continuous operation. All welding shall conform to AWS-D1.1. Weld splatter shall be prevented by the use of splatter-prevention paste at welded joints. Weld slag shall be removed. After welding operations, stainless steel components solvent that is free of chlorides. After organic materials have been removed, embedded iron shall be removed from the stainless steel by pickling with nitric or hydrofluoric acid. Sandblasting, bead blasting, or grit blasting of stainless steel surfaces shall not be allowed in lieu of the acid passivation. Welded ferrous or steel components shall be provided with continuous seal welds between full penetration skip welds or sealed with a paintable silicone caulk.

D. SHAFTLESS SCREW

The spiral shall be of the shaftless screw type with spiral insert, constructed of multiple concentric flights formed continuously from bar stock and welded together to form a spiral. The spacing, size and pitch of the flights shall be as required to provide the specified performance. Spiral flighting shall be formed in sections from one continuous flat bar and shall be concentric to within 2mm. Sectional flighting formed from plate shall not be permitted.

The spiral flights shall be designed with the stability to prevent distortion and jumping in the trough. The torsional rating of the spiral shall be such that, at 250% of the motor nameplate horsepower, the drive unit cannot produce more torque than the torsional rating of the flighting, and that the "spring effect" of the spiral shall not exceed 0.08 inches per feet of length at maximum load conditions.

Spiral flighting shall have full penetration welds at all splice connections. The flights shall be aligned to assure true alignment when assembled in the field and shall be made in accordance with the manufacturer's requirements. The spiral flights shall be coupled to the end shaft by a flanged, bolted connection. A gland packing ring consisting of two Teflon fiber packing rings shall seal the drive shaft at its penetration through the end plate

The connection of the spiral to the drive system shall be through a flanged connection plate that is welded to the spiral forming a smooth and continuous transformation from the flange plate to the spiral. The drive shaft shall have a mating flange and shall be bolted to the spiral connection plate. Additionally, a grease lubricated labyrinth seal shall be shaft mounted internally in the conveyor between the back plate and spiral coupling connection.

At the drain end of the unit, the spiral shall be fitted with a water-resistant brush which shall clean the 6mm perforated screen openings and be secured with stainless steel fasteners or welding. At the drive end of the spiral, the drive shaft of the gear motor shall be welded directly to the spiral.

E. TROUGH AND SUPPORTS

The dewatering unit trough will be inclined to direct liquid to a collection area at the lower, motor end of the unit. The trough shall conform to CEMA Standards and shall be constructed of minimum 11-gauge Type 304L stainless steel. The trough length and incline shall be as necessary to deposit dewatered screenings into the corresponding dumpster from the Coarse Screen discharge chutes as shown in the Drawings. The trough will be lined with a minimum 3/8-inch thick UHMW polyethylene sheet. The liner shall be removable in sections (4 feet maximum), held in place without penetrations or fasteners through trough, and replaceable.

Stiffeners shall be placed across the top of the trough and fastened to both sides of the trough to maintain trough shape. The troughs shall be constructed in flanged sections with a neoprene or rubber gasket provided at each trough flange and between trough top and covers. The entire trough including compaction area shall be provided with covers to provide a completely enclosed system. The covers shall include multiple access hatches spaced as necessary to provide access to all internal components.

The entire unit will be supported by support legs attached to the trough assembly. The support legs shall be designed to support all operating and seismic loads specified herein with heights as appropriate to achieve specified inclination and discharge elevations specified. The supports shall be designed to avoid interference with other equipment or equipment supports. Support legs shall be mounted directly to concrete housekeeping pads or piers as shown in the Drawings.

All structural supporting members shall be designed such that the ratio of the unbraced length to least radius of gyration (slenderness ratio) shall not exceed 120 for any compression member and shall not exceed 240 for any tension member. In addition, all structural members and connections shall be designed so that the unit stresses will not exceed the American Institute of Steel Construction allowable stresses by more than 1/3 when subject to loading of twice the maximum design operating torque of the spiral conveyor drive motors

F. LOWER TROUGH DRAINAGE AREA

Free liquid from the screening material will drain through a screen located at the lower, drive end of the trough unit. The screen will consist of a 6mm perforated plate, conforming to the trough geometry and cleaned by brushes attached to the spiral. A collection area will be provided below the screen with a minimum 3-inch drain pipe connection to remove liquid accumulated. Contractor shall route drain pipe to building process drain system as shown on the Drawings.

G. INLET HOPPER AND TRANSITION CHUTE

A vertical fabricated discharge chute shall be provided to direct screenings from the discharge connection of the influent Coarse Screen to the feed hopper of the dewatering unit

trough as described in paragraph 11121-2.01. The chute shall provide a totally enclosed pathway between the Coarse Screen discharge and dewatering unit hopper.

H. COMPACTION ZONE AND DISCHARGE

Each dewatering unit shall include of a compaction at the discharge end of the screw consisting of a press plate/shutter assembly, screen and collection area and spray wash system.

1. PRESS PLATE/SHUTTER ASSEMBLY. The discharge end of the spiral shall include a weighted or spring-controlled discharge plate that shall impart resistance to the passage of screenings to compact and dewater the screened material. The force of compaction shall create a plug of dewatered material that will be deposited by gravity into a collection dumpster directly below. The assembly shall permit the amount of resistance/tension applied to the plate to be adjusted manually.

2. SCREEN AND COLLECTION AREA. Similar to the lower drainage area, the compaction zone shall include a wedge wire screen extending the entire length of the compaction zone and associated drainage collection area. A hinged top cover shall be provided in this area to provide easy access for cleaning. Drainage from this area shall be piped primary unit drain at the lower drain collection area.

3. SPRAY WASH SYSTEM. As required, a spray wash system to flush screenings residue from the drain area and/or press zone shall be provided consisting of a spray header and solenoid valve (separate for each system). Spray headers will have multiple openings sized as appropriate to effectively clean the wedge wire screen area. The system will have a maximum water requirement of no more than 10 GPM at 80 psig. A ¾-inch NPT spray water connection shall be provided to connect to the plant water (3W) supply. Solenoid and pressure reducing valves for the spray wash system shall be provided, as required, by the dewatering unit equipment manufacturer, and shall conform to the requirements of Specification Sections 15147 and 15153, respectively.

I. DRIVE UNIT AND MOTOR:

The drive system shall consist of a motor, gear reducer and drive shaft. The drive shaft will shall be direct coupled to the spiral and be constructed of prime coated AISI 1045 carbon steel. The motor shall connect to the drive shaft via a shaft-mounted gear reducer. Gear reducer shall be parallel helical type gear reducer with a direct coupled connection to the motor and rated for continuous duty in accordance with AGMA Standards. The service factor rating shall be 1.5. Electric motors shall be Type 3 explosion proof motors in accordance with Section 11060.

Each motor shall be driven by a constant speed motor starter (per Section 16155) provided by others and located in the Electrical Room Motor Control Center as shown on the Drawings. Overload protection shall be provided through current monitoring in the event of blockage or jamming.

J. BAGGING SYSTEM

The screenings dewatering unit shall include an integral bagging system. The bagging system shall consist of an AISI 304 stainless steel bag holder that shall mount on the discharge of the dewatering unit. The holder shall be readily removable for inspection and service. The holder shall provide for a consumable high strength bio-degradable polyethylene tube/bag to receive screenings directly from the compactor. The system shall allow for direct screenings storage in a variable capacity system.

2.03 ELECTRICAL EQUIPMENT AND CONTROLS

A. GENERAL:

All electrical components located within the envelope of the mechanical bar screen system shall be suitable for a Class I Division 2 environment as defined by NFPA. Junction boxes, limit switches, and other electrical devices shall be provided with NEMA 7 enclosures and located according to NFPA requirements.

B. LOCAL SCREEN CONTROL STATION:

Each screen shall be provided with a local control station consisting of the following components:

1. Hand/Off/Auto switch
2. Forward/Off/Reverse switch with spring return from Reverse to Off
3. Emergency stop

C. LOCAL CONVEYOR DEVICES:

Each conveyor shall be furnished with a pull cord emergency stop switch. The cord shall run the full length of each conveyor. The trip switch shall immediately stop all conveyors when the switch is actuated.

A zero speed switch shall also be provided. The switch shall be mounted on the side of the conveyor U-trough with a stainless steel bracket. The switch shall be the non-contacting type, utilizing magnetic sensors.

Each conveyor shall be provided with a local control station consisting of the following components:

1. Hand/Off/Auto switch
2. Forward/Off/Reverse switch with spring return from Reverse to Off

D. SYSTEM CONTROLS

Each screen and dewatering unit shall be capable of both manual and automatic operation. No local control panels shall be provided for either screen or dewatering unit. The equipment shall be controlled via the plant control system in accordance with the Control Strategy specified in Section 17900. The screen and dewatering unit manufacturer shall review the control strategy to verify that is suitable for the proposed equipment.

In general, when operating automatically, the screens and dewatering units shall be operated independently by the plant control system as follows:

1. Each screen, when placed into automatic operation, shall operate based upon differential level in the upstream raw sewage influent channel through an interface with the plant control system. The plant control system shall include multiple differential set points used for automatic speed ramping/reducing as the differential level increases/decreases. The uppermost set point shall run the rake at high speed. The logic shall also include a “Rake Off” set point which shall be lower than the initial run set point.

2. Each dewatering unit, when placed into automatic operation, shall run whenever either screen is operating. When all screens stop running, a timer shall cause the dewatering unit to continue running for a set time to clear the dewatering unit of all screenings prior to shutting down.

3. The spray wash system(s) for each dewatering unit shall operate intermittently on timers whenever a screen operates.

Manual operation of both screens and dewatering units shall be performed locally at the respective control station.

E. MOTOR PROTECTION

Motor protection relays shall be provided separately by the Contractor as part of the proposed motor control center (MCC) system per Specification Section 16920. Screen manufacturer shall coordinate with Contractor as required to review motor protection relays provided by the MCC supplier and associated field settings to confirm that they are adequate for the proposed coarse screening equipment.

2.04 FINISHES

Stainless steel components shall be provided with an ASTM A480, No. 1 finish. Ferrous or steel components shall be coated in accordance with Section 09900.

2.05 SPARE PARTS

The following spare parts shall be provided for each mechanically cleaned bar screen supplied, as applicable and recommended by the manufacturer:

- One drive clevis pin
- Ten snap/retaining rings
- Four link clevis pin
- Four scraper bolts and nuts
- One UHMWPE wiper blade
- One rake
- 5-year supply of lubrication required for maintaining all bar screen components.

The following spare parts shall be provided for the shaftless screw conveyor:

- 1 set shaft seals
- 30 linear feet of liner material
- 1 speed sensor (Motion detector)

Spare parts shall be tagged and stored as specified in paragraph 11000-2.12.

2.06 PRODUCT DATA

The following product data shall be provided in accordance with Section 01300:

1. Motor data as specified in Division 16

2. Range and setting of indicators, instruments, timers, and other related devices.

3. Operating and maintenance information as specified in Section 01730.

4. Installation details and instructions.

5. Installation Certification Form 11000-A as specified in paragraph 11121-3.01

6. Training Certification From 11000-B as specified in paragraph 11121-3.02

PART 3 – EXECUTION

3.01 INSTALLATION

The manufacturer(s) for the screens and dewatering units shall provide factory trained personnel to supervise installation, adjustment, field testing, and initial operation of all components of the system. Equipment shall be aligned, connected, and installed at the locations shown and in accordance with the manufacturer's recommendations. All conduits entering local control panels or control stations shall be sealed with a gastight sealant. The conveyor manufacturer shall provide an installation certification Form 11000-A specified in Section 01999.

3.02 OPERATOR TRAINING

The screen supplier (and dewatering unit supplier, if different) shall provide two 4-hour instruction sessions conforming to the requirements specified in Section 01664 and in this Section 11121. The training session shall cover the combined screen and dewatering unit system and include preventive maintenance requirements, overhaul and troubleshooting instructions, and normal operating practices. The screen and dewatering unit suppliers (if different) shall each provide instruction certification Form 11000-B specified Section 01999.

3.03 TESTING

A. GENERAL:

Testing shall conform to the requirements specified in Section 01660 and those specified in this Section 11121. The following operational tests shall be performed in the sequence specified. Failure to pass a given test shall prevent commencement of the subsequent test. Should the screen or conveyor fail to meet any of the testing requirements, it shall be the Contractor's responsibility to replace the unit with a suitable, heavier-duty machine conforming to the specifications.

B. TEST 1:

Following installation, the Contractor shall conduct a performance test to verify the lifting capacity of each bar screen. For 20 consecutive cycles, each machine shall be operated with an imposed load of 100 pounds per foot of channel width. The load shall be lifted from the channel bottom to a point immediately above the upper level operating floor slab. The screen shall then be stopped and the load will be lowered once again to the channel floor. This procedure shall be repeated for 20 cycles, during which time the structural support members shall be checked for deflection or evidence of wear or stress to screen components which could impair operation. Operating speed shall be verified and the unit checked for any misalignment. Channel shall be isolated and completely drained prior to and during this test. Bar rack may be wet down, at Contractor's option, but channel shall remain dry.

C. TEST 2:

After successful completion of Test 1, the Contractor shall conduct a test to verify proper overload protection setting for each screen and conveyor. An obstruction sufficient to cause an overload condition shall be affixed to the screen and the conveyor. Motor shall be started and operated until overtorque causes motor shutdown and alarm as specified in paragraph 11121-2.01 C.8. Channel shall be isolated and completely drained prior to and during this test.

D. TEST 3:

After successful completion of Tests 1 and 2, supplier shall conduct a test to verify the bar rack design requirements, as specified in paragraph 11121-1.01 D. Channel shall be isolated and drained prior to testing procedure. A plastic tarp or other watertight cover shall be attached to upstream side of the bar rack. Channel shall then be filled with water to the maximum upstream water depth, as specified in paragraph 11121-1.01 D. The channel shall be pumped, downstream of the bar rack only, until differential specified in paragraph 11121-1.01 F is reached. Differential shall remain for two hours. Channel shall then be drained and bar rack inspected to ensure compliance with this specification section.

END OF SECTION

SECTION 11128

ROTATING DRUM SCREENS AND DEWATERING UNITS FOR FINE SCREENING APPLICATIONS

PART 1--GENERAL

1.01 DESCRIPTION

A. SCOPE:

This section specifies fine mechanical screening, conveyance and dewatering systems, each consisting of a rotary drum type screen unit and corresponding shaftless-screw type conveyance/dewatering unit. The screening system shall be designed for the collection, removal, and conveyance of fine solids at a municipal wastewater treatment plant that have passed through initial coarse screening (see Spec Section 11121) and vortex grit removal (see Spec Section 11148). The rotary drum screen manufacturer shall have unit responsibility for providing all of the system components specified in this Section.

The rotary drum screens shall consist of a screen cylinder, inlet pipe, cover and support structure, base frame, spray wash system, drive system, and all necessary appurtenances to provide complete a mechanical screening removal system.

The conveyance/dewatering units supplied shall include drive units, flighting, troughs and liners, covers, supports, hoppers, discharge chutes, safety devices, all metal construction specified, and appurtenances required for a complete and operable.

Each system (screen and dewatering unit combination) shall be controlled from a single, vendor-supplied local control panel as specified herein.

The manufacturer shall review the mechanical and structural layout drawings to familiarize themselves with the location and the set-up of the equipment specified and shall assure themselves that the equipment specified is appropriate for and coordinated with what is shown on the contract drawings. The manufacturer shall also review the relevant electrical plan and one-line diagram and the relevant process and instrumentation diagram drawing to ensure that the contract drawings are appropriate and coordinated with the equipment and controls specified. Specific attention shall be given to coordinating the configuration with of the proposed equipment with the proposed screenings dumpsters in order to provide the necessary clearances around the dumpster which must be located inside the building. The cost of any and all structural modifications required to accommodate the proposed screen shall be the responsibility of the Contractor.

B. TYPE:

Each drum screen shall be of the horizontal or angled rotating drum type designed to receive either pumped or gravity flow and discharge flow vertically into a receiving header via a collection tub integral with the bottom on the screen unit. Screenings will be transported

horizontally by the rotation mechanism of the screen to one end of the unit where it will be transferred via a connecting chute to the dewatering screw unit.

The screw-type dewatering system shall be the shaftless formed steel spiral type conveyor designed to convey municipal wastewater raw screenings collected from the discharge point of the coarse screen equipment. The conveyor shall be reversible for cleaning and dejamming. The conveyor shall be designed with the motor and drive unit located in a pushing mode with remote bearings at the drive end and a replaceable wear liner installed throughout the length of the trough providing support to the spiral screw. A compaction zone at the discharge end of the screw shall provide for dewatering of the collected screenings.

C. EQUIPMENT LIST:

Item	Equipment No.
Fine Screen 1	SCN-2041
Fine Screen 1 Dewatering Screw	CON-2041
Fine Screen 1 Control Panel	VCP-2041
Fine Screen 2	SCN-2042
Fine Screen 2 Dewatering Screw	CON-2042
Fine Screen 2 Control Panel	VCP-2042
Fine Screen 3	SCN-2043
Fine Screen 3 Dewatering Screw	CON-2043
Fine Screen 3 Control Panel	VCP-2043

D. PERFORMANCE REQUIREMENTS:

The rotary screen equipment to be provided under this section will be installed outdoors atop a new headworks structure to be constructed under this project at the Little River Water Reclamation Facility in Fulton County, Georgia. The dewatering screw unit shall be installed indoors inside the new headworks structure in a Class I Division II area as defined by NFPA 820. The equipment shall be suitable for continuous operation under the environmental conditions specified in Section 01800. The wastewater will have a temperature of 55 degrees F to 85 degrees F and will have a pH which may range from 6 to 9.

Periodically, the Owner may use the pumping equipment in the upstream influent pump station to pump down the wet well to remove accumulated debris and solids. Screens shall be capable of accommodating the increased solids loading associated with this condition.

E. OPERATION REQUIREMENTS:

Each rotary drum screen shall be suitable for installation under the following conditions:

Operating condition	Value
Peak flow, mgd	6.5
Maximum inlet pipe, inch	24
Influent Velocity, fps	<5
Maximum Influent TSS, mg/L	300
Screening basket diameter, inch	67
Screen openings, mm	1
Cylinder Speed, rpm	6
Maximum drive motor hp	1.5
Motor Speed, rpm	1,800
Minimum screen capture efficiency, %	85
Wet screenings solid content, %	8

The physical dimensions of the screening shall fit within the constraints shown in the Drawings including the following height criteria:

Physical Constraints	Value
Influent pipe crown elevation[1]	907.00
Floor (mounting) elevation[2]	903.67

Notes:

1. The water levels in the channels upstream from the screens have been calculated based on a screen influent tub distribution weir elevation at approximately the pipe crown elevation listed. The mounting elevation for the screen shall be adjusted to achieve this maximum weir elevation. See note 2.
2. Screens shall be floor mounted without the need for support legs as shown on the Drawings. A concrete curb shall be provided (height as required) for mounting the screen frame to achieve influent pipe crown elevation listed above.

Screw type dewatering units shall be suitable for installation under the following conditions:

Parameters	Value
Maximum capacity, cf/hr	75
Density, lb/cf	60
Maximum solids concentration, % by dry weight	20
Approximate length, feet	12
Maximum screw speed, rpm	20
Maximum filling factor at maximum loading, percent	50
Minimum flight outside screw diameter inches	14
Minimum spiral weight, lb/ft	20
Minimum trough width, inches	12
Maximum drive horsepower	5
Location of drives	Inlet
Motor type, reference Division 16	Explosion proof
Reversing screw	Yes
Incline Angle, approximate, degrees	5 to 15
Minimum discharge opening, inch	12

1.02 QUALITY ASSURANCE

A. EQUIPMENT MANUFACTURER'S QUALIFICATIONS:

The manufacturer of equipment provided by the BIDDER shall have been regularly engaged in the manufacture of wastewater treatment equipment of the type specified for a period of not less than five years. The screen manufacturer shall have 10 years design and manufacturing experience with internally-fed rotating drum screens and five (5) years of satisfactory operations.

The BIDDER shall submit with the Bid at the time of the Bid opening, a certification, signed by an officer of the equipment manufacturer, attesting that the equipment manufacturer's qualifications are in accordance with the requirements of paragraph 11128-1.02 A.

The BIDDER shall submit with the Bid at the time of the Bid opening, a list of no less than fifteen (15) similar units installed within the US as screening devices in similar applications. The list shall include the owner's name and address, and the name and telephone number of the owner's representative.

B. REFERENCES:

This section contains references to the following documents. They are a part of this section as specified and modified. In case of conflict between the requirements of this section and those of the listed documents, the requirements of this section shall prevail.

Reference	Title
AGMA 6010 E-88	Spur, Helical, Herringbone, and Bevel Enclosed Drives
AISI-85	Pocketbook of AISI Standard Steels
AISI-58.1-82	Minimum Design Loads for Buildings and Other Structures
ASTM A123-89	Zinc (Hot-Dip Galvanized) Castings on Iron and Steel Products
ASTM A153-82	Zinc Coating (Hot Dip) on Iron and Steel Hardware
ASTM A480/ A480M-90	General Requirements for Flat-Rolled Stainless and Heat-Resisting Steel Plate, Sheet, and Strip
AWS-D1.1-90	Structural Welding Code--Steel
JIC EMP-1-67	Electrical Standards for Mass Production Equipment
NEMA ICS 2-88	Industrial Control Devices, Controllers and Assemblies UBC Uniform Building Code, current edition
AFBMA 9-90	Load Ratings and Fatigue Life for Ball Bearings
AFBMA 11-90	Load Ratings and Fatigue Life for Roller Bearings
IEEE 112-1984	Polyphase Induction Motors and Generators
IEEE 519-1992	Harmonic Control in Electrical Power Systems
NEMA ICS 2-88	Industrial Control Devices, Controllers and Assemblies
NEMA ICS 6-88	Enclosures for Industrial Controls and Systems
NEMA MG 1-87	Motors and Generators
UL 674-89	Motors and Generators, Electric, for Use in Hazardous Locations, Class I, Groups C and D, Class II, Groups E, F and G
UL 1004-89	Motors, Electric

C. SHIPMENT, PROTECTION AND STORAGE:

Equipment shipment, protection and storage shall conform to the requirements specified in Section 01605.

1.03 SUBMITTALS

The following information shall be provided in accordance with Section 01300:

1. A copy of this specification section, with addendum updates included, and all referenced and applicable sections, with addendum updates included, with each paragraph check-marked to indicate specification compliance or marked to indicate requested deviations from specification requirements. Check marks (✓) shall denote full compliance with a paragraph as a whole. If deviations from the specifications are indicated, and therefore requested by the Contractor, each deviation shall be underlined and denoted by a number in the margin to the right of the identified paragraph, referenced to a detailed written explanation of the reasons for requesting the deviation. The Engineer shall be the final authority for determining acceptability of requested deviations. The remaining portions of the paragraph not underlined will signify compliance on the part of the Contractor with the specifications. *Failure to include a copy of the marked-up specification sections, along with justification(s) for any requested deviations to the specification requirements, with the submittal shall be sufficient cause for rejection of the entire submittal with no further consideration.*

2. A copy of the contract document control diagrams and process and instrumentation diagrams relating to the submitted equipment, with addendum updates that apply to the equipment in this section, marked to show specific changes necessary for the equipment proposed in the submittal. If no changes are required, the drawing or drawings shall be marked "no changes required". *Failure to include copies of the relevant drawings with the submittal shall be cause for rejection of the entire submittal with no further review.*

3. A copy of the contract document mechanical and structural drawings relating to the submitted equipment, with addendum updates that apply to the equipment in this section, marked to show specific changes necessary for the equipment proposed in the submittal. If no changes are required, the drawing or drawings shall be marked "no changes required". Failure to include copies of the relevant drawings with the submittal shall be cause for rejection of the entire submittal with no further review.

4. Certificate of Unit Responsibility attesting that the Contractor has assigned, and that the manufacturer accepts, unit responsibility in accordance with the requirements of this Section and paragraph 11000-1.02 C. *No other submittal material will be reviewed until the certificate has been received and found to be in conformance with these requirements.*

5. Manufacturer's catalog data confirming rated design capacity, horsepower, and electrical requirements.

6. Dimensional drawings including location of all piping, electrical, instrumentation, water supply, and structural connections. Drawings shall specifically include the proposed screening dumpster and associated

clearances to confirm coordination. Drawings shall also show clearances from adjacent walls and other structural elements to confirm clearances for maintenance requirements and general access.

7. Parts list with materials of construction.

8. Motor data submittal in accordance with Section 11060.

9. Detailed installation drawings, showing the size and location of all piping, electrical, instrumentation, and structural connections.

10. Shop drawings including location of all piping, electrical, instrumentation, and structural connections.

PART 2--PRODUCTS

2.01 ACCEPTABLE PRODUCTS

The Owner and Engineer believe the following candidate manufacturers are capable of producing screens that will satisfy the requirements of this Section. This statement, however, shall not be construed as an endorsement of a particular manufacturer's products, nor shall it be construed that named manufacturers' standard equipment or products will comply with the requirements of this Section. Candidate manufacturers (and products) include Huber (RoMesh), Parkson (Rotoshear PF), and WesTech (Cleanflo), modified as necessary to provide the specified features and to meet specified operating requirements.

2.02 MATERIALS

Component	Material
Screen Cylinder	Type 304 stainless steel, 24 gauge minimum
Cylinder Stabilizer	Type 304 stainless steel
Trunnion Wheel	Type 304 stainless steel
Splash Guard	Type 304 stainless steel, 16 gauge minimum
Inlet pipe	Type 304 stainless steel, 11 gauge
Head box	Type 304 stainless steel, 10 gauge minimum
Distribution Pan	Type 304 stainless steel, 12 gauge minimum
Base Frame	Type 304 stainless steel
Discharge	Type 304 stainless steel, 12 gauge minimum
Cover	Type 304 stainless steel, 14 gauge
Drain Pan	Type 304 stainless steel, 12 gauge minimum
Support legs	Type 304 stainless steel, 12 gauge minimum

2.03 GENERAL REQUIREMENTS

The BIDDER shall provide certification that calculations have been performed and signed by a registered structural or civil engineer confirming that the anchorage system is within allowable shear and tension limits.

Anchor bolts shall be furnished and shall be of adequate size and strength to securely anchor each piece of equipment. Anchor bolts, hex nuts, and washers shall be Type 304 stainless steel unless noted otherwise. Anchor bolts shall be L-type embedded. Expansion-type anchors will not be acceptable.

2.04 ROTARY DRUM SCREENS

670.

671. A. INLET FEED AND DRUM:

672.

673. Each drum screen shall be structurally designed to withstand the maximum possible hydraulic forces exerted by the liquid to the screen. All structural and functional parts shall be sized to prevent deflections or vibrations which may impair the screening operation. Liquid/solid mixture shall be introduced through an inlet pipe at the elevation shown on the Drawings and distributed by the head box and distribution pan to the screen cylinder. Inlet piping must be sized to ensure that the flow entering the inlet pipe does not exceed 5 ft/sec. The flow will be baffled in a head box to reduce forward velocity and provide momentary flow equalization. The flow will be directed from the head box into the distribution pan, which is cantilevered into the center of the screen cylinder. The distribution pan shall be designed to function as a distribution header that controls and distributes flow. Weirs located on either side of the pan shall distribute the flow evenly onto the screen cylinder.

674.

675. Screened solids shall be conveyed to a separate dewatering device. Liquid will be screened through a mesh basket within the screen cylinder and discharge to the downstream unit process. The head box and distribution pan will be provided with cleanout and drain ports for maintenance purposes.

676.

B. CYLINDER STABILIZER:

A cylinder stabilizer assembly shall be provided at the discharge end of the screen cylinder to maintain proper cylinder position along the longitudinal axis of the unit. The cylinder stabilizer assembly shall include a plastimeric guide, which straddles the flange on the discharge head of the screen cylinder and limits cylinder movement. Stabilizer mechanisms that have moving parts, require any type of periodic lubrication, or are mounted under the screen cylinder are not acceptable.

C. DRUM SUPPORT ASSEMBLIES:

Four (4) trunnion wheels assemblies shall be provided per screen. Trunnion wheel assemblies shall be accurately mounted to the base frame to provide positive horizontal placement of the screen cylinder. Each trunnion wheel shall be constructed of solid polyethylene. Trunnion wheels which require periodic lubrication are not acceptable. The

support shaft will be designed to provide center lubrication to the bearings. Trunnion wheel support bracket shall be designed to locate the trunnion support shaft and support the loads imposed by the cylinder. Each support shaft shall be accurately positioned and secured by the trunnion mounting bracket. The bracket will include a shaft cradle, which is designed to align and hold the position of the shaft, and to facilitate quick removal and installation of the trunnion wheel and shaft. Trunnion wheel brackets without quick release functionality are not acceptable. Each screen shall be provided with one removable (1) trunnion wheel replacement tool, which will lift the screen cylinder when a trunnion wheel requires replacing. Screens supplied without the trunnion wheel replacement tool are not accepted.

For units that do not require trunnion wheels for support, the drum shall be driven and supported by two (2) carbon fiber belts mounted onto both ends of the screen drum. A drive end pinion will drive the carbon fiber belt which will in turn drive and support the drum. No additional wheels, belts, or chains shall be required. Additionally, no lubrication or tensioning of belts shall be required. Design of drum drive and support system will be such that no special tools will be required for maintenance. Design will also facilitate quick and easy removal or replacement of drum support parts.

D. BASE FRAME:

The base frame assembly shall be accurately fabricated to provide a mounting surface for the screen assembly. The frame shall be designed to withstand the loads imposed by the head box structure and rotating screen cylinder. The base shall also be designed to allow for 4-point support at each corner without undue deflection throughout its length.

E. DISCHARGE END ENCLOSURE:

The discharge end enclosure shall be fabricated of minimum 12 gauge type 304 stainless steel. Unit shall be provided to enclose the discharge end of the screen cylinder and direct screenings into a screenings chute. The enclosure shall be provided with a flanged connection, to properly fit up with a chute extension.

A screenings chute extension, fabricated of minimum 12 gauge type 304 stainless steel shall be provided to direct screenings from the discharge end enclosure into the screenings compactor unit located inside the building below. The chute shall include a 6” flanged connection for connection of foul air piping as shown on the Drawings. Contractor shall coordinate with manufacturer as required to confirm location of duct connection.

F. DRAIN PAN AND SUPPORT STRUCTURE:

A drain pan shall be provided to collect liquid effluent and direct it into the discharge piping. The drain pan shall be bolted to the underside of the unit base frame and connect to a 24-inch bottom discharge pipe which will be provided by others. The depth of the drain pan shall be designed to prevent overflowing at the specified peak flow rate, assuming a free discharge condition. The location of the 24-inch drain connection shall be coordinated with the location of the 24-inch discharge collection header pipe located in the gallery below the screens. Contractor may utilize a flexible connection at this location (Victaulic, etc) to make the connection. The connection shall be water-tight.

The screen frame shall be mounted directly on a concrete curb as shown on the Drawings. The height of the concrete curb (by others) shall be as required to achieve the influent distribution weir elevation specified in Paragraph 1.01 E. If additional height is required, four (4) support legs may be provided to elevate the unit to and allow proper fit of the drain pan as necessary. The support legs shall be constructed of the same material as the base frame.

G. DIMENSIONAL CONSTRAINTS:

Rotating drum screens shall be designed to operate and fit within the space limitations shown on the Drawings, maintaining the maximum weir elevation (at the distribution pan) shown on the Drawings. Contractor shall coordinate the size (plan dimensions) for the screen floor opening and curb height (shown generally on the Drawings) to satisfy the mounting requirements for the proposed screening equipment, taking into consideration the drain pan connection (located on the level below) and the discharge chute to the proposed screw conveyor (located on the level below). The cost of any and all structural modifications required to accommodate the proposed screen shall be the responsibility of the Contractor.

H. CORROSION RESISTANCE:

Each rotating drum screen shall be designed for passively resisting corrosion from free and combined chlorine residuals, chlorides, hydrogen sulfide fumes, condensation containing sulfuric acid residual, and sulfates in concentrations typically found in municipal raw sewage, and other conditions specified herein. Dissimilar metals shall be isolated or carefully selected to prevent galvanic corrosion. All submerged components and all components of the rotating drum screen in contacted with screened solids shall be of stainless steel construction.

I. EQUIPMENT GUARDS:

Equipment guarding shall consist of hinged protective stainless steel guard to cover the open top of the screen basket. The completed guarding system shall be in conformance with OSHA requirements and paragraph 11128-2.05.

J. MAINTENANCE ACCESS:

Design of the rotary drum screens shall ensure that all maintenance to the mechanisms can be accomplished at or above the operating floor level shown. The screen should be designed to minimize the time required for routine preventive maintenance. Maintenance points shall be conveniently located.

K. DRIVE SYSTEM:

The drive system shall consist of a motor, gear reducer and drive shaft. Electric motors shall be Type I motors in accordance with Section 11060. The motor shall be close coupled to a foot or flange mounted parallel helical gear reducer. The gear reducer shall have an AGMA Class 1 rating for intermittent duty. The gear reducer shall be driven by a direct coupled motor, chain drives, belt drives, or hydraulic drives will not be acceptable. The reducer output shaft will

be keyed to accept a drive sprocket. The drive will be mounted on an adjustable base, which will allow the adjustment needed to maintain proper chain tension.

L. CHAIN & SPROCKET:

The screen shall have a chain and sprocket positive drive system that will eliminate the periodic lubrication requirement. Screen drive assembly shall consist of a hybrid chain, a hybrid drive sprocket, and a non-metallic driven sprocket. Hybrid assembly of the chain shall minimize the friction coefficient between the sprocket teeth and the chain rollers, and eliminate the need for grease or oil lubrication. A drive system that requires periodic lubrication (oil or grease) is not acceptable.

Drive sprocket shall consist of three components:

- Stainless steel hub, mounted on the drive output shaft.
- Replaceable non-metallic sprocket plate.
- Stainless steel keeper plate and fasteners.

The design of the drive sprocket assembly shall allow the replacement of the drive sprocket plate without removing the hub from the drive output shaft. All positive drive system components shall be made of corrosion resistant materials due to the highly corrosive environment. Drive systems shall be made completely of metallic components (carbon steel or stainless steel) that are subject to corrosion and frequent replacement are not acceptable

M. SPRAY WASH SYSTEM:

Screens shall be provided with both internal and external spray wash systems to clean the screen cylinder from both inside and outside. A plant reuse water (3W) supply shall be provided with a maximum capacity of 40 gpm @ 80 psi. If the combined spray wash system flow rate recommended for each spray wash system exceeds 50 gpm, the control system shall prevent simultaneous operation of the two systems.

The respective spray bar assemblies shall be constructed of Type 304 stainless steel pipe and will be drilled and tapped to provide the means to mount spray nozzles. Tapped holes shall ensure proper engagement of the nozzles into the header and prevent stripping or galling of the tapped hole threads. The nozzles shall be spaced to provide complete coverage of the respective screen surfaces. The nozzles shall be of a quick disconnect design to facilitate easy removal of the nozzle tip for cleaning.

An internal deflector shall be provided to cover the internal spray bar assembly. The deflector shall be designed so as not to interfere with the spray pattern yet provide adequate protection from solids that may otherwise accumulate on the spray bar and nozzles. The deflector shall be constructed of type 304 stainless steel.

2.05 SCREW CONVEYOR REQUIREMENTS

A. ACCEPTABLE PRODUCTS

The OWNER and ENGINEER believe the following candidate manufacturers are capable of producing equipment and/or products that will satisfy the requirements of this Section. This statement, however, shall not be construed as an endorsement of a particular manufacturer's products, nor shall it be construed that named manufacturers' standard equipment or products will comply with the requirements of this Section. Candidate manufacturers include Jim Meyers & Sons, Parkson, WesTech, or approved equal, modified to provide the specified features and to meet specified operating conditions.

B. MATERIALS

Component	Material
Screw or spiral	AISI, Type 316 or 316L stainless steel or carbon steel
Trough	AISI, Type 304 or 304L stainless steel
Screen basket	AISI, Type 304 or 304L stainless steel
Screenings conveyor and dewatering press	AISI, Type 304 or 304L stainless steel
Support stand	AISI, Type 304 or 304L stainless steel
Transition chute	AISI, Type 304 or 304L stainless steel
Fasteners and miscellaneous hardware	AISI, Type 304 stainless steel

Materials specified are considered the minimum acceptable for the purpose of durability, strength, and resistance to erosion and corrosion. The CONTRACTOR may propose alternative materials for the purpose of providing greater strength or to meet required stress limitations. Alternative materials, however, must provide at least the same qualities as those specified for the purpose.

C. GENERAL REQUIREMMENTS:

Each dewatering unit shall be mounted in accordance with local building code requirements for seismic and other required loading conditions. Manufacturer shall provide certification that calculations have been performed and signed by a registered structural or civil engineer confirming that the anchorage system is within allowable shear and tension limits and that the anchor embedment is adequate. The dewatering unit shall be designed and built to withstand maximum static hydraulic forces exerted by the liquid to the screen. All structural and functional parts shall be sized to prevent deflections or vibrations that may impair the conveying and pressing operations.

All welding shall conform to AWS-D1.1. Weld splatter shall be prevented by the use of splatter-prevention paste at welded joints. Weld slag shall be removed. After welding

operations, stainless steel components solvent that is free of chlorides. After organic materials have been removed, embedded iron shall be removed from the stainless steel by pickling with nitric or hydrofluoric acid. Sandblasting, bead blasting, or grit blasting of stainless steel surfaces shall not be allowed in lieu of the acid passivation. Welded ferrous or steel components shall be provided with continuous seal welds between full penetration skip welds or sealed with a paintable silicone caulk.

D. SCREW/SPIRAL:

The spiral shall be of the shaftless screw type, constructed of single or multiple concentric flights formed continuously from bar stock and welded together to form a spiral. At the drain end of the unit, the spiral shall be fitted with a water-resistant brush which shall clean the screen openings and be secured with stainless steel fasteners or welding. At the drive end of the spiral, the drive shaft of the gear motor shall be welded directly to the spiral.

E. TROUGH AND SUPPORTS:

The dewatering unit trough will be inclined to direct liquid to a collection area at the lower, motor end of the unit. The trough shall be constructed of minimum 11-gauge Type 304L stainless steel. The trough length shall be as necessary to deposit dewatered screenings into the corresponding dumpster from the fine screen discharge chute as shown in the Drawings. The trough will be lined with a minimum 3/8-inch thick UHMW polyethylene sheet.

The entire trough including compaction area shall be provided with covers to provide a completely enclosed system. The covers shall include multiple access hatches spaced as necessary to provide access to all internal components.

The entire unit will be supported by support legs attached to the trough assembly. The support legs shall be designed to support all operating and seismic loads specified herein with heights as appropriate to achieve specified inclination and discharge elevations specified. Support legs shall be mounted directly to concrete housekeeping pads or piers as shown in the Drawings.

F. INLET HOPPER AND TRANSITION CHUTE:

A vertical fabricated discharge chute shall be provided to direct screenings from the discharge connection of the influent fine screen (on the level above) to the feed hopper of the dewatering unit trough. The chute shall provide a totally enclosed pathway between the fine screen discharge and dewatering unit hopper and include an inspection hatch providing visual inspection of the hopper area. The chute shall be designed to permit easy disconnection (via a flexible connection) from the fine screen and dewatering unit.

The hopper section will be flange bolted to the trough with each side a minimum 60 degrees from horizontal. The chute and hopper shall be constructed of Type 304L stainless steel.

The transition chute shall accommodate the 6-inch foul air duct connection shown on the Drawings. Contractor shall coordinate the location of this duct connection with the final duct layout for the area.

G. LOWER DRAINAGE AREA:

Free liquid from the screening material will drain through a screen located at the lower, drive end of the unit. The screen will consist of a perforated plate, conforming to the trough geometry and cleaned by brushes attached to the spiral. A collection area will be provided below the screen with a minimum 3-inch drain pipe connection to remove liquid accumulated. Contractor shall route drain pipe to building process drain system as shown on the Drawings.

H. COMPACTION ZONE AND DISCHARGE:

Each dewatering unit shall include a compaction zone at the discharge end of the screw consisting of a press plate/shutter assembly, screen and collection area and spray wash system.

4. PRESS PLATE/SHUTTER ASSEMBLY. The discharge end of the spiral shall include a weighted, gas cylinders, or spring-controlled discharge plate that shall impart resistance to the passage of screenings to compact and dewater the screened material. The force of compaction shall create a plug of dewatered material that will be deposited by gravity into a collection dumpster directly below. The assembly shall permit the amount of resistance/tension applied to the plate to be adjusted manually.

5. SCREEN AND COLLECTION AREA. Similar to the lower drainage area, the compaction zone shall include a wedge wire screen with 1 mm openings extending the entire length of the compaction zone and associated drainage collection area. A hinged top cover shall be provided in this area to provide easy access for cleaning. Drainage from this area shall be piped primary unit drain at the lower drain collection area.

6. SPRAY WASH SYSTEM. A spray wash system to flush screenings residue from the press zone shall be provided consisting of a radial spray header and solenoid valve. Spray header will have multiple openings sized as appropriate to effectively clean the wedge wire screen area. The system will have a maximum output of 10 GPM at 40 psig. A ¾-inch NPT spray water connection shall be provided to connect to the plant water (3W) supply. Solenoid and pressure reducing valve(s) for the spray wash system shall be provided, as required, by the dewatering unit equipment manufacturer, and shall conform to the requirements of Specification Sections 15147 and 15153, respectively.

I. DRIVE UNIT AND MOTOR:

The drive system shall consist of a motor, gear reducer and drive shaft. The drive shaft will shall be direct coupled to the spiral and be constructed of prime coated AISI 1045 carbon steel. The motor shall connect to the drive shaft via a shaft-mounted gear reducer. Gear reducer shall be parallel helical type gear reducer with a direct coupled connection to the motor. The service factor rating shall be 1.8. Electric motors shall be Type 3 explosion proof motors in accordance with Section 11060.

J. BAGGING SYSTEM

The screenings dewatering unit shall include an integral bagging system. The bagging system shall consist of an AISI 304 stainless steel bag holder that shall mount on the discharge of the dewatering unit. The holder shall be readily removable for inspection and service. The holder shall provide for a consumable high strength bio-degradable polyethylene tube/bag to receive screenings directly from the compactor. The system shall allow for direct screenings storage in a variable capacity system.

G. DIMENSIONAL CONSTRAINTS:

The configuration, elevations and locations for the screenings dewatering units shall be coordinated with the proposed screenings dumpster (located at the dewatering unit discharge) and the fine screen unit above. Contractor and manufacturer shall coordinate to satisfy the specified clearances for equipment indicated on the Contract Drawings including recommended allowances for equipment maintenance and access to the dumpster.

2.06 ELECTRICAL CONTROLS

A. CONTROL PANELS:

A common local control panel shall be provided for each drum screen and screenings conveyor system in accordance with the requirements of this section and Division 16 and 17. Control panels shall be 480 volt primary UL-508A listed with NEMA 4X, 316 SS enclosures. The panels will be located outdoors in an unclassified area adjacent to the drum screens.

Panels will contain the following minimum logic devices required for proper operation of the screening and conveying equipment:

1. Main disconnect switch (fused) or circuit breaker with flanged, lockable disconnecting means; with 44 KAIC interupting rating.
2. 480 volt to 120 volt transformer
3. Variable frequency drive (for fine screen)
4. All controllers, timers, programmable relays, etc. required to monitor equipment mounted electrical devices to perform necessary logic functions
5. E-Stop push button for screen and conveyor system
6. Control power On indicating light (white)
7. Hand-Off-Auto (HOA) selector switches (up to five for each screen/screw system):
   a. Drum screen
   b. Drum screen spray wash system(s)
   c. Dewatering screw
   d. Dewatering screw spray wash system
8. Separate motor overload/overcurrent alarm lights for screen and screw (Amber)
9. Separate screen and screw running lights (Red)

10. Separate screen and dewatering screw fault lights
11. Fault reset push button(s)
12. Two elapsed time meters (one for screen, one for screw)
13. Input and output signals as shown on the P&ID drawings for control and monitoring of the systems.

B. CONTROL DEVICES:

In addition to the respective drive motors, the following electrical devices shall be furnished with each screen/dewatering screw unit:

1. DRUM SCREEN SPLASH GUARD INTERLOCK SWITCH: A 120 volt NEMA 4X interlock switch shall be provided for each access door (splash guard) of the screen enclosure. Each switch will be wired to the control panel to cause the unit to completely stop rotating upon opening of the door/guard.

2. EMERGENCY STOP LOCAL PUSH BUTTON STATIONS: Separate emergency stop push button stations will be provided for the screen and dewatering screw. E-stops stations shall include NEMA 7 enclosures for dewatering screw and NEMA 4x for drum screens.

E-stops for each station shall be wired to the vendor control panel to cause all unit functions (screen and dewatering screw) to cease upon pressing the E-Stop at any location.

3. SPRAY SOLENOID VALVES (FOR SCREENS AND DEWATERING SCREWS): While the units are in operation, each separate water spray system will be actuated by a normally closed solenoid valve. Solenoid valves shall be as specified in section 15147. Each solenoid valve will be field installed by the contractor in the respective wash water supply line.

4. ROTARY DRUM ZERO SPEED SWITCH: A zero speed switch will be provided to detect loss of motion to the drum screen assembly. The assembly will consist of a NEMA 7 probe mounted on the unit to receive signals from ferrous blocks mounted to the inlet head of the screen assembly. A NEMA 4X amplifier will receive the signals from the probe and provide alarm contacts for remote indication.

C. SYSTEM SEQUENCE OF OPERATION:

The electrical and control systems for each fine screen and dewatering screw system shall provide for the following minimum operating control strategy:

<u>Fine Screen Operation</u>:

1. HAND OPERATION: When HAND mode is selected, the screen unit will run continuously. When spray wash HAND mode(s) is selected, the respective spray wash system will run continuously.

2. AUTO OPERATION: When AUTO mode is selected, the screen drum drive motor and/or spray wash system (s) will be controlled automatically as follows:

a. The screen unit motor shall start after the remote customer start contact closes indicating flow is active to the unit. It continues to run until the customer start contact opens indicating flow has ceased to the unit, then the unit motor will continue to run for an adjustable time period as per the settings on the off-delay timer.

b. The spray water solenoid valve (s) will cycle per the settings on their own repeat timer whenever the unit motor is running.

Dewatering Screw Operation:

1. HAND OPERATION: When HAND mode is selected, the screw will run continuously. When spray wash HAND mode is selected, the spray wash system will run continuously.

2. AUTO OPERATION: When AUTO mode is selected, the screw drive motor and/or spray wash system will be controlled automatically as follows:

a. The screw drive will operate whenever a run signal is received from the drum screen and will cycle based on the settings of a repeat cycle timer until the run signal is deactivated. (Initial settings: 30 seconds ON, 30 seconds OFF).

b. The spray water system will operate independently of the spiral cycle via its own repeat cycle timer. (Initial settings: 15 seconds ON, 30 minutes OFF)

Overall System Operation:

1. EMERGENCY STOP: The entire system (screen and dewatering screw) can be stopped at any time by pressing either the control panel-mounted or individual unit-mounted Emergency Stop push buttons. The entire system will also be stopped whenever the drum screen access doors/splash guards are opened (as detected by a splash guard interlock switches).

2. FAULT CONDITIONS: Excessive motor current at the drum screen will trip the starter overload relays and immediately stop the drive motor. Pushing the reset button on the motor starter thermal overload will reset this fault.

Excessive motor current at the dewatering screw will trip the starter overload relays, immediately stop the drive motor. This fault must be reset by depressing the motor starter overload reset internal to the control panel.

Excessive momentary motor current at the dewatering screw will trip the current monitor and immediately stop the drive motor. Pushing the Reset button will reset this fault.

2.07 FINISHES

Stainless steel components shall be provided with an ASTM A666, No. 2D finish. Ferrous or steel components shall be coated with a prime coat at the factory. The Contractor will provide a compatible finish coat in the field. Motor, gear reducer, bearings and chain will be provided with the manufacturers' standard finish suitable for a severe environment.

2.08 SPARE PARTS

Spare parts provided with the screens shall include all special tools required to assemble, disassemble, or maintain the equipment.

The following spare parts shall be provided:

Fine Screen

4	trunnion wheels (Complete)
1	spare trunnion wheel shaft
1	drive chain
1	drive sprocket
10	spray nozzles for screen
5	Of each type fuse
3	Of each type relay
5	Of each type pilot light lamp

Dewatering Conveyor

1	set shaft seals
1	replacement screw
-	Sufficient length of liner material for complete replacement of 1 unit
1	set of all brushes (if req'd)
5	spray nozzles for conveyor (if req'd)

Spare parts shall be stored in accordance with the provisions of this paragraph. Spare parts shall be tagged by equipment number and identified as to part number, equipment manufacturer, and subassembly component (if appropriate). Spare parts subject to deterioration such as ferrous metal items and electrical components shall be properly protected by lubricants or desiccants and encapsulated in hermetically sealed plastic wrapping. Spare parts with individual weights less than 50 pounds and dimensions less than 2 feet wide, or 18 inches high, or 3 feet in length shall be stored in a wooden box with a hinged wooden cover and locking hasp. Hinges shall be strap type. The box shall be painted and identified with stenciled lettering stating the name of the equipment, equipment numbers, and the words "spare parts." A neatly typed inventory of spare parts shall be taped to the underside of the cover.

2.09 PRODUCT DATA

The following information shall be provided in accordance with Section 01300:

1. Applicable operation and maintenance data. Seven copies of the specified operating and maintenance information shall be provided. For

ease of identification, each BIDDER's brochure and manual shall be appropriately labeled with the equipment name and equipment number. The binders shall be provided with a table of contents and tab sheets to permit easy location of desired information. Binders shall be the post type with durable covers.

If BIDDER's standard brochures and manuals are used to describe operating and maintenance procedures, such brochures and manuals shall be annotated to reflect only the model or series of equipment used on this project through use of highlighting, arrows, or other methods.

a. Lubrication Information: This shall consist of the BIDDER's recommendations regarding the lubricants to be used, the lubrication schedule to be followed, and a table of equivalent lubricants.

b. Control Diagrams: Diagrams shall show internal and connection wiring.

c. Start-Up Procedures: These instructions consist of BIDDER's recommendations for installation, adjustment, calibration, and troubleshooting.

d. Operating Procedures: These instructions consist of the BIDDER's recommended step-by-step procedures for starting, operating, and stopping the equipment under specified modes of operation.

e. Preventative Maintenance Procedures: These instructions consist of the BIDDER's recommended steps and schedules for maintaining the equipment.

f. Overhaul Instructions: These instructions consist of the BIDDER's directions for the disassembly, repair and reassembly of the equipment and any safety precautions that must be observed while performing the work.

g. Parts List: This list consists of the generic title and identification number of each component part of the equipment.

h. Spare Parts List: This list consists of the BIDDER's recommendations of number of parts which should be stored by the OWNER and any special storage precautions which may be required.

i. Exploded View: Exploded or cut views of equipment shall be provided if available as a standard item of the BIDDER's information. When exploded or cut views are not available, plan and section views shall be provided with detailed callouts.

2. Installation details and instructions.

PART 3--EXECUTION

3.01 INSTALLATION AND STARTUP

Equipment furnished under this section shall be installed, checked, and adjusted by the Contractor in accordance with recommendations of the equipment manufacturer. The BIDDER shall provide the services of a manufacturer-trained and approved representative for not less than 3 days to complete the Installation Certification Form (appended) and to be present during equipment startup. Installation and startup services shall include verification and troubleshooting of screen controls operating under the ladder logic provided by the BIDDER.

3.02 TRAINING

Testing of equipment and systems shall be conducted in accordance with the requirements of Section 01660.

3.03 TESTING

Following installation, the CONTRACTOR shall conduct a performance test to verify the proper operation of each rotary drum screen. For 20 operating cycles the structural support members shall be checked for deflection or evidence of wear or stress to screen components. Operating speed shall be verified and the unit checked for any misalignment. Should any of the screens fail to meet this requirement, it shall be the equipment BIDDER's responsibility to repair or replace the unit.

Each rotary drum screen also shall be field tested to ensure proper operation over a period of 72 hours.

END OF SECTION

SECTION 11148

VORTEX GRIT REMOVAL UNITS

PART 1 – GENERAL

1.01 DESCRIPTION

A. SCOPE:

This section specifies vortex-type grit removal units to be furnished and installed within a circular concrete grit removal chamber, including all required appurtenances as described herein.

The manufacturer shall review the mechanical and structural layout drawings to familiarize themselves with the location and the set-up of the equipment specified and shall assure themselves that the equipment specified is appropriate for and coordinated with what is shown on the contract drawings. The manufacturer shall also review the relevant electrical plan and one-line diagram and the relevant process and instrumentation diagram drawing to ensure that the contract drawings are appropriate and coordinated with the equipment and controls specified.

Contractor shall note that the dimensional requirements and configuration for the grit tank will vary between manufacturers and may vary from the Contract Drawings. The Contractor is responsible for the cost of any changes, including redesign, resulting from vortex grit system structure and equipment-related changes, including but not limited to changes to the following: physical dimensions and elevations of vortex tank and connecting channels, equipment pads, equipment panels, equipment panel locations, and equipment interconnections. The vortex grit system shall fit within and be fully functional under the physical, mechanical, and electrical constraints provided in the Contract Documents. Contractor shall provide dimensioned drawings to Engineer for review indicating required tank elevations and dimensions prior to any other structural work in the area in order to finalize structural requirements and coordinate elevations with the plant hydraulic profile. The cost of any and all structural modifications required to accommodate the proposed vortex grit system shall be the responsibility of the Contractor.

B. TYPE:

The grit removal equipment shall be of the circular, forced vortex type with a 270-degree (inlet to outlet) configuration. Both slopped and flat bottom tank design are allowed.

C. EQUIPMENT LIST:

Item	Equipment No.
Grit Removal Chamber	MME-2030

1.02 QUALITY ASSURANCE

A. GENERAL:

The grit removal device shall have a head loss of less than 1/2 inch, at maximum flow, and shall be capable of removing grit from screened wastewater and depositing it in the grit storage chamber.

All devices, lubrication and support equipment bearings shall be readily accessible.

The grit shall fall out onto the floor of the grit removal unit, where it is transported across the floor to an orifice in the transition surface between the upper chamber of the grit removal unit and the grit storage chamber. Grit shall fall through this orifice into the grit storage chamber. The propeller paddles shall function to separate grit from the settled grit as it moves across the floor and keep the organic material in suspension so that it exits the grit removal unit via the outlet channel.

The Contractor shall guarantee performance as specified for the grit removal device and shall carry out a test in accordance with Section 01660 to prove that the equipment performs as specified.

B. OPERATING CONDITIONS:

The grit removal unit shall be capable of removing grit according to the sizes and quantities indicated below (Percent Removed – US Std Class. System):

Greater than 50 mesh in size	95%
Greater than 70 mesh in size	85%
Greater than 100 mesh in size	65%

The grit chamber shall handle all flows equal to or less than the hydraulic peak hourly flow of 7.5 mgd. Grit removal efficiency shall be maintained up to a peak hourly flow of 7.0 mgd. Current typical daily minimum and average flow rates to the treatment plant are 200 gpm and 700 gpm, respectively.

Grit shall be removed from the grit storage chamber by means of a recessed impeller pump, pumping to a dedicated grit cyclone and grit classifier. Grit pumps, and cyclones /

classifiers are specified separately in Sections 11355 and 11323 respectively. All internal openings in the piping to the grit pumping system shall be large enough to pass a 3-inch sphere.

The drive unit shall be designed for 24-hour per day continuous service.

C. UNIT RESPONSIBILITY:

The Contractor shall assign unit responsibility as specified in paragraph 11000-1.02 C. to the grit removal unit manufacturer for the equipment specified in this Section. A certificate of unit responsibility shall be provided.

1.03 ENVIRONMENTAL CONDITIONS

The equipment to be provided under this section will be installed outdoors in a new headworks structure to be constructed under this project at the Little River Water Reclamation Facility in Fulton County, Georgia. The equipment shall be suitable for continuous operation under the environmental conditions specified in Section 01800. The concrete tank shall be enclosed with metal covers as shown and specified on the Drawings.

1.04 SUBMITTALS

The following information shall be provided in accordance with Section 01300:

1. A copy of this specification section, with addendum updates included, and all referenced and applicable sections, with addendum updates included, with each paragraph check-marked to indicate specification compliance or marked to indicate requested deviations from specification requirements. Check marks (✓) shall denote full compliance with a paragraph as a whole. If deviations from the specifications are indicated, and therefore requested by the Contractor, each deviation shall be underlined and denoted by a number in the margin to the right of the identified paragraph, referenced to a detailed written explanation of the reasons for requesting the deviation. The Engineer shall be the final authority for determining acceptability of requested deviations. The remaining portions of the paragraph not underlined will signify compliance on the part of the Contractor with the specifications. *Failure to include a copy of the marked-up specification sections, along with justification(s) for any requested deviations to the specification requirements, with the submittal shall be sufficient cause for rejection of the entire submittal with no further consideration.*

2. A copy of the contract document control diagrams and process and instrumentation diagrams relating to the submitted equipment, with addendum updates that apply to the equipment in this section, marked to show specific changes necessary for the equipment proposed in the submittal. If no changes are required, the drawing or drawings shall be

marked *"no changes required"*. *Failure to include copies of the relevant drawings with the submittal shall be cause for rejection of the entire submittal with no further review.*

3. A copy of the contract document mechanical and structural drawings relating to the submitted equipment, with addendum updates that apply to the equipment in this section, marked to show specific changes necessary for the equipment proposed in the submittal. If no changes are required, the drawing or drawings shall be marked "no changes required". *Failure to include copies of the relevant drawings with the submittal shall be cause for rejection of the entire submittal with no further review.*

4. Certificate of Unit Responsibility attesting that the Contractor has assigned, and that the manufacturer accepts, unit responsibility in accordance with the requirements of this Section and paragraph 11000-1.02 C. No other submittal material will be reviewed until the certificate has been received and found to be in conformance with these requirements.

5. Manufacturer's catalog and/or other data confirming conformance to these specifications.

6. Motor data as specified in Section 11060.

7. Detailed drawings with complete dimensions and elevations for all grit tank components including influent and effluent channels, hopper floor configuration, etc. Drawings shall include location of all piping, electrical, instrumentation, and structural connections. Drawings shall also provide recommendations for the orientation and configuration of proposed air and flush water connections for the bottom of the hopper (near the grit removal pipe). These provisions are shown conceptually on the Contract Drawings.

8. Performance test procedures as specified in paragraph 11148-3.02 B., including a plan showing sample locations, sample collection piping schematics, sample pump capacity, settling basin volume, and detailed written procedures covering the test procedures and calculation of percent removal.

PART 2 – PRODUCTS

2.01 ACCEPTABLE PRODUCTS

The Owner and Engineer believe the following candidate manufacturers are capable of producing vortex grit removal units that will satisfy the requirements of this Section. This statement, however, shall not be construed as an endorsement of a particular manufacturer's

products, nor shall it be construed that named manufacturers' standard equipment or products will comply with the requirements of this Section. Candidate grit removal systems shall be of the 270-degree configuration as provided by Smith and Loveless, John Meunier, and Jones and Atwood.

2.02 MATERIALS

The vortex grit system shall consist of a cast in place concrete structure with associated equipment specified herein or otherwise required to provide a fully functional system in accordance with the requirements of this specification. Concrete properties and related structural materials shall be as specified elsewhere. Materials of construction for the remaining equipment specified in this Section shall be as follows:

Components	Material
Gear motor enclosure	Non-corrosive aluminum
Gears	Hardened and heat treated alloy steel
Spur gear pinion	High strength normalized steel
Bull gear	Wear resisting mechanite
Gear case	Heavy cast iron
Grit well cover plate	Steel
Paddle	Stainless steel, Type 304

Materials specified are considered the minimum acceptable for the purposes of durability, strength, and resistance to erosion and corrosion. The Contractor may propose alternative materials for the purpose of providing greater strength or to meet required stress limitations. However, alternative materials must provide at least the same qualities as those specified for the purpose.

2.03 EQUIPMENT

A. GENERAL:

The Contractor shall provide all of the necessary appurtenant items including structural supports to produce a fully functioning, normally operating grit removal unit and controls. Water agitation and grit pumping will be provided separately under other specification sections.

B. PROPELLER:

The grit removal unit shall have a constant speed, variable pitch propeller for gently agitating flow.

C. DRIVE:

The propeller shall be driven by a totally enclosed helical gear reducer with a service factor of 2.0 or better. Gear teeth shall be hobbed and crown-shaved or crown-ground. Helical gearing shall be oil lubricated. A pinion mounted on the output shaft of the gear reducer shall drive a larger spur tooth bull gear enclosed in a grease packed gear case.

The bull gear shall be appropriately sized and mounted on a turntable bearing. Pinion and bull gears shall have a service factor of 5.0 or better.

The bull gear box shall be specifically designed for this service. It shall have an opening for the drive torque tube to the propeller. The gear box shall be sealed with ground joints. The bottom opening shall have an air bell around the drive torque tube to prevent water from entering the gear box in case of flooding. All bearings shall have an L-10 bearing life of 100,000 hours.

D. MOTOR:

The drive motor shall be a totally enclosed, explosion-proof with fan-cooled motor suitable for outside installation. It shall have normal starting torque and low starting current. The motor shall be as specified in Section 11060 and shall be non-overloading under any normal operating conditions encountered. Motor shall be maximum 1.5 HP.

E. CORROSION PROTECTION:

Corrosion protection shall be as specified in Section 09900. All prime and finish coats shall be factory applied

F. CONTROLS:

Each grit removal unit shall be provided with a mechanical torque overload limit switch. When an obstruction forces the drive unit torque beyond the manufacturer's predetermined set point, the switch contacts shall open. The contacts shall close after the alarm condition has passed and a remote manual alarm reset button has been depressed.

2.04 SPARE PARTS

Spare parts as recommended by the manufacturer shall be provided.

2.05 PRODUCT DATA

The following information shall be provided as indicated:

1. Operation and maintenance (O&M) manuals shall be provided in accordance with the requirements of Section 01700. O&M manuals shall be provided prior to delivery of the equipment.

2. Manufacturer's written installation details and instructions shall be

provided prior to delivery of the equipment. Templates required for equipment anchor bolt locations shall be provided by the manufacturer to the Contractor prior to placement of concrete.

3. Installation Certification Form 11000-A as specified in paragraph 11148-3.01 shall be provided prior to any testing of the equipment.

4. Training Certification Form 11000-B as specified in paragraph 11148-3.01 shall be provided immediately after completion of training.

PART 3 – EXECUTION

3.01 INSTALLATION

The Contractor shall install the equipment as shown to the requirements of these specifications and to the requirements of the equipment supplier's shop drawings and specifications. The Contractor shall determine to his own satisfaction the adequacy of the information on installation and testing provided by the equipment supplier. The installation shall be certified on Form 11000-A as specified in Section 01999.

3.02 TESTING

A. GENERAL:

Each grit removal unit shall be field tested in accordance with the requirements of Section 01660. In addition to the testing specified in Section 01660, performance testing shall be provided as specified in paragraph 11148-3.02 B.

B. PERFORMANCE TESTING:

1. GENERAL: After the equipment is installed and the complete grit removal system is operational, testing of the system by the Contractor is required. The testing operation will require a coordinated effort between the equipment supplier and the Contractor. The Contractor shall provide a testing program to the Engineer for approval before any performance tests are run for acceptance of the system. Performance testing shall be conducted by the Contractor in the presence of a certified representative of the equipment manufacturer, the Owner, and Engineer.

The purpose of this performance testing is to demonstrate compliance with the grit removal efficiencies specified in paragraph 11148-1.02 B. Should the grit removal unit fail to meet the specified removal efficiencies, the Contractor shall cause the necessary equipment modifications or replacements to be made to obtain compliance with the specified performance requirements. All costs for such modifications and/or replacements and all costs for testing and retesting, if required, shall be borne by the Contractor.

2. TEST PROCEDURE: A detailed performance testing procedure shall be submitted. This performance testing procedure shall duplicate as nearly as possible the expected conditions of operation at a minimum of two flow rates. These flow rates shall be approximately 1.0 and 2.6 million gallons per day (mgd) through a single grit removal unit. One grit removal unit may be removed from service during testing to obtain the higher flow rates. Grit removal efficiencies at each flow rate shall be determined by averaging the results obtained from at least 10 sample runs at that flow rate. Influent and effluent samples shall be obtained simultaneously. For the purpose of this test, grit shall be defined as any inorganic substance having a specific gravity greater than 2.5. The test procedure submitted shall be similar to the following:

a) An adequate grit sample shall be obtained during each sample run to allow for an accumulation of a sufficient quantity of grit to obtain workable sample weights. The sample pumps used to obtain the influent and effluent samples shall be sized so that an adequate sample is obtained before a significant change in flow rate (±5 percent) occurs.

b) Samples shall be obtained from at least six different locations (horizontal and vertical) in both the influent and effluent channels of the grit removal unit. These samples shall be collected through orifices or tubes located in the influent and effluent channels and routed to a settling basin of known volume, to be provided by the manufacturer as a part of the test equipment. The orifices or tubes shall have a minimum diameter of 1 inch and a minimum inlet velocity of 5 feet per second (fps). The orifices or tubes shall be monitored during each sample run to ensure that there is no pluggage and that flow is maintained.

c) At the termination of each test run, the supernatant shall be decanted from the top of each settling basin until approximately 1 inch of liquid remains at the bottom. All grit shall be carefully washed from each settling basin to ensure 100 percent capture.

d) The sample shall then be passed through a 100 mesh screen to trap all particles larger than 100 mesh.

e) The grit captured on the 100 mesh screen shall be transferred to an evaporating dish where it will be dried and placed in a muffle furnace at 550 degrees C for 30 minutes to volatilize organics.

f) The sample shall then be cooled in a desiccator and passed through 50, 70, and 100 mesh sieves.

g) Each residue shall be weighed, including the amount passing through the 100 mesh sieve. This provides a grit size gradation for

both the influent and the effluent samples.

The removal efficiency specified in paragraph 11148-1.02 B is for inlet to outlet removal efficiency based on percentage. The 100 mesh removal figure represents all material passing the 70 mesh screen but retained on the 100 mesh screen. This removal efficiency shall be provided for all test runs, in both tabular and graphical format. In addition, the grit size gradation observed and grit quantity in pounds per gallon shall be provided in tabular format for each flow rate.

3.03 TRAINING

A minimum of 8 hours of training as specified in Section 01664 shall be provided. Training shall be certified on Form 11000-B specified in Section 01999.

END OF SECTION

SECTION 11155

HELICAL SKIMMER

PART 1--GENERAL

1.01 DESCRIPTION

A. SCOPE:

This section specifies a motor driven helical skimmer used to remove scum, floatables, and solids that may accumulate in the sludge thickening membrane tank.

1. Provide all labor, material and equipment to furnish and install one (1) helical skimming mechanism, 18-inch diameter by approximately 12-ft long in the sludge thickening tank.

2. The skimmer shall rotate at approximately 5.5 rpm and skim the full width between the side walls and shall carry scum up a curved beach for discharge into a scum trough.

B. WORK AND COMPONENTS:

The Manufacturer shall furnish the items listed below:

1. Helical wiper blade
2. Shafting with blade supports
3. Wall bearings
4. Beach plate
5. Scum trough
6. Speed reducer and motor
7. Drive base plate
8. Drive sprocket, torque overload device and appropriate guards
9. Driven sprocket
10. Drive chain
11. Associated attachment bolts and anchor bolts
12. Transition section between the skimmer trough and discharge into the sludge holding tank.

Like items of equipment specified herein shall be the end products of one manufacturer in order to achieve standardization for operation, maintenance, spare parts and Manufacturer's service.

1.02 RELATED WORK

1. General requirements are included in Division 1.

2. Concrete work is included in Division 3.

3. Surface preparation and field painting are included in Division 9.

4. Instrumentation, except for those specified herein, is included in Division 17.

5. Mechanical piping, valves, pipe hangers and supports and appurtenances are included in Division 15.

6. Electrical work is included in Division 16.

1.03 QUALITY ASSURANCE

A. PERFORMANCE REQUIREMENTS:

Equipment named and specified herein is intended to establish the type, function and quality required. Equipment of other manufacturers may be accepted if sufficient information is submitted by the Contractor to allow the Engineer to determine that the equipment proposed is equivalent to that named.

The basic requirements of this specification are the non-metallic components which eliminate corrosion associated with cast and steel components, and the fiberglass flight design which is critical to mechanism performance. Materials specified herein promote longer life resulting in lower operating and maintenance costs. Substitute equipment which is a “standard product” of the Manufacturer shall be modified, redesigned from the standard or shall be furnished with special features as may be necessary to conform to the requirements of the specification and contract drawings. Material variances shall not be allowed.

Equipment shall be furnished by a Manufacturer having manufactured complete chain and flight collector systems for a minimum period of not less than 10 years. Manufacturer shall be fully experienced, reputable and qualified in the manufacture of the equipment to be furnished. The equipment shall be designed, constructed and installed in accordance with the best practices and methods. This Section calls attention to certain features, but does not purport to cover all details entering into the design and construction of the equipment.

The following standards apply to the work and products specified herein.

1. American Society for Testing and Materials (ASTM)

   a. ASTM A36 – Standard Specification for Carbon Structural Steel

   b. ASTM A48 – Standard Specification for Gray Iron Castings

c. ASTM D570 – Standard Test Method for Water Absorption of Plastics

d. ASTM D638 – Test Method for Testing Properties of Plastics

e. ASTM D785 – Standard Test Method for Rockwell Hardness of Plastics and Electrical Insulating Materials

f. ASTM D2584 – Standard Test Method for Ignition Loss of Cured Reinforced Resins

g. ASTM D4020 – Standard Specification for Ultra-High-Molecular Weight-Polyethylene Molding and Extrusion Materials

2. American National Standards Institute (ANSI)

a. ANSI B15 – Ball Bearing, Load Ratings and Fatigue Life

b. ANSI B29.21M-1996 – 700 Class Welded Steel and Cast Chains, Attachments and Sprockets for Water and Sewage Treatment Plants

3. The Society of Protective Coatings (SSPC)

a. SSPC-SP-10 – Surface Preparation Specification No. 10 Near White Blast Cleaning

4. National Electrical Manufacturers Association (NEMA)

5. American Welding Society (AWS)

6. American Gear Manufacturers Association (AGMA)

7. American Society of Mechanical Engineers (ASME)

8. American Bearing Manufacturers Association (ABMA)

9. Where reference is made to one of the above standards, the revision in effect at the time of bid opening shall apply.

1.04 SUBMITTALS

The following information shall be provided in accordance with Section 01300:

11. A copy of this specification section, with addendum updates included, and all referenced and applicable sections, with addendum updates included, with each paragraph check-marked to indicate specification compliance or marked to indicate requested deviations from specification requirements. Check marks (✓) shall denote full compliance with a

paragraph as a whole. If deviations from the specifications are indicated, and therefore requested by the Contractor, each deviation shall be underlined and denoted by a number in the margin to the right of the identified paragraph, referenced to a detailed written explanation of the reasons for requesting the deviation. The Engineer shall be the final authority for determining acceptability of requested deviations. The remaining portions of the paragraph not underlined will signify compliance on the part of the Contractor with the specifications. *Failure to include a copy of the marked-up specification sections, along with justification(s) for any requested deviations to the specification requirements, with the submittal shall be sufficient cause for rejection of the entire submittal with no further consideration.*

12. A copy of the contract document control diagrams and process and instrumentation diagrams relating to the submitted equipment, with addendum updates that apply to the equipment in this section, marked to show specific changes necessary for the equipment proposed in the submittal. If no changes are required, the drawing or drawings shall be marked "no changes required". *Failure to include copies of the relevant drawings with the submittal shall be cause for rejection of the entire submittal with no further review.*

13. A copy of the contract document mechanical and structural drawings relating to the submitted equipment, with addendum updates that apply to the equipment in this section, marked to show specific changes necessary for the equipment proposed in the submittal. If no changes are required, the drawing or drawings shall be marked "no changes required". Failure to include copies of the relevant drawings with the submittal shall be cause for rejection of the entire submittal with no further review.

14. Certificate of Unit Responsibility attesting that the Contractor has assigned, and that the manufacturer accepts, unit responsibility in accordance with the requirements of this Section and paragraph 11000-1.02 C. *No other submittal material will be reviewed until the certificate has been received and found to be in conformance with these requirements.*

15. Manufacturer's catalog data confirming rated design capacity, horsepower, and electrical requirements.

16. Dimensional drawings.

17. Parts list with materials of construction.

18. Motor data submittal in accordance with Section 11060.

19. Detailed installation drawings, showing the size and location of all piping, electrical, instrumentation, and structural connections.

20. Shop drawings including location of all piping, electrical, instrumentation, and structural connections.

PART 2 – PRODUCTS

2.01 ACCEPTABLE MANUFACTURERS

The basis of design is Siemens. This statement, however, shall not be construed as an endorsement of a particular manufacturer's products, nor shall it be construed that named manufacturers' standard equipment or products will comply with the requirements of this section. Candidate products shall be Siemens or equal.

2.02 DESIGN CRITERIA

In no event shall the collector components be less than specified herein. Alternate manufactures shall submit complete design calculations in accordance with the Substitute Equipment Section of this specification.

2.03 EQUIPMENT

A. WIPER BADE AND SHAFTING:

The skimmer unit shall be constructed with dual spiral blades that will form a helix and shall be fastened to upright supports welded to a 5-inch diameter Schedule 40 pipe. Each blade shall rotate from opposite starting points about the center of the pipe to make a balanced unit. The blades shall be constructed of 3/16-inch Type 316 stainless steel ribbon, with Type 316 stainless steel backing plate and minimum ¼-inch thick neoprene (50/60 Durometer) wiper blade. The neoprene wiper blade shall be adjustable and fastened to the helix with 3/8-inch diameter Type 316 stainless steel carriage bolts. The blade will have a distinct discharge curve in the center to discharge the scum to the trough from the center of the blade.

End shafting shall be Type 316 stainless steel and of ample size to transmit the power required. Shafts shall be flange connected to Type 316 stainless steel pipe and assembled with Type 316 stainless steel bolts to allow removal of the helical skimmer without removing the end bearings. The flanged end shafts shall allow removal of the helical skimmer without removing the end bearings. The driving end shaft shall include a keyway with keys to secure the driven sprocket to the shaft.

B. BEARINGS:

Wall bearings shall be of cast iron construction, babbitted, self-aligning type with lubrication fitting and stainless steel lines extended to a point for easy access. Bearing shall be designed to allow for direct mounting to the wall without shimming or grouting.

C. BEACH PLATE:

The beach shall be fabricated of minimum ¼-inch thick Type 316 stainless steel plate, curved to match the radius of the helical skimmer, and shall be designed and constructed for mounting to the fabricated Type 316 stainless steel scum trough. The beach plate shall have a maximum deflection of 1/8-inch during typical operating conditions.

D. DRIVE SPROCKET CLOSURE PLATE:

A minimum ¼-inch thick Type 316 stainless steel plate shall be provided on the driven end to prevent scum from accumulating on the drive chain and driven sprocket. The bearing plate shall be attached to the tank walls or trough using Type 316 Stainless Steel anchors.

E. SCUM TROUGH:

The scum trough shall be fabricated of minimum ¼-inch thick steel plate and shall have a maximum of 1/8-inch deflection during typical operating conditions. The scum trough shall be flange mounted to concrete walls and shall include trough sleeves to line the bottom and side surfaces of the wall penetrations between tanks. The end flanges shall be field welded to both the troughs and sleeves to keep the troughs watertight long their entire length. The CONTRACTOR shall be required to seal all flanges, seams and sleeves to provide a watertight seal between the trough and tank walls.

F. DRIVE UNITS:

Each skimmer mechanism shall be operated by its own drive unit.

The motor shall be rated at ½-hp and 1.15 Service Factor, totally enclosed, fan cooled, ball bearing, constant speed of ample power for starting and continuously operating the mechanism under normal operating conditions without overloading. The motor shall conform to NEMA or IEC standards and be suitable for operation on 460 volts, 3 phase, 60 Hertz.

The speed reducer shall be of the helical gear type, fully housed, running in oil, with anti-friction bearings throughout. The speed reducer shall be designed and manufactured to AGMA standards and sized based on the calculated average scum and friction load of 2 lb per inch of effective blade to beach contact and have a 1.25 service factor. The minimum torque rating shall be 3,400 in-lbs.

The motor shall be directly connected to the speed reducer. V-belt drives will not be acceptable.

G. DRIVE BASE PLATE:

Each drive unit shall be supported by a stainless steel base plate. The base plate shall be designed to support the complete drive unit including forces encountered at the design torque overload protection setting.

H. DRIVE SPROCKET AND TORQUE OVERLOAD PROTECTION:

The drive sprocket shall consist of a polymeric plate section bolted to a cast iron driving hub. The sprocket plate section shall be molded of polyurethane as described under the collector chain sprocket section. The sprocket shall be not less than 9.26 inch pitch diameter and have 11 teeth.

The drive sprocket shall be provided with a shear pin device to provide for protection of the drive equipment in the event of excessive loading. Aluminum shear pins shall be provided to transmit torque from the driving hub to the sprocket shear plate with a polymeric gasket located between the shear faces to prevent seizing.

The driver sprocket hub shall be provided with a trip lug that, upon torque overload, shall contact the actuator arm of the double throw limit switch which, in turn, shall shut-off the motor and energize the alarm circuit. The limit switch shall be a combination NEMA 4X/7 enclosure and shall be provided with a stainless steel support bracket for positioning adjacent to the overload device. The audible alarm and silencing switch shall be furnished by the Electrical Contractor as detailed in Division 16.

I. DRIVEN SPROCKET:

The driven sprocket shall consist of a totally molded polymeric toothed rim and body. The sprocket shall be molded of high performance polyurethane. The sprocket shall be 13.37 inch pitch diameter and have 16 teeth and shall be keyed and set screwed to the drive shaft on the helical skimmer.

J. DRIVE CHAIN:

The collector drive chain shall be NH78 non-metallic, having 2.61 inch pitch links with an average weight of 1.4 lb/ft. The chain shall have a published working load not less than 1,750 lb, based upon strength and fatigue considerations. The chain links shall be manufactured of acetal resin and connected with 7/16-inch diameter stainless steel pins. The pins shall be constructed to prevent rotation and shall be held in place without the use of pins or cotters. Chains made of glass reinforced resins that require an abrasion resisting bushing to insulate the pin from the link barrel shall not be acceptable.

K. CHAIN GUARD:

The drive chain and sprockets located above the operating platform shall be covered with a removable metal guard of No. 14 gauge Type 304 stainless steel.

L. SHOP PAINTING AND FINISH FIELD PAINTING:

1. All iron and steel surfaces shall be blast-cleaned in accordance to SSPC-SP10 and shop primed in accordance with Division 9.

2. Finish field painting shall be in accordance with Division 9.

3. All pre-painted purchased equipment such as motors, reducers shall be furnished with original factory finish.

4. Shafting, machined and or polished surfaces shall be provided with a temporary protective coating of a nondrying oily-type rust preventive compound.

5. Fiberglass, plastic, aluminum, stainless steel and galvanized surfaces need not be coated.

M. ANCHORS AND FASTENERS:

All anchor bolts shall be Type 316 stainless steel furnished by the Manufacturer, of ample size and strength for the purpose intended. All anchor bolts shall be set by the Contractor in accordance with the Manufacturer's instructions.

All fasteners shall be Type 316 stainless steel, unless otherwise specified.

All field installed stainless steel fastener connections shall be made with an anti seize lubricant, designed to further reduce the possibility of galling.

N. ELECTRICAL CONTROLS:

Except for shear pin limit switch, no electrical controls are included in this section. Refer to Division 16 of these specifications.

PART 3—EXECUTION

3.01 INSTALLATION

The collector mechanism shall be erected and installed in strict conformance with the approved shop drawings and Manufacturer's installation instructions.

3.02 MANUFACTURER ON-SITE SERVICES

Provide Manufacturer service technician for start-up, field testing, verification of any final adjustments necessary for the contractor to complete and operator training.

Minimum service requirements:

1. Field testing, start-up, and operator training: one (1) trip totaling one (1) full day on-site.

A written report covering the technician's findings and installation approval shall be submitted to the Engineer covering all inspections and outlining in detail any deficiencies noted.

END OF SECTION

SECTION 11216

MECHANICAL MIX EQUIPMENT

PART 1--GENERAL

1.01 DESCRIPTION

A. SCOPE:

This section specifies mechanical mix equipment. Each mixer shall be a complete assembly with electric motor, gear reducer, shaft, impeller, and all specified appurtenances, mounted on a common pedestal base. In addition, the structural steel beams required to support and stabilize the mixer must be coordinated with the mixer details.

B. TYPE:

Mixers shall be vertical shaft submerged impeller type with a drive shaft connected to the main impeller shaft through a torsionally resilient flexible coupling. Impeller shafts shall be of the overhung design--underwater guides or bearings will not be accepted.

C. EQUIPMENT LIST:

Item	Equipment No.
Fermentation Tank Mixer 1-1	MX-3011
Fermentation Tank Mixer 1-2	MX-3012
Fermentation Tank Mixer 2-1	MX-3021
Fermentation Tank Mixer 2-2	MX-3022
Anoxic/Swing Tank 1 Mixer 1	MX-3013
Anoxic/Swing Tank 1 Mixer 2	MX-3014
Anoxic/Swing Tank 2 Mixer 1	MX-3023
Anoxic/Swing Tank 2 Mixer 2	MX-3024
De-Ox Basin 1 Mixer 1	MX-3031
De-Ox Basin 2 Mixer 1	MX-3032
Post Anoxic Tank 1	MX-3111
Post Anoxic Tank 2	MX-3112

D. PERFORMANCE AND DESIGN REQUIREMENTS:

Mixers shall be designed for use in the Fermentation Tank, Anoxic/Swing Tank, Post Anoxic Tank, and De-Ox Tank, which have the following dimensions and mixing requirements:

	Tank				
	Post Anoxic Tank	Fermentation Tank 1	Fermentation Tank 2	Anoxic/ Swing Tank	De-Ox Tank
Tank Width	N/A	21'–3"	21'–3"	21'–3"	15'–0"
Tank Length	N/A	21'–1"	20'–0.5"	42'–5"	40'–6"
Tank Depth	N/A	10.5	10.5	10.5	15.92'
Diameter	24'-0"	N/A	N/A	N/A	N/A

Mixers shall be designed for continuous-duty to fully mix the tanks and keep solids suspended. Specific design requirements are as follows:

	Equipment No.				
	De-Ox MX-3031 and MX-3032	Tank 1 MX-3011 and MX-3021	Tank 2 MX-3012 and MX-3022	Swing MX-3013, 3014 and MX-3023,3024	Post Anoxic MX-3111 and MX-3112
Motor, maximum HP	5	1	1	1	5
AGMA 6010-E service factor	2.0	2.0	2.0	2.0	2.0
Mixed Liquor Suspended Solids, mg/L	10,000	10,000	10,000	10,000	10,000
Minimum design water temperature, degrees F	68	68	68	68	68
Impeller diameter, inches	As Req.	As Req.	As Req.	As Req.	As Req.
Maximum impeller shaft speed, rpm	As Req.	As Req.	As Req.	As Req.	As Req.
Operating speed/first critical speed ratio, maximum	0.65	0.65	0.65	0.65	0.65
Minimum impeller shaft diameter, inches	As Req.	As Req.	As Req.	As Req.	As Req.
Mixer service platform elevation[1]	892.75	891.03	891.03	891.03	885.00

Impeller centerline elevation	As Req.	As Req.	As Req.	As Req.	As Req.

[1] Concrete base, grout, and base design may increase the actual mixer elevation. The Contractor shall confirm exact elevations with the manufacturer prior to shaft fabrication.

Each mixer (zone) shall be designed to provide a uniform MLSS concentration throughout the tank/zone. The design MLSS concentration is stated above for each zone. Uniformity is defined as plus or minus 10% of the arithmetic average of the MLSS concentration for all samples taken in the test zone. Performance testing for all mixers is required as specified herein.

1.02 QUALITY ASSURANCE

A. REFERENCES:

This section contains references to the following documents. They are a part of this section as specified and modified. Where a referenced document contains references to other standards, those documents are included as references under this section as if referenced directly. In the event of conflict between the requirements of this section and those of the listed documents, the requirements of this section shall prevail.

Unless otherwise specified, references to documents shall mean the documents in effect at the time of Advertisement for Bids or Invitation to Bid (or on the effective date of the Agreement if there were no Bids). If referenced documents have been discontinued by the issuing organization, references to those documents shall mean the replacement documents issued or otherwise identified by that organization or, if there are no replacement documents, the last version of the document before it was discontinued. Where document dates are given in the following listing, references to those documents shall mean the specific document version associated with that date, regardless of whether the document has been superseded by a version with a later date, discontinued or replaced.

Reference	Title
AFBMA Std 9	Load Ratings and Fatigue Life for Ball Bearings
AFBMA Std 11	Load and Fatigue Life for Roller Bearings
AGMA 250.04	Lubrication of Industrial Enclosed Drives
AGMA 297.02	Sound for Enclosed Helical, Herringbone, and Spiral Bevel Gear Drives
AGMA 390.03a	Gear Classification, Materials, and Measuring Methods for Bevel, Hypoid, Fine Pitch Worm Gearing and Racks Only as Unassembled Gears
AGMA 6010-E	Spur, Helical, Herringbone, and Bevel Enclosed Drives
AGMA 9002-A	Bores and Keyways for Flexible Couplings
AISI	Pocketbook of AISI Standard Steels

B. MANUFACTURER'S EXPERIENCE:

To be considered an equal, a manufacturer shall prove they have had equipment of the specified design in continuous service for not less than 5 years.

C. FACTORY TESTING:

The gear reducer housing shall be pressure tested for potential oil leaks before operation. The unit shall be run partially loaded at maximum speed for at least 2 hours after its oil temperature has stabilized. During this period, sound levels shall be measured at a distance of 3 feet away from the unit and recorded in accordance with AGMA 297.02. Regardless of gear speed, sound level shall not exceed 85 dBA. During the test period, the unit shall be monitored for oil leaks, excessive lubricant temperature, and excessive vibration. Any causes for leaks, excessive sound, vibration, or lubricant temperature shall be corrected before shipment. Near the end of the test, a suitable gear marking compound shall be added to the oil. Following the test run, oil shall be drained, inspection covers removed, and gear teeth shall be inspected for proper contact.

The manufacturer shall provide a brief letter report certifying that the unit has passed the specified test and inspection requirements. Lubricant shall be flushed and drained following the test and gear inspection in accordance with AGMA 250.04. After flushing the lubricant, the entire assembly shall be prepared for shipment in accordance with the manufacturer's recommendations.

1.03 ENVIRONMENTAL CONDITIONS

Mixers specified in this section will be installed outdoors. See Section 01800 for design ambient temperatures and conditions.

1.04 SUBMITTALS

The following information shall be provided in accordance with Section 01300:

1. A copy of this specification section, with addendum updates included, and all referenced and applicable sections, with addendum updates included, with each paragraph check-marked to indicate specification compliance or marked to indicate requested deviations from specification requirements. Check marks (✓) shall denote full compliance with a paragraph as a whole. If deviations from the specifications are indicated, and therefore requested by the Contractor, each deviation shall be underlined and denoted by a number in the margin to the right of the identified paragraph, referenced to a detailed written explanation of the reasons for requesting the deviation. The Construction Manager shall be the final authority for determining acceptability of requested deviations. The remaining portions of the paragraph not underlined will signify compliance on the part of the Contractor with the specifications. Failure to include a copy of the marked-up specification sections, along with justification(s) for any requested deviations to the specification requirements, with the submittal shall be sufficient cause for rejection of the entire submittal with no further consideration.

2. A copy of the contract document control diagrams and process and instrumentation diagrams relating to the submitted equipment, with addendum updates that apply to the equipment in this section, marked to show specific changes necessary for the equipment proposed in the submittal. If no changes are required, the drawing or drawings shall be marked *"no changes required"*. Failure to include copies of the relevant drawings with the submittal shall be cause for rejection of the entire submittal with no further review.

3. Manufacturer's product literature, dimensioned drawings of mixer layout, anchorage and base details, impeller diameter and details, shaft diameter and speed, and materials of construction.

4. Mixer weights and loads transmitted to the supporting structure and calculations for supporting structure indicating ability to resist said loads.

5. Manufacturer's experience statement as specified in paragraph 11216-1.02 B.

6. Statement by the manufacturer indicating that gears comply with AGMA standards, and bearings comply with AFBMA standards specified in this section.

7. Motor data as specified in paragraph 11060-1.03.

1.05 SHIPMENT AND STORAGE

Equipment shall be protected during shipping and storage prior to installation in accordance with Section 01605.

PART 2--PRODUCTS

2.01 ACCEPTABLE PRODUCTS

The mixer shall be manufactured and designed by Philadelphia Mixers Corporation, or approved equal to provide the specified features and to meet or exceed the specified operating requirements.

The proposed diffuser manufacturer selected to meet the process requirements must be specified with the bid documents. Calculations and evidence must be submitted if the Invent product is not selected to demonstrate that the performance will be as good as or better than that obtained with the Invent product. The following must be submitted at a minimum:

1. Calculations indicating that mixing as required by the specifications are obtained including keeping the solids form settling.

2. Details and calculations for the steel support structure.

3. A copy of this specification section marked up to show deviations and changes.

4. A description of changes required to the motor horsepower or a statement that no changes are required

5. The cost differential of providing something other than the Invent product.

2.02 MATERIALS

Materials of construction shall be as follows:

Component	Material
Shaft	**FRP or Steel**
Impeller	**FRP or Steel**
Miscellaneous wetted parts	**FRP or Steel**
Anchor bolts	**Stainless Steel**

Materials specified are considered the minimum acceptable for the purposes of durability, strength, and resistance to erosion and corrosion. The Contractor may propose alternative materials for the purpose of providing greater strength or to meet required stress limitations. However, alternative materials must provide at least the same qualities as those specified for the purpose.

2.03 EQUIPMENT FEATURES

A. GENERAL:

The mixer shall consist of a heavy-duty gear speed reducer, drive motor, support members, anchor bolts, shaft, and turbine impeller. Each drive shall have a horizontal input shaft and vertically downward output shaft. Outline dimensions and anchor bolt pattern shall be compatible with the installation conditions specified.

The mixers shall be designed and installed such that the mixer disk/impeller and shaft can be removed from the tank as a single unit and without dewatering the tank.

The mixer manufacturer shall coordinate with the tank cover manufacturer to ensure that the mixer will be adequately supported and that the mixer access hatches are sized and located properly for installation and removal of the mixing equipment. Typical locations are noted on the drawings, but these can be adjusted to suit the mixer installation and cover support requirements. The mixer manufacturer shall be required to review and approve the tank cover system shop drawings as related to mixer installation requirements.

B. GEAR REDUCER:

The gear drive shall comply with AGMA 6010-E. The AGMA calculated drive horsepower rating and service factor shall be stamped on the drive nameplate. The gear drive's minimum AGMA service factor shall be based on the motor's nameplate horsepower.

The drive housings shall be of high quality close-grained cast iron, or fabricated steel, stress relieved and reinforced, and shall be provided with lifting lugs. Removable covers shall be provided for inspection of all gears.

The gear drive shall have a combination of helical/spiral bevel gearing, change gear type. Drive gearing shall be Quality 10 or better as specified by AGMA 390.03a. Gear reducers shall be double or triple reduction as required. The ratio of any single gear set shall not exceed a 7:1 reduction. Use of gear motors and multiple, independent reducers will not be accepted.

The mixer gear drive shall be designed with an output shaft system suitable for the loadings imposed by the specified duty. Gearing shall be isolated from unbalanced hydraulic impeller loadings by separate impeller shaft bearings located above and below the main drive bearings. The impeller shaft shall pass through the drive's hollow quill drive shaft and shall be connected to the drive shaft through a torsionally resilient flexible coupling.

The gear reducer shall be splash lubricated from a common oil sump by a combination of oil slinger and gears immersed in oil. Units requiring an external oil cooling system will not be accepted. A dipstick and sight glass to measure oil level shall be provided. Oil leakage down the impeller shaft shall be prevented by a dry well feature. All oil fill and drain lines, and grease fittings, shall be easily accessible.

All bearings within the reducer shall be of the antifriction ball or roller type. All bearings other than those in the impeller shaft system shall have a minimum AFBMA L-10 life of 100,000 hours when operating continuously at the full rated load motor horsepower and speed. Output impeller-shaft bearings shall each have a minimum AFBMA L-10 life of 300,000 hours under the same full-load conditions. Bearings shall be splash oil lubricated or grease lubricated. All grease lubricated bearings shall have seals to prevent leakage.

C. DRIVE UNIT:

Each mixer shall be driven by a horizontal foot-mounted motor connected to the speed reducer through a flexible coupling, complete with coupling guard. Coupling and coupling guard shall comply with Section 11000 requirements. Motors shall be energy-efficient, Type 2, motors in accordance with Section 11060. Motor speed shall not exceed 1800 rpm.

D. PEDESTAL AND MIXER MOUNT:

The mixer shall be provided with an elevated pedestal and base plate which elevate the low speed coupling and oil drain above the mounting elevation. The rapid mixer shall be bolted to a reinforced base plate that spans an opening large enough for impeller removal without disassembly.

E. IMPELLER SHAFT AND LOW-SPEED COUPLING:

The impeller shaft shall be designed such that the maximum stress shall not exceed 8000 psi under maximum operating loads. The use of stabilizing rings or fins shall not influence this limitation. The shaft-impeller system shall be safe for operation when: the liquid level rises through the impeller while the mixer is operating; during deceleration and acceleration associated with a momentary power outage; and with unbalanced process flows that may be perpendicular to the shaft-impeller system. The entire system shall be hydraulically and dynamically stable during fluctuations in water levels commonly associated with turbulent mixing and with variations in process flow.

2.04 TOOLS AND SPARE PARTS

A. SPECIAL TOOLS:

Special tools, if required for normal operation and maintenance, shall be furnished with the equipment.

B. SPARE PARTS:

The following spare parts shall be provided for each size mixer:

1. Two complete sets of seals
2. Two complete sets of bearings
3. One spare gearbox for each size provided
4. One spare motor for each size provided
5. One spare shaft for each size provided
6. One spare mixing disk/impeller for each size provided

Spare parts shall be tagged and stored in compliance with paragraph 11000-2.12.

2.05 PRODUCT DATA

The following information shall be provided in accordance with Section 01300.

1. Applicable operating and maintenance information as specified in Section 01730.

2. Manufacturer's recommendations for installation.

3. Motor data as specified in paragraph 11060-2.05.

4. Maximum recommended lubrication temperature.

5. A statement by a licensed structural engineer indicating mixer supports are suitable to resist all forces imposed by the mixer when operating or when idle.

6. A statement by a licensed mechanical engineer indicating shaft-impeller critical speed, shaft stress, impeller stress, and horsepower are in compliance with the requirements specified.

7. Factory test certification as specified in paragraph 11216-1.02 C.

8. Installation Certification Form 11000-A as specified in paragraph 11216-3.01.

9. Training Certification Form 11000-B as specified in paragraph 11216-3.02.

PART 3--EXECUTION

3.01 INSTALLATION

The Contractor shall install the equipment in strict conformance with the manufacturer's recommendations. Installation shall be carried out by mechanics skilled in work of this kind, under the general supervision of a factory-trained representative of the manufacturer. Total shaft runout and deflection shall be checked by hand turning the shaft. Maximum shaft runout or deflection shall not exceed 1/8-inch per 10 feet of shaft length at any point along the shaft. The equipment shall be checked, aligned, tested, and placed in operation by a factory-trained manufacturer's representative, who shall complete and provide Form 11000-A specified in Section 01999.

3.02 OPERATION AND MAINTENANCE TRAINING

The Contractor shall provide the services of a factory-trained manufacturer's representative to provide training for a minimum of one day. Prior to final acceptance, the manufacturer's representative shall complete and provide manufacturer's Certification Form 11000-B, specified in Section 01999.

3.03 FIELD TESTING

A factory-trained representative shall test the installed equipment at full load and full speed for a minimum of 4 hours after oil temperature has stabilized. The reducer housing and shaft seals shall be checked for leaks during the test. Any leaks shall be corrected and the test repeated at the Contractor's expense. Oil temperature shall be recorded at intervals of no greater than 15 minutes and shall not exceed the manufacturer's recommended maximum. Sound level shall be recorded and shall not exceed 85 dBA at a distance of 3 feet from the equipment.

A. SUSPENDED SOLIDS TESTING:

1. A suspended solids test will be conducted by the mixer manufacturer to guarantee the performance of the mixers. The test shall be conducted in one fermentation tank and the anoxic tank.

2. The suspended solids test shall be conducted at or near design MLSS values for the process. The SVI shall be greater than 80 mL/L.

3. For each mixer (zone) tested, demonstrate that a uniform concentration of the MLSS is achieved at the end of a 30 minute test period with the mixer operating and no incoming flow. Uniformity is defined as plus or minus 10% of the arithmetic average of the MLSS concentration for all samples taken in the test zone.

4. A total of six samples shall be taken at locations selected by the Engineer. Sample locations shall be equally spaced horizontally and vertically within each zone. The maximum depth of any sample is 6 inches above the floor or 6 inches above the diffuser system if one is installed in that zone. Samples shall be collected a minimum of twelve inches from any wall.

5. Should any portion of the system fail to meet the requirements specified, the Contractor shall make any and all necessary modifications such that the system meets the requirements of this Specification at no additional cost to the Owner.

END OF SECTION

SECTION 11220

COARSE BUBBLE MIXING EQUIPMENT

PART 1--GENERAL

1.01 DESCRIPTION

A. SCOPE:

This section specifies coarse bubble mixing equipment for the distribution of agitation air to satisfy mixing requirements by maintaining solids suspension in mixed liquor suspended solids distribution channel and a thickened sludge holding tank. Two separate systems are required, one each for the following: the MBR Influent Channel Mixing, and thickened sludge holding tank. The equipment will be part of a new wastewater treatment system at the Little River WRF Expansion in Fulton County, Georgia.

The Supplier shall review the mechanical layout drawings to familiarize themselves with the location and the set-up of the equipment specified and shall assure themselves that the equipment specified is appropriate for and coordinated with what is shown on the contract drawings.

The blower sizing provided in Section 11300 is based on preliminary air supply requirements (flow rate requirements) from Sanitaire. The Contractor shall be responsible for coordinating the air supply required by the equipment to be purchased and installed with the MSS's scope of supply as described in Section 11300.

B. DEFINITIONS:

Standard cubic feet per minute (scfm) refers to air flow rate at standard conditions. Standard conditions shall be defined as 68 degrees F, 14.7 psia, and 36 percent relative humidity. Refer to paragraph 1.02-C for further information.

C. TYPE:

Coarse bubble diffusers shall be 304L stainless steel designed for municipal wastewater.

D. EQUIPMENT LIST:

Item	Equipment No.	Minimum No. of Diffusers
Thickened Sludge Holding Tank Diffuser	MXD-5091	11
MBR Influent Channel Mixing Diffuser	MXD-5010	22

E. PERFORMANCE REQUIREMENTS:

1. GENERAL: Equipment furnished under this section shall be designed to supply diffused air to provide sufficient mixing to maintain solids in suspension for each specified operating condition. The mixed liquor may consist of waste solids, organic solids, industrial solvents, emulsified oils and grease and detergents.

2. TANK CONFIGURATION AND PROCESS DESCRIPTION: The MBR influent channel is 55'-0" long by 3'-0" wide with an invert elevation of 893.00 feet. The water surface elevation will vary from 906.20 feet up to 906.22 feet. Flows will vary from a low of 1.9 million gallons per day up to a peak day flow of 13.8 million gallons per day. The flow will vary in the channel as flow is distributed to each MBR train currently on line.

The thickened sludge holding tank 28'-8" long by 11'-6" wide with an invert elevation of 884.75. The sidewater depth will range from 0 to 906.75 feet, and has an approximate hydraulic volume of 40,000 gallons. The water surface elevation shall vary depending on the amount of thickened sludge being stored. Thickened sludge is anticipated to be approximately 3% solids.

3. DIFFUSION EQUIPMENT CONFIGURATION: Diffusers shall be spaced as required by process requirements in each of the two systems identified. There shall be one piping header and drop legs for the channel mixing and a single grid for the thickened sludge application. Diffusers shall be arranged to allow space for walking and access to the diffusers.

F. ADDITIONAL SECTIONS AND PARAGRAPHS REQUIRED FOR COMPLIANCE:

The equipment specified in this section shall be provided in accordance with the following additional sections and paragraphs. This is not a comprehensive list of related and referenced sections and paragraphs and additional related and referenced sections and paragraphs requiring compliance may be specified throughout this section and within other sections. This list is provided as a convenience for the Supplier. Related and referenced sections shall be reviewed and submittal information provided as required in paragraph 1.03 of this section.

01300	Submittals
01605	Shipment, Protection and Storage
11300	Immersed Hollow Fiber Membrane Bioreactor Systems
11002	Rigid Equipment Mounts
15067	Stainless Steel Piping

1.02 QUALITY ASSURANCE

A. REFERENCES:

This section contains references to the following documents. They are a part of this section as specified and modified. Where a referenced document contains references to other standards, those documents are included as references under this section as if referenced directly. In the

event of conflict between the requirements of this section and those of the listed documents, the requirements of this section shall prevail.

Unless otherwise specified, references to documents shall mean the documents in effect at the time of the Invitation to Bid (or on the effective date of the Agreement if there were no Bids). If referenced documents have been discontinued by the issuing organization, references to those documents shall mean the replacement documents issued or otherwise identified by that organization or, if there are no replacement documents, the last version of the document before it was discontinued. Where document dates are given in the following listing, references to those documents shall mean the specific document version associated with that date, regardless of whether the document has been superseded by a version with a later date, discontinued or replaced.

Reference	Title
ASCE 2-91	Measurement of Oxygen Transfer in Clean Water
ASTM A240	Heat-Resisting Chromium and Chromium-Nickel Stainless Steel Plate, Sheet, and Strip for Pressure Vessels
ASTM A276	Stainless and Heat-Resisting Steel Bars and Shapes
ASTM A380	Standard Practice for Cleaning and Descaling Stainless Steel Parts, Equipment and Systems
ASTM A743	Castings, Iron-Chromium, Iron-Chromium-Nickel, Corrosion Resistant, for Severe Service
ASTM A774	AS-Welded Wrought Austenitic Stainless Steel Fittings for General Corrosive Service at Low and Moderate Temperatures
ASTM A778	Welded, Unannealed Austenitic Stainless Steel Tubular Products

B. UNIT OF RESPONSIBILITY:

The Supplier shall assume unit responsibility as specified in Section 11000-1.02C for supply of the equipment specified in this section. A certificate of unit responsibility shall be provided.

C. FACTORY TESTS: (NOT USED)

1.03 SUBMITTALS

The following information shall be submitted in accordance with section 01300.

1. A copy of this specification section, with addendum updates included, and all referenced and applicable sections, with addendum updates included, with each paragraph check-marked to indicate specification compliance

or marked to indicate requested deviations from specification requirements or those parts which are to be provided by the Supplier or others. Check marks (✓) shall denote full compliance with a paragraph as a whole. If deviations from the specifications are indicated, and therefore requested by the Supplier, each deviation shall be underlined and denoted by a number in the margin to the right of the identified paragraph, referenced to a detailed written explanation of the reasons for requesting the deviation. The Owner shall be the final authority for determining acceptability of requested deviations. The remaining portions of the paragraph not underlined will signify compliance on the part of the Supplier with the specifications. Failure to include a copy of the marked-up specification sections, along with justification(s) for any requested deviations to the specification requirements shall be cause for rejection of the entire submittal and no further submittal material will be reviewed.

2. A copy of the related mechanical, electrical, instrumentation drawings to the submitted equipment, with addendum updates that apply to the equipment in this section, marked to show specific changes necessary for the equipment proposed in the submittal. If no changes are required, the drawing or drawings shall be marked *"no changes required"*. Failure to include copies of the relevant drawings with the submittal shall be cause for rejection of the entire submittal with no further review.

3. Certificate of Unit Responsibility attesting that the Supplier has assigned unit responsibility in accordance with the requirements of this section and paragraph 11000-1.02 C. No other submittal material will be reviewed until the certificate has been received and found to be in conformance with these requirements.

4. Supplier's catalog information including diffuser type designation and operating characteristics.

5. List of materials and drawings with dimensions showing aeration piping system. The documents shall include locations of the diffusers, pipe supports, and expansion joints.

6. Certified calculations verifying that air flow per diffuser shall not vary greater than 5 percent within a grid during maximum and minimum air flow conditions. Diffuser system headloss calculations for each aerated cell verifying desired air distribution as per process oxygen requirements within 5% error in respective cells without manual adjustment of dropleg flow control valve adjustment.

7. Calculations showing normal buoyancy uplift forces and structural calculations to meet the requirements of paragraph 11220-2.03 E

8. For each condition specified in paragraph 11220-1.01 F, calculations showing the following information shall be provided:

   a. Total air flow required by the mixing system, scfm

   b. Air flow rate per diffuser, scfm/diffuser

   c. Pressure at top of drop pipe, psig (max. – min.)

   d. Dissolved oxygen

   e. Sludge %

9. Warranty and performance guarantee information.

10. Installation, testing and adjusting instructions.

1.04 SERVICE CONDITIONS AND ENVIRONMENT

The mixed liquor entering the channel will contain dissolved organics such as: chemical oxygen demand (COD) – 4,700 to 5,900 mg/L, biochemical oxygen demand (BOD) – 1,950 to 2,800 mg/L. The mixed liquor concentration will average approximately 16,000 mg/L (except for the thickened sludge which shall be 30,000 mg/L); pH levels will be maintained between 5.0 and 7.5.

1.05 WARRANTY AND PERFORMANCE REQUIREMENTS

Supplier shall provide following warranties for the specified equipment.

A one-year 100% parts and labor warranty against manufacturing defects or failure of the equipment specified in this section caused by normal wear and tear shall be provided. The warranty period shall start from the date of final acceptance of the equipment specified in this section. Decomposition or deformation resulting from chemical action, wear caused by the presence of abrasive materials, and replaceable or consumable material reaching its useful life, shall not constitute defects under the warranty.

1.06 SHIPMENT AND STORAGE

The equipment shall be protected during shipment and storage as specified in Section 01605.

PART 2--PRODUCTS

2.01 ACCEPTABLE PRODUCTS

Coarse bubble diffusion equipment for the thickened sludge holding tank shall be Sanitaire Model D-24 and for the MBR influent channel shall be Sanitaire Model D-12, Environmental

Dynamics (EDI), Ovivo, or Diffused Gas Technologies, modified to meet the requirements specified in this section.

The manufacturer shall have experience in design, manufacturing, supplying and commissioning of coarse bubble aeration equipment of the type specified for this project. The equipment quoted shall be a proven design and shall be referenced by at least twenty installations of similar size, having been in successful operation for a period of not less than five years.

2.02 MATERIALS

Component	Material
Diffusers	Stainless steel, ASTM A240, Type 304L; Schedule 80 minimum
Cast components	Stainless steel, ASTM A743, Grade CF-3
Piping and fittings	Stainless steel, ASTM A774 and ASTM A778, Type 304L; 12 gage minimum up to 4-inch diameter; Schedule 10S minimum for greater than 4-inch diameter
Piping supports, guides, and anchors	Stainless steel, ASTM A240 and ASTM A276, Type 316; Type 316L for welded components
Fasteners	Stainless steel, Type 316L

Materials specified are considered the minimum acceptable for the purposes of durability, strength, and resistance to erosion and corrosion. The Supplier may propose alternative materials for the purpose of providing greater strength or to meet required stress limitations. However, alternative materials must provide at least the same qualities as those specified for the purpose.

Stainless steel piping be supplied in accordance with Section 15067.

2.03 AIR DIFFUSION ASSEMBLIES

A. GENERAL:

Air diffusion assemblies shall consist of air distribution piping, supports, diffuser connectors, diffusers and appurtenances. The diffusion assemblies shall be restrained to prevent uplift. All pipe connections shall be reinforced with welded saddles for stress distribution. Air diffusion assembly as shown in the drawing and specified herein is based on Sanitaire; however other coarse bubble systems may be considered by the Owner.

B. AIR DISTRIBUTION PIPING:

Air distribution piping shall consist of the main air connection and headers. A loose follower flange for the connection of the drop leg to the main air distribution header shall be provided.

Headers and laterals shall be provided with removable end caps. Channel mixing application shall include the drop leg, isolation valve, lateral and diffuser.

C. SUPPORTS:

1. Assemblies shall be supported at intervals. Header supports shall include cradle, stand, and base plate and shall be mounted by anchor bolts conforming to the requirements of Section 11000-2.11. Each support shall have a cradle with a bearing surface contoured to fit a minimum of 90 degrees of the bottom of the air distribution header. The cradle shall be a minimum of 2 inches wide. All supports shall include a mechanism to provide for a minimum of 2 inches vertical and 1/2-inch lateral adjustment for alignment of the header. Guides shall be provided for directional control and self-alignment of the diffusion assemblies when lowered into the support cradles.

2. Provide each section of air header with a minimum of two supports with the maximum spacing between supports not to exceed 17 feet 6 inches.

3. Limit header or manifold cantilever to no more than 4 feet.

4. Provide header supports with a vertically adjustable header hold down locking mechanism mounted on a stainless steel supporting structure.

5. Provide header supports with a vertically adjustable header hold down locking mechanism mounted on anchor bolts cast into 4,000 psi reinforced concrete pedestals.

6. Design support hold down locking mechanisms with a minimum width of 2 inch and a minimum thickness of 0.109 inch on headers 12 inch diameter or smaller.

7. Design support hold down locking mechanisms using a "U" bolt smaller diameter and larger.

8. Provide supports with a mechanism to provide for ±2 inches of vertical adjustment and ±1/2 inch of lateral adjustment for alignment of the header in the field.

9. Provide a wall or floor mounted support near the drop pipe to header connection for vertical support and restraint of movement due to thermal expansion and to prevent blowing apart.

10. Anchor Bolts

    a. Design anchor bolts for embedment in 4,000 psi concrete with a pullout safety factor of 4.

    b. Attach supports to the tank with two stainless steel anchor bolts.

c. Provide a mechanical stainless steel expansion type anchor bolt system.

d. Provide a chemical bond adhesive stainless steel anchor bolt system with stainless steel threaded stud bolts.

D. DIFFUSER CONNECTORS:

The diffuser connectors shall be factory welded to the bottom centerline of the air distribution header. Welding of the connector to the header shall be by means of a full penetration butt weld. Use of fillet welds at the connection between the diffuser connector and header shall not be permitted. The diffuser connectors shall be on a common horizontal plane. Air release from the diffuser into the wastewater shall be at or below this common horizontal plane. The connectors shall be of such length and so positioned that the air exiting the diffuser shall clear the air header.

The headers and connectors shall be designed to resist a vertical load applied to the threaded end of the connector that results in a bending moment of 1,000 inch-lb without exceeding 24,000 psi design stress in any part of the header wall or connector. The header and both sides of the connector shall be reinforced by a continuously welded gusset. Gussets shall have a minimum cross sectional area of 0.125 square inch. All diffuser connectors shall have provisions for the placement of two diffusers.

E. DIFFUSERS:

Each diffuser shall consist of a balancing nozzle, an inverted air reservoir, air exit ports, cast end cap at inlet end and a full length deflector. The balancing nozzle shall be fitted with a replaceable inlet orifice designed to provide the performance characteristics specified in paragraph 11220-1.01 C. The air exit ports shall be located on horizontal planes on two levels to discharge air into the liquid. The deflector shall be located below the open bottom of the inverted air reservoir. The deflector shall direct the liquid being aerated along the inverted air reservoir's outer walls. Diffusers shall be designed to shear air into small bubbles as it is discharged and to prevent liquid from entering the air headers upon cessation of airflow. Each diffuser shall be provided with an integral hex nut and 3/4-inch threaded pipe connection for mating to the bosses attached to the air headers.

F. WELDING AND FINISHING:

All welding shall be done in the factory using MIG, TIG, or plasma-arc welding inert gas processes. Filler wire shall be added to all welds to provide for a cross section equal to or greater than the parent metal. Full penetration gas shielded butt welds shall be used for assembly. Interior weld beads shall be smooth, evenly distributed with an interior projection not exceeding 1/16 inch beyond the inner surface of the air header or fittings. Face rings and flanges shall be continuously welded, both sides. Field welding will not be permitted.

All outside weld areas shall be wire brushed to remove weld splatter. Brushes shall be of stainless steel and used only on stainless steel. After welding and brushing, all stainless steel

assemblies and parts shall be cleaned and descaled in accordance with the recommendations of ASTM A380.

2.04 SPARE PARTS AND SPECIAL TOOLS

Spare parts shall be tagged and stored as specified in paragraph 11000-2.12.

5 - diffusers, each size

2.05 PRODUCT DATA

The following product data shall be provided in accordance with Section 01300:

1. Operating and maintenance information specified in Section 01730.
2. Supplier's written recommendations for installation.
3. Installation certification form 11000-A as specified in paragraph 11220-3.01.
4. Training certification form 11000-B as specified in paragraph 11220-3.03.

PART 3--EXECUTION

3.01 INSTALLATION

Equipment shall be provided by the MSS and installed by the Contractor as shown and according to the manufacturer’s instructions. Recommended installation procedures shall be followed, including, but not limited to, installation of the pipe supports and leveling of the diffusers. All diffusers on a single air header shall be installed in a single horizontal plane within a tolerance of plus or minus 1/4 inch.

The equipment shall be installed and tested under the direction of a qualified manufacturer’s representative. The installation and initial operation shall be certified on Form 11000-A specified in Section 01999.

3.02 TESTING

Testing shall conform to the requirements of Section 01660 and those specified in this section.

After the piping, headers, and diffuser units for each tank have been installed, clear water shall be introduced into the tank by the Contractor until the diffuser units have been covered about 2 inches. Compressed air shall then be released through the diffuser units and any leaks and improperly aligned diffusers shall be repaired. This test shall be repeated until the entire system is airtight and properly aligned.

Final testing shall include operation of the assemblies with the tanks filled with clear water to the design operating depth. The Supplier shall pay for all costs for the Supplier to provide a trained representative on site to balance the system.

3.03 TRAINING

A minimum of 2 hours of training, as specified in Section 01664, shall be provided. Training shall be certified on Form 11000-B specified in Section 01999.

END OF SECTION

SECTION 11236

FINE BUBBLE DIFFUSION EQUIPMENT

PART 1--GENERAL

1.01 DESCRIPTION

A. SCOPE:

This section specifies fine bubble diffusion equipment for the distribution of aeration air to satisfy process oxygen requirements and to maintain solids suspension in a biological wastewater process.

The manufacturer shall review the mechanical layout drawings to familiarize themselves with the location and the set-up of the equipment specified and shall assure themselves that the equipment specified is appropriate for and coordinated with what is shown on the contract drawings. The manufacturer shall also review the relevant electrical plan and one-line diagram and the relevant process and instrumentation diagram drawing to ensure that the contract drawings are appropriate and coordinated with the equipment and controls specified.

B. DEFINITIONS:

Standard cubic feet per minute (SCFM) refers to air flow rate at standard conditions. Standard atmospheric conditions shall be defined as 68°F, 14.7 psia, and 36 percent relative humidity.

Effective diffuser area is defined as the horizontally projected perforated membrane area passing air at the specified conditions and excluding nonperforated membrane material.

Oxygen transfer rate (OTR) refers to mass of oxygen per unit time dissolved in a volume of water by an oxygen transfer system operating under given conditions of temperature, barometric pressure, power, gas rate and dissolved oxygen concentration.

Standard oxygen transfer rate (SOTR) refers OTR in clean water when dissolved oxygen (DO) concentration is zero at all points in the water volume, the water temperature is 20-degrees C and barometric pressure is 1 atm (101 kPa).

Oxygen transfer efficiency (OTE) refers to fraction of oxygen in an injected gas stream dissolved under given conditions of temperature, barometric pressure, gas rate and DO concentration.

Standard oxygen transfer efficiency (SOTE) refers to OTE in clean water when the DO concentration is zero at all points in the water volume, the water temperature is 20-degrees C and the barometric pressure is 1-atm (101 kPa).

Mixed liquor suspended solids (MLSS) concentration is the total suspended solids (TSS) concentration in an aeration basin.

C. TYPE:

Fine bubble diffusers shall be perforated flexible membrane diffusers designed for municipal wastewater applications.

D. DESIGN REQUIREMENTS:

1. GENERAL: Equipment furnished under this section shall be designed to supply diffused air to effect the removal of carbonaceous biochemical (and nitrogenous) oxygen demand from the mixed liquor in the aeration basin. The diffused air equipment shall provide sufficient mixing to maintain solids in suspension for each specified operating condition.

2. BASIN CONFIGURATION AND PROCESS DESCRIPTION: Fine bubble diffusion equipment provided under this specification shall be installed in the existing modified basins at the Little River WRF. Each aeration basin consists of a section of an existing oxidation ditch.

Aeration Basin Zone 1, 2 and 3 have a volume of approximately 0.248 million gallons each while Zone 4 has a volume of 0.164 Mgal.

3. DIFFUSION EQUIPMENT CONFIGURATION: Diffusers shall be spaced as required by process requirements in each of the aeration basin. There shall be one piping grid for each drop pipe shown. Diffusers shall be arranged to allow space for walking and access to the diffusers.

The diffuser manufacturer shall be responsible for aeration grid piping and for vertical aeration supply pipes (drop legs). Drop leg locations shall be as indicated on the Contact Drawings. All other items upstream of the droplegs, including the manual and automated control valves, are provided by others separately from the diffuser grids.

E. OPERATING REQUIREMENTS AND CHARACTERISTICS:

1. DIFFUSION EQUIPMENT OPERATING REQUIREMENTS: The diffusion equipment shall be designed for the following conditions:

Maximum diffuser height above floor, feet	0.78
Minimum diffuser submergence, feet	7.6
Maximum diffuser submergence, feet	8.5
Minimum basin air flux rate, scfm per sq ft of basin or channel area	0.12
Minimum clean water standard oxygen transfer efficiency ($SOTE_{cw}$) at maximum short-term air flow, percent (a)	24
Minimum ratio of diffuser headloss to piping headloss	10:1
Maximum top-of-drop leg pressure, psig	1
Maximum air temperature at top of drop pipe, degrees F	200

Diffuser headloss shall include both the diffuser element and the control orifice. Piping headloss shall include all losses upstream of the control orifice to the top of the drop pipe.

2. PROCESS OXYGEN REQUIREMENTS: Standard oxygen transfer rates for the aeration basin cells and design conditions are given in the table below. Standard conditions shall be interpreted to be a liquid temperature of 20 degrees C, an oxygen saturation value and oxygen transfer characteristics (K_{La}) equal to that of clean tap water at the same temperature, an average dissolved oxygen concentration of 0 mg/L, an alpha factor of 1.0, a beta factor of 1.0, and a temperature correction factor (theta) of 1.024. The diffusion equipment supplier's guaranteed clean water transfer efficiencies shall be used for the conversion of SOTRs to air flow (SCFM).

	Standard Oxygen Transfer Rates, kg O_2/d (per basin)			
	Condition			
Zone	Design Average	Maximum	Minimum	
1	833	1,129	717	
2	717	919	563	
3	622	868	459	
4	366	574	261	

3. ENVIRONMENTAL AND WASTEWATER CHARACTERISTICS: The general environmental and wastewater characteristics are listed below. The conditions listed below do not necessarily occur simultaneously and are provided to give the equipment supplier information regarding the range of expected conditions:

Parameter	Average	Maximum	Minimum
Chlorine Concentration, mg/L Cl	0.5	1.5	0
Atmospheric temperatures, degrees F	55	100	20
Atmospheric pressure, psia	14.6	14.6	14.6
MLSS temperature, degrees C	13.0	20.0	12.0
MLSS concentration, mg/L	8,000	16,000	1,500
Sludge age (SRT), days	12	16	3

1.02 QUALITY ASSURANCE

A. REFERENCES:

This section contains references to the following documents. They are a part of this section as specified and modified. Where a referenced document contains references to other standards, those documents are included as references under this section as if referenced directly. In the event of conflict between the requirements of this section and those of the listed documents, the requirements of this section shall prevail.

Unless otherwise specified, references to documents shall mean the documents in effect at the time of Advertisement for Bids or Invitation to Bid (or on the effective date of the Agreement if there were no Bids). If referenced documents have been discontinued by the issuing organization, references to those documents shall mean the replacement documents issued or otherwise identified by that organization or, if there are no replacement documents, the last version of the document before it was discontinued. Where document dates are given in the following listing, references to those documents shall mean the specific document version associated with that date, regardless of whether the document has been superseded by a version with a later date, discontinued or replaced.

Reference	Title
ASTM D1784	Rigid Poly (Vinyl Chloride) (PVC) Compounds and Chlorinated Poly (Vinyl Chloride) (CPVC) Compounds
ASTM D1785	Poly (Vinyl Chloride) Plastic Pipe, Schedules 40, 80, and 120.
ASTM D1869	Rubber Rings for Asbestos-Cement Pipe
ASTM D2564	Solvent Cements for PVC Pipe and Fittings
ASTM D2855	Making Solvent-Cemented Joints with PVC Pipe and Fittings
ASTM D3034	Type PSM Poly (Vinyl Chloride) (PVC) Sewer Pipe and Fittings
ASTM D3915	Poly (Vinyl Chloride) (PVC) and Related Plastic Pipe and Fitting Compounds

B. CLEAN WATER TESTS:

1. The fine bubble diffusion equipment shall be subjected to clean water testing witnessed by an independent engineer. Tests shall be conducted for each operating condition specified and at the wastewater depths specified in paragraph 11236-1.01 E.

2. The test tank shall be a minimum size of 100 sq ft and the test diffuser grid spacing shall mimic the proposed diffuser density. For strip type systems, equipment shall be oriented in the test tank to mimic an equivalent band-width to that proposed for the full-scale installation (i.e., test laterals' orientation with respect to the length or width of the test tank shall be consistent with the full-scale application). The test shall be sufficiently comprehensive to produce guaranteed performance characteristics. The test data shall be employed to produce operating curves having standard oxygen transfer efficiency and standard oxygen transfer rate plotted against air flow rate in scfm. Test logs, equipment serial numbers and operating curves shall be certified correct under penalty of perjury by an officer of the test engineer's corporation.

3. Testing shall be performed in accordance with the current ASCE Standard: "Measurement of Oxygen Transfer in Clean Water."

4. Diffusers used for the clean water shop test shall be from the same production batch that shall be used for the full scale installation.

5. Total dissolved solids (TDS) concentration shall not exceed 1,500 mg/L in any test run. Test results shall be normalized to a TDS concentration of 1,000 mg/L using the following formula:

$$SOTE_{1000} = SOTE_{test} * \exp(9.65e^{-5}*(1000-TDS))$$

where $SOTE_{1000}$ = normalized SOTE
$SOTE_{test}$ = SOTE determined in test run
TDS = actual TDS concentration in test run

6. All costs for the clean water test shall be borne by the Contractor. The Contractor shall pay travel and living expenses for three separate visits by the Engineer and two representatives of the Owner to manufacturer's fabrication facility to inspect and witness the factory test. The Contractor shall include the cost for complete witness testing as part of the bid. Expenses that shall be paid for by the Contractor include six (6) unrestricted roundtrip airfares from Atlanta, Georgia (3 persons, 2 trips per person), twelve (12) nights of hotel accommodations (2 persons, 2 trips per person, 2 nights per person per trip), four (4) days of car rental fees and fuel charges (1 vehicle, 2 trips, 2 days per trip), twelve (12) days of per diems (3 persons, 2 trips per person, 2 days per person per trip), and twelve (12) days of airport parking (3 persons, 2 trips per person, 2 days per person per trip). The Contractor shall furnish the Engineer with at least 6 weeks written notification of the time and location of the test.

7. Following shall be applicable for the factory tests and witness testing:

   a. The Engineer shall be permitted access to the equipment during fabrication and upon completion for the purpose of verifying compliance to the contract documents. The Engineer's inspection is not intended to replace the manufacturer's own quality control procedures.

   b. In no respect does inspection of any equipment by the Engineer relieve the manufacturer of compliance with the contract documents. A final inspection shall be performed by the Engineer when the manufacturer certifies that all the terms and requirements of the contract documents have been satisfied.

   c. Engineer shall be allowed to photograph the equipment while in-process and/or upon completion.

   d. Evidence of poor workmanship or lack of compliance with any aspect of the contract documents will be grounds for rejection of the equipment.

e. Subsequent repair of rejected equipment may, at the Engineer's option, be undertaken in an attempt to bring the equipment to an acceptable state. Repair procedures must be approved by the Engineer prior to implementation.

8. The Owner shall require a witnessed test for all specified factory tests. Accordingly, the Contractor shall furnish the Owner and Construction Manager with at least 6 weeks' written notification of the time and location of the test.

9. Two test result reports shall be provided to the Owner for review.

10. In the event the test results demonstrate that the diffusion equipment does not meet the specified requirements, the manufacturer shall modify the system and have it independently retested until the requirements are met. The additional cost to retest shall be borne by the Manufacturer. If, after a total of three tests the requirements are not met, the Owner shall have the option to reject the equipment.

C. EXPERIENCE OF MANUFACTURER:

The diffuser manufacturer shall have prior experience of at least three successful projects similar in nature and size as this project. Each of the prior projects shall have used a similar type of membrane diffuser as proposed for this project in the southeast United States of America region.

A description of the prior projects shall be included with the bid and shall document the following: Project name and location; client representative and telephone number; final acceptance date; and number and type of diffuser.

1.03 SUBMITTALS

The following information shall be submitted in accordance with Section 01300:

1. A copy of this specification section, with addendum updates included, and all referenced and applicable sections, with addendum updates included, with each paragraph check-marked to indicate specification compliance or marked to indicate requested deviations from specification requirements or those parts which are to be provided by the Contractor or others. Check marks shall denote full compliance with a paragraph as a whole. If deviations from the specifications are indicated, and therefore requested by the Contractor, each deviation shall be underlined and denoted by a number in the margin to the right of the identified paragraph, referenced to a detailed written explanation of the reasons for requesting the deviation. The Construction manager shall be the final authority for determining acceptability of requested deviations. The remaining portions of the paragraph not underlined shall signify compliance on the part of the Contractor with the specifications. Failure to include a copy of the marked-up specification sections, along with justification(s) for any

requested deviations to the specification requirements shall be cause for rejection of the entire submittal and no further submittal material will be reviewed.

2. A copy of the contract document control diagrams and process and instrumentation diagrams and mechanical layout drawings relating to the submitted equipment, with addendum updates that apply to the equipment in this section, marked to show specific changes necessary for the equipment proposed in the submittal. If no changes are required, the drawing or drawings shall be marked *"no changes required"*. Failure to include copies of the relevant drawings with the submittal shall be cause for rejection of the entire submittal with no further review.

3. Manufacturer's catalog information including diffuser type designation and operating characteristics.

4. List of materials and drawings with dimensions showing aeration piping system. The documents shall include locations of the diffusers, pipe supports, expansion joints, and water purge system. Pipe supports and anchor bolts shall be certified by a registered professional engineer in the State of Washington.

5. Calculations verifying that air flow per diffuser shall not vary greater than 5 percent within a grid during maximum and minimum air flow conditions.

6. Calculations showing normal buoyancy uplift forces and structural calculations to meet the requirements of paragraph 11236-2.03 D.

7. Relationship between standard oxygen transfer efficiency (SOTE) and diffuser air flow rate for each grid.

8. For each condition specified in paragraph 11236-1.01 E.2, the following information shall be provided:

   a. Standard oxygen transfer efficiency, percent
   b. Total air flow required by the aeration system, scfm
   c. Air flow rate per unit area, scfm/sq ft and per grid
   d. Pressure at top of drop pipe, psig

9. Clean water data, along with standard test conditions, used as basis for standard oxygen transfer rate (SOTR) with 10 – 20% fouling factor in SCFM, SOTR and head loss..

10. Documentation form the independent test engineer or manufacturer’s testing facility stating competence and capacity to perform the required tests under paragraph 11236-1.02 B.

11. Installation, testing and adjusting instructions.

1.04 SEISMIC ANCHORAGE AND STRUCTURAL DATA

Mechanical, instrumentation and control, electrical, nonstructural systems, components, and elements permanently attached to the structure shall be anchored and braced to resist seismic forces. Contractor shall design the structural components, seismic attachment, braces, and anchors to the structure for all parts or elements of the mechanical and electrical systems in accordance with Section 01900.

1.05 SPECIAL WARRANTY

The manufacturer shall provide a warranty, which shall extend three years from the date the equipment is delivered to the site or two years from the date commissioning is completed, whichever ends sooner. If the equipment loses 0.5 psi within 2 years of installation, the manufacturer shall replace the entire equipment at no additional cost to the Owner. If the equipment loses 0.5 psi within 7 years of installation, then the manufacturer shall provide a prorated price replacement of the diffuser equipment. The pressure for the loss shall be as measured on pressure taps provided by the manufacture and using the procedure as described in 3.02.D, below. The manufacturer may confirm the pressures in the field to verify the Owner's application of the special warranty conditions.

PART 2--PRODUCTS

2.01 ACCEPTABLE PRODUCTS

The basis of design is Ovivo/Aerostrip. This statement, however, shall not be construed as an endorsement of a particular manufacturer's products, nor shall it be construed that named manufacturers' standard equipment or products will comply with the requirements of this section. Candidate products shall be Ovivo Aerostrip, the Sanitaire Gold Series diffusers or equivalent by EDI or Invent.

The proposed diffuser manufacturer selected to meet the process requirements must be specified with the bid form. Calculations and evidence must be submitted if the Sanitaire, EDI or Invent product is selected to demonstrate that the performance will be as good as or better than that obtained with the Aerostrip product. There shall be no additional cost to the Owner should the contractor select the Sanitaire Gold Series diffuser or equivalent EDI or Invent product. The following must be submitted at a minimum:

6. The results of clean water tests demonstrating standard oxygen transfer efficiency.

7. A copy of this specification section marked up to show deviations and changes.

8. A description of changes required to the blowers providing air to the diffusers and a statement that the contractor has included costs for any such changes in their bid or a statement that no changes are required.

2.02 MATERIALS FOR DIFFUSER SYSTEMS

Materials of construction shall be as follows:

Component	Material
Drop piping:	
Upper drop pipe	Schedule 10 Stainless steel, AISI 304L, conform to ASTM A-477 and A-478.
Lower drop pipe	Schedule 40 PVC, conform to ASTM D-1784 and D-1785. High density polyethylene (HDPE) (for ME 2206 only)
Submerged air manifolds	Sch. 40 polyvinyl chloride (PVC) with minimum 1 percent TiO_2 ultraviolet light inhibitor. Carbon black PVC is acceptable as a substitute for manifold with a diameter greater than 4 inches. Conform to ASTM D-1784 and D-0085.
Piping supports and anchors	Stainless steel, AISI 316L for welded components; AISI 304 for non-welded
Piping gaskets	Neoprene, 45 to 55 durometer, polyisoprene, ASTM D1869-78
Fasteners	316 Stainless steel or Inconel
Diffuser membrane	Polyurethane
Base plate	Type 316 stainless steel or PVC
Connector to header	Braid reinforced PVC or HDPE (piping), polypropylene (compression fitting)

Materials specified are considered the minimum acceptable for the purposes of durability, strength, and resistance to erosion and corrosion. The Contractor may propose alternative materials for the purpose of providing greater strength or to meet required stress limitations. However, alternative materials must provide at least the same qualities as those specified for the purpose.

2.03 EQUIPMENT FEATURES

A. GENERAL:

The air distribution piping system shall be designed for field installation or adjustment by the Owner’s staff with training and include provisions for level adjustment, for rotational adjustment of the distribution headers, and for thermal expansion of all piping elements. All welding shall be done in the manufacturer's shop. Field welding will not be permitted. It is the diffuser manufacturer’s responsibility to apply high-temperature tolerant glue in the aeration grid where necessary for wastewater conditions as specified in paragraph 11236-1.01 E.3.

B. DROP PIPING:

Each aeration cell shall have one or more drop pipes, of the size and at the location shown on the drawings. Each drop pipe shall be suitably supported at its upper connection and along the basin wall.

C. DISTRIBUTION HEADERS:

Each distribution header shall connect to aerators via 304 Stainless Steel piping, with the air supplied to the aerator through a fitting on top of the aerator. Headers shall be joined by flanges or threaded union type joints.

Bell and spigot joints are not acceptable. Maximum spacing of supports shall be 8 feet.

D. PIPING SUPPORT AND ANCHORS:

The support system shall securely anchor the manifold and distribution headers to the tank floor. The supports shall be secured to the floor with anchor bolts. The minimum diameter of any fixing rod type support shall be 1/2 inch and the minimum thickness of steel plate support shall be 3/16 inch. The minimum diameter of any guide type rod supports shall be 5/16-inch-diameter. Each support shall have a minimum 1-1/2-inch wide full circumferential bearing surface contoured to fit the pipe being supported. The supports shall be attached to a rod with a minimum clearance of 3/8 inch, attached to the concrete floor. Each rod anchors to the concrete by a chemical adhesive designed for long-term wet base conditions. Worm gear clamps shall not be permitted. All supports shall include a method to provide for vertical, lateral and angular alignment adjustment to allow level installation. Supports shall be designed, manufactured and installed in such a manner that the horizontal surfaces of all diffuser elements are within plus or minus 1/4 inch of a common horizontal plane. After the pipe has been installed and leveled, all adjusting mechanisms shall lock in place.

Anchor bolts for grid piping shall be designed for at least 10 times the normal buoyancy uplift forces. Maximum pipe support spacing shall be 8 feet. The pipe support system shall be designed to allow for pipe expansion and contraction over the entire range of specified conditions.

E. DIFFUSER ASSEMBLIES:

The aerator frame shall provide support for the strip aerator membrane and be structurally self-sufficient. In addition to securing the entire perimeter of the membrane with an airtight sealing mechanism, the frame shall provide the necessary mechanism for even distribution of air. No fasteners shall be allowed to penetrate the membrane. The membrane shall be secured to the PVC base using polyamide tubing.

Air shall be supplied through a nipple on the end of the diffuser. The diffuser shall be anchored by molded elements of polypropylene secured by standard bolts, nuts and anchors of 316 stainless steel.

2.04 STANDBY COMPONENTS

Distribution headers shall be provided with taps and plugs for five percent additional diffusers. All diffusers and associated hardware required to use the five percent spare taps shall be provided as standby components.

In addition to the standby components listed previously, the Contractor shall furnish and identify separately in the bill of materials a nominal quantity of standby components for the Contractor's use to cover loss, breakage, and replacement.

All spare elements and plugs shall be stored and protected in accordance with Section 11000.

2.05 PRODUCT DATA

The following information shall be provided in accordance with Section 01300.

1. Applicable operating and maintenance information specified in Section 01730.

2. Manufacturer's Installation Certification Form 11000-A specified in paragraph 3.01.

3. Detailed installation requirements and start up procedures.

4. Copies of all factory test conditions and results.

5. Catalog information for all components, materials list, and additional information describing the conformance of the proposed equipment with design and operating requirements of this section.

PART 3--EXECUTION

3.01 INSTALLATION

The Contractor shall install the number of diffuser elements required for the initial layout. All unused diffuser holders and taps shall be plugged.

Equipment provided under this section shall be installed in conformance with the manufacturer's instructions. In addition, pipes shall be installed a set distance from the end to ensure that when inserted into the compression couplings, the pipe ends are centered within the coupling. Prior to connecting the diffuser to the headers, the Contractor shall clean all piping, headers, and accessories through which air is delivered, so that all dust, dirt, and foreign matter is effectively removed from contact. The cleaning shall be done in clean water at an air velocity of 2,000 to 3,000 ft/min. All diffusers shall be leveled to within 1/4-inch of a common horizontal plane. After the requirements of paragraph 11236-3.03 have been fulfilled, unless otherwise directed by the Owner or Construction Manager, the aeration basins shall remain filled with plant water to

protect the installed diffuser system. A factory-trained manufacturer's representative shall be on-site to assist, supervise, and inspect the Contractor's activities during installation of diffusers. The installation shall be certified on Form 11000-A specified in Section 01999.

3.02 FIELD QUALITY CONTROL

A. GENERAL:

The fine bubble diffusion equipment shall be subject to field testing as specified in Section 01660. The following tests for leveling, leakage, distribution of flow, and operating pressure shall be coordinated with the requirements of Section 01660. A factory-trained manufacturer's representative shall be on-site to lead these tests and supervise and inspect the Contractor's activities. All costs for field testing shall be borne by the Contractor.

B. LEVELING TESTS:

Plant water shall be introduced into each aeration tank to the top of the diffuser elements. The level of the diffusers shall then be checked to document that all element horizontal surfaces are within 1/4 inch of a common horizontal plane at a diffuser height above floor no higher than that specified in paragraph 11236-1.01E.1.

C. LEAKAGE AND AIR FLOW DISTRIBUTION TESTS:

After successful completion of the leveling tests, the water level shall be raised to 2 inches above the diffusers. Air shall then be introduced into the system. The water surface shall be visually inspected to ensure that the air flow is uniformly distributed across the tank. Any leaks in the element holders, elements, pipes, or the like shall be repaired by the Contractor. The test shall be repeated until a representative of the Construction Manager and the manufacturer witness that the installation is void of air leaks.

D. OPERATING PRESSURE TESTS:

The Contractor shall place each basin in operation with plant water to the average design operating depth calculated from the minimum and maximum values specified in paragraph 11236-1.01 E1. Each grid shall be tested at the minimum and maximum air flow values corresponding to the conditions specified in 11236-1.01 E.2. The pressure shall be measured and tested in each drop leg and the results shall be recorded and given to the Owner. The maximum value shall be in compliance with the requirements set forth in paragraph 11236-1.01E.1. All required pressure sensing devices and taps shall be provided by the equipment manufacturer. The manufacturer shall provide a procedure so that the Owner may periodically measure pressures using the taps and similar devices to monitor compliance with Special Warranty conditions.

E. FAILURE TO DEMONSTRATE ACCEPTABLE OPERATING PRESSURE:

If the field tests fail to demonstrate that the diffusion equipment distributes air flow uniformly in the opinion of the Design Engineer or Construction Manager and meets maximum operating pressure requirements as specified, additional equipment shall be provided at no additional expense to the Owner for modifications made to remedy the deficiency. It is agreed by both the

Contractor and the Manufacturer that the equipment must provide the specified requirements prior to acceptance by the Owner. It is also understood that the equipment shall be completely retested after addition or modification at no expense to the Owner. Modifications and additional equipment will be provided, and retesting performed at no cost to the Owner. All structural, piping, electrical, and other modifications necessary to accommodate additional or modified equipment shall be made at the Contractor's expense.

3.03 TRAINING

A minimum of 8 hours of training in two 4-hour sessions to accommodate the shift schedules of operation and maintenance staff shall be provided. Training shall conform to Section 01664 and shall be certified on Form 11000-B specified in Section 01999.

END OF SECTION

SECTION 11300

IMMERSED HOLLOW FIBER MEMBRANE BIOREACTOR SYSTEMS

PART 1—GENERAL

1.01 DESCRIPTION

A. SCOPE:

This Section specifies the requirements for the immersed membrane system supplier (MSS) to provide an immersed hollow fiber membrane system for the treatment of municipal wastewater and the thickening of waste activated sludge (WAS) complete and operational with all control equipment and accessories as shown on the drawings and specified herein. Including all labor, materials, equipment and incidentals required to provide fully functioning treatment systems.

1. Engineering Services shall be provided under this Contract for project related activities including: equipment and drawing submittals, technical and engineering services, and other engineering services required for the MSS to provide complete and operable systems.

2. MSS's shall provide under this Contract all project related activities including: engineering, O&M manuals, installation, commissioning and acceptance testing field services and operator training necessary for the installation of each system as described within the Contract Documents.

3. The MSS may, at no additional cost to the owner, provide a single membrane treatment system for both the wastewater and thickening application. All engineering and coordination for a single system shall be provided by the MSS and contractor at no additional cost to the owner.

4. If a single membrane treatment system is provided, the contractor and MSS shall be responsible for the coordination of the design and installation of the membrane system within the space and general locations as shown in the drawings. There shall be no additional cost to the Owner or Engineer for providing a single system.

5. This specification represents the minimum design, equipment, and materials for the MSS's proposed design

Unless specified otherwise, the wastewater membrane treatment system shall include, but not be limited to the following minimum system components:

1. Membrane Modules or Cassettes as specified hereinafter.

2. Membrane Module Support Frames as specified hereinafter.

3. Permeate Pumps and accessories.

4. Backpulse Storage Tank and accessories.

5. Air Scour Blowers and accessories.

6. Citric Acid chemical metering pumps and accessories.

7. Sodium Hypochlorite chemical metering pumps and accessories.

8. Valves as specified in Division 15 and as shown on the process and instrumentation Drawings.

9. Pneumatically actuated butterfly valves.

10. Air Compressor and desiccant dryer equipment.

11. Flow and pressure measurement equipment.

12. Controls and Instrumentation as specified hereinafter.

13. Membrane basin inlet flow deflector plate.

14. Motor Control Center (MCC-MBR) and Variable Speed Drives shall be provided in accordance with Div. 11 and Div. 16 specifications. MCC-MBR shall be supplied by the same manufacturer as MCC's provided under Div. 16.

Unless specified otherwise, the thickening membrane treatment system shall include, but not be limited to the following system components:

1. Membrane Modules.

2. Membrane Module Support Frames.

3. Permeate Pump and accessories.

4. Backpulse Storage Tank.

5. Air Scour Blower and accessories.

6. Sludge Thickening Hose Pump.

7. Citric Acid chemical metering pumps and accessories.

9. Valves as specified in Division 15 and as shown on the process and instrumentation Drawings.

10. Pneumatically actuated butterfly valves.

11. Air Compressor and desiccant dryer equipment

12. Flow and pressure measurement equipment.

13. Controls and Instrumentation as specified hereinafter.

14. Inlet deflector plate, if required.

15. Motor Control Center (MCC-MBR) and Variable Speed Drives shall be provided in accordance with Div. 11 and Div. 16 specifications. MCC-MBR shall be supplied by the same manufacturer as MCC's provided under Div. 16.

16. Coarse bubble mixing equipment.

1.02 QUALITY CONTROL / QUALITY ASSURANCE

A. MANUFACTURER'S QUALIFICATIONS:

All equipment furnished under this specification shall be new and shall be the standard product of a manufacturer who is fully experienced, reputable, qualified and regularly engaged in the manufacture of the membrane modules and supply of the system to be furnished.

B. REFERENCE STANDARDS:

Comply with applicable provisions and recommendations of the following, except as otherwise shown or specified:

1. American Society of Mechanical Engineers (ASME)

   a. ASME Boiler and Pressure Vessel Code

2. American Society for Testing and Materials (ASTM)

   a. ASTM A 193 – Standard Specification for Alloy-Steel and Stainless Steel Bolting Materials for High-Temperature Service

   b. ASTM A 36, Standard Specification for Structural Steel

3. American National Standards Institute (ANSI)

   a. ANSI B16.5 – Pipe Flanges and Flanged Fittings

b. AWS D10.9, Standard for Qualification of Welding Procedures and Welders for Piping and Tubing

4. American Welding Society (AWS)

a. AWS A5.9 – Specification for Bare Stainless Steel Welding Electrodes and Rods

b. AWS D1.1 – Structural Welding Code – Steel

c. AWS D10.9 – Standard for Qualification of Welding Procedures and Welders for Piping and Tubing

5. Hydraulic Institute (HI)

6. Institute of Electrical and Electronic Engineers (IEEE)

7. National Electrical Code (NEC)

8. National Electrical Manufacturers Association (NEMA)

9. Standards of National Electrical Manufacturers Association

10. Standards of American Water Works Association (AWWA)

11. Underwriter's Laboratory (UL)

12. National Sanitation Foundation (NSF)

C. MANUFACTURER'S QUALITY ASSURANCE / QUALITY CONTROL PROGRAM:

The manufacturer shall have in place a dedicated quality control/quality assurance program that conforms to ISO-9000 / ISO-9001.

1.03 SUBMITTALS

The following information shall be provided in accordance with Section 01300:

1. A copy of this specification section, with addendum updates included, and all referenced and applicable sections, with addendum updates included, with each paragraph check-marked to indicate specification compliance or marked to indicate requested deviations from specification requirements. Check marks (✓) shall denote full compliance with a paragraph as a whole. If deviations from the specifications are indicated, and therefore requested by the Contractor, each deviation shall be underlined and denoted by a number in the margin to the right of the identified paragraph, referenced to a detailed written explanation of the

reasons for requesting the deviation. The Engineer shall be the final authority for determining acceptability of requested deviations. The remaining portions of the paragraph not underlined will signify compliance on the part of the Contractor with the specifications. *Failure to include a copy of the marked-up specification sections, along with justification(s) for any requested deviations to the specification requirements, with the submittal shall be sufficient cause for rejection of the entire submittal with no further consideration.*

2. A copy of the contract document control diagrams and process and instrumentation diagrams relating to the submitted equipment, with addendum updates that apply to the equipment in this section, marked to show specific changes necessary for the equipment proposed in the submittal. If no changes are required, the drawing or drawings shall be marked "no changes required". *Failure to include copies of the relevant drawings with the submittal shall be cause for rejection of the entire submittal with no further review.*

3. A copy of the contract document mechanical and structural drawings relating to the submitted equipment, with addendum updates that apply to the equipment in this section, marked to show specific changes necessary for the equipment proposed in the submittal. If no changes are required, the drawing or drawings shall be marked "no changes required". Failure to include copies of the relevant drawings with the submittal shall be cause for rejection of the entire submittal with no further review.

4. Certificate of Unit Responsibility attesting that the Contractor has assigned, and that the manufacturer accepts, unit responsibility in accordance with the requirements of this Section and paragraph 11000-1.02 C. *No other submittal material will be reviewed until the certificate has been received and found to be in conformance with these requirements.*

5. Design calculations used to determine the number and size of each equipment item in the MSS's scope of supply. At a minimum, calculations shall be provided for the cassettes, modules, air scour blowers, backpulse system (including tank sizing), chemical feed pumps (and tanks), and pumps being proposed for the complete system using the design data in section 11300-1.04.

6. Manufacturer's catalog data confirming rated design capacity, horsepower, and electrical requirements for each piece of equipment in the MSS's scope unless multiple items have an equally rated design capacity.

7. Dimensional drawings for all equipment.

8. Parts list with materials of construction.

9. Motor data submittal in accordance with Section 11060 for each motor.

10. Detailed installation drawings, showing the size and location of all piping, electrical, instrumentation, and structural connections. Drawings shall include the MSS's recommended membrane basin concrete coating system which shall be supplied and installed by the contractor.

11. Shop drawings including location of all piping, electrical, instrumentation, and structural connections.

B. FACTORY TEST REPORTS:

1. MSS shall submit the following quality control reports:

   a. Factory Test and MSS Quality Control Reports for all equipment provided including the Factory Test Report for the PLC / HMI system functional performance test reports.

   b. Factory Test Reports for all Control Panels

2. MSS shall submit the following 14 days prior to delivery of any of the membrane modules:

   a. The MSS shall identify each membrane module by a unique serial number.

   b. The MSS shall provide the membrane specification sheets that specify each membrane modules normalized specific flux (gpm-cp/psi), nominal pore size, and the nominal inside and outside surface area of the filter module.

   c. Certification of wet testing for each membrane module conducted at the MSS's facilities. The MSS shall identify membrane module serial number. The MSS shall certify that each membrane module has passed the quality assurance/quality control tests for membrane element integrity. Acceptable quality assurance and quality control tests for hollow fiber membranes include bubble point or pressure hold tests above the minimum value recommended by the MSS and mutually agreed upon by the Engineer.

C. INSTALLATION INSTRUCTIONS:

1. MSS shall perform a visual inspection of the site to confirm actual field conditions support the delivery of the MSS's equipment. MSS shall submit installation instructions to the contractor 30 days prior to shipment of any equipment.

2. For each shipment, MSS shall provide the listing of the equipment to be delivered prior to the delivery of the equipment.

D. COMMISSIONING PLAN:

1. MSS shall provide the “Detailed Plan of Commissioning Activities” prior to commencement of Commissioning of the membrane system or it’s ancillary systems.

E. OPERATIONAL AND MAINTENANCE (O&M) MANUALS:

MSS shall provide INSTALLATION, PRELIMINARY and FINAL Operational and Maintenance (O&M) Manuals for the wastewater and thickening application for use by the Contractor and the Owner. O&M Manual shall be submitted according to the requirements of this specification and section 01730. Final approved O&M Manual shall be submitted electronically in the documents original format. Electronic format shall be in the most recent release of Excel, Word, AutoCAD and shall be incorporated into the Owners CMMS system.

1. The term "Operation and Maintenance Manual" includes all product related information and documents which are required for preparation of the Membrane System O&M Manual, and data that is required for inclusion by current regulations of any participating government agency or as a provision of a membrane system warranty.

2. Failure to provide the INSTALLATION, PRELIMINARY and FINAL Operational and Maintenance (O&M) Manuals as required by this Section within the allocated time shall constitute a failure of the MSS to provide Special Services in accordance with the requirements of the Contract. Required Delivery for O&M Manuals shall be 45 days prior to starting the activities described in each O&M Manual.

3. The term component equipment supplier is used to describe a manufacturer’s equipment purchased by the MSS and incorporated into the Membrane System.

4. The O&M Manual shall include, but not be limited to, the following:

a. Equipment function, operating characteristics, limiting conditions, operating instructions and procedures for startup, normal and emergency conditions, shutdown and storage

b. Safety considerations relating to installation, operation and maintenance procedures

c. Installation procedures

d. Calibration procedures

e. Routine and preventive maintenance instructions

f. Procedures for disassembly, reassembly, alignment, adjustment, and inspection instructions

g. Recommended spare parts list to maintain equipment in service

h. Special Tools:
   1) For MSS equipment, provide list of special tools included and required for installation checking, testing, parts replacement, and maintenance
   2) For component equipment, a list of special tools, materials, and supplies furnished with equipment for use prior to and during startup and for future maintenance with current price information

i. For component equipment provide name, address and telephone number for local sources of equipment and/or replacement parts

j. Operational log sheets and maintenance schedules

k. Material Safety Data Sheets (MSDSs) for any applicable item (chemicals, oils, lubricants, etc.) provided by the MSS

l. Furnish lubricants of the type and grade necessary to meet the requirements of the equipment. Provide lubricants that are NSF Standard 61 approved as food grade and that are compatible for use in public water supplies

m. Warranty Information, Bond(s), and Service contract(s), if applicable

n. Equipment Specific and Factory Test Report information shall include:
   1) Tag name, model and serial number of the equipment provided
   2) Name, address, and phone number of manufacturer, manufacturer's local service representative
   3) Factory test reports where applicable
   4) Approved shop drawings (including equipment drawings, schematics, circuit diagrams)

5. Routine and preventive maintenance instructions include all information and instructions required to keep equipment properly lubricated, adjusted, and maintained so that the item functions as intended throughout its full design life. Routine and preventive maintenance instructions shall include, but not be limited to, the following:

a. Written explanations with illustrations for each preventive maintenance task

b. Recommended schedule for execution of preventive maintenance tasks

c. Lubrication charts shall include a table of alternative lubricants naming at least two alternate lubricant manufacturers, with applicable product numbers, for each application

d. Troubleshooting instructions

e. List of required maintenance tools and equipment

f. Safety equipment including any platform needed for membrane inspection / repair

F. TRAINING MANUALS:

1. The MSS shall develop and submit to the Engineer and Owner a Training Manual. The Training Manual shall include the elements presented in this Section or as required by the MSS or component equipment supplier.

2. The MSS shall prepare a Training Lesson Plan, provide qualified instructors, and schedule the training in an organized manner.

a. All training material shall be provided to the Owner in electronic format. Final approved Training Manual shall be submitted electronically in the documents original format. Electronic format shall be in the most recent release of Excel, Word, or AutoCAD .

b. Training shall be video taped and provided to the owner in reproducible format on a DVD. Minimum video quality shall be in HD (720p, 1080i, 1080p) and provided in readily reproducible consumer file format. Two copies are to be provided - one on each of two external hard drives.

G. RECORD DRAWINGS:

After completion of Acceptance Testing, the MSS shall revise and submit to the Owner revised O&M Manuals using As Installed information.

H. CERTIFICATES, WARRANTIES AND GUARANTEES:

1. Membrane Warranty: Provide a listing of known chemical constituents, concentrations and exposure time that would result in voiding the membrane warranty. Provide written confirmation to the Engineer and

Owner that membrane basin coating system, if required, complies with membrane warranty requirements.

2. For each of the above known chemical constituents, identify the instrumentation required, if possible, and to be provided by the MSS as well as alarm limits necessary to satisfy the warranty provisions of this Section.

1.04 SYSTEM DESCRIPTION

The Little River Reclamation Facility (WRF) is an expansion project with the MBR facility constructed in a new structure adjacent to an existing biological system. Once the proposed Little River WRF is constructed and commissioned, the existing facility will be demolished and removed from the site with the exception of the biological as noted above. The startup and commissioning of the membrane system shall be performed only after the substantial completion of the Treatment Building.

A. INFLUENT FLOW RATE:

The MBR system shall be capable of treating the following influent flows. The sludge thickening application shall be operated by an operator adjustable control system to allow the operations staff to control the wasting rate from the biological system with regard to the overall mass in the biological system.

	Units	Application	
		Wastewater	Thickening
Minimum Day	mgd	0.36	.025
Average Day	mgd	2.1	.06
Maximum Month	mgd	2.6	N/A
Maximum Week	mgd	3.3	N/A
Peak Day	mgd	6.0	N/A
Peak Hour	mgd	7.5	N/A
Maximum Flow with one train out of service for up to 24 hrs.	mgd	6.0	N/A

B. INFLUENT LOADING CONDITIONS:

The influent to the Little River WRF will flow by gravity to the plant where it will be pumped from a submersible lift station and flow into a vortex grit separation system then pass through a 1.0 mm perforated rotary drum fine screen before entering the biological system then membrane bioreactor process. The thickening system will receive flow from the membrane effluent channel. The anticipated wastewater and thickening loading conditions are:

Parameter	Units	Application			
		Wastewater		Thickening	
		Annual Average	Peak Day	Annual Average	Peak Day
MLSS, range	mg/L	2,500	9,000	2,500	12,000
BOD5	lb/day	2,716	5,107	N/A	N/A
TSS	lb/day	3,102	4,606	3,102	3,102
Ammonia	lb/day	506	1,402	N/A	N/A
Total Phosphorus	lb/day	102	200	N/A	N/A
Alkalinity as CaCO3	lb/day	2,541	7,571	N/A	N/A
Temperature, Winter	□C	13	13	13	13
Temperature, Summer	□C	20	20	20	20

The mixed liquor concentration in the biological reactor will typically vary from 2,500 to 9,000 mg/L. MLSS concentration shall be an operator adjustable parameter controlled through wasting rate input value in the sludge thickening system control system.

Each application shall be designed to meet the key effluent water quality parameters in the table below as well as typical reuse quality water as described in the Georgia DNR's *Guidelines for Water and Reclamation and Urban Reuse (3/30/12).*

Parameter	Unit	Wastewater	Thickening
5-day Biochemical Oxygen Demand	mg/L	<5	<5
TSS	mg/L	<5	<5
Total Nitrogen	lb/day	195	N/A
Total Phosphorus	lb/day	<4.2	N/A
Turbidity	NTU	<0.2	<0.2
E. Coli	Cfu/100ml	None detected	N/A

The biological treatment will be designed by the Engineer and will be based on a biological nutrient removal process that will nitrify and denitrify the wastewater to meet the permit effluent criteria. The biological process will likely be based on an aerobic solids retention time of approximately 24 days for winter max month conditions, 10 days for summer max month conditions, and 15 days at average conditions.

The bioreactor design will incorporate the use of a Return Activated Sludge (RAS) system that will pump mixed liquor from the aeration tanks to the membrane tanks and return mixed liquor from the membrane tanks to the aeration basins by gravity flow. The bioreactor design shall also incorporate the use of an Internal Mixed Liquor Recycle (IMLR) pump to optimize the biological system performance and offset the effects of high DO RAS being returned in the fermentation zone.

The total suspended solids concentration in the membrane tanks will average 10,000 mg/L for a 30 day operating condition, up to 12,000 mg/L for a 24-hour period, and a maximum of 14,000 mg/L for 1 hour. These values are higher than the design mixed liquor concentrations found in the anoxic and aeration zones of the bioreactor.

A portion of the mixed liquor return will be flow by gravity, over a weir, into the sludge thickening system which is located adjacent to the membrane system.

Scum and Foam will also be collected ahead of the gravity flow back to the biological system and sent to the sludge thickening membrane system. Surface solids shall be removed from the thickening train by a helical skimming device. The sludge thickening application shall include additional air for the mixing of the thickened sludge holding tank and membrane basin influent channel.

The wastewater membrane system shall include four trains, equally sized and designed with a minimum of one (1) train offline at peak day flow of 6.0 mgd. Each train shall be of equal capacity.

Each train shall have an individual permeate pump controlled by a variable frequency drive. Each train shall have a dedicated permeate pump with ancillary support systems and controls. Each permeate pump shall be sized for the flow range of one train.

Downstream of the membrane system, permeate pumps and/or valves will discharge the permeate into the open channel\wetwell feeding the UV disinfection system. Flow for backpulsing of the membranes or for use as part of the maintenance cleaning or recovery cleaning process shall be controlled by a control valve interlocked with the level sensor in the backpulse tank. It is expected that the pressure loss through the UV system will be 2 psi.

C. SCOPE MSS ENGINEERING SERVICES:

The Engineering Services supplied by each MSS as outlined in the Contract Documents shall include, but are not limited to the following:

1. Design of scope of supply being provided by MSS.

2. Design of Scour Air Blower System (Wastewater and thickening systems may be combined at no additional cost to the owner. Also, note that sludge holding tank and MBR influent channel requires air for mixing which is currently included in the MSS sludge thickening scope of supply)

3. Design of the Backpulse System Supply (Wastewater and thickening systems may be combined at no additional cost to the owner.)

4. Design of the Membrane Cleaning Chemical System (Wastewater and thickening systems may be combined at no additional cost to the owner.)

5. Any changes to the membrane system required by the MSS to coordinate the MSS's design with the contract documents.

6. Design of the Air Compressor System (common wastewater\thickening application).

7. Vacuum Air Removal System, if required (ejector system). The use of air receivers and vacuum pumps are not acceptable.

8. Valves and Actuators for all systems provided by MSS

9. Design of membrane basin (train) influent flow deflection plates.

10. Sludge thickening hose pump sizing and coordination with sludge thickening system.

11. Control Panels

12. Programmable Logic Controllers for each System (common wastewater\thickening application).

13. Operator Interface Terminal on the Membrane System Main Control Panel for the entire facility and remote (full functional control) terminal located in the treatment building electrical room.

14. SCADA System for the Membrane System

15. Miscellaneous Field Mounted Instrumentation including:

    a. Level and Pressure Switches
    b. Pressure Gauges and Snubbers
    c. Flowmeters
    d. Level, Temperature and Pressure Indicating Transmitters
    e. Turbidity Analyzers (on each train as well as a common effluent)

D. SPECIAL CONSIDERATIONS:

1. Design:

    a. It is the intent of this Specification and the Drawings to identify major components of each MSS's System and to establish minimum equipment and quality standards for these components. It is the MSS's responsibility to provide all parts, equipment, materials, and components required for a complete and functional System.

    b. The design drawings and specifications are based on multiple MSS's scope of supply. Every effort has been made to include

the various components both unique and common to multiple vendors with the intent of presenting a design that can accommodate multiple MSS's scope of supply within the area shown in the contract drawings. The design drawings are based on the largest footprint presented in each MSS's proposal documents.

c. The MSS shall number all equipment, instruments and valves with permanent, durable tags. The equipment numbering shall coordinate directly with the Owner's numbering scheme for this facility.

2. Drawings:

a. The MSS shall furnish all components identified on the Process and Instrumentation, Mechanical, and Electrical Drawings and as specified herein. If an item is shown to be furnished by either the Drawings or Specifications, it shall be furnished whether or not shown on both.

b. The MSS is responsible for establishing and coordinating the control of each membrane System and for interfacing with the plant control system and other systems within the facility.

1) The MSS shall determine equipment and line sizing for the system that is to be provided by the MSS for consistency with their particular process.

1.05 PRODUCT DELIVERY STORAGE AND HANDLING

1. The Contractor shall make all arrangements for transportation and delivery of the membrane system and all ancillary components to the job site.

2. The contractor shall coordinate delivery and storage of each membrane system. Coordination efforts shall include notification to the Owner

3. The Contractor will provide equipment and personnel necessary to unload, handle, and store, products by methods designed to prevent soiling or damage and as directed by the MSS.

A. STORAGE:

1. The contractor shall store MSS equipment in accordance with manufacturer's recommendations and the requirements of the Contract Documents.

2. The contractor shall make all arrangements and provisions necessary for the storage of the MSS scope of supply.

3. The MSS shall provide the Contractor with a list of equipment which could be damaged by low or high temperature and require temperature-controlled storage space.

4. Equipment shall be boxed, crated, or otherwise completely enclosed and protected during shipment, handling, and storage. Each container shall be clearly marked with the MSS's name, project name, and location. Equipment shall be protected from exposure to the elements and shall be kept thoroughly dry at all times.

5. Painted surfaces shall be protected against impact, abrasion, discoloration, and other damage. Painted equipment surfaces that are damaged prior to acceptance shall be repainted in entirety to the satisfaction of the Owner.

6. Electrical equipment, controls, and instrumentation shall be protected against moisture or water damage. The Contractor as noted by the MSS will connect space heaters provided in the equipment and operated at all times until equipment is placed in operation.

7. Membrane Cassettes and Module assemblies shall be delivered to the site assembled to the fullest degree possible. Assembly of cages and installation of cassettes into cages shall be the Contractor's responsibility.

8. Notice of Enclosed Instructions:

    a. All delivered packages containing equipment shall have notices clearly visible on the exterior of the package indicating that maintenance instructions are enclosed.

9. Panel and Instrumentation Storage:

    a. All packages containing panels, electronic devices, and other microprocessor-based equipment shall contain a desiccant, volatile corrosion inhibitor (VCI) blocks, a moisture indicator, and maximum-minimum indicating thermometer. The MSS shall provide a spare set of such protection equipment including a desiccant, a moisture indicator, and VCI blocks for each package containing panels, electronic devices, and other microprocessor-based equipment for replacement by the Contractor during the storage period.

    b. The panels and instrumentation equipment shall not be shipped to the site until field conditions are ready for installation, including all slabs, walls, roofs, and environmental controls.

1.06 MEMBRANE WARRANTY

A. MEMBRANE SYSTEM WARRANTY:

1. The MSS shall furnish an equipment warranty certificate assuring the membrane filtration units and system (including Membrane Modules and cyclic or modulating valve actuators) will meet the service conditions specified herein. Equipment warranties shall be a full replacement for a minimum period of twelve (12) months after the Acceptance Testing, See General Conditions and Special Conditions for additional warranty requirements. A pro-rated warranty period shall begin after the completion of the full replacement period of one year.

2. The MSS warrants satisfactory performance of each membrane system to achieve equipment performance (e.g., design flows, backpulse, chemical washing objectives.

3. In the event that the Owner does not believe that each membrane system meets the design criteria and conditions specified herein, the Owner shall notify the contractor and MSS that the equipment does not meet the specified requirements.

4. Performance Objectives:

   a. If either the wastewater or thickening membranes do not comply with the equipment performance objectives specified, the Owner will notify the contractor and MSS in writing.

   b. If within sixty (60) days after the notification to the contractor and MSS it has become apparent to the Owner that the remedy is not acceptable to the Owner, the Owner will provide notice to the contractor and MSS that the conditions for breach of warranty exist.

B. MEMBRANE MODULE WARRANTY:

1. The MSS warrants that the membrane modules will be used for the treatment of wastewater for reuse purposes and for sludge thickening for storage and removal.

   The MSS's Membrane Module Warranty period shall commence with the completion of the acceptance testing and continue until the end of the pro rata warranty period. The membrane module warranty shall be a 10 year pro rata warranty period.

a. For membrane modules supplied as part of the original equipment installation, the approval of the acceptance test report is the date that the Notice of Substantial Completion is issued.

b. The Contractor shall record and maintain records of the date of installation for membrane modules including the module serial numbers.

2. The MSS warrants that the membrane modules will be free from non-conformance in materials, workmanship, and membrane integrity failure.

C. MEMBRANE MODULE REPLACEMENT PRICE:

1. The MSS shall establish the membrane module price (as indicated in the Bid Pricing Form) and guarantees that membrane modules have been provided to the Owner at prices not to exceed the prevailing market price.

2. In the Bid Pricing Form, the MSS shall indicate if the membrane module pricing is to be fixed at the time of the Bid opening, or variable with the Producer Price Index (PPI) index. The PPI adjustment is the most recent Month PP Index divided by the PPI index for the month of the submittal of the Bid.

3. During the full replacement warranty period, the MSS shall provide replacement modules at no cost to the Owner, including module replacement and shipping costs to the site.

4. Module Price during the pro rata warranty period shall be calculated as follows:

$$\text{Pro Rata Module Price} = \frac{\text{Module Price x Months of Beneficial Use}}{\text{Membrane Module Warranty Period (Months)}}$$

PART 2—PRODUCTS

2.01 ACCEPTABLE PRODUCTS AND ALTERNATIVE SUPPLIERS

The Design for an Immersed Hollow Fiber Membrane System is based upon the GE Water & Process Technologies, LEAPmbr System. The County will also consider alternate membrane systems to be provided by Koch Membrane Systems, PURON, or OvivoMBR Flat Sheet system provided by Ovivo that the specified features, functionality, and materials and performance are achieved. All proposers are to submit a cost for the base bid GE system and can provided an alternate additive / deductive price for one of the alternative systems.

If one of the alternative membrane manufacturers is submitted upon, the following condition will apply:

1. Either of the alternative systems must utilized the same tankage intended for the base bid system
2. Any structural, mechanical, electrical, or control modifications necessary to support the alternate system must be included in the additive / deductive price. This includes any impact to support systems and infrastructure (for example a larger motor size creating the need for a larger sized Motor Control Center).
3. Along with the bid, a listing of any acceptations / impacts to the base bid design shall be provided. Documentation showing the configuration of the alternative system can be submitted in order to assist the county in making the determination of accepting one of the alternative systems.

2.02 SYSTEM DESIGN REQUIREMENTS

A. SERVICE CONDITIONS:

1. Ambient Environment. The equipment furnished under this section will be installed at the locations shown on the Drawings. The site conditions are expected to be as follows:

    a. Ambient Air Temperatures: 10 degrees F to 100 degrees F
    b. Relative Humidity: 10 to 85 percent
    c. Altitude: 890 feet above Mean Sea Level
    d. Environment: Warm, Humid, indoor\outdoor installation

B. PROCESS DESIGN REQUIREMENTS:

1. The wastewater and sludge thickening system permeate shall be suitable for reuse, and the membrane supplied shall be approved by the State of California Water Recycling Criteria (Title 22).

2. Each train shall have a dedicated membrane system such that for operation and maintenance efforts, each train can be isolated from service for the purposes of both cleaning and maintenance. There are four trains dedicated to the treatment of wastewater and a single train (cassette) for sludge thickening.

3. Membrane System Design Criteria: The MSS's System shall conform to the following design criteria:

    a. Membrane Flux:

        1) The net flux rate at the maximum Mixed Liquor Solids concentrations shall be:
            a) Wastewater application:
                (1) See "Table 1- Wastewater Design Flows and Membrane Requirements" in section 11300-2.02.B.3.b below.

b) Sludge thickening:

(1) Average instantaneous, 13 degrees C: 4.9 gfd

2) The MSS shall submit historical data to support the designed wastewater maximum membrane design flux under similar operating conditions including sludge age and MLSS concentrations. The data shall be normalized for standard temperature conditions (20 degrees C) using factors supported by and presented with historical data. The data shall be presented to clearly show the capabilities of the membrane at peak flows, including peak durations of 24 hours.

3) The preliminary membrane arrangement in the drawings reflects typical systems as communicated by the manufacturers during the proposal process. Actual system quantities and sizing for the application shall be the responsibility of the MSS.

4) The membrane flux design basis shall not include the addition of polymers or other materials to enhance the membrane flux performance.

b. The net permeate flow conditions listed below are those required for the membrane installation under various operating conditions. The MSS shall confirm during the bidding process that the Net Flux rates listed in Table-1 allow the MSS's scope of supply to be warranted according Section 11300-1.06. The redundancy requirements shall be interpreted such than N operating trains means all installed trains in operation and N-1 operating trains means operation with one installed train not in operation. The total membrane area provided by the MSS shall be adequate to meet the specified maximum net flux rate requirement. A minimum of 10 percent spare capacity in train shall be provided for addition of membrane modules in the future.

Mechanical equipment shall be sized for the full capacity (inclusive of the spare capacity).

Table-1. Wastewater Design Flows and Membrane Requirements

Operating condition, net permeate flow	Number of membrane units (basins) in service	Net Flux (gfd)
Minimum (0.36 mgd)	N-3	3.6
Average Day (2.1 mgd)	N-1	6.9
Maximum Month (2.6 mgd)	N-1	8.6

Operating condition, net permeate flow	Number of membrane units (basins) in service	Net Flux (gfd)
Maximum Week (3.3 mgd)	N-1	10.9
Peak Day (6.0 mgd for up to 24 hours)	N-1	19.9
Peak Hour (7.5 mgd for up to 1 hour)	N	18.6

c. Equipment Redundancy:

1) The system shall be capable of operating at the design flows with the number of membrane basin(s) in service as indicated in the table above.
2) The peak day plant flow shall be treatable with one complete membrane train (basin) out of service.
3) Redundant equipment arrangements are not necessarily shown on the drawings, but must be designed and supplied by the MSS. Blowers, compressed air system, and chemical feed systems shall be supported by a standby of equal capacity.

d. The system provided under this Specification shall be complete and operable in all respects including, but not limited to, connections to other facilities, component and system tests, calibration, alignment, and adjustments as necessary to place the system in operation to perform its intended function. MSS shall supply such additional elements as necessary for a complete and operable system.

C. GENERAL SYSTEM REQUIREMENTS:

1. The System shall be suitable for installation in a wastewater plant. Membrane basins will be under a canopy but outdoors. Major equipment, including electrical panels, permeate pumps, chemical systems, compressed air and blower systems will be indoors.

2. A Generic Process Flow Diagram has been developed for the membrane system. The purpose of this Drawing is to provide the MSS information for the project and define the scope of equipment to be provided. Equipment and appurtenances not specifically shown on these Drawings but required for operation of the System shall be provided by the MSS.

3. The MSS is responsible for establishing the control of the membrane system and for interfacing with the plant control system and other facilities.

4. Interconnecting Piping and Valves: The Contractor is responsible for all piping and valves as required to provide a complete and operating

system. All pipe and valves shall be provided in accordance with applicable provisions of this specification. The Contractor is advised that some valves shown on the Drawings will be furnished by the MSS for installation by the Contractor.

5. The description of each unit operation below shall apply to the wastewater and the sludge thickening application unless otherwise specified.

D. MEMBRANE TRAINS (UNITS):

1. The System shall be divided into 'identical' Trains or Units. 'Identical' consists of functionally independent (independent electrical and hydraulic control), and of the same hydraulic capacity. Differences in what appears to be unit symmetry (left or right hand) are acceptable.

2. The membrane modules an supporting pipe work shall be designed for a crossflow configuration by which the system will remove a portion of the water as the RAS flow circulates through the individual membrane basins. The membrane system shall incorporate a relax sequence to maintain filter flow performance. The MSS shall provide the equipment, valves, instruments, controls and other components (excluding interconnecting piping) required for the backpulse and/or relax system. The membrane system shall incorporate a maintenance cleaning system to extend the interval between recovery cleans.

3. Membrane Rack Support Assemblies:

a. All membrane modules shall be connected to individual cassette assembly.

b. The modules shall be connected to each other and to the permeate manifolds in accordance with the MSS requirements. Each membrane module connection to the permeate piping shall be sealed with food grade EPDM o-rings or hard piped to the assembly.

c. Each module shall be connected to the cassette assembly in the factory and shall be factory vacuum tested to assure proper membrane manufacturing and installation. The Owner reserves the right to witness the factory testing.

d. The cassette support assembly shall be supplied by the MSS and shall support the entire membrane cassette assembly.

e. Each membrane cassette assembly shall be isolatable from the permeate and air scour headers by manual valves. Valves shall be lockable in the open or closed position.

4. Membrane Basin Support Structure:

   a. All membrane modules, racks, rack support assemblies, piping, and valves, and other appurtenances, which make up a single train shall be supported on a single structural frame within each of the membrane basins. The top of the membrane basin support structure shall be at least 12 inches below the top of the concrete walls around the basins.

   b. Unit Support frames shall be designed to resist gravity and seismic forces of the pressure vessels, piping and other related equipment supported by the frame. The frame shall be designed in conformance with the latest edition of the International Building Code (IBC) including seismic forces as required by local building code officials, and signed by a Registered Professional Engineer currently licensed in the state of Georgia.

   c. The rack support assemblies shall be fabricated of 316 stainless steel structural members with all 316 stainless steel support brackets and anchor bolts and designed by the MSS. The MSS shall submit calculations for the support assemblies in accordance with the submittal section.

   d. The support assemblies shall be designed to support the membrane basin covers or grating.

5. Membrane Module Assemblies:

   a. The modules shall utilize hollow fiber membrane technology with proven ability and experience to meet the permeate quality requirements under all modes of operation as specified herein.

   b. MSS shall furnish a certificate providing the serial number and square footage of membrane in each module for the project. No module shall have a deviation in membrane area of more than +/- two (2) percent. The MSS shall also furnish a certificate certifying the integrity of each membrane module prior to shipment.

6. Each membrane train shall be equipped with a monitoring System consisting of a permeate turbidity monitoring system.

   a. Turbidity monitoring system

      1) An automatic sample valve located on the permeate discharge line.

2) The sample valve shall open when the unit is producing water. The sample line shall be connected to a turbidity meter provided by the MSS. Power for the turbidity meter will be sourced from the Unit control panel. The analog signal from the turbidity meter shall be routed into the Unit PLC.

7. Components and instrumentation that comprise the membrane permeate system shall be provided by the MSS in accordance with these specifications.

E. PERMEATE PUMP SYSTEM:

1. Each train shall be provided with a rotary lobe permeate pump to be sized by the MSS to achieve the flowrates for each of the individual process flows associated with backwashing, maintenance cleaning, aerator flushing, and normal filtration, as applicable. The permeate pumps shall be sized to meet the Peak instantaneous design flow, and all points less with all cassettes installed including the additional spare capacity.

2. Each of the permeate pumps will be controlled by a variable frequency drive to be provided by the MSS. The MSS shall be responsible for coordinating the variable frequency drive control with the influent flow rate and other system operations such as cleaning or adjacent trains being out of service.

3. The MSS shall be responsible for selecting a pump capable of meeting the full range of hydraulic conditions including: low flow, high flow, low and high discharge static head conditions, low and high transmembrane pressure, and single pump or multiple parallel pump operation.

4. The MSS shall submit calculations to the Engineer that verify pump cavitation does not occur over the full operating range. Calculations shall clearly compare the calculated Net Positive Suction Pressure Head Available (NPSHa) to the NPSH required for the selected pump plus a minimum safety factor of 10%.

F. AIR SCOUR SYSTEM:

1. Each membrane system shall use an air scour system to control the buildup of materials environment around the membrane surfaces. The MSS System supplies air to the bottom of the membrane modules in order to allow agitation of the membrane.

2. The air scour capacity is supplied to the membrane units by a blower system controlled by the MSS's control system. The System is designed to supply continuous air to each membrane cassette, at a flow rate designed by the MSS.

3. The membrane system shall monitor airflow to ensure that the correct amount of air is being supplied to the membranes.

4. The MSS shall submit shop drawings including layouts, materials, calculations in accordance with Section 11300-Part 1.

5. The sludge thickening air scour system shall include additional air for the thickened sludge holding tank mixing and membrane influent channel mixing. The additional air flow rate associated with the sludge thickening tank is estimated to be approximately 215 scfm and the channel mixing is 300 scfm. The Contractor shall provide and install the Coarse Bubble Mixing Equipment as specified in Section 11220. MSS and Contractor shall confirm the air flow requirements are adequate to support the mixing of mixed liquor suspended solids according to the MSS's design concentrations and the requirements of Section 11220.

G. EJECTOR SYSTEM:

1. An ejector system, if required, shall be provide for purging air from the permeate header between the membrane units and the permeate pumps. The ejector system shall be fully automatic and the primary motive fluid shall be compressed air from the compressed air system. The ejector system shall sense presence of air in the permeate header and automatically actuate to purge air from the permeate header.

H. BACKPULSE/RELAXATION SYSTEM:

1. The membrane units shall utilize a backpulse or relaxation control sequence to remove accumulated particulate and maintain the design permeate production rate.

2. Each train shall incorporate an automated relax cycle that may be utilized in addition to a backpulse cycle.

3. Where required by the MSS, backpulse systems shall be provided and controlled by the MSS. Each membrane train shall incorporate an automated backpulse cleaning cycle. The trains shall utilize a permeate backwash to remove accumulated particulate and maintain the design permeate production rate. Permeate stored in the backpulse tank shall be introduced into the permeate side of the system using a backwash system and released through the walls of the membrane. The permeate from the backpulse tank may be dosed with sodium hypochlorite for additional biological removal. The system shall allow for backpulsing the entire membrane system or one train at a time.

4. The Backpulse sequence shall be initiated through the PLC control system using totalized volume, time or an equipment supplier algorithm

acceptable to the Engineer. The backpulse process shall be carried out automatically through the PLC.

5. The Backpulse sequence shall be designed so that the same volume (amount of flow in gallons) of backwash water is produced per Unit backpulse irrespective of the degree of membrane fouling (i.e. TMP, resistance or permeability) or variation in water temperature (viscosity effect).

6. Components (FRP CIP\Backpulse Tank and instrumentation) that comprise the backpulse system shall be provided by the MSS in accordance with these specifications and the Project Drawings. Minimum requirements for FRP tanks are specified in section 13230.

I. MAINTENANCE CLEANING (MC) SYSTEM:

1. The membrane system shall incorporate an automated maintenance cleaning cycle to be provided and controlled by the MSS. The maintenance clean cycle shall remove accumulated particulate matter, biological growth and inorganic foulants from the surface of the membranes to maintain the design permeate production rate and to extend the duration between recovery cleaning cycles.

2. The maintenance clean cycle shall be initiated through the PLC control system at fixed time intervals during low flow periods during plant operations, and at totalized flow intervals during normal plant flows. These intervals shall be adjustable by the operator.

3. Water supply for the MC shall be from the backpulse tank.

J. RECOVERY CLEANING (RC) SYSTEM:

1. Each membrane basin will incorporate an automated recovery cleaning cycle if required. The recovery cleaning cycle will be controlled by the membrane system PLC provided by the MSS. The MSS shall coordinate the control of the recovery cleaning cycle with the main plant control system. Water supply for the RC shall be from the backpulse tank.

2. Over an extended period of normal operations, the membranes in each of the basins will become fouled such that backwashing, relaxation and maintenance cleaning will not recover the permeability. At such time, the system will require a recovery clean.

3. The recovery cleaning system will be initiated by the Operations staff from the PLC. The following is a general description of the recovery clean sequence. The final sequence shall be coordinated by the MSS, the Engineer, and the Contractor:

a. The membrane system PLC shall automatically alarm the Operator that a recovery cleaning of the membranes is required, based upon calculations which consider normalized trans-membrane pressure or resistivity. This calculation, or setpoint, shall be adjustable by the operator.

b. The Operator will then decide to do a clean and will initiate the recovery cleaning for the individual basin through the main plant control system. The membrane PLC shall shutoff the feed flow to the basin needing the recovery clean.

c. The membrane PLC shall allow the operator to turn the air off to the membrane basin that is being recovery cleaned. The PLC will make the necessary adjustment to the scour air setpoint provided to the Main Plant PLC. Permeate will be used for RC make-up water.

d. The PLC shall automatically change the operations of the permeate pumps. The membrane trains remaining in operation shall control the pumps to distribute the flow evenly through these operating basins.

e. The control system will signal the operator to open the manual drain valve to the individual basin and the basin will be drained by gravity. Once prompted that the drain is complete the sequence will resume.

f. The PLC will automatically control the valves and backwash supply pumps to fill the individual train. During tank filling with permeate, the PLC will initiate dosing of sodium hypochlorite or citric acid to the basin fill line. The chemicals are dosed into the membrane basin fill line to achieve mixing prior to entering the basin.

g. The PLC shall allow the Operators to be able to periodically turn air scour on in the train being recovery cleaned to allow for agitation of the membranes during the soak period. The PLC will make the necessary adjustment to the air scour setpoint provided to the Main Plant PLC. The MSS shall set the initial cycle timing, and offer adjustability to the operator.

h. The membrane PLC shall allow the Operators to be able to perform a backwash through the membranes for intermittent backwashing during the recovery cleaning soak period.

j. Once the soak/clean period is complete, the chemical solution will be diluted with mixed liquor prior to being either drained to the plant drain pumping station or placing the train back in service.

k. After a membrane train is cleaned and the chemical solution is drained, the Operator will initiate that the recovery clean is complete via the main plant control system. The PLC shall then initiate for the basin to begin filling with mixed liquor. Once the tank is full, the Operator will then bring the train back online with the membrane PLC.

l. The MSS's PLC shall control the citric acid and sodium hypochlorite batching of the RC solutions including the metering pumps and day tanks as shown.

m. Fabrication and Material Requirements:
   1) All CIP system components shall be acid, base, free chlorine and detergent compatible.
   2) All components and instrumentation that comprise the maintenance clean and recovery clean system shall be provided by the MSS in accordance with these specifications as identified in the Project Drawings.

K. COMPRESSED AIR SYSTEM:

1. The compressed air system shall be sized by the MSS, with capacities such that the air supply requirements of the membrane system can be satisfied with one compressed air system out of service.

2. The MSS shall provide compressed air system that will provide compressed air for the wastewater and thickening applications. MSS shall provide sizing calculations confirming that the air supply system will meet or exceed the following minimum size requirements:

   a. The compressed air system shall meet the requirements of the membrane filtration system (in all modes of normal operation) while operating at a maximum of twenty (20) percent duration.

3. The compressed air system shall be designed by the MSS for continuous operation.

L. CHEMICAL DOSING SYSTEMS:

1. The MSS shall provide chemical dosing systems for the maintenance clean and recovery clean systems. The chemical dosing systems shall be provided with one duty and one standby pump and shall be controlled from the membrane control panel.

M. SLUDGE THICKENER PUMPING:

1. The MSS shall provide sludge thickening pumping to remove thickened sludge from the membrane sludge thickening tank. The MSS shall coordinate the pump sizing with the design of the thickening membrane flux rate to provide a system that shall provide a minimum thickened sludge flow rate of 20,000 gallons per day at a minimum concentration of 30,000 mg/L. The sludge thickening pumping system shall be sized to allow operators to process the thickened sludge during a single 8 hour shift or over a 24 hour period.
2. The MSS shall provide a hose pump for the sludge thickener application.

N. MISCELLANEOUS:

1. Anchor Bolts: Anchor bolts will be provided by the Contractor and shall be Type 316 stainless steel conforming to ASTM A 320. The MSS shall be responsible for the design, sizing and selection of all anchor bolts required for equipment supplied by the MSS. Calculations and details for anchor bolts shall be signed and sealed by a Registered Structural Professional Engineer Licensed in the State of Georgia. Calculations shall be in conformance with the latest edition of the International Building Code (IBC). MSS shall submit the design calculations and details for the anchor bolts for review.

   a. Design with a minimum safety factor of 4.

   b. Determine design loads as follows:
      1) Equipment anchors - use the design load recommended by the manufacturer.
      2) Vibration allowances - included in the safety factor specified above.

   c. Unless otherwise shown or approved by the Engineer, expansion anchors shall conform to the following:
      1) Minimum embedment depth in concrete: 5 diameters
      2) Minimum anchor spacing on centers: 10 diameters
      3) Minimum distance to edge of concrete: 5 diameters
      4) The dimensions specified above shall be increased if necessary to accommodate required anchor load capacity.

2. Lifting Lugs and Attachments: All equipment items or component assemblies (including membrane cassettes) weighing in excess of 100 pounds shall be furnished with lifting lugs and any necessary device to allow lifting by a bridge crane hook.

3. Miscellaneous Fasteners: Bolts, nuts, washers, flange backing rings, and other miscellaneous metal components not specifically addressed elsewhere in these specifications shall be Type 316 stainless steel.

4. Piping System Design:

   a. Process piping line sizing shall be provided by the MSS in accordance with the specifications.

   b. Maximum pipe velocities shall be calculated using the maximum day, peak hour system flows.

   c. Unless stated otherwise, a maximum fluid velocity of 8 feet per second shall be used for the design of the pressure piping systems.

   d. Unless stated otherwise, a maximum fluid velocity of 5 feet per second shall be used for the design of the gravity flow piping systems.

   e. Unless stated otherwise, a maximum fluid velocity of 3 feet per second shall be used for the design of the vacuum or suction piping systems.

   f. Unless stated otherwise, a maximum air velocity of 50 feet per second shall be used for the design of air scour blower piping.

   g. Unit piping shall be arranged in order to assure that a straight run of pipe is used for the flow meters in compliance with theses specifications. The flow from each Unit shall be measured directly or through addition or subtraction of two or more flow meters.

   h. 3-1/2" and 5" pipe sizes are not permitted.

   i. All termination points will be flanged ANSI Class 150 in sizes 2 inches and larger; or NPT pipe threaded in sizes less than 2 inches.

5. Pneumatic System Design:

   a. When used, pneumatic solenoid valves shall have a pilot indicator and a manual override.

   b. Pneumatic lines shall be of 316 stainless steel construction and will be provided by others.

   c. Compressed air that is in contact with filtered water shall pass through a hydrophobic membrane filter with a retention efficiency of 0.02 microns or less.

d. Plastic valves, check valves and other appurtenances are not permitted on compressed air lines.

e. A regulator shall control the pressure of the compressed air supply. An isolation ball valve shall be located at each Unit. A separate compressed air pressure regulator shall be used for the membrane test pressure at each unit.

f. MSS shall provide flow controls as required to regulate valve actuation in order to prevent hydraulic shock.

O. FABRICATION AND MATERIAL REQUIREMENTS:

1. All welding shall be in accordance with the latest applicable codes of the American Welding Society and/or ASME Boiler Code.

a. All air scour piping, permeate piping or piping in contact with mixed liquor shall be Type 316L Schedule 10S stainless steel pipe. Schedule 80 PVC piping will be acceptable except for permeate pump suction piping and systems using rotary lobe pumps.

2. Stainless Steel Pipe:

a. Pipe sizes less than 30-inch diameter shall be stainless steel ASTM A312, welded process or TP316L, unless otherwise specified hereinafter as shown on the drawings. Schedule as noted or shown. Seamless material may be substituted for welded material but not the reverse.

b. Pipe 8-inch diameter and smaller shall be manufactured to nominal pipe sizes as listed in ANSI B36.19 and shall have a wall thickness meeting the minimum requirements of Schedule 10S.

c. Pipe larger than 8-inch diameter shall be manufactured to nominal pipe sizes as listed in ANSI B36.19 and shall have a wall thickness meeting the minimum requirements of Schedule 10S. Calculations showing that the selected wall thickness is acceptable for the service conditions shall be prepared and submitted.

d. Pipe designated for vacuum service on the drawings shall be designed for and subject to full vacuum. Calculations showing that the selected wall thickness is acceptable for the service conditions shall be prepared and submitted.

e. Grooved End: Where noted or shown.

1) Machine grooves into pipe end (Schedule 40, minimum) in accordance with grooved fitting manufacturer's recommended dimensions, tolerances, and finishes.

2) When used with Schedule 10S pipe, the groove shall be cut into a Schedule 40 spool piece to be welded to the pipe. The Schedule 40 spool piece shall be taper bored 3:1 to provide a smooth transition of inside diameters.

f. Flanges: Forged stainless steel, ASTM A182, Grade F304 or F316, lap joint flange with stainless steel stub end, ASTM A240, Type 304L or 316L, welded grade conforming to ASME B16.9 or MSS-SP43; schedule and material to match pipe. Face of stub end shall conform to ASME B16.5.

g. Welding:

1) The direct current, straight polarity, gas tungsten-arc (GTAW) process shall be used for all welding. Welding may be by manual GTAW or automatic (orbital) GTAW processes.

2) The inside of the pipe shall be purged with Argon gas during welding and while the weld is cooling to prevent oxidation of the weld.

3) Surface defects that will affect the soundness of the weld shall be removed, visually inspected, and re-welded.

4) Finished welds shall conform to requirements under Chapter V of ASME B31.3 (severe cyclic), as applicable.

5) Field welding of stainless steel piping shall not be allowed.

h. Threaded fittings shall not be used for pipe diameters exceeding 2 inches.

i. Provide the following materials of construction for all gauges, switches, chemical seals and transmitters that come in contact with the following list of process fluids or air equipment and components.

Process Fluid	Diaphragm and Wetted Parts	O-Ring/ Gasket/Seals	Non-Wetted Housing	Non-Wetted Bolting
Compressed Air	316 S/S	Teflon	316 S/S	316 S/S
Process Air	316 S/S	Teflon or 300 degrees F Material	316 S/S	316 S/S
Water	316 S/S	EPDM Viton Teflon	316 S/S	316 S/S
Citric Acid	316 S/S	Viton Teflon	316 S/S	316 S/S
Sodium Hypochlorite	Hastelloy C Titanium	Silicon Encapsulated Teflon Or Teflon	316 S/S	316 S/S

2.03 EQUIPMENT

A. COMPONENT EQUIPMENT REQUIREMENTS:

1. Component equipment shall be sized, selected and provided by the MSS and shall conform to the requirements of the Contract Documents.

B. PERMEATE PUMPS:

1. Rotary Lobe

a. General:

1) All parts of mechanisms shall be amply proportioned for stresses that may occur during fabrication, shipping, erection, and intermittent or continuous operation. All units shall be constructed such that dismantling and repairing can be accomplished without difficulty.

2) The pumping units shall operate without surging, cavitation, vibration or excessive noise.

3) Each motor shall be rated for continuous duty and sized such that it shall not be required to provide more than rated nameplate horsepower, at unity service factor, under any operating condition. Motor shall be capable of operation at any point on the operating curve.

4) Variable Speed pumps shall operate in the range of 50 to 100 percent. Motor shall be capable of operation at any point on the operating curve or at any speed.

b. Equipment Design Requirements:

1) Suction and discharge connections shall be flanged, with flanges conforming to ANSI B16.1, Class 150. Alternatively, the pump may be provided with transitions to meet this requirement.

2) Casing: Side suction and discharge. Fully confined gasket. Foot support under casing for maximum resistance to misalignment and distortion from pipe loads.

3) Lobes: helical tri-lobes arrangement.

4) Box Cover: Removable end cover allowing for lobe, and mechanical seal cleaning, repair or replacement without process piping disconnection.

5) Bearing Frame: Heavy cast iron construction. Contains large oil reservoir. Oil level maintained by constant level oiler with visible oil supply. Oil seals on each end and breather protects oil from contamination. Dowel pins between frame and adapter provide precision alignment.

6) Shaft: Designed for 0.002 inches (0.05 mm) maximum deflection at stuffing box face. All bearing and packing surfaces ground to less than 32 micro-inches.

7) Bearings: Inboard bearing is free to float axially in frame. Outboard bearing is shouldered and locked on shaft with locknut and washer, and locked in bearing housing to carry radial and any unbalanced axial thrust load. All bearing fits are precision (bored or ground) machined. Inboard bearing is single row, deep groove. Outboard bearing is double row, deep groove angular contact. Single row bearings may be used for inboard and outboard locations if the bearings are designed for radial and thrust loads and are interchangeable. Bearings are sized for two-year minimum life.

8) Acceptable Manufacturers:
   a) LobePro
   b) Lobeline
   c) Vogelsang
   d) Boerger

c. Fabrication and Material Requirements:

1) Ductile Iron

2) Casing, Impeller, Cover, Seal Chamber, Gland, Drain Plugs etc. - 316 SS

2. Motors:

a. Pumps using motors from 3 to 200 HP shall be driven by a solid shaft TEFC, 3-phase, 60 Hz, 480 volt motor.

b. Motors shall have a 1.15 service factor and shall be NEMA Design B, with Class F insulation to operate at full load with a Class B temperature rise per latest EEMAC standards. Motors shall have space heaters to prevent condensation in the motor during windings during motor shutdown. Conduit boxes to be two times NEMA standard. Provide separate boxes for motor leads and for space heater and temperature switch wiring.

c. Motors rated up from 1 HP shall meet the Minimum Motor Efficiency Standard for Premium Efficiency Motors.

d. Motors intended for utilization with variable frequency adjustable speed drives shall meet NEMA MG1, Part 31 inverter duty requirements. Inverter rated motors shall meet requirements for severe duty, IEEE 841, latest revision.

e. All grease lubricated bearings shall be provided with standard Alemite fittings.

f. Motors shall have stainless steel nameplates on which shall be stamped all pertinent electrical and bearing information and the seal of the UL.

g. Eyebolts or lifting lugs shall be provided on the motors and they shall be of adequate strength for lifting the motor. All metal parts shall be inherently corrosion-resistant or shall be protected with corrosion-proof coatings.

h. Motors rated 10 HP and above shall be equipped with temperature switch installed adjacent to the stator windings.

i. Approved Motor Suppliers

1) General Electric
2) USEM
3) Siemens
4) Reliance

C. POSITIVE DISPLACEMENT BLOWER PACKAGE:

1. Acceptable Manufacturers:

   a. Aerzen
   b. Kaeser
   c. Roots

2. Details of Construction

   a. General:

      1) A CE certified blower manufacturer with a Quality Control System certified in accordance with ISO 9001 shall supply blowers and appurtenances. Units shall be furnished as a complete system.

      2) Blowers shall be rotary-lobe, dynamically and statically balanced, tri-lobe design with an equalization chamber integral to the blower housing.

      3) The blower rotors are to be balanced according to ISO 1940 class Q 2.5. With respect to acceptable vibration levels, the blowers must operate between effective vibration speeds of 2.8 to 7.0 mm/sec. (0.11 to 0.276 inches/sec.) measured at the bearing housing per VDI standard 2056. For acceptance, all blowers must conform to ISO 2373, Machine Group T.

      4) With the combination of three lobes and the “equalization” chamber the pulsations are greatly reduced by the principle of wave interference resulting in a 20 to 35 dB attenuation of the fundamental frequency.

      5) Estimated Sound Pressure and Sound Power Levels shall be provided & expressed as dBA measured three feet from the sound source in a free field. Sound Power levels shall be less than 80 dBa measured three feet from the unit.

   b. Housing:

      1) Close grained, high strength cast iron construction with DIN inlet and outlet connections. An adapter will be provided for transition from DIN to ANSI flange.

      2) Adequately ribbed to prevent distortion.

      3) Provided with a built-in "equalization" chamber.

4) Drive-end head-plate is integral to the cylinder.

c. Rotors:

1) Stiff-shaft design with the first lateral critical speed shall be at least 120% of the maximum allowable speed.

2) Any torsional natural frequency shall be at least 10% above or 10% below the operating speed range of the blower.

3) The rotor and shaft assembly shall be a one-piece design constructed of ductile iron.
   a) Rotors shall be solid or have closed ends.
   b) Rotors shall have an integral sealing strip for improved efficiency.

d. Timing Gears:

1) Spur type, AGMA Grade 11 equivalent quality with minimum service factor of 1.7 at the maximum operating point.

2) Gears shall be secured by bolting and an interference fit on ground tapered shaft ends.

e. Bearings:

1) Type: Cylindrical Roller Bearings.

2) L-10 Life of at least 80,000 hrs. under constant maximum load.

3) Bearings and gears shall be oil splash lubricated.

f. Seals at Rotor Chamber

1) The seals at both ends of each shaft shall be non-rubbing, vented, labyrinth-type seals, each seal assembly containing four (4) hardened steel piston rings, oil deflector, and grooved, replaceable labyrinth bushing. There are a total of (16) sixteen piston ring seals.

2) Provision for venting to atmosphere between the oil-side and the air-side seals shall be included.

3) The use of lip-type seals for internal rotor shaft sealing are not acceptable.

4) Replaceable wear inserts to protect the seal bores in the headplates is required.

3. Blower Package:

a. The packaged blowers are to be standard engineered designs of a CE certified manufacturer regularly engaged in the production of packaged blowers to ensure single source accountability and shall include the following listed standard features:

1) The packages shall be driven through V-belts and sheaves. The drive assembly shall be of the high capacity type, oil and heat resistant, with a minimum service factor of 1.5.

2) Automatic tensioning of the V-belts by use of a pivoting, swing frame motor base with adjustable spring assistance and visual indication of V-belt tension shall be provided to insure the V-belts remain properly tensioned with minimal maintenance and to extend V-belt, sheave, and bearing life. Adjustment of the tensioning device shall be accomplished without removal of the guard or loosening of the motor mounting bolts.

3) Sheaves shall be sized to provide output approximately 4850 rpm at 75% of motor speed to allow for up and down adjustment of motor speed to compensate for temperature adjustment to scfm.

4) The drive guard shall be the manufacturer's standard sheet metal with provision for ventilation. The installed guard shall be fully enclosed, easily removable, and designed to meet current OSHA recommendations and CE standards.

5) The base shall be an elevated, rigid, fabricated steel design with a solid sub-base. The discharge silencer must be integral to the frame in order to minimize space requirements.

6) The blower shall be mounted horizontally for a compact frame and discharge downward to prevent accumulation of contaminates in the blower cylinder.

7) To prevent transmission of vibration and noise, the base shall include vibration isolators made of rubber in a steel

footing. The vibration isolators are to be mounted between the blower base and the package sub-base.

8) Oil drains from the blower drive-end and gear-end lubricating oil sumps shall be piped to the front of the base and shall include valves for ease of maintenance. The drain valves shall be 90° stainless steel ball valves with Teflon™ elastomers. Each valve assembly is to include a fully retained and gasketed threaded cap to prevent accidental discharge of the blower lubricant.

9) The inlet filter shall be integral to the inlet silencer and shall include a washable and reusable polyester element for minimal pressure drop. The filter maintenance cover and element must be removable by hand (without the use of tools).

10) The inlet silencer shall be of the absorptive type, directly connected to the inlet port of the blower, and shall be mounted horizontally.

11) The discharge silencer shall be directly connected to the outlet port of the blower. The discharge silencer shall be mounted horizontally and shall be integral to the base frame. The discharge silencer shall incorporate a combination of absorption, deflection, and diffusion as noise control techniques.

12) The relief valve shall be spring-loaded and factory installed in the shell of the discharge silencer to protect the blower from excessive differential pressures. The relief valve exhaust shall be piped out of the enclosure. The relief valve shall be sized to handle the full operating flow of the blower.

13) A swing-type check valve is to be provided and factory installed on the package to prevent backflow through the blower. The check valve is cast aluminum with high temperature silicone elastomers. The valve must be designed so that, in the event of failure, the valve element is retained in the body.

14) An unloaded start valve may be provided (optional) and factory installed to allow the motor to accelerate prior to system pressurization and eliminate pneumatic shock.

15) Flanged, single arch, reinforced rubber spool type expansion joints capable of withstanding 15 psig at a

temperature of 250 degrees F shall be furnished for connection to both the inlet and discharge air piping as shown on the Drawings. Expansion joints shall be as manufactured by General Rubber Corp., Mercer Rubber Co., or approved equivalent.

16) A sound enclosure shall be provided as standard, shipped fully assembled and shall be the product of the blower manufacturer to insure proper integration. The sound enclosure shall be sheet steel construction with powder coat finish. It shall have acoustic foam insulation and shall provide sound attenuation of up to 20 dB(A). The sound absorbing material must be self-extinguishing and meet the standard of UL 94, Section HFI. The enclosure shall have hinged panels and removable panels to allow maintenance access. Panels shall incorporate locking closures. An installed, integral ventilation fan, sized to provide adequate cooling of the package, shall be provided.

17) A pressure gauge shall be provided, pre-piped and panel mounted, on the sound enclosure.

18) An adjustable pressure switch shall be provided, to signal the PLC of a high pressure condition.

19) A temperature gauge, with adjustable switching point and contact, shall be provided pre-piped and panel mounted on the sound enclosure.

20) A filter differential pressure gauge shall be provided pre-piped and panel mounted on the sound enclosure.

21) The blower package shall be designed to allow all preventive maintenance to be performed from the front of the package. All utility connections and process connections shall be at the rear of the package.

22) The blower package shall be capable of being installed directly adjacent to another blower packages of similar design and shall be capable of mounting next to the wall without maintenance interference.

b. Motors:

1) Blower motors shall be totally enclosed and fan cooled, 460 volt, 3-phase, 60-hertz, and shall be inverter duty service.

2) Motors shall be compact IEC frame with a top conduit box.

3) 1.15 Service Factor

4) Motor Insulation Class R suitable for use with an Adjustable Frequency Drive

5) Supplied, mounted, aligned and balanced by the blower manufacturer.

6) Motors greater than or equal to 100 HP shall be equipped with Platinum RTD's for temperature measurement within the windings.

7) Motors less than 100 HP shall be equipped with (2) thermo-switches within the windings to allow for interfacing with the MSS PLC system.

8) Approved Motor Suppliers:
   a) Reliance Electric
   b) General Electric
   c) USEM
   d) Siemens
   e) Or approved Equal

4. Corrosion Protection:

   a. Blower – Receives one (1) shop prime coat of chromate free primer followed by two (2) finish coats of a medium-long oil alkyd.

   b. Motor – Coated with original manufacturer's standard machinery enamel.

   c. Sound Enclosure – Receives prime coats over galvanized sheet metal material, plus two (2) finish coats of polyurethane enamel.

5. Instrumentation and Control

   a. The blower local control panels shall be furnished and integrated into the membrane Control system by the MSS.

   b. Each blower shall be furnished with a consolidated local control panel for the termination of PLC I/O. Each panel shall be suitable for floor mounting, as shown. The NEMA 12 control panel shall be oil and dust tight, shall be hinged doors with print pockets, shall be freestanding, and shall be furnished with a ½-inch NPT connection for accepting a purge connection. Each control panel shall be furnished with a permanently fastened nameplate with engraving.

All control panel mounted devices shall be furnished with nameplates that are engraved to represent the function, as shown on the Drawings.

c. Include provisions for monitoring and alarm instrumentation specified herein, including but not limited to start/stop control, alarm and shutdown control.

d. Design local control panels to be delivered to the jobsite as complete, pre-wired, coordinated unit ready for installation and field wiring. Panel shall be console-type and suitable for floor mounted as indicated on the drawings.

e. Local Control Panel Functions

1) Provide overload protection system to energize a separate alarm, and shutdown the blower when motor current corresponds to amperage equivalent to motor nameplate horsepower.

f. Motor Windings Temperature Detection System:

1) Terminate the Thermoswitch leads in the local control box and route the signal(s) to the VFD to indicate a motor thermal protection alarm.

D. HOSE PUMPS:

1. Peristaltic Hose Pump:

a. Peristaltic hose type pumps for use in thickened sludge and scum pumping applications shall be provided complete with electric motor, and variable frequency drive.

b. Hose pumps shall be able to accept and use hoses standard internal diameter hoses made from either natural rubber, hypalon, Buna N or EPDM materials. Hose replacement shall be possible from either the suction or the discharge ports.

c. Pumps shall be reversible type and shall be able to rotate in either direction without any reduction in pumped flow or pump efficiency. Running the pump in reverse direction for hose replacement or unclogging of the pump suction lines shall be considered as part of the routine operation and shall not cause the pump warranty to be voided.

2. The pumping units shall be of the positive displacement, peristaltic hose type specifically designed for pumping wastewater treatment sludge and scum containing organic solids and small inorganic particles.

3. Operating Conditions:

   a. Equipment shall be specifically designed and selected for continuous duty pumping of solids derived from the thickening of wastewater derived from a membrane thickening system.

Fluid Properties	Expected Range
Percent Solids, %	1 to 3.5
Specific Gravity	1.01 to 1.05
Temperature, deg C	13
pH	4.0 to 8.0

   b. The sludge thickening hose pump will be operated at variable speed in response to the control system provided by the MSS.

4. Equipment Design Requirements:

   a. Pump shall be horizontal, positive displacement, peristaltic hose type.

   b. Pump shall be capable of operating in either direction without flow variation.

   c. Pump shall be capable of pulling 95% of full vacuum and be capable of self priming at negative suction head.

   d. Direct coupled gear drive arrangement as specified herein.

   e. Pump hardware not exposed to corrosive liquid or vapor shall be AISI 304 stainless steel.

   f. Hose must be replaceable without cover or pump removal.

   g. Pump housing shall contain a NSF-listed food-grade glycerin based hose lubricant blended to provide a medium for cooling and lubrication.

   h. Provide a threaded drain plug at the lowest point of the pumping chamber to allow the complete drainage of lubricant. Provide a threaded fill plug at the high point in the pump housing to fill the lubricant while cover plate is installed.

   i. Pump housing shall be constructed of Cast Iron ASTM A48 Class 25 and shall be supplied with an internally mounted bearing hub and rotor assembly.

   j. Rotor shall be constructed of Cast Iron ASTM A48 Class 25 with two pressing shoes mounted 180 degrees apart. Shoes shall be constructed of epoxy or extruded aluminum as recommended by the manufacturer and shall be adjustable for varying degrees of compression via flat shims constructed of 316 Stainless Steel with a shim thickness of 0.5mm.

k. Pump rotor shall be independently supported on its own set of ball bearings such that the bearings are located directly under the rotor's load.

l. Flexible metal hose connections shall be required for the inlet and outlet connections to the pump.

m. Pump supplier shall provide and install pulsation dampeners in the suction and discharge line of each pump as shown on the drawings.

n. Dampener shall be chargeable, appendage type, consist of a two-part housing and bell shaped flexible bladder, designed for vertical tee mounting in the suction or discharge line, and shall be BLACOH Fluid Control or equal.

1. Acceptable Manufacturers:

a. Watson Marlow
b. Verderflex
c. Blackmer

E. COMPRESSED AIR PACKAGE:

1. Tank Mounted Air Compressors:

a. Compressors shall be oil-less, air-cooled, reciprocating type, V-belt driven complete with inlet filter/silencer, discharge check valve, motor, and automatic pressure unloader, providing no load starting.

b. Each compressed air module shall consist of, but not necessarily be limited to, the following: compressor, drive motor, air system and electronic regulating controls.

c. Air handling systems installed with each module shall consist of the following: dry type air intake filter rated at 3 microns; pneumatically operated air intake valve/unloader assembly; minimum pressure/check valve; air/oil separation system; discharge air shutoff valve; and motor driven compressor cooling fan.

d. Each air compressor module shall have a compact welded aluminum combination cooler, and a moisture separator/trap including both automatic and manual drain lines.

e. Compressors shall use an air-cooled heat exchanger.

f. Provide compressed air equipment from one of the following manufacturers:

1) Ingersoll-Rand
2) Gardner Denver
3) Atlas Copco

2. Air Receivers:

a. Each compressor shall be securely mounted on a horizontal air receiver tank of all welded construction with semi-ellipsoidal heads and leg supports for mounting on a concrete base. The receiver shall be designed and constructed in accordance with the ASME Code for Unfired Pressure Vessels and shall bear a code stamp.

b. Receivers shall be complete with a pressure transmitter, pressure gage, pressure relief valve, automatic drain valve, and appurtenances. Receivers shall be provided with an internal factory applied epoxy lining.

c. If applicable, the receiver(s) shall be sized to accommodate a minimum of two consecutive backwashes for the system without dropping below the minimum working pressure. The minimum size of the receiver shall be as specified in Paragraph 2.01.K.2.b.

d. The receiver shall be provided with piping connections for an inlet, outlet, drain, pressure relief valve, and cleanout opening.

e. The receiver shall be suitable for installation indoors on a concrete pad. Set each receiver on a minimum of four (4) vibration isolators that are attached to the receiver. Each isolator shall be comprised of steel springs, steel top and bottom plates, leveling bolts and resilient shocks. Design the isolators to control oscillation and to withstand all lateral forces. The manufacturer shall submit calculations documenting compliance of vessel support and recommended anchorage in conformance with the latest edition of the International Building Code (IBC), including seismic forces as required by local building code officials, and signed by a Registered Professional Engineer currently licensed in the state of the installation.

f. Manufacturer:

1) Hanson
2) Manchester
3) Brunner

g. Coalescing Filters: Coalescing type oil removal filters shall be provided as shown and specified. The filters shall remove 99.995% of the solids and liquids 0.3 micron or larger in size with replaceable filter elements. Filters and housings shall be sized and selected by the MSS to meet the full rated capacity of the compressors.

h. Supply air filter assemblies shall be provided by the MSS for each compressor. Each assembly shall include the following: filters (3); filter support bracket; outlet valve (Type BV-3); auto drain valve (Type ADV-1) assemblies (3).

i. The MSS shall provide support brackets with cutouts to the filter housings. The support brackets shall be constructed of Type 304 stainless steel, and shall contain labels for the filter housings as well as inlet and outlet sides of the assemblies.

j. Differential Pressure indicators shall be provided for the filter assembly.

k. Manufacturer

1) Pall – Filterite
2) Ingersoll – Rand
3) Zeks

3. Particulate or Membrane Air Filters:

a. For air that is in intimate contact with filtered water, hydrophobic membrane particulate filters with an absolute range of 0.02-micron removal shall be provided. The filters shall have replaceable cartridges. Filters and housings shall be sized and selected by the MSS to meet the full rated capacity of the compressors.

b. Air filters with a 1-micron removal rating shall be provided for instrument air and valve actuation.

c. Differential Pressure indicators shall be provided for the filter assembly.

d. Manufacturer

1) Pall – Filterite
2) Millipore
3) Parker
4) Zeks

4. Process Air Regulator Assembly:

   a. Provide a process air regulator assembly consisting of inlet valves, pressure relief valve, air muffler, and outlet valve at the receiver outlet. One regulator within the assembly will be in service, while the second regulator will provide an installed spare.

   b. Individual control air regulator assemblies shall be installed as shown on the Drawings.

   c. Air filters shall be furnished complete with housing, support bracket, and removable filter cartridge. The support bracket and associated hardware shall be Type 304 stainless steel. Filters and housings shall be sized and selected by the MSS to meet the full rated capacity of the compressors.

   d. Manufacturer

      1) SMC
      2) Norgren
      3) Cashco.

5. Fabrication Requirements (Materials of Construction)

   a. All mounting hardware shall be Type 304 Stainless Steel

6. Refrigerated Air Dryer:

   a. A refrigerated dryer shall be furnished. Each dryer shall include the following: pre-cooler / re-heater; refrigerant compressor; liquid separator; press-o-stat regulator of condenser fan operation; expansion valve; R134a or other environmentally-friendly refrigerant; and pressure dew-point indicator monitored through the control module.

   b. Rate air dryer in accordance with the standard rating conditions of the National Fluid Power Association for class H dryers, i.e. 33 to 39 degrees F pressure dew point range at the specified minimum discharge pressure and 100 degrees F inlet air with a maximum pressure drop of 5 psi.

   c. Under this rating, provide the dryer with a capacity not less than 20 percent above the maximum total free air delivery of the air compressor system.

   d. Equip each refrigerated air dryer with a condensing unit, refrigerant evaporator, mechanical separator, automatic condensate discharge valve, high discharge air temperature alarm

light, and switch for actuating a remote alarm, prefilter, and afterfilter.

e. After-filter: Equip dryers with filters to remove oil carryover, oil aerosols and other foreign matter. Install a prefilter near the dryer inlet and install an afterfilter near the dryer discharge. Design the prefilter for mechanical removal of solid and liquid particles, equipped with a porous bronze filter element with a 5 micron rating. Provide an afterfilter of the coalescing type with a 0.5 micron rating.

f. Acceptable Manufacturers: Provide refrigerated air dryers from one of the following manufacturers:

1) Gardner Denver
2) Quincy
3) Ingersoll-Rand
4) Atlas Copco

7. CONTROL PANEL:

A local control panel shall be provided for the compressor system in accordance with the requirements of this section and Section 16176. Control panels shall be 480 volt primary UL-508A listed with NEMA 4X enclosures.

Panels will contain the following minimum devices:

14. Main disconnect switch (fused) or circuit breaker with flanged, lockable disconnecting means.
15. 480 volt to 120 volt transformer
16. All controllers, timers, programmable relays, etc. required to monitor equipment mounted electrical devices to perform necessary logic functions
17. E-Stop
18. Control power indicating light (white)
19. Hand-Off-Auto (HOA) selector switches for each compressor
20. Separate motor overload/overcurrent alarm lights (Amber)
21. Separate running lights (Red)
22. Separate fault lights
23. Fault reset push button(s)
24. Elapsed time meters
25. Input and output signals as shown on the P&ID drawings for control and monitoring of the systems.

F. CHEMICAL DOSING SKID:

1. System Design:

a. Chemical Metering Pump System supplier shall provide completely assembled, rack-mounted Chemical Metering Pump Systems.

b. The Chemical Metering Pump Systems shall not include any loose-shipped parts. It shall be completely shop or factory assembled and shall require no field assembly other than field connections of piping and wire.

c. Sodium Hypochlorite pumps shall be provided by the Contractor as specified in section 11381 due to the dual duty requirements and need to have only a single sodium hypochlorite system installed. MSS shall confirm to the Contractor that the pumps specified for the wastewater and thickening applications are sized appropriately.

2. Components:

a. General: All wetted materials shall be specifically selected for resistance to specified service chemical.

b. Piping: CPVC conforming to ASTM D2846

1) Socket welded pipe fittings with solvent weld cement specific for specified service chemical compatibility.

c. Calibration column:

1) Provide calibration column on the common suction header for each pump skid assembly.

2) Column shall be sized for a minimum 30-second draw down test.

3) Scale shall indicate both milliliters and gallons in 0.01-gallon increments printed on the side of the column.

4) Calibration chamber shall be piped and valved such that each pump may be calibrated without interfering the operation of other pumps.

5) Column to be clear PVC or equal translucent material suitable for specified service chemical.

6) Provide threaded connection at top of column for connection to common vent.

d. Strainer: Provide y-strainer as shown on the system schematic.

1) 100-mesh basket, all CPVC construction.
2) Hex cap cleanout
3) Minimum Pressure Rating: 150 psi
4) FPM seals
5) Manufacturer:
   a) Hayward Flow Control Systems
   b) Or approved equivalent

e. Diaphragm Valves: Provide diaphragm valves for all shut-off, isolation, and flow control applications. Ball valves will not be accepted.

1) Features:
   a) PVC body and bonnet
   b) Flanged or true union as shown on the Drawings
   c) Diaphragms shall be three-piece:
      (1) PTFE
      (2) PVDF gas barrier
      (3) EPDM backing
   d) EPDM o-rings
   e) Bubble-tight sealing
   f) Travel stop for over-tightening prevention
   g) Position indication
   h) 115 psi minimum pressure rating

2) Manufacturers:
   a) Asahi/America Inc. Type 14
   b) Or approved equivalent

f. Metering Pumps:

1) All pumps: Positive Displacement, motor driven, mechanically actuated diaphragm type.

   a) Simplex pumping head with double suction and discharge valves.

   b) Pumps shall include integral motor, oil-lubricated or permanent grease lubricated bearings gear reducer and cam-and-spring drive mounted in aluminum housing. Aluminum housing shall be sealed into an outer corrosion resistant housing with heat sink fins.

2) Features:

a) The liquid end shall be fully separated from the drive unit by a back plate with weep hole creating an air gap. An elastomer shaft wiper seal shall prevent contamination of the drive if the primary diaphragm fails.

b) Diaphragm shall be nylon-reinforced EPDM with PTFE-faced fluid contact surface.

c) Liquid end shall be PVC.

d) Suction and discharge check valves shall be PVDF with PTFE faced Viton gaskets and ceramic ball valves.

e) Anti-Vapor Provisions:

(1) Pumps for Sodium Hypochlorite shall have anti-vapor provisions.

(2) Pumps shall have integral design features to prevent the build-up of vapor in the pump head.

(3) A manually actuated bypass feature shall be provided to allow gas purging and instantaneous priming.

f) Power input shall be single phase 120V, 60 hz.

g) Remote Input/Output signal shall be 4-20 mA.

h) Control: Pump shall be capable of both AUTO and MANUAL stroke length and stroke speed adjustment.

i) Minimum guaranteed accuracy shall be ±1% at 3:1 turndown to steady state accuracy of the pump, and ±2% over 50:1 turndown.

j) Maximum NPSHr shall be 3 psi

3) Acceptable Manufacturer and Product:

a) Pulsafeeder Pulsar Shadow HypoPump

b) Milton Roy MacRoy Series with degassing valve
c) Or approved equivalent

g. Pressure Gauge: Provide pressure gauges for the discharge of each pump.

1) Pressure gauge shall indicate pressure in psi.
2) Gauge shall accurately indicate pressure from 0 to 150 psi.
3) Gauge shall have diaphragm seal isolation.

h. Pressure Relief Valve: Provide adjustable pressure relief valve for each pump discharge.

1) Sized for the maximum pump flow and initially set at pressure recommended by pump manufacturer.

i. Pulsation dampeners: Provide pulsation dampener for each pump discharge.

1) Single diaphragm type
2) Sized for maximum pump stroke volume

j. Backpressure Valves: Provide adjustable diaphragm backpressure sustaining type for each pump discharge.

1) Initial setpoint shall be as recommended by pump manufacturer.

k. Equipment Identification: Provide stainless steel plate with ¼-inch die-stamped equipment identification numbers mounted in a visible location.

l. Skid-Mount: Each Chemical Metering Pump System shall be completely assembled, calibrated, tested mounted and shipped on a single skid.

1) Components to be mounted include metering pumps, piping, valves, and all piping appurtenances specified herein. Vertical back panels and frame-mounted enclosures shall be provided as required to fully support all equipment and appurtenances.

2) Forklift truck cut-outs shall be provided.

3) The strength of the skid and supporting frame shall be suitable for shipping, offloading, installation and long-term support of the metering pumps.

4) Frame or rack shall have accommodations for concrete floor mounting. Fiberglass reinforced plastic mounting legs shall be provided, designed by the equipment manufacturer, to support the weight of the skid and resist vertical and lateral loads. The legs shall be of sufficient height so that the elevation of the pumps are 3'-4" above finished floor.

5) No bare metal parts shall be allowed.

3. Controls:

a. Chemical Metering Pump System shall be capable of receiving a single 4-20 mA signal from Plant SCADA system for speed control of each pump. The signal will be received and processed at the pump. Each pump shall have an integral microprocessor/keypad/LCD display having the following control features:

1) Each pump shall have the following:
   a) Manual ON/OFF/AUTO switch
   b) Membrane keypad and LCD display:
      (1) Stroke length indication
      (2) Speed indication
      (3) Manual stroke length adjustment
      (4) Manual speed adjustment
      (5) Access code shall be required to prevent unauthorized adjustments to pump operation

b. Each pumps controls/display shall be clearly marked with the pump equipment number

c. Provide all cables, connectors, and a terminal junction box for termination of remote signal circuits.

G. EDUCTORS:

1. Vacuum eductor operated using compressed air.

2. Acceptable Manufacturer and Model

a. Piab 6010
b. Vaccon VP90 Series
c. Or approved equivalent

2.04 PROCESS SWITCHES, METERS AND ANALYZERS

A. PROCESS SWITCHES:

1. Level Switches – Float Style (Type LS-3)

   a. Mechanical Switch in a plastic casing which will tilt and cause the contact closure to change status.

   b. The switch shall be capable of 250V - 3 amp inductive load

   c. The switch shall be supplied with cable of sufficient length for field installation to the control panel without splicing.

   d. Manufacturer:

      1) Flygt Model ENM-10

2. Pressure Switches (Type PS-1)

   a. Type: Switch assembly with diaphragm piston actuator for sensing gauge, differential pressure, or vacuum as required by process.

   b. Performance Specifications:

      1) Adjustable Operating Range: As required

      2) Setpoint Accuracy: 1 percent of span

      3) Actuating Setpoint: As required

      4) Switch and Reset (Deadband) Action: Adjustable, Fixed, Manual Reset or Two Stage type as required.

      5) Adjustable Deadband Range and Setting:
         a) Maximum full scale, minimum 7 percent of full scale.
         b) Required Deadband Setting shall be as required.

   c. Switch: Snap action, SPDT rated not less than 5 amp resistive at 125 Vac and 1/2 amp resistive at 125 Vdc. Provide DPDT contacts and other optional switch configurations when required.

   d. Visual Indication: Pressure Switch shall have a visual indication of the approximate pressure setting.

   e. Construction Features:

1) Pressure Housing and Diaphragm Materials: See Paragraph 2.02.C.

2) Set and Reset Point Adjustments: Adjustable external adjusting nuts and pressure setting scales.

3) Process Connection: 1/2-inch NPT

4) Housing: Copper-free die cast aluminum, NEMA 4, unless otherwise specified in the Schedule as NEMA 7 construction required for hazardous areas.

5) External Mounting Lugs

6) Adjusting Nuts Metal Cover with Gasket on NEMA 4 and NEMA 7 rated units.

7) Electrical Connection: 3/4-inch NPT

8) Filling Liquid:
   a) All applications except Chlorine and Fluoride Systems: Silicone Oil;
   b) Chlorine and Fluoride Systems: Flurolube Oil

9) Manufacturer and Model:
   a) Ashcroft
   b) SOR
   c) ITT Neo Dyn

3. Pressure Diaphragm Seals (Type PDS-1):

a. General:

1) Furnish diaphragm seals at locations shown on the Drawings.

b. Construction Features required for all seals:

1) Provide fill/bleed screw to permit filling of instrument and diaphragm seal

2) Provide a clean-out ring which holds the diaphragm captive in the upper housing to allow the upper housing assembly to be removed for recalibration or cleaning of the process side housing without the loss of filling liquid or change in calibration.

3) Instrument Connection: 1/2-inch NPT

4) Process Connection: 1/2-inch NPT

5) Working Pressure Rating: Equal to or greater than the attached gauge or switch operating pressure range or the connected process piping system test pressure, whichever is greater.

6) Bolting Materials: See Paragraph 2.02.C

c. Seal Construction Features:

1) Housing, Instrument Side: Materials shall be per Paragraph 2.02 C.

2) Housing, Process Side: Materials shall be per Paragraph 2.02 C.

d. Manufacturer and Model:

1) Ashcroft
2) Ametek
3) ITT
4) PIC

B. PROCESS METERS:

1. Level Transmitters (LIT-3)

a. Type: Hydrostatic, rod probe, top mounted

b. Mounting: transmitter shall be mounted at a point free from currents and turbulence to avoid lateral movement and contact with the vessel wall.

c. Electronic Insert:

1) FEB 22, 4-20 mA, HART, max. ripple 47 Hz to 125 Hz, Up ≤200 mV
2) Power Supply: 11.5 to 30 Vdc

d. Measuring Cell Type: Contite, condensation free, watertight, 0.2% linearity, silicon filled

e. Measuring Cell Seal: Viton

f. Diaphragm: Hastelloy C4 materials, overload resistance to 20 times nominal pressure, maximum 380 psi, and vacuum to –13 psi.

g. Process Connection and Material: 1-1/2-inch NPT/316L stainless steel.

h. Measuring Range: 0 to 6 psi

i. Housing: F 8 stainless steel, mounted separate from electronic insert.

j. Conduit Entry: NEMA 4X, ½-inch NPT

k. Manufacturer:

1) Endress + Hauser, Model FMB50 for Top Mounting
2) Siemens, Model A1000i

2. Level Transmitters (LIT-4)

a. Type: Hydrostatic, Compact, Side Mounted

b. Mounting: transmitter shall be mounted at a point free from currents and turbulence.

c. Electronic Insert:

1) FEB 22, 4-20 mA, HART, max. ripple 47 Hz to 125 Hz, Up ≤200 mV
2) Power Supply: 11.5 to 30 Vdc

d. Measuring Cell Type: Contite, condensation free, watertight, 0.2% linearity, silicon filled

e. Measuring Cell Seal: Viton

f. Diaphragm: Hastelloy C4 materials, overload resistance to 20 times nominal pressure, maximum 380 psi, and vacuum to –13 psi.

g. Process Connection and Material: 1-4” NPT/316L stainless steel flange. Refer to drawings for Flange size.

h. Typical Measuring Range: 0 to 20 psi

i. Housing: F 8 stainless steel, mounted separate from electronic insert.

j. Conduit Entry: NEMA 4X, ½-inch NPT

k. Manufacturer:

1) Endress + Hauser, Model FMB50 for Side Mounting
2) Or approved equal

3. Low-Flow Flowmeter with Controller (FI-2)

a. Provide fine control needle valve and rotameter

b. Range and Scale: Direct reading in ccm, gph or scfh as listed in the instrument Schedule

c. Accuracy: less than 2% of maximum capacity; 10% of full scale for extra low capacity meters

d. Construction:

1) Frame: 302 stainless steel or Acrylic
2) End Fittings: 316 stainless steel
3) Tube: Borosilicate Glass or Acrylic
4) Float: 316 stainless steel, black glass or tantalum
5) O-Rings: Viton (Buna-N is not allowed)
6) Tube Retainer: Kynar
7) Tube Shield: Polycarbonate
8) Check and Needle Valves: 316 stainless steel
9) Adapters and Plugs: 316 stainless steel
10) Purge Type Flow Controller: 316 stainless steel construction

e. Manufacturer and Model:

1) Dwyer
2) Cole Parmer
3) Gilmont
4) Kobold

4. Magnetic flow meter and Transmitter (FIT-1)

a. Flowtube: Produce low level, high impedance pulsed d-c signal proportional to the rate of fluid flow using the principle of electromagnetic induction.

b. Pulsed d-c Magnetic Flow Transmitter: Drive the flowtube coils with pulsed d-c power and convert the flowtube output signal into a d-c current output linear to the flow rate.

c. System (Flowtube and Transmitter) Performance Requirements:

1) System Accuracy (with Analog Output): 0.5 % of flow rate or better over range from 1 fps to 50 fps; .005 fps or better at flows below 1 fps flow range.

2) System Repeatability: 0.1 % of reading.

3) Stability: 0.1% of rate over 6 months.

4) Minimum Fluid Conductivity Limit: 5 microsiemens per centimeter or less.

5) Fluid Property Effects: Accuracy unaffected by changes in fluid Fulton County, density, pressure, temperature or conductivity (above minimum conductivity limits).

6) Transmitter Outputs:
   a) 4-20 mA Vdc, direct acting and isolated, into 0-1000 ohms.
   b) High accuracy, field adjustable scaled pulse output (0 to 1,000 Hz or greater) to drive local totalizer.

7) Power Consumption: Not to exceed 20 watts maximum.

8) Operating Temperature: Suitable for operation with process fluid temperature from -20 to 350 degrees F.

9) Pressure Rating: Greater than or equal to test pressure specified.

d. Construction and Required Features:

1) Flowtube:

   a) Type: Lined metal flowtubes.

   b) Interchangeability: Ratio of flow Fulton County to voltage reference signals generated identical for all meter sizes to permit interchangeability with transmitter without requiring circuit modifications.

   c) System accuracy shall be proven by submittal of flow test curves of the actual meters being furnished.

d) Test curves shall show a minimum of ten equally spaced flow points.

e) Tube Material:
   (1) Meter tubes: Type 304 stainless steel
   (2) Electrodes: Type 316L Stainless Steel
   (3) Conical or elliptical shaped
   (4) Material: Type 316 stainless steel
   (5) Lining: PFTE

f) Enclosure:
   (1) Materials and Rating: Cast low-copper aluminum alloy or fabricated sheet steel, NEMA 6 rated and capable of withstanding accidental submergence in 30 feet of water for 48 hours
   (2) Finish: Finish exterior, except for flange faces, with a high build epoxy paint

g) End Connections: ANSI Class 150 suitable for mating with pipe specified. Meters of 4 inches and smaller may be wafer style for insertion between flanges. 6-inch and larger meters shall have flanged connections

h) Electrical Connections: 3/4-inch NPT tapped holes for power conduit fitting and signal conduit fittings

2) Pulsed d-c Magnetic Flow Transmitter:

a) Solid state construction

b) Pulse and analog outputs galvanically isolated from input and earth ground

c) Automatic zeroing feature making it unnecessary to zero the instrument before or after placing it in operation

d) Precalibrated span adjustment providing continuous span adjustment over entire range

e) Range adjustment: Adjustable ranging.

f) Signal Conditioning: Adjustable damping circuit with response times of 0.2 to 256 seconds.

g) Low Flow Cutoff: Provide automatic low flow cutoff circuitry to stop pulse output and local totalization adjustable between 0.04-1 fps output driven to zero if below selected value.

h) Enclosure:
   (1) Die cast, low-copper aluminum alloy, NEMA 4
   (2) Finish: Epoxy coating

i) Mounting:
   (1) All transmitter and driver electronics shall be remotely mounted from the flow tubes where tube installation is greater than six feet off the ground. Transmitters that are integrally mounted to the tube shall be orientated so the local indication LOI meter is visible from the ground.
   (2) Provide complete Type 316 stainless steel mounting hardware.
   (3) Type of mounting (wall, support frame or pipe stand) as required, to be provided by the MSS.

3) Local Indication:

a) Provide Local Operator Interface (LOI) to provide Display control, Totalizer, Data Entry and transmitter parameters. Provide stainless steel tag indicating 100 percent value in engineering units as specified, the MSS is responsible for selecting the proper ranges for the equipment that is supplied.

b) Power Requirements: Designed for operation on 120 Vac +/-10 percent, 60 Hz power supply.

e. Accessories:

1) Shielded cable assemblies of sufficient length for connection between flowtube and transmitter electronics.

2) 316 stainless steel grounding rings for flowtubes

3) Provide one calibrator suitable to calibrate all flow tubes provided

f. Manufacturer:

1) Rosemount Inc. 8742 Series
2) Brooks Model 7400 (wafer) and 5000 (flanged)
3) Endress-Hausner Promag 53
4) Khrone IFC090
5) Siemens Sitrans FM Magflo Series

5. Thermal Mass Flow Sensor (FIT-5)

a. Thermal Mass Flow Sensors are specified herein for systems requiring and as shown on the P & IDs. However, the MSS shall coordinate to ensure proper pipe sizes, mounting, and process applications. The MSS's submittal shall address each Thermal Mass Flow sensor with complete mounting details and manufacturer's written approval that the proposed flow sensor and application will meet the requirements of the Contract Documents.

b. Thermal Mass Flow - Required Features:

1) Thermal dispersion type linear flow meter that measures the differential temperature between two RTDs and produces an output signal linear to the mass flow rate of air or process fluid.

2) Performance Requirements:

a) Accuracy: less than 1% of full scale for turndowns of 100:1 or less and straight upstream / downstream piping runs of 20 diameters/10 diameters.

b) Repeatability: less than 1% of full scale

c) Signal Output: 4-20 mAdc, 600 ohms max. load

d) Operating Pressure: Maximum of 100 psig

e) Flow Element Range: 0.25 to 125 FPS minimum, or as otherwise by process.

f) Power Input: 115 Vac, 15 Vac, 16 watts max

g) Operating Temperature:
(1) Flow Element: 0 degrees F to 350 degrees F
(2) Electrical Housing: 0 degrees F to degrees F

3) Pipeline Size: As shown on Contract Drawings

4) Where indicated on the Contract Drawings, the Manufacturer of the thermal mass flow meter shall furnish a Vortab Model MRFC flanged, spool-piece type airflow conditioner constructed of 304L stainless steel integral with the flowmeter. Flow conditioner shall have a flange connection for flowmeter. Flowmeter and flow conditioner shall be manufacturer assembled and calibrated as a single unit.

5) Calibration: Factory calibrated at specified flow range per System Functional Requirements as provided by the MSS.

6) Construction Features:

a) Process Connection: Threaded NPT or flanged, size as required by process demands.

b) Insertion Length: Tip of probe to extend past centerline of pipe, provide extended insertion and 1-1/4" ball valve, as required.

c) Process Wetted Parts: Minimum Type 316 stainless steel, see material of construction Section 13327, Process Instrumentation General Requirements and Switches.

d) Sensor Housing: Explosion proof Class 1, Group C and D, Division 1 and 2, or as otherwise specified.

e) Remote Electronics Housing: NEMA 4 enclosure painted with corrosion resistant epoxy paint system (NEMA 4X)

f) Mounting:

(1) The remote electronics housing shall be remotely mounted from the sensor housing at locations to be field located. Provide complete Type 316 stainless steel mounting hardware.

(2) Where drop pipe meters are required, provide hot-tap type flow element mounting with isolation valve and packing gland for removal/reinsertion of element without shutting down the line. Materials shall be compatible with process air or fluid, piping material as specified in Division 15.

g) Options and Accessories:

(1) Provide one portable calibrator unit for field checking and adjusting flowmeter calibration.

(2) Local Indication:
(a) Flow Rate Indicator: Liquid Crystal Display (LCD) scaled in scfm
(b) Totalizer: 8 digit Liquid Crystal Display (LCD) counter with lithium battery backup.

(3) Interconnecting Cable: Provide standard interconnecting cable between sensor head housing and remote electronic housing. Cable length as required per installation (50 ft. minimum).
(4) Provide special temperature compensation circuitry for 350 degrees F maximum.

h) Product and Manufacturer: Provide one of the following:

(1) Model GF90, AF88 or ST95 or ST96 FlexMasster "Smart" Mass Flow Meter, as manufactured by Fluid Components, Incorporated
(2) Magnetrol
(3) Endress + Hauser

6. Pressure Transmitters (PIT-1 and PDIT-1) High Accuracy

a. Type: Two-wire, differential capacitance type transmitters.

b. Function: Measure a pressure (either absolute (A), gage (G), differential (D/P) remote seal applications, or vacuum (V) and produce an analog output signal directly proportional to that pressure. For liquid flow measurement applications using differential pressure transmitters, integral square root extractors shall function to produce an analog linearly proportional to flow rate. For tank level applications, differential pressure type sensing element may be used.

c. Performance Specifications:

1) Accuracy (includes combined effects of linearity, hysteresis and repeatability): less than 0.20% of calibrated span

2) Repeatability: 0.10% of calibrated span

3) Hysteresis: 0.10% of calibrated span

4) Stability (drift over a 6 month period): Not more than 0.25% of transmitters upper range limit

5) Ambient Temperature Effect; Total Error per 100 degree F change between the limits of -20 degrees F and +180 degrees F. Not more than 1.0% of the transmitters upper range limit (maximum span)

6) Supply Voltage Effect: Output change not greater than 0.005% of span for each one volt change in supply voltage

7) Output:
   a) Isolated direct acting 4-20 mAdc
   b) Digital process variable signal superimposed on 4-20 mAdc signal without compromising loop integrity

8) Calibrated Range: MSS is responsible for selection

d. Required Features and Accessories:

1) Solid state electronic components

2) Positive over-range protection of at least 1.25 times the maximum span limit. Overpressure to 2000 psi without damage

3) Calibration Adjustments:
   a) Zero: Adjustable with external adjustment screws located behind protective hinged cover.
   b) Span: Coarse and fine span adjustments in electronics compartment.

4) Zero Elevation and Suppression Capability to the extent that the amount of suppression plus calibrated span does not exceed the upper range limits of the sensor.

5) Adjustable internal damping

6) Measuring elements protected by sealing diaphragm

7) Built-in electrical surge and RFI protection

8) Valves: Provide block and bleed valve with calibration port. Refer to Section 15105, Specialty Valves.

9) For level switches mount on tanks, provide the switch with a 3 inch flanged connection using materials of construction suitable for contact with the fluid.

10) Integral square root extraction providing 4-20 mAdc output linearly proportional to flow measurement applications.

11) Electric Conduit Connection: 1/2-inch NPT.

12) Process Connections: 1/2-inch NPT.

13) Designed to operate on power from remote power supply, nominal 24 Vdc. The 24 Vdc power supply shall be as specified in Section 13330, Control Panels, Enclosures and Panel Instrumentation and as shown on the Drawings.

14) Stainless steel mounting bracket and hardware suitable for mounting transmitter on flat vertical surface or 2-inch diameter pipe.

15) Process Wetted Parts: Type 316 stainless steel.

16) Non-Wetted Parts: 316 Stainless Steel, NEMA 4X

17) Body and Process Connection Bolting: See Section 13327, Process Instrumentation General Requirements and Switches.

18) Housing and Cover: Die cast low copper aluminum alloy finished with epoxy paint system; covers to be threaded and seats on Buna-N O-rings, NEMA 4 rating.

19) Capsule Fill Liquid: All applications except Chlorine and Fluoride Systems: Silicone Oil; Chlorine and Fluoride Systems: Flurolube Oil.

20) Indicator: Provide integral LCD display for indication of current pressure or flow value in engineering units, as required.

21) Tag as specified in Section 13327, Process Instrumentation General Requirements and Switches.

22) Hand held interface with keyboard and LED display capable of easily configuring and testing the transmitter, also embed the loop number and calibration range into the memory of the transmitter for future reference.

e. Product and Manufacturer: Provide one of the following:

1) Siemens Sitrans P series
2) Rosemont Series 2088, 1141, 3051
3) Foxboro Models IAP10, IAP20, IGP10 & IGP20
4) Or approved equivalent

7. Pressure Transmitters (Type PIT-2 and DPIT-2) General Service

a. Type: Two-wire transmitters.

b. Function: Measure a pressure (either absolute (A), gage (G), differential (D/P) remote seal applications, or vacuum (V) and produce an analog output signal directly proportional to that pressure. For tank level applications, differential pressure type sensing element may be used.

c. Performance Specifications:

1) Accuracy (includes combined effects of linearity, hysteresis and repeatability): less than 0.25% of calibrated span

2) Output:
a) Isolated direct acting 4-20 mAdc
b) Calibrated Range: As denoted.

d. Required Features and Accessories:

1) Solid state electronic components

2) Positive over-range protection of at least 1.25 times the maximum span limit. Overpressure to 2 times pressure.

3) Calibration Adjustments:
a) Zero
b) Span

4) Measuring elements protected by sealing diaphragm

5) Built-in electrical surge and RFI protection

6) Valves: Provide block and bleed valve with calibration port. Refer to Section 15105, Specialty Valves.

7) For level measurement use a 3 inch flanged connection using materials of construction suitable for contact with the fluid.

8) Process Connections: 1/2-inch NPT.

9) Designed to operate on power from remote power supply, nominal 24 Vdc.

10) Transmitter Body

a) See Section 13327, Process Instrumentation General Requirements and Switches.

11) NEMA 4X rating.

12) Capsule Fill Liquid: All applications except Chlorine and Fluoride Systems: Silicone Oil; Chlorine and Fluoride Systems: Flurolube Oil.

13) Indicator: Provide integral LCD display for indication of current pressure or flow value in engineering units, as required.

14) Tag as specified in Section 13327, Process Instrumentation General Requirements and Switches

e. Product and Manufacturer: Provide one of the following:

1) Rosemont Series 2088

2) Foxboro Models IAP10, IDP10, & IGP10, IAP20, IDP20, & IGP20

3) Smar Models LD291 or LD301

4) Aschroft GC51

5) Wika Type S-10 or S-11 with A-AI.1 indicator

8. Pressure Gauges (PI-1)

a. Bourdon Tube Pressure Element Type, Liquid Filled Gauges (for pressure ranges of 15 psi and greater and vacuum ranges to 30" Hg):

b. Performance Requirements:

1) Accuracy: 1.0% of span (Grade 1A or 2A)
2) Range and Scale: As required

c. Construction Features:

1) Case: Solid front design

2) Ring: Threaded, glass filled polyester

3) Back: Full blowout back

4) Window: Glass or Polycarbonate

5) Dial: White with black marking

6) Bourdon Tube and Socket: 316 Stainless Steel, heliarc welded unless otherwise required

7) Movement: Cam and roller movement, 300 series stainless steel

8) Size: 3-1/2 inch minimum

9) Connection: ½-inch male NPT

10) Mounting: Stem, Flush Panel, or Wall Mounting as required

11) Stops: Built-in overload and underload movement stops

12) Pressure Snubber: Sintered stainless steel snubber threaded into gauge socket or in external stainless steel housing with NPT connections

13) Filling Liquid:

a) All applications except Chlorine and Fluoride Systems: Silicone Oil

b) Chlorine and Fluoride Systems: Flurolube Oil

14) Process Isolation: Provide ball valves and diaphragm seals for process isolation as specified in accordance with the requirements of this Section

15) Isolation: Type 316 Stainless Steel with fill and bleed Connection

d. Manufacturer:

1) Ashcroft
2) Wika
3) McDaniel
4) Heise

9. Temperature Sensors and Transmitters - (Type TIT-1)

a. Function:

1) Sensor: Create an electrical resistance proportional to the temperature of a process medium

2) Transmitter: Condition and convert the resistance to provide a DC analog output signal linearly proportional to the process medium temperature

b. Sensor and Transmitter Performance Requirements:

1) Calibrated Range: As required

2) Accuracy:

a) Sensor: plus or minus .5 degrees F or plus or minus 0.5% of actual temperature, whichever is greater from 32 degrees F to 200 degrees F.

b) Transmitter: plus or minus 0.2 percent of calibrated span, including repeatability and linearity.

3) Sensor Stability: Less than 0.1EF shift from initial calibration in one year.

4) Sensor Resistance: 100 ohms at 32 degrees F

5) Sensor Resistance Change: 0.22 ohms per degree F

6) Transmitter Outputs:

a) 4-20 mAdc, direct acting and isolated, into O-700 ohms with a 24 Vdc power supply.

b) Transmitter Ambient Temperature Effect: Not more than plus or minus 0.5% span for a 50EC change in ambient temperature within operative limits

7) Transmitter Power Supply Effect: Maximum of plus or minus 0.005% of span per 1 Vdc change in power supply

c. Required Features:

1) Standard Length Sensor Assembly:

a) RTD type sensor assembly consisting of the following components:

(1) Three lead wire type RTD with primary resistance wire wound in a coil
(2) #22 AWG minimum insulated leads and resistance wire enclosed in small diameter seamless, closed end sheath
(3) Sheath surrounded by a thermowell designed for threaded, flanged or welded process mounting as specified in Instrument Schedule
(4) Element, sheath and thermowell joined to an industrial, heavy-duty, waterproof type head using extension fittings, compression springs and pressure plate to maintain RTD tip contact with end of thermowell

b) Sensor Insertion Length: As required, coordinate lengths with process piping and installation requirements

c) Three lead extension wire between connection head and transmitter of shielded, armored or waterproof type as recommended by the manufacturer.

d) RTD assembly shall be of general purpose weatherproof, and waterproof (NEMA 4) design. Connection head shall be furnished with O-ring gasketed and threaded cover

2) Transmitter:

a) Solid-state electronics

b) Input/output isolation

c) Designed for use with three wire RTDs

d) Factory calibrated for the operating temperature ranges

e) Field adjustable span and zero settings

f) Built-in EMI and RFI protection

g) Enclosure designed and constructed to meet NEMA 4X requirements and equipped with stainless steel brackets suitable for surface or pipe stand mounting remote from the RTD Sensor assembly

h) Barrier terminal strip wiring connections

i) 3/4-inch internal NPT conduit connections

j) Designed to operate from remote power supply at 12 Vdc to 45 Vdc.

d. Materials:

1) RTD element: Platinum

2) Sheath, thermowell and extension fittings: 316 stainless steel

3) Connection head and transmitter enclosures: Die cast, low copper aluminum

e. Accessories: Provide a local loop powered 0 to 100% analog or 3-1/2 digit LCD indicator mounted either in the transmitter enclosure and visible through an inspection window, or mounted in a separate enclosure installed near the transmitter. The LCD indicator shall be calibrated in engineering units and shall have an accuracy of plus or minus 0.1% of span and plus or minus 1 count. Analog meter shall have an accuracy of 2% and shall be furnished with an auxiliary stainless steel tag to indicate 0-100% calibrated range in engineering units.

f. Manufacturers:

1) Siemens Sitrans T series
2) Rosemont Inc. 3144, 3244MV
3) Foxboro RTT25
4) Endress and Hauser

C. PROCESS ANALYZERS:

1. Turbidimeter (AIT-1)

a. Type: Continuous monitoring system of low levels of particulate turbidity. The system uses the Nephelometric method of measurement. The system consists of turbidimeter and a control unit.

b. Controller Performance:

1) Range: 0 - 100 NTU.

2) Accuracy: +2% from 0-30 NTU, +5% from 30 -100 NTU.

3) Repeatability: +1% or +0.002 NTU (whichever is greater) or +0.0004 NTU below 0.1 NTU when higher resolution is selected.

4) Response Time: For a full scale step change, 90% response in 5 minutes at 7.5 gph flow rate.

5) Resolution: 0.001 NTU or 0.0001 below 0.1 NTU, selectable.

6) Sample Flow Rate: 3.5 to 11.5 gph.

7) Sample Temperature Range: 32 - 122 degrees F.

8) Output: 4-20 mA programmable over any portion of the 0-100 NTU range.

c. Construction Features:

1) Turbidimeter:
   a) Optical and hydraulic components housed in turbidimeter body. Optical components mounted on a head assembly for easy removal for servicing without disturbing sample flow.
   b) Body constructed of corrosion-resistant structural plastic.
   c) Inlet Fitting: 1/8 inch NPT, 1/4 hose barb provided.
   d) Drain Fitting: 3/4 inch NPT, 3/4 hose barb provided.
   e) Mounting: Wall.

2) Control Unit:
   a) Microprocessor-based solid state circuitry designed for measurement of turbidity and transmission of proportional output signal linear to turbidity.
   b) Self-test diagnostics to detect key instrument malfunctions.
   c) Front of panel membrane sealed keypad switches for display control and transmitter function control testing and calibration. Front panel display of current measured NTU.
   d) A bubble rejection circuit to eliminate spikes in measurement due to transient sample conditions.
   e) Mounting: Wall.
   f) Housing: NEMA 4X.
   g) Power Supply: 120 Vac, 60 Hz, 68 watts.

d. Accessories: Include sufficient quantities for one year operation assuming routine calibration. Include calibration cylinder, formazin calibration kit, bubble trap extraction tool.

e. Product and Manufacturer: Provide one of the following:

   1) 1720E, as manufactured by Hach.
   2) No Equal.

2.05 VALVES

A. TYPE 1 BUTTERFLY VALVE (BFV-1):

1. Service Conditions: General Service - less than 30 inches in diameter:

   a. One Piece Body

      1) Unless otherwise specified or approved by the Engineer, all valves shall be lugged style.

         a) Body: 1 piece cast iron or ductile iron body
         b) Disc: 316 stainless steel disc
         c) Stem: 316 or 416 Stainless Steel
         d) Bushings: PTFE
         e) Pins: Stainless Steel
         f) Seats and Seals:
            (1) Water Service – EPDM
            (2) Compressed Air – Teflon - PTFE
            (3) Process Air – Fluorocarbon (Viton, RTFE, or Fluorinated Hydrocarbon Elastomer ASTM D1418) rated for 350 degrees minimum or higher if required by process.

2) All valves shall be furnished with two upper and one lower bearings/bushings of PTFE material. Shaft seals shall be provided to prevent leakage and to protect bearings from internal or external corrosion.

3) Valve seats shall be of the reinforced resilient type and shall be field replaceable. Seats shall also act as a body liner to prevent flow from contacting the body casting. Seats shall have flange sealing to provide a positive seal without use of flange gaskets.

4) Valves shall be rated for a minimum of 150 psi bi-directional- “dead end” or 175 psi with directional (with the disc) / 100 psi (against the disc) “dead end” bubble tight shut-off capability without the use of backing flanges. Valves to be suitable for and rated for full vacuum service.

5) Body wall shall exceed requirement for AWWA C504 Class 150 standard.

6) The disc shall be secured to the shaft using at least 2 Type 316 stainless steel pins or self-locking setscrews.

7) Valves shall have the ability to be installed with the disc in the closed position.

8) Valves shall be suitable for process air or vacuum service.

9) Factory Testing: Test shall be conducted on each valve in accordance with Manufacturer's Quality Control procedures.

10) Acceptable Manufacturers:
    a) DeZURIK – Type BRS
    b) Centerline Model 200/225
    c) Bray Series 30/31

B. TYPE 2 BUTTERFLY VALVE (BFV-2):

1. Service Conditions: Automated – Modulating and Cyclic Service

a. For valves that are in locations where reliability is a consideration, or for automated valves that automatically modulate for flow control or actuate with periodic backwashing or other MSS designated terminology describing the reversal of periodic flow through the membrane system that occurs at design intervals of less than 2 hours, the MSS will provide automated valves that

utilize an offset disc design and are classified as a "High Performance Butterfly Valve" with a soft seat.

b. Valves shall provide ANSI class VI shutoff

c. Materials of Construction

1) Body: 316 Stainless Steel
2) Disc: 316 Stainless Steel
3) Shaft: 17-4PH SS or 316 Stainless Steel
4) Pins: 316 Stainless Steel
5) Seats and Seals:
   a) Water Service – EPDM, Teflon
   b) Compressed Air – Teflon - PTFE
   c) Process Air – Fluorocarbon (Viton or RTFE or Fluorinated Hydrocarbon Elastomer - ASTM D1418) rated for 300 degrees minimum or higher if required by process.
6) Backing Ring: Stainless Steel
7) Bushing / Bearings: EPDM or RTFE
8) Packing: PTFE

d. Throttling or rate of flow control valves may be of the butterfly type. The MSS shall submit calculations to verify that valve cavitation does not occur over the operating range of the valve.

e. Bolting Pattern - Lugged valves shall be used.

f. Acceptable manufacturers:

1) Keystone - K-Loc High Performance Butterfly Valve – F312 or F362
2) DeZURIK - High Performance Butterfly Valve
3) Flowseal (John Crane) - Soft Seat High Performance Butterfly Valve
4) Jamesbury - Wafersphere - High Performance Butterfly Valve
5) Fisher – PosiSeal
6) Masoneilon Dresser – High Performance Butterfly Valve
7) Bray Series 40/41

C. STAINLESS STEEL ISOLATION BALL VALVES (TYPE BV-1):

1. Stainless Steel isolation ball valves are required for pressure gauges, pump casing drains and other locations as shown on the Drawings.

2. The Ball Valve shall consist of a type 316 stainless steel body, a polished stainless steel ball and a Teflon seat. The valve shall be equipped with a

lever type handle. The valve shall have a minimum working pressure of 800 psi WOG (Water-Oil-Gas).

3. Ball valve of 2 inches or less shall have NPT threads. Ball valves used in caustic service or in applications larger than 2-inches shall have flanged end connections.

4. Provide double acting pneumatic actuators using the same manufacturer of the valve, if required for valves less than 1-inch in size. Refer to Section
15106 for pneumatic actuators for valves 1-inch and larger in size.

5. Acceptable Manufacturers

   a. Apollo Type 76
   b. Watts Type S-8100 and S-8000
   c. Whitey (Swagelok) Series 40
   d. Parker CPI – 2 way ball valve.

D. PVC PLASTIC BALL VALVES (TYPE BV-2):

1. For use in service water and chemical dosing system applications only.
2. PVC or CPVC Plastic Ball valves shall use a dual union design.
3. The elastomer shall be compatible with the chemical service.
4. Acceptable Manufacturers
   a. Nibco - Chemtrol
   b. Asahi – Duo Block
   c. Spears
   d. George Fischer

E. DOUBLE DISC OR DOUBLE DOOR STYLE CHECK VALVES (TYPE CV-3):

1. Service Conditions: Pump Discharges

   a. Body: 316 Stainless Steel if in contact with CIP
   b. Body: Ductile iron if not in contact with CIP
   c. Seat and Bushings: 316 Stainless Steel
   d. Spring and Screws: 316 Stainless Steel
   e. Seals:
      1) Water: Viton, EPDM (Buna-N is not acceptable)
      2) Process Air: Fluorocarbon (Viton, RTFE, or Fluorinated Hydrocarbon Elastomer ASTM D1418) rated for 350 degrees minimum or higher if required by process.

2. Acceptable Manufacturer:

   a. Valmatic Model Dual Disc

b. Centerline Model 800
c. APCO S-9000 Series

F. CHECK VALVE (TYPE CV-5):

1. Service: Instrumentation and Sample Lines
2. Style: Diaphragm Check Viton Elastomer
3. Material: PVC
4. Manufacturer
   a. Plastomatic

G. ECCENTRIC PLUG VALVE (TYPE PV-1):

1. Service: Wastewater Lines. Plug valve shall be non-lubricated eccentric type with resilient faced plug.

2. Body: Cast Iron Type ASTM A126 Class B.

3. Plug: Resilient Style Type ASTM A126 Class B. The plug shall have a cylindrical seating surface eccentrically offset from the center of the plug shaft.

4. Bearings: Sleeve Style Type 316 Stainless Steel.

5. Shaft Seals: Multiple or V- or O-ring type with externally adjustable and replaceable without removing the bonnet or actuator from the valve under pressure.

6. Ends: Flanged ANSI 125/150 standard

7. Pressure Rating 150 psi

8. Packing: EPDM

9. Manufacturer

   a. DeZurik
   b. No “or Equal”

H. COMBINATION AIR/VACUUM RELIEF VALVES (AVRV-2):

1. Acceptable Manufacturer

   a. ARI D-040
   b. Or approved equivalent

I. NEEDLE VALVES (TYPE NV-1):

1. Needle valves and sample valves shall be constructed from Type 316 stainless steel with a regulating stem.

2. Acceptable Manufacturer

   a. Swagelok (Whitey) Models 1R, 18R
   b. Parker
   c. Circle Seal

J. NEEDLE VALVE (TYPE NV-2):

1. Needle valves for pressure transmitters shall be supplied with inlet isolation valve and a bleed valves located on the transmitter side of the process. Isolation and Bleed valve shall be provided with a tee type handle. Calibration and transmitter connections shall share and sense the same pressure. The calibration piping connection is plugged during normal operation. Calibration can be performed by removing the pipe plug.

2. Materials: Type 316 stainless steel

3. Acceptable Manufacturer

   a. Anderson Greenwood
   b. Parker
   c. Swagelok (Whitey)

K. SOLENOID VALVES (TYPE SV-1):

1. Type: Brass with Watertight NEMA 4 Class F Enclosure (Red Hat II) for field mounting.

2. Suitable for compressed air or water service.

3. Rated for 150 psi minimum pressure.

4. Solenoids used on low pressure systems shall be of the Direct Lift style requiring zero pressure differential.

5. Solenoids used for Vacuum Service must be rated for low vacuum service (up to 28.5 inches Hg).

6. Manufacturer

   a. Two Way Asco Models 8262 (1/4 inch), 8030 or 8210 (larger than 1/4 inch)
   b. Two Way Asco Models 8262, 8030, 8210 and 8215 (for vacuum)
   c. Three Way Asco Model 8300
   d. Four Way Asco Model 8344 or Model 8551 Direct mount style.

L. TYPE 1 PRESSURE RELIEF VALVE (PRV-1):

1. Service Conditions: Process Air Control Receiver safety relief valve as furnished by the receiver supplier.

M. TYPE 1 PRESSURE CONTROL VALVE (PCV-1):

1. Service Conditions: Process air supply to MF unit and instrument air supply to pneumatic valves on MF membrane train.

N. DIAPHRAGM VALVE, UNION END, PLASTIC (DPV-4):

1. Type: Valves shall be socket union end weir type diaphragm valves meeting MSS-SP-88. Valve shall incorporate an adjustable travel stop and shall be equipped with a clear stem cover.

2. Material: PVC, CPVC, or PVDF bodies to match the piping attached, EPDM backed Teflon diaphragms and Type 316 stainless steel hardware. Stem bushing shall be bronze.

3. Socket weld valves shall have union connections attached to each end for ease of maintenance.

4. Manufacturer

   a. ITT Dia-Flow
   b. Asahi

2.06 ACTUATORS

A. TYPE 1 - PNEUMATIC VALVE ACTUATOR OPERATORS: (Matches Valve BFV-1 and BV-1 for valves 1” and larger in size. Also Matches BFV-2 and Cyclic Service Valves 8 inches and less in size.)

1. Service Conditions: General Service Quarter Turn Butterfly and Ball Valves

2. Cylinder actuators shall have working mechanism fully enclosed, and shall be sized for operation using 80 psig pneumatic supply. Cylinder

actuators shall have pilot valves where indicated on the Drawings. Units shall have adjustable end position stops. All valve actuators shall include proximity type limit switches. Limit switches shall be programmed to register the open and closed positions. Tubing connecting valve mounted solenoids to the actuator shall be type 316 stainless steel.

3. Pneumatic actuators shall be capable of producing a minimum of 1.5 times the required operating torque.

4. Materials of Construction:

   a. Actuator Body and End Caps: Aluminum
   b. Piston: Aluminum
   c. Seals: Nitrile or EPDM
   d. Pinion Shaft: Stainless Steel

5. Special Valve Actuator Finish: The exterior finish of the valve actuation shall be provided with a special corrosion resistant finish to resist unanticipated or accidental spray of acid, base or oxidants. Acceptable finishes include

   a. epoxy coating
   b. electro-less nickel.

   Anodized aluminum shall not be used for the exterior finish of the valve actuator.

6. Provide valve disc position indicator on operator.

7. Acceptable Manufacturers

   a. DeZurik - Compak II
   b. John Crane - Centerline Series 33000 / 38000
   c. Jamesbury - Type ST or SP
   d. EL-O-Matic
   e. Bray Series 92/93
   f. Morin

B. TYPE 2 – PNEUMATIC VALVE ACTUATOR (MATCHES VALVE BFV-2, AND BFV-4):

1. Service Conditions: Cyclic Valves 10 inches and larger and all Modulating Service Quarter Turn Butterfly Valves regardless of size.

2. Actuators may use Scotch Yoke or Offset Rack and Pinion Design.

3. All valve actuators shall include a solenoid and proximity type limit switches. Limit switches shall be programmed to register the open and closed positions.

4. Scotch Yoke Design:

   a. Cylinder actuators shall have working mechanism fully enclosed, and shall be sized for operation using 80 psig pneumatic supply. Cylinder actuators shall have pilot valves and positioners where indicated on the Drawings. Units shall have adjustable end position stops. All valve actuators shall include proximity type limit switches. Tubing connecting valve mounted solenoids to the actuator shall be type 316 stainless steel.

   b. Pneumatic actuators shall be capable of producing a minimum of 1.5 times the required operating torque.

   c. Special Actuator Warranty: The actuator shall be fully warranted by the actuator manufacturer for full replacement in the event of failure of any type for a period of not less than three years for modulating or cyclic use.

   d. Materials of Construction

      1) Actuator Body: Painted Ductile Iron and/or Stainless Steel
      2) Piston: Ductile Iron or Stainless Steel
      3) Piston Cylinder: Stainless Steel
      4) Seals: Teflon, Nitrile or EPDM
      5) Pinion Shaft: Stainless Steel

   e. Provide valve disc position indicator on operator.

   f. Acceptable Manufacturers

      1) Morin –Model 79B
      2) Jamesbury - Type BC

C. OFFSET CYLINDER RACK AND PINION DESIGN:

1. Cylinder actuators shall have working mechanism fully enclosed, and shall be sized for operation using 80 psig pneumatic supply. Cylinder actuators shall have pilot valves and positioners where indicated on the Drawings. Units shall have adjustable end position stops. All valves shall include proximity type limit switches. The cylinder shall be offset from the rack in order to eliminate a cantilever load. The rack must be supported by a saddle pin and saddle pin bushing. Tubing connecting valve mounted solenoids to the actuator shall be type 316 stainless steel.

2. Special Actuator Warranty: The actuator shall be fully warranted by the actuator manufacturer for full replacement in the event of failure.

3. Pneumatic actuators shall be capable of producing a minimum of 1.5 times the required operating torque.

4. Materials of Construction

   a. Actuator Body: Stainless Steel
   b. Piston: Stainless Steel
   c. Seals: Nitrile or EPDM
   d. Rack and Gear: Stainless Steel

5. Provide valve disc position indicator on operator.

6. Acceptable Manufacturers

   a. QTRCO – QTRPAC - Q Series

D. TYPE 6 – ELECTRIC VALVE ACTUATOR:

1. General: Electric motor operators shall be furnished complete with motor, extension bonnet, torque tube, position indicator, integral reversing starter, and controls specified herein. All components shall be entirely suitable for outdoor service.

2. Electric motor operators shall conform to AWWA C504, except as specified herein.

3. Electric motor operators shall be capable of producing a minimum of 1.5 times the required operating torque.

4. Voltage: 110 VAC, 60 Hz, 1 phase. Provide for 110 volt control power or 24VDC, 4-20 mA control signal as required and as shown on drawings.

5. Enclosure: NEMA 6 (IP 68)

   a. Non intrusive entry with no mechanical parts penetrating the control enclosure of the actuator.

   b. Double O-ring seals

   c. Separately sealed terminal compartment.

6. Mounting Hardware: Provide extension bonnet, torque tube and bonnet supported floorstand for mounting each electric operator on valve with shaft vertical in horizontal pipeline.

7. Controls:

   a. Provide dry contacts for remote indication of:

      1) Ready to operate-control voltage available, fuses and overloads intact

      2) Valve full open

      3) Valve full closed

8. Display: Provide LCD Display of valve position, calibration and diagnostics.

9. Starter: Provide reversing contactor in NEMA 4 enclosure integrally mounted on operator.

10. Thermal Protection: Provide winding thermal protection.

11. A feedback position transmitter shall be supplied with each modulating service valve.

12. Provide valve disc position indicator on operator

13. Manufacturer:

    a. Rotork IQ
    b. Limitorque MX

2.07 CONTROLS

A. GENERAL REQUIREMENTS:

1. The MSS shall provide labor, materials and incidentals to furnish, program, test, and place in operation the instrumentation and control system equipment. The system includes, but is not necessarily limited to the following equipment:

   a. Primary sensor / transducers, analytical instrumentation, field instruments, and associated mounting hardware.

   b. The programmable controller system including processors, communications modules, input/output racks, input/output modules, and local panel mounted operator interface terminal (OIT). A second OIT shall be provided and programmed by the MSS. This device shall be turned over to the contractor's system

integrator for mounting in panel OIT-5000, located in the membrane process area.

c. SCADA screens for operating and control of the membrane bioreactor system provided by the MSS.

d. Panel mounted Operator Interface Terminals will be provided by the MSS.

e. PLC panels, Local Control Panels, and enclosures.

2. Provide, program, test and configure the membrane control system such that the HMI, programming and logic is compatible with the Contractor provided programming of the balance of the plant.

B. FUNCTIONAL DESCRIPTION:

1. Primary process control philosophy for the Little River WRF has been developed to provide fully automated control of the following systems: membrane units, chemical feed systems, and support systems under normal conditions, with manual operator control option available for selected systems. Control shall be based on a Programmable Logic Control System (PLC) furnished by the MSS.

2. The membrane control system shall consist of a Main Control Panel with an HMI and PLCs or Remote I/O modules located at each membrane unit and within other local control areas to control mixed MBR feed Pump Station pumps,. The MSS will supply and provide for local OIT and HMI connections at various locations in the facility.

3. The HMI station shall be both provided and configured by the MSS. The MSS shall develop the operator interface screens for the control station. Complete system monitoring and operator control capability with programming input capability shall be provided at the HMI station. The MSS shall be responsible for complete, integrated PLC system programming (Control System) for the fully functional membrane treatment system.

4. Systems status operation, monitoring, alarming, and data archiving shall also be performed by the Control System. In general, all mechanical and tank systems shall be continually monitored for physical conditions (run status, level, etc.). Alarms shall be provided for system malfunctions or high/low levels, etc. Archived data shall include such system parameters as equipment water levels, run times, instantaneous and cumulative flows, water quality data, membrane operational functions (resistance, permeability, backwashes, CIP cycles, physical integrity tests, etc.), and similar data which would be of value for regulatory and/or operations and maintenance (O&M) purposes.

5. The PLC shall be designed to manage all MSS process sequences, such as backwash/backpulse, relaxation, chemical washing, CIP cycle, and other sequences as required.

6. Control programming shall be configured with appropriate software time delays to avoid rapid pump or membrane flow cycling in response to transient dynamic hydraulic effects caused by backpulse cycles.

7. The plant flow rate will be set from the moving average incoming flow.

8. The membrane system shall be capable of being accessed from the Plant SCADA System and the membrane SCADA system.

9. System Startup

    a. One system shall start at a time. The number of MEMBRANE basins will be selected automatically based on the incoming flow and the minimum operating capacity of the MEMBRANE Basins. The number of units can be based on other factors as determined by the MSS depending on the system design.

    b. Once the number of units to operate is determined the MEMBRANE system will operate to maintain a flow setpoint for a period of time. After the system is online and stabilized the MEMBRANE system control will switch to either Level control Mode or Flow control mode.

10. System Operation (Level Control Mode)

    a. The MEMBRANE PLC shall divide the total incoming plant moving average flow between the number of operating Units. The Units shall use that flow as a starting point to control to maintain a range of level in the MLT channel. Each Unit shall have a maximum flow set point to prevent over production of permeate.

    b. The PLC system will monitor units for online status to determine if the unit is available for production.

    c. The MSS will determine the criteria for bringing units online based on flux rates and unit flows.

    d. The MSS will design a system to ensure the MEMBRANE units operate within the range of acceptable flux rates and within the range of acceptable pump speeds.

e. The MSS will determine the criteria for taking units offline based on flux rates and unit flows as determined by the MSS to provide and orderly shutdown of one or more membrane basins. The unit, which has been in service the longest, will be taken off-line first.

f. During normal operations, the MEMBRANE system will be limited to 100 percent flux by a system lock.

11. System Operation (Flow Control Mode)

a. The MSS shall provide the option of running one or more basins in Flow control mode. In this option the Operator sets the unit flow setpoints manually. Units not in flow control mode operate in level control mode. The Units shall use that flow to control permeate production. Each Unit shall have a maximum flow set point to prevent over production of permeate.

b. Each membrane unit will be able to operate independently in flow control mode. In this mode the unit is set to operate within an MSS defined range from the unit flow setpoint.

c. This mode will be used in the acceptance test to manually simulate peak conditions. Set points requiring operation above the critical flux rate will simulate the peak conditions and set points at low flow rates will simulate recovery periods.

12. Backwash/Backpulse/Relaxation

a. The MSS will design their own backwash/backpulse/relaxation sequences per their own proprietary processes.

13. CIP/MC/RC

a. The MSS will design their own CIP, maintenance clean and recovery clean sequences per their own proprietary processes. The MSS will provide all necessary controls, and alarms for the chemical delivery systems.

14. Compressed Air System

a. The MSS shall monitor the air pressure in the receiver and the low-pressure switches for the compressed air system.

b. The compressed air system shall be designed to maintain a minimum air pressure in the receiver.

c. A low-pressure switch shall be located on the supply line to the membrane filtration units. In the event of a low-pressure condition, an alarm notification will be issued.

15. Air Scour System

a. The MSS shall provide controls required for the operation of air scour sequence.

b. The MSS will send a flow setpoint to the plant air scour blowers. Logic will be developed in the plant system to control the flow in the air scour header to each MEMBRANE unit. All duty standby logic and inlet valve trimming will be accomplished by the plant PLC.

c. Calculate and display the flow in scfm used for the air scour sequence of the membrane unit using pressure and temperature compensation.

d. A pressure transmitter will be located on the air scour header. In the event of a low-pressure condition an alarm notification will be issued.

e. Controls will be developed in the plant PLC to minimize surging of air during on-off duty cycles in the air scour system.

C. PROGRAMMABLE LOGIC CONTROL (PLC) SYSTEM:

1. MSS shall provide design, equipment, components, assembly, programming, configuration, testing, start-up and training required to provide a complete and operational Programmable Logic Control (PLC) system. The system shall include:

a. PLC Hardware:

1) CPU processors, Power Supplies and Backplanes
2) Local I/O
3) Communication Modules

b. PLC Software

c. Operator Interface Computer Stations

d. PLC Communications systems to:

1) Local I/O
2) Operator Interface Computer Stations
3) Variable Frequency Drives

2. The programmable controller system processors, communications modules, input/output racks, and input/output modules, shall be configured as substantially indicated on the Drawings and as specified herein. The PLC system shall be programmed / configured by the MSS to perform the functions specified herein and support facilities that are to be provided by the Contract Documents.

3. The PLC system shall be designed around the following:

    a. PLC Platform

        1) Allen Bradley Control Logix PLC Platform

    b. PLC Programming Software

        1) Allen Bradley RS Logix Programming Software

    c. Communication to VFD Drives

        1) Ethernet Communication to VFD Drives

4. General Design Requirements:

    a. Provide a complete PLC system with local I/O components. PLC and software components shall be configured to perform the functions required by the MSS.

    b. The PLC chassis design shall be suitable for sub-panel mounting inside control panels. All system modules shall be designed for easy removal from and replacement in the chassis. Discrete and analog I/O modules shall be designed to permit module removal and re-installation without disturbing or disconnecting any field wiring terminations. Terminations to field devices shall be clearly marked.

    c. The PLCs shall be capable of being programmed in both an off-line (program) mode and an on-line (run) mode from any of the Operator Interface Computer Stations across the communication network (Ethernet) and by means of a PC based programmer connected to the PLC processor installed in the system I/O chassis. On-line data and program logic changes shall not necessitate halting the processor. Whenever used, the term Ethernet represents the Ethernet TCP/IP protocol.

    d. Required Features: The I/O modules and system hardware supplied shall incorporate the following design and construction features and comply with the following requirements:

1) Noise immunity and filtering

2) IEEE surge-withstand rating to IEEE 472

3) Optical isolation for all inputs and outputs to provide controller logic protection

4) Any card, any slot, plug-in packaging, with locking bars and/or screws to hold I/O modules in place

5) 300 volt, screw type, I/O wiring terminal arms sized to accommodate a minimum of one (1) #14 AWG and two (2) #18 AWG wires per terminal. Wiring design shall allow I/O module removal and replacement without disturbing I/O wiring connections. All terminals shall be provided with unique identification in accordance with approved loop interconnection diagrams or I/O schematics.

6) Front-of-module LED Status indicators for each individual input and output point that indicates when power is applied at I/O terminals

7) Where required and recommended by the manufacturer, external transient suppressors shall be provided for installation across the output loads

8) Field devices (such as level switches - subject to immersed water conditions) shall be 24 VDC only. All field devices shall be short circuit protected.

9) The process interface modules shall be capable of accepting switch contacts, solid state switch and high-level logic inputs; 4-20 mADC analog inputs; and shall provide discrete outputs; and 4-20 mADC analog outputs as required.

10) The discrete inputs shall provide power to field dry contacts. Contact inputs shall be optically isolated. Each input circuit shall be designed to withstand transients and surges without damage. Input components shall be short circuit protected so that failure within one component will not interrupt processing of others. Front panel indication shall be provided for blown fuse status for any control fuses supplied. Input circuits shall be tested to IEEE Standard C37.90 surge withstand capability. Maximum number of inputs per card shall be 16.

11) The discrete outputs shall be capable of providing relay dry-contact or solid state outputs with interposing relays to control 24 VDC or 120 VAC powered loads.

12) Dry contact output contacts shall be rated 5 Amps at 120 VAC minimum. Outputs shall be individually isolated. Output failure mode shall be selectable so that upon station or communication system failure all outputs shall be placed in the non-conducting mode, or remain as were prior to failure. Isolation resistance shall be 1000 ohms minimum at 300 VDC between any set of field terminals and any other set or earth ground. Isolation voltage shall be 500 VAC RMS minimum between any set of field terminals and any other set or earth ground. Light-emitting diode type of status indication shall be provided. Maximum number of outputs per card shall be 16.

13) The analog inputs shall accept 4-20 mADC differential inputs from field-mounted transmitters. Common mode input protection of 30 VDC minimum shall be provided. All analog input signals shall be individually isolated; no single ended or common signals are allowed. Maximum number of inputs per card shall be 16. Logical input groups shall be short circuit protected with DIN rail-mounted circuit breakers.

    a) Input signal conversion shall be a minimum of 12-bit word (11-data bits plus 1-sign bit).

    b) Input accuracy shall be 0.1 percent of full scales span. The station shall also be capable of providing dc power for the field transmitters as required.

14) Analog outputs shall convert 12-bit (11-data bits plus one-sign bit) data words into proportional, isolated 4-20 mADC analog output signal to adjust set points of local process controllers, pump speed and valve position. Output load drive capability shall be 600 ohms minimum for each output. Each analog output shall be individually isolated. Logical output groups shall be short circuit protected with DIN rail-mounted circuit breakers. Accuracy shall be 0.1 percent of full-scale output span. Maximum number of outputs per card shall be 16.

15) Response to station or communication system failure shall be selectable such that upon failure the output shall either remain at the last value, or goes to zero (4 mA), as required by the process.

16) I/O for common devices (i.e., pumps configured as duty and spare) cannot occupy the same I/O slot.

17) I/O for each unit shall be arranged per the individual I/O slot.

5. Train PLC I/O Configuration:

a. The Train PLC system shall be provided with sufficient modules to support all of the I/O for all of the process system and support facilities required. Some variations in the configuration will be considered provided the physical and functional constraints as intended for the various system components are met.

1) PLC-Train: Provide I/O chassis with the number of slots as Required to house all CPU, power supplies, I/O and communication modules as required. Module placement shall be per the I/O Listing to be provided by the MSS.

2) I/O Requirements:

a) PLC Train: Provide a minimum spare of 16 discrete and eight analog I/O of each type used or 20% spare capacity in I/O racks of all types. Provide a minimum of eight spare dry contact relays for interfacing with ancillary equipment.

b) All I/O shall be wired to terminal blocks

3) Provide communication modules:

a) PLC/SCADA Communication Level shall be Ethernet

b) Process Level Communication shall be via a separate (isolated from the communication level) Ethernet.

4) Provide required signal and power cables between PLC processors, I/O racks and power supplies, as required.

5) Provide a shelf spare fully redundant PLC for the Train PLC. Only the Train PLC requires this redundant PLC.

6. Unit and Field I/O Configuration:

   a. The Unit and Field I/O system shall be provided with sufficient modules to support requirements by the units and CIP equipment.

      1) Unit and Field I/O shall be configured such that the I/O requirements for a membrane Unit and field mounted panels (CIP, Compressor, Blower) are satisfied by a locally mounted PLC. The only form of communication acceptable from the Train PLC to the distributed I/O is Ethernet. Hardwiring of the Unit I/O to the Main PLC is not acceptable.

      2) Provide a minimum of 4 discrete and 2 analog I/O of each type used or 10% spare capacity in I/O racks of all types

      3) Unit and Field I/O shall include:

         a) Power supplies
         b) CPU (if used) and I/O
         c) Communication modules

      4) Module placement shall be determined by the MSS.

      5) All I/O shall be wired to terminal blocks.

      6) A minimum of two spare dry contact relays shall be provided for interfacing with ancillary equipment.

      7) Provide all required signal and power cables between PLC processors, I/O racks and power supplies.

      8) Each Unit control panel may contain equipment for a maximum of two (2) MEMBRANE Units.

7. PLC Software Programming Requirements

   a. All process logic, sequences, interlocks and alarms required for the continuous operation of the system shall reside at the PLC.

   b. The logic system shall be designed such that in the event of a PLC communication level failure or the failure of a SCADA station, the system shall retain the ability to function without disruption of the process or the intervention of an operator.

   c. Totalization and Runtime values shall reside at the PLC in the form of a non-resettable counter value.

d. Data Logging, Trending and Reporting functions shall reside at the SCADA level.

e. The PLC System shall be programmed using the Ladder Diagram method.

f. Provide as Part of the O&M Manuals, copies of the PLC Ladder Diagram programming. Documentation shall include complete external and internal I/O coil, contact, bit, and word cross-referencing, addressing, loop number and rung numbering.

g. Documentation shall clearly distinguish between internal and real I/O and shall also incorporate extensive English language annotation for each rung to identify contact, coil, and signal functions and for labeling and description of program, sub-program, and rung purpose and action.

h. Provide a listing of external and internal I/O address assignments, register assignments, and preset constant values along with functional point descriptions.

i. Provide a detailed system memory map defining memory segments used and spare memory segments available for system memory, I/O tables, Data Tables, and control program. Identify and list unused/undefined I/O and data table registers available.

8. Communication System Design:

a. The PLC system shall use separate isolated communication networks as follows:

1) Ethernet SCADA between PLC's and SCADA (HMI)

2) Ethernet between PLCs

3) One (1) analog input, one (1) analog output, three (3) discrete inputs, and three (3) discrete outputs to VFDs.

9. Equipment and components

a. PLC Processors:

1) Memory Size: Sufficient memory to provide fifty (50) percent spare memory beyond the memory required for normal functions.

2) Memory Type: Non Volatile RAM with battery back up. The auxiliary battery pack shall maintain memory for a

minimum of two hundred (200) days with no power applied to the processor.

3) I/O Capacity: 8,000 minimum, any mix of inputs and outputs

4) Scan Time: 0.4 ms/k typical

5) Diagnostics:

a) Standard, self-diagnostic routines shall be provided to determine proper hardware and software operation.

b) Diagnostic LED's shall be provided on the processor front panel to indicate the following:

(1) Processor running
(2) Processor fault
(3) Battery low
(4) Forced I/O
(5) Communications active
(6) Communications error

6) Clock: Battery-backed clock with a typical variation of ± 20 seconds per month

b. I/O Chassis and Modules:

1) I/O chassis designed to house the PLC CPU processor, a communication level communication module, a process level communication module, I/O modules required by the MSS.

2) The types of I/O modules available for use with the PLC system shall be the responsibility of the MSS. The following types of manufacturer standard I/O modules shall be available:

a) Discrete (24 or 120) VAC or 24VDC input modules shall be optically isolated.

b) Discrete (24 or 120) VAC or 24VDC relay output modules shall be individually isolated. Isolation may be achieved through the use of non-isolated solid state outputs driving interposing relays. Use an interposing relay if 110VAC or higher amperage is required.

c) Isolated Analog Input modules shall accept 4-20 mA 24 VDC and shall have 12-bit minimum resolution.

d) Isolated Analog Output Modules shall produce an output of 4-20 mA 24VDC with 12-bit minimum resolution. Analog output modules shall allow selectable output response to faults of last output value or zero (0).

e) Combination modules may be used provided that they satisfy the above requirements.

c. Software

1) PLC System Software:

a) PLC programming required to perform the functions described or shown on the Drawings shall be provided by the MSS. The provided system shall be complete, programmed, tested and fully operational.

b) Provide one full copy of programming software

c) Provide any networking or database software required for the installation or mapping of Ethernet or HART instruments.

2) Provide and install programming software on SCADA computer.

D. SCADA SYSTEM

1. Description of the Work

a. MSS shall develop an Operator Interface Terminal (OIT) and Supervisory Control and Data Acquisition (SCADA) system required for the operation, monitoring, trending logging and reporting functions of the membrane system. The SCADA system described in the section is based on the GE iFIX operating software. The OIT shall be based on Rockwell Automation FactoryTalk View ME and shall be an Allen Bradley PanelView Plus 6 1500 with touchscreen, ethernet communication, and keypad or approved equal.

b. The PLC, OIT, and SCADA system shall be programmed / configured by the MSS to perform the functions specified in Paragraph 2.06 B, and support facilities that are to be provided by the Contract Documents.

c. Communication from the VCP-5000 upward to the SCADA's shall be Ethernet as shown on the Contract Drawings. Some variations in the configuration will be considered provided the physical and functional constraints as intended for the various system components are met.

d. MSS supplier shall supply two (2) operator interface terminals. One terminal shall be mounted on the front of the MSS control panel (VCP-5000) and a second shall be turned over to the contractor's system integrator to be mounted in a cabinet (OIT-5000) to be located in the membrane process area.

e. The SCADA screens are to be developed and turned over to the contractor's system integrator to be integrated into the overall plant SCADA system. These screens will have similar monitoring and control functionality that is on the MSS's OIT.

2. General:

a. The MSS shall retain two reproducible copies of the complete system and running software at the supplier's facility for the duration of the warranty period. Software copies shall be maintained on a CD used by the supplier for system program development and shall be directly loadable on the supplied system.

b. Obtain one Development/Runtime packages for the OIT. All licensed software shall be supplied on DVD / Flashdrive and shall become the property of the Fulton County. Include printed O&M Manuals and electronic version on CD. All commercial software provided under this Contract shall be licensed to the Fulton County until the end of the correction period. Provide all software drivers and licenses necessary to support communication, using ODBC, OLE, OPC system configurations and communication formats.

c. Any applicable source code that was developed in order to accomplish specific tasks required by this Contract shall become property of the Fulton County. The compiler used to compile the above mentioned source code shall be turned over to the Fulton County before acceptance testing.

d. Documentation Standards:

1) File Naming Conventions: The MSS shall use the Fulton County's naming convention, or if no convention is available, shall submit a standard file naming convention to the Fulton County, for approval, for programs and data developed during the system configuration. This includes, but is not limited to, custom code, data base files, and graphics displays. The MSS shall follow the naming convention for files developed within the scope of this specification.

2) Program Documentation: Programs and custom code written shall be submitted to the Fulton County. The developer is responsible for properly documenting the code in a manner that expedites future modifications or additions to the program or application.

e. Hard Copy Requirements: Produce hard copy printouts of configuration data developed, including color graphic displays. These printouts shall be submitted to the Fulton County within two weeks after completion of the facility start-up.

3. Equipment Requirements:

a. Provide the Human Machine Interface as specified herein. Provide and install software per the requirements below.

1) Ethernet network modules for communications between the Human Machine Interfaces, Owner-provided computers and the PLCs
2) Software and software drivers as necessary to perform the reporting, alarming, monitoring, archiving, and operator entry functions as specified herein.

b. OIT and SCADA Control System:

1) The system shall be designed by the MSS to monitor, store, display and log process and equipment operating information and alarms. The SCADA system shall also be designed to perform various process control functions and generate various reports on PC equipment. The SCADA system shall function as a monitoring system, not as a controller, for the process equipment. The SCADA system shall download data to the PLC and the PLC system shall perform all control algorithms.

2) The system will be designed such that it may interface with the Fulton County SCADA system which is based on GE iFIX SCADA software. The MSS shall provide all registers and database information to the Fulton County to allow integration of the redundant SCADA system and provide any coordination for data transfer needs between the MSS system and the Fulton County System.

3) The system shall also be programmed for flexible alert notification to Fulton County pagers, on the condition of plant shutdown. This system shall be based upon Wonderware messenger software, or applicable add-ons.

c. Communication:

1) The software shall support communication with the PLC device Interface driver using the Ethernet or ControlNet communication protocol. Software and software drivers shall be provided as necessary to perform the reporting, alarming, monitoring, archiving, and operator entry functions as specified herein.

d. Graphic Displays:

1) The graphic displays will incorporate the detail as shown on the P&ID along with dynamics and variables available from the supplied instrumentation. The graphic displays shall incorporate 3D style graphics as described in specification section 17315.

2) Custom graphics shall incorporate, but not be limited to, the following features and functions:

a) The equipment numbers will identify equipment as they are assigned on the P&IDs.

b) Process lines and equipment will be color-coded. The color scheme shall be proposed to the Fulton County for approval.

c) Process lines will have directional flow arrows and will enter and leave the related graphics displays at approximately the same screen location (from display to display).

d) Process lines will have a description depicting line origin and destination.

e) Process lines will be "targeted" where they enter and leave the graphics page so that the operator can select the target and call up the related graphics display, giving the effect of flowing between displays.

f) The operator shall have full control and functionality, from the custom graphics display, of any point appearing within the display. This includes, but is not limited to, set point changes, mode changes, controller tuning, alarm set point adjustment and similar point features.

3) Detailed graphic display development shall incorporate, but not be limited to the following features and functions:

a) All static equipment (no instrumentation) shall be white in color.

b) Running equipment shall be red; stopped equipment shall be green.

c) Only valves that can be operator or digital system controlled will be represented on the graphics.

d) Two-position valves with positive feedback will be red when open, green when closed, and yellow when in transition / fault.

e) Analog control valves will be the color of the process line in which they are installed and will have a percent open indication value next to them. This value is actually the controller output if positive feedback is not available. In cases in which analog control valves have limit switches for position indication, the valve should turn red when closed.

f) Alarms shall be indicated within the graphics by changing devices or points to colors dependent on the type and severity of the event. The proposed alarm annunciation scheme shall be submitted to the Fulton County for approval.

g) The operator shall be able to acknowledge active alarms from the custom display.

h) Schematic displays shall be logically arranged and connected so that the operator can move from

display to display by using targets, or selectable points, on the graphics.

i) The operator shall be able to access the control graphic displays related to the detail graphic system schematic directly from the graphics display.

j) If the equipment is involved in batch production (i.e., CIP make-up), appropriate information that details the status of the batch recipe shall be incorporated into the display. In addition, operator control functions with respect to the execution of the batch procedure shall also be available on the graphics display.

4) Control Schematics Displays:

a) The MSS shall provide a set of recommended custom displays that incorporate the primary control and monitoring data necessary for the operation of facility units. These displays, or overviews, will be used to operate a process that would normally appear spread out over several detail control schematic displays.

b) Control schematic displays shall incorporate, but not be limited to, the following features and functions:

(1) The operator shall be able to access the related detail control schematics directly from the associated graphics display.

(2) If alarms are present on a detail system schematic, this should be reflected to the operator on the control schematic display.

(3) An overall batch execution display for chemical batching and Membrane Filter units rotation and cleaning shall be developed that allows the operator to view a summary of all of the executing batch recipes in the facility, along with the status of each.

c) Plant Overview Display: The MSS shall develop and submit its recommendation for the overview

graphics display. The display shall summarize the entire facility in a fashion that allows the operator to access any control display in the system by selecting an area or unit from the graphics.

d) Control System Display: The MSS shall develop and submit its recommendation for overview graphics displays that will represent the PLC system in a dynamic format for PLC's, SCADA's, printers, and data highway status. This overview shall include PLC's. Include diagnostics and status for each PLC processor, I/O module and Communication module.

e) Maintenance and Help Screens: The MSS shall develop and provide to the Fulton County the recommended maintenance and help screens for each custom graphic display schematic in the system. These displays shall incorporate this use of hypertext to assist the operation and maintenance personnel in use of the control system, and in monitoring, operation and troubleshooting of the plant operating systems and equipment. They will include operational procedures, equipment lists, control descriptions, and similar informative data. The Fulton County will work in conjunction with the Contractor on the definition and format of these displays.

5) The following screens, as a minimum, are suggested for the operator interface:

a) Computer System and PLC Overview
b) Plant Overview
c) UNIT Overview (1 per UNIT)
d) UNIT Status (1 per UNIT)
e) CIP/CW Overview
f) CIP/CW Acid
g) CIP/CW Hypochlorite
h) Plant Set points
i) Historical Trends
j) Plant Real-time Trends
k) UNIT Real-time Trends (1 per UNIT)
l) Equipment Runtime
m) Alarms
n) Reports

6) Help

4. Data Logging and Trending: Data Logging and Trending shall use commercially available software packages. MSS proprietary software trending packages are prohibited. Data displayed or reported at the Human Machine Interfaces shall be stored in historical data files. Programming of the Data Logging and Trending Functions will be performed by the MSS. The system shall maintain historical data on the hard disk for a period of 45 days minimum up to 90 days maximum before being archived. System shall archive collected data on a monthly basis (30 or 31 day's worth of data). The archived data shall be readily available for import and subsequent reporting at any time. Historical data shall be available for use in reports and trends. Historical trend screens will be provided for, as a minimum, the following:

   a. Log and Trend all analog process values including:

      1) Pressure
      2) Flow
      3) Level
      4) Temperature
      5) Turbidity
      6) Modulating Valve Position
      7) VFD Speed
      8) Analyzer Instrument Value (pH, conductivity, residual)

   b. Log and Trend unit operational performance data (1 per UNIT).

      1) Process Values as indicated above

      2) Permeate Set-point

      3) Permeate Turbidity

      4) Calculated Membrane Resistivity or Permeability (Temperature Compensated)

      5) The PLC shall calculate and log the values for clean in place functions including:
         a) Not Used
         b) Not Used
         c) Time and Clean Water Membrane Resistance (or permeability) from last Clean in Place.

   c. Logging shall only occur when the device is operational or in an otherwise active state.

   d. For process sequences (backwash, relaxation and backpulse), data logging shall be event driven and occur at the midpoint of the

process sequence, or more frequently if required by the Fulton County.

e. To maintain the provisions of its warranty, the MSS shall establish the minimum logging frequency for each item. The Fulton County shall have the ability to increase the frequency of data logging at its option.

f. Data logging shall provide historical data logging to the hard drive trend points. Data shall be saved in a format that can be easily retrieved and manipulated in (Excel) .xls format.

g. The PLC shall calculate the daily totalized, and display and log the totalized flow for all installed flow meters including:

1) Filtered Water Flow (Plant)
2) Unit Filtered Water Flow
3) Backwash Water Flow

h. The operating screen shall display the totalized flow passed through the flow meter for the current day as well as any 24 hour period (6-am to 6-pm, 12-am to 12-pm). The final desired format of this shall be established by the Owner.

i. The operating screen shall display a non-resettable flow totalizer of at least 8 digits of accuracy with ranges (or decimal point placement) selected for 5 years of continuous operation.

j. The PLC shall totalize and log runtimes for the process equipment including:

1) Membrane Units
2) Pumps
3) Compressors

k. Alarms:

1) The operator interface software supplier shall coordinate alarm processing and reporting. All alarms shall be logged and printed along with the data and time when they first occur, when they are acknowledged, and when they return to normal. The alarms shall be displayed on a common alarm summary screen and on the graphic display associated with the alarmed process.

2) The MSS shall provide a list of alarms to the Owner for incorporation into the SCADA system.

3) The software shall have the ability to acknowledge individual alarms, groups of alarms, or alarms via a single keystroke or pre-configured automatic response.

4) The software shall be able to be configured to either require operator ACK or alarm before clearing, or to imply ACK when the alarm condition is no longer presents.

5) The software shall be able to display alarm status via color change or blink in line, text, or fill attributes.

6) The software shall have both alarm summary and alarm history displays with configurable message text including: DATE, TIME, TAGNAME, ALARM EVENT, ALARM TYPE, VALUE, SETPOINT, COMMENT.

7) The alarm summary and alarm history displays shall be configurable for color of alarm window, new alarms, ACK alarms, and RTN alarms.

8) Alarms shall be able to be routed to screen, printer, and/or disk file.

I. Report Formats and Requirements

1) General

a) The software reporting package shall be capable of generating the following types of reports using standard software packages including Excel, Access and Crystal Reports. Reports shall be generated by sorting the actual database of data. Reports shall be capable of being manually initiated or automatically initiated.

b) The report generator shall be able to reprint a report from the system by entering the appropriate date, time, month or year and the report desired.

c) The MSS shall create a set of custom reports using standard software packages that provide process information as shown on the Drawings and as specified herein.

d) Reports shall be created to provide a record of plant process conditions. The reports shall access the real time I/O and historical data bases and shall include such calculated values as run times, totals,

averages, minimums, and maximums over hourly, daily, weekly, and monthly time intervals, in addition to current (snapshot) data values. Reports shall be created in an appealing and useful format by the MSS.

e) Prepare and submit a draft sample of each type of report to be approved by Fulton County and Engineer before the development of the entire report package. The MSS should expect and provide for direct Fulton County participation on the conceptual development of custom process reports. Each report created for the system shall be approved and accepted by the Fulton County before being considered complete. The MSS shall allow Fulton County to operationally review each report for comments before the report is issued as complete.

f) Programs written for the process reports shall be submitted to the Fulton County for approval. The Developer is responsible for properly documenting the code in a manner that expedites future modifications or additions to the program or application. Two complete iterations of comments and /or review shall be provided.

g) Any applicable source code or macros used for this project shall become property of the Fulton County.

h) Regardless of the type of report, all reports shall be generated within one minute after initiation (either automatic at 12:00 am time or manually from SCADA screen).

i) The MSS shall be responsible for producing hard copy printouts of configuration data developed, including custom reports. These printouts shall be submitted to the Fulton County within two weeks after completion of the facility start-up.

2) Daily Summary Report

a) The daily report shall be capable of summarizing plant operation from 12:01 a.m. of the previous day through 12:00 a.m. of the current day.

b) Values for which there are no data available shall be left blank or identified with a special character. Thus, only values, which are actually zero, shall be printed as such.

c) The Daily Report shall be available for printing on demand, as often as preferred, until midnight of the following day. Normal operation shall be for reports to automatically generate at an operator specified time on a daily basis.

3) Monthly Operation Summary Report

a) The Monthly Operation report shall be capable of summarizing plant operation for the previous calendar month. The report shall be generated on demand from the Operator's Console, usually after all results for the previous month have been entered. The information printed shall consist of daily averages or totals.

b) The report format shall be similar to the daily report, and shall consist of: the month and year, plant name, report name, page number, group headings, sub-headings, point identifications, engineering units, and a table of daily averages or totals for points included on the page. Monthly minimum, average, maximum, runtimes, and totals, where applicable, shall also be printed for each column of points printed.

c) The Monthly Operation Summary Report shall be available for printing on demand during the entire following calendar month. However, normal operation shall be for reports to automatically generate on the first of the month at 12:00 a.m.

4) Annual Plant Operation Summary Report

a) The Annual Plant Operation Summary Report shall be capable of summarizing plant operation for the previous calendar year. The report shall consist of monthly averages or totals for important plant variables and manual inputs, stored on-line on the disc.

b) The format of the report shall be identical with the Monthly Operation Summary Report with the

exception of the month being deleted from the heading, replaced by the year and the date column replaced by calendar months.

5. Network Communications - The MSS shall furnish and install a complete 100 Base T Ethernet Local Area Network (LAN), fiber optic Ethernet network and a remote I/O network capable of supporting communications between all local process area control system components. The MSS shall furnish all necessary cables (12 feet or less in length), face plates, connectors, modems, required for a complete and operational network.

   a. Data Highway communications between the local area server, operator's workstation, and the DPCs shall be IEEE 802.3 Compliant Ethernet and shall have a minimum baud rate of 10/100 Mbps.

   b. The system shall store message error and message traffic counters used to calculate data link performance for DPC communication. Counters shall be maintained for block check errors, Longitudinal Redundancy Check (LRC) errors, parity errors, missed bytes, frames received, and security disconnects. Alarms shall be provided to alert plant personnel of communication link problems.

6. Ethernet Switch

   a. The area PLC, and SCADA shall be connected to the network backbone through a redundant10/100 Industrial Rail Ethernet Switch. Switch shall support fault tolerant ring architecture and shall provide full duplex optical waveguide (FO) uplink capability and redundant power. 10/100 Industrial Rail Ethernet Switch shall provide a minimum of 12, 10/100 Fast Ethernet ports, plus one stand-by port via RJ45 interfaces and one V.24 interface for external management. Two ports with SC connectors shall be provided for integrated connectivity to the future fault tolerant Network backbone.

   b. Unit shall provide for installation of a minimum of 4 ports

   c. Provide total number required by MSS design with 50 percent or greater spare capacity.

   d. Frame Switching Functions

      1) All data received by the Switch from the system bus or at the ports shall be stored and checked for validity. Invalid and defective frames as well as fragments shall be discarded. The switch shall forward valid frames.

2) The Switch shall learn all source addresses per port. Only packets with: unknown addresses, this address or a multi/broadcast address in the destination address shall be sent to this port. The Switch shall be capable of learning two thousand (2,000) addresses.

3) The Switch shall monitor the age of the learned addresses. The Switch shall delete address entries from the data table that exceed a certain age.

4) The Switch shall support two priority queues. The classification of received data packets to these classes shall be done by: the pre-defined classification in statistical address entries and the priority of the data packet included in the VLAN packet

5) On data packets with VLAN tags the Switch shall analyze the 3-bit priority field. Data packets with VLAN tags and a maximum long data field shall be transmitted. Data packets received without VLAN tags shall be transmitted without VLAN tags.

e. Specific Functions of the TP/TX Interface

1) The Switch shall monitor the connected TP/TX line segments for short-circuit or interrupt using regular link test pulses in accordance with IEEE standard 802.3 10/100BASE-TP/TX. The Switch shall not transmit any data in a TP/TX segment from which it does not receive a link test pulse.

2) If the reception line pair is incorrectly connected (RD+ and RD-switched) polarity shall be automatically reversed.

f. Self-Healing Functions

1) The Switches shall allow the FO backbone to assimilate a ring or spanning tree architecture. If one switch fails or the fiber optic backbone cable is cut, the ring structure shall change itself into a line structure within 0.5 seconds with up to 50 Switches on the network.

g. Voltage Supply

1) The voltage supply shall have a redundant power supply from the Uninterruptable Power Supply (UPS).

h. Management

1) The Switch shall support SNMP and Web-based management for extensive diagnosis and configuration functions to allow easy startup procedures and provide network and device information. The Switch shall support the TCP/IP protocol family.

7. Panels:

a. Panels shall be designed in accordance with NEC requirements and shall utilize UL listed electrical components. Instruments shall be as identified above. Panels shall be constructed in accordance with UL508 standards.

b. MSS shall furnish enclosures to house equipment, instruments, front panel mounted devices, power supplies, power distribution panels, UPS, wiring, tubing, and other components installed in the enclosures.

c. Provide electrical and/or pneumatic components and devices, support hardware, fasteners, interconnecting wiring and/or piping required to make the control panels complete and operational units. Provide bulkhead fittings for air piping and tubing leaving control enclosures.

d. Provide lightning and surge protection for panel components.

e. MSS shall locate and install devices and components so that connections can be easily made and so that there is ample room for servicing each item.

f. Exterior panel mounted instruments shall have a NEMA rating equal to the enclosure. For devices that cannot be obtained with a NEMA rating equal to the enclosure, mount the device behind a transparent viewing window. The window shall maintain the NEMA rating of the enclosure.

g. Where permitted by location and layout, panels and enclosures shall have full height front access doors.

h. Provide sub panels for installation of internally mounted components.

i. Provide mounting strips for installation of relays and other components where mounting strips are practical.

j. Wiring to panel connections from field instruments, devices, and other panels shall be terminated at master numbered terminal strips, unless otherwise specified.

1) All terminal blocks to field mounted equipment shall be individually fused with a visual blown fuse indication.

2) All field input devices shall use 24 VDC power.

3) All field output devices shall powered from the PLC using 24 VDC or 24VAC power. Use an interposing relay if a higher voltage is required.

4) Provide a minimum of 2 spare interposing relays per control panel.

k. Power Source and Internal Power Distribution:

1) General: Each of the membrane unit LCP's shall be provided with a 120VAC, 60 Hz circuit. The circuit shall be for its PLC system, power supplies, and unit mounted field devices. This circuit shall have lightning and surge protection and shall be powered from an uninterruptable power supply (UPS) mounted in the panel. The UPS shall be designed to power the panel for 30 minutes. The circuit shall also be for auxiliary equipment, such as the interior light, receptacle and heating/cooling equipment. The 'MAIN' LCP shall be furnished with a 120VAC, 30A, 60Hz circuit. The circuit shall be for its PLC system, power supplies, and field devices. The circuit shall also be for auxiliary equipment, such as the interior light, receptacle and heating/cooling equipment. This circuit shall have lightning and surge protection and shall be powered from an uninterruptable power supply (UPS) mounted in the panel. The UPS shall be designed to power the panel for 30 minutes. Provide transient voltage surge suppressor(s) in each panel to eliminate electrical noise and/or transients entering on the panel supply circuit(s). Each interior and exterior device that receives power from the UPS supply circuit shall be individually protected with a circuit breaker or a fuse.

2) The panels and enclosures shall be provided with internal 120 VAC DIN rail mounted 10KAIC rated circuit breakers sized as required to distribute power to the panel components. Provide quantity of circuits as shown on the Drawings or as required. Circuit breakers shall be Allen Bradley Bulletin 1492-CB, 1492-GH, or approved

equivalent. Provide a durable legend mounted near the circuit breakers in each panel that lists the circuit breaker numbers and functional descriptions.

3) Provide DC power supplies of quantities and sizes as required for powering DC signal and control loops as shown on the P&IDs.

4) Provide automatically controlled heaters as required to maintain temperature approximately 10 degrees F above ambient for condensation prevention inside panels.

5) Provide internal corrosion inhibitor devices, Hoffman HCI Series or approved equivalent, for corrosion control inside of each enclosure.

6) Panels and enclosures shall meet the NEMA requirements for the type specified and/or shown on the Drawings.

7) Wire all unused PLC inputs and Outputs to terminal blocks.

l. Provide the following convenience accessories inside of each free standing control panel:

1) At least one 120 VAC, 15A duplex, grounding type receptacle.

2) At least one 120 VAC fluorescent light fixture with minimum 40 watt lamp and protective plastic shield.

3) One 120 VAC, 15A, snap switch in an outlet box with a cover to turn on the light. The switch shall be located so that it is easily accessible from the door.

4) The service light with switch and duplex receptacle shall have a circuit breaker.

m. The bottom 12 inches and top 12 inches of free standing panels shall be free of all devices, including terminal strips, to provide ease of installation and testing.

n. The panels shall have the components oriented to allow top entry of the conduits for power and control wiring.

o. Front panel indication and control devices shall be mounted within a range of 40 to 70 inches above the operating floor. No indication or control devices shall be mounted less than 36 inches above the

operating floor level unless otherwise specified or shown on the drawings.

p. Wiring shall be installed such that if wires are removed from any one device, power will not be disrupted to any other device.

q. All alarms generated external to the panel, spare alarm, and repeat contacts shall be wired out to terminal blocks.

r. Use separate, isolated 5/16-inch diameter copper grounding studs or 1/4 inch thick drilled and tapped copper bus bars for instrument signal cable shield grounding connections and instrument power/equipment grounding system. Shield grounds shall be completely isolated from the enclosure instrument power/equipment grounds.

s. Where wires pass through panel walls, provide suitable bushings to prevent cutting or abrading of insulation.

t. When DC power and/or low voltage AC power is required, provide and install the necessary power supplies and transformers in the panel. 110 VAC for equipment within the panel shall be powered by an isolated and fused transformer located in the panel.

u. Provide circuit breakers to protect each PLC I/O card.

v. Spare field wires within each panel or enclosure shall be coiled, and each coil shall be labeled with the wire destination. Neatly arrange spare wire coils in the bottom of the enclosure.

w. Provide complete wiring diagram showing "as built" circuitry. Diagram shall be enclosed in transparent plastic and placed in easily accessible pocket built into panel door.

8. Panel Fabrication and Material Requirements (Materials of Construction)

a. Control panels shall be fabricated in accordance with the NEMA ratings specified.

b. Provide lifting eye bolts to facilitate handling of the enclosures, where enclosure size requires. Bolt lifting eyes directly to the enclosure structural members.

c. Continuously weld exterior seams and grind smooth.

d. Reinforce sheet steel with steel angles where necessary to adequately support equipment and ensure rigidity and to preclude resonant vibrations.

e. Panel shall be flat within 1/16-inch over a 24-inch by 24-inch area, or flat within 1/8-inch for a larger surface. Flatness shall be checked by using a 72-inch long straight edge. Out-of-flatness shall be gradual, in one direction only, and shall not consist of obvious depressions or a series of wavy sections.

f. Use pan type construction for doors. Door widths shall not exceed 36 inches.

g. Mount doors with full-length heavy-duty piano hinge with stainless steel hinge pins.

h. Provide oil resistant gasket completely around each door or opening.

i. Use stainless steel fasteners throughout.

j. Provide interior mounting panels and shelves constructed of minimum 12-gauge steel with a white enamel finish.

k. Provide steel print pocket with white enamel finish for floor mounted panels.

l. Provide enclosure mounting supports and/or bases as required for floor, frame, or wall mounted enclosures, and for free standing enclosures.

m. Panels outside of control rooms shall have solid bottoms.

n. Cable and piping shall enter the enclosure through the bottom. Conduit and piping openings and conduits shall be sealed watertight.

9. Control panels located inside control room and electrical room areas shall be NEMA 12 rated.

a. Fabricate enclosures using minimum 14-gauge steel for wall or frame mounted enclosures and minimum 14 gauge for floor mounted and free standing enclosures. Steel shall be free of pitting and surface blemishes.

b. For floor mounted enclosures, provide minimum 12 gauge steel floor stand kits bolted to the bottom of the enclosure and sealed and gasketed to maintain NEMA 12 rating. Floor stand heights shall be coordinated with enclosure sizes and base pads so as to comply with the general indication and control device mounting height requirements as specified herein and/or as shown on the

drawings. Floor stands shall be mounted on base pads using anchor bolts and/or expansion anchors as specified in Part 3.

c. Free standing enclosures shall be constructed with an integral fully enclosed solid bottom section at least 6 inches in height from the bottom of the enclosure to the bottom edge of the enclosure door opening. Freestanding enclosures shall be mounted on base pads as specified in Part 3.

d. Provide handle-operated, oil-tight, key-lockable three-point stainless steel latching system with rollers on latch-rods for easy door closing.

e. Completely clean interior and exterior surfaces so they are free of corrosive residue, oil, grease, and dirt.

f. One coat of primer shall be applied to interior and exterior surfaces immediately. Exterior surfaces shall then be given sufficient coats of primer, applied with sanding and cleaning between coats, until a Grade 1 finish can be produced on the finish coat.

g. Interior surfaces shall be painted with 2 coats of semi-gloss white enamel.

h. Exterior surfaces shall be painted with a minimum of 3 finish coats of enamel to ultimately produce a Grade 1 finish (super smooth; completely free of imperfections). Color to be selected from color charts submitted by the Contractor.

i. Primer and finish paint shall be compatible and shall be Sherwin-Williams "Polane T Polyurethane Enamel" or approved equivalent.

j. Provide one extra quart of touch-up paint for each exterior finish color.

10. Control panels not located in control rooms or electrical rooms shall be NEMA 4X rated.

a. Panels shall be Type 316 stainless steel construction with a minimum thickness of 14 gauge for all surfaces (except those areas requiring reinforcement) having a smooth brushed finish.

b. For floor mounted enclosures, provide 304 stainless steel floor stand kits bolted to the bottom of the enclosure and sealed and gasketed to maintain NEMA 4 rating. Floor stand heights shall be coordinated with enclosure sizes and base pads so as to comply with the general indication and control device mounting height

requirements as specified herein and/or as shown on the drawings. Floor stands shall be mounted on base pads using anchor bolts and/or expansion anchors.

c. Free standing enclosures shall be constructed with an integral fully enclosed solid bottom section at least 6 inches in height from the bottom of the enclosure to the bottom edge of the enclosure door opening. Freestanding enclosures shall be mounted on base pads.

d. Provide stainless steel fast-operating clamp assemblies on three sides of each door.

e. Provide a rolled lip around three sides of door and along top of enclosure.

f. Provide a hasp and staple for padlocking. Provide padlock for each enclosure, all keyed alike.

g. Provide Type 316 stainless steel sun shielding for outdoor panels. Panels exposed to the sun.

h. Provide a clear plastic, NEMA 4, gasketed, lockable, hinged door to encompass non-NEMA 4 front of panel instruments.

11. Electrical Wiring and Accessories:

a. Unless otherwise specified, internal wiring shall be Type MTW stranded copper wire with thermoplastic insulation rated for 600 V at 90 degrees C for single conductors, color-coded and labeled with wire identification.

b. Internal Panel PLC Wiring Color Code:

1) 120 VAC Control shall be red
2) 120 VAC Supply shall be black
3) 24 VDC Control shall be blue

c. For DC signal wiring, use 300 V No. 18 minimum AWG twisted pairs with overall shield.

d. For AC power wiring, use No. 14 minimum AWG. For AC and DC signal and control wiring, use No. 18 minimum AWG. For wiring carrying more than 15 amps, use sizes required by NEC and NFPA 79 standards.

e. Install wiring runs in wire troughs along horizontal or vertical routes to present a neat appearance. Angled runs are not acceptable.

f. Separate and shield DC signal wiring from power and control wiring by a minimum of 4 inches, using separate wire troughs.

g. Where possible or practical in the panels and enclosures, route the low voltage DC signal wiring along the right portion of the enclosure sub-panel(s) and route the AC power and control wiring to the left portion of the sub-panel(s), with the incoming power and distribution circuit breakers located to the upper left.

h. Group or bundle parallel runs of wire using covered troughs. Maximum bundle size to be 1 inch. Troughs shall have 40 percent spare capacity.

i. Adequately support and restrain wiring runs to prevent sagging or other movement.

12. Terminal Blocks:

a. Terminate field wiring and internal panel wiring at 600-volt barrier type terminal blocks, Allen Bradley Catalog number 1492-CA1 or approved equivalent. Use colored terminal blocks that match the wiring colors.

b. Terminal blocks shall be tubular screw type with pressure plate capable of accepting #22-#8 wires and shall be mounted on rigid steel rail.

c. Heavy-duty end anchors shall be provided on both ends of terminal strips to firmly anchor the terminal blocks to the mounting rail and insulating end barriers shall be provided on one end of the terminal strip as necessary.

d. No more than two wires shall be terminated at any single screw. Provide jumpers as required to join adjacent terminal blocks for additional wiring connection points.

e. Terminal blocks shall be labeled with permanently affixed numeric identifiers on each block. Identifiers shall be self-stick plastic tape strips with permanent, machine printed numbers.

f. Provide a separate terminal block for landing each analog signal cable shield.

g. Provide separate terminal strips for DC signal and AC power wiring.

h. Provide spare terminal blocks equal in number to 20 percent of the terminals used for each type of wiring (i.e., DC signal and AC power).

13. Fused Terminal Blocks:

a. Provide fused terminal blocks with blown fuse indication for wiring powered from within panels or enclosures to devices located outside the panel or enclosure. This includes the PLC input and output cards. Fused terminal blocks shall be Allen Bradley catalog number 1492-CE6, or approved equivalent.

b. Fused terminal blocks shall be UL approved, 600 V, capable of accepting #22-#10 wires, and shall be mounted on rigid steel rail.

c. Heavy-duty end anchors shall be provided on both ends of terminal strips to firmly anchor the terminal blocks to the mounting rail and insulating end barriers shall be provided on one end of the terminal strip as necessary.

d. Provide fuses (sized as required) and fuse pullets for fused terminal blocks..

14. Wire Markers:

a. Panel wires and field wires shall have an alphanumeric identification tag at each point of termination.

b. Where practical, wire numbers shall be unique and continuous. Where wire numbers change, the appropriate drawings shall include both wire numbers, clearly indicated, at the point of transition.

c. Each wire number shall be solid, machine printed and not pieced from other single and/or double digit tags.

d. Wire markers shall be heat, oil, water, and solvent resistant, vinyl, self-laminating, self-adhesive, wrap type labels as manufactured by the W.H. Brady Co. or approved equivalent.

e. Wire labels shall be clearly visible and not hidden by wire duct or other components in the enclosures.

2.08 SPARE PARTS

The MSS shall provide the following spare parts:

Description	Quantity
Pressure gauge	2 each range
BFV1 and Type 1 Actuator	1 of each size
BFV1 valve seat	3 of each size
BFV5	2 of each size
Pump Mechanical Seal	1 for each pump supplied by
Pneumatic Solenoid	3 of each type
O-ring kit, module	10 of each type
Relief Valve	1 of each type
AC/DC Power Supplies	1 of each type
PLC CPUs	1 of each type
PLC I/O Modules	1 of each type
PLC Power Supplies	1 of each type
Fuses	6 of each type
Terminal Blocks	6 of each type
Relays	3 of each type

A list of recommended spare parts required for normal operation and maintenance for the specific membrane system shall be submitted for approval in addition to the above listed spare parts.

Spare parts shall be packed in sturdy containers with clear indelible identification markings and shall be stored in a dry, warm location until transferred to the Owner at the conclusion of the project.

2.08 SPECIAL TOOLS

The MSS shall provide special tools required for disassembly and reassembly or analysis of membrane modules.

MSS shall provide equipment required for operations staff to service membrane cassettes set below the membrane system cover elevation.

The MSS shall provide equipment for measuring cassette or sub-unit integrity.

2.09 LUBRICANTS

The MSS shall provide all lubricants in conformance with NSF standards.

PART 3—EXECUTION

3.01 DELIVERY AND INSTALLATION

The MSS shall provide training to the Contractor for all supplied membrane filtration equipment (Equipment) including associated ancillary components. Installation instructions include any and requirements prescribed by the MSS or its manufacturers for the proper unloading, handling, assembly, placement, connection, or wiring of the Equipment. The training shall be conducted on-site by an authorized, experienced, employee of the MSS.

The MSS shall plan for a minimum of 8 days of on-site assistance during the Delivery and Installation and a minimum of 2 trips. This time is not to be included in the days allotted for commissioning or acceptance testing.

An employee of the MSS shall be present on-site to witness and supervise the unloading and the proper placement and positioning of the membrane units and significant ancillary equipment.

The representative of the MSS shall also be present to oversee the assembly installation of the associated anchor bolts for MSS furnished equipment.

The MSS shall be responsible for identification of the volume and concentration of the membrane module storage solution and rinsing requirements for membrane modules. The Contractor shall be responsible for proper disposal of the spent storage solution and rinse water.

The Contractor will be responsible for making any adjustments and / or modifications to the installation process that may become necessary to ensure that all equipment is properly installed.

After the installation is complete, the MSS, Contractor, Owner and Engineer shall jointly perform a pre-commissioning inspection of the System. The inspection shall identify the following:

1. Mechanical:

    a. Membrane Units will be completely installed and unit and interconnecting piping pressure tested.

    b. The Permeate Pump System will be completely installed and the piping pressure tested.

c. The Clean In Place system will be completely installed and pressure tested.

d. The Compressed Air System will be completely installed and the piping pressure tested.

e. The Air Scour system piping will be completely installed and the piping pressure tested.

2. Electrical:

a. All local control panels will be installed and terminations completed.

b. All 480, 120, and 24VDC power supplies will be connected and verified.

c. The documentation associated with the inspection of electrical terminations will be provided by the Contractor to the MSS.

3. Membrane Modules:

a. The membrane modules shall not be installed until Commissioning has commenced.

b. The MSS shall oversee the installation of the membrane modules by the Contractor. The location and serial number of each membrane module shall be provided using a Microsoft Excel Spreadsheet. This information will be used to document Membrane Warranty replacement. Membrane module information shall be collated and submitted to the Owner as part of the Commissioning Test Reports Manual.

The Contractor will be responsible for making any adjustments and/or modifications to the installation process that may become necessary to ensure that all equipment is properly installed.

1. The inspection will identify any equipment that has not been properly installed, detailing the outstanding installation issues on a “punch list” and noting the party who shall be responsible for each correction and identify the items that require correction before commissioning can begin.

2. Once the corrections identified have been made and the MSS provides written certification that the equipment has been installed properly, a ‘Notice of Completed Installation” will be issued by the Engineer and commissioning shall commence in accordance with the requirements of this specification.

3.02 FACTORY ACCEPTANCE TEST

The purpose of this test is for the MSS to pre-test the Contract equipment at the Manufacturer's facility, to ensure it is operational and ready for installation at the jobsite. Each panel shall be tested by the MSS following the pre-approved test procedure, and with power applied to the panel. The PLC inputs and outputs shall be simulated at the panel field wiring terminal blocks using the test panels. Connect the PLC RIO or DIO to the remote processor. Configure a test PLC program for each PLC to allow checking of all simulated field I/O, using the specified PLC programming software. The test shall be performed on an input/output point-by-point basis. The MSS shall rectify all deficiencies found prior to shipment to the jobsite.

3.03 COMMISSIONING

MSS shall be responsible for providing labor, materials, equipment, and incidentals necessary to perform and coordinate the commissioning of the wastewater and thickening membrane systems.

Commissioning shall not commence until the "Notice of Completed Installation" is issued.

The MSS shall provide a minimum of 25 days of Commissioning not including the acceptance testing and shall include a minimum of 5 trips during the commissioning period.

Unless otherwise approved by the Owner, the MSS shall not plan for Commissioning to be allowed except during normal business or construction hours, 5 days per week, 8 hours per day.

MSS shall be responsible for providing a detailed commissioning schedule for all tasks associated with the startup and commissioning of the equipment for each membrane system. The schedule shall be submitted a minimum of 30 days prior to the commissioning start date and shall be updated as often as necessary or requested during the commissioning period to ensure appropriate coordination with the Owner and Installation Contractor.

Commissioning shall be performed for the following systems:

1. Wastewater and Thickening System

    a. Basins
    b. Permeate Pumps
    c. Scour Air System
    d. Compressed Air Systems
    e. Backpulse/Relax System
    f. Maintenance Clean Systems
    g. Recovery Clean Systems

MSS shall be responsible for initial operation of the PLC control system and shall make any required changes, adjustment or replacements for operation, monitoring, and control of the various processes and equipment necessary to perform the functions intended.

MSS shall perform checkout and start-up of system components. As part of these services, the MSS shall include for those equipment items not manufactured by him the services of an authorized manufacturer's representative to check the equipment installation and place the equipment in operation or provide letters from manufacturers authorizing the MSS to put equipment in operation.

No system or subsystem shall be started-up for continuous operation unless all Equipment, including instrumentation and monitoring systems, of that system or subsystem have been tested and proven to be operable as described in the Contract Documents.

The MSS shall coordinate all commissioning activities with the Contractor, Owner and Engineer. The types of activities to be performed by the MSS will be detailed in the “Detailed Plan of Commissioning Activities” include but not necessarily limited to the following items:

1. Initial Startup Activities

    a. Verify Unit and Piping Installation
    b. Verify Valve Tags
    c. Verify Data Highway System
    d. Verify PLC Communication
    e. Verify PC or Operator Interface Communication
    f. Verify system interconnections

2. Commissioning Activities

    a. Verify Pumps for Rotation

    b. Commission Compressed Air System (PLC Interface)

    c. Commission Blower System (PLC interface)

    d. Test Modulating Valves

    e. Test Chemical Feed Systems used for feed, backwash, and filtered water

    f. Test Chemical Feed Systems used in Clean In Place and/or Maintenance Clean

    g. Test Level Switches in Tanks

    h. Test Pressure Switches

    i. Set Mechanical Seals in Pumps and Flush System.

j. Test and Calibrate Process Instruments supplied by MSS

1) Flow Meters
2) Pressure Transmitters
3) Level Transmitters
4) Turbidity Meters
5) Temperature Transmitters

k. Miscellaneous Equipment

l. Field Located Manual Valves

m. Field Located Automatic Valves

n. Manual Unit Valves

o. Automatic Unit Valves

p. Flush Piping Systems

3. Startup Activities:

a. Perform an Operational Readiness Test (ORT). PLC and hardware and software shall be tested to verify proper operation as an integrated system. System testing shall include, as a minimum, the following:

1) Digital inputs shall be activated at the field element to verify proper response to the status change and automatic control algorithm stability. Control loops shall have the PID values recorded, in a separate file location so in event of a system failure the process parameters can be restored.

2) Analog inputs shall be tested at the field transmitter over a full range to verify proper response.

3) Digital and analog outputs shall be forced to verify proper control operation.

4) Communications, including PLC data highway, computer local area network, PLC remote I/O, and serial communications shall be tested between all components.

5) Alarm displays shall be tested for analog and digital alarm points. Alarm set points shall be recorded in a separate location, so that in event of a system failure the process parameters can be restored.

6) Automatic control algorithms shall be completely tested over various ranges and input conditions to verify proper operation. Displays shall be observed to verify proper response to automatic control operations.

7) Historical data collection, trending, computation, totalization and reporting functions shall be checked and tested to confirm proper operation and accuracy of the data.

8) Defects or problems found during the Commissioning effort or field test shall be corrected by the MSS and then re-tested to demonstrate proper operation.

b. Feed Flow / Pressure / Level Control System in Manual the Automatic Mode

c. Permeate Pressure Flow / Pressure / Level Control System in Manual the Automatic Mode

d. Backwash Flow / Pressure Level / Control System in Manual the Automatic Mode

e. Backwash Process Residuals Flow / Pressure Level / Control System in Manual the Automatic Mode

f. Filtration Units Placed into Service in Manual the Automatic Mode

g. Check Startup Sequence in Normal and Emergency Modes

h. Check Shut Down Sequence in Normal and Emergency Modes

i. Check Process Logic Interlocks.

j. Flush, Pressure Test and Disinfect Piping

k. Install Membrane Modules

l. Place Membrane System in Operation

1) Verify Filtration Sequence
2) Verify Backwash Sequence
3) Verify Other MSS Process Sequences m. Chemically Clean Membrane Units

A. CALIBRATION CERTIFICATES:

1. MSS shall furnish to the Owner/Engineer calibration reports for field instruments and devices specified and panel mounted devices when calibration is completed.

2. The calibration certificate forms shall be prepared and furnished by MSS.

3. Each calibration certificate shall be signed and dated by an authorized representative of MSS.

The MSS shall perform a Functional Acceptance Test (FAT). The combined software/hardware system is tested from this point forward with the membrane modules installed. The purpose of the test is to ensure that the PLC and Operator Graphics software configured is working in conjunction with the hardware and plant as specified. This test is accomplished with the system on-line under normal operating conditions. Application software problems encountered during the test will be investigated and corrected by the MSS. The MSS shall provide a qualified person familiar with the installation and panels, during the test.

As part of commissioning, the MSS shall confirm that the installed fine-screening equipment conforms to the requirements of the membrane warranty provisions. The Contractor will make available all approved submittal drawings of the fine-screening equipment to the MSS. The MSS shall witness the operation of the fine-screening equipment. The MSS shall document the conformance of the fine-screening in the Commissioning report.

Upon completion of the commissioning by the MSS, the Engineer will review the operation of the equipment to verify that the commissioning is complete for items identified in this Section. Upon satisfactory completion of the review, the Engineer will submit to the MSS a written “Notice of Completed Commissioning”. In the case that the review identifies some items that must be corrected, the Engineer will prepare a list detailing the outstanding issues and the party responsible for the correction.

Once the “Notice of Completed Commissioning” is issued, Training of Operation and Maintenance Personnel may commence.

3.04 TRAINING OF OPERATIONS AND MAINTENANCE PERSONNEL

A. DESCRIPTION OF WORK:

1. The MSS shall provide formal training of the Owner’s personnel. Training shall commence within 14 days after the “Notice of Completed Commissioning” is issued.

2. The schedule for training shall be as mutually agreed to by the Owner, Engineer, Contractor and MSS.

3. A minimum of ten (10) full 8 hour days of training shall be provided.

4. Upon successful completion of the Training required by this Section, the Engineer will issue a “Notice of Completed Training”.

5. The MSS shall maintain record of the individuals that have completed training and provide information required for the documentation of Professional Development Hours required for the Owner’s personnel.

6. The MSS shall provide the services of factory-trained specialists to train the Owner’s personnel in the recommended operation and the preventive maintenance procedures for MSS-furnished equipment provided by the Contract Documents. Training for the following items specifically require a factory specialist:

    a. Permeate Pumps
    b. Variable Frequency Drives
    c. Compressed Air Systems
    d. Packaged Blower Systems

7. The MSS shall provide a combination of classroom and hands-on training. All training shall be conducted at a location selected by the Owner.

8. Hands-On Training shall be limited to groups of 8. In the event that more than 8 personnel are to be trained, multiple hands-on training sessions shall be conducted.

9. The MSS shall be responsible for all costs associated with training and shall provide required materials, texts, and supplies. Training material shall be provided to the Owner in written and electronic format.

10. Training shall be conducted in normal eight (8) hour working days until conclusion of the training course.

11. Training sessions shall be video taped according to the requirements of section 1.03 of this specification.

12. Training shall be performed by the MSS and component equipment suppliers. The MSS shall be responsible for the training on the design and operation of the equipment and systems provided. This includes:

    a. Membrane System

        1) Membrane Theory
        2) Membrane System
        3) Membrane Units
        4) Membrane Processes

a) Start Up, Shut Down
b) Filtration, Backwashing or Reverse Filtration
c) Enhanced Flux Maintenance, Chemical Washing, Backpulse and Clean In Place
d) Integrity Testing and Module Repair

5) Routine and Non-Routine Maintenance

b. Component Equipment Training

1) Equipment (including pumps, compressors)
2) Valves, actuators, and positioners

c. Instrumentation and Control Component Equipment Training

1) Switches
2) Meters and Transmitters
3) Analyzers

d. Instrumentation and Control Programmable Logic Control/HMI Training

1) Programmable Logic Control Equipment
2) HMI System Training

B. “HANDS–ON DEMONSTRATION”:

The MSS’s instructor shall present "hands-on" demonstrations of operations and maintenance of the MSS supplied and component equipment. The proposed "hands-on" demonstrations should be described in the MSS’s proposed lesson plan.

C. TRAINING:

The instruction lesson plan shall include the following as a minimum:

1. Equipment Operation:

a. Describe equipment's operating (process) function

b. Describe equipment's fundamental operating principals and dynamics

c. Identify equipment's mechanical, electrical, and electronic components and features

d. Identify all support equipment associated with the operation of subject equipment (e.g., compressed air intake filters, valve actuators, motors)

e. Recommend standard operating procedures to address start-up, routine monitoring, and shut-down of the equipment

2. Detailed Component Description:

a. Identify and describe in detail each component's function

b. Group related components into subsystems, where applicable. Describe subsystem functions and their interaction with other subsystems

c. Identify and describe in detail equipment safeties and control interlocks

3. Equipment Preventive Maintenance (PM):

a. Describe PM inspection procedures required to:

1) Perform an inspection of the equipment in operation

2) Spot potential trouble symptoms and anticipate breakdowns

3) Forecast maintenance requirements (predictive maintenance)

b. Define the recommended PM intervals for each component

c. Provide lubricant and replacement part recommendations and limitations

d. Describe appropriate cleaning practices and recommend intervals

e. Identify and describe the use of special tools required for maintenance of the equipment

f. Describe component removal/installation and disassembly/ assembly procedures

g. Perform "hands-on" demonstrations of preventive maintenance procedures

h. Describe recommended measuring instruments and procedures, and provide instruction on interpreting alignment measurements, as appropriate

i. Define recommended torque, mounting, calibration, and/or alignment procedures and settings, as appropriate

j. Describe recommended procedures to check/test equipment following a corrective repair.

4. Equipment Troubleshooting:

a. Define recommended systematic troubleshooting procedures
b. Provide component specific troubleshooting checklists

Describe applicable equipment testing and diagnostic procedures to facilitate troubleshooting.

Upon completion of the Operator Training, the Engineer will issue a 'Notice of Completed Training.'

3.05 ACCEPTANCE TESTING

Each Membrane Unit will be tested concurrently but evaluated separately for performance.

The purpose of the Acceptance Testing is to demonstrate that MSS-furnished equipment is:

1. Properly installed

2. Ready to be placed into service by the Owner.

3. In compliance with the service conditions, performance requirements, material specifications, and all other requirements of the Contract Documents.

a. Tests shall be conducted to establish a clean water base line permeability chart for the membrane system. Measurements of TMP vs Flux at 25%, 50%, 75%, 100% and 125% at the maximum month design flux shall be taken 1 hour after cleaning. Water temperature at the time of data collection shall be documented.

The Contractor shall furnish all materials, instruments, and incidental and expendable equipment required for Acceptance Testing of the Equipment, except where otherwise specified.

The Owner or an authorized representative of the Owner will be present to witness the Acceptance Testing.

The MSS shall keep detailed notes regarding the Acceptance Testing and record all test data and results. This will be done through operation of the data logging system. Upon successful completion of the Acceptance Testing, the MSS shall submit a written report on the Acceptance Testing.

The initial Acceptance Testing period will consist of thirty (30) consecutive days with one or more Unit(s) operating at the design average permeate flow, with the other Units equally balanced to treat the remaining raw water available for the 30-day period. A representative of the MSS shall be present on site during normal working hours for five (5) days (8 hours per day) of the 30 day Acceptance Testing Period. A representative of the MSS shall be available via means of a pager or cellular communication during non-working hours in case of an emergency during the entire Acceptance Testing period. MSS shall complete Acceptance testing within (90) days of the date of Notice of Completed Commissioning.

After the Acceptance Testing is completed, the Engineer and Owner will to determine compliance with the Contract Documents. At that time, if it is determined that the MSS has fulfilled the requirements of the Contract Documents, the MSS will be released from its on-site obligation unless otherwise retained.

If the System does not perform in accordance with the Contract Documents, the MSS shall return or remain on site to perform all necessary corrections at the cost of the MSS until compliance with Contract Documents is demonstrated.

During the Acceptance Testing, the System shall perform in accordance with the guaranteed product water quality.

If the Acceptance Testing is interrupted at the request of the MSS or by the non-conformance of the MSS's equipment for more than three instances or a cumulative downtime of more than six (6) hours during the acceptance test, the Fulton County or Engineer may require that Acceptance Testing be restarted from the beginning, at no cost to the Owner.

Any interruption of the Acceptance Testing caused by circumstances beyond the control of the MSS shall not require the testing to be restarted from the beginning. Such events include any activities that would result in an inadvertent or unplanned shutdown of the PLC / HMI control System or otherwise interfere with the Reliability Acceptance Test. The elapsed time of Acceptance Testing prior to the interruption will be applied to the required testing period.

Successful completion of acceptance testing and receipt of the revised operations and maintenance manuals shall be required for acceptance of the equipment.

3.06 OPERATIONAL ASSISTANCE

1. Operation Assistance to the Contractor: The MSS shall provide Operations Assistance to the Contractor for the Membrane Filtration System Equipment.

    a. Up to two (2) weeks of Operational Assistance shall be provided to the Contractor. This Operational Assistance is required in addition to any specific requirements associated with Operator Training or Acceptance Testing.

    b. The MSS shall provide the Contractor with Operational Assistance for the membrane system during times after the "Notice of

Completed Commissioning" for the Membrane System has been issued but prior to the completion of Acceptance Testing.

c. Prior to the Notice of Substantial Completion, when requested by the Contractor, Operational Assistance shall be provided to the Owner's Personnel. Operational Assistance shall be provided for:

1) Training of the Operations and Maintenance Personnel.
2) Acceptance Testing.
3) Such times not specifically allocated as part of Training or Acceptance Testing.

2. Operation Assistance to Fulton County:

a. The MSS shall provide Operations Assistance to the Owner during the period of Acceptance Testing and Final Inspection.

1) Operations assistance shall consist of:
a) Two 16-hour General Operations Assistance visits.
b) MSS Services during the Final Inspection period.

b. General Operations Assistance shall consist of:

1) Review of Membrane Filtration Unit Operational Logs
2) Review and Modification of PLC/HMI Programming Software to address system performance issues
3) Review of component equipment operation
4) Assistance to the Owner's personnel during normal working hours
5) Answer Owner questions regarding performance of the Membrane System
6) Respond to Warranty notices or claims.

c. Final Inspection Site Visit.

The MSS shall attend and participate in the Final Inspection of the Membrane Equipment and respond to items identified by the MSS, Owner, Contractor or Engineer as being necessary to fulfill the requirements of the Contract Documents.

END OF SECTION

SECTION 11323

GRIT CLASSIFIERS AND APPURTENANCES

PART 1 – GENERAL

1.01 DESCRIPTION:

A. SCOPE:

This section specifies grit cyclones and classifiers for concentrating and dewatering grit slurries. Classifiers shall be of the helical screw spiral type consisting of helical screw with replaceable wearing shoes, spiral lifting device, and overflow weir. Cyclones shall be of the top overflow, bottom discharge type consisting of a cylindrical chamber with resistant liner. The system shall include all drives, motors, gear reducers, controls and appurtenances as indicated and specified herein to provide a complete and functional system.

The classifier shall receive flow from one of two cyclone concentrators mounted directly to the classifier unit. Cyclones shall receive grit slurry pumped from a vortex type grit system specified in Section 11148. Grit pumps (provided separately) shall be of the recessed impeller centrifugal type as specified in Section 11355. Each cyclone shall receive flow from a dedicated grit pump.

The manufacturer shall review the mechanical and structural layout drawings to familiarize themselves with the location and the set-up of the equipment specified and shall assure themselves that the equipment specified is appropriate for and coordinated with what is shown on the contract drawings. The manufacturer shall also review the relevant electrical plan and one-line diagram and the relevant process and instrumentation diagram drawing to ensure that the contract drawings are appropriate and coordinated with the equipment/controls specified. Specific attention shall be given to coordinating the configuration with of the proposed equipment with the proposed screenings dumpsters in order to provide the necessary clearances around the dumpster.

B. EQUIPMENT LIST

Item	Equipment No.
Grit Cyclone 1	SEP-2051-1
Grit Cyclone 2	SEP-2051-2
Grit Classifier	GC-2051

C. PERFORMANCE AND DESIGN REQUIREMENTS

The cyclones shall capture a minimum of 95 percent of all grit particles in the inlet slurry having a diameter equal to or greater than 50 microns and specific gravity of 2.65 or greater. Classifiers shall dewater the concentrated grit by conveying the material up an incline sloped to

a discharge nozzle that shall deposit the grit into an adjacent dumpster. Dewatering action shall be accomplished by drainage through the mass of material conveyed by a helical conveyor to the discharge chute. The slurry will be comprised of sand, sticks, gravel, petroleum products, industrial solvents, detergents and organic solids. Each classifier unit shall be designed to capture not less than 95 percent of all grit particles in the slurry having a diameter equal to or greater than that retained on a standard 150 mesh U.S. standard sieve and a specific gravity of 2.65 or greater.

Equipment furnished under this section shall conform to the following minimum requirements; however, the design and capacity of the equipment supplied shall be suitable for the expected grit loading from the vortex grit removal system specified in Section 11148. The Contractor shall cause the supplier for the equipment specified in this section to coordinate with the vortex grit system supplier (if different) to verify the cyclone/classifier loading criteria to be used herein.

Grit Cyclones/Concentrators	
Number of Units	2
Rated Capacity of Each Unit (gpm)	250
Inlet pressure, psig	6 to 9
Underflow rate, gpm	See Note 1
Inlet port size, inches	4
Overflow port size, inches	6
Grit Classifiers	
Number of Units	1
Rated Slurry Capacity of Each Unit (gpm)	See Note 2
Maximum motor horsepower	1
Minimum discharge solids concentration (%)	75
Capture rate of grit larger than 150 mesh	95% See Note 3
Specific Gravity of at least	2.65
Minimum Screw diameter, inches	9
Maximum screw speed, rpm	12
Acceptable range of linear rate of travel up the screw, ft/min	4 to 6

Notes:

1. Underflow rate for the cyclones shall be determined by the manufacturer but shall not be greater than 20 gpm.
2. Classifiers shall have a minimum capacity corresponding to no less than twice

the design underflow rate from the cyclones

3. If manufacturer cannot meet this requirement, they shall provide data showing what capture rate can be guaranteed at the flow rates listed above.

1.02 QUALITY ASSURANCE

A. REFERENCES:

This section contains references to the following documents. They are a part of this section as specified and modified. Where a referenced document contains references to other standards, those documents are included as references under this section as if referenced directly. In the event of conflict between the requirements of this section and those of the listed documents, the requirements of this section shall prevail.

Unless otherwise specified, references to documents shall mean the documents in effect at the time of Advertisement for Bids or Invitation to Bid (or on the effective date of the Agreement if there were no Bids). If referenced documents have been discontinued by the issuing organization, references to those documents shall mean the replacement documents issued or otherwise identified by that organization or, if there are no replacement documents, the last version of the document before it was discontinued. Where document dates are given in the following listing, references to those documents shall mean the specific document version associated with that date, regardless of whether the document has been superseded by a version with a later date, discontinued or replaced.

Reference	Title
AFBMA 9-90	Load Ratings and Fatigue Life for Ball Bearings.
AFBMA 11-90	Load Ratings and Fatigue Life for Roller Bearings.
ANSI B16.1	Cast Iron Pipe Flanges and Flanged Fittings, 125 lb.
ASTM A36	Structural Steel.
ASTM A48	Gray Iron Castings.
ASTM A322	Carbon and Alloy Steel Bars.
HI	Hydraulic Institute

C. UNIT RESPONSIBILITY:

The Contractor shall assign unit responsibility as specified in paragraph 11000-1.02 C to the grit classifier manufacturer for the equipment specified in this section. A certificate of unit responsibility shall be provided.

D. QUALITY ASSURANCE:

Manufacturers of grit equipment specified herein shall have at least five operating installations with units of the size specified and in the same service as specified operating successfully for not less than five years. All welding for equipment specified herein shall be performed in accordance with American Welding Society Code D1.1. or equivalent.

E. FACTORY TESTING:

The complete system including cyclones and classifier shall be factory assembled and tested before shipping to the project site.

F. SHIPMENT, PROTECTION, AND STORAGE:

Equipment shipment, protection, and storage shall conform to the manufacturer's written requirements and Section 01605.

1.03 SUBMITTALS

The following information shall be provided in accordance with Section 01300:

1. A copy of this specification section, with addendum updates included, and all referenced and applicable sections, with addendum updates included, with each paragraph check-marked to indicate specification compliance or marked to indicate requested deviations from specification requirements. Check marks (✓) shall denote full compliance with a paragraph as a whole. If deviations from the specifications are indicated, and therefore requested by the Contractor, each deviation shall be underlined and denoted by a number in the margin to the right of the identified paragraph, referenced to a detailed written explanation of the reasons for requesting the deviation. The Engineer shall be the final authority for determining acceptability of requested deviations. The remaining portions of the paragraph not underlined will signify compliance on the part of the Contractor with the specifications. *Failure to include a copy of the marked-up specification sections, along with justification(s) for any requested deviations to the specification requirements, with the submittal shall be sufficient cause for rejection of the entire submittal with no further consideration.*

2. A copy of the contract document control diagrams and process and instrumentation diagrams relating to the submitted equipment, with addendum updates that apply to the equipment in this section, marked to show specific changes necessary for the equipment proposed in the submittal. If no changes are required, the drawing or drawings shall be marked *"no changes required"*. *Failure to include copies of the relevant drawings with the submittal shall be cause for rejection of the entire submittal with no further review.*

3. Certificate of Unit Responsibility attesting that the Contractor has

assigned, and that the manufacturer accepts, unit responsibility in accordance with the requirements of this Section and paragraph 11000-1.02 C. *No other submittal material will be reviewed until the certificate has been received and found to be in conformance with these requirements.*

4. Manufacturer's catalog data confirming capacity, overflow rate, horsepower, and electrical requirements for classifier; confirming capacity and removal efficiency for cyclones.

5. Dimensional drawings including location of all piping, electrical, instrumentation, water supply, and structural connections. Drawings shall specifically include the proposed screening dumpster and associated clearances to confirm coordination. Drawings shall also show clearances from adjacent walls and other structural elements to confirm clearances for maintenance requirements and general access.

6. Parts list with materials of construction.

7. Motor data submittal in accordance with Section 11060.

8. Detailed installation drawings, showing the size and location of all piping, electrical, instrumentation, and structural connections.

1.04 ENVIRONMENTAL CONDITIONS

Equipment shall be installed indoors in the proposed treatment building at a wastewater treatment plant that is approximately 890 feet above sea level. Refer to Section 01800 for additional environmental conditions. The classifier and associated cyclones shall be installed in a Class 1 Division 2 environment. All equipment provided under this specification shall be rated for continuous operation in this environment.

PART 2--PRODUCTS

2.01 ACCEPTABLE PRODUCTS

The Owner and Engineer believe the following candidate manufacturers are capable of producing equipment and/or products that will satisfy the requirements of this section. This statement, however, shall not be construed as an endorsement of a particular manufacturer’s products, nor shall it be construed that named manufacturers’ standard equipment or products will comply with the requirements of this section. Candidate manufacturers include Jones and Atwood, John Meunier, Smith and Loveless, or approved equal, modified to meet specified requirements.

2.02 GRIT CYCLONE/CONCENTRATOR:

Cyclones shall be vortex-type grit concentrators of carbon or stainless steel construction. Each cyclone shall have a long sweep involuted feed inlet designed to minimize turbulence within

the cyclone and minimize wear along the feed inlet. All mounting hardware shall be stainless steel. The inlet and overflow for each cyclone shall be provided with fittings suitable for use with the adjacent piping systems as specified in Section 15050. The inlet shall be provided with a 0 to 25-psig pressure gage complete with a sealed diaphragm. All interior surfaces in contact with high velocity water shall be fully lined with natural rubber or urethane. The liners shall be easily replaceable.

The vortex finder shall be cast from Ni-Hard or similar metal with a minimum Brinell hardness of 500 and shall be easily replaceable. The apex housing shall be of the fixed type. Quick disconnecting devices shall be provided to allow the removal of the apex assembly without disconnecting any other piping.

2.03 GRIT CLASSIFIER:

A. SETTLING TANK:

The settling tank shall be a fabricated steel tank of not less than 1/4-inch stainless steel plate. The tank shall be flared to develop the necessary surface area and protected settling area to accommodate the maximum anticipated flow rate. It shall be suitably reinforced and mounted on steel frames/legs. Support legs shall include base plates with holes for anchoring into foundation. The entire unit shall be self-supporting for positioning on a concrete slab or pad. The entire settling tank shall be covered by stainless steel plate with bolted-on access hatch. The weir overflow shall discharge into a launder box equipped with a flanged pipe connection of appropriate size for drainage. A drain pipe connection of appropriate size shall also be provided at the low end of the settling tank for maintenance.

B. SCREW:

The grit shall be removed from the bottom of the settling compartment and conveyed up the dewatering beach by means of a shafted helical conveyor. The helix shall be made from abrasion resistant steel flights of 0.25 in (minimum) thick plates. These flights shall be welded onto a shaft of appropriate diameter. There shall be sufficient clearance between the screw and the tank so that a buildup of grit will provide a bed for the screw to prevent tank wear. The pipe shaft of the screw shall be designed with a maximum stress of 3000 psi, and a fatigue life, at 98 percent reliability, of 20 years minimum.

C. CYCLONE INLET HOUSING:

Cyclones shall be supported directly from the top of the classifier settling tank structure and connected to the settling tank by fabricated stainless steel housing. The housing shall fully enclose the cyclone discharge and configured to transition the flow into the settling tank below.

D. DRIVE ASSEMBLY:

The shaft mounted drive assembly shall be mounted to a framework on the upper end of the inclined trough and keyed to the drive shaft extension. The drive assembly shall contain case-hardened gearing of AGMA Class 12 finish in a rugged, corrosion-proof housing. Double lip seals shall be provided on both input and output shafts, together with additional gasketing to prevent oil leakage.

E. LOWER BEARING ASSEMBLY:

The lower end of the screw shall be supported by a bearing specifically designed for long life in a highly abrasive application. The bearing shall be provided with a permanent seal to prevent leakage of oil and infiltration of grit and other foreign particles into the housing. The bearing shall be designed to accept the maximum thrust loads due to operation of the classifier. The housing shall be provided with stainless steel cap screws and fill and drain plugs.

The lower bearing shall be positively grease-lubricated. Grease may be supplied by spring-loaded cups or injected by pump. Where provided, pumped injection systems shall consist of an electrically driven automatic grease lubricator system to inject grease during the operation cycle. The unit will supply grease to the bearing assembly and will include a supply reservoir.

F. MOTORS:

Electric motors shall be Type III explosion proof motors as specified in Section 11060. Motors shall be maximum 1 HP, 1,800 RPM, 460V, 3 ph, 60 Hz. Motor capacity shall be sufficient to operate equipment at maximum speed indicated without exceeding nameplate ratings for current and power and without operating in the motor service factor. Motors associated with the grease lubrication system, where required, shall be wired to start with the main screw classifier drive.

2.03 ELECTRICAL EQUIPMENT AND CONTROLS

A. GENERAL:

All electrical components shall be suitable for a Class I Division 2 environment as defined by NFPA. Junction boxes, limit switches, and other electrical devices shall be provided with NEMA 7 enclosures and located according to NFPA requirements. Manufacturer shall provide a control panel as described by Specification Section 17900 and as specified by Section 16176.

B. ELECTRICAL DEVICES:

Each classifier shall be supplied with the following devices. Other additional devices may be provided as recommended by the manufacturer.

1. SPEED SENSOR: A non-contact type speed sensor shall be provided for each grit classifier. Sensor shall alarm and shut down the equipment upon slow down or failure. The speed sensor shall be mounted in a position to monitor the motion of the screw.

2. EMERGENCY STOP: An emergency stop shall be provided for each grit classifier.

C. CONTROL CONSIDERATIONS:

Electrical components and wiring shall be provided and installed in accordance with the National Electric Code (NEC) and additional requirements by the State of Georgia as necessary.

Note that the cyclone and classifier equipment in this Section will be installed in a Class I, Division 2, Group D, hazardous, corrosive, and wet area. See Specification Section 17900 for Operational Description of VCP-2050.

D. REFERENCE CONTROL DRAWINGS

Provide controls as shown on the following control drawing and as specified in this Section.

20-I-605 Grit Classifier

2.05 SPARE PARTS

The following spare parts shall be provided. Spare parts shall be tagged and stored as specified in paragraph 11000-2.12.

1. Two year supply of all lubrication oils and fluids
2. Set of all special tools required to perform routine maintenance

2.06 PRODUCT DATA

The following information shall be provided in accordance with Section 01300:

1. Applicable operation and maintenance information specified in Section 01730.
2. Manufacturer's Installation Certification Form 11000-A as specified in Part 3.
3. Manufacturer's Instruction Certification Form 11000-B as specified in Part 3.

PART 3--EXECUTION

3.01 INSTALLATION

Contractor shall provide for on-site start-up service by a qualified factory-trained equipment manufacturer's representative. As a condition precedent to the final acceptance of the work, the manufacturer's representative shall demonstrate to the Engineer that the equipment has been properly installed, aligned and tested and meets all requirements for satisfactory performance under the conditions specified herein. Installation and trial operation shall be certified on Form 11000-A as specified in Section 01999.

3.02 TESTING

Testing and commissioning shall be performed in accordance with Section 01660 and 01662. Following completion of the CONTRACTOR pressure and leakage tests, electrical testing, and

ring-out of circuits, the vendor shall provide an authorized manufacturer's representative to perform a pre-operational checkout of instrumentation and equipment furnished under this contract. Pre-operational checkout procedures include those required prior to operation. Pre-operational checkout prior to operation of equipment shall include the following:

1. Verification of equipment alignment.

2. Pre-operation lubrication.

3. Verification that all external system protective functions are functional and have been tested.

4. Verification that all internal protective functions are operational.

5. Manufacturer's recommendations for pre-start preparation and pre-operational checkout procedures.

6. Manufacturer shall perform testing to demonstrate performance as specified in paragraph 11323-1.01 C. At a minimum the demonstration shall include the following:

   Grit units shall be capable of accepting pumped design flow, 250gpm.
   Grit units shall produce dry grit with less than 10% moisture content.
   Grit units shall produce dry grit with organic content 5% or less.
   Grit units shall produce a material having no visible fecal matter (less than or equal to 5%) and be absent of putrescent odor.

3.03 TRAINING

The manufacturer shall provide one 4-hour training session for plant personnel covering operation and maintenance, common problems and safety. The manufacturer shall provide a completed Instruction Certification Form 11000-B as specified in Section 01999.

** END OF SECTION **

SECTION 11347

SUBMERSIBLE WASTEWATER PUMPS FOR VARIABLE SPEED APPLICATIONS

PART 1—GENERAL

This section specifies pumps and associated accessories for municipal wastewater pumping applications. Equipment furnished under this specification shall have discharge nozzles 4 inches in diameter and larger and shall have motors 7.5 horsepower and larger. Pumps and appurtenances furnished under this section shall be specifically selected for operation at variable speed. In accordance with the requirements of Section 11050, the Contractor shall submit documentation verifying that the proposed pumps will be suitable for the specific variable speed application described in this Section. The requirements of Section 11050 shall only apply where specifically noted herein.

The manufacturer shall review the mechanical and structural layout drawings to familiarize themselves with the location and set-up of the equipment specified and shall assure themselves that the equipment specified is appropriate for and coordinated with what is shown on the contract drawings. The manufacturer shall also review the relevant electrical plan and one-line diagram and the relevant process and instrumentation diagram drawing to ensure that the contract drawings are appropriate and coordinated with the equipment and controls specified.

1.01 DESCRIPTION

A. SCOPE:

This section specifies submersible pumps for variable speed (infinitely variable speed) wastewater pumping complete with motor, discharge fitting, guide bar brackets, access frames, covers and accessories suitable for pumping unscreened wastewater at infinitely variable speed. Variable speed drive equipment shall be provided separately by the Contractor. Refer to Paragraph 11347-2.03 I for coordination requirement.

Manufacturers proposing to furnish equipment specified under this section shall hold current certification under ISO 9001-2001. Application for certification under ISO 9001 shall not be deemed as an acceptable substitute for current certification. Documentation attesting to current certification shall be signed by an officer of the manufacturer's corporation and shall be notarized.

B. TYPE:

The pump shall be of the heavy-duty, submersible, vertical shaft, centrifugal non-clog type, suitable for pumping fluids containing unscreened wastewater solids. The pump shall be designed for continuous or cyclic operation under submerged, partially submerged or totally dry condition without damage to the pump and motor. Special attention shall be devoted to the shaft design to limit deflection under all operating conditions, as specified in this section.

C. EQUIPMENT LIST:

Item	Equipment Number
Raw Sewage Influent Pump 1	P-2021
Raw Sewage Influent Pump 2	P-2022
Raw Sewage Influent Pump 3	P-2023
Raw Sewage Influent Pump 4	P-2024
Raw Sewage Influent Pump 5	** Shelf Spare **
Membrane Feed Pump 1	P-4021
Membrane Feed Pump 2	P-4022
Membrane Feed Pump 3	P-4023
Membrane Feed Pump 4	P-4024
Membrane Feed Pump 5	** Shelf Spare **
Internal Mixed Liquor Recycle Pump 1	P-3015
Internal Mixed Liquor Recycle Pump 2	P-3025
Internal Mixed Liquor Recycle Pump 3	** Shelf Spare **

** A spare pump unit shall be provided matching the performance requirements for P-2021 & P-2022

D. PUMPED FLUID AND OPERATING CONDITIONS:

The fluid to be pumped is unscreened raw municipal sewage (from domestic, commercial and industrial sources). The temperature is anticipated to range between 55 degrees F and 85 degrees F and contain up to 1,000 mg/l of solids consisting of ground rags, grit and organic material with small quantities of petroleum products and animal fats and greases.

The fluid to be pumped will be unscreened municipal wastewater. The temperature is anticipated to range between 55 degrees F and 85 degrees F and contain up to 1,000 mg/l of solids consisting of grit and organic material with small quantities of petroleum products and animal fats and greases. The pumped material will have a tendency to form long fibrous strings due to the rotation of the water through piping passageways.

The pump will be operated by a control system that will start and stop the pump at constant or variable speed in accordance with the following process control criteria:

1. The pumps will be operated by a control system that will start the pumps against a closed, spring loaded swing check valve.

2. The pumps will operate at variable speed using variable frequency drives as specified in Section 11069 for individually mounted VFDs and as specified in Section 16920 for MCC mounted VFDs.

3. The pumps will respond to a control system that will adjust pump speed to approximately match the pumping rate to the rate of inflow into the wetwell while maintaining a wetwell level that approximately mimics normal flow depth in the upstream influent channel.

4. Accordingly, the normal wetwell operating level in the wetwell will vary as shown on the Drawings and there will be no cascade into the wetwell.

As indicated on the Drawings, the pumps will be installed in a reinforced trench-type wetwell. In either application, the pumps will be operated at variable speed, responding to a control system that will cycle the pumps in accordance with the specified program and will be used periodically to remove trapped floating and settleable solids by operating the pump to draw down the wetwell to break suction. Pumps furnished under this section shall be certified and guaranteed for a period of not less than 5 years to be maintenance free by the manufacturer.

E. PERFORMANCE REQUIREMENTS:

The performance requirements presented in tabular form below are intended to describe the results of hydraulic calculations developed using a mathematical modeling program specifically developed for the purpose. The model was intentionally used to develop the limits of expected extremes in variation of static head, coefficients for pipeline resistance and turbulence losses through fittings and valves. Equipment furnished under this section shall be fully suitable for continuous operation at any specified condition or any condition lying between the extremes of the operating conditions specified in the following table. The notes presented at the end of the table are intended to be complimentary to the information presented in the table.

Operating condition	P-2021, P-2022, Spare	P-2023, P-2024	P-4021, P-4022, P-4023, P-4024 Spare	P-3015, P-3025, Spare
Full Speed Operation				
Condition A[1, 5]				
Capacity, gpm	560	1,750	3,550	2,600
Total head, feet	52	52	44	16
Static Head, feet	39	39	27	7
NPSHA, feet				35
Condition B[2, 5]				
Capacity, gpm	*from pump H/Q curve*	*from pump H/Q curve*	*from pump H/Q curve*	*from pump H/Q curve*
Total head, feet	45	46	33	13
Static Head, feet	39	39	25	6
NPSHA, feet				36

Operating condition	P-2021, P-2022, Spare	P-2023, P-2024	P-4021, P-4022, P-4023, P-4024 Spare	P-3015, P-3025, Spare
Reduced Speed Operation				
Condition C[3, 5]				
Capacity, gpm	250	1,050	2,000	1,550
Total head, feet	40	41	25	10
Static Head, feet				7
Pump speed	Reduced	Reduced	Reduced	Reduced
NPSHA, feet				35
Condition D[4, 5]				
Capacity, gpm	0	0	0	0
Total head, feet	39	39	25	6
Pump speed	Reduced	Reduced	Reduced	Reduced

NOTES:

1. Condition A shall be taken as the rated operating condition. Performance at the rated condition shall be guaranteed in accordance with Section 11050. Condition A has been selected to obtain the rated pumping capacity for the installation. It is not intended that the pumps be selected for maximum efficiency at Condition A. Pumps furnished under this section should be selected to achieve Condition A performance, but also operate continuously without objectionable vibration or cavitation at the head specified under Condition B. Condition A may be located in the Allowable Operating Region as established by the pump manufacturer in accordance with ANSI/HI 9.6.3 and published in the manufacturer's published application data for the specific model proposed for this application. . However, if Condition A is located in the AOR, the limiting suction specific speed for the pump selection will change (refer to paragraph 11347-1.01 F.

2. Condition B head is presented to indicate operating conditions when the pump is operating against minimum anticipated system head, assuming a hypothetical head-capacity curve. **Condition B shall be used for pump selection**. **Condition B shall be located within the Preferred Operating Region as established by the pump manufacturer in accordance with ANSI/HI 9.6.3 and listed in the manufacturer's published application data for the specific model proposed for this application. Proposals requesting compliance with Condition B requirements at reduced speed are not acceptable. All such proposals will be rejected.** NPSHA, as listed for Condition B is calculated based upon the following assumed pump centerline elevations:

Equipment No.	Reference elevations used for NPSHA calculation for Condition B
P-2021, P-2022	863.50 ft
P-2023, P-2024	863.00 ft
P-4021, P-4022, P-4023, P-4024	873.00 ft
P-3015, P-3025	886.80 ft

Pumps with head-capacity curves steeper than that assumed will produce somewhat less flow at somewhat lower head. The reverse will occur with pumps having a shallower head-capacity curve.

3. Condition C is the anticipated continuous duty maximum head condition when operating at reduced variable speed. Pumps furnished under this specification shall be capable of sustained (24 hours per day) operation at this condition within the requirements set forth in Section 11050. Condition C shall be no less than 60% of the best efficiency flow rate for the proposed pump on the reduced speed curve. It is preferred, however, that the Condition lie within the Preferred Operating Region in accordance with ANSI/HI 9.6.3 and published in the manufacturer's published application data for the specific model proposed for this application.

4. Condition D is the anticipated continuous duty minimum head condition when operating at reduced variable speed. Pumps furnished under this specification shall be capable of sustained (24 hours per day) operation at this condition within the requirements set forth in Section 11050. Condition D shall be located within the Acceptable Operating Region as established by the pump manufacturer in accordance with ANSI/HI 9.6.3 and published in the manufacturer's published application data for the specific model proposed for this application.

5. Total head in the above tabulation is the algebraic difference between the discharge head and suction head as defined in ANSI/HI 1.1 – 1.6. Net positive suction head available (NPSHA) in the above tabulation is referred to the wetwell invert as shown and is calculated in accordance with ANSI/HI 1.3 for average barometric pressure and maximum temperature conditions. An allowance of three feet has been included for the presence of volatile constituents in the pumped fluid. NPSHA at the pump impeller eye can be determined by adjusting the given value by proposed pump dimensions and the indicated requirements for pump installation details. ***It is the Contractor's responsibility to make this adjustment and produce calculations justifying the proposed selection.*** Required NPSHA margin shall be as specified in Section 11050.

F. DESIGN REQUIREMENTS:

Equipment provided under this section shall conform to the following:

Item	P-2021, P-2022	P-2023, P-2024	P-4021, P-4022, P-4023, P-4024	P-3015 P-3025
Pump				
Solid, inches diameter (minimum), capable of passing through the pump from inlet to discharge[1]	3	3	3	3
Maximum efficiency, minimum, percent[2]	77	68	65	70
Piping connection size, inches, minimum:				
Suction inlet nozzle bell diameter[3] (See Paragraph 2.03 M)	15	9	24	
Discharge	8	4	12	
Operating speed, rpm, maximum	1,200	1,800	1,200	
Suction specific speed, dimensionless, maximum[4]	8,000	8,000	8,500	
Motor				
Horsepower, maximum	40	20	70	20
Motor voltage	480	480	480	480

NOTES:

1. For pumps 10 inches in discharge nozzle diameter and less, this dimension shall be the minimum clearance between the outside diameter of the impeller and the volute cutwater. The sphere shall be a solid sphere, incapable of compression or distortion of any kind.

2. Efficiency is the minimum acceptable value at the maximum efficiency point on the pump's efficiency/capacity curve for the selected impeller, and is not necessarily to be associated with any specified operating condition. The efficiency stated shall include losses from the inlet through the pump to the discharge fitting. Any additional losses associated with the cooling water system shall also be included.

3. The inlet velocity shall not exceed 4 feet per second at Condition Point B as specified in paragraph 11347-1.01 E. A suction nozzle, fitted with a flared inlet, will be required to reduce the suction velocity to 4.0 feet per second or less, and the nozzle length must exceed the difference between the inlet and outlet diameter of the nozzle.

4. The suction specific speed limitation listed applies only to pump selections where both Operating Conditions A and B reside within the proposed pump selection's POR. Proposed selections with Operating Condition A residing in the AOR shall be limited to designs with suction specific speed less than 8500. Suction specific speed shall be calculated for the maximum pump design speed and impeller diameter, using the capacity in gallons per minute and NPSH3 at Best Efficiency in accordance with the procedures set for in the standards of the Hydraulic Institute.

Except as specifically referenced in this section, Section 11050 provisions will not apply to equipment furnished under this section.

Equipment furnished under this section shall be specifically certified by the manufacturer as suitable for operation in trench type or confined inlet wetwells where the wetwell will be cleaned using the pumping equipment. Pump anchorage systems, including the discharge piping, shall be restrained against the short-term buffeting caused by the cleaning process, where velocities in the wetwell trench or inlet well are expected to reach 15 ft/sec, with the liquid level at or below the top of the motor housing. The design of the anchorage system shall be the responsibility of the pump manufacturer and shall be the product of a structural engineer licensed to practice in the State of Georgia.

Pump anchorage systems shall be designed to restrain the unbalanced hydraulic thrust developed by the pump at the specified speed and during the starting and stopping conditions. In applications within known seismic zones, the pump anchorage provisions shall be designed in accordance with the local building code requirements. The analysis for the anchorage system in known seismic zones shall include the affect of differential loads imposed by water in the wetwell moving in response to the design seismic event.

G. VIBRATION AND CRITICAL SPEEDS:

The pump, when operating within the manufacturer's listed POR, as specified in Section 11050, with wetwell levels as indicated for normal (not cleaning) operation, shall comply with the requirements of ISO 10816, Zone B. Vibration at any specified operating condition that is located outside the manufacturer's listed POR shall not exceed 125 percent of the limiting values in ISO 10816, Zone B. Vibration levels shall be subject to field verification as specified in paragraph 11347-3.02.

1.02 QUALITY ASSURANCE

A. REFERENCES:

References shall be as set forth in Section 11050. In addition, this section (Section 11347) contains references to the following documents. They are a part of this section and any referencing section as specified and modified. Where a referenced document contains references to other standards, those documents are included as references under this section as if referenced directly. In the event of conflict between the requirements of this section or any referencing section and those of the listed documents, the following order of precedence shall prevail (listed in the order of primacy):

1. This section
2. Section 11050
3. The referencing section.
4. The referenced document.

Unless otherwise specified, references to documents shall mean the documents in effect at the time of Advertisement for Bids or Invitation to Bid (or on the effective date of the Agreement if there were no Bids). If referenced documents have been discontinued by the issuing organization, references to those documents shall mean the replacement documents issued or otherwise identified by that organization or, if there are no replacement documents, the last version of the document before it was discontinued. Where document dates are given in the following listing, references to those documents shall mean the specific document version associated with that date, regardless of whether the document has been superseded by a version with a later date, discontinued or replaced.

Reference	Title
ISO 9001-2001	Quality Systems
ISO 10816	Machine Vibration – Evaluation of machine vibration by measurements on non-rotating parts
NEMA MG 1	Motors and Generators
UL 674	Motors and Generators, Electric, for Use in Hazardous Locations, Class I, Groups C and D, Class II, Groups E, F, and G.
UL 1207	Sewage Pumps for Use in Hazardous (Classified) Locations

B. PERFORMANCE CONFIRMATION:

The pump shall be subject to a non-witnessed factory test in accordance with the requirements of Section 11050. The test procedure shall follow the requirements of ANSI/HI 14.6, acceptance grade 1E. All other tests shall conform to the requirements set forth in ANSI/HI 11.6 and the requirements set forth in this section. Failure to achieve guaranteed performance or performance proposed in accepted submittal documents, whichever is the more restrictive (capacity and head, efficiency or NPSH3) shall be cause for rejection. Any deviations from specified limiting values shall be subject to review by the Engineer. In addition, the following procedures shall be followed:

1. Impeller, motor rating and electrical connections shall first be checked for compliance with the specifications.

2. Prior to submergence, the pump shall be run dry to establish correct rotation and mechanical integrity.

3. The pump shall be run for 30 minutes submerged, with a minimum of 6 feet of water over the top of the motor. Following this warm-up period, the pump shall be subjected to the performance and NPSHR tests specified in Section 11050.

4. After satisfactory completion of the performance and NPSHR tests, the motor shall be subjected to a housing leakage test performed under vacuum in accordance with paragraph 11.6.7.2.2 of ANSI/HI 11.6.

5. All motor circuits, including thermal and moisture sensors and the moisture sensors in the shaft seal area shall be subjected to electrical resistance tests to determine functionality.

A written report stating the tests have successfully been completed along with the results of the tests required under Section 11050 shall be provided, certified in accordance with Section 11050, as product data.

1.03 SUBMITTALS

In addition to the requirements of this section, submittals shall conform to the requirements of the following:

Section 11000: GENERAL REQUIREMENTS FOR EQUIPMENT

Section 11050: GENERAL REQUIREMENTS FOR CENTRIFUGAL AND AXIAL FLOW PUMPING EQUIPMENT

and shall include the following:

1. Proof of service of previously installed units of similar size and configuration in wetwells of the type described in paragraph 11347-1.01 D.
2. Shaft deflection calculations
3. Anchorage calculations and required documentation
4. Cooling system calculations
5. Field vibration test protocol as specified in Part 3 – Execution
6. Field discharge connection leakage test, as specified in Part 3 – Execution.

PART 2--PRODUCTS

2.01 ACCEPTABLE PRODUCTS

The Owner and Engineer believe the following manufacturers are capable of producing equipment and products, which will satisfy the requirements of this Section. This statement, however, shall not be construed as an endorsement of a particular manufacturer's product, nor shall it be construed that a named manufacturer's standard product will comply with the requirements of this Section. Candidate manufacturers include Xylem, Fairbanks Morse, ABS, or manufacturers with equivalent products capable of meeting the specified performance and producing a product for this application which will comply with the specified features.

2.02 MATERIALS

Material employed for the construction of equipment provided under this specification shall be as follows:

Component	Material
Pump and motor casing	Cast iron, ASTM A48, Class 30
Discharge elbow	Cast iron, ASTM A48, Class 30
Inlet nozzle and bell	Cast iron, ASTM A48, Class 30 or forged steel
Impeller	Cast iron, ASTM A48, Class 30
Motor and pump shaft	Stainless steel, ASTM A276 Type 329, 403, 420 or 416
Wearing rings,	Stainless steel, ASTM A276 Series 440B
External bolts and nuts	Stainless steel, ASTM A276 Type 316
Guide bar brackets	Stainless steel, ASTM A276 Type 316
Anchor bolts	Stainless steel, ASTM A276 Type 316
Guide rails, lifting assemblies	Stainless steel, ASTM A276 Type 316

Materials specified are considered the minimum acceptable for the purposes of durability, strength, and resistance to erosion and corrosion. The Contractor may propose alternative materials for the purpose of providing greater strength or to meet required stress limitations. However, alternative materials must provide at least the same qualities as those specified for the purpose. If alternatives are proposed, the proposals shall be accompanied with documentation supporting the claimed superiority of the proposed substitutions.

2.03 EQUIPMENT FEATURES

A. GENERAL:

The motor and rotating parts shall be removable from the motor end of the pump. All motor mating surfaces where watertight sealing is required shall be machined and fitted with nitrile O-rings. The pump shall be fitted with a dynamically balanced non-clog impeller designed to pass coarse solids and stringy materials. The pump shall be listed by Factory Mutual or Underwriters Laboratory as conforming in all respects to the requirements in UL 1207.

B. CASING:

The volute casing shall be a one-piece casting with a tangential or center discharge nozzle. The volute shall be designed for efficient conversion of kinetic to potential energy and shall have clear passageways designed to pass the solid sphere specified under paragraph 11347-1.01 F. The solids passing capability of the furnished equipment will be subjected to a field test in accordance with paragraph 11347- 3.02 B.

The cutwater shall be specifically designed for use in fluids with stringy solids and rags. The volute casting shall be specifically designed to bear the loads associated with removal and placement of the pump when submerged or exposed and to withstand the loads imposed by the operations specified under paragraphs 11347-1.01 E and 11347-1.01 F. The discharge nozzle shall be not less than the diameter specified under paragraph 11347-1.01 F. and shall be reinforced for the loads imposed by the specified conditions of service. The nozzle flange face shall be designed to mate with the discharge fitting specified in paragraph 11347-2.03 L. The volute casing shall be drilled and tapped or otherwise fitted with an inlet nozzle conforming to the requirements specified in paragraph 11347-2.03 K.

C. SHAFT:

The pump shaft shall be turned, ground and polished, of proportions suitable for use in the specified application. The shaft shall be of sufficient section to limit deflection at the shaft seal to not more than 1.5 mils when the pump is operating at any continuous-duty point defined by the envelope of conditions specified under paragraph 11347-1.01 E. The method for calculating shaft deflection shall be as established in Section 11050. Additionally, under no circumstances shall the distance from the lower bearing and the hub of the impeller exceed two times the diameter of the shaft. The documentation required under Section 11050 shall be included as a submittal along with all other documentation required by paragraph 11347-1.03.

D. BEARINGS:

Bearings shall be heavy-duty, oil lubricated or permanently greased lubricated anti-friction type double shielded and factory sealed. Bearings shall be designed for an L-10 rating life of at least 50,000 hours at any operating condition specified under paragraph 11347-1.01 E. Loads for radial bearing calculations shall be calculated in accordance with paragraph 11347-2.03 C.

E. IMPELLER:

The impeller shall be dynamically balanced after trimming to the diameter required by the specified operating conditions, and have a non-clog design capable of passing solids, fibrous materials, heavy sludge, and other matter found in wastewater applications through to the discharge nozzle. Impellers for pumps with discharges 8 inches in diameter and greater shall be not less than two-vane design. Fit between the impeller and the shaft shall be a sliding fit with a taper-lock bushing pressed by a screw, which is threaded into the end of the shaft, or a slip fit onto the shaft and drive key and fastened to the shaft by an impeller nut having cover for protection from pumped fluid. A wearing ring system designed for abrasion resistance shall provide efficient sealing between the volute and impeller.

F. MECHANICAL SEALS:

The pump shall be provided with a tandem double mechanical seal running in an oil reservoir, composed of two separate lapped face seals. The lower seal unit, between the pump and oil chamber, shall consist of one stationary and one positively driven, rotating tungsten-carbide or ring, with each pair of rings held in contact by a separate spring. The upper seal unit, between the oil sump and the motor housing, shall consist of one stationary tungsten-carbide or silicon-carbide ring and one positively driven silicon-carbide or rotating carbon ring. Ceramic

seals will not be acceptable. The seals shall require neither maintenance nor adjustment and shall be easily replaceable. Conventional double mechanical seals with a single or a double spring between the rotating faces, or that require constant differential pressure to effect sealing and are subject to opening and penetration by pumping forces, will not be acceptable. The pump shall be capable of continuous submergence without loss of watertight integrity to a depth of 65 feet.

Each pump shall be provided with a seal lubricant chamber for the shaft sealing system. The seal lubricant chamber shall be designed to assure that an air pocket is provided in the seal lubricant chamber, to absorb the expansion of the seal lubricant due to temperature variations. The drain and inspection plug with positive anti-leak seal shall be easily accessible from the outside.

G. MOTOR:

The pump motor shall be a squirrel-cage induction, shell type design, housed in an air-filled or an oil-filled, watertight chamber, NEMA B type Inverter Duty as specified in Section 11060 with a service factor of 1.15 based upon nameplate rating. The manufacturer shall furnish an unqualified warranty guaranteeing (full replacement at no cost to the Owner) the performance of the motors furnished under this project for a period of five years when operating under the specified conditions. The stator winding and stator leads shall be insulated with moisture resistant Class H insulation, which shall be rated at a temperature of 155 degrees C. The motor shall be designed for continuous duty, capable of sustaining a minimum of 12 starts per hour. The temperature rise of the motor shall not be in excess of that specified in NEMA MG-1 for class B insulating materials when operating continuously under load. Motors shall be Factory Mutual or UL listed in accordance with UL 674 and 1207 for Class I, Group D hazardous atmospheres. The junction chamber, containing the terminal board, shall be hermetically sealed from the motor. Connection between the cable conductors and stator leads shall be made with threaded compressed type binding post permanently affixed to a terminal board. The submersible electrical cable shall be of sufficient length to reach the junction box indicated.

The cooling system may be of the oil filled or air filled motor housing type. Thermal sensors shall be provided to monitor stator temperatures. The stator shall be equipped with three thermal sensors, embedded in the end coils of the stator winding (one sensor in each stator phase). These shall be used in conjunction with external motor overload protection and wired to the control panel. The design shall be suitable for continuous motor operation at listed motor rating in 95 degree F water.

The cooling system may rely on radiation of excess heat energy to the fluid in the wetwell or, alternatively, the pumped fluid via a closed circuit circulating system utilizing either oil or glycol, or a combination of these. It is specifically required that the cooling system must be compatible with the contemplated control schedule, which may require that the motor case to be exposed continuously or intermittently. Cooling systems shall not employ the pumped fluid to directly cool the motor through wastewater passageways incorporated into the motor shell. It is preferred that the motor be cooled by the wastewater via fins incorporated into the motor shell. If an internal liquid circulation system is employed for cooling purposes, the liquid shall be glycol or heat transfer oil, which shall in turn circulate a heat exchanger incorporated into the cavity behind the pump impeller.

If the motor is an oil-filled type, it shall be positively cooled by circulating non-toxic oil through the windings to passages within the pump designed as a heat exchanger to transfer heat to the pumped fluid. Vanes cast into the rear impeller shroud shall be provided to circulate pumped flow past a heat exchanger in the shaft seal area to provide the required cooling. Cooling water passages in the motor's shell designed to convey the pumped fluid for cooling purposes are specifically prohibited. The system shall be designed to prevent clogging by virtue of dimensions and configuration and shall be specifically configured to maintain motor temperatures within conservative limits when the pump is operating at variable speed under the operating conditions specified.

H. MOISTURE DETECTORS:

Air-filled motors 10 horsepower and larger and all oil-filled motors shall be provided with an electronic moisture detection system. A primary moisture detector shall be provided between the tandem mechanical seals. A secondary leakage sensor shall be located in the motor housing and shall be specifically designed to detect the presence of water in the motor housing. In addition, motors 15 horsepower and larger shall be fitted with moisture detectors in the cable junction box. All moisture detectors shall be wired to the junction box for connection to the specified monitoring system.

I. VARIABLE SPEED DRIVE:

The pump shall be driven by variable frequency drives specified in either Section 11069 for individually mounted VFDs or as specified in Section 16920 for MCC mounted VFDs. Variable frequency drives shall be provided separately by the Contractor and shall be furnished with circuitry to interface with the motor leak and temperature protection systems. Where proprietary or special equipment protection devices are required for mounting in the VFD enclosure (such as Flygt CAS modules), the pump manufacturer shall supply such devices to the VFD manufacturer for integration into the VFD controls circuitry. Pump manufacturer shall also coordinate with Contractor to provide any and all required device information necessary for the variable frequency drive supplier to confirm that the pump and motor combination specified herein shall operate satisfactorily with the corresponding variable frequency drive equipment. Pump manufacturer shall provide written documentation confirming that this coordination has taken place. Refer to the pump motor schematic diagram shown on the Drawings for additional information.

J. CABLES:

1. CABLE: The pump manufacturer shall provide the power/control cable(s) to connect motor to starter and sensors for leakage and over temperature to supervision relay. The cable(s) shall include seven conductors: three conductors for power, two conductors for control, and two ground conductors. The conductor sizes shall meet the requirements of Section 16000. The cable design shall be suitable for installation in a municipal wastewater pumping station. The cable length shall not exceed the product manufacturer's recommended length. The Contractor shall be responsible for determining the length of cable required to wire the motors and sensors from the wetwell to the disconnect switches and relay enclosures. The Contractor shall provide additional cable length for slack to allow the pumps to be removed from the wetwell. The length of cable for slack shall be based on the pump manufacturer's recommendation. A cable rack shall be provided and installed in the wetwell to neatly store the

cable slack when the pumps are in service. The cabling shall be direct connections without the use of any junction boxes.

2. CABLE SEAL: The cable entry water seal design shall preclude specific torque requirements to insure a watertight and submersible seal. The cable entry shall be comprised of individual cylindrical elastomer clamps having a close tolerance fit against the cable conductor insulation and the entry inside diameter and compressed by the entry body containing a strain relief function, separate from the function of sealing the cable. The cable entry junction chamber and motor shall be separated by a stator lead sealing gland, potting chamber or terminal board, which shall isolate the motor interior from foreign material gaining access through the pump top. If a potting chamber is used, the potting procedure shall employ an epoxy-potting compound combined with a procedure that insures penetration of the compound into the individual cable conductor strands to prevent development of wicking pathways for entrance of water into the motor.

3. CABLE DISCONNECTION: The pump shall be designed such that power/ control cable can be removed from the pump motor without breaking the cable seal. The power/ control cable shall be sealed to a removable motor chamber cap that shall be universally mateable to the same manufacturer's pump series. The pump shall be able to be removed from the wetwell and disconnected from the cable by removing the motor chamber cap. A spare removable chamber cap with 15 feet of cable shall be provided.

K. JUNCTION BOXES:

NEMA 7X (stainless steel) junction boxes shall be provided for both motor power and sensor leads shall be provided for termination of the thermal sensor and moisture detector leads and connection to the monitoring system indicated. The junction box shall be separate from that shown for motor power.

L. INLET NOZZLE: (NOT USED)

M. PUMP DISCHARGE CONNECTION SEAL:

The connection between the pump discharge connection shall be fitted with a replaceable dynamic sealing feature to effect a complete closure between the pump discharge flange and the mating connection on the anchor fitting described in paragraph 11347-2.03 M. The dynamic seal shall function to effect a water tight connection as further defined in this paragraph. Leakage through the seal shall not exceed 1.5 percent of the flow specified for Condition Point A when operating at pump shutoff head and not more than 1 percent of total pump flow at Condition Point B. (Reference: Condition points specified in paragraph 11347-1.01 D.)

The dynamic seal shall effect a seal meeting the requirements of this paragraph using the head developed by the pump when in operation to expand the sealing device, which may be of metallic or elastomeric construction, against the inner contours of the discharge fitting. The design of the seal shall incorporate features to protect the integrity of the seal during the pump removal/setting process. The seal shall be attached to the pump side of the pump/anchor connection and shall be easily replaceable. The seal shall be subject to field test for acceptance in accordance with the requirements of paragraph 11347-3.02.

N. PUMP ANCHORAGE, GUIDE SYSTEM AND ACCESS COVER:

The pump shall be provided with a guide system to allow easy removal of the pump without entering the wetwell. The guide rail system may be of either the single or dual rail type. The discharge connection shall be bolted to the structure as indicated and shall serve as a lower attachment for the guide rails. The discharge connection shall be either horizontal or elbow discharge type, as indicated. The anchorage system shall be designed to transmit the forces specified under paragraph 11347-1.01 F safely to the structure. Calculations and supporting documentation justifying the support design shall be provided with the submittals required under Section 11050.

The pump and guide rail system shall be designed to automatically connect the pump to the discharge piping when lowered into place on the discharge connection. The design shall be non-sparking and shall conform to UL requirements for installation in a location classified in accordance with NFPA 70, Article 500 for Class 1, Group D, Division 1 locations. The pump shall be easily removable for inspection or service, requiring no bolts, nuts, or other fastenings to be removed for this purpose, and no need for personnel to enter the pump wetwell or sump. Sealing of the pumping unit to the discharge connection shall be accomplished by a simple linear downward motion of the pump with the entire weight of the pumping unit guided to and pressing tightly against the discharge connections. No portion of the pump shall bear directly on the floor of the sump and no rotary motion of the pump shall be required for sealing. Guide bars provided for directing the pump into position or for removing the pump for maintenance shall steer the pump into proper contact with the discharge elbow. Once the pump has been positioned on its support fitting at the discharge fitting, the guide bar system shall not be required for pump support.

Unless otherwise specified, pumps shall be provided with a hinged access cover with frame cast into the top slab. Cover shall be aluminum with a skidproof design, furnished with a flush locking mechanism and shall be designed to support a uniform live load of 125 pounds per square foot with a safety factor of three. The doors shall be provided with stainless steel hinges and lifting handle shall open to 90 degrees and lock automatically in that position. The frame shall include upper attachments for the guide rails and attachments for the lifting chain and power cable. Access frames and covers shall be sized as specified. Hardware and miscellaneous attachments shall all be constructed out of ASTM A276, Type 316 stainless steel. Dielectric isolation shall be provided between dissimilar metals.

2.04 ACCESSORIES

The pump shall be provided with lifting chains, guide bars, upper guide bar brackets, intermediate guide bar brackets, cable holder assemblies, safety chain hook assemblies, discharge elbow connections, anchor bolts, and all other accessories necessary to complete the installation as specified. All connecting hardware and miscellaneous attachments shall be constructed out of ASTM A276, Type 316 stainless steel. Dielectric isolation shall be provided between dissimilar metals.

2.05 SPARE PARTS

The following spare parts shall be provided for each pump:

2 sets--all gaskets
2 sets--all bearings
2 sets--mechanical seals
2 sets—discharge connection sealing devices

Spare parts shall be packed and boxed as specified in paragraph 11000-2.12.

2.06 PRODUCT DATA

Product data shall be as specified in Section 11050 and shall also include the extended warranty as specified in paragraph 11347-3.03.

PART 3—EXECUTION

3.01 INSTALLATION

Execution shall conform to the requirements set forth in Section 11050.

3.02 FIELD TESTS

A. GENERAL:

In addition to the field test required under Section 01660, each pump shall be subjected to field tests for vibration and leakage at the connection between the pump discharge flange and the pump anchorage fitting. All field tests shall be witnessed by the Engineer.

B. STATIC SOLID PASS TEST:

Upon arrival and before installation in the project, each pump shall be given a solids pass test. The test shall consist of inserting a rigid ball of the diameter specified in paragraph 11347- 1.01 F in the pump discharge opening. The Contractor shall demonstrate that the ball will pass clear though the pump to the inlet bell with no force other than the weight of the ball used to demonstrate compliance with the requirements of this Section

C. VIBRATION:

Vibration levels shall be determined by affixing suitable sensors to the top of the motor housing in both the x-x (parallel to the nozzle) and y-y (perpendicular to the nozzle) directions. The Contractor shall provide all sensors and monitoring equipment. As a condition precedent to final acceptance of the equipment, the pumps shall be individually operated at all specified operating conditions. The Contractor shall provide the means to recirculate pumped fluid or alternatively throttle the pumps to achieve the specified head at specified flow. Vibration levels shall not exceed that specified in paragraph 11347- 1.01 G when the pump is operating within the manufacturer’s listed POR as determined in accordance with Section 11050. When

operating at conditions outside the POR, vibration levels shall be no more than 125 percent of that specified in paragraph 11347-1.01 G.

D. LEAKAGE TEST:

The leakage test shall utilize a boot seal supplied by the pump manufacturer. The boot seal shall effect a complete water tight seal around the pump discharge and anchor fitting mating flanges at a pressure equal to 125 percent of the pump shutoff head. The boot shall have a discharge connection fitted to a pressure hose which can be used to determine the rate of leakage during the acceptance testing of the equipment furnished under this section. Five sets of tests, each set consisting of two tests, one with the pump operating against a closed discharge valve and one with the pump operating at Condition B, as specified in paragraph 11347-1.01 E. Each test shall be not less than 60 seconds in duration, with the rate of leakage determined either by displacement in a vessel of known dimensions or by inline flow meter. The tests results shall be recorded and shall be averaged after discarding the test sets with the greatest and least leakage rates. The average rate of leakage from the three remaining test sets shall be determined, averaging the tests against a closed valve and at Condition Point B separately. The average rate of leakage shall not exceed that specified in paragraph 11347-2.03 L. If the discharge connection leakage rate at either against a closed valve or at Condition Point B exceeds the specified allowance, the Contractor shall cause the pump manufacturer to correct the defect and the pump shall be tested again as described in this paragraph. If the pump should fail the second test, the pump shall be removed from the site and the Contractor shall furnish a replacement which in turn shall be tested for acceptance in accordance with this paragraph.

3.03 WARRANTY

In addition to the guarantee requirements specified in Section 00710, the Contractor shall cause the pump manufacturer to warrant the units against defects in materials and workmanship for a period of 5 years beginning with the date of beneficial occupancy. This warranty shall be delivered, in writing, to the Owner and shall include, as a minimum, 100 percent full payment coverage for parts and labor.

END OF SECTION

SECTION 11348

SUBMERSIBLE WASTEWATER PUMPS FOR CONSTANT SPEED APPLICATIONS

PART 1—GENERAL

This section specifies pumps and associated accessories for municipal wastewater pumping applications. Equipment furnished under this specification shall have discharge nozzles 3 inches in diameter and larger and shall have motors 7.5 horsepower and larger.

The manufacturer shall review the mechanical and structural layout drawings to familiarize themselves with the location and the set-up of the equipment specified and shall assure themselves that the equipment specified is appropriate for and coordinated with what is shown on the contract drawings. The manufacturer shall also review the relevant electrical plan and one-line diagram and the relevant process and instrumentation diagram drawing to ensure that the contract drawings are appropriate and coordinated with the equipment and controls specified.

1.01 DESCRIPTION

A. SCOPE:

This section specifies submersible pumps for constant speed (on/off cycling) wastewater pumping complete with motor, inlet nozzle and discharge fitting, guide bar brackets, access frames, covers and accessories suitable for pumping unscreened wastewater at constant speed.

Manufacturers proposing to furnish equipment specified under this section shall hold current certification under ISO 9001-2001. Application for certification under ISO 9001 shall not be deemed as an acceptable substitute for current certification. Documentation attesting to current certification shall be signed by an officer of the manufacturer’s corporation and shall be notarized.

B. TYPE:

The pump shall be of the heavy-duty, submersible, vertical shaft, centrifugal nonclog type, suitable for pumping fluids containing unscreened wastewater solids. The pump shall be designed for continuous or cyclic operation under submerged, partially submerged or totally dry condition without damage to the pump and motor. Special attention shall be devoted to the shaft design to limit deflection under all operating conditions, as specified in this section.

C. EQUIPMENT LIST:

Item	Equipment Number
Post Anoxic Tank Drain Pump	P-3112
Plant Drain Pump 1	P-6011
Plant Drain Pump 2	P-6012

D. PUMPED FLUID AND OPERATING CONDITIONS:

The fluid to be pumped will consist of a combination of wastewater treatment plant process liquids including, but not limited to: screened raw municipal wastewater, mixed liquor, permeate, sludge and other liquids drained from any of the process tanks at the facility downstream from the influent pumping station . The temperature is anticipated to range between 55 degrees F and 85 degrees F and contain up to 5,000 mg/l of solids consisting of grit and organic material with small quantities of petroleum products and animal fats and greases. The pumped material will have a tendency to form long fibrous strings due to the rotation of the water through piping passageways.

The pumps will be operated by a control system that will start and stop the pump at constant speed based upon level in the respective wetwell. Level control systems for each pump shall be as indicated on the Process and Instrumentation Drawings and specified in Division 17.

The pumps will be installed in a reinforced trench-type or confined inlet self-cleaning wetwell designed in accordance with ANSI/HI 9.8. In either application, the pumps will be operated at constant speed, responding to a control system that will cycle the pumps in accordance with the specified program and will be used periodically to remove trapped floating and settleable solids by operating the pump to draw down the wetwell to break suction. Pumps furnished under this section shall be certified and guaranteed for a period of not less than 5 years to be maintenance free by the manufacturer.

E. PERFORMANCE REQUIREMENTS:

The performance requirements presented in tabular form below are intended to describe the results of hydraulic calculations developed using a mathematical modeling program specifically developed for the purpose. The model was intentionally used to develop the limits of expected extremes in variation of static head, coefficients for pipeline resistance and turbulence losses through fittings and valves. Equipment furnished under this section shall be fully suitable for continuous operation at any specified condition or any condition lying between the extremes of the operating conditions specified in the following table. The notes presented at the end of the table are intended to be complimentary to the information presented in the table.

Operating condition	P-3112	P-6011, P-6012
Condition A[1, 4]		
Capacity, gpm	350	400
Total head, feet	44	52
Static head, feet	38	40
NPSHA, feet	37	32
Condition B[2, 4]		
Capacity, gpm	*from pump H/Q curve*	*from pump H/Q curve*
Total head, feet	56	43
Static head, feet	48	36
NPSHA, feet	46	31
Condition C[3, 4]		
Capacity, gpm	*from pump H/Q curve*	N/A
Total head, feet	33	N/A
Static head, feet	29	N/A
NPSHA, feet	29	N/A

See table notes next page…
NOTES:

1. Condition A shall be taken as the rated operating condition. Performance at the rated condition shall be guaranteed in accordance with Section 11050. Condition A has been selected to obtain the rated pumping capacity for the installation. It is not intended that the pumps be selected for maximum efficiency at Condition A. Pumps furnished under this section should be selected to achieve Condition A performance, but also operate continuously without objectionable vibration or cavitation at the head specified under Condition B. Condition A may be located in the Allowable Operating Region as established by the pump manufacturer in accordance with ANSI/HI 9.6.3 and published in the manufacturer's published application data for the specific model proposed for this application. However, if Condition A is located in the AOR, the limiting suction specific speed for the pump selection will change (refer to paragraph 11347-1.01 F.

2. Condition B head is presented to indicate operating conditions when the pump is operating against minimum anticipated system head, assuming a hypothetical head-capacity curve. **Condition B shall be used for pump selection**. **Condition B shall be located within the Preferred Operating Region as established by the pump manufacturer in accordance with ANSI/HI 9.6.3 and listed in the manufacturer's published application data for the specific model proposed for this application.** Pumps with head-capacity curves steeper than that assumed will produce somewhat less flow at somewhat lower head. The reverse will occur with pumps having a shallower head-capacity curve.

3. Condition C head is presented to indicate operating conditions when the pump is operating against maximum anticipated system head, assuming a hypothetical head-capacity curve. **Condition C shall be located within the Acceptable Operating Region as established by the pump manufacturer in accordance with ANSI/HI 9.6.3 and listed in the manufacturer's published application data for the specific model proposed for this application.** Pumps with head-capacity curves steeper than that assumed will produce somewhat less flow at somewhat lower head. The reverse will occur with pumps having a shallower head-capacity curve.

4. Total head in the above tabulation is the algebraic difference between the discharge head and suction head as defined in ANSI/HI 1.1 – 1.6. Net positive suction head available (NPSHA) in the above tabulation is referred to the wetwell invert as shown and is calculated in accordance with ANSI/HI 1.3 for average barometric pressure and maximum temperature conditions. An allowance of five feet has been included for the presence of volatile constituents in the pumped fluid. NPSHA at the pump impeller eye can be determined by adjusting the given value by proposed pump dimensions and the indicated requirements for pump installation details. ***It is the Contractor's responsibility to make this adjustment and produce calculations justifying the proposed selection.*** Required NPSHA margin shall be as specified in Section 11050.

F. DESIGN REQUIREMENTS:

Equipment provided under this section shall conform to the following:

Item	P-3112	P-6011, P-6012
Pump		
Rigid sphere, inches diameter (min), capable of passing through the pump from inlet to discharge[1]	3	3
Maximum efficiency, minimum, percent[2]	60	60
Discharge connection size, inches, minimum:	3	3
Operating speed, rpm, maximum	1800	1800
Suction specific speed, dimensionless, maximum[4]	9,500	9,500
Motor		
Horsepower, maximum	7.5	10
Motor voltage	480	480

NOTES:

1. For pumps 10 inches in discharge nozzle diameter and less, this dimension shall be the minimum clearance between the outside diameter of the impeller and the volute cutwater. The sphere shall be a solid sphere, incapable of compression or distortion of any kind.

2. Efficiency is the minimum acceptable value at the maximum efficiency point on the pump's efficiency/capacity curve for the selected impeller, and is not necessarily to be associated with any specified operating condition. The efficiency stated shall include losses from the inlet through the pump to the discharge fitting. Any additional losses associated with the cooling water system shall also be included.

3. The inlet velocity shall not exceed 4 feet per second at Condition Point B as specified in paragraph 11347-1.01 E. A suction nozzle, fitted with a flared inlet, will be required to reduce the suction velocity to 4.0 feet per second or less, and the nozzle length must exceed the difference between the inlet and outlet diameter of the nozzle.

4. The suction specific speed limitation listed applies only to pump selections where both Operating Conditions A and B reside within the proposed pump selection's POR. Proposed selections with Operating Condition A residing in the AOR shall be limited to designs with suction specific speed less than 8500. Suction specific speed shall be calculated for the maximum pump design speed and impeller diameter, using the capacity in gallons per minute and NPSH3 at Best Efficiency in accordance with the procedures set for in the standards of the Hydraulic Institute

Except as specifically referenced in this section, Section 11050 provisions will not apply to equipment furnished under this section.

Equipment furnished under this section shall be specifically certified by the manufacturer as suitable for operation in trench type or confined inlet wetwells where the wetwell will be cleaned using the pumping equipment. Pump anchorage systems, including the discharge piping, shall be restrained against the short-term buffeting caused by the cleaning process, where velocities in the wetwell or inlet well are expected to reach 15 ft/sec, with the liquid level at or below the top of the motor housing. The design of the anchorage system shall be the responsibility of the pump manufacturer and shall be the product of a structural engineer licensed to practice in the State of Georgia. This requirement, however, shall not be construed by any party as one which relieves the Contractor of overall responsibility for the conformance to all project requirements.

Pump anchorage systems shall be designed to restrain the unbalanced hydraulic thrust developed by the pump at the specified speed and during the starting and stopping conditions. In applications within known seismic zones, the pump anchorage provisions shall be designed in accordance with the governing local building code. The analysis for the anchorage system in known seismic zones shall include the affect of differential loads imposed by water in the wetwell moving in response to the design seismic event.

G. VIBRATION AND CRITICAL SPEEDS:

The pump, when operating within the manufacturer's listed POR, as specified in Section 11050, with wetwell levels as indicated for normal (not cleaning) operation, shall comply with the requirements of ISO 10816, Zone B. Vibration at any specified operating condition that is located outside the manufacturer's listed POR shall not exceed 125 percent of the limiting values in ISO 10816, Zone B. Vibration levels shall be subject to field verification as specified in paragraph 11347-3.02.

1.02 QUALITY ASSURANCE

A. REFERENCES:

References shall be as set forth in Section 11050. In addition, this section (Section 11347) contains references to the following documents. They are a part of this section and any referencing section as specified and modified. Where a referenced document contains references to other standards, those documents are included as references under this section as if referenced directly. In the event of conflict between the requirements of this section or any referencing section and those of the listed documents, the following order of precedence shall prevail (listed in the order of primacy):

1. This section
2. Section 11050
3. The referencing section.
4. The referenced document.

Unless otherwise specified, references to documents shall mean the documents in effect at the time of Advertisement for Bids or Invitation to Bid (or on the effective date of the Agreement if there were no Bids). If referenced documents have been discontinued by the issuing organization, references to those documents shall mean the replacement documents issued or otherwise identified by that organization or, if there are no replacement documents, the last version of the document before it was discontinued. Where document dates are given in the following listing, references to those documents shall mean the specific document version associated with that date, regardless of whether the document has been superseded by a version with a later date, discontinued or replaced.

Reference	Title
ISO 9001-2001	Quality Systems
ISO 10816	Machine Vibration – Evaluation of machine vibration by measurements on non-rotating parts
NEMA MG 1	Motors and Generators
UL 674	Motors and Generators, Electric, for Use in Hazardous Locations, Class I, Groups C and D, Class II, Groups E, F, and G
UL 1207	Sewage Pumps for Use in Hazardous (Classified) Locations

B. PERFORMANCE CONFIRMATION:

The pump shall be subject to a non-witnessed factory test in accordance with the requirements of Section 11050. The test procedure shall follow the requirements of ANSI/HI 14.6, acceptance grade 1E. All other tests shall conform to the requirements set forth in ANSI/HI 11.6 and the requirements set forth in this section. Failure to achieve guaranteed performance or performance proposed in accepted submittal documents, whichever is the more restrictive (capacity and head, efficiency or NPSH3) shall be cause for rejection. Any deviations from specified limiting values shall be subject to review by the Engineer. In addition, the following procedures shall be followed:

1. Impeller, motor rating and electrical connections shall first be checked for compliance with the specifications.

2. Prior to submergence, the pump shall be run dry to establish correct rotation and mechanical integrity.

3. The pump shall be run for 30 minutes submerged, with a minimum of 6 feet of water over the top of the motor. Following this warm-up period, the pump shall be subjected to the performance and NPSHR tests specified in Section 11050.

4. After satisfactory completion of the performance and NPSHR tests, the motor shall be subjected to a housing leakage test performed under vacuum in accordance with paragraph 11.6.7.2.2 of ANSI/HI 11.6.

5. All motor circuits, including thermal and moisture sensors and the moisture sensors in the shaft seal area shall be subjected to electrical resistance tests to determine functionality.

A written report stating the tests have successfully been completed along with the results of the tests required under Section 11050 shall be provided, certified in accordance with Section 11050, as product data.

1.03 SUBMITTALS

In addition to the requirements of this section, submittals shall conform to the requirements of the following:

Section 11000: GENERAL REQUIREMENTS FOR EQUIPMENT

Section 11050: GENERAL REQUIREMENTS FOR CENTRIFUGAL AND AXIAL FLOW PUMPING EQUIPMENT

and shall include the following:

1. Proof of service of previously installed units of similar size and configuration in wetwells of the type described in paragraph 11347-1.01 D.

2. Shaft deflection calculations

3. Anchorage calculations and required documentation

4. Cooling system calculations

5. Field vibration test protocol as specified in Part 3 – Execution

6. Field discharge connection leakage test, as specified in Part 3 – Execution.

PART 2--PRODUCTS

2.01 ACCEPTABLE PRODUCTS

The Owner and Engineer believe the following manufacturers are capable of producing equipment and products, which will satisfy the requirements of this Section. This statement, however, shall not be construed as an endorsement of a particular manufacturer's product, nor shall it be construed that a named manufacturer's standard product will comply with the requirements of this Section. Candidate manufacturers include ABS Pumps, Fairbanks Morse, KSB, Wilo-EMU, Xylem, or manufacturers with equivalent products capable of meeting the specified performance and producing a product for this application which will comply with the specified features.

2.02 MATERIALS

Material employed for the construction of equipment provided under this specification shall be as follows:

Component	Material
Pump and motor casing	
Specified head < 100 ft	Cast iron, ASTM A48, Class 30
Specified head > 100 ft	Cast ductile iron, ASTM A 536, Class 65-45-12
Discharge elbow	
Specified head < 100 ft	Cast iron, ASTM A48, Class 30
Specified head > 100 ft	Cast Ductile iron, ASTM A 536, Class 65-45-12
Inlet nozzle and bell	Cast Iron, ASTM A48, Class 30 or forged steel
Impeller	Cast stainless steel, ASTM A744

Component	Material
Motor and pump shaft	Stainless steel, ASTM A276 Type 329, 403, 420 or 416
Wearing rings	Stainless steel, ASTM A276 Series 440B
External bolts and nuts	Stainless steel, ASTM A276 Type 316
Guide bar brackets	Stainless steel, ASTM A276 Type 316
Anchor bolts	Stainless steel, ASTM A276 Type 316
Guide rails, lifting assemblies	Stainless steel, ASTM A276 Type 316

Materials specified are considered the minimum acceptable for the purposes of durability, strength, and resistance to erosion and corrosion. The Contractor may propose alternative materials for the purpose of providing greater strength or to meet required stress limitations. However, alternative materials must provide at least the same qualities as those specified for the purpose. If alternatives are proposed, the proposals shall be accompanied with documentation supporting the claimed superiority of the proposed substitutions.

2.03 EQUIPMENT FEATURES

A. GENERAL:

The motor and rotating parts shall be removable from the motor end of the pump. All motor mating surfaces where watertight sealing is required shall be machined and fitted with nitrile O-rings. The pump shall be fitted with a dynamically balanced nonclog impeller designed to pass coarse solids and stringy materials. The pump shall be listed by Factory Mutual or Underwriters Laboratory as conforming in all respects to the requirements in UL 1207.

B. CASING:

The volute casing shall be a one-piece casting with a tangential or center discharge nozzle. The volute shall be designed for efficient conversion of kinetic to potential energy and shall have clear passageways designed to pass the solid sphere specified under paragraph 11347-1.01 F. The solids passing capability of the furnished equipment will be subjected to a field test in accordance with paragraph 11347- 3.02 B.

The cutwater shall be specifically designed for use in fluids with stringy solids and rags. The volute casting shall be specifically designed to bear the loads associated with removal and placement of the pump when submerged or exposed and to withstand the loads imposed by the operations specified under paragraphs 11347-1.01 E and 11347-1.01 F. The discharge nozzle shall be not less than the diameter specified under paragraph 11347-1.01 F. and shall be reinforced for the loads imposed by the specified conditions of service. The nozzle flange face shall be designed to mate with the discharge fitting specified in paragraph 11347-2.03 L. The volute casing shall be drilled and tapped or otherwise fitted with an inlet nozzle conforming to the requirements specified in paragraph 11347-2.03 K.

C. SHAFT:

The pump shaft shall be turned, ground and polished, of proportions suitable for use in the specified application. The shaft shall be of sufficient section to limit deflection at the shaft seal to not more than 1.5 mils when the pump is operating at any continuous-duty point defined by the envelope of conditions specified under paragraph 11347-1.01 E. The method for calculating shaft deflection shall be as established in Section 11050. Additionally, under no circumstances shall the distance from the lower bearing and the hub of the impeller exceed two times the diameter of the shaft. The documentation required under Section 11050 shall be included as a submittal along with all other documentation required by paragraph 11347-1.03.

D. BEARINGS:

Bearings shall be heavy-duty, oil lubricated or permanently greased lubricated anti-friction type double shielded and factory sealed. Bearings shall be designed for an L-10 rating life of at least 50,000 hours at any operating condition specified under paragraph 11347-1.01 E. Loads for radial bearing calculations shall be calculated in accordance with paragraph 11347-2.03 C.

E. IMPELLER:

The impeller shall be dynamically balanced after trimming to the diameter required by the specified operating conditions, and have a nonclog design capable of passing solids, fibrous materials, heavy sludge, and other matter found in wastewater applications through to the discharge nozzle. Impellers for pumps with discharges 8 inches in diameter and greater shall be not less than two-vane design. Fit between the impeller and the shaft shall be a sliding fit with a taper-lock bushing pressed by a screw, which is threaded into the end of the shaft, or a slip fit onto the shaft and drive key and fastened to the shaft by an impeller nut having cover for protection from pumped fluid. A wearing ring system designed for abrasion resistance shall provide efficient sealing between the volute and impeller.

F. MECHANICAL SEALS:

The pump shall be provided with a tandem double mechanical seal running in an oil reservoir, composed of two separate lapped face seals. The lower seal unit, between the pump and oil chamber, shall consist of one stationary and one positively driven, rotating tungsten-carbide or ring, with each pair of rings held in contact by a separate spring. The upper seal unit, between the oil sump and the motor housing, shall consist of one stationary tungsten-carbide or silicon-carbide ring and one positively driven silicon-carbide or rotating carbon ring. Ceramic seals will not be acceptable. The seals shall require neither maintenance nor adjustment and shall be easily replaceable. Conventional double mechanical seals with a single or a double spring between the rotating faces, or that require constant differential pressure to effect sealing and are subject to opening and penetration by pumping forces, will not be acceptable. The pump shall be capable of continuous submergence without loss of watertight integrity to a depth of 65 feet.

Each pump shall be provided with a seal lubricant chamber for the shaft sealing system. The seal lubricant chamber shall be designed to assure that an air pocket is provided in the seal lubricant chamber, to absorb the expansion of the seal lubricant due to temperature variations.

The drain and inspection plug with positive anti-leak seal shall be easily accessible from the outside.

G. MOTOR:

The pump motor shall be a squirrel-cage induction, shell type design, housed in an air-filled or an oil-filled, watertight chamber, NEMA B type Inverter Duty with a service factor of 1.15 based upon nameplate rating. The manufacturer shall furnish an unqualified warranty guaranteeing (full replacement at no cost to the Owner) the performance of the motors furnished under this project for a period of five years when operating under the specified conditions. The stator winding and stator leads shall be insulated with moisture resistant Class H insulation, which shall be rated at a temperature of 155 degrees C. The motor shall be designed for continuous duty, capable of sustaining a minimum of 12 starts per hour. The temperature rise of the motor shall not be in excess of that specified in NEMA MG-1 for class B insulating materials when operating continuously under load. Motors shall be Factory Mutual or UL listed in accordance with UL 674 and 1207 for Class I, Group D hazardous atmospheres. The junction chamber, containing the terminal board, shall be hermetically sealed from the motor. Connection between the cable conductors and stator leads shall be made with threaded compressed type binding post permanently affixed to a terminal board. The submersible electrical cable shall be of sufficient length to reach the junction box indicated.

The cooling system may be of the oil filled or air filled motor housing type. Thermal sensors shall be provided to monitor stator temperatures. The stator shall be equipped with three thermal sensors, embedded in the end coils of the stator winding (one sensor in each stator phase). These shall be used in conjunction with external motor overload protection and wired to the control panel. The design shall be suitable for continuous motor operation at listed motor rating in 95 degree F water.

The cooling system may rely on radiation of excess heat energy to the fluid in the wetwell or, alternatively, the pumped fluid via a closed circuit circulating system utilizing either oil or glycol, or a combination of these. It is specifically required that the cooling system must be compatible with the contemplated control schedule, which may require that the motor case to be exposed continuously or intermittently. Cooling systems shall not employ the pumped fluid to directly cool the motor through wastewater passageways incorporated into the motor shell. It is preferred that the motor be cooled by the wastewater via fins incorporated into the motor shell. If an internal liquid circulation system is employed for cooling purposes, the liquid shall be glycol or heat transfer oil, which shall in turn circulate a heat exchanger incorporated into the cavity behind the pump impeller.

If the motor is an oil-filled type, it shall be positively cooled by circulating non-toxic oil through the windings to passages within the pump designed as a heat exchanger to transfer heat to the pumped fluid. Vanes cast into the rear impeller shroud shall be provided to circulate pumped flow past a heat exchanger in the shaft seal area to provide the required cooling. Cooling water passages in the motor’s shell designed to convey the pumped fluid for cooling purposes are specifically prohibited. The system shall be designed to prevent clogging by virtue of dimensions and configuration and shall be specifically configured to maintain motor temperatures within conservative limits when the pump is operating at variable speed under the operating conditions specified.

H. MOISTURE DETECTORS:

Air-filled motors 10 horsepower and larger and all oil-filled motors shall be provided with an electronic moisture detection system. A primary moisture detector shall be provided between the tandem mechanical seals. A secondary leakage sensor shall be located in the motor housing and shall be specifically designed to detect the presence of water in the motor housing. In addition, motors 15 horsepower and larger shall be fitted with moisture detectors in the cable junction box. All moisture detectors shall be wired to the junction box for connection to the specified monitoring system.

I. PUMP AND MOTOR PROTECTION SYSTEMS:

The pump shall be driven by motor control equipment specified in Section 16920 MCC's. Motor starters and MCC's shall be provided separately by the Contractor and shall be furnished with circuitry to interface with the motor leak and temperature protection systems. Where proprietary or special equipment protection devices are required for mounting in the MCC/Starter bucket/enclosure (such as Flygt CAS modules), the pump manufacturer shall supply such devices to the MCC manufacturer for integration into the MCC controls circuitry.

J. CABLES:

1. CABLE: The pump manufacturer shall provide the power/control cable(s) to connect motor to starter and sensors for leakage and over temperature to supervision relay. The cable(s) shall include seven conductors: three conductors for power, two conductors for control, and two ground conductors. The conductor sizes shall meet the requirements of Section 16000. The cable design shall be suitable for installation in a municipal wastewater pumping station. The cable length shall not exceed the product manufacturer's recommended length. The Contractor shall be responsible for determining the length of cable required to wire the motors and sensors from the wetwell to the disconnect switches and relay enclosures. The Contractor shall provide additional cable length for slack to allow the pumps to be removed from the wetwell. The length of cable for slack shall be based on the pump manufacturer's recommendation. A cable rack shall be provided and installed in the wetwell to neatly store the cable slack when the pumps are in service. The cabling shall be direct connections without the use of any junction boxes.

2. CABLE SEAL: The cable entry water seal design shall preclude specific torque requirements to insure a watertight and submersible seal. The cable entry shall be comprised of individual cylindrical elastomer clamps having a close tolerance fit against the cable conductor insulation and the entry inside diameter and compressed by the entry body containing a strain relief function, separate from the function of sealing the cable. The cable entry junction chamber and motor shall be separated by a stator lead sealing gland, potting chamber or terminal board, which shall isolate the motor interior from foreign material gaining access through the pump top. If a potting chamber is used, the potting procedure shall employ an epoxy-potting compound combined with a procedure that insures penetration of the compound into the individual cable conductor strands to prevent development of wicking pathways for entrance of water into the motor.

3. CABLE DISCONNECTION: The pump shall be designed such that power/ control cable can be removed from the pump motor without breaking the cable seal. The power/

control cable shall be sealed to a removable motor chamber cap that shall be universally mateable to the same manufacturer's pump series. The pump shall be able to be removed from the wetwell and disconnected from the cable by removing the motor chamber cap. A spare removable chamber cap with 15 feet of cable shall be provided.

K. JUNCTION BOXES:

NEMA 7X (stainless steel) junction boxes shall be provided for both motor power and sensor leads shall be provided for termination of the thermal sensor and moisture detector leads and connection to the monitoring system indicated. The junction box shall be separate from that shown for motor power.

L. INLET NOZZLES (NOT USED)

M. PUMP DISCHARGE CONNECTION SEAL:

The connection between the pump discharge connection shall be fitted with a replaceable dynamic sealing feature to effect a complete closure between the pump discharge flange and the mating connection on the anchor fitting described in paragraph 11347-2.03 N. The dynamic seal shall function to effect a water tight connection as further defined in this paragraph. Leakage through the seal shall not exceed 1.5 percent of the flow specified for Condition Point A when operating at pump shutoff head and not more than 1 percent of total pump flow at Condition Point B. (Reference: Condition points specified in paragraph 11347-1.01 D.)

The dynamic seal shall effect a seal meeting the requirements of this paragraph using the head developed by the pump when in operation to expand the sealing device, which may be of metallic or elastomeric construction, against the inner contours of the discharge fitting. The design of the seal shall incorporate features to protect the integrity of the seal during the pump removal/setting process. The seal shall be attached to the pump side of the pump/anchor connection and shall be easily replaceable. The seal shall be subject to field test for acceptance in accordance with the requirements of paragraph 11347-3.02.

N. PUMP ANCHORAGE, GUIDE SYSTEM AND ACCESS COVER:

The pump shall be provided with a guide system to allow easy removal of the pump without entering the wetwell. The guide rail system may be of either the single or dual rail type. The discharge connection shall be bolted to the structure as indicated and shall serve as a lower attachment for the guide rails. The discharge connection shall be either horizontal or elbow discharge type, as indicated. The anchorage system shall be designed to transmit the forces specified under paragraph 11347-1.01 F safely to the structure. Calculations and supporting documentation justifying the support design shall be provided with the submittals required under Section 11050.

The pump and guide rail system shall be designed to automatically connect the pump to the discharge piping when lowered into place on the discharge connection. The design shall be non-sparking and shall conform to UL requirements for installation in a location classified in accordance with NFPA 70, Article 500 for Class 1, Group D, Division 1 locations. The pump shall be easily removable for inspection or service, requiring no bolts, nuts, or other fastenings

to be removed for this purpose, and no need for personnel to enter the pump wetwell or sump. Sealing of the pumping unit to the discharge connection shall be accomplished by a simple linear downward motion of the pump with the entire weight of the pumping unit guided to and pressing tightly against the discharge connections. No portion of the pump shall bear directly on the floor of the sump and no rotary motion of the pump shall be required for sealing. Guide bars provided for directing the pump into position or for removing the pump for maintenance shall steer the pump into proper contact with the discharge elbow. Once the pump has been positioned on its support fitting at the discharge fitting, the guide bar system shall not be required for pump support.

Unless otherwise specified, pumps installed in structures located out of doors shall be provided with a hinged access cover with frame cast into the top slab. Cover shall be aluminum with a skidproof design, furnished with a flush locking mechanism and shall be designed to support a uniform live load of 125 pounds per square foot with a safety factor of three. The doors shall be provided with stainless steel hinges and lifting handle shall open to 90 degrees and lock automatically in that position. The frame shall include upper attachments for the guide rails and attachments for the lifting chain and power cable. Access frames and covers shall be sized as specified. Hardware and miscellaneous attachments shall all be constructed out of ASTM A276, Type 316 stainless steel. Dielectric isolation shall be provided for dissimilar metals.

2.04 ACCESSORIES

The pump shall be provided with lifting chains, guide bars, upper guide bar brackets, intermediate guide bar brackets, cable holder assemblies, safety chain hook assemblies, discharge elbow connections, anchor bolts, and all other accessories necessary to complete the installation as specified. All connecting hardware and miscellaneous attachments shall be constructed out of ASTM A276, Type 316 stainless steel. Dielectric isolation shall be provided for dissimilar metals.

2.05 SPARE PARTS

The following spare parts shall be provided for each pump:

2 sets--all gaskets
2 sets--all bearings
2 sets--mechanical seals
2 sets—discharge connection sealing devices
Spare parts shall be packed and boxed as specified in paragraph 11000-2.12.

2.06 PRODUCT DATA

Product data shall be as specified in Section 11050 and shall also include the extended warranty as specified in paragraph 11347-3.03.

PART 3—EXECUTION

3.01 INSTALLATION

Execution shall conform to the requirements set forth in Section 11050.

3.02 FIELD TESTS

A. GENERAL:

In addition to the field test required under Section 01660, each pump shall be subjected to field tests for vibration and leakage at the connection between the pump discharge flange and the pump anchorage fitting. All field tests shall be witnessed by the Engineer.

B. STATIC SOLID PASS TEST:

Upon arrival and before installation in the project, each pump shall be given a solids pass test. The test shall consist of inserting a rigid ball of the diameter specified in paragraph 11347-1.01 F in the pump discharge opening. The Contractor shall demonstrate that the ball will pass clear though the pump to the inlet bell with no force other than the weight of the ball used to demonstrate compliance with the requirements of this Section

C. VIBRATION:

Vibration levels shall be determined by affixing suitable sensors to the top of the motor housing in both the x-x (parallel to the nozzle) and y-y (perpendicular to the nozzle) directions. The Contractor shall provide all sensors and monitoring equipment. As a condition precedent to final acceptance of the equipment, the pumps shall be individually operated at all specified operating conditions. The Contractor shall provide the means to recirculate pumped fluid or alternatively throttle the pumps to achieve the specified head at specified flow. Vibration levels shall not exceed that specified in paragraph 11347- 1.01 G when the pump is operating within the manufacturer's listed POR as determined in accordance with Section 11050. When operating at conditions outside the POR, vibration levels shall be no more than 125 percent of that specified in paragraph 11347-1.01 G.

D. LEAKAGE TEST:

The leakage test shall utilize a boot seal supplied by the pump manufacturer. The boot seal shall effect a complete water tight seal around the pump discharge and anchor fitting mating flanges at a pressure equal to 125 percent of the pump shutoff head. The boot shall have a discharge connection fitted to a pressure hose which can be used to determine the rate of leakage during the acceptance testing of the equipment furnished under this section. Five sets of tests, each set consisting of two tests, one with the pump operating against a closed discharge valve and one with the pump operating at Condition B, as specified in paragraph 11347-1.01 E. Each test shall be not less than 60 seconds in duration, with the rate of leakage determined either by displacement in a vessel of known dimensions or by inline flow meter. The tests results shall be recorded and shall be averaged after discarding the test sets with the greatest and least leakage rates. The average rate of leakage from the three remaining test sets shall be determined, averaging the tests against a closed valve and at Condition Point B

separately. The average rate of leakage shall not exceed that specified in paragraph 11347-2.03 L. If the discharge connection leakage rate at either against a closed valve or at Condition Point B exceeds the specified allowance, the Contractor shall cause the pump manufacturer to correct the defect and the pump shall be tested again as described in this paragraph. If the pump should fail the second test, the pump shall be removed from the site and the Contractor shall furnish a replacement which in turn shall be tested for acceptance in accordance with this paragraph.

3.03 WARRANTY

In addition to the guarantee requirements specified in Section 00710, the Contractor shall cause the pump manufacturer to warrant the units against defects in materials and workmanship for a period of 5 years beginning with the date of beneficial occupancy. This warranty shall be delivered, in writing, to the Owner and shall include, as a minimum, 100 percent full payment coverage for parts and labor.

END OF SECTION

SECTION 11355

RECESSED IMPELLER PUMPS, SEVERE DUTY

PART 1--GENERAL

1.01 DESCRIPTION

A. SCOPE:

This section specifies recessed impeller vortex pumps with frames and drive units for pumping sludge, large solids, and abrasive slurries. The pumps shall be of a heavy-duty cup-type or radial vane construction, capable of handling large solids and abrasive particles.

The manufacturer shall review the mechanical and structural layout drawings to familiarize themselves with the location and the set-up of the equipment specified and shall assure themselves that the equipment specified is appropriate for and coordinated with what is shown on the contract drawings. The manufacturer shall also review the relevant electrical plan and one-line diagram and the relevant process and instrumentation diagram drawing to ensure that the contract drawings are appropriate and coordinated with the equipment and controls specified.

B. EQUIPMENT LIST:

Item	Equipment No.
Grit Pump 1	P-2021
Grit Pump 2	P-2022

C. PERFORMANCE REQUIREMENTS:

Pumps shall perform in accordance with the following:

Equipment number	P-2031, P-2032
Condition A[1,4]	
Capacity, gpm	250
Total head, ft	18
Static head, ft	5
NPSHA, ft	45
Condition B[2,4]	
Capacity, gpm	From Pump H/Q Curve
Total head, ft	15
Static head, ft	4
NPSHA, ft	43

NOTES:

1. Condition A shall be taken as the rated operating condition. Performance at the rated condition shall be guaranteed in accordance with Section 11050. Condition A has been selected to obtain the rated pumping capacity for the installation. It is not intended that the pumps be selected for maximum efficiency at Condition A. Pumps furnished under this section should be selected to achieve Condition A performance, but also operate continuously without objectionable vibration or cavitation at the head specified under Condition B. Condition A may be located in the Allowable Operating Region as established by the pump manufacturer in accordance with ANSI/HI 9.6.3 and published in the manufacturer's published application data for the specific model proposed for this application.

2. Condition B head is presented to indicate operating conditions when the pump is operating **against minimum anticipated system head at the speed required for Condition A above**, assuming a hypothetical head-capacity curve. **Condition B shall be located within the Preferred Operating Region as established by the pump manufacturer in accordance with ANSI/HI 9.6.3 and listed in the manufacturer's published application data for the specific model proposed for this application.** NPSHA, as listed for Condition B is calculated based on a pumped flow of 350 gpm.

3. Total head in the above tabulation is the algebraic difference between the discharge head and suction head as defined in ANSI/HI 1.1 – 1.6. Net positive suction head available (NPSHA) in the above tabulation is referred to the wetwell invert as shown and is calculated in accordance with ANSI/HI 1.3 for average barometric pressure and maximum temperature conditions. NPSHA at the pump impeller eye can be determined by adjusting the given value by proposed pump dimensions and the indicated requirements for pump installation details. An allowance of three feet has been included for the presence of volatile constituents in the pumped fluid. Required NPSHA margin shall be as specified in Section 11050.

D. CHARACTERISTICS:

Equipment Number	P-2021 & P-2022
Pump	
Min. Inlet and Discharge size, inch	3
Motor	
Speed, maximum, rpm	800
Horsepower, required rating	7.5
Type (Reference: Section 11060)	Type 3
V-Belt Drive	
Min. Speed adjustment ratio, %	± 25

E. SERVICE CONDITIONS AND ENVIRONMENT:

Grit pumps specified for this project shall deliver grit slurry from a vortex-type grit removal tanks as specified in Section 11148 and piping configurations as shown on the Drawings. The pumps will deliver slurry directly to dedicated cyclone-type grit concentrators via discharge piping configured into a standpipe providing a positive static head on the pumps.

The grit pumps shall be located indoors within the Headworks area of the new treatment facility building. The indoor area will be a Class 1, Division 2 environment per NFPA 820. The equipment provided under this Section shall be suitable for this environment. For additional environmental conditions, reference Section 01800.

The pumps shall be capable of pumping at the rated conditions specified in this section a wastewater fluid from a grit tank at the headworks of a wastewater treatment plant which has a temperature of between 55 degrees F and 85 degrees and consists of abrasive grit slurry containing up to 5 % solids. The wastewater shall also further contain limited amounts of fats, oils and greases typical of raw sewage. All internal openings in the pumping system shall be large enough to pass a 3-inch sphere.

The pumps shall be capable of passing without clogging of greater than 300 microns solid as well as lengths of string, twine and rope of up to 10 feet long.

F. ADDITIONAL SECTIONS AND PARAGRAPHS REQUIRED FOR COMPLIANCE:

The equipment specified in this section shall be provided in accordance with the following additional sections and paragraphs. This is not a comprehensive list of related and referenced sections and paragraphs and additional related and referenced sections and paragraphs requiring compliance may be specified throughout this section and within other sections. This list is provided as a convenience for the Contractor. Related and referenced sections shall be reviewed and submittal information provided as required in paragraph 1.03 of this section.

1. 11000 General Requirements for Equipment
2. 11002 Equipment Mounting
3. 11060 Electric Motors

1.02 QUALITY ASSURANCE

A. GENERAL:

Pumps shall be capable of continuous operation, pumping abrasive and fibrous slurries such as grit. Pump shall be of a fully recessed impeller design, with the impeller mounted completely out of the flow path between pump inlet and outlet connections.

B. UNIT RESPONSIBILITY:

The Contractor shall assign Unit Responsibility to the pump manufacturer in conformance with the requirements of Section 11000.

C. REFERENCES:

This section contains references to the following documents. They are a part of this section as specified and modified. Where a referenced document contains references to other standards, those documents are included as references under this section as if referenced directly. In the event of conflict between the requirements of this section and those of the listed documents, the requirements of this section shall prevail.

Unless otherwise specified, references to documents shall mean the documents in effect at the time of Advertisement for Bids or Invitation to Bid (or on the effective date of the Agreement if there were no Bids). If referenced documents have been discontinued by the issuing organization, references to those documents shall mean the replacement documents issued or otherwise identified by that organization or, if there are no replacement documents, the last version of the document before it was discontinued. Where document dates are given in the following listing, references to those documents shall mean the specific document version associated with that date, regardless of whether the document has been superseded by a version with a later date, discontinued or replaced.

Reference	Title
ASTM A36	Structural Steel
ASTM A48 Class 30	Cast Iron Castings
ASTM 410	Stainless Steel
ASTM A48	Gray Iron Castings
ASTM A108	Steel Bars, Carbon, Cold-Finished, Standard Quality
ASTM A276	Stainless and Heat-Resisting Steel Bars and Shapes
ASTM A532/A532M	Abrasion-Resistant Cast Irons

D. WARRANTY AND PERFORMANCE AFFIDAVIT:

A one year 100% parts and labor warranty against manufacturing defects or failure of the equipment specified in this section caused by normal wear and tear shall be provided. The warranty period shall start from the date of final acceptance of the equipment specified in this section.

No performance affidavit above and beyond the inclusion of the check-marked section(s) as specified in the Submittals paragraph of this section is specified.

1.03 SUBMITTALS

The following information shall be provided in accordance with Section 01300:

1. A copy of this specification section, with addendum updates included, and all referenced and applicable sections, with addendum updates included, with each paragraph check-marked to indicate specification compliance or marked to indicate requested deviations from specification requirements. Check marks (✓) shall denote full compliance with a paragraph as a whole. If deviations from the specifications are indicated, and therefore requested by the Contractor, each deviation shall be underlined and denoted by a number in the margin to the right of the identified paragraph, referenced to a detailed written explanation of the reasons for requesting the deviation. The Engineer shall be the final authority for determining acceptability of requested deviations. The remaining portions of the paragraph not underlined will signify compliance on the part of the Contractor with the specifications. *Failure to include a copy of the marked-up specification sections, along with justification(s) for any requested deviations to the specification requirements, with the submittal shall be sufficient cause for rejection of the entire submittal with no further consideration.*

2. A copy of the contract document control diagrams and process and instrumentation diagrams relating to the submitted equipment, with addendum updates that apply to the equipment in this section, marked to show specific changes necessary for the equipment proposed in the submittal. If no changes are required, the drawing or drawings shall be marked *"no changes required." Failure to include copies of the relevant drawings with the submittal shall be cause for rejection of the entire submittal with no further review.*

3. Certificate of Unit Responsibility attesting that the Contractor has assigned unit responsibility in accordance with the requirements of this section and paragraph 11000-1.02 C. *No other submittal material will be reviewed until the certificate has been received and found to be in conformance with these requirements.*

4. Performance curves developed for specified operating conditions showing relationship between flow, head, efficiency, horsepower, and NPSH Required information over the manufacturer's recommended range of operation.

5. Equipment control wiring diagram identifying internal and face mounted components and connections to remote equipment.

6. Shop drawings indicating construction and installation details, a complete detailing of the materials construction and equipment weights.

7. Motor data from 11060-A as required in Section 11060.

8. Factory testing information either as standard from the manufacturer or as

specifically required in this section.

9. Dimensioned drawings of all equipment and accessories as a complete system including cross-section views. Drawings shall show required access and clearances, including any layout requirements of the equipment

10. Warranty information.

PART 2--PRODUCTS

2.01 MANUFACTURERS

The Engineer believes the following candidate manufacturers (listed alphabetically; not by order of preference) are capable of producing equipment and/or products that will satisfy the requirements of this Section. This statement, however, shall not be construed as an endorsement of a particular manufacturer's products, nor shall it be construed that named manufacturer's standard equipment or products will comply with the requirements of this Section. Candidate manufacturers and specific model numbers shall include Fairbanks Morse Model 4500C; Hayward Gordon (Torus XR Series); Morris (Model 6100) CT; and Wemco (Model C).

Only these specific models from these named manufacturers, modified to meet the requirements of this section, will be considered. Connection sizes listed under paragraph 1.01 D shall be the specific sizes connecting directly to the pump casing. Reducers or increasers shall not be used to achieve the listed sizes. Manufacturers with competing products will be considered so long as not less than 10 years acceptable performance at not less than 5 separate sites in equivalent applications and full compliance with this section can be demonstrated.

V-belt drives shall be as manufacturer by Hi-Lo manufacturing, Stacy, Minnesota. No other will be accepted.

2.02 MATERIALS

Material employed for the construction of equipment provided under this specification shall be as follows:

Component	Material
Casing and impeller	Ni-hard or hardened high chrome iron, ASTM A532, with Brinell hardness of 600 minimum
Frame	Cast iron, ASTM A48, Class 25/35
Shaft	Steel ASTM A108, Grade 1141 or 1045 or AISI 4140
Shaft Sleeve	Stainless steel ASTM A276, Type 416, 420, or 410. Brinell Hardness of 400 min. 316 stainless steel

Component	Material
	where mechanical seals are specified.
Stuffing Box	Cast Iron A-48 Class 30
Water Lubricated Seal	
Lantern ring	Teflon
Packing ring	Non-asbestos, Teflon w/GFO fiber
Split gland	Bronze or 316 stainless steel
O-ring	Buna-N
Bearing Frame	Cast Iron
Anchor Bolts	Stainless steel, ASTM A276 type 304
Baseplates and Casing Supports	Fabricated steel, ASTM A36, cast iron, ASTM A48 or matching casing material as specified

Additional shaft packing requirements are specified in paragraph 11000-2.04 C. Materials specified are considered the minimum acceptable for the purposes of durability, strength, and resistance to erosion and corrosion. The Contractor may propose alternative materials for the purpose of providing greater strength or to meet required stress limitations. However, alternative materials must provide at least the same qualities as those specified for the purpose.

2.03 EQUIPMENT FEATURES

A. GENERAL:

Design of each pump shall be such that pumping action is provided by the vortex induced by rotation of the impeller with the impeller completely out of the flow path from the suction to the discharge. Two different pump designs using either cup-type or radial vane impellers are specified below.

B. CASING:

Pumps with three-piece construction shall consist of a heavy duty casing with a removable and replaceable suction wearplate and back plate. The three-piece construction design shall consist of a removable suction piece large enough for the impeller to be withdrawn without the need to disturb the discharge piping; and a volute casing with integral discharge flange plus a separate rear wear liner.

Pumps with the back pull-out design shall consist of a one piece casting with integral suction and discharge nozzles plus a back plate with integral wear element. The casing shall have cast on feet, which shall fully support the volute, to allow removal of the complete rotating assembly, without disturbing suction and discharge piping. The pump casing thickness shall be a minimum of 0.5 inch for 3" pumps, 0.75 inch for 4" and 6" pumps, and 1.0 inch for 8" pumps, with normal casting tolerances.

The casing shall be independently supported from the baseplate in a manner which shall allow complete withdrawal of the backhead, bearing frame and rotor in the three-piece construction

type or withdrawal of the complete rotating assembly in the one-piece casing type without disturbing the casing or the motor. The casing support shall be designed to fully support the weight of the casing and all external loads imposed upon the casing. The support shall bolt to the baseplate with capscrews. Provisions shall be made to dowel the support to the baseplate after final alignment.

C. IMPELLER:

The impeller shall be fully recessed out of the casing passage and must be either a heavy-duty cup-type or radial vane design. Impellers shall be vortex type and fitted with full back pump-out vanes to restrict flow behind the impeller and shall be keyed to the shaft and secured by a shrouded securing bolt and lock washer.

Pumps with cup-type impellers shall have vanes and an integral rim forming a cup-type design, and shall have a minimum vane thickness of 7/8 inch for 3, 4 and 6 inch pumps and 1-1/8 inch for 8 inch pumps, and minimum rim thickness of 1/8 inch for 3 inch pumps, 1-5/8 inch for 4 inch pumps, and 1-3/4 inch for 6 and 8 inch pumps.

Pumps with radial vane type impellers shall have a minimum thickness at the front edge of the impeller vane of 0.2 inches for impeller diameters up to 8.5 inches, 0.5 inches for impeller diameters over 8.5 inches and up to 12 inches, and 0.625 inches for impeller diameters over 12 inches.

D. WEAR ELEMENT:

All wear elements shall be self centering, with jacking screws provided to facilitate removal. Pumps with cup-type impellers shall have a separate removable suction piece to absorb wear in the suction area, where this impeller directs abrasive material. The suction wear piece shall have a minimum thickness of 0.875 inch for a 3-inch pump, 1.25 inches for 4- and 6-inch pumps, and 1.3 inches for 8-inch pumps.

Pumps with radial vane type impellers shall be fitted with a rear casing wear plate and integral radial wear element, to protect the area behind and at the periphery of the impeller from the brunt of abrasive wear. The radial wear element shall be of a tapered design to promote flow of solids out of the impeller recess. Minimum thickness at the base of the radial wear element shall be 0.875 inch for impeller diameters up to 8 inches, 1.125 inches for impeller diameters over 8 inches and up to 11 inches, and 1.25 inches for impeller diameters over 11 inches. Minimum thickness at the tip of the radial wear element shall be 0.3 inch for impeller diameters up to 8 inches, 0.75 inch for impeller diameters over 8 inches and up to 11 inches, and 0.875 inch for impeller diameters over 11 inches.

E. SHAFT:

The shaft shall have a renewable hook type shaft sleeve. An O-ring shall be provided between the sleeve and shaft to prevent pumped fluid contacting the pump shaft.

F. STUFFING BOX:

The stuffing box shall be as specified in paragraph 11355-2.02 and 11000-2.04 C. Any leakage shall be retained by a drainable reservoir integral with the bearing housing. A 0.75 inch NPT hole will be provided to connect seal water drainage piping.

G. BEARING FRAME:

The bearing frame shall be fitted with a constant level sight glass oiler and vent and drain plugs for oil lubrication or grease nipples for grease lubrication.

Bearing life shall be rated for a minimum of 100,000 hours L_{10} life, based on calculated loads due to hydraulic thrust at the duty point, as well as other mechanical loading due to belt drives or shaft and impeller weight.

H. DRIVE UNITS:

Each pump shall be V-belt driven by a motor conforming to Section 11060 and paragraph 11355-1.01 D. Motor mounting and V-belt drive configuration shall be as shown on the drawings. The drive system shall include adjustable pitch sheaves with asymmetric V-belts, Becker Asymmetric Series type as manufactured by Hi-Lo Manufacturing. The adjustable pitch sheaves shall be selected to provide not less than ± 25 percent increase/decrease in the rated speed based upon the specified duty point. Guards conforming to OSHA requirements shall be provided.

I. BASEPLATE:

Baseplates shall conform to the requirements of Type I baseplates as specified in Section 11002.

J. CONTROLS:

Operation of the grit pumps shall be through the plant's Motor Control Center (MCC). Refer to the Electrical and Process and Instrumentation Drawings for specific details on the power and control system. Seal water supply shall be regulated via a solenoid valve interlocked with operation of the pumps via the plant control system.

K. COATINGS:

Coatings shall be in accordance with Section 09900.

2.04 SPARE PARTS

The following spare parts shall be provided for each size pump:

1 – set of all gaskets and O-rings
1 – shaft sleeve
2 – sets of packing
1 – lantern ring
1 – base ring

Spare parts shall be tagged and stored as specified in paragraph 11000-2.12.

2.05 PRODUCT DATA

The following information shall be provided in accordance with Section 01300:

1. Motor data as specified in section 11060-2.05.

2. Operation and maintenance information specified in Section 01730.

3. Electric motor manufacturer's standard overhaul instruction for motors 5 HP and larger.

4. Current mill certificates or test reports confirming hardness of casings, suction pieces, impellers, wear plates, radial wear elements and shaft sleeves being supplied on job.

5. Manufacturer's Installation Certification Form 11000-A as specified in Part 3.

6. Manufacturer's Instruction Certification Form 11000-B as specified in Part 3.

7. Field test results as specified in Part 3.

PART 3--EXECUTION

3.01 SHIPMENT AND STORAGE

Equipment shall be shipped and stored in accordance with Section 01605.

3.02 INSTALLATION

Preparation of equipment pads shall conform in all respects to the requirements of Section 11002. Motors and pumps shall be dismounted from the baseplates prior to grouting as required by section 11002. Each pump shall be aligned, connected, and installed in accordance with the manufacturer's instructions and the requirements of Section 11002. For all grit slurry pumping applications, sheaves shall be adjusted to vary the speed of each pump to provide the grit separator cyclone manufacturer's recommended best efficiency pressure at the cyclone at the rated flow rate specified in paragraph 11355-1.01C. The installation and initial operation of all components shall be certified on Form 11000-A as specified in Section 01999.

3.03 TESTING

Testing of equipment and systems shall be conducted in accordance with the requirements of Section 01660 and the following.

Provide a temporary, external pipe mounted flow meter to verify that the desired flow rate has been achieved for each pump. The flow meter shall be calibrated according to the

manufacturer's instructions prior to use. Verification shall be witnessed by the Engineer. Field test results shall be recorded and submitted as Product Data.

3.04 TRAINING

A minimum of 4 hours of training as specified in Section 01664 shall be provided. Training shall be certified on Form 11000-B specified in Section 01999.

END OF SECTION

SECTION 11360

ANSI HORIZONTAL, CONSTANT SPEED, END SUCTION, FRAME MOUNTED CENTRIFUGAL PUMPS

PART 1--GENERAL

1.01 DESCRIPTION

A. SCOPE:

This section specifies horizontal, end suction, frame mounted centrifugal pumps for pumping treated effluent from a wastewater treatment plant for reclaimed water usage. Pumps shall conform to ANSI/ASME B73.1. Equipment furnished under this section shall conform to the requirements of this section and Section 11050.

B. EQUIPMENT LIST:

Item	Equipment No.
Golf Course Reuse Water Pump 1	P-5131
Golf Course Reuse Water Pump 2	P-5132

C. PERFORMANCE REQUIREMENTS:

The fluid to be pumped is anticipated to range between 55 degrees F and 85 degrees F.

The pump shall perform in accordance with the following:

Equipment number	P-5131, 5132
Condition A[1, 3]	
Capacity, gpm	450
Total head, feet	22
Static head, feet	8
NPSHA, feet	42
Condition B[2, 3]	
Capacity, gpm	*from pump H/Q curve*
Total head, feet	14
Static head, feet	5
NPSHA, feet	45

NOTES:

1. Condition A shall be taken as the rated, continuous-duty operating condition. Performance at the rated condition shall be guaranteed in accordance with

tolerances set forth in the Test Standards of the Hydraulic Institute, except that any increase in head or capacity or both which results in a power requirement greater than the pump motor's nameplate rating will be cause for rejection.

2. Condition B is presented to indicate operating condi¬tions when the pump is operating against minimum anticipated system head, assuming a hypothetical head-capacity curve. Pumps with steeper head-capacity curves will produce less flow at this head. The reverse will occur with pumps having a shallower head-capacity curve.

3. Total head in the above tabulation is the algebraic difference between the discharge head and suction head as defined in the standards of the Hydraulic Institute. Net positive suction head available (NPSHA) in the above tabulation is referred to project elevation of 900' and is calculated in accordance with Hydraulic Institute standards for the worst combination of fluid temperature and barometric pressure.

D. DESIGN REQUIREMENTS:

1. GENERAL: The pump shall be specifically designed to pump treated effluent from a wastewater treatment plant (having passed through membrane and UV treatment processes) and shall operate without clogging or fouling caused by material in the pumped fluid at any operating condition within the range of service specified. The pump shall be designed to operate without cavitation and the motor and pump combination shall operate without vibration over the specified range of conditions. The pump head capacity curve shall slope in one continuous curve with no point of reverse slope inflection.

All components shall be designed to safely withstand forces resulting from flow reversals up to 125 percent of maximum speed within the pump during shutdowns caused by power failure.

The complete pumping unit shall be designed to operate without overload on any component at any point along the pump's entire operating curve.

2. CHARACTERISTICS: Equipment furnished under this section shall conform to the following:

Equipment Number	P-5131, 5132
Pump	
Minimum sphere, inches diameter, capable of passing through the pump from inlet to discharge	0.25
Efficiency at Condition A, minimum, percent[1]	70
Piping connection size, inches, minimum	
Suction	6
Discharge	4

Equipment Number	P-5131, 5132
Motor	
Speed, maximum, rpm	1800
Horsepower, maximum[2]	5
Type (Reference: Section 11060)	Type 2

NOTES:

1. Because the pumps are to operate at constant speed, the pump shall be selected so that the rated condition lies within 5 percent (based upon capacity) of the best efficiency point on the pump's head-capacity curve.
2. The motor shall be non-overloading within the selection criteria set forth in Section 11060. Pump selections which do not conform to this requirement without requiring a motor with a nameplate rating greater than that listed are not acceptable.

E. VIBRATION AND CRITICAL SPEEDS:

The pump shall comply with the requirements of Section 11050-1.04.

1.02 QUALITY ASSURANCE

A. REFERENCES:

This section contains references to the following documents. They are a part of this section as specified and modified. Where a referenced document contains references to other standards, those documents are included as references under this section as if referenced directly. In the event of conflict between the requirements of this section and those of the listed documents, the requirements of this section shall prevail.

Unless otherwise specified, references to documents shall mean the documents in effect at the time of Advertisement for Bids or Invitation to Bid (or on the effective date of the Agreement if there were no Bids). If referenced documents have been discontinued by the issuing organization, references to those documents shall mean the replacement documents issued or otherwise identified by that organization or, if there are no replacement documents, the last version of the document before it was discontinued. Where document dates are given in the following listing, references to those documents shall mean the specific document version associated with that date, regardless of whether the document has been superseded by a version with a later date, discontinued or replaced.

Reference	Title
ANSI/ASME B73.1M	Horizontal End Suction Centrifugal Pumps for Chemical Process
ASTM A48-REV A	Gray Iron Castings
ASTM A216/A216M	Steel Castings, Carbon, Suitable for Fusion Welding, for High Temperature Service

ASTM A395	Ferrite Ductile Iron Pressure Retaining Castings for Use at Elevated Temperatures
ASTM A536	Ductile Iron Castings
Hydraulic Institute Standards	Standards of the Hydraulic Institute, 14th Edition

B. FACTORY TESTS:

Factory tests will not be required. However, the manufacturer must be prepared to guarantee the performance specified under paragraph 11360-1.01 C.

1.03 SUBMITTALS

Submittals shall conform to the requirements of Section 11050. Sections to be marked-up and submitted in accordance with Section 11050 requirements include:

1. This Section
2. Section 11000 GENERAL REQUIREMENTS FOR EQUIPMENT
3. Section 11002 EQUIPMENT SUPPORTS, GROUTING AND INSTALLATION
4. Section 11005 MACHINE ALIGNMENT
5. Section 11050 GENERAL REQUIREMENTS FOR CENTRIFUGAL AND AXIAL FLOW PUMPING EQUIPMENT
6. Section 11060 ELECTRIC MOTORS

PART 2--PRODUCTS

2.01 ACCEPTABLE PRODUCTS

The Owner and Engineer believe the following manufacturers are capable of producing equipment and/or products, which will satisfy the requirements of this section. This statement, however, shall not be construed as an endorsement of a particular manufacturer's products, nor shall it be construed that named manufacturers' standard equipment or products will comply with the requirements of this section. Candidate manufacturers include Goulds Model 3196, Peerless 8196, Patterson, Flowserve-Durco Mark 3 or equal.

2.02 MATERIALS

Component	Material
Casing and nozzles	Ductile iron, ASTM A395, or cast iron, ASTM A48
Shaft	Steel, AISI 1045 or SAE 4140
Frame	Cast iron, ASTM A48
Impeller	Ductile iron, ASTM A536 or A395, cast iron, ASTM A48, or cast steel ASTM A216.

Materials specified are considered the minimum acceptable for the purposes of durability, strength, and resistance to erosion and corrosion. The Contractor may propose alternative materials for the purpose of providing greater strength or to meet required stress limitations. However, alternative materials must provide at least the same qualities as those specified for the purpose.

2.03 EQUIPMENT FEATURES

A. CASING AND BACK HEAD:

The casing shall be foot mounted and provided with bosses for suction and discharge gage connections and casing drain. The back head shall permit removal of the impeller, shaft and bearings without disturbing piping connections. The back head shall be provided with a “big bore” seal chamber to allow installation and ease of access to larger cartridge seals.

B. IMPELLER:

The pump impeller shall be open or reverse vane, single suction type and shall be screwed to the shaft and sealed with O ring. Pump shall be provided with external adjustment of impeller clearance.

C. SHAFT:

The shaft, where inside the stuffing box, shall have no reduction in size as specified in paragraph 11000-2.04 B.

D. MECHANICAL SEAL:

Single mechanical seals shall be provided as specified in paragraph 11000-2.04 B. Seal liquid shall be provided from a tap in the pump volute.

E. BEARINGS AND BEARING ISOLATORS:

Bearings and bearing isolators shall be provided as specified in paragraphs 11050-1.04.E.6 and 7.

F. MOTOR:

Pumps shall be driven by motors conforming to the requirements of Section 11060 and paragraph 11360-1.01 D.2.

G. BASEPLATE:

Each pump and motor shall be mounted on a common Type I or Type IV base as specified in paragraph 11002-2.03 or solid polymer concrete (Polybase) with similar material mounting blocks (Polybloc) with block lock and fastener support. Provide stainless steel drain pans and drain connections.

2.04 SPARE PARTS

For each size of pump, the following spare parts shall be provided:

1 set of all pump bearings
1 set of all pump gaskets
1 complete mechanical seal

Spare parts shall be tagged and stored as specified in paragraph 11000-2.12.

2.05 PRODUCT DATA

Product data shall conform to Section 11050.

PART 3--EXECUTION

3.01 INSTALLATION

Each pumping unit shall be aligned, connected and installed in accordance with the manufacturer's recommendations. The installation and trial operation shall be certified on Form 11000-A.

3.02 TESTING

Testing of equipment and systems shall be conducted in accordance with the requirements of Section 01660.

3.03 TRAINING

A minimum of 4 hours of training shall be provided by the pump manufacturer's service representative. Training shall conform to Section 01664 and shall be certified on Form 11000-B in Section 01999.

END OF SECTION

SECTION 11367

MULTISTAGE, CONSTANT SPEED, VERTICAL CENTRIFUGAL PUMPS

PART 1--GENERAL

1.01 DESCRIPTION

A. SCOPE:

This section specifies vertical multi-stage, constant speed centrifugal pumps for plant utility water service. Each pumping unit shall be complete with pump, drive unit, base, and all appurtenances to provide a complete pumping system.

The manufacturer shall review the mechanical and structural layout drawings to familiarize themselves with the location and the set-up of the equipment specified and shall assure themselves that the equipment specified is appropriate for and coordinated with what is shown on the contract drawings. The manufacturer shall also review the relevant electrical plan and one-line diagram and the relevant process and instrumentation diagram drawing to ensure that the contract drawings are appropriate and coordinated with the equipment and controls specified.

B. EQUIPMENT LIST:

Item	Equipment No.
Plant Water Pump 1	P-5133
Plant Water Pump 2	P-5134

C. PERFORMANCE REQUIREMENTS:

The pump shall be specifically designed to pump final effluent from a wastewater treatment having passed through a membrane bioreactor process followed by ultraviolet disinfection. The fluid to be pumped is anticipated to range between 35 degrees F and 70 degrees F and may be expected to contain up to 150 mg/L of solids consisting of small particles of sand, grit, and organics**.**

The pump will run at constant speed and be operated by a control system that will start the pumps based upon pressure set points in a separate hydro-pneumatic tank system connected to the plant water distribution system as shown on the Drawings. Refer to the control strategy specified in Section 17900.

D. OPERATING CONDITIONS:

The pump shall perform in accordance with the following:

Operating condition	P-5134, P-5135
Full Speed Operation	
Condition A[1, 5]	
Capacity, gpm	150
Total head, feet	223
NPSHA, feet	46
Condition B[2, 5]	
Capacity, gpm	*from pump H/Q curve*
Total head, feet	204
NPSHA, feet	44
Condition C[3, 5]	
Capacity, gpm	*from pump H/Q curve*
Total head, feet	242
NPSHA, feet	43

NOTES:

5. Condition A shall be taken as the rated operating condition. Performance at the rated condition shall be guaranteed in accordance with Section 11050. Condition A has been selected to obtain the rated pumping capacity for the installation. It is not intended that the pumps be selected for maximum efficiency at Condition A. Pumps furnished under this section should be selected to achieve Condition A performance, but also operate continuously without objectionable vibration or cavitation at the head specified under Condition B. Condition A may be located in the Allowable Operating Region as established by the pump manufacturer in accordance with ANSI/HI 9.6.3 and published in the manufacturer's published application data for the specific model proposed for this application. However, if Condition A is located in the AOR, the limiting suction specific speed for the pump selection will change (refer to paragraph 11347-1.01 F.

6. Condition B head is presented to indicate operating conditions when the pump is operating against minimum anticipated system head, assuming a hypothetical head-capacity curve. **Condition B shall be used for pump selection**. **Condition B shall be located within the Preferred Operating Region as established by the pump manufacturer in accordance with ANSI/HI 9.6.3 and listed in the manufacturer's published application data for the specific model proposed for this application.** Pumps with head-capacity curves steeper than that assumed will produce somewhat less flow at somewhat lower head. The reverse will occur with pumps having a shallower head-capacity curve.

7. Condition C head is presented to indicate operating conditions when the pump is operating against maximum anticipated system head, assuming a hypothetical head-capacity curve. **Condition C shall be located within the Acceptable Operating Region as established by the pump manufacturer in accordance with ANSI/HI 9.6.3 and listed in the manufacturer's published application data for the**

specific model proposed for this application. Pumps with head-capacity curves steeper than that assumed will produce somewhat less flow at somewhat lower head. The reverse will occur with pumps having a shallower head-capacity curve.

8. Total head in the above tabulation is the algebraic difference between the discharge head and suction head as defined in ANSI/HI 1.1 – 1.6. Net positive suction head available (NPSHA) in the above tabulation is referred to the wetwell invert as shown and is calculated in accordance with ANSI/HI 1.3 for average barometric pressure and maximum temperature conditions. An allowance of five feet has been included for the presence of volatile constituents in the pumped fluid. NPSHA at the pump impeller eye can be determined by adjusting the given value by proposed pump dimensions and the indicated requirements for pump installation details. ***It is the Contractor's responsibility to make this adjustment and produce calculations justifying the proposed selection.*** Required NPSHA margin shall be as specified in Section 11050.

E. DESIGN REQUIREMENTS:

1. GENERAL: The pump shall be designed to operate without damaging cavitation and the motor and pump combination shall operate without vibration over the specified range of conditions. The pump head capacity curve shall slope in one continuous curve with no point of reverse slope inflection. All components shall be designed to safely withstand forces resulting from flow reversals, up to 125 percent of maximum speed, within the pump during shutdowns caused by power failure. The complete pumping unit shall be designed to operate without overload on any component at any point along the pump's entire operating curve without using the motor's service factor.

2. CHARACTERISTICS: Equipment furnished under this section shall conform to the following:

Item	P-5134, P-5135
Pump	
Minimum sphere, inches diameter, capable of passing through the pump from inlet to discharge	1
Maximum efficiency at maximum speed, minimum, percent[a]	68
Piping connection size, inches, minimum	
Inlet	2
Discharge	2
Operating speed, rpm, maximum	3600
Motor	
Motor horsepower, maximum	15
Motor type	Type 2

[a] The maximum efficiency is the minimum acceptable peak efficiency and is not required to coincide with any specified operating condition in paragraph 11318-1.01 E. Pump efficiency shall be as defined in Section 11050.

F. VIBRATION AND CRITICAL SPEEDS:

The pump shall comply with the requirements of Section 11020.

1.02 QUALITY ASSURANCE

A. REFERENCES:

This section contains references to the following documents. They are a part of this section as specified and modified. Where a referenced document contains references to other standards, those documents are included as references under this section as if referenced directly. In the event of conflict between the requirements of this section and those of the listed documents, the requirements of this section shall prevail.

Unless otherwise specified, references to documents shall mean the documents in effect at the time of Advertisement for Bids or Invitation to Bid (or on the effective date of the Agreement if there were no Bids). If referenced documents have been discontinued by the issuing organization, references to those documents shall mean the replacement documents issued or otherwise identified by that organization or, if there are no replacement documents, the last version of the document before it was discontinued. Where document dates are given in the following listing, references to those documents shall mean the specific document version associated with that date, regardless of whether the document has been superseded by a version with a later date, discontinued or replaced.

Reference	Title
ABMA 9	Load Ratings and Fatigue Life for Ball Bearings
ABMA 11	Load Ratings and Fatigue Life for Roller Bearings
ASTM A48	Gray Iron Castings
ASTM A108	Steel Bars, Carbon, Cold Finished, Standard Quality
ASTM A276	Stainless and Heat-Resisting Steel Bars and Shapes
ASTM A278	Gray Iron Castings for Pressure Containing Parts for Temperatures of up to 650 Degrees F
ASTM A322	Steel Bars, Alloy, Standard Grades
ASTM A576	Steel Bars, Carbon, Hot Wrought, Special Quality
ASTM A743/A743M	Castings, Iron-Chromium, Iron-Chromium-Nickel, Corrosion-Resistance for General Application.
Hydraulic Institute Standards	Standards of the Hydraulic Institute 14th Edition

Materials specified are considered the minimum acceptable for the purposes of durability, strength, and resistance to erosion and corrosion. The Contractor may propose alternative materials for the purpose of providing greater strength or to meet required stress limitations. However, alternative materials must provide at least the same qualities as those specified for the purpose.

B. FACTORY TESTS:

Factory tests will not be required. However, the manufacturer shall guarantee the performance specified under paragraph 11367-1.01 D, Condition A.

C. UNIT RESPONSIBILITY:

The Contractor shall assign unit responsibility as specified in paragraph 11000-1.02 C to the pump manufacturer for the equipment specified in this section. A certificate of unit responsibility shall be provided.

1.03 SUBMITTALS

The following information shall be submitted in accordance with Section 01300:

1. A copy of this specification section, with addendum updates included, and all referenced and applicable sections, with addendum updates included, with each paragraph check-marked to indicate specification compliance or marked to indicate requested deviations from specification requirements. Check marks (✓) shall denote full compliance with a paragraph as a whole. If deviations from the specifications are indicated, and therefore requested by the Contractor, each deviation shall be underlined and denoted by a number in the margin to the right of the identified paragraph, referenced to a detailed written explanation of the reasons for requesting the deviation. The Engineer shall be the final authority for determining acceptability of requested deviations. The remaining portions of the paragraph not underlined will signify compliance on the part of the Contractor with the specifications. *Failure to include a copy of the marked-up specification sections, along with justification(s) for any requested deviations to the specification requirements, with the submittal shall be sufficient cause for rejection of the entire submittal with no further consideration.*

2. A copy of the contract document control diagrams and process and instrumentation diagrams relating to the submitted equipment, with addendum updates that apply to the equipment in this section, marked to show specific changes necessary for the equipment proposed in the submittal. If no changes are required, the drawing or drawings shall be marked *"no changes required"*. *Failure to include copies of the relevant drawings with the submittal shall be cause for rejection of the entire submittal with no further review.*

3. Certificate of Unit Responsibility attesting that the Contractor has assigned, and that the manufacturer accepts, unit responsibility in accordance with the requirements of this Section and paragraph 11000-1.02 C. *No other submittal material will be reviewed until the certificate has been received and found to be in conformance with these requirements.*

4. Predicted pump performance curves showing head, capacity, speed, power, efficiency and NPSH required on the ordinate plotted against capacity on the abscissa.

5. Motor submittal information as specified in paragraph 11060-1.03.

6. Drawings showing general dimensions and confirming pump piping connections, construction details including dimensions and materials of construction, and wiring diagrams.

7. Manufacturer's catalog data, showing materials of construction and including a list of spare parts to be provided.

PART 2--PRODUCTS

2.01 ACCEPTABLE PRODUCTS

The Owner and Engineer believe the following candidate manufacturers are capable of producing equipment and/or products that will satisfy the requirements of this section. This statement, however, shall not be construed as an endorsement of a particular manufacturer's products, nor shall it be construed that named manufacturers' standard equipment or products will comply with the requirements of this section. Candidate manufacturers include Bell and Gossett, Grundfos, Peerless, Berkeley, or approved equal.

2.02 MATERIALS

Materials of construction shall be as follows:

Component	Material
Suction/discharge base, pump head, flanges and couplings	Cast iron
Motor stool	Cast iron
Shaft	Stainless steel, Type 316
Impellers	Stainless steel, Type 304 or 316
Wearing rings	Teflon
Intermediate bearings	Aluminum Oxide Ceramic or Bronze
Bottom bearing rings, shaft journal	Tungsten carbide, replaceable

Component	Material
Cartridge shaft seal	Per manufacturer, corrosion resistant, replaceable without disassembling pump (EPDM (std), Viton, or Buna O-rings)
Motor seal	Per manufacturer, replaceable without removing motor

Materials specified are considered the minimum acceptable for the purposes of durability, strength, and resistance to erosion and corrosion. The Contractor may propose alternative materials for the purpose of providing greater strength or to meet required stress limitations. However, alternative materials must provide at least the same qualities as those specified for the purpose.

2.03 EQUIPMENT FEATURES

A. CASING:

The casing shall be foot mounted and provided with bosses for suction and discharge gage connections and casing drain. Casing shall be free from holes, pockets or other defects and flow passages shall be smooth to provide maximum efficiency. The casing shall be design for a hydrostatic test pressure equal to 150% of the pump's full speed shut-off head.

B. IMPELLERS AND DIFFUSERS:

The impellers and diffusers shall be of the enclosed single suction type, hydraulically balanced to minimize axial thrust loads. Each impeller shall be locked in place with splined holes to the shaft.

C. SHAFT:

The shaft, where inside the stuffing box, shall have no reduction in size as specified in paragraph 11000-2.04 B.

D. MECHANICAL SEAL:

Single mechanical seals shall be provided as specified in paragraph 11000-2.04 B. Seal liquid shall be provided from a tap on the pump discharge.

E. BEARINGS AND BEARING ISOLATORS:

Bearings and bearing isolators shall be provided as specified in paragraphs 11050-1.04.E.6 and 7.

F. MOTOR:

The pump shall be driven by a vertical solid-shaft motor conforming to paragraph 11367-1.01 F, Section 11060, and the requirements of Section 11050.

G. BASEPLATE:

Each pump and motor shall be mounted on a common Type I or Type IV base as specified in paragraph 11002-2.03 or solid polymer concrete (Polybase) with similar material mounting blocks (Polybloc) with block lock and fastener support. Provide stainless steel drain pans and drain connections.

2.04 SPARE PARTS

The following spare parts shall be provided if one pump is furnished under this section. If more than one pump is furnished, the following shall be provided for each pair of pumps.

- 3 sets of all gaskets
- l set of pump bearings
- 1 set of wearing rings
- 1 set of seals, including shaft seal

Spare parts shall be tagged and stored as specified in paragraph 11000-2.12.

2.05 PRODUCT DATA

The following information shall be provided in accordance with Section 01300:

1. Guaranteed pump performance curves.

2. Applicable operation and maintenance information specified in Section 01730.

3. Certification that the pumping units will meet the vibration and critical speed limitations as specified in Section 11020.

4. Installation Certification Form 11000-A as specified in paragraph 11367-3.01.

5. Motor product data as specified in paragraph 11060-2.05.

6. Training Certification Form 11000-B as specified in paragraph 11367-3.03.

PART 3--EXECUTION

3.01 INSTALLATION

Each pumping unit shall be aligned, connected, and installed in accordance with the manufacturer's recommendations. The installation shall be certified on Form 11000-A as specified in Section 01999.

3.02 TESTING

After completion of installation, each pumping unit shall be field tested to demonstrate compliance with the performance requirements as specified.

3.03 TRAINING

A minimum of 4 hours of training shall be provided by the pump manufacturer's service representative. Training shall conform to Section 01664 and shall be certified on Form 11000-B as specified in Section 01999.

END OF SECTION

SECTION 11381

PERISTALTIC CHEMICAL METERING PUMPS

PART 1--GENERAL

1.01 DESCRIPTION

A. SCOPE:

This section specifies chemical hose pumps and appurtenances for feeding liquid solutions of sodium hypochlorite, acetic acid, ferric chloride, and sodium hydroxide. Citric acid chemical feed pumps shall be provided by the Membrane System Supplier (MSS). See specification section 11300 for details.

The manufacturer shall furnish complete metering pumps and accessory systems to operate as intended by these specifications.

The manufacturer shall review the mechanical and structural layout drawings to familiarize themselves with the location and the set-up of the equipment specified and shall assure themselves that the equipment specified is appropriate for and coordinated with what is shown on the contract drawings. The manufacturer shall also review the relevant electrical plan and one-line diagram and the relevant process and instrumentation diagram drawing to ensure that the contract drawings are appropriate and coordinated with the equipment and controls specified.

B. TYPE:

The metering pumps shall be of the positive displacement, peristaltic type utilizing a flexible tube and spring loaded roller or track. The pump shall be suitable for metering service, with an electronic variable speed drive to control the dosage with accuracy of one percent variation from the pump setting. Each pumping unit shall be complete with pump, remotely mounted drive unit, base, and all appurtenances to provide a complete pumping system for the specific process fluids and design characteristics as specified herein.

C. EQUIPMENT LIST:

Item	Equipment No.
Sodium Hypochlorite Pump 1	P-5231
Sodium Hypochlorite Pump 2	P-5232
Acetic Acid Pump 1	P-5221
Acetic Acid Pump 2	P-5222
Ferric Chloride Pump 1	P-5251
Ferric Chloride Pump 2	P-5252
Sodium Hydroxide Pump 1	P-5211

Item	Equipment No.
Sodium Hydroxide Pump 2	P-5212
Sodium Hydroxide Pump 3	P-5213

D. PERFORMANCE AND DESIGN REQUIREMENTS:

Pump (Each)	P-5231	P-5232	P-5221 P-5222	P-5251 P-5252	P-5211 P-5212 P-5213
Chemical being pumped	Sodium Hypochlorite	Sodium Hypochlorite	Acetic Acid	Ferric Chloride	Sodium Hydroxide
Discharge capacity-avg, gph	30	1.2	4.2	12.5	20.8
Discharge capacity-peak, gph	160	4.4	15.3	45.5	75.7
Maximum discharge pressure, psi	100	100	100	100	100
No. of Pumps (Duty + Standby)	1 (1+0)	1 (1+0)	2 (1+1)	2 (1+1)	3 (1+1)
Operation	Intermittent	Intermittent	Constant	Constant	Intermittent
Flow Rate	Variable	Variable	Variable	Variable	Variable

Motor	P-5233	P-5231	P-5221 P-5222	P-5251 P-5252	P-5211 P-5212 P-5213
Speed, rpm (maximum)	7	80	25	70	60
Maximum Power Consumption, hp	3/4	3/4	3/4	3/4	3/4
Motor Type	Inverter Duty, Gear	Inverter Duty, Gear	Inverter Duty, Gear	Inverter Duty, Gear	Inverter Duty, Gear
Enclosure	TEFC	TEFC	TEFC	TEFC	TEFC
Voltage	240	240	240	240	240

E. SERVICE CONDITIONS:

Chemicals to be pumped by the equipment under this section shall have the characteristics as noted:

Sodium Hypochlorite	
Solution concentration, percent	12.5
Specific gravity	1.21
Liquid temperature, degrees F	Ambient

Acetic Acid	
Solution concentration, percent	56
Specific gravity	1.05
Liquid temperature, degrees F	Ambient

Ferric Chloride	
Solution concentration, percent	33
Specific gravity	1.42
Liquid temperature, degrees F	Ambient

Sodium Hydroxide	
Solution concentration, percent	20
Specific gravity	1.25
Liquid temperature, degrees F	Ambient

F. ENVIRONMENTAL CONDITIONS:

The pumping units specified in this section shall be designed for outdoor operation in a corrosive environment located at a wastewater treatment plant near Woodstock, Georgia. Environmental conditions are specified in Section 01800.

1.02 QUALITY ASSURANCE

A. GENERAL:

The metering pumps and appurtenances manufacturer shall be regularly engaged in the business of designing, building and repairing pumps of the type specified in this section. All pumps and appurtenances furnished for this contract shall be supplied by the same manufacturer. The supplier shall take responsibility for ensuring the proper components are incorporated in the package.

B. REFERENCES:

This section contains references to the following documents. They are a part of this section as specified and modified. In case of conflict between the requirements of this section and those of the listed documents, the requirements of this section shall prevail.

Unless otherwise specified, references to documents shall mean the documents in effect at the time of Advertisement for Bids or Invitation to Bid (or on the effective date of the Agreement if there were no Bids). If referenced documents have been discontinued by the issuing organization, references to those documents shall mean the replacement documents issued or otherwise identified by that organization or, if there are no replacement documents, the last version of the document before it was discontinued. Where document dates are given in the following listing, references to those documents shall mean the specific document version associated with that date, whether or not the document has been superseded by a version with a later date, discontinued or replaced.

Reference	Title
API	American Pump Institute
ANSI-HI	American National Standards Institute - Hydraulic Institute
NEMA	National Electric Manufacturers Association

C. SUBMITTALS:

The following submittals shall be provided as specified in Section 01300:

1. A copy of this specification section, with addendum updates included, and all referenced and applicable sections, with addendum updates included, with each paragraph check-marked to indicate specification compliance or marked to indicate requested deviations from specification requirements. Check marks (✓) shall denote full compliance with a paragraph as a whole. If deviations from the specifications are indicated and, therefore requested by the Contractor, each deviation shall be underlined and denoted by a number in the margin to the right of the identified paragraph. The remaining portions of the paragraph not underlined will signify compliance on the part of the Contractor with the specifications. The submittal shall be accompanied by a detailed, written justification for each deviation. *Failure to include a copy of the marked-up specification sections, along with justification(s) for any requested deviations to the specification requirements, with the submittal shall be sufficient cause for rejection of the entire submittal with no further consideration.*

2. A copy of the contract document control diagrams and process and instrumentation diagrams relating to the submitted equipment, with addendum updates that apply to the equipment in this section, marked to show specific changes necessary for the equipment proposed in the submittal. If no changes are required, the drawing or drawings shall be marked "no changes required". *Failure to include copies of the relevant drawings with the submittal shall be cause for rejection of the entire submittal with no further review.*

3. Shop drawings with complete dimensions and mounting details for the pumps.

4. Catalog data and information including:

   a. Maximum and minimum capacity using adjustable speed drive, gpm; maximum and minimum operating speed, rpm; and discharge pressure.
   b. Motor and adjustable speed drive type.

5. Materials of construction.

6. Net positive suction head required.

7. Manufacturer's wiring diagram.

8. Manufacturer's catalog data on all accessories including pressure regulating valves, pressure relief valves, flow calibration chambers, and suction assemblies.

9. A copy of all related contract schematic, structural, and mechanical drawings with all piping, foundations, supports, and layout sizes and dimensions requiring Contractor confirmation marked.

10. Control panel layout drawings indicating the front door and rear panel equipment arrangement and dimensions.

11. Electrical elementary diagrams, internal connection diagrams, and external interconnection diagrams, drawn in accordance with JIC and/or ICS standards. Connection diagrams shall be the conventional type with lines showing point-to-point wiring and must show terminals and devices as viewed by the electrician; wireless or wire schedule types are not acceptable.

1.03 SHIPMENT AND STORAGE

Equipment shipment, protection and storage shall conform to the requirements of Section 01605.

1.04 FACTORY TESTING

Factory tests shall be performed by the manufacturer prior to delivery in order to verify accuracy and performance of the systems as specified. Factory tests need not be witnessed by the Engineer. However, factory tests and their results shall be performed by the manufacturer. The manufacturer shall certify and provide copies of the tests and guarantee the equipment’s performance specified in this section. All certifications of factory tests shall be submitted and approved by the Engineer before shipping equipment.

PART 2--PRODUCTS

2.01 MANUFACTURERS

The Owner and Engineer believe the following manufacturers are capable of producing equipment and/or products that will satisfy the requirements of this Section. This statement, however, shall not be construed as an endorsement of a particular manufacturer's product, nor shall it be construed that a named manufacturer's standard product will comply with the requirements of this Section. Manufacturers include the following, or approved equal:

1. Watson Marlow
2. Blackmer

2.02 GENERAL

The manufacturer shall furnish all meter pump system equipment to complete a properly functioning, integrated package as intended by these specifications. The system shall be factory-assembled to the maximum extent practical. Factory assembly shall include all pumps, motors, bases, drives, and appurtenant valves and fittings. Any component parts not pre-assembled due to packaging and shipping concerns shall be identified and clearly labeled. No field welding will be allowed.

All materials used for the metering pumps and accessories shall be designed by the manufacturer to have the necessary strength, stability and stiffness for the intended service. All connections, foundation bolts, plates, nuts, washers and clamps shall be corrosion resistant to the conditions of use.

2.03 MATERIALS

The peristaltic metering pumps shall be manufactured of the following materials:

Equipment Number	P-5211, P-5212, P-5213, P-5221, P5222, P-5231, P-5232, P-5233, P-5251, P-5252
Case	Cast Iron
Track	Polyphenelene sulfide
Rollers	316 stainless steel
Bearings	316 stainless steel with PTFE seals
Drive shaft	Nickel plated steel

Materials specified are considered the minimum acceptable for the purposes of durability, strength, and resistance to erosion and corrosion. The Contractor may propose alternative materials for the purpose of providing greater strength or to meet required stress limitations. However, alternative materials must provide at least the same qualities as those specified.

2.04 EQUIPMENT

A. PUMP AND DRIVE MECHANISM:

Pumps shall be of the positive displacement peristaltic type utilizing a flexible tube. The tubing shall be in contact with the inside diameter of the track (housing) and be held in place on the suction and discharge by a hand adjustable clamp mechanism. Tube clamps requiring tools are not acceptable. Suction and discharge shall be on the same side of the pump head. The tubing shall be replaceable with no disassembly of the pump head and without the use of tools. Each pump shall consist of track/pump head cover with safety interlock switch, screw down retainer mechanism, roller rotor assembly with remotely mounted variable speed drive. The magnetic interlock switch shall render the drive inoperable when opened. The pump head shall be easily secured to the drive and be self locating.

Each pump shall be capable of self priming when completely dry with a suction lift capability of up to 30 feet of water. The pump shall be capable of running dry without damaging effects to the pump or tubing. The pump shall require no check valves or diaphragms and shall not require any dynamic seals in contact with the process fluid. The process fluid shall only be in contact with the inside of the pump tubing.

Pumps shall be configured to conform to space constraints as shown in the Contract Drawings.

B. TUBING:

The manufacturer shall furnish the appropriate hose material suitable for the conditions and fluid in each application (e.g., extruded Marprene, Neoprene, Silicone, PVC, or Viton). The tubing shall be of 64 shore A durometer.

Pump tubing diameter may vary for different drive sizes. For drive speeds ranging from 10 to 360 rpm, the pump must accept tubing with a wall thickness of 3/16 inch and an inside diameter ranging from of 3/4 inch to 1 inch. For drive speeds ranging from 5 to 265 rpm, the pump must accept a wall thickness of 1/8 inch and a variation in inside diameter ranging from 1/2 inch to 5/8 inch. For drive speeds ranging from 10 to 220 rpm, the pump must accept tubing with an inside diameter of 1/8 inch.

C. ROTOR ASSEMBLY AND TRACK:

The rotor assembly shall be equipped with two or four self lubricating geared compression rollers mounted on spring loaded arms. Rotor material of construction shall be as specified in paragraph 11381-2.03. Compression rollers shall be symmetrical about the rotor for compression of the hose against the track. The track material shall be as specified in paragraph 11381-2.03. One roller shall at all times be fully engaged with the tubing providing complete compression to prevent back flow or siphoning. The pumping action shall be created by the occlusion of the pump hose and its subsequent restitution causing a vacuum effect to draw the fluid into the suction side of the hose. Hose occlusion shall be adjustable with a lead screw, which limits the travel of the spring, loaded roller.

D. PIPING CONNECTION:

Adapters and connective fittings between the flexible tubing and the fixed piping shown on the Contract Drawings shall be provided by the manufacturer for each tube size that is compatible with each pump.

2.05 DRIVE UNIT AND CONTROLS

A. ADJUSTABLE SPEED DRIVE:

Pumps will be controlled by a remotely mounted VFD located in the MCC. Pump supplier to coordinate with MCC manufacturer. The pump shall be driven by variable frequency drives specified in Section 16920 for MCC mounted VFDs. Variable frequency drives shall be provided separately by the Contractor and shall be furnished with circuitry to interface with the motor leak protection systems. Where proprietary or special equipment protection devices are required for mounting in the VFD enclosure the pump manufacturer shall supply such devices to the VFD manufacturer for integration into the VFD controls circuitry.

B. MOTORS:

Drive shall be rated for continuous 24-hour operation. Pumps shall have non-maintained maximum speed switches for purpose of priming. Pump drives shall be close coupled and self aligning, requiring no flexible couplings. Each pump shall be capable of operating with a range of hose/tubing diameters and thicknesses which may vary depending on the drive size of the pump.

2.06 INLET SUCTION ACCUMULATORS AND DISCHARGE PULSATION DAMPENERS

The inlet suction accumulators and discharge pulsation dampeners shall be supplied and constructed of materials shown to be fully compatible with the fluids be pumped. The minimum volume of the accumulators/dampeners shall be sufficient to remove a minim of 90% of the pulsation. Suction accumulators and pulsation dampeners shall be provided with a pressure gauge with an operating range of 0-100 PSIG. Accumulators / Dampeners shall be manufactured by Blacoh or equal. The dampeners shall be provided with FNPT ports on sizes 2” or less and ANSI Class 150 flanges for sizes great than 2”

2.07 LEAK DETECTION (ALL PUMPS)

Provide each pump with an over-pressure/hose burst device above the normal lubricant level to high pressure and detect leakage of pumped product into the pump housing for indication of hose failure. Device shall be capacitive proximity type and have a 24VDC rated to monitor high and low fluid levels. Where proprietary or special equipment protection devices are required for mounting in the VFD enclosure, the pump manufacturer shall supply such devices to the VFD manufacturer for integration into the VFD controls circuitry. The pump supplier shall review controls systems provided by MCC suppliers for coordination.

2.08 ACCESSORIES

The following accessories shall be provided by the manufacturer.

A. CALIBRATION CHAMBER:

The calibration chamber shall be of clear PVC construction, graduated in milliliters. Chambers shall be sized to allow the pump to withdraw the total contents in the column in approximately 2 minutes.

B. (NOT USED)

2.09 PRODUCT DATA

The following product data shall be provided in accordance with Section 01300.

1. Applicable operation and maintenance information as specified in Section 01730.

2. Manufacturer's recommendations for installation.

3. Factory test results as specified in paragraph 11381-1.04.

4. Installation Certification Form 11000-A as specified in paragraph 11381-3.01.

5. Training Certification Form 01660-B as specified in paragraph 11381-3.03.

2.10 SPARE PARTS AND SPECIAL TOOLS

Spare parts shall be provided. Spare parts shall include:

1. 2 sets of spare houses per pump

2. 4 pair element connectors per pump

PART 3--EXECUTION

3.01 INSTALLATION

Each pump shall be aligned, connected, and installed in accordance with the manufacturer's instructions. The installation and initial operation of all components shall be certified on Form 11000-A as specified in Section 01999.

3.02 START-UP AND TESTING

Testing of equipment and systems shall be conducted in accordance with the requirements of Section 01660.

3.03 TRAINING

The Contractor shall provide the services of a factory-trained manufacturer's representative to provide not less than 4 hours of training on the pumps and chemical feed systems provided. Training shall be certified on Form 11000-B specified in Section 01999.

END OF SECTION

SECTION 11436

TWO-STAGE, BELT-DRIVEN, AIR-COOLED, TANK-MOUNTED AIR COMPRESSOR SYSTEMS

PART 1--GENERAL

1.01 DESCRIPTION

A. SCOPE:

This section specifies a two-stage reciprocating air compressor, receiver and fiberglass sound attenuating enclosure suitable for use with a hydropneumatic tank system for plant water service at a wastewater treatment plant. The general requirements applicable to all mechanical equipment, as specified in Section 11000-1.01 A., are applicable to the equipment specified in this section.

The manufacturer shall review the mechanical layout drawings to familiarize themselves with the various locations, applications and the set-up of the equipment specified and shall assure themselves that the equipment specified is appropriate for and coordinated with what is shown on the contract drawings. The manufacturer shall also review the relevant electrical plan and one-line diagram and the relevant process and instrumentation diagram drawing to ensure that the contract drawings are appropriate and coordinated with the equipment and controls specified

B. TYPE:

The compressor shall be of the two-stage, air-cooled, belt-driven reciprocating type, assembled in a self-contained unit consisting of the compressors, motors, V-belt drives, and regulators, all mounted on a common ASME Coded national Board air receiver. Suitable piping between compressor, control, and receiver shall be provided. The compressor system shall be provided with a sound attenuating enclosure to fully enclose the compressor system, suitable for installation outdoors on a concrete slab.

C. EQUIPMENT LIST:

Item	Equipment No.
Air Compressor 1	CP-5141
Air Compressor 2	CP-5142
Service Air Receiver	REC-5140
Compressed Air Control Panel	VCP-5141
Sound Attenuating Enclosure	MME-5142

D. DESIGN REQUIREMENTS:

The air-cooled compressor and accessories shall be designed and selected for continuous duty operation and shall deliver air which at all times meets operating requirements listed in paragraph 1.01 E. of this section.

E. OPERATING REQUIREMENTS AND CHARACTERISTICS:

The compressors shall meet the following requirements:

	CP 5141, 5142
Inlet pressure, psig	14.3
Maximum working pressure, psig	150
Discharge pressure, psig	125
Maximum rated motor, horsepower	5
Minimum capacity at rated discharge pressure, scfm	15

1.02 QUALITY ASSURANCE

A. REFERENCES:

This section contains references to the following documents. They are a part of this section as specified and modified. Where a referenced document contains references to other standards, those documents are included as references under this section as if referenced directly. In the event of conflict between the requirements of this section and those of the listed documents, the requirements of this section shall prevail.

Unless otherwise specified, references to documents shall mean the documents in effect at the time of Advertisement for Bids or Invitation to Bid (or on the effective date of the Agreement if there were no Bids). If referenced documents have been discontinued by the issuing organization, references to those documents shall mean the replacement documents issued or otherwise identified by that organization or, if there are no replacement documents, the last version of the document before it was discontinued. Where document dates are given in the following listing, references to those documents shall mean the specific document version associated with that date, regardless of whether the document has been superseded by a version with a later date, discontinued or replaced.

Reference	Title
ASME	Heat Exchanger Code

B. UNIT RESPONSIBILITY:

The Contractor shall assign unit responsibility as specified in paragraph 11000-1.02C to the supplier of the fabricated slide gates for all equipment specified in this section. A certificate of unit responsibility shall be provided.

C. VIBRATION AND CRITICAL SPEED LIMITATIONS:

The equipment shall conform to the requirements specified in Section 11020.

D. SHIPMENT PROTECTION AND STORAGE:

Equipment shipment, protection, and storage shall conform to the requirements specified in Section 01605.

1.03 ENVIRONMENTAL CONDITIONS

The compressor will be installed outdoors in a prefabricated sound attenuating enclosure. Refer to Section 01800 for site environmental conditions.

1.04 SUBMITTALS

The following submittals shall be provided as specified in Section 01300.

1. A copy of this specification section, with addendum updates included, and all referenced and applicable sections, with addendum updates included, with each paragraph check-marked to indicate specification compliance or marked to indicate requested deviations from specification requirements. Check marks (✓) shall denote full compliance with a paragraph as a whole. If deviations from the specifications are indicated, and therefore requested by the Contractor, each deviation shall be underlined and denoted by a number in the margin to the right of the identified paragraph, referenced to a detailed written explanation of the reasons for requesting the deviation. The Engineer shall be the final authority for determining acceptability of requested deviations. The remaining portions of the paragraph not underlined will signify compliance on the part of the Contractor with the specifications. *Failure to include a copy of the marked-up specification sections, along with justification(s) for any requested deviations to the specification requirements, with the submittal shall be sufficient cause for rejection of the entire submittal with no further consideration.*

2. A copy of the contract document control diagrams, process and instrumentation diagrams and mechanical layout drawings relating to the submitted equipment, with addendum updates that apply to the equipment in this section, marked to show specific changes necessary for the equipment proposed in the submittal. If no changes are required, the drawing or drawings shall be marked "no changes required". *Failure to include copies of the relevant drawings with the submittal shall be cause for rejection of the entire submittal with no further review.*

3. Certificate of Unit Responsibility attesting that the Contractor has assigned unit responsibility in accordance with the requirements of this section and paragraph 11000-1.02 C. *No other submittal material will be reviewed until the certificate has been received and found to be in conformance with these requirements.*

4. Compressor system manufacturer and manufacturer's type designation.

5. Manufacturer's catalog data including dimensioned drawings and weight of each component.

6. Manufacturer’s data for sound attenuating enclosure including dimensioned plan and section views, materials of constructions, specifications for insulation, doors, lighting, fans, louvers, lighting, electrical equipment and all other appurtenances.

7. Predicted performance curves developed for the specific application, including speed, capacity, pressure, power and efficiency as applicable.

8. Motor data form 11060-A per Section 11060.

9. Control panel layout, front elevation and schematic wiring diagram.

PART 2--PRODUCTS

2.01 ACCEPTABLE PRODUCTS

The Owner and Engineer believe the following candidate manufacturers are capable of producing equipment and/or products that will satisfy the requirements of this Section. This statement, however, shall not be construed as an endorsement of a particular manufacturer’s products, nor shall it be construed that named manufacturers’ standard equipment or products will comply with the requirements of this Section. Candidate manufacturers include Quincy, Ingersoll Rand or equal, modified as necessary to provide the specified features and to meet specified operating requirements.

2.02 MATERIALS

Materials of components shall be as follows:

Component	Material
Piston rings	Steel
Cylinders and counterweights	Cast iron, ASTM, Class 30B
Low pressure piston	Aluminum alloy, AISI S-132

Component	Material
High pressure piston and heads	Cast iron or cast aluminum
Crankshaft	Forged Steel
Connecting rods	Forged Steel
Frame, intercooler, and manifolds	Cast iron, ASTM A48, Class 20A
Baseplates	Fabricated steel
Valves	Type 316 stainless steel
Intercooler piping	Copper

Materials specified are considered the minimum acceptable for the purposes of durability, strength, and resistance to erosion and corrosion. The Contractor may propose alternative materials for the purpose of providing greater strength or to meet required stress limitations. However, alternative materials must provide at least the same qualities as those specified for the purpose, as determined by the Engineer.

2.03 EQUIPMENT FEATURES

A. COMPRESSOR:

1. GENERAL: The compressor shall be either V-configuration or vertical two-stage type, with deep-ribbed construction for efficient heat dissipation. Valves shall be readily accessible. Connecting rods shall be of forged steel with babbit-lined crankpin bearings. The crankshaft shall be a balanced, single steel forging. Crankshaft bearings shall be Class M3, (50,000 hr) designed for the radial and thrust loads imposed by the operating conditions specified. Lubrication shall be splash or pressure type. The interstage cooler shall be finned and of copper multitube construction. The interstage cooler shall have a pressure relief valve and an automatic condensate drain valve. Compressors shall automatically unload during shutdown. An ASME relief valve, set at 110 percent of the compressor's rated discharge pressure and sized for not less than the unit's maximum capacity, shall be provided on the compressor discharge. The crankcase shall be provided with a low oil level switch. The discharge of the compressor shall be provided with an adjustable high temperature discharge switch. The oil level and discharge temperature switches shall be SPDT rated 5 amps at 120 volts for use with the circuit shown on the electrical drawings. Vibration isolation shall be provided as specified in Section 11020. Inlet air shall be filtered with medium efficiency filter.

2. DRIVE UNIT: The compressor shall be driven by a 1,750-rpm, 3-phase, 480-volt, Type 2 energy-efficient motor in accordance with Section 11060.

3. BASE: The compressor and drive unit shall be mounted on a common base rigidly mounted on the receiver.

B. RECEIVER:

The horizontal receiver shall have a rated pressure of 150 psig and shall have a minimum capacity of 80 gallons. Tank shall meet the requirements for Section VIII, Division 1 or Division 2 of the ASME Boiler Code. The tank shall bear an ASME inspector's stamp, complete with design working pressure and date and place of manufacture. Pressure relief valves delivered under this specification shall bear the ASME stamp. The receiver shall be delivered with threaded or flanged bosses for inlet, outlet, relief valve and connection of control pressure sensors, pressure gage, and receiver drain.

C. SEPARATOR:

The moisture separator shall be of the centrifugal impingement type selected for air flows specified herein. Moisture separator shall be Wright-Austin, Adams, Basco, or equal. The trap size shall be as recommended by the separator manufacturer and shall be the automatic, float-actuated type.

D. INTAKE FILTER-SILENCER:

Each compressor shall be equipped with an oil bath type inlet air filter and inlet silencer. The filter element shall be of the cleanable type. Each filter-silencer shall be provided with threaded or flanged connections and mounting brackets suitable for proper installation. Interior surfaces shall receive a rust-inhibitive coating and exterior surface shall be prime coated. Each filter-silencer shall be sized so that the back pressure produced will not adversely affect performance of the compressor to which it is connected. Minimum noise reduction by octave frequency band shall be as follows:

Octave band, Hz	Attenuation, decibels
63	14
125	19
250	25
500	22
1,000	21
2,000	18
4,000	17
8,000	17

E. CONTROLS:

Each compressor shall be provided with a local control panel. The control panel shall be designed in accordance with Division 16 and 17. Provide a flange type, 480 VAC main disconnect switch with the handle accessible from outside the control panel door. The control panel shall have a NEMA 4X enclosure, 316 SS. The control panel shall include the motor starters for the compressors. Starter shall be provided as per specification 16155. The controls shall be 120 VAC; provide a 480 VAC/120 VAC control power transformer. The control panel shall have a light for each blower alarm on the front of the panel door. Each compressor shall be provided with a run time meter, HAND-OFF-AUTO switch with a spring return to "OFF" from the "HAND" position on the panel door, and an on/off light for each compressor. Provide a Lead AC selector switch with Auto Alternation; 1/2/ALT.

Each compressor shall be supplied with low oil level switch. Low oil level alarm shall require a manual reset. Three pressure switches shall be supplied with the receiver. Provide a dry contact for a low-low pressure alarm for remote alarm indication. Pressure gage shall be provided as per specification 17000-3.03 PG and pressure switches shall be provided as per specification 17000-3.03 PS.

The compressor shall monitor the high and low pressure switches. When the selector switch is in the "AUTO" position, the compressor shall run when the low pressure switch is actuated. The compressor shall shut off when the high pressure switch is actuated. In the hand position, the compressor shall run until the high pressure switch is actuated. The compressor shall shut off when the high discharge temperature or the low oil switches are actuated.

The control system shall automatically start and stop the compressor to maintain pressure in the receiver between 80 and 100 psig. The control shall not load the compressor until it has reached full speed.

F. SOUND ATTENUATING ENCLOSURE:

The compressor system shall be provided with a sound attenuation package to fully enclose the compressor system. This package shall consist of an insulated, rigid acoustical enclosure which is placed over the compressor system and motor assembly and supported from the surrounding concrete slab. The sound attenuation package shall be capable of reducing the sound by 25 db at a minimum. Insulation shall have a class-1 flame spread rating and be weather-proof.

The enclosure size shall be coordinated with the compressor system provided to allow access to all compressor system components, piping connections, etc. A minimum of 2 feet clear shall be provided on all sides of the compressor system.

The sound enclosure shall be provided with hinged access openings and/or manways as required to access all compressor system components for maintenance and removal. All fasteners and hinges shall be stainless steel. Access openings/manways shall be gasketed

with acoustic material on all interior surfaces. Enclosure shall include appropriate interior lighting activated by a hand-switch.

The enclosure shall be fitted with an acoustical louvered vent (minimum 24” x 24”) for air intake and exhaust fan (minimum 1,000 cfm) for heat dissipation as recommended by the compressor system manufacturer. Exhaust fan shall be thermostatically controlled.

The enclosure shall be supplied with all required systems and appurtenances to provide the functions specified above.

2.04 PRODUCT DATA

The following information shall be provided as specified in Section 01300:

1. Operation and maintenance information specified in Section 01730.

2. Completed preventive maintenance Form 11000-C specified in Section 01999.

3. Catalog cut sheets for control devices (pressure switch, temperature switch, level switch, pressure gage).

2.05 STANDBY COMPONENTS

The following standby components shall be furnished for the compressor:

1	-	complete set of crankshaft oil seals
1	-	complete set of compressor bearings
1	-	complete set of gaskets
1	-	set of piston rings
1	-	set of valve fingers, plates, and springs
2	-	filter pads
5	-	of each type fuse
3	-	of each type relay
5	-	of each type pilot light lamp

PART 3--EXECUTION

3.01 INSTALLATION

Equipment shall be provided and tested within the tolerances recommended by the equipment manufacturer. In addition, equipment shall be installed and tested under the direction of installers who have been trained by the equipment manufacturer. The installation shall be certified on Form 11000-A specified in Section 01999. The equipment shall be installed as specified in Section 01660, unless otherwise specified. These requirements, however, shall

not be construed as relieving the Contractor of his overall responsibility for this portion of the work.

3.02 FIELD INSPECTION AND TESTING

Inspection, testing and certification shall be provided, and testing procedures and forms shall be submitted and used, as specified in Section 01660.

3.03 TRAINING

A minimum of 4 hours of training, scheduled at least 3 days in advance with the Owner, shall be provided by a qualified manufacturer's representative. Training shall be certified on Form 11000-B specified in Section 01999.

3.04 PAINTING

Equipment shall be shop primed prior to shipment from the factory with a primer compatible with the field finish coating as specified in Section 09900.

END OF SECTION

SECTION 11452

RESIDENTIAL APPLIANCES

PART 1 - GENERAL

1.1 SUMMARY:

A. Related work specified elsewhere:
   1. Plumbing connections.
   2. Ductwork connections.
   3. Electrical connections.

1.2 SUBMITTALS:

A. Product data: Indicate product descriptions, full characteristics, sizes and finishes. Include rough-in details, electrical and plumbing requirements, as applicable.

B. Certification: Submit written certification that products are ENERGY STAR qualified.

1.3 QUALITY ASSURANCE:

A. Energy performance, ENERGY STAR: Provide appliances that qualify for the EPA/DOE ENERGY STAR product labeling program.

1.4 DELIVERY, STORAGE AND HANDLING:

A. Deliver equipment in manufacturer's protective packaging.

B. Store equipment in packaging to prevent soiling or physical damage.

C. Handle equipment in manner to prevent damage to finished surfaces and operating mechanisms.

1.5 PROJECT/SITE CONDITIONS:

A. Protection: Protect prefinished surfaces from damage or staining. Following installation, provide protective covering for equipment until Date of Substantial Completion.

B. Coordinate installation of appliances required to be built into other work. Secure templates or lay out to rough dimensions provided by equipment manufacturer.

1.6 WARRANTIES:

A. Furnish manufacturer's standard appliance warranties as part of Contract closeout documents. Warranties shall begin on Date of Substantial Completion.

PART 2 - PRODUCTS

2.1 MANUFACTURERS:

A. Acceptable manufacturers:
1. Amana Refrigeration, Inc.
2. General Electric Co.
3. Basis of design; Whirlpool Corp.
4. Accepted Equivalent.

B. All products provided under this section shall be by the a single manufacturer.

2.2 APPLIANCES:

A. Microwave oven: Whirlpool, GT4175SPS Countertop Microwave Oven; 1.7 cubic foot, 1200 watts cooking power with following characteristics:
1. Maxwave (trademark) Cooking System.
2. Auto defrost.
3. Sensor reheat.
4. Sensor cooking cycles.
5. Jet Start (trademark) Control; 30 seconds.
6. Warm hold cycle.
7. Staged cooking.
8. 10-level variable cooking power control.
9. Recessed glass turntable.
10. Finish: Stainless steel.

B. Refrigerator: Whirlpool, WRT351SFYF Freezer on Top Refrigerators, with ENERGY STAR qualified refrigerator and other following characteristics:
1. Monochromatic stainless.
2. Freezer capacity: Minimum 6.1 cubic feet.
3. Refrigerator capacity: Minimum 15.0 cubic feet.
4. Total capacity: Minimum 21.2 cubic feet.
5. Controls: Single knob/single thermostat.
6. Ide maker with removable ice bin.
7. Dimension:
a. Width: Maximum 32-1/2 inches.
b. Depth with door open 90 degrees: 33.875 inches.
c. Height to top of cabinet: 66-1/2 inches.

8. Finish: Stainless steel.

C. Provide accessory materials for complete and functional operation of each appliance.

PART 3 - EXECUTION

3.1 INSTALLATION:

A. Uncrate and set appliances in place, or install in cabinets as indicated. Level units, clean finishes and test all functions to ensure proper operation.

B. Perform final electrical connections under requirements of Division 26, Electrical; mechanical and plumbing connections, under Division 22, Plumbing.

C. Just prior to Date of Substantial Completion, clean exterior and interior of appliances using cleaners as recommended by manufacturer's product data.

END OF SECTION

SECTION 11485

MOTOR-DRIVEN SINGLE-STAGE DUAL-VANE CENTRIFUGAL AIR BLOWERS AND CONTROLS

PART 1--GENERAL

1.01 DESCRIPTION

A. SCOPE:

This section specifies motor-driven single centrifugal blowers with appurtenances. Included in this section are blower lubrication systems, local blower controls, motor starters, enclosures and related accessories. A total of three blowers of equal size will be provided with one of the three serving as an installed spare. All items specified in this section, unless otherwise noted, shall be supplied by a single equipment manufacturer with unit responsibility for a properly functioning blower system with the objective to minimize power consumption while providing the proper volume of air to the aeration tanks. All components shall be new. Both workmanship and materials shall be of the very best quality and conform to all applicable sections of these specifications.

The Blower System Manufacturer will provide those components specified herein. The Contractor shall install the equipment specified herein and shall provide all other miscellaneous and ancillary components necessary to provide a complete and functional aeration air blower and control system, capable of meeting the requirements set forth in this section.

B. TYPE:

Motor-driven blowers provided under this section shall be centrifugal mixed-flow or radial turbo impeller type with integral speed increasing gear. Designs incorporating external gear speed increasing gears with high-speed couplings are specifically prohibited. Included with each blower shall be the drive motor, lubrication system, blower pressure/volume control system, surge control system, control panel, and accessories. The blower, motor, lubrication system, and blower pressure/volume control devices shall be mounted on a common fabricated bed plate. The control instrumentation shall be provided in a separate cabinet, as specified in Division 17 and herein. The surge control valve and silencer, and certain accessory equipment and items shall be shipped loose for field installation.

C. EQUIPMENT LIST:

Item	Blower 1	Blower 2	Blower 3
Inlet Filter	FLT-3041	FLT-3042	FLT-3043
Inlet Filter Silencer	SLR-3041	SLR-3042	SLR-3043
Blower	B-3041	B-3042	B-3043

Item	Blower 1	Blower 2	Blower 3
Vendor Control Panel	VCP-3041	VCP-3042	VCP-3043
Blow-Off/ Surge Control Valve	CV-3041	CV-3042	CV-3043
Blow-Off/ Surge Control Silencer	SLR-3041-2	SLR-3042-2	SLR-3043-2
Discharge Check Valve	1 (no tag)	1 (no tag)	1 (no tag)
Discharge Isolating Valve	V-3041	V-3042	V-3043

D. PERFORMANCE AND DESIGN REQUIREMENTS:

677.

1. GENERAL: The blowers will provide aeration air for the activated sludge process at the Little River WRF. Oxygen demand will vary in response to the plant flow rate and the wastewater characteristics in the treatment plant's service area and in response to various process parameters. To accommodate these fluctuations, the instantaneous rate of air flow to the aeration basins will be controlled by a dissolved oxygen flow control system serving 4 aeration zones distributed to each train. There are two trains in the biological system. Pressure in the aeration air system manifold will be controlled by adjusting the blower's capacity via variable diffusers and inlet guide vanes.

2. OPERATING CONDITIONS: The blowers will be installed outdoors in a weatherproof, acoustical sound enclosure, which will be ventilated with unfiltered air but will not be climate-controlled. Only the motor control panel with blower motor starters will be located in the electrical room that will be air-conditioned. Ambient temperatures outdoors are expected to range between 10 and 95 degrees F. The blowers will be located at an approximate elevation of 880 feet above sea level. Blower supply air will be drawn from outside the sound enclosure through inlet filters connected to the enclosure.

3. OPERATING REQUIREMENTS: The blower shall be rated to meet the following maximum design requirements:

Rated flow per blower, minimum, scfm	2,000
Rated flow at turndown condition, scfm	900
Discharge pressure, psig	6.4
Discharge pressure at turndown, psig	5.7
Barometric pressure, psia	14.26
Inlet filter loss, in. w.c.	3
Pressure at blower inlet flange, psia (Includes inlet losses)	14.15
Maximum inlet temperature, degrees F	95

Relative humidity @ max temp., percent	85
Minimum inlet temperature, degrees F	10
Surge point	
Flow per blower, scfm	2,000
Discharge pressure, psig	6.5
Minimum shaft efficiency at rated flow, percent	80
Motor speed, maximum, rpm	3,600
Motor efficiency, minimum, percent	95
Motor horsepower, maximum, hp	75
Motor full-load power factor, minimum, percent	90
Sound pressure level free field at 3 feet outside the enclosure, max., dbA	85

Noise performance shall be expressed as sound pressure levels (SPL) in decibels as read on the "A" weighting scale of a standard sound level meter (dbA); all measurements shall be made in relation to a reference pressure of 0.0002 microbar.

The blower shall have, as a minimum, 0.5 psi pressure rise to surge from the rated discharge pressure.

4. GUARANTEED OPERATING PERFORMANCE: The blower manufacturer shall provide guaranteed power consumption values for each of the following operating points. Guaranteed power consumption shall include the variable frequency drive and motor losses. This information shall be provided with the contractor's bid for evaluation.

Design Point	Capacity %	Flow scfm	Discharge Pressure psig	Inlet Temp °F	RH %	Guaranteed Power Consumption Hp*
1	100	2,000	6.4	100	90	_____
2	75	1,500	6.4	60	50	_____
3	60	1,200	6.4	60	50	_____
4	45	9,00	6.4	25	40	_____

* To be completed by Blower Manufacturer.

E. MANUFACTURER/CONTRACTOR COORDINATION:

The Contract drawings and specifications depict various components of a multi stage blower system as specified under Section 11486 and the single stage blowers as specified in Section 11485. The drawings depict worst case conditions (size, power requirements, etc.) for both systems. Bidding contractors are to base their bid on the single stage blower (section 11485) but are also to include the cost breakdown for both the single stage blower and the multi stage blower on the bid form. The Owner will select the blower to be provided at the time the Contract is executed. It is the Contractor's and blower manufacturer's responsibility to review the Contract documents and coordinate all changes as necessary to accommodate the equipment provided. All costs for providing either of these systems shall be included within the contractor's bid.

F. CRITICAL SPEEDS AND TORSIONAL DESIGN:

A critical speed analysis shall be performed. The analysis shall include damped, unbalanced response for the specific machine and all parasitic power train loads. The complete rotating element, including motor, coupling, speed increasing gear, and blower rotor, shall be free from critical speeds within an envelope 10 percent below to 10 percent above operating speed. Any responsive lateral critical speed of the rotating assembly shall be at least fifteen (15) percent from the normal operating speed. Any torsional resonances of the package shall be at least ten (10) percent from the normal operating speed. All shafting shall conform to "Design and Selection of Components for Enclosed Gear Drives" (AGMA 6001-D97).

G. CONTROLS AND ELECTRICAL:

1. GENERAL: Each blower shall be provided with a skid mounted vendor supplied control panel (VCP) to contain the machine's start/stop, surge, and pressure/ volume/ temperature controls as well as monitoring and safety/ shutdown systems. Each blower shall also be provided with a free standing motor control panel that will be installed remotely in the plant electrical room.

Blower control logic shall be as described in Section 17900 with any modifications required to suit the equipment provided. The contractor and blower manufacturer shall review the blower and DO control description as shown on drawing 30-I-604 and 30-I-601 and Specification Section 17900 and note any revisions necessary to suit the equipment provided. The contractor and blower manufacturer shall work with the System Integrator and Engineer to ensure that the control logic for DO and pressure control, blower selection, blower capacity adjustment, etc., are fully coordinated with the equipment provided.

2. LOCAL CONTROL PANEL:

a. The local Vendor Control Panel (VCP) shall meet the requirements of Section 17110. Unless otherwise specified, electrical control circuits shall operate on 120 volts AC, single phase. Positioning systems for all valves shall operate at 4-20 mA DC. Pneumatically positioned or operated control systems will not be permitted. No motor starters or VFDs shall be provided in the local control Panel. Electrically isolated

contacts shall be provided for connection to all external circuits.

b. Each VCP shall be rated NEMA 4X and contain an Allen Bradley PLC. PLC requirements are as specified in Section 17310. A 7.5" color OIT, shall be provided for local indication and control of all blower system alarms and functions. The PLC and OIT shall be supplied with removable compact flash memory that shall contain the vendor supplied programs with back up memory cards. A list of all available alarm, control and monitoring signals with associated memory addresses/tags shall be made available to the Contractor for Integration with the plant MCP and SCADA system. All controls and instruments shall fail into a safe condition. The controls shall be designed such that the blower cannot operate unless the controls are energized, nor can they operate with any defective controls. The PLC shall contain a program for continuous optimization of blower efficiency with respect to changes in capacity, inlet temperature, and differential pressure across the blower.

c. Blower instrumentation shall be factory wired to vendor supplied control panel. Items shipped loose such as the Blow-Off-Valve and Discharge Temperature Transmitter shall be wired to the associated VCP PLC by the Contractor. Electrically isolated contacts shall be provided for connection to all external circuits. Analog signal wiring, discrete signal wiring and power wiring shall be separated. Equipment power wiring shall be separated from signal wiring.

d. Each of the blowers shall communicate with the plant SCADA network via CAT-6 copper link. The communication protocol shall be Allen Bradley Ethernet IP. A network switch shall be provided in each blower control panel. Provide redundant 24VDC power supplies that alarm the PLC on power supply failure.

e. The local VCP shall include as a minimum all control devices as shown on Drawing 30-I-604 and the devices specified in Par. 2.03.E

f. In addition, VCP OIT shall contain status indication and isolated control contacts for the following:
    1) Lubricating oil pump
    2) Inlet guide (outlet diffuser) vane, minimum position, maximum position
    3) Blow off-Surge control valve full open, closed
    4) Discharge valve open, closed
    5) Any other devices required for startup/shutdown or operation of the blower systems

g. The local VCP shall provide 120 VAC power supply to the ventilation fan and light for the blower sound enclosure. Each power supply will be provided with fuse protection and local disconnecting means.

3. MOTOR CONTROL PANEL:

a. The Motor Control Panel shall meet the requirements of Section 16176. The control panel shall be rated NEMA-12 and shall accept a 480 VAC, 60 hertz, 3-phase power input.

b. Each blower motor control panel shall include a solid state starter to control starting and stopping the blower motors. Solid state starters shall meet the requirements specified in section 16155.

c. The blower motor control panels shall be installed in the plant electrical room. Contractor/Supplier shall review the electrical room plans and note the area allocated for this equipment.

4. STARTUP/SHUTDOWN: When a blower is in Manual mode, the blower will be started and stopped from the OIT located on the VCP. Internal interlocks and hard-wired control systems or a microprocessor-based control system shall be provided to initiate prestart lubrication through operation of the electric motor-driven lube oil pump and initiation of blower motor start once proper lube oil pressures have been established. Interlocks shall be provided to prevent start if the inlet guide vanes and/or outlet diffuser vanes are not at minimum position and the discharge isolating and the surge control valve are not fully open. Start shall also be prevented if the motor has been started within the minimum time interval recommended by the motor manufacturer. Once start has been initiated, no further operator action shall be required to place the blower in full, automatic operation. Once the machine has accelerated to operating speed, the surge control valve shall close, and the inlet guide vanes, outlet diffuser vanes, or a combination of both shall modulate to satisfy pressure/volume control system requirements. Control flexibility shall be provided to adjust the speed of operation of the surge control valve.

On initiation of the shutdown sequence, the inlet guide vanes and/or outlet diffuser vanes shall be at minimum position, the surge control valve shall open, the discharge valve shall close, and the blower motor shall be de-energized. The electric motor-driven oil pump shall continue to operate until the machine has come to rest and the lubrication oil has been properly cooled.

5. SURGE CONTROL: The surge control system shall function to modulate blower volume to prevent surge by bypassing a variable portion of the machine's output during startup and shutdown and whenever the blower pressure/volume controls require process output less than the blower's surge limit. The surge control system shall incorporate the manufacturer's latest design standard, with primary surge monitoring elements interlocked with the safety shutdown controls. Surge controls may function on the basis of either inlet guide or outlet diffuser vane position or on the basis of motor power or a combination of these. The VCP shall contain the process controller for the blower operational controls only. A shorting switch shall be provided wherever the CT leads are terminated. The controls shall provide appropriate electronic positioning signals to the externally mounted surge control valve's positioner.

6. PRESSURE/VOLUME: Blower pressure and volume control shall be as described in Section 17900. Each VCP shall contain a process controller for adjusting the

position of the blower's inlet guide and/or outlet diffuser vanes in response to an external 4-20 ma control signal. The controller shall provide appropriate electronic control signals to the blower mounted vane positioning devices.

7. SAFETY SHUTDOWN: There shall be three means of shutting down a single-stage blower:

a. Normal Stop – Initiated by pushing the stop button or remote stop. The unit normally stops such that no surging occurs.

b. Soft Stop – Initiated by: High oil temperature; Low oil pressure; High inlet air temperature (recirculation/surge); High discharge air temperature; High motor winding temperature; High motor bearing temperature; High blower bearing temperature; Discharge valve has not fully opened within two (2) minutes after receiving feedback signal from starter; Blow-off valve has not closed within five (5) minutes after receiving feedback signal from starter; High motor amps; Surge. Soft stop shall de-energize the main drive motor eight (8) seconds after alarm initiation to allow the blow-off valve to partially open.

c. Emergency Stop – Initiated by: Pushing emergency stop button; High vibration; No feedback signal from starter during Start Sequence; Loss of feedback signal from starter during Normal Operation; Sequence failure during start-up; PLC failure. Emergency stop shall de-energize the main drive motor immediately.

8. TOUCH SENSITIVE OPERATOR INTERFACE: The VCP's shall contain a touch sensitive operator interface containing the following alarm indications. A rotating red beacon shall be mounted on the top of the panel. The beacon light shall operate whenever an alarm condition exists. Alarm conditions shall include the following:

a. The shutdown conditions listed above
b. Low lubricating oil temperature
c. Oil filter differential pressure
d. Bearing temperature alarm
e. Any other conditions recommended by the blower manufacturer.

9. COMMUNICATION: Data communication shall be provided between the PLC's, located in each single-stage VCP, and the plant SCADA system as shown on Drawing 00-I-008. All network terminations shall be the responsibility of the Contractor. The Contractor shall field wire all items between components as required for the system provided

All communication between I/O Data available at the VCP PLC shall be communicated to/from the Master Control Panel via Allen Bradley Ethernet IP interface.

1.02 QUALITY ASSURANCE

A. FACTORY TESTS:

1. GENERAL: Factory tests shall conform to ASME Power Test Code for Centrifugal Compressors and Exhausters, PTC-10-1997

2. BLOWER PERFORMANCE TEST: The test shall be conducted at constant speed and shall extend from the surge point to not less than 110 percent of design volume at design pressure. The test shall be sufficiently comprehensive to produce guaranteed performance characteristics. The test data shall be employed to produce operating curves showing pressure-capacity, power-capacity, and efficiency capacity curves and surge points for each operating condition specified. Capacity shall be in inlet cfm.

Factory tests shall be performed in accordance with ASME PTC-10, Class II.

The Owner will require a witnessed test. Accordingly, the Contractor shall furnish the Construction Manager with at least 6 weeks' written notification of the time and location of the test.

3. MOTOR TEST: The motor shall be tested as specified in Section 11060 Electric Motors.

4. FUNCTIONAL TESTING: Upon completion of assembly and prior to shipment to the project site, each blower, motor, and oil lubrication skid shall be functionally tested with the VCP connected to all skidded instruments, electric valves, and appurtenances. The test shall simulate field operation from minimum to full capacity. This test shall be performed for the purpose of demonstrating proper assembly and that the equipment functions without adverse characteristics of any kind. The oil lubrication system shall be tested for leaks. All start/stop sequences and all safety and alarm systems shall be tested, simulating start of the blower motor.

Once assembled at the site, during the startup and commissioning phase, the complete blower and aeration system shall be field functional tested with the motors connected and operated from min to full capacity. The field test shall be sufficiently comprehensive to satisfy the Engineer that all components have been assembled on the blower baseplate properly, the subsystems are free from leaks and the main drive and blower vibration are within the manufacturer’s acceptable tolerances.

B. REFERENCES:

This section contains references to the following documents. They are a part of this section as specified and modified. Where a referenced document contains references to other standards, those documents are included as references under this section as if referenced directly. In the event of conflict between the requirements of this section and those of the listed documents, the requirements of this section shall prevail.

Unless otherwise specified, references to documents shall mean the documents in effect at the time of Advertisement for Bids or Invitation to Bid (or on the effective date of the Agreement if there were no Bids). If referenced documents have been discontinued by the issuing organization, references to those documents shall mean the replacement documents issued or otherwise identified by that organization or, if there are no replacement documents, the last version of the document before it was discontinued. Where document dates are given in the following listing, references to those documents shall mean the specific document version associated with that date, regardless of whether the document has been superseded by a version with a later date, discontinued or replaced.

Reference	Title
ASME PCT-10-97	Power Test Code for Compressors and Exhausters
ASME Section VIII (1986)	Boiler and Pressure Vessel Code; Pressure Vessels Division 1, with Addenda through Winter 1984
ASTM A48-83	Gray Iron Castings
ASTM A747-89	Steel Castings, Stainless Precipitation Hardening
NEMA MG1-87	Motors and Generators
ANSI/IEEE 112-84	Polyphase Induction Motors and Generators

C. UNIT RESPONSIBILITY:

The Contractor shall cause the equipment specified under this section to be provided by the blower manufacturer, who shall be fully responsible for the design and selection and operation of all systems and components provided therewith. The blower manufacturer shall provide a certificate of unit responsibility (Form 11000-C in Section 01999) as specified in paragraph 11000-1.02 C.

The Manufacturer shall have at least 10 blower installations in North American municipal wastewater treatment plants in satisfactory operation. In addition, the Manufacturer shall have at least 10 installations in North America in satisfactory operation with dissolved oxygen aeration system control. The manufacturer shall provide a list of these installations along with contact information.

Additionally, the Contractor shall unload, place, install, adjust, test, and perform initial startup of the equipment specified under this section per the manufacturer’s written instructions under the supervision of the Engineer. The Contractor shall cause the responsible equipment manufacturer to supply qualified installation technicians for testing, initial startup, and training for the equipment specified under this section. The Contractor shall furnish an affidavit, signed and notarized as above, attesting that the equipment has been properly unloaded, placed, installed, adjusted, tested, and started in accordance with the manufacturer's requirements for proper operation and acceptable service life. Nothing in these provisions, however, shall be construed as relieving the Contractor of responsibility for the overall quality and completeness of the work.

1.03 SUBMITTALS

Submittals shall be provided in accordance with the following information:

1. A copy of this specification section, with addendum updates included, and all referenced and applicable sections, with addendum updates included, with each paragraph check-marked to indicate specification compliance or marked to indicate requested deviations from specification requirements. Check marks (✓) shall denote full compliance with a paragraph as a whole. If deviations from the specifications are indicated, and therefore requested by the Contractor, each deviation shall be underlined and denoted by a number in the margin to the right of the identified paragraph, referenced to a detailed written explanation of the reasons for requesting the deviation. The Engineer shall be the final authority for determining acceptability of requested deviations. The remaining portions of the paragraph not underlined will signify compliance on the part of the Contractor with the specifications. Failure to include a copy of the marked-up specification sections, along with justification(s) for any requested deviations to the specification requirements, with the submittal shall be sufficient cause for rejection of the entire submittal with no further consideration.

2. A copy of the contract document control diagrams and process and instrumentation diagrams relating to the submitted equipment, with addendum updates that apply to the equipment in this section, marked to show specific changes necessary for the equipment proposed in the submittal. If no changes are required, the drawing or drawings shall be marked *"no changes required"*. Failure to include copies of the relevant drawings with the submittal shall be cause for rejection of the entire submittal with no further review.

3. Certificate of Unit Responsibility attesting that the Contractor has assigned, and that the manufacturer accepts, unit responsibility in accordance with the requirements of this section and paragraph 11000-1.02 C. No other submittal material will be reviewed until the certificate has been received and found to be in conformance with these requirements.

4. Manufacturer's catalog data and shop drawings confirming dimensions, weight, construction, and installation details of blower and all associated equipment.

5. Complete torsional and critical speed analysis results to ensure that the blower, motor, and coupling are properly designed. Include data in the submittal to confirm that there are no torsional critical speeds within 18% of the operating range of the unit.

6. Operating noise levels shall be provided for the motor and blower combination. Noise shall be expressed as sound pressure levels (SPL) in decibels as read on the "A" weighting network of a standard sound level meter (dbA); all measurements shall be made in relation to a reference pressure of 0.0002 microbar.

7. Drawing and catalog information detailing all control devices in the control cabinets as well as overall panel layout interconnection diagrams and construction.

8. Special requirements, showing clearances required for maintenance purposes.

9. Factory motor test results, per the required NEMA MG1 and IEEE 112, Method B tests, for either the job motor or prototype motor as previously stated.

10. Motor Submittals with following information:

    a. Motor Data Form 11060-A

    b. Running amperes, efficiency and power factor at 25%, 50%, 75%, 100%, 115% and 125% of rated power output.

    c. Locked rotor, full load, and breakdown output torque.

    d. Speed-torque/current curve for both full voltage and reduced voltage starting. Blower load acceleration torque requirements shall be plotted on the same curves.

    e. Maximum connected load inertia for 100% voltage starting.

    f. Acceleration time with maximum inertia load for 100% voltage starting.

    g. Safe stall time for 100% voltage starting (cold start and hot start).

    h. Rotor inertia.

    i. Maximum power factor correction at 25%, 50%, 75%, and 100% of full load.

11. Response curves for all temperature sensors.

12. Guaranteed maximum power consumption.

1.04 SHIPMENT

Equipment shipment, protection, and storage shall conform to the manufacturer's written requirements and Section 01605.

1.05 WARRANTY

In addition to the guarantee specified in the General Conditions, the blower manufacturer shall provide a written warranty to cover the blower package, including the motors and control components, against defects in workmanship and material for a period of three (3) years from the date of start-up. The manufacturer's warranty shall be issued in the Owner's name.

PART 2--PRODUCTS

2.01 ACCEPTABLE PRODUCTS

The air blower mechanical components, actuators, accessories, instruments, controls, and control system shall be supplied by a single Blower Manufacturer who is fully experienced, reputable, and qualified in the supply of the equipment specified.

All control panels provided shall be designed, constructed, and tested "in-house" by the Manufacturer. This work shall not be outsourced, the purpose being to ensure quality assurance, control, and testing by the Manufacturer in an ISO 9001 certified shop.

The Manufacturer's machining and assembly shops must be ISO 9001 certified in order to assure conformance to the highest quality standards of the industry.

The equipment detailed in this Section is specified by proprietary name, trade name and/or name of one Manufacturer. These items are so specified for reasons of maintenance and operation, as well as obtaining desirable features best suited to the requirements of the specification and available space on site.

The blower equipment shall be as manufactured by Turblex (Siemens Energy, Inc.), Springfield, Missouri, U.S.A.

2.02 MATERIALS

Component	Material
Casing	Ductile iron ASTM A536 60-40-18
Impeller	Forged aluminum alloy.
Lube Oil Piping	Conforming to Section 15050, Piping System 18 or per API 672

Materials specified herein are considered the minimum acceptable for the purposes of durability, strength, and resistance to erosion and corrosion. The Contractor may propose alternative materials for the purpose of providing greater strength or to meet required stress limitations. However, alternative materials must provide at least the same qualities as those specified for the purpose.

2.03 EQUIPMENT FEATURES

A. GENERAL:

The blowers will be used for supplying a variable volume of air to the aeration basins. All items specified in this section shall be supplied by the Manufacturer to provide a sole source responsibility for a properly functioning aeration system. All components shall be new. Both workmanship and materials shall be of the very best quality and conform to all applicable sections of these specifications. It shall be understood that components specified establish minimum requirements only, and do not relieve the Contractor of responsibility for providing a properly functioning system.

B. BLOWER:

The blowers shall be motor driven, single-stage centrifugal, vertical split type complete with integral gearbox and accessories as described herein. Each blower shall be provided with axial inlet, side discharge, with discharge adjustable radially in fifteen (15) degree increments.

1. CASING: The casing shall be designed for a minimum pressure of 50 psig. The discharge nozzle shall be oriented as shown for connection to the field piping. Material shall be ductile iron ASTM A536 60-40-18 vertically split, have a maximum continuous duty design temperature of 400 degrees F.

2. IMPELLERS: The impeller shall be of the open radial flow type, with backward leaning blades and milled from forged aluminum alloy. Impellers construction of any other method or material shall not be acceptable. The impeller shall be attached to the shaft by shrinkfit and locknut arrangement. The impeller shall be statically and dynamically balanced.

The axial gap between the impeller and compressor casing shall be adjustable by means of shims in order to assure the prescribed gap. Gap adjustments by means of machining the casting or shafts are not acceptable.

3. SEALS: Non-contact, multi-point, labyrinth seals shall be provided and operated dry. Seals shall be designed to absolutely prevent oil from contaminating the process air stream.

4. BALANCE: Rotor vibration (unfiltered) at the intended operating speed shall not exceed 1.5 mils. Electrically or mechanically induced vibration in the completed rotor assembly shall not exceed 0.5 mils.

5. GEARS, SHAFT, BEARINGS: The blower gear shafts shall be machined from heat-treated, forged steel and suitably ground. Any responsive lateral critical speed of the rotating assembly shall be at least fifteen (15) percent from the normal operating speed. Any torsional resonances of the package shall be at least ten (10) percent from the normal operating speed. All shafting shall conform to “Design and Selection of Components for Enclosed Gear Drives” (AGMA 6001-D97).

678.

679. The speed-increasing, helical, parallel shaft type gears shall be made of case-hardened alloy steel forgings with the gear teeth precision ground. All gears shall be rated in accordance with “Fundamental Rating Factors and Calculation Methods for Involute Spur and Helical Gear Teeth” (AGMA 2101-C95). The gears shall be manufactured to a minimum AGMA quality number of twelve (12) per “Gear Classification and Inspection Handbook” AGMA 2000-A88.

680.

681. The speed-increasing gearbox shall be splash oil lubricated and air-cooled via fins on the casing. Angular contact hybrid roller bearings with steel race and Silicon Nitride (Si3N4) ceramic balls shall be used in the gearbox. Steel ball bearings shall not be acceptable.

6. VARIABLE VANES: An adjustable inlet guide vane assembly shall be provided to pre-rotate incoming air and, thus, maximize efficiency. Inlet guide vanes shall be made in an aerodynamic, streamlined design in cross-section and located in a radial fashion around the annular inlet. Inlet guide vane position shall be controlled by the efficiency optimization software matrix from the VCP.

The inlet guide vanes shall modulate simultaneously with the diffuser vanes to continuously optimize efficiency based on the three variables of inlet temperature, differential pressure, and machine capacity. The Manufacturer shall demonstrate, in submittals and testing, the simultaneous efficiency optimization based on these three variables. Step control of vanes for efficiency optimization or control using less than these three variables shall not be acceptable.

Flat steel plates shall not be used for inlet guide vanes or the variable diffuser vanes.

The inlet guide vane and the variable diffuser assemblies shall be mounted integrally with each blower, multi-leaf and pivoted, and located in cast iron housings. All vanes shall be mounted in permanently lubricated sleeve bearings. Operating linkages for inlet guide vanes and variable diffusers shall be housed within the blower. Blowers with variable vane assemblies located external to the blower housing, and/or have ball-in-socket linkages or other moving parts requiring periodic lubrication shall not be acceptable.

Each variable vane assembly shall include a skid mounted electric actuator, limit switches, and open/closed indication on the VCP. Independent floor mounting of the actuator or its operating mechanisms shall not be allowed.

The position of each set of vanes, from fully open to fully closed, shall be transmitted to the VCP via an analog signal. Position of both sets of vanes shall be indicated by an adjustable

manual lever arm and calibrated dial on the blower. The inlet guide vane and the diffuser vane position shall be indicated on the VCP.

7. LUBRICATION SYSTEM:

a. GENERAL: The lubricating oil system shall furnish filtered, cooled oil to the blower bearings. Lubrication system components include lubricating oil sump, oil pumps, lubricating oil filters, and oil cooler. The design of the system shall be such that cooled, filtered oil shall be available at all times to supply oil to all lubricated parts during starting, operation and blower rundown after loss of electrical power. Acceptable means for providing this supply include:

1) If the main oil pump is driven from the blower input shaft, the auxiliary oil pump shall be electric-motor driven and shall be used for pre-start lubrication. Main or auxiliary pumps driven from the motor shaft will not be allowed. Shaft-driven pumps shall be oversized to provide sufficient flow as the blower coasts to a stop.

2) A stored energy system with nitrogen charged bladder type accumulators designed to supply oil during power failure and failure of the main oil pump.

3) An air-driven oil pump with sufficient stored energy in an on-board receiver to drive the pump during a coast-down. Oil pump operation shall be controlled by a normally open solenoid valve which shall open to drive the auxiliary pump upon power failure or failure of the main oil pump. The valve shall be controlled through circuitry in the VCP to prevent operation of the air-driven pump during the normal shutdown sequence.

b. SUMP: The lubricating oil sump may be incorporated into the base or may be a separate sump which resides in the base. The sump shall be equipped with a sight gage, breather filter/vent, and valved drain. Inlets and outlets shall be suitably baffled, and anti-foam baffles shall be provided. No tapped holes shall extend into the sump.

c. OIL PUMP: The electric-motor-driven oil pump may be either a submersible pump located in the sump or a foot-mounted pump located on the blower base. Removable sump magnets shall be located to protect pump intakes. Base-mounted pumps shall be self-priming type. Motors shall be Type 2, energy efficient type.

d. FILTER: The filter shall be of the full flow, replaceable cartridge type. Selection of the on-line cartridge shall be through operation of a single double-circuit valve as supplied with the filter. Tattle tales shall be provided for each filter. One differential pressure switch shall be provided for each filter.

e. LUBE OIL COOLER: The lube oil cooler shall be a fan-cooled radiator mounted on the common skid with the blower.

f. PIPING: Lube oil piping upstream of the oil filter system shall be schedule 40 steel pipe/tubing. All piping downstream of the oil filter system shall be 304 stainless steel. All piping shall be welded in accordance to AWS D1.1 & Manufactures ISO 9001 standards.

C. ACCESSORIES:

1. INLET FILTER/SILENCER AND FLEXIBLE CONNECTOR: Each blower shall be provided with an inlet filter/silencer designed for maximum air flow at absolute minimum pressure drop, and connected directly to the inlet of the blower via a flexible connector. Walls of the silencer shall consist of sandwiched galvanized steel outer skin and an acoustical sound deadening material of one (1) inch sound insulation containing an inert barrier, on the inside of the housing. The inert barrier on the walls shall have a thin aluminum foil on its exterior, affixed to the barrier with an industrial adhesive. The silencer housing structural frame shall be hot-dipped galvanized. Legs shall be adjustable for vertical positioning and leveling.

The integral inlet silencer shall consist of a set of lamella, mounted internally in the filter/silencer between the filter elements and the blower inlet, suitably wrapped with sound deadening material. Lamella construction shall be such that there is no direct line of sight (direct flow) through the lamella, and the lamella so configured such that the line of air flow shall make at least four turns, for maximum attenuation. An air tight seal shall be provided between the filter frame and silencer.

The filter elements shall be rectangular, replaceable elements mounted on a flat, vertical track of aluminum construction, and removable through galvanized steel doors located on each side of the galvanized steel housing. A two-stage filter panel system shall be supplied. The coarse pre-filter shall have a removal efficiency of 93% on 10 micron. The final filter element shall have a removal efficiency of 99.5% on 2 micron. The filters shall be sized for a maximum face velocity of 575 feet/minute at peak air flow.

Maximum clean filter pressure drop of the inlet filter/silencer with the elements installed shall be 2.5 inches w.c. (0.09 psig). Maximum pressure drop with dirty inlet filters shall be 6.0 inch w.c. (0.22 psi). The values stated are the maximum acceptable pressure loss and minimum efficiencies. Blower manufacturer can select higher efficiency filters if desirable to improve the overall blower system efficiency.

The inlet filter/silencer shall be installed by the Contractor and connected to the blower inlet via the flexible connector provided.

2. DISCHARGE EXPANSION JOINT: Provide each blower with a discharge expansion joint, for field installation by the Contactor, capable of withstanding the vacuum, pressure, and high discharge air temperature under all operating conditions. The expansion joint shall be suitable for mounting between flanges drilled for standard ANSI 150 pound pattern.

3. DISCHARGE CONE/SILENCER: Provide a discharge cone/silencer (Evasé stack), for field installation by the Contactor, to increase the blower outlet size to the larger diameter air discharge piping. Maximum sidewall angle increase shall be 7° per side (14° total). Minimum 10-gauge carbon steel shall be used with discharge flange and bypass flange size as shown on the drawings. Instrument connections shall be provided, for components mounted by the Contractor, on the cone/silencer. The inside of the discharge cone/silencer shall be lined with deep layers of sound absorbing material, resistant to high temperatures, and covered by high temperature fiberglass cloth and a perforated steel plate (minimum 10-gauge thickness), so as to form sandwiched layers of the external cone/silencer surface, acoustical material, and internal perforated steel plate.

4. BLOW-OFF (BYPASS) VALVE: Each blower shall be provided with a blow-off valve to allow unloaded start-up and stopping. The butterfly valve shall be wafer type with cast iron body, ductile iron disc, EPDM seat and suitable for air service up to 250 degrees F. The valve actuator shall be the Manufacturer's standard design, motorized, 120 VAC, NEMA 4, open/close in fifteen (15) seconds or less, include limit switches and manual hand-wheel. Controls for the valve shall be located in the LCP. The valve/actuator assembly is provided for field installation and wiring to the VCP by the Contractor.

5. BLOW-OFF (BYPASS) SILENCER: Each new blower by-pass valve shall be provided with a discharge blow off silencer suitable for installation as specified. The silencer shall be selected to limit pipeline noise to not more than 90 dbA 3 feet from the blow off exhaust. The silencer shall be model number B21-10 manufactured by Stoddard Silencers, Universal Silencer SU5 or approved equal.

6. DISCHARGE ISOLATING VALVES: Provide each blower with an electronically positioned electric-motor-operated butterfly valve for field installation and wiring to the VCP by the Contractor, similar to the blow-off valve, except for size and actuation speed, which shall open/close no faster than thirty (30) seconds.

7. DISCHARGE CHECK VALVE: Provide each blower with a discharge check valve suitable for use in the service specified and capable of providing an airtight seal upon closure with minimum pressure loss when open. Check valve shall be a wafer valve of the dual, plate type with center hinge, spring closure, cast iron body, Viton-B seal and aluminum-bronze plates, Inkonel springs, and rated for temperatures up to 400 degrees F.

8. AFTERCOOLER: An aftercooler, as specified in paragraph 3.1 of API Standard 672, will not be required.

9. SOUND ENCLOSURE: Provide an outdoor rated sound enclosure free standing or integral to the skid as required to reduce the blower sound levels to the specified requirements. The enclosure can contain the inlet filter system if practical. The enclosure shall be made of painted steel and include multiple removable panels to provide ease of access to the various compressor components.

A thermostatically controlled ventilation fan shall be provided for the enclosure. Fan shall be selected by the blower system manufacturer to provide adequate cooling for the blower system. Fan shall be 120 Volt.

Transparent windows shall be provided where necessary for inspection of critical instruments or maintenance points.

A light shall be provided at each end of the enclosure to provide suitable lighting for ease of maintenance of the blower system components.

Washable air filters, and stainless steel screens shall be provided over all enclosure openings.

Power for the enclosure lightsa and ventilation fan shall be provided from the Vendor Control Panel.

D. MOTOR:

The blower drive motor shall TEFC, 480 volt, 3-phase, 60 Hz, squirrel cage induction type. The motor shall be rated for continuous duty and meet the requirements for Type 2 motors as specified in Section 11060. Motors shall be provided with over temperature protection.

E. CONTROLS AND INSTRUMENTATION:

1. GENERAL: As a minimum requirement, each blower shall be provided with the following instrumentation:

a. Inlet air temperature transmitter
b. Surge switch
c. Filter differential pressure indicator
d. Discharge pressure gauge
e. Oil temperature transmitter
f. Oil temperature gauge
g. Oil low level switch
h. Motor current Transmitter
i. Variable diffuser position transmitter
j. Variable diffuser open/close limit switches
k. Blow-off valve open/close limit switches
l. Turbocompressor bearing RTDs and transmitter
m. Turbocompressor gearbox vibration transmitter
n. Dirty oil filter switch
o. Inlet pressure transmitter
p. Discharge pressure transmitter
q. Inlet guide vane position transmitter
r. Inlet guide vane open/close limit switches
s. Motor protective devices per Section 11060.

All blower instruments shall be field calibrated and tested under actual operating conditions by the blower manufacturer.

2.04 SPARE PARTS

The following spare parts shall be provided, tagged, and stored in accordance with paragraph 11000-2.12.

4 Complete replacements, oil filter cartridges.

4 Complete replacements, air filters.

1 Complete set of bearings

1 Complete inlet guide vane and diffuser guide vane actuator.

1 Set of all tools required for maintenance, if special. Tools shall be supplied in an all-metal box on castered wheels. The box shall be fitted with a lock hasp and shall be stencil lettered with the name of the Owner and the words "Aeration Blower Tools." Tools shall be Proto or equal and shall be engraved with the Owner's name and the words "Aeration Blower."

10 of each type fuse.

10 of each type relay.

1 of each type (120 VAC and/or 480 VAC) surge suppressor

2.05 PRODUCT DATA

The following information shall be provided:

1. All test reports (3rd party witness test certification, ASME PTC-10 test report, motor test report, and functional test report) shall be certified under penalty of perjury by an official of the manufacturing corporation.

2. Applicable operation and maintenance information as specified in Section 01730.

3. Motor product data.

4. Results of critical speed and torsional analyses specified in paragraph 11485-1.01 E.

5. Affidavit specified in paragraph 11485-1.02 C.

6. Installation Certification Form 11000-A specified in paragraph 11485-3.01.

7. Training Certification Form 11000-B specified in paragraph 11485-3.03.

PART 3--EXECUTION

3.01 INSTALLATION

The blower shall be aligned, connected, and installed by the Contractor in accordance with the manufacturer's recommendations and the requirements of Sections 11002 and 11005. After completion of the initial run-in and final alignment, all components shall be dowelled to the base in accordance with the manufacturer's startup specialist. The installation shall be certified on Form 11000-A.

3.02 STARTUP AND TESTING

The equipment provided under this section shall be started and tested only under the direction of factory-trained personnel provided by the equipment manufacturer. To that end, the Contractor shall cause the manufacturer to furnish startup and testing specialist's factory trained in the proper procedures for initial installation, initial testing, and commissioning of the equipment. All such activities shall be performed under the direction of these specialists. This provision, however, shall not be construed as relieving the Contractor of overall responsibility for this work.

The Manufacturer shall furnish experienced start-up/service personnel to inspect the final installation and supervise the field start-up tests of the equipment. The services shall be provided for a minimum of two (2), eight-hour (8-hr.) days for each unit divided in three different trips. If there are difficulties in operation of the equipment due to the Manufacturer's fabrication or Contractor's installation, additional service shall be provided at no extra cost to the Owner.

A. FIELD SERVICES:

Provide, as a minimum, the following field services:

1. Verify proper connection of piping and installation of accessories

2. Field precision alignment of the motor, blower, and coupling

3. Check leveling of blower base

4. Confirm proper wiring of all instruments and field wired items

5. Run motor uncoupled for up to one-half (1/2) hour to verify motor operation and check magnetic center for proper marking/location

B. FIELD TESTING:

1. GENERAL: Field demonstration testing shall be conducted after the installation of all equipment has been completed and the equipment has operated for a sufficient period to make all desirable corrections and adjustments. The Contractor shall schedule testing with the full knowledge and consent of the Owner and shall ensure no adverse affect on the operation of plant facilities.

As a condition precedent to final acceptance of the equipment, the blower manufacturer's representative shall adjust all blower pressure/volume controls to obtain the same motor power reading from each blower at the maximum control signal. Completion of this requirement shall be witnessed by the Engineer.

2. BLOWER FIELD TESTING: Test procedures shall conform to the requirements of Section 01660 and those specified here. They shall contain the following features:

a. Static tests of all control and protective circuits.
b. Not less than 2 cold starts.
c. Not less than 24 hours of continuous operation at full load.

A minimum four (4) hour field run test for each machine shall demonstrate that, under all conditions of operation, each unit:

a. Has not been damaged by transportation or installation
b. Has been properly installed
c. Has no mechanical defects
d. Has fully functional instrumentation, properly calibrated and set
e. Will start, run, and stop in the prescribed manner
f. Will run through the entire range of specified pressure and flow
g. Has the proper shutdown sequence of standard stop, soft stop, and emergency stop
h. Is free of overheating of any parts
i. Is free of objectionable vibration and noise
j. Is free of overloading of any parts
k. Demonstrates the simultaneous and continuous efficiency optimization by altering the inlet guide vane position based on inlet temperature, differential pressure, and capacity

3. AERATION SYSTEM FIELD TESTING: Conduct a minimum of four (4) hour field run test of the aeration system instrumentation, controls, and valves. The test shall demonstrate the following:

a. The air header pressure control loop will automatically control on-line blowers in a stable, cascade and base load mode of operation.

b. Air flow control loop maintains the proper air flow to each aerated cell based on DO.

c. The DO control loop maintains a pre-set DO level in each aerated cell.

d. The entire aeration system of blowers, air flow control valves, and instrumentation operates in a stable fashion and maintains DO at operator set levels in the aeration cells.

3.03 TRAINING

The Contractor shall cause the equipment manufacturer, as part of the commissioning services, to provide not less than 2 days of on-the-job training, following start up of the first blower unit. Period for training services shall be in addition to the period for start up services specified in this section. Training may be combined with a start up trip, however if startup is unsuccessful for any reason and equipment is not fully operational during startup, training shall be reserved for a later date when the equipment is fully and continuously operational. If there are difficulties in operation of the equipment due to the Manufacturer's fabrication or Contractor's installation, additional service shall be provided at no extra cost to the Owner.

Training shall conform to the requirements of Section 01664 and shall be certified on Form 11000-B as specified in Section 01999. Training shall include the requirements of Section 01664 and the following:

1. Centrifugal blower theory

2. General operational information for the specific equipment provided under this section

3. Operation of the equipment in automatic and manual modes

4. Troubleshooting

5. Routine maintenance

This provision, however, shall not be construed as relieving the Contractor of overall responsibility for this portion of the work.

END OF SECTION

SECTION 11486

MOTOR DRIVEN MULTISTAGE CENTRIFUGAL BLOWERS FOR VARIABLE VOLUME AERATION AIR SERVICE

1.01 DESCRIPTION

A. SCOPE:

This section specifies motor-driven multistage centrifugal blowers with appurtenances. Included in this section are blower lubrication systems, local blower controls, and related accessories. A total of three blowers of equal size will be provided with one of the three serving as an installed spare. All items specified in this section, unless otherwise noted, shall be supplied by a single equipment manufacturer with unit responsibility for a properly functioning blower system with the objective to minimize power consumption while providing the proper volume of air to the aeration tanks. All components shall be new. Both workmanship and materials shall be of the very best quality and conform to all applicable sections of these specifications.

The Blower System Manufacturer will provide those components specified herein. The Contractor shall install the equipment specified herein and shall provide all other miscellaneous and ancillary components necessary to provide a complete and functional aeration air blower and control system, capable of meeting the requirements set forth in this section.

B. TYPE:

Motor driven blowers provided under this section shall be of the multistage centrifugal type with outboard shaft bearings. The blower shall be direct connected to an electric motor driver through a flexible coupling. Included with the blower shall be the drive motor, variable speed drive, blower controls, base, blower enclosure, inlet filter system, surge control system if required, vibration detection system, intake and discharge flexible couplings, valves, and other items as specified.

C. EQUIPMENT LIST:

Item	Blower 1	Blower 2	Blower 3
Inlet Filter	FLT-3041	FLT-3042	FLT-3043
Inlet Filter Silencer	SLR-3041-1	SLR-3042-1	SLR-3043-1
Blower	B-3041	B-3042	B-3043
Vendor Control Panel	CP-3041	CP-3042	CP-3043
Discharge Check Valve	1 (no tag)	1 (no tag)	1 (no tag)
Discharge Isolating Valve	V-3041	V-3042	V-3043

D. PERFORMANCE AND DESIGN REQUIREMENTS:

1. GENERAL: The blowers will provide aeration air for the activated sludge process at the Little River WRF. Oxygen demand will vary in response to the plant flow rate and the wastewater characteristics in the treatment plant's service area and in response to various process parameters. There are two trains in the biological system. Pressure in the aeration air system manifold will be controlled by adjusting the blower's capacity via the variable speed drive.

2. OPERATING CONDITIONS: The blowers will be installed outdoors in a weatherproof, acoustical sound enclosure, which will be ventilated with unfiltered air but will not be climate-controlled. Only the motor control panel with VFD will be located in the electrical room that will be air-conditioned. Ambient temperatures outdoors are expected to range between 10 and 95 degrees F. The blowers will be located at an approximate elevation of 880 feet above sea level. Blower supply air will be drawn from outside the sound enclosure through inlet filters connected to the enclosure.

3. OPERATING REQUIREMENTS: The blowers provided under this section shall meet the following operating requirements:

Rated flow per blower, minimum, scfm	2,000
Rated flow at turndown condition, scfm	900
Discharge pressure, psig	6.4
Discharge pressure at turndown, psig	5.7
Barometric pressure, psia	14.26
Inlet filter loss (max. dirty filter), in. w.c.	3
Pressure at blower inlet flange, psia (Includes inlet losses)	14.15
Maximum inlet temperature, degrees F	95
Relative humidity @ max temp., percent	85
Minimum inlet temperature, degrees F	10
Surge point (summer condition)	
Flow per blower, scfm	760
Discharge pressure, psig	7.65
Minimum shaft brake horsepower, percent	81
Motor speed, maximum operating, rpm	3,600

Motor efficiency, minimum, percent	95
Motor horsepower, maximum, hp	100
Motor full-load power factor, minimum, percent	90
Sound pressure level free field at 3 feet outside the enclosure, max., dbA	85

Noise performance shall be expressed as sound pressure levels (SPL) in decibels as read on the "A" weighting scale of a standard sound level meter (dbA); all measurements shall be made in relation to a reference pressure of 0.0002 microbar.

The blower shall have, as a minimum, 1.25 psi pressure rise to surge from the rated discharge pressure.

4. GUARANTEED OPERATING PERFORMANCE: The blower manufacturer shall provide guaranteed power consumption values for each of the following operating points. Guaranteed power consumption shall include the variable frequency drive and motor losses. This information shall be provided with the contractor's bid for evaluation.

Design Point	Capacity %	Flow scfm	Discharge Pressure psig	Inlet Temp °F	RH %	Guaranteed Power Consumption Hp*
1	100	2,000	6.4	100	90	_____
2	75	1,500	6.4	60	50	_____
3	60	1,200	6.4	60	50	_____
4	45	9,00	6.4	25	40	_____

* To be completed by Blower Manufacturer.

E. MANUFACTURER/CONTRACTOR COORDINATION:

The Contract drawings and specifications depict various components of a multi stage blower system as specified under Section 11486 and the single stage blowers as specified in Section 11485. The drawings depict worst case conditions (size, power requirements, etc.) for both systems. Bidding contractors are to base their bid on the single stage blower (section 11485) but are also to include the cost breakdown for both the single stage blower and the multi stage blower on the bid form. The Owner will select the blower to be provided at the time the Contract is executed. It is the Contractor's and blower manufacturer's responsibility to review the Contract documents and coordinate all changes as necessary to accommodate the equipment provided. All costs for providing either of these systems shall be included within the contractor's bid.

F. CONTROLS:

1. GENERAL: Each blower shall be provided with a free-standing or skid mounted vendor supplied control panel located on or adjacent to the blower enclosure to contain the machine's start/stop, surge, and pressure/volume controls, blower speed, as well as monitoring and safety/shutdown systems. Each blower shall also be provided with a free standing motor control panel that will be installed remotely in the plant electrical room.

Blower control logic shall be as described in Section 17900 with any modifications required to suit the equipment provided. The contractor and blower manufacturer shall review the blower and DO control description as shown on drawing 30-I-604 and 30-I-601 and Specification Section 17900 and note any revisions necessary to suit the equipment provided. The contractor and blower manufacturer shall work with the System Integrator and Engineer to ensure that the control logic for DO and pressure control, blower selection, blower capacity adjustment, acceptable blower operating range to prevent surge conditions, etc., are fully coordinated with the equipment provided.

2. LOCAL CONTROL PANEL:

a. The local Vendor Control Panel (VCP) shall meet the requirements of Section 17110. Unless otherwise specified, electrical control circuits shall operate on 120 volts AC, single phase. Positioning systems for all valves shall operate at 4-20 mA DC. Pneumatically positioned or operated control systems will not be permitted. No motor starters or VFD's shall be provided in the local control Panel. Electrically isolated contacts shall be provided for connection to all external circuits.

b. Each VCP shall be rated NEMA 4X and provided with surge protection as specified in Section 17110. Surge protection shall protect all electrical/electronic devices in the panel. PLC requirements are as specified in Section 17310 and shall be Allen Bradley Compact Logix minimum. A Allen Bradley Panelview Plus, 7.5" color OIT, shall be provided for local indication and control of all blower system alarms and functions. The PLC and OIT shall be supplied with removable compact flash memory that shall contain the vendor supplied programs with back up memory cards. A list of all available alarm, control and monitoring signals with associated memory addresses/tags shall be made available to the Contractor for Integration with the plant MCP and SCADA system. All controls and instruments shall fail into a safe condition. The controls shall be designed for fail safe condition and upon power loss and restoration shall return to the ready mode. The PLC and OIT shall be supplied with removable compact flash memory that shall contain the vendor supplied programs with back up memory cards.

c. Each of the blowers shall communicate with the plant SCADA network via CAT-6 copper link. The communication protocol shall be Allen Bradley Ethernet IP. A network switch shall be provided in each blower control panel, shall be N-Tron or equal, see Division 17 for details. Provide redundant 24VDC power supplies that alarm the PLC on power supply failure.

d. The local VCP shall include as a minimum all control devices as shown on Drawing 30-I-604 and as specified below:

e. The VCP shall contain a surge control system designed by the blower supplier that will evaluate the blower capacity, inlet and outlet temperatures, inlet and outlet pressure, blower motor current and any other instruments required for surge protection. The surge control system shall prevent the blower from operating in or near a surge condition. The system shall send a warning signal to the MCP PLC to indicate the blower is approaching surge condition. A second “surge Imminent” signal will shutdown the respective blower.

f. The local VCP shall provide 120 VAC power supply to the ventilation fan and light for the blower sound enclosure. Each power supply will be provided with fuse protection and local disconnecting means.

3. MOTOR CONTROL PANEL:

a. The Motor Starter VFD shall meet the requirements of Division 11 and 16.The control panel shall be rated NEMA-12 ventilated and filtered and shall accept a 480 VAC, 60 hertz, 3-phase power input.

b. Each blower motor variable speed drive shall meet the requirements specified in section 11069 and shall include a flanged type main disconnect with a minimum of a 44 KAIC rating.

c. The blower motor control panels shall be installed in the plant electrical room. Contractor/Supplier shall review the electrical room plans and note the area allocated for this equipment.

d. 480 VAC power shall be physically separated from 120 VAC control section for arc flash safety.

4. PRESSURE/VOLUME: An external 4-20 mA control signal shall be provided to the local blower control panels to adjust blower output volume in response to process requirements. The control panel shall contain the process controller for adjusting the blower speed in response to the external control signal.

1.02 QUALITY ASSURANCE

A. FACTORY TESTS:

1. GENERAL: Both the blower and the motor shall be subject to witnessed factory tests. All test logs and plotted test results shall be provided and shall be certified correct under penalty of perjury by an officer of the manufacturing corporation.

2. BLOWER PERFORMANCE TEST: The test shall be conducted at constant speed and shall extend from the surge point to not less than 100 percent of design volume at design pressure. The test shall be sufficiently comprehensive to produce guaranteed performance characteristics. The test data shall be employed to produce operating curves showing pressure-capacity, power-capacity, and efficiency capacity curves and surge points for each operating condition specified. Capacity shall be in inlet cfm.

Factory tests shall be performed in accordance with ASME PTC-10, Class II.

The Owner will require a witnessed test. Accordingly, the Contractor shall furnish the Construction Manager with at least 6 weeks' written notification of the time and location of the test. Factory testing more than 100 miles from the job site will require travel and living expenses for the Owner and the Engineers for a total of three (3) people for a minimum of two days for testing.

3. MOTOR TEST: The motor shall be tested as specified in Section 11060 Electric Motors.

4. FUNCTIONAL TESTING: Upon completion of assembly and prior to shipment to the project site, each blower, and motor shall be functionally tested with the VCP connected to all skidded instruments, electric valves, and appurtenances. The test shall simulate field operation from minimum to full capacity. This test shall be performed for the purpose of demonstrating proper assembly and that the equipment functions without adverse characteristics of any kind. The oil lubrication system shall be tested for leaks. All start/stop sequences and all safety and alarm systems shall be tested, simulating start of the blower motor.

Once assembled at the site, during the startup and commissioning phase, the complete blower and aeration system shall be field functional tested with the motors connected and operated from min to full capacity. The field test shall be sufficiently comprehensive to satisfy the Engineer that all components have been assembled on the blower baseplate properly, the subsystems are free from leaks and the main drive and blower vibration are within the manufacturer’s acceptable tolerances.

B. REFERENCES:

This section contains references to the following documents. They are a part of this section as specified and modified. Where a referenced document contains references to other standards, those documents are included as references under this section as if referenced directly. In the event of conflict between the requirements of this section and those of the listed documents, the requirements of this section shall prevail.

Unless otherwise specified, references to documents shall mean the documents in effect at the time of Advertisement for Bids or Invitation to Bid (or on the effective date of the Agreement if there were no Bids). If referenced documents have been discontinued by the issuing organization, references to those documents shall mean the replacement documents issued or otherwise identified by that organization or, if there are no replacement documents, the last version of the document before it was discontinued. Where document dates are given in the following listing, references to those documents shall mean the specific document version associated with that date, regardless of whether the document has been superseded by a version with a later date, discontinued or replaced.

Reference	Title
AISI	Pocketbook of AISI Standard Steels
ANSI H35.1	Alloy and Temper Designation Systems for Aluminum
ANSI/IEEE 112	Polyphase Induction Motors and Generators
ASME PTC-10-97	Power Test Code for Compressors and Exhausters
ASTM A36/A36M	Structural Steel
ASTM A48	Gray Iron Castings
NEMA MG1	Motors and Generators

C. UNIT RESPONSIBILITY:

The Contractor shall assign unit responsibility as specified in paragraph 11000-1.02 C to the blower manufacturer for the equipment specified in this section. A certificate of unit responsibility shall be provided. The blower manufacturer shall provide a certificate of unit responsibility (Form 11000-C in Section 01999) as specified in paragraph 11000-1.02 C.

The Manufacturer shall have at least 10 blower installations in North American municipal wastewater treatment plants in satisfactory operation. In addition, the Manufacturer shall have at least 10 installations in North America in satisfactory operation with dissolved oxygen aeration system control. The manufacturer shall provide a list of these installations along with contact information.

Additionally, the Contractor shall unload, place, install, adjust, test, and perform initial startup of the equipment specified under this section per the manufacturer’s written instructions under the supervision of the Engineer. The Contractor shall cause the responsible equipment manufacturer to supply qualified installation technicians for testing, initial startup, and training for the equipment specified under this section. The Contractor shall furnish an affidavit, signed and notarized as above, attesting that the equipment has been properly unloaded, placed, installed, adjusted, tested, and started in accordance with the manufacturer's requirements for proper operation and acceptable service life. Nothing in these provisions, however, shall be construed as relieving the Contractor of responsibility for the overall quality and completeness of the work.

1.03 SUBMITTALS

The following submittals shall be provided in accordance with Section 01300:

1. A copy of this specification section, with addendum updates included, and all referenced and applicable sections, with addendum updates included, with each paragraph check-marked to indicate specification compliance or marked to indicate requested deviations from specification requirements. Check marks shall denote full compliance with a paragraph as a whole. If deviations from the specifications are indicated, and therefore requested by the Contractor, each deviation shall be underlined and denoted by a number in the margin to the right of the identified paragraph, referenced to a detailed written explanation of the reasons for requesting the deviation. The Construction Manager shall be the final authority for determining acceptability of requested deviations. The remaining portions of the paragraph not underlined will signify compliance on the part of the Contractor with the specifications. Failure to include a copy of the marked-up specification sections, along with justification(s) for any requested deviations to the specification requirements, with the submittal shall be sufficient cause for rejection of the entire submittal with no further consideration.

2. A copy of the contract document control diagrams and process and instrumentation diagrams relating to the submitted equipment, with addendum updates that apply to the equipment in this section, marked to show specific changes necessary for the equipment proposed in the submittal. If no changes are required, the drawing or drawings shall be marked "no changes required". Failure to include copies of the relevant drawings with the submittal shall be cause for rejection of the entire submittal with no further review.

3. Certificate of Unit Responsibility attesting that the Contractor has assigned, and that the manufacturer accepts, unit responsibility in accordance with the requirements of this Section and paragraph 11000-1.02 C. No other submittal material will be reviewed until the certificate has been received and found to be in conformance with these requirements.

4. Manufacturer's catalog data and shop drawings confirming dimensions, weight, construction, and installation details of blower and all associated equipment.

5. Predicted performance curves for the operating requirements specified under paragraph 11486-1.01 D.3 showing pressure-capacity, power-capacity, and efficiency-capacity curves and surge points for each operating condition specified. Capacity shall be shown in inlet cfm. All performance parameters shall reflect site conditions as listed in paragraph 11486-1.01 D.3 for each operating condition. Sample actual test condition

inlet/specified condition acfm conversion calculations shall also be provided.

6. Operating noise levels shall be provided for the motor and blower combination. Noise shall be expressed as sound pressure levels (SPL) in decibels as read on the "A" weighting network of a standard sound level meter (dba); all measurements shall be made in relation to a reference pressure of 0.0002 microbar.

7. Drawing and catalog information detailing all control devices in the control cabinets as well as overall panel layout interconnection diagrams and construction.

8. Spatial requirements, showing clearances required for maintenance purposes.

9. Factory motor test results, per the required NEMA MG1 and IEEE 112, Method B tests, for either the job motor or prototype motor as previously stated.

10. Motor Submittals with following information:

    a. Motor Data Form 11060-A

    b. Running amperes, efficiency and power factor at 25%, 50%, 75%, 100%, 115% and 125% of rated power output.

    c. Locked rotor, full load, and breakdown output torque.

    d. Speed-torque/current curve for both full voltage and reduced voltage starting. Blower load acceleration torque requirements shall be plotted on the same curves.

    e. Maximum connected load inertia for 100% voltage starting.

    f. Acceleration time with maximum inertia load for 100% voltage starting.

    g. Safe stall time for 100% voltage starting (cold start and hot start).

    h. Rotor inertia.

    i. Maximum power factor correction at 25%, 50%, 75%, and 100% of full load.

11. Response curves for all temperature sensors.

12. Guaranteed maximum power consumption.

1.04 SHIPMENT

Equipment shipment, protection, and storage shall conform to the manufacturer's written requirements and Section 01605.

1.05 WARRANTY

In addition to the guarantee specified in the General Conditions, the blower manufacturer shall provide a written warranty to cover the blower package, including the motors and control components, against defects in workmanship and material for a period of three (3) years from the date of start-up. The manufacturer's warranty shall be issued in the Owner's name.

PART 2--PRODUCTS

2.01 ACCEPTABLE PRODUCTS

Blowers shall be multistage centrifugal compressors as manufactured byLamson, Hoffman, or equal, modified to meet specified requirements.

All control panels provided shall be designed, constructed, and tested "in-house" by the Manufacturer. This work shall not be outsourced, the purpose being to ensure quality assurance, control, and testing by the Manufacturer in an ISO 9001 certified shop.

The Manufacturer's machining and assembly shops must be ISO 9001 certified in order to assure conformance to the highest quality standards of the industry.

The equipment detailed in this Section is specified by proprietary name, trade name and/or name of one Manufacturer. These items are so specified for reasons of maintenance and operation, as well as obtaining desirable features best suited to the requirements of the specification and available space in the blower building.

2.02 MATERIALS

Materials of construction shall be as follows:

Component	Material
Casing and bearing housing	Cast iron, ASTM A48, Class 30
Impeller	Cast aluminum, ASTM B26, A355-T6
Shaft	Steel, ASTM A322 Grade 4140CT
Tie rods	Steel, Zinc Plated ASTM A 307 GR 36
Base	Structural steel, ASTM A36

Materials specified are considered the minimum acceptable for the purposes of durability, strength, and resistance to erosion and corrosion. The Contractor may propose alternative materials for the purpose of providing greater strength or to meet required stress limitations. However, alternative materials must provide at least the same qualities as those specified for the purpose.

2.03 EQUIPMENT FEATURES

A. MULTISTAGE BLOWER:

The multistage centrifugal blower shall utilize single piece, cast iron, volute sections which are assembled in sufficient number with the inlet and discharge sections to provide the number of compression stages required to achieve the specified discharge pressure. The complete assembly shall be held together with high strength steel tie rods which shall connect body flanges on the suction and discharge heads. Inlet and discharge connections shall be flanged and oriented and sized as specified. The interstage sealing diaphragm shall be cast as a part of each casing inlet to each stage to ensure proper approach conditions, reduce turbulence, and improve blower efficiency. Shaft end seals shall be lead babbitted labyrinth type. Interstage seals shall be aluminum labyrinth type.

Bearings shall be oil lubricated, anti-friction type sized for an L-10 bearing life of 100,000 hours. Bearing lubrication shall be by constant-level oilers. Bearings shall be mounted in outboard cast iron housings which shall be designed to effect a complete separation between the bearing and the casing to isolate the bearing from the heat generated by the machine. Bearings shall be replaceable without disconnecting any piping or disassembling the machine. Each bearing assembly shall be provided with a thermo-well and replaceable switch type temperature detector.

Impellers shall be keyed to the shaft and held in place by abutting spacers and lock washer assemblies. The rotating assembly shall be statically and dynamically balanced to limit vibration to 1.25 mil (peak-to-peak) when measured on the outboard bearing housing at design speed. Maximum rotor tip speed shall not exceed 400 feet per second. The first critical speed of the rotating assembly shall be not less than 20 percent above the operating speed.

B. MOTOR:

The blower drive motor shall TEFC, 480 volt, 3-phase, 60 Hz, squirrel cage induction type. The motor shall be inverter duty rated and meet the requirements for Type 2 motors as specified in Section 11060. Motors shall be provided with over temperature protection.

C. BASE AND ISOLATION PAD:

The blower and motor shall be connected through a flexible coupling and shall be mounted on a common structural steel base, which shall be designed to keep the unit in proper alignment. The structural steel base shall rest upon an isolation pad. The structural base and its isolation pad shall in turn be mounted upon a concrete equipment pad.

D. ACCESSORIES:

2. INLET FILTER/SILENCER AND FLEXIBLE CONNECTOR: Each blower shall be provided with an inlet filter/silencer designed for maximum air flow at absolute minimum pressure drop. Blower inlet filter silencers shall be two-stage, dry type filters housed in a steel, multi-element holder designed to dampen noise. Inlet filter silencers will be used to filter the air supplied to centrifugal air blowers to protect the blowers specified in this section. Elements used shall be easily replaceable and shall be bound in holders designed for installation outdoors. Elements shall be protected from rain. Inlet filter silencers shall be manufactured by American Air Filter, Dollinger, or equal. 99.5%

The silencer housing structural frame shall be hot-dipped galvanized. Legs shall be adjustable for vertical positioning and leveling.

Filter system shall have a minimum efficiency of 99.9% on particles 2 micron in size and larger. Maximum clean filter pressure drop of the inlet filter/silencer with the elements installed shall be 1.0 inches w.c. Maximum pressure drop with dirty inlet filters shall be 3.0 inch w.c.

The inlet filter/silencer shall be installed by the Contractor and connected to the blower inlet via the flexible connector provided.

2. DISCHARGE CHECK VALVE: The blower shall be supplied with a discharge check valve suitable for use in the service specified and capable of providing an airtight seal upon closure with minimum pressure loss when open. The check valve shall be of the double disc, center pivot type, constructed of 316 stainless steel and viton sealing materials, specifically designed and suitable for the operating conditions and test pressures specified. All components shall be suitable for use with air temperatures as great as 300 degrees F. Valves shall be techno check, or equal, modified to meet specified requirements.

3. PRESSURE UNLOADING VALVE: The blower system shall be provided with a pressure unloading valve to allow main pipeline pressure unloading when required. The butterfly valve shall be wafer type with cast iron body, ductile iron disc, EPDM seat and suitable for air service up to 300 degrees F. The valve actuator shall be the Manufacturer's standard design, motorized, 480VAC, modulation, fast acting - open/close in fifteen (15) seconds or less, include limit switches, 4-20mA position feedback, local controls and manual hand-wheel. Automatic controls for the valve shall be located in the plant Master Control Panel. The valve/actuator assembly is provided for field installation and wiring by the Contractor.

4. BLOW-OFF (BYPASS) SILENCER: The blower by-pass valve shall be provided with a discharge blow off silencer suitable for installation at the blow-off valve. The silencer shall be selected to limit pipeline noise to not more than 90 dbA 3 feet from the blow off exhaust. The silencer shall be model number B21-10 manufactured by Stoddard Silencers, Universal Silencer SU5 or approved equal.

5. COUPLING AND GUARD: Each blower shall be directly coupled to the electric motor through a dry type spacer coupling. An OSHA approved coupling guard of heavy gauge steel shall be included, bolted solidly in place.

6. EXPANSION JOINTS: Single arch, flexible rubber expansion joints as specified in paragraph 15090-2.01 B shall be provided by the blower manufacturer at the suction and discharge connections to the blower and for the bypass piping as specified.

7. SOUND ENCLOSURE: Provide an outdoor rated sound enclosure free standing or integral to the skid as required to reduce the blower sound levels to the specified requirements. The enclosure can contain the inlet filter system if practical. The enclosure shall be made of painted steel and include multiple removable panels to provide ease of access to the various compressor components.

A thermostatically controlled ventilation fan shall be provided for the enclosure. Fan shall be selected by the blower system manufacturer to provide adequate cooling for the blower system. Fan shall be 120 Volt.

Transparent windows shall be provided where necessary for inspection of critical instruments or maintenance points.

A light shall be provided at each end of the enclosure to provide suitable lighting for ease of maintenance of the blower system components.

Washable air filters, and stainless steel screens shall be provided over all enclosure openings.

Power for the enclosure lightsa and ventilation fan shall be provided from the Vendor Control Panel.

E. INSTRUMENTS:

1. GENERAL: As a minimum requirement, each blower shall be provided with a discharge pressure gage, temperature sensors for blower and motor bearings, vibration sensors, and a motor current ammeter.

The pressure gage, bearing temperature sensors, and vibration sensors shall be mounted as recommended by the blower manufacturer and as specified in this section.

All blower instruments shall be field calibrated and tested under actual operating conditions by the blower manufacturer.

2. PRESSURE GAGE: The pressure gage shall be 4 1/2-inch premium grade, glycerin filled unit of the bourdon-tube element type and shall be mounted on the blower's output nozzle. It shall have 270-degree filled stainless steel movement, phenolic case, shatterproof glass window, and 1/2-inch NPT process connection. Uncertainty shall be no greater than 1/2 percent of span. All exposed metal parts shall be 100-percent stainless steel. Scale shall be 0-15 psig in 0.25 psi increments.

3. BLOWER AND MOTOR BEARING TEMPERATURE MONITORING SYSTEM: Each blower and blower motor shall be provided with a complete temperature monitoring system for each bearing consisting of separate switch-gages mounted in the control cabinet. Switch-gages shall provide a constant visual indication of bearing temperature and have a reset drag pointer which remains at the maximum temperature reached. Each switch-gage shall be provided with a normally closed contact, rated 4 amps at 115V AC. Switch-gage contacts shall be wired in series to open the circuit when either bearing exceeds a preset bearing temperature. Bearing temperature setting shall be selected by the blower and motor manufacturers and shall indicate impending bearing failure. Bearing temperature alarm shall be indicated on the local control panel.

4. BLOWER VIBRATION MONITORING SYSTEM: Two low impedance, velocity response, piezoelectric accelerometers shall be provided per blower. These sensors shall be mounted directly on the blower bearing housings and shall be wired to the control cabinet. A sensor fault light shall be provided to indicate a break in the wiring or a sensor failure.

Each blower shall be provided with two vibration transmitters with 4-20mA output. Both meters shall be scaled 0 to 5 mils. A 30-second factory set, adjustable timer that is energized by the blower starter shall prevent a warning or shutdown action from occurring during start-up. A 6-second alarm and shutdown delay shall be provided to prevent transient vibrations from causing a nuisance alarm or shutdown. A 2-mil displacement shall set a warning alarm; a 3-mil displacement shall set a shutdown and alarm.

5. PRESSURE AND TEMPERATURE MONITORING SYSTEM: Temperature and pressure sensors/transmitters shall be provided on the inlet and discharge of the blower system. Sensor shall be the manufacturer's standard for this application; the pressure and temperature transmitters shall be Smart, indicating type, Endress & Hausser or equal.

F. CONTROLS AND ELECTRICAL:

1. GENERAL: As a minimum requirement, each blower shall be provided with the following instrumentation:

a. Inlet and discharge air temperature transmitter,
b. Filter differential pressure indicator/transmitter
c. Inlet and discharge pressure transmitter
d. Discharge pressure gauge
e. Oil temperature transmitter
f. Oil temperature gauge
g. Oil low level switch
h. Motor current Transmitter
i. Blower vibration transmitters
j. Blower bearing temperature transmitters
k. Elapsed time meter, hours
l. Motor protective devices per Section 11060.

2. SAFETY SHUTDOWN: Safety shutdown circuits shall be provided for the following:

a. Surge

b. Excessive vibration

c. High blower bearing temperature

d. High motor bearing temperature

e. High motor winding temperature

f. Motor overcurrent--If motor current rises to 100-percent nameplate rating, the unit shall shutdown according to the emergency shutdown sequence.

Manual controls shall be provided on the front of the cabinet to permit manual start-up and shutdown of the blower, thereby overriding the automatic controls.

2.04 SPARE PARTS

The following spare parts shall be provided, tagged, and stored in accordance with paragraph 11000-2.12.

4 Complete replacements, air filters.

1 Complete set of bearings.

1 Set of all tools required for maintenance, if special. Tools shall be supplied in an all-metal box on castered wheels. The box shall be fitted with a lock hasp and shall be stencil lettered with the name of the Owner and the words "Aeration Blower Tools." Tools shall be Proto or equal and shall be engraved with the Owner's name and the words "Aeration Blower."

10 of each type fuse.

10 of each type relay.

1 of each type (120 VAC and/or 480 VAC) surge suppressor

2.05 PRODUCT DATA

The following information shall be provided:

1. Certified results of factory blower and motor tests including test logs as specified in paragraph 11486-1.02 A.

2. Certified performance curves for each unit based upon pressure-capacity, power-capacity, efficiency-capacity curves, and surge points.

3. Certification that blowers operate under first critical speed in accordance with the requirements of paragraph 11486-2.03 A.

4. Motor product data as specified in paragraph 11060-2.05.

5. Certified balancing test logs.

6. Operator and maintenance information as specified in Section 01730.

7. Installation Certification Form 11000-A specified in paragraph 11486-3.01.

8. Training Certification Form 11000-B specified in paragraph 11486-3.03.

PART 3--EXECUTION

3.01 INSTALLATION

The blower shall be aligned, connected, and installed by the Contractor in accordance with the manufacturer's recommendations and the requirements of Sections 11002 and 11005. After completion of the initial run-in and final alignment, all components shall be dowelled to the base in accordance with the manufacturer's startup specialist. The installation shall be certified on Form 11000-A.

3.02 START-UP AND TESTING

The equipment provided under this section shall be started and tested only under the direction of personnel provided by the equipment manufacturer. To that end, the Contractor shall cause the manufacturer to furnish start-up and testing specialists' factory trained in the proper procedures for initial installation, initial testing, and commissioning of the equipment. All such activities shall be performed under the direction of these specialists. This provision, however, shall not be construed as relieving the Contractor of overall responsibility for this work.

The Manufacturer shall furnish experienced start-up/service personnel to inspect the final installation and supervise the field start-up tests of the equipment. The services shall be provided for a minimum of two (2), eight-hour (8-hr.) days for each unit divided in three different trips. If there are difficulties in operation of the equipment due to the Manufacturer's fabrication or Contractor's installation, additional service shall be provided at no extra cost to the Owner.

A. FIELD SERVICES:

Provide, as a minimum, the following field services:

1. Verify proper connection of piping and installation of accessories

2. Field precision alignment of the motor, blower, and coupling

3. Check leveling of blower base

4. Confirm proper wiring of all instruments and field wired items

5. Run motor uncoupled for up to one-half (1/2) hour to verify motor operation and check magnetic center for proper marking/location

B. FIELD TESTING:

1. GENERAL: Field demonstration testing shall be conducted after the installation of all equipment has been completed and the equipment has operated for a sufficient period to make all desirable corrections and adjustments. The Contractor shall schedule testing with the full knowledge and consent of the Owner and shall ensure no adverse affect on the operation of plant facilities.

As a condition precedent to final acceptance of the equipment, the blower manufacturer's representative shall adjust all blower pressure/volume controls to obtain the same motor power reading from each blower at the maximum control signal. Completion of this requirement shall be witnessed by the Engineer.

2. BLOWER FIELD TESTING: Test procedures shall conform to the requirements of Section 01660 and those specified here. They shall contain the following features:

d. Static tests of all control and protective circuits.
e. Not less than 2 cold starts.
f. Not less than 24 hours of continuous operation at full load.

A minimum four (4) hour field run test for each machine shall demonstrate that, under all conditions of operation, each unit:

a. Has not been damaged by transportation or installation

b. Has been properly installed

c. Has no mechanical defects

d. Has fully functional instrumentation, properly calibrated and set

e. Will start, run, and stop in the prescribed manner

f. Will run through the entire range of specified pressure and flow

g. Has the proper shutdown sequence of standard stop, soft stop, and emergency stop

h. Is free of overheating of any parts

i. Is free of objectionable vibration and noise

j. Is free of overloading of any parts

k. Demonstrates the simultaneous and continuous efficiency optimization by altering the inlet guide vane position based on inlet temperature, differential pressure, and capacity

3. AERATION SYSTEM FIELD TESTING: Conduct a minimum of four (4) hour field run test of the aeration system instrumentation, controls, and valves. The test shall demonstrate the following:

a. The air header pressure control loop will automatically control on-line blowers in a stable, cascade and base load mode of operation.

b. Air flow control loop maintains the proper air flow to each aerated cell based on DO.

c. The DO control loop maintains a pre-set DO level in each aerated cell.

d. The entire aeration system of blowers, air flow control valves, and instrumentation operates in a stable fashion and maintains DO at operator set levels in the aeration cells.

3.03 TRAINING

The Contractor shall cause the equipment manufacturer, as part of the commissioning services, to provide not less than 2 days of on-the-job training, following start up of the first blower unit. Period for training services shall be in addition to the period for start up services specified in this section. Training may be combined with a start up trip, however if startup is unsuccessful for any reason and equipment is not fully operational during startup, training shall be reserved for a later date when the equipment is fully and continuously operational. If there are difficulties in operation of the equipment due to the Manufacturer’s fabrication or Contractor’s installation, additional service shall be provided at no extra cost to the Owner.

Training shall conform to the requirements of Section 01664 and shall be certified on Form 11000-B as specified in Section 01999. Training shall include the requirements of Section 01664 and the following:

1. Centrifugal blower theory.

2. General operational information for the specific equipment provided under this section.

3. Operation of the equipment in automatic and manual modes.

4. Troubleshooting.

5. Routine maintenance.

This provision, however, shall not be construed as relieving the Contractor of overall responsibility for this portion of the work.

END OF SECTION

SECTION 11530

LABORATORY EQUIPMENT

PART 1 - GENERAL

1.1 SUMMARY:

A. Work of this section includes laboratory equipment.

B. Related work specified elsewhere:
1. Plumbing.
2. HVAC.

1.2 SUBMITTALS:

A. Product data: Indicate material types, finishes and sizes, fabrication and installation details and requirements.

1.2 DELIVERY, STORAGE AND HANDLING:

A. Deliver equipment in protective packaging.

B. Store in packaging to prevent soiling and physical damage.

C. Handle to prevent damage to finished surfaces and operating mechanisms.

1.3 PROJECT/SITE CONDITIONS:

A. Protection: Protect prefinished surfaces from damage or staining. Following installation, provide protective covering for duration of project.

B. Coordinate installation of equipment required to be built into building structure. Secure templates or lay out to rough dimensions provided by equipment manufacturer.

1.4 WARRANTIES:

A. Provide manufacturers warranties on each piece of equipment beginning on Date of Certificate of Completion.

PART 2 - PRODUCTS

2.1 LABORATORY EQUIPMENT:

A. The basis of design for laboratory equipment is scheduled on the drawings. Laboratory equipment of similar design and construction, as manufactured by other manufacturers, may be submitted for Architect's consideration. Acceptance is subject to compliance with specified design criteria, as evidenced by submittal of specified product data, and Architect’s approval.

PART 3 - EXECUTION

3.1 INSTALLATION:

A. Install equipment in accord with manufacturer's product data, plumb, level and true to line and location.

B. Uncrate and set equipment in place, or install as indicated. Level units, clean finishes and test all functions to ensure proper operation.

C. Coordinate installation of equipment with plumbing and electrical work.

D. Perform final electrical connections under requirements of Division 26, Electrical and final plumbing connections under Division 22, Plumbing.

E. Protect prefinished surfaces and glass from damage or staining. Clean surfaces and polish glass both sides just prior to Date of Substantial Completion.

END OF SECTION

SECTION 11737

ULTRAVIOLET DISINFECTION EQUIPMENT

PART 1--GENERAL

1.01 DESCRIPTION

A. SCOPE:

This section specifies equipment and support services for an ultraviolet (UV) disinfection system to be furnished and installed within parallel concrete channels for the Little River WRF. The UV disinfection system shall be capable of disinfecting secondary effluent to meet the current Georgia Reuse Water Quality Standards.

The UV System shall be based on the use of low pressure, high output (LPHO) UV mercury / indium amalgam lamps to accomplish the specified objectives. Conventional low pressure or medium pressure lamps will not be acceptable.

The Contractor is responsible for the cost of any changes, including redesign, resulting from UV disinfection system equipment-related changes, including but not limited to changes to the following: channels physical dimensions, equipment pads, equipment panels, equipment panel locations, and equipment interconnections. The UV disinfection system shall fit within and be fully functional under the physical, mechanical, and electrical constraints provided in the Contract Documents.

The drawings included in the Contract Documents for the UV disinfection system are functional in nature and do not show exact locations of equipment or interconnections between equipment. The drawings reflect information provided by only the manufacturer(s) listed in paragraph 11737-2.01.

The UV System Supplier (UVSS) shall be responsible for the following:

1. Design and performance of the UV System and shall comply with all unit responsibility requirements of this specification.

2. Detailing the interconnecting power, control, instrument, data-communication wiring and their raceways including the required accessories and equipment system components furnished under this contract.

3. Installation assistance, commissioning, functional testing, and performance testing as specified in this Section.

4. Classroom and on-site training to instruct the facility operations staff in the necessary procedures to operate and maintain the equipment.

5. Coordinating with the Contractor designated by the Owner to assure complete compatibility of the UV System control hardware and software with the control systems provided for the overall facility.

6. Warrant the system in accordance with the warranty requirements of this Section to meet the performance requirements and other operating criteria listed in this Section.

7. UVSS shall be responsible for all cabling, conduit and electrical terminations between the ballasts and UV lamps.

The UV disinfection system shall include:

1. A minimum of two UV banks with UV lamps divided into modules with ballast assemblies
2. Power Distribution Centers
3. System Control Center panel, monitored by the Plant Control system
4. Level monitor and controls including automatic level control gate
5. UV irradiance intensity detectors
6. Electrical support equipment
7. Harmonic filters or reactors, as required to meet the IEEE 519 voltage and current total harmonic distortion (THD) at UV power source input
8. Structural and mechanical support equipment
9. Appurtenances as specified or required for a UV disinfection system to be a complete and workable system

B. TYPE:

The UV disinfection equipment shall be of the horizontal lamp, open channel type, with electronic ballasts and an automatic in-place mechanical cleaning system, employing automatic level control. The lamps shall be low-pressure, high output (LPHO) mercury/indium amalgam lamps. The UV disinfection modules shall have electronic ballasts suitable for remote installation or housed in a NEMA 6P stainless steel or anodized aluminum enclosure suitable for occasional temporary submersion by the treated effluent.

C. EQUIPMENT LIST:

Item	Trojan (Wedeco) Equipment Number
UV System Control Center (Panel: NEMA-12 for both Trojan and WEDECO installed in UV enclosure)	VCP-5100
UVM Power Distribution Center 1 (NEMA-4x for Trojan installed over the channel) (NEMA-12 for WEDECO installed in the UV enclosure)	VCP-5111

Item	Trojan (Wedeco) Equipment Number
UVM Power Distribution Center 2 (same as PDC-1)	VCP-5112
UV Bank 1	UV-5111
UV Bank 2	UV-5112
UV Level Monitor	LSH-5113
UV Transmissivity Monitor	AE/AIT-5111 (N\A)
UV Intensity Monitor (Bank 1)	RE-5111 (NA)
UV Intensity Monitor (Bank 2)	RE-5112 (NA)
UV Wiper Air Compressor 1 with control panel with combination motor starter (if required for cleaning apparatus)	Wedeco Only
UV Air Compressor Receiver (if required for cleaning apparatus)	Wedeco Only
Hydraulic Systems Center	VCP-51XX
Level Control Gate	MME-5113
Level Devices per 11737-2.03 L	LSH-5113
Uninterruptible Power Supply per 11737-2.03	UPS

D. DESIGN REQUIREMENTS:

The membrane effluent will have been screened, degritted, treated in an extended aeration activated sludge system, and filtered through a 0.4 micron membrane filtration system prior to flowing to the UV system for disinfection.

The UV disinfection system shall consist of equipment installed in parallel channels, equipped with a minimum of two banks of lamps in each channel. Each channel shall have one duty and one standby bank capable of treating half the design flow listed in Table 1. The UV disinfection system shall produce effluent that meets the disinfection requirements provided in Table 1.

Table 1. UV Disinfection Design Criteria

Item	Design condition
Influent Source	MBR Permeate
Monthly Average 5-day BOD, mg/L	<10
Weekly Average 5-day BOD, mg/L	<45
Monthly Average TSS, mg/L	<20
Weekly Average TSS, mg/L	<35

Average daily flow, mgd	2.1
Maximum daily flow, mgd	6.0
Peak hour flow, mgd	7.5
Maximum month flow, mgd	3.3
Wastewater Temperature, degrees C	
Maximum	86
Minimum	55
UV transmittance at 253.7 nm, %	65
Lamp fouling factor (includes 92% quartz sleeve transmission factor), %	83
Lamp aging factor (end of lamp life), %	70
Maximum head over finger weirs/launders/gates downstream from UV system, inches (Wedeco)	1.13 (X.XX)

The UV disinfection system shall consist of parallel channels, equipped with two banks of lamps in each channel. The design intent is to provide redundancy to allow complete disinfection at the peak hour flow (7.5 mgd) with one channel out-of-service.

The UV disinfection system layout shown in the Contract Drawings is based on a Trojan Technologies Inc. UV Disinfection System as specified in this Section. However, this shall not be construed as an endorsement of a particular manufacturer's product, nor shall it be construed that manufacturer standard equipment or products will comply with the requirements of this section. The selected UV Disinfection System shall produce a maximum water surface elevation upstream of the complete UV Disinfection System of 906.15 feet, at a peak hour flow rate of 7.5 mgd. The top of the wall on the UV channel shall be maintained at elevation 908.00. The downstream wet well height shall be maintained at elevation 905.03 feet. The bottom elevation, the length, and the width of the UV disinfection channel may be revised to accommodate the selected UV disinfection system. The minimum UV disinfection channel width shall be 1 feet 8 inches. The Contractor shall be responsible for all costs associated with revising the channel configuration to accommodate the selected system. The UV disinfection system configuration is outlined in Table 2.

Table 2. UV Disinfection System Configuration

Item	Value
Current channel maximum hydraulic capacity with 2 banks per channel, mgd	7.5
Number of channels	2
Channel dimensions[a]	
Length, feet	[a]

Depth, inches	[a]
Minimum Width, inches	20.0
Water depth upstream of lamp banks, inches	[a]
System arrangement	
Number of banks per channel	2
Number of control centers	2
WEDECO System, Maximum headloss at 7.5 mgd per channel and 2 lamp banks per channel, inches[b]	TBD
Trojan System, Maximum headloss at 7.5 mgd per channel and 2 lamp banks per channel, inches[b]	TBD

[a] Channel dimensions are to be provided by UVSS.

[b] Headloss includes UV lamps and submerged appurtenances, baffle plate and entrance losses. Headloss does not include loss over UV system effluent finger weirs/launders/gates.

E. HYDRAULIC TESTING / CALCULATIONS:

The UVSS shall have an independent laboratory prepare and submit hydraulic analysis of the proposed UV disinfection system, based on test work on an operating system of similar size and flow rate. The test unit used in the development of the hydraulic analysis information shall be of the type proposed for the full-scale installation, including lamp size, orientation, and ballast type.

The hydraulic analysis report shall document the degree of plug flow, dispersion characteristics, head losses and actual retention time, and include a description of the test facility, sampling procedures and calculation methods. Extrapolations from the physical model studies supporting the calculations shall be in accordance with accepted modeling practices. The report setting forth the results of the studies and the recommendations arising there from shall be signed by a professional registered engineer.

F. PERFORMANCE REQUIREMENTS:

The UV disinfection system shall produce treated effluent at peak flows meeting the following disinfection criteria in accordance with A.A.C R18-11-305.B:

Parameter	Value
Fecal coliform, single day maximum	Less than 100 per 100 ml
Fecal coliform, monthly geometric mean	Less than 23 per 100 ml

G. OPERATING REQUIREMENTS:

1. The UV dose produced by the system shall not be less than 65,000 µW-s/cm^2 measured in an effluent with a 65 percent UV transmission at 253.7 nm. This dosage shall be at a

peak hourly flow with a water temperature of 15 degrees Centigrade per EPA UV DIS 3.1 requirements. Dosage calculations shall be based on the time at the end of 12,000 hours of operation for the operating conditions listed in this Section.

2. The flow characteristics through the system shall closely simulate ideal plug flow conditions under the full operating flow range.

3. The flow through the systems shall be turbulent with a Reynolds Number greater than 4,000 at average flow.

4. The ultraviolet system shall be capable of operating continuously, except for minor periods of downtime for module replacement.

5. Maximum total harmonic distortion (THD) of the UV Disinfection System shall not exceed 5 percent as set forth in IEEE 519-1992, Table 10.2, at the point of common connection. For this system, the point of common connection shall be the associated with the main circuit breaker the 480-volt switchboard in the Blower Building Electrical Room. THD shall be determined by use of equation 8.13 of IEEE 519-1992.

6. Start-up after loss of power: The UV system shall start-up and shall be fully operational within 5 minutes of power being restored to the system from the normal power supply if the water temperature of the effluent is above 15 degrees Centigrade.

1.02 QUALITY ASSURANCE

A. REFERENCES:

This section contains references to the following documents. They are a part of this section as specified and modified. In the case of conflicts between the referenced documents and the requirements of this section, the requirements of this section shall prevail.

Reference	Title
ANSI C62-41 (IEEE 587)	Transient Protection
ANSI C78-1	Lamp Starting
APHA (Standard Methods)	Standard Methods for the Examination of Water and Wastewater, 17th Edition
ASTM A36/A36M-89	Structural Steel
ASTM A276-89	Stainless and Heat Resisting Steel Bars and Shapes
IEC 555-2	Harmonic Standard for ballast harmonic content.
EPA/625/1-86/021	Design Manual for Municipal Wastewater Disinfection
IEEE 519-1992	Recommended Practices and Requirements for Harmonic Control in Electrical Power Systems

Reference	Title
NEC	National Electrical Code
NEMA 250	Enclosures for Electrical Equipment
UL 508	Industrial Control Equipment
UL 935	Ballast Safety

B. UNIT RESPONSIBILITY:

The Contractor shall assign unit responsibility to the UVSS for the design, manufacture, factory testing, shipping, coordination of installation, commissioning, field testing, operator training, and provision of related operations and maintenance manuals. The UVSS shall furnish all equipment and services and required for proper operation of the system. A certificate of unit responsibility shall be furnished.

C. GUARANTEED PARTS PRICES: (NOT USED)

D. FACTORY TESTS

All major system components shall be factory tested for compliance with the construction and functional requirements specified herein. The control system shall be tested for routine alarm and failure modes to assure the system has been debugged and is free from defects. A report of the results of these tests shall be submitted in writing to the Owner for each bank and control panel separately, prior to shipment.

1.03 SUBMITTALS

The following submittals shall be provided as specified in Section 01300.

1. Certificate of Unit Responsibility Assignment attesting that the Contractor has assigned unit responsibility in accordance with the requirements of this section and paragraph 11000-1.02 C. No other submittal material will be reviewed until the certificate has been received and found to be in conformance with these requirements.

2. A copy of the contract document control diagrams and process and instrumentation diagrams, with addendum updates that apply to the equipment in this section, marked to show specific changes necessary for the equipment proposed in the submittal. If no changes are required, the drawing or drawings shall be marked "no changes required". Failure to include copies of the relevant drawings with the submittal shall be cause for rejection of the entire submittal with no further review.

3. A copy of this specification section, with addendum updates included, and all referenced and applicable sections, with addendum updates included, with each paragraph check-marked to indicate specification compliance or marked to indicate requested deviations from specification requirements. Check marks (✓) shall denote full compliance with a paragraph as a whole. If deviations from the specifications are indicated, and therefore requested by the Contractor, each deviation shall be underlined and denoted by a number in the margin to the right of the identified

paragraph, referenced to a detailed written explanation of the reasons for requesting the deviation. The Owner shall be the final authority for determining acceptability of requested deviations. The remaining portions of the paragraph not underlined will signify compliance on the part of the Contractor with the specifications. Failure to include a copy of the marked-up specification sections, along with justification(s) for any requested deviations to the specification requirements, with the submittal shall be sufficient cause for rejection of the entire submittal with no further consideration.

4. Manufacturer and manufacturer's type designation.

5. Manufacturer's catalog data and/or other information-demonstrating conformance to specified design, material and equipment requirements.

6. Shop drawings showing installation requirements, critical dimensions, and clearances required for maintenance purposes. General arrangement drawings should be included showing specific requirements for influent and effluent channels and interconnecting piping.

7. Wiring diagrams as specified herein.

8. Panel layout diagrams including circuit diagrams, schematics, and manufacturing details.

9. Power Distribution Center and System Control Center layout diagrams including circuit diagrams, schematics, and manufacturing details.

10. Programmable logic controller (PLC) equipment documentation including the WWTP UV System application program, Operator Interface Station documentation including color graphic displays. Include O&M manual.

11. Materials and spare parts lists including the cost data on replacement lamps and other maintenance materials or components.

12. Calculations of system hydraulic characteristics, including headloss and flow regime, as described in paragraph 11737-1.01 E.

13. Sizing calculations for each design condition using UVDIS 3.1 model shall be provided.

14. UV Disinfection System Warranty and Service Agreement, signed and dated by the UVSS.

Factory and field testing results verifying that the system meets the maximum total harmonic distortion requirements as specified in paragraph 11737-1.01 G.5.

1.04 ENVIRONMENTAL CONDITIONS

The UV System Control Center and harmonic distortion mitigation equipment shall be located outdoors in a UV system enclosure. For the WEDECO System the power distribution center, wiper-system compressor, wiper-system compressor receiver and wiper-system

compressor panel shall be installed outside, under the membrane gallery canopy. For the Trojan system the Hydraulic System Center shall also be installed in a UV enclosure. The remainder of the UV system components shall be installed outdoors. The ambient temperatures at the project site range from 10-degrees to 105-degrees Fahrenheit. Relative humidity ranges from 20 to 100 percent. Approximate elevation is 908 feet above mean sea level.

1.05 ELECTRICAL ASSEMBLY LABELING

All electrical and electronic assemblies shall be certified by one of the following testing laboratories: UL 508, ETL, or CSA, if manufactured in Canada for export to the US.

All components shall be listed for assembly under the appropriate label. UVSS shall be responsible for all costs associated with the certification.

1.06 WARRANTY/GUARANTEE

A. GENERAL:

All components, materials, and workmanship furnished under this section shall be guaranteed to be free from defects for a warranty period of 12 months starting at the date of Certification of Substantial Completion. During this warranty period, the UVSS shall, within 14 days of the receipt of notice from the Owner regarding defective components, material or workmanship make good all defective material and workmanship without cost to the Owner.

B. LAMPS:

The lamps furnished under this section shall be guaranteed for a minimum of 12,000 hours operating time on a prorated basis. If lamp failure occurs before 4,380 hours of normal operating time, the UVSS shall send a replacement lamp free of charge to the Owner. If lamp failure occurs, after 4,380 hours of normal operating time, the UVSS shall issue a credit to the Owner proportional to the hours not used.

C. BALLASTS:

The ballasts furnished under this section shall be guaranteed for a minimum of 5 years of continuous service under normal operating conditions. Any electronic ballasts that fail before they have reached the end of their five year (43,800 hours of operation) guarantee period shall be replaced by the UVSS on a prorated basis. All shipping and handling costs shall be incurred by the UVSS. This guarantee shall include an allowable ballast failure rate of 2 percent per year.

D. CLEANING DEVICE:

The cleaning device in contact with the quartz sleeves shall be guaranteed for a minimum of two years of normal operation. If failure of the cleaning devices occurs before two years of normal operating time, the UVSS shall issue a credit to the Owner proportional to the hours not used. Cleaning devices in contact with the quartz sleeves shall be covered by this warranty for the life of the UV system.

E. UV MODULE WIPING SYSTEMS:

The UV module wiping systems shall be guaranteed for a minimum of one years of normal operation. If failure of the UV module wiping systems occurs before one year of normal operating time, the UVSS shall issue a credit to the Owner proportional to the hours not used.

F. PLC SOFTWARE:

The UVSS shall provide the Owner with a two-year PLC software warranty relating to providing solutions to system problems related to the original installation. The UVSS shall provide a hard copy as well as an electronic CD-ROM copy of the re-documentation of the system software to the Owner upon completion of changes.

G. PERFORMANCE:

The performance of the UV system as specified herein shall be guaranteed for a period of two (2) years from the date of the Certificate of Substantial Completion. If at any time during the guarantee period the performance of the equipment is substandard, the Owner shall issue a written Notice of Non-Compliance to the UVSS.

The notification shall include all necessary information on site conditions, effluent water quality, and equipment status. The Owner shall include confirmation that the system has been operated according to the approved Operation and Maintenance Manuals. If it is clear that the Owner has operated the system in accordance with the approved O&M Manuals and that the effluent water quality does not exceed that specified herein, then the UVSS shall be given a maximum of 14 days to troubleshoot and resolve the problem that created the Non-Compliance.

If the UVSS is unable to remedy the problem within 14-days, the UVSS shall furnish whatever additional parts and labor, including design and installation, are required to produce disinfected effluent meeting the requirements of this Section.

1.07 DRAWINGS

A. GENERAL:

The drawings included in this project manual are functional in nature and do not show exact locations of equipment or interconnections between equipment. Detailed construction drawings as specified below shall be provided. Drawings shall be prepared on 11-inch by 17-inch drafting media.

Drawings shall have borders and title blocks identifying the project, system, original date, revisions to the drawing, and type of drawing. Each revision of a drawing shall carry a date and brief description of the revisions.

B. CONNECTION DIAGRAMS:

Connection diagrams for panels shall be provided. Connection diagrams shall show components of a control panel in an arrangement similar to the actual layout of the panel. Internal wiring between devices within the panel shall be shown on these diagrams. Connection diagrams shall show all terminal blocks whether used for internal or field wiring. Those used for field wiring shall be clearly identified as such. Wiring diagrams shall indicate insulation color code, signal polarities, and shall show wire numbers and terminal block numbers.

C. ELEMENTARY DIAGRAMS:

Elementary diagrams shall be provided for each panel. Elementary diagrams shall consist of a schematic representation of the logic functions performed within the panel in a ladder logic format. Elementary diagrams shall show all internal and field devices associated with the panel. Elementary diagrams shall show insulation color code, signal polarities, wire numbers and terminal block numbers for all internal and external wiring.

The calibration and set point data for all devices shall be shown.

D. INTERCONNECTION DIAGRAMS:

Interconnection diagrams shall be provided for field wiring and indicate panels, cabinets, and associated field devices. Wire numbers, cable numbers, raceway numbers, terminal box numbers, panel numbers, and field device tag numbers shall be shown.

PART 2--PRODUCTS

2.01 ACCEPTABLE PRODUCTS

The UVSS shall have twenty low pressure, high output (LPHO) UV disinfection systems larger than 2 MGD peak flow currently disinfecting secondary wastewater effluent in the United States.

LPHO UV disinfection equipment for this project shall be manufactured by Trojan Technologies or equal.

2.02 MATERIALS

Materials of construction shall be as follows:

Component	Material
Module frames	ASTM A276 Type 316 stainless steel
Quartz sleeve	Type 214 clear fused quartz
Sleeve retaining O-ring	Buna-N (Nitrile)
Electronic ballast enclosure	ASTM A276 Type 316 stainless steel (NEMA 6P) outdoors near the channel and UV light modules or

Component	Material
	(WEDECO: NEMA-12 cabinets in the indoor UV enclosure: a. Provide power components in cabinet. b. Provide control component including PLC and OIS in separate cabinet)
Lamp end sleeve nut	ASTM A276 Type 316 stainless steel.
Power distribution center enclosure	ASTM A276 Type 316 stainless steel outdoors near the channel and UV light modules
Harmonic mitigation equipment	NEMA 12 indoor cabinets inside the UV enclosure
System Control Center - panel enclosure	ASTM A276 NEMA 12 inside the UV enclosure

2.03 EQUIPMENT

A. LAMP ARRAY CONFIGURATION:

The lamp configuration within each UV bank shall be uniform with all lamps parallel to each other and to the direction of flow in the channel. Lamps shall be equally spaced in horizontal and vertical rows with centerline spacing equal in both directions. Centerline spacing shall be uniform and continuous throughout the channel.

The system shall be designed so that the full length of each lamp is fully immersed in the effluent, including the lamp and both electrodes. Both lamp electrodes shall operate at the same temperature and be cooled by the effluent.

B. UV MODULES:

Each UV module shall be a separate component. The UV lamp arrays shall have a minimum of one row of lamp assemblies, each row with a minimum of four parallel mounted UV lamp assemblies. Each lamp shall be enclosed in an individual quartz sleeve, one end of which is closed and the other end sealed by a Viton seal and compressed O-ring. Each UV module shall be mounted on a stainless steel frame structure.

Each UV bank shall be connected to a receptacle on the power distribution center or junction box by means of a multi-conductor cable with a molded connector. The multiconductor cables shall be provided by the UVSS.

Each UV bank shall be designed such that plant operating personnel can change the lamps and lamp sleeves at the main system operating level. Any special tools needed to change lamps or sleeves shall be furnished as part of the equipment package.

The modules shall be designed so that the power supply wires must be disconnected before the module can be removed from the operating position for servicing. The modules shall not be capable of being powered when removed from the reaction chamber for servicing.

Each UV module row shall include a stainless steel UV light reflector to prevent the escape of UV light from the channel.

C. UV LAMPS:

The UV lamps shall be low pressure, high output (LPHO) mercury / indium amalgam lamps. The UV lamps shall not require a cool down period prior to lamp re-start, when power to the UV system fails or be interrupted for a short period of time. UV lamps that require cooling periods before re-start are not acceptable.

D. LAMP END SEAL AND LAMP HOLDER:

The open end of the lamp sleeve shall be sealed by means of a type 316 stainless steel sleeve nut which threads into a sleeve cup and compresses the sleeve O-ring. The sleeve nut shall have a knurled surface to allow a positive hand-grip for tightening. The sleeve nut shall not require any tools for removal.

E. LAMP SLEEVE:

The lamp sleeves shall be manufactured of type 214 clear fused quartz circular tubing by General Electric or equal. The sleeves shall be rated for UV transmission of a minimum of 89 percent, and shall not be subject to solarization over the length of their life. The minimum wall thickness of the quartz sleeve shall be 2.0 mm.

F. ELECTRONIC BALLASTS:

Electronic ballasts employing Power Factor correction and harmonic mitigation shall be provided to control the current inrush and filament energy during start-up to minimize cathode sputtering, control the overall power used by the lamps, and monitor lamp operating conditions and modulate lamp voltage to maintain lamp current.

The electronic ballasts shall conform to the following standards: ANSI C62-41 (IEEE 587) Class A related to transient protection, ANSI C78-1 related to lamp starting, UL 935 for ballast safety, and IEC Harmonic Standard 555-2 for ballast harmonic content.

G. ELECTRICAL:

1. GENERAL: Electrical components that are not sealed and suitable for immersion shall be mounted on a concrete pad approximately 6-inches above surrounding grade at approximate elevation 560 feet above mean sea level, located adjacent to the UV channel. Field verify elevations.

Electrical panels, components, and assemblies are required to be certified by an independent testing agency and shall bear the label of a nationally recognized testing agency such as Underwriters Laboratories.

UV Power Distribution Centers shall distribute power to the UV lamp banks located in a single channel. Power supply to the UV shall be 480 volt, 3 phase, 4 wire grounded wye circuits developed from UVSS furnished electrical equipment.

The UV lamps shall be powered by electronic ballasts mounted near the UV system. Each lamp bank power level shall be capable of being automatically regulated between 60 and 100% of full power. Power regulation shall be controlled by the System Control Center on the basis of flow rate and UV intensity. The power regulation set points shall be operator adjustable.

The System Control Center shall be programmed for the normal-standby-normal power modes: When the Plant normal power source fails, the Plant loads including the UV system will automatically transfer to a secondary source. The UV system shall restart and operate when the power system returns to the normal power supply or the secondary source.

Each UV Power Distribution Center shall distribute power for the UV lamp banks and the automatic cleaning system.

Electrical cables required between the UV banks, UV Power Distribution Centers, the UV System Control Center panel, and any equipment supplied under this section, shall be provided in accordance with the Unit Responsibility defined in Part 1.02 of this section.

2. HARMONIC FILTERS: The UV disinfection system shall include provisions to meet the harmonic distortion specified and may require the use of harmonic filters and reactors.

The voltage and current distortion level shall not be exceeded under the following defined conditions and as defined by IEEE-519: Harmonic filters at any power load level configured for power factor of the UV system and filters between .85 and .95 lagging.

Transformers employed to step down the utilization voltage to the UV system ballasts, or for trapping of harmonic triplens, shall have the K factor requirement of the transformer computed and the proper K rated transformer supplied by the UV manufacturer.

The design requirements of the harmonic filters shall be such that the harmonic distortion limits are not exceeded under normal operating conditions. Devices to accomplish these requirements shall be included in the UVSS scope of supply. Devices, components, and wiring included in the UV system shall be sized for the harmonic currents imposed.

Submittal information shall be furnished with sufficient detail to indicate the basis of the UVSS design. A system harmonics analysis shall be conducted by the UVSS following the award of contract and third-party testing data shall be provided showing compliance based on a similar system using the same ballast type.

Harmonic filtering equipment is not required, if demonstrated through factory testing that the UV system meets the harmonic limitations specified at their equipment input power connection location. Certified tests shall be documented, sealed by a registered engineer, and provided as a submittal.

The computer based analysis shall use software by Cyme, SKM, Operation Technology, EDSA, or equal and shall be completed within two months after receipt of the detailed plant information following the notice to proceed. The cost of this analysis shall be included in the price of the UV equipment. Refer to the Contract Document for the plant electrical distribution system and distances as necessary to conduct the analysis.

For onsite testing requirements, the analysis shall indicate results for UV loading levels of 50, 75, and 100 percent. The operation from both the utility power and secondary power shall be analyzed. Harmonic filter recommendations shall be based on the results of the analysis. These analyses shall be submitted for review.

The computed harmonic values and power factor levels in these analyses shall be used to verify proper operation in the testing and commissioning phase.

H. CONTROL AND INSTRUMENTATION:

1. SYSTEM CONTROL CENTER: Control and monitoring of UV system operation shall be provided in the UV system control center panel using an Allen-Bradley ControlLogix programmable logic controller (PLC) with an operator interface station (OIS). PLC shall include an Ethernet data communication port for communication with the plant SCADA System.

System information shall be displayed on a 10-inch x 7.5-inch (minimum screen dimensions), touch-screen, color PanelView Plus Operator Interface manufactured by Allen-Bradley. Provide a lockable hinged stainless steel cover to protect the touchscreen panel from the elements when the operator interface is not being used.

Operator interface shall be menu driven with automatic fault message windows appearing upon alarm conditions. System operating information shall be displayed on the local operator interface screen in both graphical and text format, the following information shall be displayed simultaneously:

a. Number of banks and modules in service
b. Calculated UV dose
c. Individual bank UV intensity
d. Total flow rate, from Plant flowmeter
e. Hand, Auto or Remote modes
f. UV lamp status
g. Current Power Usage in kW.

Individual lamp hours and cycles (total and current), ballast output, and average UV intensity shall be accessed using the function keys and shall be displayed on the local operator interface screen.

System command, control and monitoring shall be menu driven using designated function keys and an on-line “Help” key shall be provided to allow access to “Help” information screens. In the event of a fault, an alarm icon shall flash and shall display on the local operator interface system screen until the alarm has been manually or automatically cleared.

2. SYSTEM INTERFACE: The UV system PLC shall be fully compatible with the Plant SCADA system and shall communicate via Ethernet. Control functions, alarms, and indications of status shall be communicated to the Plant SCADA System.

3. CONTROL STRATEGY: An automatic flow-paced and dose-paced control system shall be provided. The control system shall be PLC based and fully capable of allowing banks of lamps to be operated to maintain sufficient UV dose proportional to flow while conserving power. A 4-20 mA analog signal shall communicate plant flow to the UV System Control Center.

Commands to turn the UV banks on and off shall be maintained in the event of a PLC or other related power failure and following restoration of power after a power failure. All the UV banks shall be turned on to full power for an adjustable startup period of 30 minutes. For example: After 30 minutes, the PLC shall resume automated control of lamp output power to provide the specified dosage to the treated effluent.

A UV disinfection management system shall control the On-Off cycling as well as the adjustable lamp power setting to each bank of UV lamps based on a received UV dosage pacing philosophy. The management system shall utilize a UV sensor located within each UV bank to accurately sense any change in lamp power, lamp fouling, effluent transmittance, or other factor and compensate for any reduction in the UV-C output due to lamp aging or fouling.

The UV disinfection management system shall receive inputs from each of the UV intensity sensors (one per UV bank) and effluent flow meters and shall automatically adjust the received UV dose to maintain the required levels of disinfection under all operating conditions.

4. ALARMS: Alarms shall be provided at the System Control to indicate to the plant operators that maintenance attention is required, and to indicate an extreme operating condition which may jeopardize disinfection system performance. The 20 most recent alarms shall be recorded in an alarm history register and displayed when prompted. All alarms shall have an adjustable time delay from 1 to 60 minutes to avoid nuisance tripping. The following two levels of alarms shall be provided:

a. ADVISORY ALARM:

(1) Low UV intensity--alarm to indicate that UV intensity has dropped to below a pre-set percentage of the full lamp intensity. The alarm setting shall be pre-set at the factory at the manufacturer recommended setting after 100 hours of burn-in of the lamps, and shall be field adjustable through the local operator interface.

(2) Individual lamp or ballast failure—alarm shall indicate single lamp or ballast failures that occur which are not adjacent to each other and which do not

exceed a pre-set 5 percent of lamps in a bank. This pre-set percentage shall be field adjustable through the local operator interface.

b. HIGH PRIORITY ALARM:

(1) High water level warning--alarm to indicate that water level in channel has risen above a preset level. Water level alarm setpoint shall be field adjustable.

(2) Low water level warning--alarm to indicate that water level in channel has dropped below a preset level. Water level alarm setpoint shall be field adjustable.

(3) Low UV intensity—alarm shall be pre-set at the manufacturer recommended setting after 100 hours of burn-in of the lamps, and shall be field adjustable through the local operator interface.

(4) Adjacent lamp or ballast failure – alarm shall indicate failure of two or more lamps or ballasts that are adjacent to one another.

(5) Multiple lamp or ballast failure – alarm shall indicate the failure of more than a pre-set 5 percent of lamps or ballasts in a bank. This pre-set percentage shall be field adjustable through the local operator interface.

(6) Module failure--alarm to indicate when a current leakage to ground occurs, or when excessive current draw occurs for any individual module. Module failure shall also be indicated if a module is unplugged without first being placed in the OFF position from the system control center.

(7) Flow meter failure – alarm shall indicate a failure to receive a signal from the respective effluent flow meter.

(8) Bank failure – alarm shall indicate the failure to energize 30 percent or more of the modules within a bank.

(9) PLC power failure – alarms shall indicate loss of power to the PLC or failure via the health status bit in the PLC.

(10) Low dose failure – alarm shall indicate when the dose being delivered is less than is necessary to ensure disinfection given the flow and measured water quality data.

The local operator interface shall identify the affected lamp, module, or bank by a numbered address system as well as a graphical representation of the individual lamp that failed in the area.

Bank status shall be capable of being placed either in “Local”, “Off” or “Remote” mode switch in the System Control Center.

1. In Local Mode: The individual banks shall be turned on-off through a local On-Off switch independent of the PLC.

2. In Local Mode: The local On-Off software switch in the local operator interface shall command the individual banks On-Off through the PLC.

3. In Auto Mode: The PLC shall automatically sequence the banks On-Off via the control Algorithm.

4. Banks shall be automatically cycled for equal wear and timed off to minimize bank cycling.

5. Elapsed time of operation of each bank shall be recorded and displayed on the OIS display screen when prompted.

I. MODEM:

The UVSS shall furnish a modem to allow quick connection to the control system from any standard telephone line to allow the UVSS to download and upload programs, update firmware, collect data, monitor the system status, and make program changes from a remote location.

A connection speed of between 28K and 56K bps should be provided with facsimile capability to send / receive 14,400 bps to 2400 bps using a V.21Channel 2, T.30, T.4, EIA-578 Class 1 compatibility with Fax Software.

J. UV LIFTING DEVICES:

One Davit crane, support base and lifting sling shall be provided by the UV manufacturer to assist in removing individual modules or associated UV equipment from the effluent channel and areas adjacent to each channel. Lifting device will be a davit type crane with hand winch that will include an adjustable boom to ensure adequate reach and height including the future channel as shown on the drawings and specified. The lifting device shall include a swivel handle for rotation and positioning. Crane and base will be supplied by the UV manufacturer and shall be installed by the Contractor. Davit shall be installed outdoors uncovered and shall be exposed to all weather conditions. Davit crane shall be suitably coated to protect the crane from potentially corrosive wastewater environment.

K. UV INTENSITY DETECTION SYSTEM:

Each UV bank shall have a minimum of one on-line, in-channel UV intensity sensor and transmitter that responds to the germicidal portion of the light emitted by the UV lamps. The UV sensor shall attach to or be located adjacent to a lamp in a module with a predetermined alignment. The sensor shall not degrade after prolonged exposure to UV light or effluent.

The unit shall continuously monitor the average UV intensity to the water to be disinfected and shall transmit a 4-20 mA signal to the UV System Control Center panel and the respective Power Distribution Center for display via the operator interface as an absolute value in mW/cm2.

The intensity sensor shall have a response time such that each reading is updated at least every 15 seconds. The accuracy shall be +/- 2 percent of full-scale transmission. Initial calibration as well as calibration instructions and necessary equipment for the calibration of the UV intensity sensors shall be supplied by the UVSS.

L. CHANNEL LEVEL CONTROLS:

1. LEVEL MEASURING SYSTEM:

a. CONTINUOUS LEVEL MEASURING SYSTEM (WEDECO): The UVSS shall supply one ultrasonic level measuring system for the channel. The ultrasonic level measuring systems shall consist of a sonic transducer, an electronic transmitter, and interconnecting cables. The sonic transducer shall generate a sonic signal, detect the return echo and convert the elapsed time to a level signal. The transmitter shall have the following features: solid-state design, integral temperature compensation; and, a 4-20 mA output signal linearly proportional to level with an accuracy of 0.25 percent of range.

Ultrasonic level measuring systems shall be by Endress + Hauser's Prosonic 860, Milltronics level indicating transmitter system, or Engineer pre-approved equal.

b. DISCRETE LEVEL SWITCH (WEDECO): The UVSS shall supply one high and one low water level switches for the UV channel. The vertical settings of the level alarms shall be field determined by the UVSS in order to properly protect the UV modules from high or low water levels in the UV channel.

The level switches shall provide dry contacts that open upon high or low water level in the channel causing an alarm condition at the system control center. The appropriate interconnect conductors between the sensor and the System Control Center panel shall be provided by the UVSS. The level switches shall be free-floating type, suspended from an oil resistant waterproof cable.

The cable shall be designed to support the weight of the float without additional strain relief and shall be permanently sealed where it enters the float body. The conductors shall be a minimum size of 18 AWG twisted shielded pair.

The switch shall be a single-pole-double-throw dry contact type and rated at 10 amps at 120 Vac. Mercury switches are not acceptable. The float shall have a PVC or ABS corrosion and impact resistant shell. Level switches shall be STI model T10, Warrick series M, or equal.

c. DISCRETE LEVEL SWITCH (Trojan): The UVSS shall supply one low water level switch for the UV channel. The vertical settings of the level alarms shall be field determined by the UVSS in order to properly protect the UV modules from low water level in the UV channel.

The level switch shall provide dry contacts that open upon low water level in the channel causing an alarm condition at the system control center. The appropriate interconnect conductors between the sensor and the System Control Center panel shall be provided by the

UVSS. The level switch shall be a conductivity type switch. Provide non-conductive probe mounting hardware to prevent dislocation of the probes under all flow conditions.

M. AUTOMATIC CLEANING SYSTEM:

The UV disinfection system shall include a pneumatically or hydraulically driven automatic mechanical cleaning system that provides a wipe down of each lamp sleeve and the UV intensity detector to reduce the extent of fouling.

The cleaning cycle shall be capable of being placed in Hand, Off or Auto mode at the UV System Control Center panel. Cleaning cycle intervals shall be field adjustable within the range of once/hour to once/month.

If the automatic cleaning system uses chemicals or if the UVSS recommends that occasional ex-situ chemical cleaning of the sleeves be conducted, it shall be equipped with all required cleaning reagents and solutions necessary for initial equipment testing and for equipment startup and for one year of operation.

N. LEVEL CONTROL GATE:

Control of water level shall be provided by a single (motor driven) downward opening weir gate per channel.

The dimensions of the weir gate shall be designed in accordance with the channel geometry and the peak hydraulic flow.

Weir gate frame shall be suitable for end of channel or in channel mounting and incorporate resilient seals. Any tensioning adjustment units shall be mounted on the downstream side of the gate to enable adjustments without draining the channel.

Single or duplex stainless steel rising screw stems shall terminate in the drive sleeve of a modulating actuator or pair of gearbox units with drive shaft to modulating actuator. The modulating actuator shall be mounted on a stainless steel stool fixed directly to the frame.

Aumatic control of the weir gate position shall maintain a constant water level under all flow conditions spcified. A level sensor mounted onto a fixed structure above the channel shall measure the channel level continuously. The channel level shall be used by the PLC to provide modulating control of the downward opening weir gate utilizing a PID control algorithm.

O. PHOTOMETER:

One single beam UV photometer with front panel and 100 percent transmittance control adjustment shall be supplied by the UVSS to measure the UV transmittance of the effluent for the project. The range shall be 0 to 100 percent transmittance with a wavelength accuracy of ±0.16 half bandwidth. Accessories shall include two matched quartz cuvettes, 100 percent transmittance standard solution and cuvette cleaning solution. The photometer and accessories shall be packed in a single durable plastic storage container. The photometer and accessories shall be delivered to the Construction Manager in the original shipping container.

P. SAFETY EQUIPMENT:

Face shields shall be provided which block UV wavelengths between 200 and 400 nm. A minimum of five face shields shall be furnished by the UVSS. UV warning signs stating "Caution UV Radiation" shall be furnished and mounted by the Contractor at the periphery of the disinfection process. Signage shall be in accordance with Division 10.

Q. UPS:

Phoenix Contact, 15 minutes, to power the HMI and PLC during the event that there is a power outage.

2.04 TOOLS

Two of each of any special tools needed for maintenance and repair of the UV disinfection system shall be furnished as part of the equipment package. All tools shall be packed in a tool box(s) suitable for shipment and storage. Each box shall be labeled with the following: "UV disinfection system _____ tools," where the function of the tool is inserted in the blank.

2.05 SPARE PARTS

The following spare parts shall be furnished by the UVSS to the Owner:

1. A complete set of spare UV lamps sufficient in number to replace all of the lamps in both banks.

2. A set of spare quartz sleeves sufficient in number to replace all of the sleeves in one bank.

3. A complete set of spare lamp end seal o-rings sufficient in number to replace all of the o-rings in both banks.

4. A complete set of spare electronic ballasts sufficient in number to replace all of the ballasts in one bank.

5. 2 UV intensity sensors (WEDECO)

6. 2 UV transmissivity sensors (Trojan)

7. A complete set of wiper assemblies sufficient in number to replace all of the wiper assemblies on one bank of lamps at a time.

All spare parts shall be packed in boxes suitable for shipment and storage. Each box shall be labeled with the following: "UV disinfection system spare _____," where the name of the spare parts is inserted in the blank. All spare parts shall be of the same type and quality as the parts provided with the equipment supply package.

2.06 PRODUCT DATA

The following information shall be provided in accordance with Section 01300:

1. Applicable operation and maintenance information as specified in Section 01730.

2. Installation Certification Form 11000-A as specified in paragraph 11737-3.02.

3. Instructions Certification Form 11000-B as specified in paragraph 11737-3.05.

PART 3--EXECUTION

3.01 DELIVERY

The Contractor shall be responsible for procuring, loading, delivering, unloading, and storage of the UV disinfection equipment and materials. The equipment specified in this Section shall be protected during shipment, stored in a covered and secure area, and subject to the provisions of Section 01605.

3.02 INSTALLATION

The Contractor shall install the equipment in accordance with the UVSS's recommendations. Installation shall be carried out by mechanics and electricians skilled in work of this kind, under the guidance of a factory-trained representative of the UVSS.

The UVSS's representative shall be available during construction, but need not be continuously present at the site. The equipment shall be checked, tested, and placed in operation by a factory-trained UVSS's representative, who shall complete and submit Form 11000-A specified in Section 01999. The time available for installation from the manufacturer's representative shall be included in the time listed in paragraph 11737-3.03.

3.03 FIELD TESTING AND STARTUP

After completion of installation, the UV disinfection system shall be tested and commissioned. The UVSS shall provide a factory representative for a minimum of two trips that include five full 8-hour days on-site (not including travel time) for startup, and initiation of testing procedures.

The UVSS shall coordinate with the Contractor to prepare and submit to the Engineer a detailed protocol to be followed for the performance test. This protocol shall be submitted at least 30 days in advance and shall require written review by the Engineer prior to initiating the tests. These tests shall demonstrate the ability of the disinfection systems to achieve the required disinfection requirements of this section. This test shall be performed as described in paragraph 11737-3.04.

3.04 SYSTEM PERFORMANCE TESTING

A. GENERAL:

The Contractor shall commission the UV disinfection system and operate it for a period of 30 days during which time he shall collect and analyze samples to demonstrate compliance with the requirements of this section. During the 30-day test period, the Contractor shall provide all labor, sampling containers, and, unless otherwise specified, all required analytical services by an independent laboratory or testing service approved by the Owner. Owner shall furnish secondary effluent, and power to operate the UV disinfection equipment. Contractor shall perform the following schedule of tests:

Test	Sample location(s)	Frequency	Procedure
Treatment Performance	(1) UV Influent Channel (2) UV Effluent Channel	Three grab samples each day for 30 days	Standard Methods (Fecal coliform: 9222-D; total suspended solids: 2540-D; UV transmissivity)
Hydraulic Performance	UV Channels: 3 feet upstream and 8 feet downstream of UV System	At three different flow rates	Measure depth of water upstream and downstream of UV System within on-line channel
Harmonic Distortion	Electrical power source specified herein	Twelve tests	Conduct tests as described in paragraph 11737-3.04 D.

1. PERFORMANCE TESTING REPORT: The Contractor shall submit to the Engineer a report summarizing the results of the above testing, with the following additional data reported for each sampling event:

a. Title of the test.

b. Name of person conducting the test.

c. Date and time of day when sample was taken.

d. Bank number in service in on-line channel (e.g. UV Bank 1)

e. Flow through each channel in million gallons per day (mgd), and UV transmittance, intensity, and flowrate readings at the time of sample collection.

f. Dosage delivered in μWatt-sec/cm2.

B. TREATMENT PERFORMANCE TESTING:

The Construction Manager will witness the sample collection activities conducted in association with this testing. The Contractor shall collect one 1,000 ml sample from the UV Influent Channel and one 1,000 ml sample from the UV Effluent Channel during each sampling event. All samples shall be refrigerated to 4 deg Centigrade immediately after collection, and shall remain refrigerated to this temperature until delivered to the Laboratory. The Contractor shall provide refrigerated sample containers in sufficient number and size that samples can be delivered to the laboratory in them on the day of sampling, and returned to the site following the next day's sample delivery.

The Contractor shall provide the services of an independent state-certified laboratory, and the Contractor shall arrange for sample delivery by the most rapid means to that laboratory. A "chain of custody" form shall be used for all sampling events to document sampling time, sampling conditions, possession of samples, time of sample transfer, and time of analysis.

The Construction Manager shall be notified at least 24 hours in advance of planned sampling activities, or changes thereto, so that the sampling can be witnessed at the Construction Manager's option.

The Contractor’s laboratory shall analyze the 1,000 ml sample from the UV Influent Channel for transmissivity and for total suspended solids (three replicates; solids will only be analyzed on Mondays, Wednesdays, and Fridays), and shall analyze the 500 ml sample from the UV Effluent Channel for fecal coliform, and shall report the results to the Construction Manager.

No major changes in equipment or apparatus shall be permitted during this testing period. However, minor adjustments of equipment that would normally be expected during regular operation of the equipment may be made.

If during the Performance Tests, the system does not meet all performance requirements of this specification, including all requirements as defined in paragraphs 11737-1.01 D and G of this section, the Performance Tests shall be re-run, as described above. Additional testing, labor, materials, equipment, etc. associated with correcting the deficiencies in the UV system, including the repeated tests, shall be at no additional cost to the Owner. All additional costs shall be borne by the UVSS.

If the installed UV disinfection equipment, when tested for a second time, fails to meet all of the requirements of the guarantee, as well as the operational performance data requirements, as set forth herein, the UVSS shall make any and all modifications to the system necessary to cause the system to meet the performance objectives. These modifications could include purchasing and installing additional equipment and appurtenances, including piping, valves, concrete tankage, control wiring, electrical system modifications, etc.

C. HYDRAULIC PERFORMANCE TESTING:

The Contractor shall provide hydraulic testing and supporting calculations to verify that head losses through the UV disinfection system is equivalent to those specified in paragraph 11737-1.01 D. The Contractor shall notify the Construction Manager one week prior to

conducting the hydraulic performance tests, which shall be witnessed by the Construction Manager.

The Contractor shall conduct three hydraulic tests during the 30 day commissioning period, where each test varies in flow per channel from the other tests by at least 33 percent and test points span the range of plant flow. The Contractor shall summarize the testing data and prepare calculations that extrapolate the test data to estimate headloss at the peak design flow. The test data and calculations shall be submitted to Engineer for approval.

D. HARMONIC DISTORTION TESTING:

Current and voltage harmonic distortion testing shall be conducted using a Dranetz-BMI Power Platform PP1 with a TASKCard PQ Plus card installed or conducted using an equal recording instrument. The recordings shall be conducted at the power source as specified prior. The treatment plant will operate in the normal mode at the time. Coordinate the tests with the Construction Manager.

The recording shall be conducted at fifty percent, seventy-five percent, and one hundred percent power levels of each UV disinfection bank alone and for the UV disinfection banks operating together over the same power levels. The test shall be performed with Utility power.

Provide a Test Report with the recorded results, along with a summary of the distortion levels, shall be delivered to the Engineer within one week of conducting the tests.

The Test Report shall discuss the test results with explanation of plant operating condition and UV conditions and state if the THD are within the IEEE-519 voltage and current limits with the Point-of-Common Coupling defined as at the UV System Equipment input power source indicated on the contract document electrical drawings.

3.05 TRAINING

For training requirements, see Section 01664. Training shall be certified on Form 11000-B in Section 01999. The UVSS shall provide the services of a factory-trained representative for two full days (16 hours) of hands-on operation and maintenance training at the Little River WRF.

Two separate training classes shall be provided – one for the operators and one for the maintenance personnel. This time is in addition to that required in paragraph 11737-3.03.

END OF SECTION

SECTION 11902

PARSHALL FLUME LINERS

PART 1 - GENERAL

1.01 DESCRIPTION

A. SCOPE:

This section specifies Parshall flume liners fabricated from reinforced polyester resin. This equipment shall conform to the requirements of Section 11000, unless specified otherwise.

The manufacturer shall review the mechanical and structural layout drawings to familiarize themselves with the location and the set-up of the equipment specified and shall assure themselves that the equipment specified is appropriate for and coordinated with what is shown on the contract drawings. The manufacturer shall also review the relevant electrical plan and one-line diagram and the relevant process and instrumentation diagram drawing to ensure that the contract drawings are appropriate and coordinated with the equipment and controls specified.

B. TYPE:

Parshall flume liners furnished under this specification shall be molded in one piece to produce elements conforming to the dimensions specified.

C. PERFORMANCE AND DESIGN REQUIREMENTS:

The Parshall flume liners shall be fabricated to the dimensions specified. Parshall flumes with a 12-inch throat width shall be capable of measuring flows up to 10.5 mgd.

D. EQUIPMENT LIST:

Item	Equipment No.	Throat Width
Influent Parshall Flume	MME-2010	12-inch
Effluent Parshall Flume	MME-5130	12-inch

E. PERFORMANCE REQUIREMENTS:

Parshall flume liners shall be designed for continuous exposure to municipal wastewater containing organic and inorganic solids including vegetable parts, grit, paper, and rubber products, rags, petroleum products, animal fats and greases, industrial solvents, ammonia and detergents. During the normal life of the laminants, they may be left in the dry condition for protracted periods. Wastewater temperatures are expected to vary between 40 and 80 degrees F and ambient air temperatures are as specified in Section 01800.

1.02 REFERENCES

This section contains references to the following documents. They are a part of this section as specified and modified. Where a referenced document contains references to other standards, those documents are included as references under this section as if referenced directly. In the event of conflict between the requirements of this section and those of the listed documents, the requirements of this section shall prevail.

Unless otherwise specified, references to documents shall mean the documents in effect at the time of Advertisement for Bids or Invitation to Bid (or on the effective date of the Agreement if there were no Bids). If referenced documents have been discontinued by the issuing organization, references to those documents shall mean the replacement documents issued or otherwise identified by that organization or, if there are no replacement documents, the last version of the document before it was discontinued. Where document dates are given in the following listing, references to those documents shall mean the specific document version associated with that date, regardless of whether the document has been superseded by a version with a later date, discontinued or replaced.

Reference	Title
U.S. Department of Agriculture	Soil Conservation Service Circular No. 843

1.03 SUBMITTALS

The following information shall be submitted in accordance with the provisions of Section 01300:

1. A copy of this specification section, with addendum updates included, and all referenced and applicable sections, with addendum updates included, with each paragraph check-marked to indicate specification compliance or marked to indicate requested deviations from specification requirements. Check marks (✓) shall denote full compliance with a paragraph as a whole. If deviations from the specifications are indicated, and therefore requested by the Contractor, each deviation shall be underlined and denoted by a number in the margin to the right of the identified paragraph, referenced to a detailed written explanation of the reasons for requesting the deviation. The Engineer shall be the final authority for determining acceptability of requested deviations. The remaining portions of the paragraph not underlined will signify compliance on the part of the Contractor with the specifications. *Failure to include a copy of the marked-up specification sections, along with justification(s) for any requested deviations to the specification requirements, with the submittal shall be sufficient cause for rejection of the entire submittal with no further consideration.*

2. Dimensional drawings showing the equipment and clearances required for installation and for maintenance purposes.

3. Data indicating equipment capacities and materials of construction.

4. Flow to measured depth curves and equations for each of the supplied flume sizes.

PART 2 - PRODUCTS

2.01 ACCEPTABLE PRODUCTS

Flume liners shall be ABB, Leopold, Plastifab, or Tracom modified to provide the specified features.

2.02 MATERIALS

Materials of construction shall be as follows:

Component	Material
Liner	Polyester resin reinforced with greater than 30 percent fiberglass

2.03 EQUIPMENT

A. DIMENSIONS:

Dimensions of the Parshall flume liners shall be in conformance with the standard design dimensions for flumes of the specified throat width stated in the U.S. Department of Agriculture, Soil Conservation Service, Circular No. 843.

B. FABRICATION:

Parshall flume liners shall be molded in one piece from premium grade, corrosion resistant polyester resin reinforced with not less than 30 percent fiberglass by weight. Resin shall be Atlac 382, Derakane 411, or equal. Liner shall have sufficient wall thickness and reinforcing ribs to prevent distortion while being shipped or installed. Inside surfaces of the liner shall be smooth and free from irregularities. Outside surfaces shall be furnished with side clips or anchoring ribs for firm, permanent anchorage in concrete. Flumes shall be equipped with removable top cross ties to facilitate installation. A head staff gauge shall be laminated into the wall of the liner for measurement of the upstream water depth (Ha). The staff gauge shall be located on the left wall when looking downstream from the head of the flume. The gauge shall be of sufficient length to read the maximum flow rate specified and shall be graduated every 0.05 ft. with numbers every 0.1 ft. Staff gauges shall be provided with indications in ft. and MGD.

C. ULTRASONIC LEVEL DEVICE MOUNTING:

Parshall flume liners shall be provided with An adjustable T-304 stainless steel support bracket and all other mounting hardware necessary for mounting an ultrasonic level sensor above the flume for level measurement.

Ultrasonic level measuring devices shall be provided separately by the Contractor under specification section 17212. Flume supplier shall coordinate with Contractor to ensure that mounting hardware provided is suitable for level instrument to be provided.

D. ACCESSORIES:

Inlet bulkheads, wing walls or other transitions shall be provided, as required, to transition flow between the flume and approach channel.

2.04 PRODUCT DATA

The following information shall be provided in accordance with paragraph 01300:

1. Installation instructions

2. Testing and adjusting instructions

3. Operation and maintenance information as specified in Section 01730

4. Manufacturer's Installation Certification Form 11000-A as specified in paragraph 11902-3.01

PART 3 - EXECUTION

3.01 GENERAL

The equipment specified in this section shall be installed by the Contractor in accordance with the manufacturer's recommendations and under the guidance of the manufacturer's field representative. Installation of the flume liners shall be certified on Form 11000-A as specified in Section 01999.

3.02 INSTALLATION

Flume shall be molded with a 2-1/2-inch flange on bottom and sides of the approach and discharge ends to facilitate connection to concrete channels. The Parshall flume liners shall be installed in such a way that the entire floor for the converging section shall have a slope of less than 0.001 ft/ft from perfect level and the walls shall have a difference of less than 0.002 ft/ft from perfect vertical. Deviations in excess of these limits will require the flume liners and adjacent concrete to be removed and reinstalled to meet this requirement.

3.03 FIELD TESTING

The equipment furnished under this section will be subject to field performance tests. All performance tests will be performed by the Contractor with the assistance of the manufacturer's field service representative.

END OF SECTION

SECTION 11903

CUTTHROAT FLUME LINERS

PART 1 – GENERAL

1.01 DESCRIPTION

A. SCOPE:

This section provides detailed specifications for cutthroat flume liners fabricated from reinforced polyester resin. Cutthroat flume liners furnished under this specification shall be molded in one piece to produce elements conforming to the dimensions specified.

The manufacturer shall review the mechanical and structural layout drawings to familiarize themselves with the location and the set-up of the equipment specified and shall assure themselves that the equipment specified is appropriate for and coordinated with what is shown on the contract drawings. The manufacturer shall also review the relevant electrical plan and one-line diagram and the relevant process and instrumentation diagram drawing to ensure that the contract drawings are appropriate and coordinated with the equipment and controls specified.

B. FLUME SCHEDULE:

Flumes covered in this section are as follows:

Item	Equipment number
Biological Basin Train 1 Cutthroat Flume	MME-2061
Biological Basin Train 2 Cutthroat Flume	MME-2062
De-Ox Basin 1 Cutthroat Flume	MME-3031
De-Ox Basin 2 Cutthroat Flume	MME-3032

C. PERFORMANCE REQUIREMENTS:

The cutthroat flume liners shall be fabricated to the dimensions specified.

Cutthroat flume liners shall be designed for continuous exposure to municipal wastewater containing organic and inorganic solids including vegetable parts, grit, paper, and rubber products, rags, petroleum products, animal fats and greases, industrial solvents, ammonia and detergents. During the normal life of the laminants, they may be left in the dry condition for protracted periods. Wastewater temperatures are expected to vary between 55 and 85 degrees F and ambient air temperatures may range between 0 and 110 degrees F.

1.02 SUBMITTALS

The following information shall be submitted in accordance with the provisions of Section 01300:

1. A copy of this specification section, with addendum updates included, and all referenced and applicable sections, with addendum updates included, with each paragraph check-marked to indicate specification compliance or marked to indicate requested deviations from specification requirements. Check marks (✓) shall denote full compliance with a paragraph as a whole. If deviations from the specifications are indicated, and therefore requested by the Contractor, each deviation shall be underlined and denoted by a number in the margin to the right of the identified paragraph, referenced to a detailed written explanation of the reasons for requesting the deviation. The Engineer shall be the final authority for determining acceptability of requested deviations. The remaining portions of the paragraph not underlined will signify compliance on the part of the Contractor with the specifications. *Failure to include a copy of the marked-up specification sections, along with justification(s) for any requested deviations to the specification requirements, with the submittal shall be sufficient cause for rejection of the entire submittal with no further consideration.*

2. Dimensional drawings showing the equipment and clearances required for installation and for maintenance purposes.

3. Data indicating equipment capacities and materials of construction.

4. Flow to measured depth curves and equations for each of the supplied flume sizes.

PART 2 – PRODUCTS

2.01 ACCEPTABLE PRODUCTS

Flume liners shall be Fischer and Porter, Leopold, Plastifab, Tracom, or equal modified to provide the specified features.

2.02 MATERIALS

Materials of construction shall be as follows:

Component	Material
Liner	Polyester resin reinforced with greater than 30 percent fiberglass

2.03 EQUIPMENT

A. DIMENSIONS:

Cutthroat flumes shall have an inlet section that is one-third of the total length with uniform, symmetrical walls that uniformly converge to the throat at a 1 to 3 length to width ratio. The outlet section shall be two-thirds of the overall flume length with uniform, symmetrical walls that uniformly diverge from the throat at a 1 to 6 length to width ratio. The internal floor of each flume liner shall be flat. All supplied liners shall have walls that extend a minimum of 2’-0” above the flume invert. The table that follows defines the dimensions of the specified flume liners:

Equipment Number	Overall Length, ft	Invert, ft above MSL	Inlet and Outlet Width, ft	Throat Width, ft
MME-2061	3.0	888.75	1.5	0.75
MME-2062	3.0	888.75	1.5	0.75
MME-3031	3.0	893.00	1.5	0.75
MME-3032	3.0	893.00	1.5	0.75

B. FABRICATION:

Cutthroat flume liners shall be molded in one piece from polyester resin reinforced with not less than 30 percent fiberglass by weight with sufficient wall thickness and reinforcing ribs to prevent distortion while being shipped or installed. Inside surfaces of the liner shall be smooth and free from irregularities. Outside surfaces shall be furnished with side clips or anchoring ribs for firm, permanent anchorage in concrete. Flumes shall be equipped with removable top cross ties to facilitate installation.

A measuring scale, with 1/4-inch increments shall be provided on the side of the flume at the 2/3 "A" dimension point. The measuring scale shall indicate the depth in inches, and free-discharging flow rate in millions of gallons per day (mgd) with 1/2-mgd tick-marks.

2.04 PRODUCT DATA

The following information shall be provided in accordance with paragraph 01300:

1. Installation instructions.

2. Testing and adjusting instructions.

3. Operation and maintenance information as specified in Section 01730.

4. Manufacturer's Installation Certification Form 11000-A as specified in paragraph 11902-3.01.

PART 3 – EXECUTION

3.01 GENERAL

The equipment specified in this section shall be installed by the Contractor in accordance with the manufacturer's recommendations and under the guidance of the manufacturer's field representative. Installation of the flume liners shall be certified on Form 11000-A as specified in Section 01999.

3.02 INSTALLATION

Flume shall be molded with a 2 1/2-inch flange on bottom and sides of the approach and discharge ends to facilitate connection to concrete channels. The cutthroat flume liners shall be installed in such a way that the entire floor for the converging section shall have a slope of less than 0.001 ft/ft from perfect level and the walls shall have a difference of less than 0.002 ft/ft from perfect vertical. Deviations in excess of these limits will require the flume liners and adjacent concrete to be removed and reinstalled to meet this requirement.

3.03 FIELD TESTING

The equipment furnished under this section will be subject to field performance tests. All performance tests will be performed by the Contractor with the assistance of the manufacturer's field service representative.

END OF SECTION

SECTION 11921

AUTOMATIC SAMPLERS

PART 1--GENERAL

1.01 DESCRIPTION

A. SCOPE:

This section specifies automatic composite sampling equipment for wastewater applications.

The manufacturer shall review the mechanical drawings to familiarize themselves with the location and the set-up of the equipment specified and shall assure themselves that the equipment specified is appropriate for and coordinated with what is shown on the contract drawings. The manufacturer shall also review the relevant electrical plan and one-line diagram and the relevant process and instrumentation diagram drawing to ensure that the contract drawings are appropriate and coordinated with the equipment and controls specified.

B. TYPE:

Samplers shall be the all-weather refrigerated type for sampling from pressurized lines, elevated tanks and open channels. The sampler shall consist of a sampling mechanism, sample chamber, a refrigerator, appurtenances, and controls.

C. EQUIPMENT LIST:

Item	Equipment No.
Plant Influent Sampler 1	SMP-1010
Plant Influent Sampler 2	SMP-2060
Plant Effluent Sampler	SMP-5130

D. OPERATING CONDITIONS:

The wastewater to be sampled may be expected to contain up to 15,000 milligrams per liter (mg/l) of suspended solids, soft biological floc, biological and chemical solids, industrial solvents, petroleum products, grease, grit, and varying amounts of chlorine.

Item	SMP-2010	SMP-2061	SMP-5130
Sample Size, ml, (adjustable)	10 to 9999	10 to 9999	10 to 9999
Suction line inner diameter, inches	3/8	3/8	3/8
Sampling time interval (adjustable)	1 min to 24 hrs	1 min to 24 hrs	1 min to 24 hrs

Item	SMP-2010	SMP-2061	SMP-5130
Sample Storage Temperature, ^{o}C	4 ± 1	4 ± 1	4 ± 1
Voltage/Phase	120/1	120/1	120/1
Application	Open channel	Open channel	Open channel
Flow through cell	Not required	Not required	Not required
Sample vertical lift, feet	15-20 feet	5-10 feet	5-10 feet

E. SHIPMENT, PROTECTION, AND STORAGE:

Equipment shall be protected during shipment, handling, and storage as specified in Section 01605.

1.02 SUBMITTALS

The following information shall be provided in accordance with Section 01300:

1. A copy of this specification section, with addendum updates included, and all referenced and applicable sections, with addendum updates included, with each paragraph check-marked to indicate specification compliance or marked to indicate requested deviations from specification requirements. Check marks (✓) shall denote full compliance with a paragraph as a whole. If deviations from the specifications are indicated, and therefore requested by the Contractor, each deviation shall be underlined and denoted by a number in the margin to the right of the identified paragraph, referenced to a detailed written explanation of the reasons for requesting the deviation. The Engineer shall be the final authority for determining acceptability of requested deviations. The remaining portions of the paragraph not underlined will signify compliance on the part of the Contractor with the specifications. *Failure to include a copy of the marked-up specification sections, along with justification(s) for any requested deviations to the specification requirements, with the submittal shall be sufficient cause for rejection of the entire submittal with no further consideration.*

2. Manufacturers literature and dimensional drawings showing the equipment and clearances required for maintenance purposes.

3. Equipment schematic and control diagrams.

4. Detailed electrical wiring diagrams.

5. Testing and adjusting instructions

6. Installation instructions.

1.03 ENVIRONMENTAL CONDITIONS

The equipment specified in this section will be located outdoors. Climatic conditions are as specified in Section 01800.

PART 2--PRODUCTS

2.01 ACCEPTABLE PRODUCTS

The Owner and Engineer believe the following candidate manufacturer is capable of producing equipment and/or products that will satisfy the requirements of this Section. This statement, however, shall not be construed as an endorsement of a particular manufacturer's product, nor shall it be construed that a named manufacturer's standard product will comply with the requirements of this Section. Candidate manufacturers include American Sigma, ISCO, or approved equal.

2.02 EQUIPMENT

A. GENERAL:

The refrigerated samplers shall be designed for outdoor and hazardous installations. The samplers shall be suitable for the representative collection and preservation of wastewater samples, which may contain toxic and conventional pollutants. The samplers shall incorporate a high-speed peristaltic pump for collection of the sample liquid.

For the elevated tank and closed conduit cases the liquid shall be sampled from the flow through cell. The sample shall be collected on command by a remotely opening solenoid valve to allow the liquid to flow into the flow-through cell.

The sample pump shall produce a minimum intake velocity of 2 feet per second at 20 feet vertical lift in a 3/8-inch inner diameter intake line. The pump shall purge the intake line before and after each sample. The duration of the purge shall be automatically adjusted for varying intake line lengths. The pump tubing shall be 3/8-inch inner diameter by 5/8-inch outer diameter medical grade silicone. The sampler shall be provided with 3/8 inch inner diameter Teflon-lined polyethylene intake tubing and a weighted strainer constructed of 316 stainless steel and Teflon. The intake tubing shall be 100 feet.

Exterior sampler dimensions shall not exceed 54-inches high by 30-inches wide by 36-inches deep.

All electromechanical components shall be protected in a sealed housing conforming to NEMA 4X and NEMA 6 standards for submersible, watertight, and corrosion resistant operation.

B. SAMPLE CHAMBER:

The refrigerated sampler cabinet shall be constructed of corrosion resistant, resin transfer molded fiberglass. All cabinet exterior surfaces shall be UV resistant and sloped so as to shed water. The unit shall not require a secondary enclosure. The sample compartment

door shall have a compressible gasket seal and positive mechanical latch. Refrigerator assemblies utilizing magnetic seals will not be considered acceptable. The controller and sample compartment shall be independently lockable. The sampler shall have four adjustable base pads for leveling and shall have a stainless steel channel on the right and left sides for anchoring to a concrete pad.

All electro-mechanical components shall be protected from humidity and corrosive gases within a sealed injection molded ABS plastic housing conforming to NEMA 4X standards for submersible, watertight, dust-tight, corrosion resistant and ice resistant operation. All receptacles shall be sealed and shall not require capping to be watertight. The electronics housing shall contain silica gel desiccant and shall be provided with an indicator showing relative humidity within the controller housing.

C. REFRIGERATED SAMPLE COMPARTMENT:

The temperature control system shall maintain 4 degrees C (+/-1 degree C) in the refrigerated compartment in ambient temperatures from -40 to 120 degrees F. Provide an evaporator plate heater for frost-free operation. Refrigerated compartment temperature shall be indicated on the sampler controller display.

The compressor assembly shall be mounted above the sample compartment. A compressor located at floor level shall not be acceptable. The compressor compartment shall be side ventilated to allow for installation against a wall. The refrigerated sample compartment shall be insulated. All refrigeration lines shall be protected with a phenolic resin coating. The thermostat/thermal control system shall be housed within a NEMA 4X enclosure.

To prevent sample liquid from freezing in pump tubing, and to enhance display readability in cold ambient temperatures, the sampler shall be furnished with a 500 watt microprocessor-controlled controller compartment heater.

D. BOTTLES, TRAYS AND DISTRIBUTION ARMS:

The sampler control logic shall be programmable for single container or multiple bottle sampling. Each sampler shall be provided with all equipment required for both multiple bottle (discrete) sampling and single bottle (composite) sampling. The samplers shall be convertible from composite sampling to discrete sampling by installing a modular distribution assembly and replacing the composite container with a discrete bottle set. The sampler shall be convertible from discrete to composite operation by removing the modular distribution assembly and replacing the discrete bottle set with a composite container.

The following bottles shall be provided for each sampler: four 2.5-gallon glass bottles (discrete); two 6-gallon polyethylene containers (composite); and two 5.5-gallon glass bottles (composite).

E. CONTROLS:

Samplers shall be designed for automatic and manual operation.

The controller shall have a hermetically sealed keypad and self-prompting alphanumeric liquid crystal display. The unit shall have the capability of retaining a minimum of 5 complete sampling programs/routines in memory. A program lock shall be provided to preclude tampering by unauthorized personnel. The sampler shall be equipped with a clock providing time and date. It shall be possible to delay the start of the sampling program. The delay shall be independent of the sampling interval and shall be accomplished by setting the actual sample program start time and date.

The sampler shall be capable of operation in a timed or flow proportional mode. In the timed mode, the interval between samples shall be adjustable in one-minute increments from 1 to 9,999 minutes. In the flow mode, the sampler shall be capable of totalizing from 1 to 9,999 flow signals. Flow proportioning shall be based on an external 4-20mA signal. The sampler shall be equipped with a non-contact ultrasonic liquid sensing system whereby the pump flow rate is calculated every collection cycle and the pumping time is automatically adjusted to assure constant sample volume.

The desired chamber temperature shall be enterable on the sampler keypad and indicated on the display. The thermal control system shall be digital microprocessor-based and shall respond to a system of temperature sensors, which shall continually monitor the evaporator plate, ambient air, and sample liquid.

F. OPERATION:

The sampler shall be programmable for up to 12 start/stop intervals. The sampler shall also have the capability for programming up to 99 independent and non-uniform intervals between sampling events.

In the multiple (discrete) mode, the sampler shall be capable of depositing multiple samples per bottle, or each interval depositing sample liquid to 1 to 24 bottles. The sampler shall allow for a time override mode that enables the unit to advance the distributor arm on a timed basis while collecting samples in proportion to flow rate. In the composite mode, it shall be possible to preset the number of samples to be delivered after which operation shall automatically terminate.

In the composite mode, it shall be possible to select the number of samples from 1-999 to be collected (after which sampler operation shall automatically terminate) or to sample continuously. As a further overflow precaution, the composite container shall have a shutoff float, which shall immediately stop the pump in the event of a full container.

One keystroke shall provide the program status including refrigerated sample temperature, the time and date program started, minutes or flow signals remaining until the next sample, bottle number, number of samples collected, number remaining, volume collected, and volume remaining. The sampler shall have an internal solid state datalogger, which records up to 400 sample collection times and dates. Further, it shall be possible to quickly determine all program settings as well as to provide a review of the completed program.

The sampler shall be capable of rinsing the intake line with the source liquid immediately prior to collection. The number of rinses shall be selected from 1 to 3 or bypassed. In the event that sample liquid is not obtained on the initial attempt, the sampler shall automatically purge

and repeat the collection cycle. The number of repeated attempts shall be selected from 1 to 3 or bypassed. In the event of a third unsuccessful attempt, the sampler shall stop until the next sampling interval. The time and date of any missed sampling event shall be indicated during the program review. Further, the sampler shall have the capability for initiating a manual sample independent of the program in progress.

Samplers provided with a flow through cell shall be provided with a module that will produce a pre-sample purge signal for a set time before and during the time a sample is taken. This will be used to operate a valve to run fresh process fluid through the flow through cell from which the sample is to be taken. Interposing relay shall be provided as required to provide a non-energized dry contact rated for 7A inductive load at 120VAC. If not integral to sampler, control module and relay shall be provided in a NEMA 4X enclosure.

G. FLOW-THROUGH CELL:

Where specified the manufacturer shall provide a flow-through cell for sample collection. The flow-through cell shall be provided for pressurized conduit and elevated tank applications to allow the sample to be collected from the cell under open channel flow conditions. The flow-through cell shall have flanged end connections and shall be constructed of three-inch diameter 316L stainless steel. The flow-through cell shall have the appropriate connections to allow for insertion and adjustment of the sample collection tube.

2.03 PRODUCT DATA

The following information shall be provided in accordance with Section 01300:

1. Operation and maintenance information items 2 through 9 as specified in Section 01730.

2.04 SPARE PARTS AND SPECIAL TOOLS

Manufacturer shall provide one full set of all special tools needed for routine maintenance and adjustment of the equipment. The following spare parts shall be provided.

Item	Total Quantity
Peristaltic pump tubing	Sufficient length for fifty replacements
Intake tubing	100 feet

PART 3--EXECUTION

3.01 INSTALLATION

The equipment shall be installed in accordance with the manufacturer’s recommendations. The installation shall be certified on form 11000-A in Section 01999.

3.02 TESTING

After completion of the installation, the sampler shall be tested in accordance with Section 01660 to verify compliance with this specification.

3.03 TRAINING

Manufacturer's service representative shall provide a minimum of 8 hours of training. Training shall conform to Section 01664 and shall be certified on Form 11000-B in Section 01999.

END OF SECTION

SECTION 12345

WOOD LABORATORY CASEWORK

PART 1 - GENERAL

1.1 SUMMARY:

A. Work of this section includes laboratory furniture which includes but is not limited to wood furniture, countertops, reagent shelves, tables, standards, slotted studs, filler panels, scribes, knee space panels, accessories, utility space framing, utility space closure panels between base cabinets and at exposed ends of utility spaces, laboratory sinks, cup sinks, cup drains, strainers, overflows and sink outlets and miscellaneous items of equipment as listed in the specifications or as shown on drawings.

B. Work includes laboratory furniture depicted on drawings or listed in these specifications unless otherwise noted as “not in contract” (NIC) within the drawings, equipment schedule or said specifications.

B. Related work specified elsewhere:
1. Custom cabinets.
2. Laboratory Equipment.
3. Plumbing Fixtures.

C. Related work to be performed by other trades:
1. Final installation of plumbing, service and electrical fixtures attached to furniture or countertop.
2. Final connection to service lines of plumbing, service and electrical fixtures attached to laboratory furniture.

1.2 REFERENCES:

A. Architectural Woodwork Quality Standards Illustrated. Eighth Edition, Version 1.0. Virginia: 2003. Architectural Woodwork Institute.

B. ANSI/Hardwood Plywood Veneer Association Manual Version ANSI/HPVA HP-1-2009

1.3 DEFINITIONS:

A. “Barrel Hinge”: Hinge composed of two plates attached that are attached to abutting surface.

B. “Chamfer Edge”: Edge treatment for edge banding where a 45 degree planning is applied to the edge at 1mm in a clean crisp manner. Edges on door, drawer and applied accent faces shall be treated in that manner for the entire project when listed.

C. “Concealed hinge”: Hinge that has no components visible from the outside of the cabinet.

D. “Concealed Portions of Furniture”: Surfaces that are not visible after installation; bottoms of cabinets are less than 30" above finished floor; tops of cabinets are 72" or more above finished floor (and are not visible from an upper level); stretchers, blocking and/or components are concealed by drawers; corners are created by tall, wall, or base cabinets and shall be non-accessible.

E. “Eased”: Process of providing a slight radius on door and drawer fronts of a cabinet.

F. “Exposed surfaces”: Surfaces that are visible when: Drawer fronts and doors are closed; cabinets and shelving are open or behind clear glass doors; bottoms of cabinets are seen 48" or more above the finished floor; tops of cabinets are seen below 72" above finished floor, or are visible from an upper floor or raised area after installation

G. "False Fronts": Nonfunctional fronts attached to particular units that mimic drawer box fronts to create an uninterrupted visual image of an elevation.

H. "Flush Inset": Occurs when doors and drawer faces are inset within the side members of the cabinet in the same plane.

I. “Flush Overlay”: Furniture design that requires AWI reveal of 1/8” between individual door and drawer components within a cabinet and within an elevation.

J. “Laboratory Furniture Contractor/Manufacturer”: Manufacturer and/or manufacturer’s representative that is to provide and install the laboratory furniture and accessories listed in specifications, and/or illustrated on drawings.

K. “NAUF”: “no added urea formaldehyde”. This is required when no part of the wood product or any product on the entire can contain added urea formaldehyde in the production of the products.

L. “Pure square edge”: Exact 90 degree angle at edge of door and drawer front. Pure square edge requires the addition of adjusting hardware within the drawer head to align the individual cabinets in an elevation.

M. “Reveal”“ Measurement between individual door and drawer components on face of a cabinet.

N. “Semi-exposed”: Surfaces that are visible when: opaque doors are open or drawers are extended; bottoms of cabinets more than 30" and less than 42" above finished floor.

O. “Service fixtures”: Laboratory gas, air, and vacuum cocks; hot, cold and reagent water faucets; remote control valves, electrical receptacles (with necessary flush mounting hardware), fluorescent and/or incandescent light fixtures , light switches and/or motor switches for fume hoods and other items which serve as an operational part of the equipment.

P. “Service lines”: Necessary piping and drain lines for laboratory gas, air and vacuum as well as hot, cold and reagent grade water that conveys the respective services from building roughing through floors or walls through equipment to the previously defined service fixtures. Also includes conduits, junction boxes, conduit fittings, wire disconnect switches and fuse or circuit breakers necessary to conduct electrical services from building roughing in floors or walls through equipment to service fixtures.

Q. “Zone matching”: Process of sorting veneer faces to an aesthetically pleasing range for the purpose of maintaining aesthetic quality within the manufacturing process.

1.4 SYSTEM DESCRIPTION:

A. Cabinet and furniture area design:
1. Offset flush overlay with 1/8” reveal between intra-cabinet doors and drawers and 9/32” reveal at cabinet edge for offset of the hinge around the door.
2. Veneer grain on door and drawer fronts are to be vertical on doors and horizontal on drawers.
3. Doors and drawer fronts are to be slightly eased at all edges.
4. 1/8" roll edge banding will be used for all banded edges.
5. Shelving for open shelves will be edge banded all four sides.

1.5 SUBMITTALS:

A. Product data and details:
1. Drawings shall include data and details for construction of laboratory furniture as well as information regarding the name, quantity, type and construction of materials (such as hardware, gauges, etc), that will be used to complete the project.
2. Manufacturers’ instructions: Provide manufacturer’s instructions for installation and maintenance of all products provided and installed within this section. Instructions should be in bound form, tabbed and organized by section number.

B. Shop drawings: Submit shop drawings illustrating layout and placement of laboratory furniture as well as products specified herein.

1. Identify deviation in dimension, material, detail, or other aspect of the project that is not concurrent with the contract documents. Deviations not made apparent will be deemed as “not reviewed”, and will have to be altered even if not recognized during the approval phase.
2. Field measurements: In instances in which furniture is indicated to fit to other construction, verify dimensions by field measurements before fabrication and reflect on shop drawings.
3. Manufacture or purchase of equipment prior to approval by Owner’s representative will be undertaken at the manufacturer’s risk.

C. Samples: Submit, preceding the construction of the specified mock-up, the following samples for approval by the Owner’s representative.

1. One (1) 24” wide, full-height base cabinet: Construction to consist of one (1) drawer, one (1) door, one (1) cupboard with adjustable half/full depth shelf and related hardware (pulls, hinges, drawer slides, etc.), complete with finish.
2. One 36” wide x 36” high wall cabinet: Construction to consist of two adjustable shelves as well as related hardware and doors, complete with finish.
3. Stain and finish samples:
   a. A minimum of ten (10) 8" by 8" manufacturer’s samples, constructed of the same material from which the furniture will be constructed, stained and clearly identified, shall be submitted to Architect for color selection.
   b. Stain and finish samples will be retained by Architect and/or Owner’s representative.

D. Design data/test reports: Submit test data and design criteria which are in compliance with the project specifications. Testing of safety devices and performance criteria shall be performed by a 3rd party validator.

E. Certificates: certifications required in this specification shall be submitted with the original submittal package under separate cover. Certificates must be provided with the signature of a qualified individual of the supplier.

1.6 QUALITY ASSURANCE:

A. Qualification of manufacturer shall have completed ten (10) installations of comparable stature within the past 5 years.

B. Installer Qualifications: For installation and maintenance of units, installer shall be an authorized representative of the casework manufacturer.

C. Source limitations: All furniture, including countertops, sinks, service fittings and accessories, should be obtained from a single manufacturer to ensure consistency.

D. Mock-ups: Area mockups shall be as indicated on the shop drawings. Acceptable mockup areas may be used within the project

1.7 DELIVERY, STORAGE AND HANDLING:

A. Packaging, shipping, handling and unloading:

1. Packaging: Products should have packaging adequate enough to protect finished surfaces from soiling or damage during shipping, delivery and installation.
2. Delivery: Furniture delivery should only take place after painting, utility rough-ins and related activities are completed that could otherwise damage, soil or deteriorate furniture in installation areas.
3. Handling: Care, such as the use of proper moving equipment, experienced movers, etc., should be used at all times to avoid damaging the furniture. Until installation takes place, any wrapping, insulation or other method of protection applied to products from the factory should be left in place to avoid accidental damage.

B. Acceptance at site: Furniture shall not be delivered or installed until the conditions specified under Part 3, Installation section of this document have been met.

C. Storage: Furniture should be stored in the area of installation. If, prior to installation, it is necessary for furniture to be temporarily stored in an area other than the installation area, the environmental conditions shall meet the environmental requirements specified under the Project Site Conditions article of this section.

1.8 PROJECT SITE CONDITIONS:

A. Building shall be enclosed (windows and doors sealed and weather-tight):

B. An operational HVAC system that maintains temperature and humidity at 50 percent relative humidity plus or minus 15% and temperature 72 degrees plus or minus 5 degrees in all areas of the building. Uncontrolled acclimatization will not be allowed. The use of temporary heat is not allowed under any circumstances due to imminent damage to panel products produced with environmentally friendly adhesives. The use of temporary cooling is allowed to the extent that adequate control of both temperature and humidity is in effect.

C. Ceiling, overhead ductwork and lighting shall be installed.

D. Site shall be free of any further construction such as “wet work.”

E. Required backing and reinforcements shall be installed accurately and the project shall be ready for furniture installation.

1.8 WARRANTY:

A. Furnish a written warranty that Work performed under this Section shall remain free from defects as to materials and workmanship for a period of one (1) year from date of Substantial Completion. Defects in materials and workmanship that may develop within this time are to be replaced without cost or expense to the Owner. Defects include, but are not limited to:
1. Ruptured, cracked, or stained coating.
2. Discoloration or lack of finish integrity.
3. Cracking or peeling of finish.
4. De-lamination of components or edge banding.
5. Slippage, shift, or failure of attachment to wall, floor, or ceiling.
6. Weld or structural failure (visible weld marks).
7. Warping or unloaded deflection of components.
8. Failure of hardware.

PART 2 - PRODUCTS

2.1 MANUFACTURERS:

A. Acceptable manufacturers:
1. Thermo Scientific, Collegdale Casework.
2. Fisher Hamilton.
3. Kewaunee Scientific Corp.
4. Leonard Peterson & Co., Inc.

2.2 MATERIALS:

A. Laboratory furniture:
1. Solid lumber used:
a. Hardwoods shall be air-dried, and then kiln dried to a moisture content of 6-9 percent before use.
b. Exterior wood furniture surfaces exposed to view after installation, exposed exterior ends and tops and bottoms of open cases or cases having glazed doors; shall be rotary sap maple. Provide Grade 1 FAS.
c. Solid woods used for surfaces exposed to view after completion of installation shall be clear, with color and graining to aesthetically match the adjacent veneer surfaces.
d. Interior parts fabricated of hardwood shall be rotary sap maple. Grade 1 FAS.

2. Exposed veneer:
   a. Veneer used for exterior surfaces exposed to view after installation, and exposed interior ends, tops and bottoms of open cases shall be constructed of Grade B (with modifications to grade), rotary whole piece face maple, book matched of at least 1/45" thick veneer modified for appearance and manufacturing of faces as indicated below.
   b. Deviations and clarifications of ANSI/HPVA standards.
      1) Color, matching, fabrication: 100% Sapwood, no heartwood.
      2) Natural characteristics. As allowed by ANSI standard.
      3) Manufacturing characteristics. Rough cut or ruptured grain will not be allowed and repairs shall be blended so as not to detract from aesthetic appearance of exposed cabinet part.
   c. Door and drawer fronts shall be vertically grain matched per door/drawer sets.
3. Semi-exposed veneer:
   a. Veneer faces used for semi-exposed areas shall be constructed of rotary whole piece face maple, component faces, grade B, either plain sliced or rotary sliced, random matched.
   b. Interior shelves shall be banded with 1/8" rotary whole piece face maple hardwood on front edge.
4. Plywood core construction for furniture body, interior shelving, wall shelving. Construct 3/4” plywood panels as 7 ply combination core hardwood plywood with composite crossbands. Construct 1” panels as 9 ply combination core hardwood plywood with composite crossbands. Face and back (exposed and semi exposed) panels shall be produced from domestic sources; import panels are not allowed for exposed/semi exposed surfaces. Import panels can be used on semi to unexposed or unexposed to unexposed surfaces except that construction shall not exceed the 7 ply standard herein. Panels, either domestic or import, that exhibit ply construction either above or below the specific ply listed will be rejected. All panels shall be manufactured without the use of added urea formaldehyde. Panel shall be manufactured in a two step process wherein the five ply core is processed, sanded smooth, calibrated and the veneer is applied to a sanded core and shop sanded to a minimum of 180 grit. Finished panel shall have a thickness tolerance plus or minus .25mm. Plywood used for shelving shall be 9 ply 1” hardwood plywood constructed in same manner as 3/4” plywood.
5. Plywood core construction for doors/drawer heads/applied panels: Construct 3/4” plywood panels as 3 ply M2 particleboard. Produce face and back (exposed and semi exposed) panels from domestic sources; import panels are not allowed for exposed/semi exposed surface. Panels shall be manufactured without the use of added urea formaldehyde.

Manufacture panels in a two step process wherein inner core is processed, sanded smooth, calibrated and veneer is applied to a sanded core and shop sanded to a minimum of 180 grit. Finished panel shall have a thickness tolerance plus or minus .25mm.

6. Hardware and Trim:
   a. Door and drawer pulls: Shall be modern design, offer a comfortable hand-grip and be securely fastened to doors and drawers with screws. Pulls shall be chrome wire type with 4 inch centers and without escutcheons. Two pulls shall be required on all drawers over 24 inches wide. Use of plastic pulls (molded or extruded), or a design not compatible for usage by handicapped will not be acceptable.
   b. Flush pulls: For sliding doors, pulls shall be satin finish chrome, providing a recessed finger grip. Finger holes or slots machined into doors will not be acceptable.
   c. Hinges: Shall be five (5) knuckle 2.75” grade 1 type 304 stainless steel for all hinged doors. Two hinges for doors less than 4 ft. in height and three hinges on doors over 4 ft. in height.
   d. Locks:
      1) Furniture drawers and hinged doors: Shall be provided when indicated by the specified product number, shown on drawings or called for in furniture schedule. Exposed surface of locks shall be dull chrome. Locks, for purpose of coordinating keying systems, shall be National five (5) tumbler. These shall be furnished with master keys, and grand master keying.
      2) Framed glass doors: Locks shall be plunge type sliding showcase locks which are to be of the same make as those selected above.
      3) Sliding glass doors: Locks shall be ratchet type sliding showcase locks which are to be of the same make as those selected above.

7. Door catches:
   1) Roller catches: Shall be used on all hinged doors. Catches shall have a spring-loaded dual polyethylene roller and are provided with a steel strike plate. Double doors without locks shall have a catch on each door. Tall cases shall have latching devices located on upper and lower part of each door. On cabinets equipped with locks, the left-hand door shall have a positive catch and the right hand door shall have roller type catch.
   2) Elbow catches: Catches and strike plates shall be used on left hand doors of double door cases where locks are used, and shall be steel, cadmium plated.

8. Drawer slides: Drawer slides for standard drawers shall be 100 pound ball 3/4 extension ANSI/BHMA Grade 1, TFS model #5000. Slides

for file drawers, heavy-duty paper storage drawers shall be Grade 1, 150 pound full extension TFS # 9677.

9. Leg shoes: Shall be provided on table legs, unless otherwise specified, to conceal leveling device. Shoes shall be 2-1/2" high and constructed of pliable, ABS plastic. Use of a leg shoe which does not conceal leveling device will not be acceptable.
10. Tote trays: Shall be tan color vacuum-formed plastic type with full top rim in standard sizes. Each tote tray is equipped with plated steel label holder.
11. Coat rods: Shall be KV #770 chrome plated 1 inch diameter steel with KV #764 rod flanges (or approved equivalent).
12. Support struts: Shall consist of two 16 gauge channel uprights fastened top and bottom by two adjustable “U” shaped spreaders, each 1/8 inch by 1 and ½ inches by length required. Struts can be furnished to support fume hood superstructures or other abnormal loads when required. Support struts shall be finished with a black, enamel paint.
13. Shelf support clips: Shall be plastic twin pin seismic type, for mounting on interior of cabinets. Clips shall be corrosion resistant and shall retain shelves from accidental removal. Shelves are adjustable on 32 mm centers.
14. Tempered hardboard: Wood-fiber and resin combination formed with heat and pressure into a hard, smooth surface.

B. Special materials:
1. Fiberglass reinforced polyester: Reinforced polyester panels for laboratory use specifically designed to be corrosion and flame resistant lining for fume hoods and certain acid storage units. Exposed surface shall be smooth in appearance and white in color. Material has a flexural strength of 19,500 PSI and water absorption of 0.2%.
2. Glass:
   a. Glass for framed and unframed doors shall be ¼” thick clear laminated safety glass, complying with ASTM C1172, Kind LT, Condition A, Type 1, Class 1.
   b. Glass used in fume hood sashes or other equipment used in hazardous areas shall be 7/32 inch thick laminated safety float type. Fluorescent light shielding in fume hoods shall be tempered glass offering greater resistance to heat and impact.

C. Special units:
1. Acid storage base cabinet: Cabinet exterior is to match type of wood, stain, color and finish of adjacent cabinetry but is to be lined with corrosion resistant material equal to the fiberglass reinforced polyester described in the “Special Materials” section of this document. Venting, if required, is to be accomplished through the use of a PVC vent pipe through the back of the cabinet.

2. Flammable cabinet: Cabinet exterior is to match type of wood, stain, color and finish of adjacent cabinetry but is subject to the following differences:
   a. Inset overlay: Doors are set within the members of the frame to allow for the creation of a near airtight seal when closed. Reveals reflect panel width and are 1" around the entire face of the cabinet.
   b. NFPA 30 Compliant/UL listed: Cabinet is constructed to limit the internal temperature at the center of the cabinet and 1 inch from the top of the cabinet to no more than 325 degrees Fahrenheit when subjected to a 10 minute test that simulates fire exposure. All joints and seams are designed to remain tight and the door shall remain securely closed for the duration of exposure to flame/heat of the same duration of the test.
   c. Exposed plywood: Properties pertaining to plywood used for exterior surfaces and doors remain consistent with the properties already specified under the Exposed Plywood section of Laboratory Furniture with the following exception: The plywood used for exterior surfaces and doors shall be constructed from 1" thick plywood as opposed to a 3/4" thick material.
   d. Hardware and trim:
      1) Door pull & catch: Door pulls and catches shall be part of an integrated 3 point latching system that offers a comfortable hand-grip and be is securely fastened to doors with zinc screws.
      2) Hinges: Full-length piano style hinge.
   e. Cabinet construction:
      1) Cabinet end panels, top, bottom and back shall be 1", 9 ply rotary whole piece face maple plywood meeting the same veneer quality requirements as indicated in Section 1.2A.2.with 1/8" hardwood edgebanding. The entire structure including end panels, top, bottom and back shall be of rabbet joint construction with each joint secured from two directions with countersunk screws affixed to hardwood blocking from the interior of the cabinet. The unit will be equipped with gasketing and a keyed astragal to totally seal the interior of the cabinet from the outside. All base units shall have a removable drip tray recessed within the blocking capable of retaining a 2" depth of spilled liquid.

      2) Doors: Doors shall be fabricated using 1" solid plywood core. All four showing edges shall be edge banded with 1/8" hardwood. Piano hinges will be attached via zinc screws to the interior of the cabinet.

2.3 FABRICATION:

A. Open-leg tables:
   1. Legs shall be 1 whole piece maple hardwood construction, 2-1/4" square with all corners eased slightly. Legs shall be secured to the apron frame by a heavy duty corner bolt and a 16 gauge metal corner brace.
   2. Corner braces shall be locked into apron rails by accurately located grooves and shall be securely fastened with screws.
   3. Apron rails shall be 3/4" thick solid rotary whole piece face maple hardwood.
   4. Leg stretchers, where required, shall be 3/4" by 3" utilizing an 8mm dowel with a countersunk #10 screw assembled into legs and secured with a 4" long thru-bolt.

B. Base cabinets (hinged door and drawer):
   1. Cabinet end panels shall be 3/4" rotary whole piece face maple plywood with 1/8" by 3/4" rotary whole piece face maple hardwood face.
   2. Unexposed cabinet backs shall be 1/4" thick grade “B” plain sliced or rotary sap maple plywood. Cupboard, sink and fume hood units shall be provided with removable back panels allowing access to plumbing chase. Back panels in cupboards shall be removable without the use of hand tools or fasteners; sink and fume hood base cabinets shall be provided with 12 inch high removable back attached with 5/8 inch screws and washers. Backs are not provided for drawer bank cabinets. Backs behind solid panel doors shall be 1/4” plywood and backs semi-exposed behind panel doors shall be 1/4” plywood.
   3. Cabinet backs exposed to view shall be 3/4” rotary whole piece face maple hardwood plywood.
   4. Cabinet bottoms shall be 3/4" plywood. All base units less than 36" wide shall have full-depth adjustable shelves, 3/4 inch thick plywood with 1/8" red oak edge banding on exposed front edge. Adjustable shelves for cabinets over 36" wide shall be 1" thick.
   5. Furniture toe space shall 3/4” hardwood plywood, 3-1/2" deep by 4" high.
   6. Web Frame components:
      a. Top horizontal:
         1) Front rail: 2-1/4" by 1" solid sap maple.
         2) Side and rear rails: 2-1/4" by 1" hardwood, any species.
      b. Intermediate horizontal:
         1) Front rail 2-1/4" by 1" solid sap maple.
         2) Rear rail 2-1/4" by 1" solid hardwood, any species. Required with security panels.

C. Doors and drawer fronts: Doors and drawer fronts shall be fabricated using 3/4" rotary whole piece face maple. Four showing edges (if not lipped or bull nose construction), shall be edge banded with 1/8" rotary whole piece face maple hardwood. Grain direction for knee space false-fronts to match adjacent furniture.

Drawer front will be machined with integral adjusters mortised into the body to ensure field alignment of reveals.

D. Drawer boxes: Shall be fabricated of 1/2” solid birch, 9 ply birch or maple plywood with dovetail joints all four corners. Drawer bottoms shall be 1/4” hardwood plywood of the same species as the furniture, set and glued into 1/4" grooves on all four sides. Drawer heads shall be replaceable in case of damage. Drawer heads shall be attached to the drawer boxes with wood screws.

E. Tall sliding door cases: Cases shall be designed and integrally constructed for full enclosure. All exposed woods shall be rotary whole piece face maple. End panels shall be 3/4" thick rotary whole piece face maple plywood with a 1/8" by 3/4" rotary whole piece face maple edgebanding. Tops for open or glazed door cases shall be 1" thick rotary whole piece face maple plywood, doweled into end panels, secured with glue and countersunk screws. The top in solid door cases shall be 1" thick rotary whole piece face maple plywood with 3/8" by 2" rotary whole piece face maple hardwood faces applied to conceal the overhead sliding-door suspension system. Double extruded aluminum track shall be attached to the case top for the sliding door suspension system.

1. Doors shall be suspended from an adjustable hanger and glide on nylon roller wheels. A nylon retainer is located on the case bottom. Panel doors shall be fabricated using 3/4" thick with all four edges edge banded with rotary whole piece face maple veneer. Wood framed glazed doors shall have 3/4" by 3" hardwood rotary whole piece face maple framing. Glass shall be set into door frames and secured with an extruded neoprene retainer machined to eliminate movement of the glass panel. Shelves shall be 1" rotary whole piece face maple plywood with 1/8" by 1" rotary whole piece face maple banding on front edge. The center shelf is doweled and glued to the end panels. All other shelves (4) are adjustable on 32mm centers.
2. Case bottoms shall be 3/4" rotary whole piece face maple plywood with 1/8 inch x 3/4 inch rotary whole piece face maple edge banding on front edge. Case bottoms shall be doweled and glued securely to end panels. Case interiors shall be flush. Totally enclosed toe space shall be 3 and ½" deep by 4" high for base units. Other sizes and materials are as follows:
   a. End panel: 3/4", rotary whole piece face maple plywood with 1/8" by 3/4" rotary whole piece face maple.
   b. Top face: 3/4" by 2" solid rotary whole piece face maple on sliding door cases.
   c. Bottom: 3/4" rotary whole piece face maple plywood, exposed to view, 3/4" hardwood plywood, semi exposed or unexposed.
   d. Toe space Rail: 3/4" by 4" hardwood plywood.

F. Full height hinged door cases: General construction features shall be the same as for sliding door cases except for the following: Solid or framed glass doors are

to be hung on three institutional type hinges. Hinged doors shall overlap openings on four sides.

G. Counter mount or wall hung sliding door cases:
   1. Construction and materials shall be the same as for full height type cases with the following exceptions:
      a. Tops and bottoms shall be a minimum of 1 inch thick rotary whole piece face maple hardwood plywood.
      b. Solid panel doors shall be fabricated using 3/4" plywood with core and grain matching adjacent furniture.
   2. Wood framed glass doors shall have 3/4" by 3" solid hardwood framing.
   3. Solid sliding glass doors shall be 1/4" thick float glass with polished edges and ground finger groove.
   4. Doors shall set in an aluminum bottom frame containing roller bearings and held in position with an aluminum guide at the top of the case.

H. Counter mounted or wall hung hinged door cases: Construction and materials shall be the same as for sliding door cases with the following exception: Solid panel or glass framed doors on cases less than 48" in height shall be hung on one pair of institutional type hinges. Doors on cases 48" high and over shall have three institutional type hinges. All doors shall overlap opening on all four sides.

I. Finishes:
   1. Chemical Resistant wood finish: The finishing process described in this section shall result in a highly chemical resistant finish that is equally suitable for an AWI premium finish application. A minimum of three pass exposed and two pass semi-exposed is required along with appropriate steps for minimizing barber pole effect and glue line exposure to assure a high quality veneer appearance. Prior to application of the wood finish, case and cabinet surfaces shall be sanded to remove loose fibers, scratch marks and abrasions in the sequences described below. Dust shall be removed from the panel prior to finish application. The finishing technology utilized shall be either 100% solids UV, water borne compression spray UV or water borne traditional compression spray.
   2. Finishing processes allowed:
      a. 100 percent solids ultraviolet cured: The finish utilized shall be a 100% solids mixture formulated for application with automated roll coat technology cured with ultraviolet light.
      b. Ultraviolet cured water borne compression spray: The finish utilized shall be water borne mixture formulated for use in a modern sealed compression spray UV tunnel cured with ultraviolet light. The topcoat must be increased to the quantity required to meet the chemical resistance in this specification.
      c. Traditional water borne compression spray: The finish material shall be water borne compression spray. Water borne topcoats

must be increased to the quantity required to meet the chemical resistance required in this specification.

3. Wood finish application finishing applications require the use of a series of steps that shall be followed for compliance to this specification. This section applies to UV cured roll coat applications. Compression spray applications shall assure equivalent performance. Sanding steps shall be followed to comply with the appearance standards required by this specification.
   a. 400 grit cross-belt sanding (not required for plain sliced red oak). Each exposed veneer panel shall be thoroughly sanded with modern wood processing equipment with 400 grit paper at a 30 degree angle to assure minimum barber pole and component glue line exposure.
   b. 180 grit wide belt sanding. After cross belt sanding, each part that is to receive either stain or finish shall be thoroughly sanded with modern wood processing equipment with 180 grit paper in the direction of the grain. This process opens the grain for proper application and stain consistency.
   c. 220 grit wide belt sanding. After 180 grit sanding, each part that is to receive either stain or finish shall be thoroughly sanded with modern wood processing equipment with 220 grit paper in the direction of the grain.
   d. Staining: Staining (if required). If a stain color is selected, exposed and semi-exposed surfaces shall be stained in a manner which allows for a consistent application of stain over all surfaces. Application shall ensure areas are consistent and visible splotchy areas are not allowed.
   e. Fill coat: A pressed in coat of filler material must be applied to all species. Open grain species such as red oak, white oak, ash, beech shall be filled at each pass assuring that grain is “filled” leaving no open pores. Fill coat shall be set to approximately .2 millimeters in thickness or as required to fill grain of species selected.
   f. Pre-top coat cure: Fill coat shall be gelled to a minimum of 50% cure prior to application of top coat.
   g. 1st top coat: After passing fill process, product shall enter a dual stage top coat process. A first stage roller shall apply coating material in mass proportion to assure all parts of the panel are properly coated.
   h. 2nd top coat: A tandem top coat station shall then both re-apply and smooth the finish over the panel. Process shall assure a smooth and consistent application finish material evenly over the entire product.
   I. Cure: Product shall then be 100% cured with a dual ultraviolet light system or heated oven for traditional spray systems.

j. 320 grit scuff sanding. Each panel shall then be sanded with 320 grit paper ready for re-application of top coat.

k. 3rd pass top coat: Each part shall again pass a single stage top coat process. Process shall assure a smooth and consistent application of finish material evenly over the entire product.

l. Cure: Product shall then be 100% cured with a dual ultraviolet light system or heated oven for traditional spray systems.

m. Top coat process must be repeated as many times as are required to meet the chemical resistance requirements of this specification.

1. Final process shall allow for a finish material thickness minimum of 2.0 mils for UV coatings and 3.0 mils for compression spray systems. Finishes shall be applied under atmospheric conditions that do not adversely affect both the chemical resistance and aesthetic characteristics of the finish. Once applied, finishes shall be tested with the series of chemicals as listed in the SEFA guidelines.

2. Finish shall then be tested against SEFA guidelines. Certified 3rd party reports shall be presented upon request.

2.4 CAST EPOXY RESIN TOPS:

A. Type: Modified epoxy resin, factory molded; uniform composition throughout.

B. Characteristics:

1. Thickness: 1-1/4".
2. Sizes: Full widths indicated; 6'-0" minimum lengths.
3. Edges: Radiused.
4. Joints: Butt type with concealed metal splines, secured by filling with epoxy adhesive.
5. Backsplashes and endsplashes: 3'4" thick.
6. Color: Non-specular black or other color as selected by Architect from manufacturer's premium color range.

C. Physical properties:

1. Flexural strength: 4000 psi.
2. Compressive strength: 14,000 psi.
3. Hardness (Rockwell M): 197.
4. Water absorption (24 hours): 0.05%.
5. Heat distortion point: 400 degrees F.

D. Chemical resistance: Withstanding spot tests using standard laboratory concentration of the following for 24 hours, exhibiting only slight loss of luster in finish.

1. Acetone.
2. Ammonium.

3. Amyl acetate.
4. Aqua regia.
5. Benzine.
6. Butyl alcohol.
7. Calcium hypochlorite.
8. Chloroform.
9. Chromic acid.
10. Ethyl acetate.
11. Ethyl alcohol.
12. Ethyl ether.
13. Formaldehyde.
14. Glacial acetic acid.
15. Hydrochloric acid.
16. Hydrogen peroxide.
17. Kerosene.
18. Methyl alcohol.
19. Methyl ethyl ketone.
20. Nitric acid.
21. Phenol.
22. Phosphoric acid.
23. Silver nitrate.
24. Sodium hydroxide.
25. Sulfuric acid.
26. Trichlorethylene.
27. Xylene.
28. Zinc chloride.

2.5 LABORATORY FITTINGS:

A. Water Service Fittings:
1. Water service faucets and valves shall have renewable unit containing all working parts subject to wear, including replaceable stainless steel seat. Unit shall have serrations for position locking into valve body.
2. Gooseneck vacuum breakers: Brass forgings integral with gooseneck, with renewable seat and special design valve member for fine flow control.
3. Goosenecks shall have separate 3/8" IPS coupling securely brazed to gooseneck to provide full thread for attachment of anti-splash outlet fittings, serrated tips and filter pumps.

B. Air, Gas and Vacuum Systems Fittings:
1. Needle valves: Small pattern needle valve, straightway type with stainless steel replaceable floating cone and brass seat (non-renewable). Ten serrated end is integral with valve body.

2. Ground key cocks: Straightway ground key cocks, individually ground and lapped and tested at 100 psi. air under water. Cocks shall have single arm long easy grip handle with screw-on type index. Ten serrated end is integral with valve body.

C. Turrets for gas, air, vacuum, or water fixtures: "Round" type design, provided with brass shanks, locknuts and washers.

D. Handles for service cocks, faucets and remote controls: Four-arm type except ground key cocks. Provide removable screw-on type colored plastic discs with letter stamped on disc in contrasting color as scheduled below:

Service	Disc/Letter Colors	Letters
Gas	Blue/White	Gas
Vacuum	Yellow/Black	Vac.
Compressed Air	Orange/White	C-Air
Cold Water	Green/White	C.W.
Hot Water	Red/White	H.W.
Distilled Water	White/Black	D.W.

[Disc color for special services as determined by Owner].

E. Electrical fixtures and fittings: Flush, pedestal or line type, provided in strict accord with the current edition of the National Electric Code of the National Fire Protection Association, and with requirements of all local regulatory authorities.

1. Pedestals: Provide with integral bases; low design for use on either single or double faces.
2. Line type housings: Similar in design to pedestals; designed to be self-supporting when installed with rigid conduit.
3. Receptacles: Rated 120 volts A.C. at 20 amps., three wire grounding type with "Automatic Ground" feature. Provide single or duplex receptacles as required, with white colored molded thermo-set bodies.
4. Switches: Single pole, toggle type.
5. Flush boxes: Galvanized steel.
6. Flush plates: Stainless steel.
7. Conduit: Rigid type, of size to accommodate easy pulling of wire. Boxes, component parts and fittings shall be the screw type. Provide enamel finish on exposed conduit and ferrous fittings.
8. Pedestal and line type housings, flush boxes, receptacles and flush plates shall be grounded.

F. Casework shall also include fittings for cold water, hot water, data and power.

G. Fixture finish: Chrome finish over properly prepared brass castings or forgings.

PART 3 - EXECUTION

3.1 EXAMINATION:

A. Site Verification of Conditions: Furniture shall not be delivered or installed until the following conditions have been met:
   1. Building shall be enclosed (windows and doors sealed and weather-tight);.
   2. An operational HVAC system that maintains temperature and humidity at occupancy levels shall be in place.
   3. Ceiling, overhead ductwork and lighting shall be installed.
   4. Site shall be free of further construction such as “wet work.”
   5. Required backing and reinforcements shall be installed accurately and the project shall be read for furniture installation.

3.2 FURNITURE INSTALLATION:

A. Furniture installation:
   1. Furniture shall be set with components plumb, straight and square, securely anchored to building structure with no distortion. Concealed shims shall be used as required.
   2. Cabinets in continuous runs shall be bolted together with joints flush, uniform and tight with adjacent units. Joints shall not exceed 1/16".
   3. Secure wall furniture to solid material, not lath, plastic or gypsum board.
   4. Top edge surfaces shall be abutted in one true place. Joints shall be flush and shall not exceed 1/8" between top units.
   5. Furniture and hardware shall be adjusted and aligned to allow for accurate connection of contact points and efficient operation of doors and drawers without warping or binding.

3.3 COUNTERTOP INSTALLATION:

A. Install countertops level and true to line in accord with approved shop drawings and product data. Provide lengths of minimum size indicated.

B. Perform field jointing as specified. Locate joints in accord with approved shop drawings. Maximum joint width shall be 1/16".

C. Join length and secure to casework as indicated in product data. Where required by manufacturer, provide clamping devices to align and secure tops during installation process.

D. Secure countertops to casework and equipment components with material and procedures recommended by manufacturer's product data. Where required by manufacturer, provide clamping devices to align and secure tops during installation process.

E. Unless otherwise indicated, provide back and end splashes at intersection of all counters with vertical wall surfaces. Splashes shall be same material as tops. Height as indicated on drawings.

F. Exposed fasteners are not permitted.

G. Provide cut-outs for plumbing, mechanical and electrical service fittings.

3.4 SINK INSTALLATION:

A. Install sinks in countertops in accord with approved shop drawings.
   1. Set sinks in chemical-resistant sealing compound, secured and supported in accord with manufacturer's product data.
   2. Final connection of sinks shall be performed under plumbing section.

3.5 FITTINGS AND ACCESSORY INSTALLATION:

A. Install in accord with manufacturer's product data.

B. Turn screws to seat flat; do not drive.

3.6 CLEANING:

A. Ensure products are unsoiled and match factory finish. Remove or repair damaged or defective units.

B. Clean finished surfaces, including drawers and cabinet shelves, and touch up as necessary.

C. Countertops shall be cleaned and free of grease or streaks.

3.4 PROTECTION:

A. Protect counter tops and ledges with 1/4" ribbed cardboard for remainder of construction process.

END OF SECTION

SECTION 12492

HORIZONTAL LOUVER BLINDS

PART 1 - GENERAL

1.1 SUBMITTALS:

A. Product data: Submit manufacturer's product data for blinds. Indicate materials, finishes, construction and installation instructions. Include manufacturer's recommended maintenance and cleaning instructions.

B. Samples:
1. Submit manufacturer's color sample chips for color selection by Architect.
2. Submit full size sample indicating top and bottom hardware, tracks, cord and ladders and minimum 1'-0" length of slat.

C. Shop drawings: Indicate fasteners, installation methods and clearances at head, jamb and sill.

1.2 DELIVERY, STORAGE AND HANDLING:

A. Deliver to project site in manufacturer's original packaging.

B. Handle and store to prevent damage to finished surfaces and operating mechanisms.

1.3 WARRANTY:

A. Provide blind manufacturer's standard material warranty for slats, tilters, hardware, finish and construction. Warranty period shall be lifetime of original installation, beginning at Date of Substantial Completion.

PART 2 - PRODUCTS

2.1 BLINDS:

A. Acceptable products; subject to compliance with specified requirements:
1. CACO, Inc., Malibu 6.
2. Hunter Douglas, Inc., Model CE61.
3. Levelor Lorentzen, Inc., Monaco.
4. Springs Window Fashions Division, CustoMizer.

B. Characteristics: Provide each blind as a complete unit produced by one manufacturer, including hardware, accessory items, mounting brackets and fasteners:
1. Headrail: Maximum 1-inch by 1-inch steel.

2. Slats: Nominal 1-inch wide, 0.006-inch thickness micro-perforated aluminum; 22.5 millimeter spacing between slats.
3. Construction: Aluminum and steel components with synthetic fiber ladders and lift cords.
4. Tilt operation: Wand tilter; wand at 4-feet above finished floor.
5. Finish: Provide metal components with anti-static and anti-microbial factory finish. Color shall be as selected by Architect from manufacturer's premium color range.
6. Hardware: Brackets, supports and internal reinforcement for installation and operation.
7. Ventilation: Provide ventilation through blinds by pre-setting tilt mechanism with cam stop to prevent blinds from closing more than 60-degrees above or below horizontal.

2.2 FABRICATION:

A. Verify actual opening dimensions by job site measurements.

B. Fabricate units for openings indicated, from head to sill and jamb to jamb. For continuous installations, fabricate blinds so that ends occur over mullions.

C. Fabricate blinds with tilt operation controls on left-hand side of units. Provide full height raising operation with locking only in fully raised position.

D. Locate pull cords for raising and lowering on right-hand side of units. Where pull cords or wand tilters are located behind columns and at building corners, install pull cords and wands on same side of blind unit for ease of access.

PART 3 - EXECUTION

3.1 INSTALLATION:

A. Install blinds in exterior windows, plumb and in accord with manufacturer's product data and approved shop drawings. Provide intermediate support for blinds greater than 5'-0" in length.

B. Adjust operating mechanisms for proper operation. Clean exposed surfaces prior to Date of Substantial Completion. Repair or replace damaged blinds or units which have been stained.

END OF SECTION

SECTION 13120

ALUMINUM FLAT COVERS

PART 1--GENERAL

1.01 DESCRIPTION

This section specifies the design, fabrication and erection of substantially airtight, flat covers as indicated on the contract drawings. Cover panels shall have flat tops and be of extruded aluminum; covers fabricated of bent aluminum plate are not acceptable. All necessary supporting beams and trusses shall be of aluminum construction. Cover system shall include all flashing and trim, fasteners, anchors, gaskets and sealant as required for a complete cover installation

The cover shall possess an integral non-skid surface and no exposed area of cover system wider than one inch shall be without rib/non-skid surface.

Interlocking panels shall be substantially weathertight and airtight incorporating a compatible neoprene gasket. The cover shall maintain an air intrusion leakage rate not to exceed 0.2 cfm per square foot at an applied negative pressure of 0.2 inch of water column for a 5-minute duration.

The maximum weight of any component shall not exceed 150 pounds.

Access shall be as indicated on the Drawings. Access hatch panels shall have identical properties as the rest of the aluminum cover including loads, deflection and slip resistance. Hinged panel components including hinges, decking, and lifting handles shall be extruded aluminum. While in the closed position, the panel shall lie flat on the cover and will not need a hold open device. Handles shall be an integral flush mounted aluminum and incorporated into the non-skid deck slat.

Flat covers shall accommodate features such as electrical conduits, electrical pullboxes, light poles, and flow measuring devices without leaving more than 1/2-inch clearance around the accommodated feature.

Access hatches shall be provided as shown on the drawings and at the following locations:

1. Adjacent to the vertical mixers. Size shall be coordinated with the mixer manufacture to remove the under cover components.
2. At the location of all under cover valves.
3. At the location of all under cover instruments.

In addition to the cover requirements noted above, there shall be 20 additional access hatchesd with nominal 2 ft. by 2 ft. dimensions provided. Hatch locations shall be selected by the Owner.

1.02 QUALITY ASSURANCE

A. REFERENCES:

This section contains references to the following documents. They are a part of this section as specified and modified. In case of conflict between the requirements of this section and those of the listed documents, the requirements of this section shall prevail.

Reference

ASTM C-864 Standard Specifications for Preformed Gasket and Sealing Material

ASTM F-593 Standard Specifications for Stainless Steel Bolts, Hex Cap Screws and Studs

ASTM B-308 Standard Specification for Aluminum Alloy 6061-T6 Standard Structural Profiles

Aluminum Association Specifications for Aluminum Structures

Aluminum Association Aluminum Standards and Data

1.03 DESIGN STANDARDS

Design shall be in accordance with the Standard Building Code. Aluminum flat covers shall be designed in accordance with the "Specifications for Aluminum Structures" as published by the Aluminum Association. Cover shall be designed for loads below or those of the prevailing building code, more stringent controlling. ASCE 7 Occupancy Category is III.

A. LIVE LOADS:

Basic Live Load equal to 20 psf although all components shall be designed to support a 400 pound load on a 12 inch square area located anywhere on the surface of the structure without permanently deforming the loaded area.

B. WIND LOADS:

The wind load shall be the load resulting from a minimum wind velocity of 90 mph. Exposure is C.

C. DEAD LOADS:

The dead load shall be as determined, although it shall not exceed 10 psf.

D. MIXER LOADS

The cover support structure shall be designed to support the vertical mixers installed at the biological basins and post anoxic basins. Cover manufacture shall coordinate with the mixer manufacturer for the required support loads and attachment requirements.

E. SURFACE REQUIREMENTS

The aluminum covers shall be installed on the tanks such that the cover surface shall be flush with the top of the adjacent tank walls and operating platforms. All cover support structures shall be connected to the internal tank side walls. No structural or any other components shall rest on top of the tank walls except for an extension of the cover surface.

1.04 SUBMITTALS

The following submittals shall be provided:

1. Before executing any of the work in this section, the flat cover manufacturer shall submit calculations and drawings to the Engineer showing dimensions, sizes, thicknesses, gauges, materials, finishes, joint attachments and erection procedure, including erection bracing, and sequence of work. These calculations and drawings shall be sealed by a registered Professional Engineer registered and licensed in the state of the state of the Project.

2. The flat cover shall be fabricated and erected in accordance with the approved drawings.

3. A copy of this specification section, with addendum updates included, and all referenced and applicable sections, with addendum updates included, with each paragraph check-marked to indicate specification compliance or marked to indicate requested deviations from specification requirements. Check marks (✓) shall denote full compliance with a paragraph as a whole. If deviations from the specifications are indicated, and therefore requested by the Contractor, each deviation shall be underlined and denoted by a number in the margin to the right of the identified paragraph, referenced to a detailed written explanation of the reasons for requesting the deviation. The Engineer shall be the final authority for determining acceptability of requested deviations. The remaining portions of the paragraph not underlined will signify compliance on the part of the Contractor with the specifications. Failure to include a copy of the marked-up specification sections, along with justification(s) for any requested deviations to the specification requirements, with the submittal shall be sufficient cause for rejection of the entire submittal with no further consideration.

1.05 MANUFACTURERS

Aluminum flat cover shall be as manufactured by CST Covers, Conroe, Texas, Hallsten Corporation, Sacramento, California or equal.

1.06 WARRANTY

A manufacturer's warranty shall be furnished for the COVER system. The warranty shall provide, but not be limited to the following:

1. The warranty shall be issued directly to the Owner.

2. The warranty period shall be not less than 10 years from the date of acceptance of the work.

3. The warranty shall cover the overall performance of the flat cover and the certification that all materials have been installed in accordance with the both the Contract Documents' drawings and specifications and the manufacturer's drawings and installations directions.

PART 2--PRODUCTS

2.01 MATERIALS

1. Flat cover panels extruded 6061-T6 aluminum conforming to ASTM B-308.

2. Closure flashing: 0.090" (minimum) nominal thickness, 5052-H36, 5052-H32 or 5086-H34 aluminum sheet or extruded 6061-T6 aluminum.

3. Structural shapes: 6061-T6 aluminum.

4. Fasteners: ASTM F-593, Group 1.

5. Sealant: Silicone conforming to Federal Specification TT-S-00230.

6. Gaskets: Silicone Neoprene conforming to ASTM C-864.

7. Concrete Anchors: Expansion anchors of 316 stainless steel.

PART 3--EXECUTION

3.01 ERECTION

1. The contractor shall perform the work described herein with mechanics skilled and experienced in the fabrication and erection of flat cover

structures. All field work shall be directed by a qualified supervisor who will remain on the job site until the cover construction is completed.

2. Field re-fabrication or welding of structural components or panels will not be accepted. Forcing the structure to achieve fit-up during construction is expressly forbidden and not acceptable.

3.02 AIR TIGHTNESS TEST

1. Upon completion of the installation, the contractor shall perform an air tightness test to verify conformance with the specifications.

END OF SECTION

SECTION 13230

FIBERGLASS REINFORCED PLASTIC (FRP) FABRICATIONS

PART 1--GENERAL

1.01 DESCRIPTION

This section specifies general requirements for fiberglass reinforced plastic (FRP) fabrications. Equipment-specific requirements are detailed in other sections of the contract documents pertaining to specific equipment. This section is intended to be used in conjunction with the other related equipment specification sections and design drawings. It is intended to specify materials, describe methods of work, and provide for documentation of quality and acceptance.

1.02 QUALITY ASSURANCE

Quality, as represented by raw materials used, manufacturing practices employed, and condition of the finished product, is of prime importance. Knowledge of new technology in the interest of improved quality and/or lower cost is welcomed. However, any change of raw materials, alteration of construction, or other deviations from the requirements of the Specification sections or design drawings must be submitted in detail and approved in writing by the Engineer.

1.03 REFERENCES

This section contains references to the following documents. They are a part of this section as specified and modified. In case of conflict between the requirements of this section and those of the listed documents, the requirements of this section shall prevail.

Unless otherwise specified, references to the documents in this section shall mean the documents in effect at the time of Advertisement for Bids or Invitation to Bid. If referenced documents have been discontinued by the issuing organization, references to those documents shall mean the replacement documents issued or otherwise identified by that organization or, if there are no replacement documents, the last version of the document before it was discontinued. Where document dates are given in the following listing, references to those documents shall mean the specific document version associated with that date, whether or not the document has been superseded by a version with a later date, discontinued or replaced.

Reference	Title
AISC and Research Council for Riveted and Bolted Structural Joints (RCRBSJ)	Specification for Structural Joints Using ASTM A325 or A490 Bolts
American Institute of Steel Construction (AISC)	Specification for the Design, Fabrication, and Erection of Structural Steel for Buildings
AMCA 500 D	Laboratory Methods of Testing Dampers for Rating

Reference	Title
API 12P, American Petroleum Institute (API)	Specification for Fiber Reinforced Plastic Tanks
ASME/ANSI RTP-1	Reinforced Thermoset Plastic Corrosion Resistant Equipment
ASTM C582	Standard Specification for Contact Molded Reinforced Thermosetting Plastic (RTP) Laminates for Corrosion-Resistant Equipment
ASTM D883	Definitions of Terms Relating to Plastics
ASTM D2471	Gel Time and Peak Exothermic Temperature of Reacting Thermoset Resins
ASTM D2563	Recommended Practice for Classifying Visual Defects in Glass-Reinforced Plastic Laminate Parts
ASTM D2583	Test for Indentation Hardness of Rigid Plastics by Means of a Barcol Impressor
ASTM D2584	Ignition Loss of Cured Reinforced Resins
ASTM D3299	Filament-Wound Glass Fiber Reinforced Polyester Chemical-Resistant Tanks
ASTM D3567	Determining Dimensions of Reinforced Thermosetting Resin Pipe and Fittings
ASTM D3982	Standard Specification for Contact Molded “Fiberglass” (Glass Fiber Reinforced Thermosetting Resin) Duct and Hood
ASTM D4097	Contact-Molded Glass Fiber Reinforced Thermoset Resin Chemical-Resistant Tanks
ASTM E84	Standard Method of Test for Surface Burning Characteristics of Building Materials
AWS D1.1, American Welding Society (AWS)	Structural Welding Code
National Bureau of Standards Voluntary Product Standard PS 15-69	Custom Contact-Molded Reinforced-Polyester Chemical Resistant Process Equipment
Iron and Steel Society	Pocketbook of Standard Steels
IBC	International Building Code
IMC	International Mechanical Code

1.04 DEFINITIONS

The terminology of this specification is consistent with ASTM D883. Fabricators are responsible for correct interpretation. Further definitions are as follows.

1. EQUIPMENT: The FRP equipment, as listed in the pertinent equipment section, including all ancillary equipment, work, and materials as described in this section and related sections specification.

2. FABRICATOR: The primary party responsible for fabrication of the FRP equipment.

3. FIELD JOINING CONTRACTOR: The party responsible for the field joining of the equipment. This may be the same party as the Fabricator and/or the Contractor.

4. MAT: A fibrous material consisting of randomly oriented chopped or swirled glass filaments loosely held together with a binder.

5. CHOPPED GLASS: A fibrous material consisting of randomly oriented chopped filaments applied directly to a mold surface or laminate under construction by a chopper gun.

6. FIBER PROMINENCE (JACKSTRAW): The distinct visibility of individual glass strands causing a loss of translucency of the laminate.

1.05 SUBMITTALS

Submittals shall be provided in accordance with Specification Section 01300. Submittal requirements for FRP fabrications are detailed in those specification sections pertaining to specific equipment.

PART 2--PRODUCTS

2.01 GENERAL

All products shall be new, of current design, and produced by approved manufacturers who specialized in the fabrication of such products.

Stainless steel hardware and fabricated parts (including anchor bolts, anchor lugs, lifting lugs, hangers, etc.) shall be AISI Type 316.

Gaskets for use with FRP flanges shall be flat, full-faced, and drilled to match the drilling of the mating flange(s). Gasket material shall be as specified in the pertinent equipment section.

2.02 MATERIALS

A. RESIN:

1. The equipment shall be fabricated using the corrosion-resistant resin(s) specified in the pertinent equipment section, or equal as approved by the Engineer. The resin shall be used throughout all laminates.

2. Catalysts and promoters shall be of the type and amount recommended by the resin manufacturer for use with their resin in the required service. The Engineer will review the Fabricator's choice of resin/catalyst before fabrication begins to verify compliance to the resin manufacturer's recommended procedures. Positive measurement control of catalysts, promoters, and resins shall be maintained at all times.

3. No fillers, additives, or pigments shall be employed in the resin except as specified below, and in the pertinent equipment section. A thixotropic agent for viscosity control may be used in the proportion and type recommended by the resin manufacturer as approved by the Engineer. No thixotropic agent is to be used in the corrosion liner or on surfaces to be in contact with the corrosive environment.

4. Resin putty shall be made using the same resin as was used in the original fabrication of the parts to be joined. Resin putty shall contain a minimum 15 percent by weight of milled glass fibers. A fumed-silica additive such as Aerosil 200 or Cab-O-Sil TS-720 shall be added to increase the viscosity of the putty. The use of silica flour, grinding dust, or other fillers is not allowed.

5. When specified in the pertinent equipment section, antimony trioxide or antimony pentoxide shall be added to the resin in the amount necessary to achieve the required fire retardancy rating in the structural wall only. Resin manufacturer's recommendations shall be followed. The corrosion liner shall not contain this additive.

B. REINFORCEMENT:

1. Type and sequence of reinforcement to be used shall be as designated in the pertinent equipment section, the construction details, or on the design drawings.

2. Glass fiber reinforcement used shall be a commercial grade corrosion-resistant borosilicate glass, except as otherwise noted.

3. All glass fiber reinforcing shall have an epoxy compatible silane type surface finish and binder that is specifically recommended by the glass manufacturer for the particular resin system to be used. This surface finish should allow the maximum possible chemical bonding between the resin and glass.

4. Surfacing veils shall be Type C (chemical grade) glass, 10 mil thickness, unless otherwise specified. An apertured polyester surfacing veil, such as Nexus or approved equal, shall be used only when indicated in the pertinent equipment section. The Engineer is not aware of an equal product.

5. Mat shall be Type E (electrical grade) glass, 1-1/2 oz. or 3/4 oz. per sq. ft., as specified in the pertinent equipment section, with nominal fiber length of 1.25 ±0.75 inches.

6. Continuous glass roving used in chopper guns for spray-up shall be Type E chopper roving.

7. Woven roving shall be 24 oz. per sq. yd. Type E glass and have a 5 x 4 plain weave.

8. Continuous roving used in filament wound construction shall be Type E glass winder roving with a yield of 200 yards or more per pound.

9. Unidirectional reinforcement shall be weft unidirectional fabric, Type E glass, 15.7 oz./sq. yd., such as Hexcel Knytex, Brunswick Technologies, Inc., W-16, or equal.

2.03 FABRICATION

A. MOLDS:

1. Molds constructed of Masonite, wood, or other porous material must be completely covered with mylar or other suitable material to produce a smooth and glossy inner surface on the FRP equipment.

2. Molds and mandrels shall be hard-surfaced such that working the wet laminate will not cause local displacement of the material or air entrapment. Covering of mandrels with cardboard is not acceptable. If submitted, Contractor shall demonstrate that it produces an RTP-1 Level 2 liner quality before being approved by the Engineer prior to start of fabrication.

3. Certain construction details shown on the design drawings assume the availability of specific tooling and/or molds. Alternate mold configurations may be considered by the Engineer in the interest of cost savings or betterment. Any deviations from the dimensions shown on the design drawings must be approved by the Engineer prior to the start of fabrication.

B. VESSEL ASSEMBLY:

1. All cutouts from the equipment are to be marked, indicating their original location, and retained. All cutouts become the property of the Engineer.

2. Centerlines marked on the equipment for use in assembly shall not be removed until after inspection by the Engineer.

3. Flanged nozzles shall be installed with bolt holes straddling principle centerlines of the vessel. For tank tops, nozzle bolt holes straddle radial centerlines. Other layouts take precedence when detailed on the design drawings.

4. When requested, Fabricator shall supply to the Contractor, at the earliest possible time, a template which locates anchor bolt holes within ±1/8 inch for each vessel.

5. When specified, or indicated on the design drawings or construction details of the pertinent equipment section, a non-skid surface shall be provided on the exterior surface of domed covers. Silica grit may be applied in conjunction with the final resin coat, or other methods employed if approved by the Engineer.

6. The Fabricator shall furnish and overlay on the outside of the equipment a plastic nameplate showing the following information:

   a. Name of manufacturer
   b. Date of manufacture
   c. Engineer's purchase order number
   d. Equipment name/number
   e. Resin number and manufacturer
   f. Design pressure and temperature
   g. Vessel diameter, height, and weight

7. Butt joints or shell joints are to be in the number and location(s) as shown on the design drawings. Additional joints are not allowed except as approved by the Engineer. Slip joints, "mod joints," or other methods not conforming to the design drawings are not allowed. If joint locations are not indicated on the design drawings, Fabricator shall propose number and location for approval by Engineer.

8. Allowable tolerances shall be as listed in RTP-1, Fig. 4-1 and NM 7-1, except as modified herein or on the design drawings.

9. When joining components, gaps at mating edges shall be limited to 1/4 inch maximum, and misalignment of inside surfaces shall not exceed 1/3 of the lesser wall thickness.

10. The outside surface of vessel flat bottoms after assembly shall be flat within ±1/2 inch. In addition, localized indentations or protrusions shall not exceed ±1/4 inch within 2 feet.

11. Nozzle cutout reinforcement shall be applied as specified on the design drawings.

12. When reinforcing materials are cut to facilitate placement around an installed nozzle or opening, joints in successive reinforcing layers shall be staggered to avoid overlapping and shall not be placed so that the joints are parallel to the axis of the tank. The principal fiber direction of the woven roving reinforcement shall be parallel to the tank axis.

C. DUCTWORK ASSEMBLY:

1. Centerlines marked on the equipment for use in assembly shall not be removed until after inspection by the Engineer's representative.

2. Fabricator shall apply and overlay an identification tag on each duct spool, straight duct length or other equipment, showing the following information:

   a. Name of manufacturer
   b. Date of manufacture
   c. Contractor’s purchase order number
   d. Resin identification
   e. Duct diameter
   f. Laminate thickness
   g. Unique spool identification number

3. Tolerances on spool assembly shall be as follows, except as otherwise noted on the drawings:

   a. Diametric, including out of roundness, shall be ±1/8 inch or ±1 percent, whichever is greater.
   b. Tolerance on overall length and location of tees and laterals shall be ±1/4 inch.
   c. Plain ends shall be cut square with the duct axis ±1/8 inch.
   d. Flanges shall be perpendicular to the axis of the duct within 1/2 degree, and shall be flat to ±1/32 inch up to and including 16 inch diameter and ±1/16 inch for larger diameters.
   e. Tolerance on the specified angle for tees, laterals, and miters shall be ±1/2 degree.

4. All cutouts from the equipment are to be marked, indicating their original location, and retained. All cutouts become the property of the Engineer.

5. Cut Lengths: Engineer prefers straight duct to be supplied to required lengths with a minimum of shop butt joining of shorter lengths. Recognizing that waste can be minimized by joining shorter sections, or that mandrels may be limited to 20 ft., shop butt joints will be allowed within reason.

6. Duct Marking: All lengths of duct shall be identified in accordance with the requirements of paragraph 13230-2.03 C2 above. If required by the

Engineer, Fabricator shall return a marked-up copy of the layout drawings, with Mark numbers referenced.

D. ALL LAMINATES:

1. Refer to the pertinent equipment section for reinforcement sequences. No deviations in number or sequence of plies will be allowed without approval by the Engineer.

2. Positive methods shall be used to assure uniform total thickness of the laminate and uniform glass-to-resin ratio without surplus resin or unsaturated glass.

3. All laminate thicknesses shown on the design drawings are construction minimums. It is the responsibility of the Fabricator to verify that minimum thicknesses are obtained using the laminate sequences specified.

4. The minimum allowable structural laminate thickness shall be the total laminate thickness less the specified sacrificial corrosion liner thickness.

5. Interruptions in laminating sequence should only occur after exotherm plies (E or e), as described in the pertinent equipment section. If an exotherm interruption becomes otherwise necessary, it shall follow the application of a ply of mat and be succeeded by a ply of mat. This may require an additional ply beyond that specified.

6. Laminating sequence interruptions shall not exceed 24 hours, and the in-process surface must retain acetone sensitivity until laminating is resumed. Lack of compliance with these procedures, or any indication that contamination of the surface has occurred, shall require that surface preparation be accomplished before resuming. Before resuming lamination, any rough areas or projections shall be touch-ground to allow full contact of the succeeding wet laminate.

7. An exotherm interruption is specifically prohibited within the corrosion liner. An exotherm interruption between the corrosion liner and the structural layers is limited to a maximum of twelve hours.

8. Chopped strand glass applied by chopper gun is allowed in lieu of mat layers in the structural laminates only. Application must be mechanically controlled in order to assure uniform thickness and glass-to-resin ratio. The specific methodology must be approved by the Engineer prior to fabrication. Chopper gun application of the corrosion liner is not allowed.

9. All non-mold surfaces shall be coated with resin containing wax additive in the amount necessary to allow full cure of the surface. In the case of interior primary corrosion surfaces, such as interior overlays, this wax coat shall be applied within 24 hours of original lamination. In the case of

exterior surfaces, this wax coat shall also contain a UV stabilizer in the type and amount recommended by the resin manufacturer.

10. The exterior surface of all equipment shall be resin rich and reinforced with one layer c-glass surfacing veil, except as otherwise specified.

11. When specified in the pertinent equipment section, the exterior coat shall be an opaque pigmented surface coat, applied only after Engineer's inspection. Color to be selected by the Engineer.

12. Saturation of reinforcement prior to application to equipment shall not be performed on waxed paper or other contaminated material. Saturation of reinforcement on clean paper or cardboard is allowed.

13. All cut edges shall be thoroughly coated with resin so that no glass fibers are exposed. Cut edges exposed to the corrosive service shall be sealed with a corrosion liner laminate. All voids shall be filled with resin putty.

E. CORROSION LINER LAMINATES (inner surface and interior layers):

1. The inner (corrosion service) surface of all laminates shall be resin-rich and reinforced with surfacing veil of the type and number of layers as described in the pertinent equipment section.

2. The interior layer of the corrosion liner shall consist of 1-1/2 oz. per sq. ft. mat in the number of layers specified in the pertinent equipment section. Each ply shall be rolled separately to remove entrapped air.

3. Chopped glass applied by chopper gun is not allowed in the corrosion liner.

4. All plies of the inner surface and interior layer are to gel completely before proceeding with the structural laminates, but in no case shall the interruption exceed twelve hours. The surface must retain acetone sensitivity until the structural laminate is applied. Lack of compliance to either of these aspects shall be cause for rejection of the corrosion liner.

5. Completed corrosion liner, as described above, shall contain not less than 20 percent or more than 30 percent glass (by weight). No thixotropic material shall be used in the liner resin or in the fabrication of any FRP components intended for direct contact with the process stream. Completed liner shall be the minimum thickness specified in the pertinent equipment section. Completed liner shall meet visual defects requirements of RTP-1, Table 6-1, Level 2.

6. All edges of surfacing veils in wet lay-up shall be lapped a minimum of one inch.

7. A separately cured unreinforced gel coat shall not be used.

8. Antimony shall not be used in the corrosion liner.

F. HAND-LAYUP STRUCTURAL LAMINATES:

1. The corrosion liner laminate shall be followed by structural laminates of varying construction types, as specified in the pertinent equipment sections, or on the design drawings.

2. For hand-layup structural laminates, reinforcement shall consist of mat and woven roving in the sequence specified in the pertinent equipment section.

3. All woven roving shall have a ply of mat on each side. Two adjacent plies of woven roving are not permitted.

4. All edges of woven roving material in wet lay-up shall be lapped a minimum of two inches. Lapped edges of adjacent layers shall be staggered to obtain the maximum possible strength.

5. Laminates containing primarily 1-1/2 oz. per sq. ft. mat layers in conjunction with woven roving shall contain not less than 35 percent or more than 45 percent glass (by weight).

6. Laminates containing primarily 3/4 oz. per sq. ft. mat layers in conjunction with woven roving are considered to be high strength laminates and shall contain not less than 45 percent or more than 55 percent glass (by weight).

G. FILAMENT WOUND STRUCTURAL LAMINATES:

1. The corrosion liner laminate shall be followed by structural laminates of varying construction types, as specified in the pertinent equipment section, or on the design drawings.

2. For filament wound structural laminates, reinforcement shall consist of continuous strand fiberglass roving applied with a minimum of interruptions until the specified minimum thickness is attained. This laminate shall contain the percentage of glass (by weight) specified in the pertinent equipment sections.

3. Each complete cycle of filament winding shall form a closed pattern of winding bands which completely covers the surface with two bi-directional layers. Each layer shall be a maximum of one roving in thickness. Singular cycles shall not exceed a thickness of 0.06 inch, unless otherwise specified in the pertinent equipment sections. In laminates with helix angles greater than 75 degrees, a minimum 10% of the structural wall thickness shall be oriented at 0 degrees (longitudinal direction), plus or minus 5 degrees.

4. Upon request, Fabricator shall submit the following information:

   a. Specific glass strand to be used and yield
   b. Net thickness per cycle
   c. Number of strands per inch in the winding band
   d. Typical glass-to-resin ratio

5. Engineer retains the right to modify the laminate based on fabricator's specific filament winding system.

6. Spacing of filaments within the winding band shall be sufficiently close that bridging is avoided and glass content is maintained within the specified limits. Spacing of the filaments shall be uniform across the winding band without bunching or gapping.

7. The helix angle of winding shall be as specified in the pertinent equipment sections, as measured from the centerline of revolution of the equipment shell.

8. Tolerance on helix angle is +2 degrees, -2 degrees, unless otherwise noted in the pertinent equipment sections.

9. If layers of mat or chopped glass are needed to ensure proper bonding between the corrosion liner and filament winding, or within the filament winding to accommodate the fabricator's manufacturing methods, or to provide for laminates of acceptable quality, they may be added at the Fabricator's option. These layers are considered to be extra material and will result in a thickness greater than specified. The amount of filament winding and unidirectional roving specified must still be applied.

10. If for any reason, winding is interrupted to the point where the outer surface is gelled or exotherm temperatures are excessive, production shall stop and the laminate shall be allowed to cure. Any prominent ridges left on the cured surface shall be ground to smooth the projections and prevent bridging. Following the grinding, a bedding layer of 3/4 oz. per sq. ft. mat or chopped glass shall be applied and thoroughly rolled to remove air. Winding with continuous strand may be resumed before this layer gels. The additional mat layer is extra material and will result in a wall thickness greater than that specified.

H. SURFACE PREPARATION:

1. Surface Abrasion:

   a. Prior to starting secondary overlays, adequate surface abrasion with no surface contamination is required. Every precaution shall be taken to assure adequate surface preparation and a good bond of the secondary overlays.

b. Prior to making all overlays, the cured or wax coated surfaces of the area to be overlayed must be roughened thoroughly by grinding. The roughened area shall extend 1 inch minimum beyond the proposed overlay edge. The roughened area must be completely coated with wax coat at the completion of the joint.

c. Grinding shall be sufficiently deep that all traces of glossy resin coat are removed and that glass fiber is exposed over the entire abraded surface.

d. The edges of the abraded surface shall be "feathered" out such that no sharp discontinuities exist.

e. For surface abrasion by grinding, grinding disks shall be new and not contaminated, with a grit size of 16 to 24.

f. FRP joint application must begin within four hours of surface abrasion, or else abrasion must be repeated.

2. Final Surface Preparation:

a. Within 15 minutes prior to beginning FRP joint application, dust shall be removed from the abraded area by vacuuming or brushing with clean non-metallic brushes, or wiping with clean dry rags.

b. Solvent wiping the abraded area is not allowed.

c. Air blowing the abraded area is not allowed.

d. If any indication of contamination is present after this final surface preparation, the abraded area shall be scrubbed with solvent and allowed to evaporate to verify removal of the contaminant. Repeat this solvent wash if necessary. Surface abrasion must be repeated after solvent washing.

I. JOINING LAMINATES:

1. FRP joining laminates are subject to all applicable requirements specified in other Sections for laminates.

2. FRP joints shall be reinforced with an overlay of glass reinforcement and resin which extends equally within ±1/2 inch on each side of the joint. A smooth contour is required. Minimum thickness, ply sequence, and ply widths of FRP joints shall be as specified in the pertinent equipment Sections.

3. Tolerance on width of joint reinforcement plies is +1 inch, -0 inch. Woven roving plies shall not exceed the width of the mat ply below them.

4. Parts to be joined shall be restrained to prevent movement until completion and cure of the joint overlay.

5. Parts shall be fit up, and it shall be verified that all tolerances and assembly requirements of Sections are satisfied. The void between component parts shall be completely filled with resin putty, taking care not to extrude an excessive amount of putty into the interior.

6. The puttied area shall be ground to a smooth contour and final surface preparation repeated.

7. The abraded area to be overlaid shall be resin coated immediately prior to applying glass reinforcement, using a stiff brush to work resin into the rough surface. The resin coat shall be applied only to an area as wide (+1 inch, -0 inch) as the next exotherm stage of the joint sequence and shall be repeated prior to each exotherm stage. No thixotropic material shall be used in this resin.

J. ENVIRONMENT:

1. It is the Fabricator's responsibility to maintain conditions in the FRP laminate work area during all times when the final surface preparation and FRP laminate application are in process in order to not jeopardize the reliability of the laminate or secondary bond. As a minimum, controls shall include the following.

2. All surfaces to be overlaid and all materials are to be maintained within a range of 60 to 95 degrees F. This temperature must also be at least 5 degrees F greater than the dew point, as measured with a sling psychrometer. During the exotherm stage(s) of each laminate sequence, and during any unplanned exotherms, the temperature of the curing laminate will likely exceed 95 degrees F. No further lamination may proceed until the exotherm has completed and the laminate has cooled to 95 degrees F or less. No attempt shall be made to cool the curing laminate prematurely.

3. Prepared surfaces and materials shall be protected from blowing dust, moisture, and other contaminants.

4. If any of the above conditions are violated while the final surface preparation or FRP laminate application are in-process, work shall stop immediately and the process must begin again with surface abrasion.

5. Materials shall be stored in a dry area and within the temperature and humidity limits recommended by the manufacturers.

K. FLANGES:

1. Except as otherwise specified on the design drawings, flanges shall be made by hand-layup construction with nozzle neck and flange made integrally in one piece and fabricated in accordance with the dimensions shown on the design drawings. All layers of reinforcement in the nozzle neck and hub shall extend uninterrupted into the flange.

2. Unless otherwise noted on the design drawings, additional hub thickness shall be built-up using alternating layers of 1-1/2 oz. per sq. ft. mat and 24 oz. per sq. yd. woven roving.

3. Additional thickness in the flange shall be built-up using "ring" cutouts of mat, evenly distributed throughout the flange thickness.

4. Press molded or filament wound flanges are not allowed.

5. To obtain proper seating, bolt holes shall be spotfaced for SAE size washers. Overall machine facing of the back of flanges is not permitted. Bolt holes and all other cut surfaces shall be resin coated. Spotfacing shall not produce a flange thickness less than that specified in the pertinent equipment Section.

6. Bolt holes in flanges are to straddle principal centerlines of the equipment. Tolerance in bolt hole locations and in diameter of bolt circle shall be ±1/16 inch.

7. Flange faces shall be flat to ±1/32 inch up to and including 16-inch diameter and ±1/16 inch for larger diameters.

8. Resin coat all flange bolt holes so that no fibers are exposed.

2.04 FABRICATION QUALITY CONTROL

A. ALLOWABLE VISUAL DEFECTS:

1. Fabricator shall take care to minimize the amount of defects in all laminates. In no case shall visual defects in any area of the equipment exceed the maximum allowable levels of visual defects set forth in RTP-1, Table 6-1, Level 2.

2. Visual defects shall be as defined in ASTM D2563 and ASME/ANSI RTP-1, Table 6-1.

3. Presence of visual defects in excess of the allowable levels shall be grounds for rejection of the equipment.

B. FRP FABRICATION:

1. Fabricator shall be responsible for implementation of a comprehensive quality assurance procedure. The minimum requirements are described below.

2. Fabricator shall designate personnel to inspect equipment while in-process and after completion to assure compliance to all aspects of the specification and design drawings. Inspection shall include, as a minimum, checks for visual defects, laminate thickness and sequence, glass content, Barcol hardness, dimensional tolerances, adherence to construction details, surface preparation, and environmental conditions. Fabricator's inspector shall complete a report of the findings including method of measurement for each separate assembly.

3. Prior to use of any resin, Fabricator shall test resin to establish cure characteristics and verify that it meets the resin manufacturer's acceptance standards.

4. Resin testing shall be performed in accordance with ASTM D2471. Gel time to peak exotherm and peak exotherm temperature shall be recorded.

5. If the Fabricator in any way alters the resin after receipt, such as through the addition of styrene, promoters, or other additives, one test shall be performed for each drum or portion thereof mixed with additives.

6. Fabricator shall provide documentation for each test, including resin type, manufacturer, batch and lot number, drum number, complete listing of all additives with amounts added, and description and manufacturer of each additive.

7. Fabricator shall inspect all glass reinforcement prior to use in fabrication and shall not use any glass that does not meet the manufacturer's acceptance standards. Glass material that is wet or has been wet shall not be used. For each type of glass and lot number used, Fabricator shall record the manufacturer, product description, binder type, product code, production date, and lot number. For mat, woven roving, unidirectional roving, and cloth, records shall also include actual measured weight per square yard of material.

8. Fabricator shall retain all nozzle cutouts and other excess laminate, clearly marking each piece to identify its original location. These laminate samples become the property of the Engineer. For areas where valid laminate samples are not available, sample plugs shall be taken at the Engineer's request. Repair of subsequent holes will be performed in a manner approved by the Engineer.

9. Fabricator shall verify glass content of corrosion liner and structural laminate on available samples in accordance with ASTM D2584. This

test shall be completed, and the results reported for each major component where samples are available.

10. Prior to final shipment of the equipment, Fabricator shall provide the Engineer with a complete quality control report, consisting of copies of all records maintained for compliance with this Section.

C. ENGINEER'S INSPECTION:

1. The Engineer shall be permitted access to the equipment during fabrication and upon completion for the purpose of verifying compliance to the contract documents. The Engineer's inspection is not intended to replace the Fabricator's own quality control procedures.

2. In no respect does inspection of any equipment by the Engineer relieve the Fabricator of compliance with the contract documents. A final inspection shall be performed by the Engineer when the Fabricator certifies that all the terms and requirements of the contract documents have been satisfied. At least five days notice shall be given the Engineer prior to this inspection.

3. The Fabricator is required to notify the Engineer at the completion of particular milestones during fabrication. The Fabricator shall give at least 48 hours notice prior to occurrence of these milestones, as follows:

   a. View tooling prior to fabrication
   b. Beginning application of corrosion liner for each part
   c. Extraction of each part prior to beginning assembly
   d. Upon completion of each separate assembly

4. Engineer reserves the right to include additional milestones.

5. In the event the equipment is not to the stage of completion designated for a milestone inspection or is not complete as required for a final inspection at the time specified by the Fabricator, the Fabricator agrees to assume the cost of the inspector's time and expenses and further agrees that such charges be deducted from the cost of the equipment.

6. Engineer shall be allowed to photograph the equipment while in-process and/or upon completion.

7. Engineer retains the right to employ the use of magnification or other special viewing or measurement devices during inspection.

8. At the time of final inspection, the Fabricator shall assure that the equipment is cleaned of all foreign material and workings which might block the view of the Engineer. The equipment shall be in a position that allows for easy access and viewing and, at the request of the Engineer, shall be moved to allow viewing of all parts of the equipment.

9. Evidence of poor workmanship or lack of compliance with any aspect of the contract documents will be grounds for rejection of the equipment.

10. Subsequent repair of rejected equipment may, at the Engineer's option, be undertaken in an attempt to bring the equipment to an acceptable state. Repair procedures must be approved by the Engineer prior to implementation.

D. ENGINEER'S ACCEPTANCE:

1. The Engineer may employ destructive testing, such as ultimate tensile or flexural strength tests or glass content ignition tests, on available samples or use other non-destructive test methods, such as acoustic emission or ultrasonic polygauge thickness measurement, on the completed equipment for verification of compliance to the contract documents.

2. Testing performed by the Engineer shall be accomplished through use of applicable ASTM test methods when appropriate.

3. Hardness tests shall be made for acceptance by the Engineer on the liner surface using the Barcol impressor, Model GYZJ 934-1, calibrated at two points in accordance with ASTM D2583. Ten readings will be taken in a localized area, deleting the two highest and two lowest, and averaging the remaining six. Minimum acceptable Barcol hardness will be a reading of 30, unless otherwise specified in the pertinent equipment section.

4. An acetone sensitivity test shall also be performed by the Engineer as an acceptance criterion. Evidence of a sticky or tacky surface following rubbing with an acetone-saturated cloth shall be grounds for rejection of the equipment.

2.05 SHIPPING

A. VESSELS:

1. The Fabricator shall be responsible for proper packaging, loading, and protection of all materials to prevent transit and handling damage.

2. All equipment which is shipped in a horizontal position shall be mounted on padded cradles contacting at least 120 degrees of the vessel circumference. All end blocking used to prevent shifting of equipment must be padded.

3. Equipment shall be loaded with a minimum clearance of two inches between pieces (including external fittings, nozzles, or other projections) and the bed of the car or truck. When two or more units are shipped together, sufficient clearance shall be provided between units to prevent contact in transit.

4. Flange faces shall be protected by coverings of suitable plywood or hardboard, securely fastened.

5. Loose parts such as fasteners, gaskets, and accessory fittings shall be packaged securely to allow storage under field conditions.

6. All dry FRP field joining materials shall be precut in the shop and layered in order of laminate sequence, then labeled and packaged in sealed, moisture-proof containers for shipment.

7. When a number of loose items or field joining materials are packed in larger shipping crates, each crate will be individually marked or tagged as to its contents, clearly listing number and type of each item contained therein.

B. DUCTWORK:

1. The Fabricator shall be responsible for proper packaging, loading, and protection of all materials to prevent transit and handling damage.

2. All ducts shall be supported for shipment on cradles spaced no greater than 20 feet. Duct lengths shall also be supported by cradles within two feet of the duct end.

3. Cradles used to support duct or other equipment during shall contact at least 120 degrees of the circumference, be padded and match the outside diameter within +1/8 inch, -0 inch.

4. If duct is stacked in layers, cradles shall be used which support each piece of duct independently from the overlying and underlying equipment, such that no duct in a cradle carries more than its own weight.

5. Duct ends and flange faces shall be protected by covering with suitable material which is securely fastened.

6. If duct is gelcoated or painted, it shall be wrapped with foam or bubble wrap to protect finish during shipment.

7. Equipment shall be loaded with a minimum clearance of two inches between pieces (including external fittings, nozzles, or other projections) and the bed of the car or truck.

8. Loose parts such as fasteners, gaskets, and accessory fittings shall be packaged securely to allow storage under field conditions.

9. When a number of loose items are packed in larger shipping containers, each container will be individually marked or tagged as to its contents, clearly listing number and type of each item contained therein.

2.06 HANDLING FRP EQUIPMENT

The equipment shall not be rolled, slid, dropped, allowed to swing into other objects, or forced out of shape. Resulting impact and excessive distortions may cause cracking or crazing.

When working in or around FRP equipment, care should be exercised to prevent tools, scaffolding, or other objects from striking or being dropped on or inside the equipment. Soft-soled shoes should be worn by workers entering the equipment.

Proper rigging and hoisting practices shall be observed at all times.

The use of a crane is recommended both in lifting and positioning the equipment. Ideally, the slings or cables attached to the equipment should lift as nearly vertical as possible, and shall under no circumstances shall slings or cables lift more than 45 degrees from vertical. A spreader bar (lifting fixture) may be necessary to keep the lifting angle within this range.

Lifting lugs in most cases are not designed to accommodate lifting vessels in or from the horizontal position. Nylon slings encircling the tank should be used for this purpose and for righting the vessel to the vertical position.

Unless otherwise specified, use all lifting lugs, loaded uniformly for lifting vessels in the vertical position. The use of spreader bars is recommended to keep loads on lugs as nearly vertical and uniform as possible.

When lifting lugs are not provided, and it is necessary to use lifting slings in direct contact with the FRP equipment, the slings shall be woven nylon or canvas at least 3 inches wide. Care must be taken to assure that shackles, eyes, hooks, or other objects do not come into contact with the FRP equipment.

Do not attach lifting slings or cables to (nor allow them to come in contact with) any nozzles, flanges, gussets, or fittings other than lifting and/or anchor lugs.

PART 3--EXECUTION

3.01 GENERAL

FRP specialties shall be shipped, installed, joined and erected under the direction of factory-trained specialists. Where jointing is required, workers employed for these efforts shall have been trained in proper jointing techniques by the Fabricator. Fabricated equipment shall have the warning, "Plastic Equipment Handle with Care" stenciled on two sides in letters a minimum of 2 inches high.

3.02 ASSEMBLY AND ERECTION PLANS

Prior to assembly and erection of FRP towers, tanks, stacks and similar structures, the Contractor shall provide assembly and erection plans prepared by the Fabricator. The plans shall provide details on handling, field connections and final installation.

END OF SECTION

SECTION 13231

FIBERGLASS REINFORCED PLASTIC (FRP) TANKS

PART 1—GENERAL

1.01 DESCRIPTION

A. SCOPE:

This section specifies fiberglass reinforced plastic (FRP) tanks for Sodium Hydroxide Tanks, Acetic Acid, ferric chloride, and sodium hydroxide. All tanks under this specification will be located inside and not exposed to direct sunlight but shall have UV inhibitor exterior and interior coatings in accordance with Section 13230 – FRP Fabrications.

The requirements of Section 13230 – FRP Fabrications shall apply to all aspects of this specification section. For purposes of this section, references to design drawings, construction details, laminate sequences or laminate charts herein or contained in Section 13230 – FRP Fabrications shall be construed as references to the fabricator's approved design submittal as prepared per Paragraph 13231-1.05.

B. TYPE:

Tanks provided under this section shall be dished or open top, vertical, cylindrical, and of filament wound construction. Tank shall be supplied complete with all nozzles, level fittings, hatches, and anchoring system.

C. EQUIPMENT LIST:

Item	Equipment Number
Sodium Hydroxide Storage Tank 1	T-5210-1
Sodium Hydroxide Storage Tank 2	T-5210-2
Acetic Acid Storage Tank 1	T-5220
Ferric Chloride Storage Tank	T-5250
Sodium Hypochlorite Storage Tank	T-5230

D. PERFORMANCE AND DESIGN REQUIREMENTS:

Tanks furnished under this section shall have the following characteristics:

Item	Total volume gals, ea.	Operating volume gals, ea.	Dimensions	Overflow[1] water depth feet	Construction	Cover type
T-5210-1	15,900	14,900	13 ft dia 16 ft wall height	15.0 ft	FRP	Closed, Domed Top
T-5210-2	Same as T-5210-1					
T-5220	5,300	3,000	10 ft dia 9 ft wall height	10 ft	FRP	Closed, Domed Top
T5250	14,900	9,000	9 ft dia 12.5 ft wall height	11.5’	FRP	Closed, Domed Top
T-5230	1,200	798	10 ft dia 12.5 ft wall height	11.5’	FRP	Closed, Domed Top

[1] Depth to overflow shall be the invert of the overflow pipe.

E. SERVICE CONDITIONS:

Tanks furnished under this section shall be suitable for containing chemicals having the following characteristics:

Item	Chemical	Chemical strength (percent)	Specific gravity @ 68°F	Temp. (°F)	pH
T-5220	Acetic Acid	90%	1.9	70 to 100	1
T-5230	Sodium Hypochlorite	12-15%	1.9	70 to 100	12 - 13
T-5250	Ferric chloride solution	33%	1.9	70 to 100	<2
T-5210-1, 2	Sodium Hydroxide solution	20%	1.9	70 to 100	14

F. HEATING AND INSULATION

The following tanks shall be provided with heating and/or insulation as required to maintain the specified tank temperature:

Item	Chemical	Heating Required	Design Storage Temp. (^oF)	Design Ambient Temp. (^oF)
T-5210-1, 2	Sodium Hydroxide	Yes	75	15

1.02 QUALITY ASSURANCE

A. GENERAL:

Tank shall be fabricated and assembled in strict compliance with the design drawings and specifications. Filament winding utilizing either a helical wind or a hoop wind in combination with weft unidirectional tape shall be the fabrication method.

B. DESIGN REQUIREMENTS:

1. The fabricator shall perform all calculations necessary to ensure long-term, low risk service of the FRP equipment with minimum reasonable maintenance requirements. The design shall ensure proper functioning of the equipment at the stated operating conditions. The design shall include as a minimum: engineering calculations, materials selection and documented physical and mechanical properties, and all detailed drawings required for fabrication and assembly of the equipment.

2. The design shall satisfy all applicable national, regional, and local design and building codes. Wind and seismic forces shall be determined in accordance with the International Building Code for both the tank the empty tank and the tank full of the chemical specified in paragraph 13231-1.01.E. Seismic requirerments shall be as specified in Section 01900.

3. Detailed design of FRP tanks shall follow the procedures and methods, utilize the equations and formulas, and incorporate safety factors and allowable design stresses and strains set forth in ASME/ANSI RTP-1. Use of this standard, including the non-mandatory appendices where applicable, is required only for the design procedures and construction details. Shop qualification, qualification of laminators and joiners, QC documentation, and accreditation to RTP-1 is not required.

4. The design shall consider the interaction of the installed system including but not limited to; thermal expansion of tanks and vessels and the effects of external loading from piping, fans, pumps, platforms, etc.

5. The design shall allow for the most severe combination of conditions which may include any or all of the following:

   a. Internal or external pressure.

   b. Static head of contents (working and test conditions).

c. Mass of structure and contents.

d. Design temperature including upset conditions.

e. Superimposed loads, such as seismic forces.

f. Bending moments due to eccentric loads.

g. Localized loads acting at supports, lugs, and other attachments.

h. Shock loads.

i. Loads due to heating or cooling and thermal gradients.

j. Loads applied during transport or erection.

k. Loads imposed by personnel during erection and operations.

l. Fatigue.

m. Specifically:

1) Shell overturning due to wind/seismic:

a) Critical buckling.
b) Design factor on tension side.

2) Anchoring, due to overturning or internal pressure:

a) Lug design.
b) Analysis of attachment to shell.
c) Effect on shell knuckle.
d) Maximum pullout forces and moments reported for the foundation design.

3) Appendage support:

a) Effect of point loads on shells.
b) Interaction between towers under any load.

4) Internal pressure or vacuum:

a) Main shells, hoop and axial.
b) Cutout reinforcements at nozzles.
c) Effect on any discontinuities or special components (such as internal cone).

5) Thermal:

a) Differential expansion at temperature extremes.

b) Thermal gradient through laminate.

n. There will typically be other aspects which should be considered. It is the responsibility of the fabricator to identify and consider their effects, and to provide this information to the Engineer for review.

6. The fabricator shall provide documentation for all laminate properties used in the design. Laminates shall be similar in construction, layer sequence, resin type and cure to those used to determine tested properties. All properties shall be adjusted to reflect any reductions at operating temperatures.

7. The corrosion liner shall be a minimum of 100 mils in thickness and documentation shall be provided by the fabricator verifying veil type, liner thickness, and resin cure. Fifty mils of the corrosion liner shall be considered sacrificial and not included in determining structural wall thickness. Structural wall thickness shall be determined in accordance with ASME/ANSI RTP-1 and the requirements listed herein, and shall not be less than 0.375-inch for the tank shell, top, or bottom. The requirements of ASME/ANSI RTP-1 shall govern the design.

8. Laminate types may include hand lay-up, helical winding, and hoop/chop construction methods. In laminates with helix angles greater than 75 degrees and in all hoop/chop laminates, approximately 10 percent of the structural wall thickness shall be oriented at 0 degrees (longitudinal direction). This reinforcement shall be applied in two layers of weft unidirectional fabric and equally spaced within the structural wall.

9. Nozzles, gussets, accessways and shell reinforcements shall be determined according to the applicable text, tables and formulas in ASME/ANSI RTP-1.

10. Anchoring for tanks shall be accomplished using lugs and a continuous filament wound band or an integral filament wound load ledge with external anchor clips.

11. Internal beams and support attachments shall be designed using a maximum of 25 psi shear stress for secondary bonds. This shall also apply to design of external lugs required for ladders, platforms, etc.

12. Tank shall be designed to be completely filled with chemical at the design specific gravity.

C. FACTORY TESTING:

Testing of samples taken from the tanks' fabrication laminates shall be in accordance with Section 13230 – FRP Fabrications. Results of all tests shall be provided to the ENGINEER.

1.03 REFERENCES

References are as described in paragraph 1.04 of Section 13230 – FRP Fabrications. The documents referenced are a part of this section as specified and modified. When a referenced document contains references to other documents, those documents are included as references under this section as if referenced directly.

Unless otherwise specified, references to documents shall mean the documents in effect at the time of Advertisement for Bids or Invitation to Bid (or on the effective date of the Agreement if there were no Bids). If referenced documents have been discontinued by the issuing organization, references to those documents shall mean the replacement documents issued or otherwise identified by that organization or, if there are no replacement documents, the last version of the document before it was discontinued. Where document dates are given in the following listing, references to those documents shall mean the specific document version associated with that date, regardless of whether the document has been superseded by a version with a later date, discontinued or replaced.

1.04 ENVIRONMENTAL CONDITIONS

The tank shall be located indoors in Cherokee County, Georgia. See Section 01800 – Environmental Conditions for conditions.

1.05 SUBMITTALS

In addition to the submittals required under Section 13230 – FRP Fabrications, the Contractor shall provide, prior to beginning fabrication, the following submittals in accordance with Section 01300:

1. A copy of this specification section, with addendum updates included, and all referenced and applicable sections, with addendum updates included, with each paragraph check-marked to indicate specification compliance or marked to indicate requested deviations from specification requirements. Check marks (✓) shall denote full compliance with a paragraph as a whole. If deviations from the specifications are indicated, and therefore requested by the Contractor, each deviation shall be underlined and denoted by a number in the margin to the right of the identified paragraph, referenced to a detailed written explanation of the reasons for requesting the deviation. The Construction Manager shall be the final authority for determining acceptability of requested deviations. The remaining portions of the paragraph not underlined will signify compliance on the part of the Contractor with the specifications. Failure to include a copy of the marked-up specification sections, along with justification(s) for any requested deviations to the specification requirements, with the submittal shall be sufficient cause for rejection of the entire submittal with no further consideration.

2. A copy of the contract document mechanical layout drawings relating to the submitted equipment, with addendum updates that apply to the equipment in this section, marked to show specific changes necessary for the

equipment proposed in the submittal. If no changes are required, the drawing or drawings shall be marked "no changes required". Failure to include copies of the relevant drawings with the submittal shall be cause for rejection of the entire submittal with no further review.

3. Complete design calculations for all tanks. Calculations shall be signed by a structural engineer registered in the State of Georgia, verifying that the tanks have been designed to meet all design criteria given in these specifications.

4. Complete information developed by the fabricator which describes specifically how the equipment is to be built. This would most likely be in the form of shop drawings, standards, specifications, or other shop instructions, but may also be partially contained in QC records. This should include but not be limited to:

   a. Resin type.

   b. Type and amount of fillers.

   c. Nominal corrosion liner description.

   d. Reinforcement types for hand lay-up laminates.

   e. For filament wound laminates:

      1) Helix angle.
      2) Glass content range.
      3) Strand yield.
      4) Strand per inch in the winding band.
      5) Ply thickness.
      6) Amount of chop or unidirectional roving interspersed with winding, if any, and location within laminate.

   f. For all other components:

      1) Construction type.
      2) Laminate thicknesses.
      3) Ply sequences.
      4) Glass content range.

   g. For all secondary overlays (both interior and exterior):

      1) Laminate thicknesses.
      2) Ply sequences and widths.

   h. Construction details for all assembly and other special configurations, including:

1) Bottom/top attachments with knuckle configuration and overlays and thicknesses.
2) Support and anchor lugs, including attachment details.
3) Nozzles and installation, including cutout reinforcement, gusseting, etc.
4) Lateral or other support fabrication details, including ladder and platform attachment clips and/or shoulders.

i. Assembly and erection plans as described in Section 13230 paragraph 3.02.

5. Complete information on the tank heating system including the panel heater, control panel and associated wiring diagrams.

6. Warranty information.

PART 2—PRODUCTS

2.01 FABRICATION

The fiberglass reinforced plastic tank shall be fabricated by Augusta Fiberglass or Raven Tanks.

Fabrication of the FRP tanks shall be in accordance with Section 13230 – FRP Fabrications and the following:

1. Reinforcement surfacing veil, as described in Section 13230 – FRP Fabrications, shall be C-glass surfacing veil.

2. Interior layers of glass mat, as described in Section 13230 – FRP Fabrications, shall consist of three layers of 1-1/2 ounces per square foot glass mat.

3. For all laminates, the corrosion resistant liner shall be followed by a filament wound structural laminate applied in accordance with Section 13230 – FRP Fabrications.

4. All exterior surfaces shall be resin rich and reinforced with one layer of C-glass surfacing veil.

5. Laminate sequences and thicknesses, as specified, shall be maintained.

6. The tanks shall be shop assembled to assure proper fit. Subassemblies shall be numbered and mating flanges or elements shall be match marked to assure correct alignment and correct field assembly.

7. Minimum corrosion liner thickness shall be 0.100-inch. Excess liner thickness shall be added to total wall thickness, but shall not conflict with tolerance requirements.

8. Filament winding angle shall be 60 degrees ± 5 degrees.

9. The resin to be used shall be Hetron FR 922 with 3% antimony trioxide, or approved equal, if reviewed and approved in writing by the Engineer. Antimony trioxide shall not be used in the corrosion liner.

10. Pigments shall not be used in the inner lamina. However, a pigmented surface coat shall be applied to the exterior surface of the tanks. The color shall be as directed in writing by the Engineer.

11. All tank connections shall be fabricated of the same material as the tank wall and shall have the same inner corrosion barrier as the tank wall.

2.02 TANK FITTINGS

The required fittings are indicated below. The exact positioning of the connections will be noted by the Owner on the returned shop drawings.

T-5210-1 and T5210-2
Nozzles as shown on 52-I-601 and the following additional requirements:

Item	Location
1 - 24” Manway	Top of tank
1 – 2” Fill	Top of tank
1 – 6” Vent	Top of tank
1 – 4” Instrument connection	Top of tank
2 – 4” Spares with blind flanges	Top of tank
1- 24” Manway	Top of tank
1 – 3” Overflow	Side of tank, 6” from top
1 – 24” Manway	Side of tank, 2’ from bottom
1 – 3” Drain	Side of tank
1 – 3” Suction	Side of tank
1 Ladder	To top of tank
1 Railing and gate[a]	Circumference of top of tank
2 – 2” Blind flanges for sight glass	See paragraph 13231-2.05

T-5220
Nozzles as shown on 52-I-602 and the following additional requirements:

Item	Location
1 - 24” Manway	Top of tank
1 – 2” Fill	Top of tank
1 – 6” Vent	Top of tank
1 – 4” Instrument connection	Top of tank
2 – 4” Spares with blind flanges	Top of tank
1 – 4” Overflow	Side of tank, 6” from top
1 – 24” Manway	Side of tank, 2’ from bottom
1 – 3” Drain	Side of tank

1 – 3”	Suction	Side of tank
1	Ladder	To top of tank
1	Railing and gate[a]	Circumference of top of tank
2 – 2”	Blind flanges for sight glass	See paragraph 13231-2.05

T-5230
Nozzles as shown on 52-I-603 and the following additinoal requirements.

Item		Location
1 - 24”	Manway	Top of tank
1 – 2”	Fill	Top of tank
1 – 6”	Vent	Top of tank
1 – 4”	Instrument connection	Top of tank
2 – 4”	Spares with blind flanges	Top of tank
1 – 3”	Overflow	Side of tank, 6” from top
1 – 24”	Manway	Side of tank, 2’ from bottom
1 – 3”	Drain	Side of tank
1 – 3”	Suction	Side of tank
1	Ladder	To top of tank
1	Railing and gate[a]	Circumference of top of tank
2 – 2”	Blind flanges for sight glass	See paragraph 13231-2.05

T5250
Nozzles as shown on 52-I-605 and the following additinoal requirements:

Item		Location
1 - 24”	Manway	Top of tank
1 – 2”	Fill	Top of tank
1 – 6”	Vent	Top of tank
1 – 4”	Instrument connection	Top of tank
2 – 4”	Spares with blind flanges	Top of tank
1 – 3”	Overflow	Side of tank, 6” from top
1 – 24”	Manway	Side of tank, 2’ from bottom
1 – 3”	Drain	Side of tank
1 – 3”	Suction	Side of tank
1	Ladder	To top of tank
1	Railing and gate[a]	Circumference of top of tank
2 – 2”	Blind flanges for sight glass	See paragraph 13231-2.05

[a] Railing and self-closing gate as required by OSHA standards.

Fitting and flange location shall be as shown on drawings with all flanges located on the tank top within 18-inch of the tank perimeter walls, unless shown otherwise. Fittings located on the tank top shall not extend over 6-inch above the tank top. All nozzles shall be ANSI 150# flanges.

2.03 METAL FASTENERS AND APPURTENANCES

All wires, anchor lugs, bolts, and fasteners shall be AISI type 316 stainless steel except for those that are on the ferric chloride and sodium hypochlorite tanks, which shall be Hastelloy-C.

2.04 GASKETS

Unless specified otherwise, gaskets shall be EPDM or Viton for ferric chloride.

2.05 SIGHT GLASS

Sight glasses shall be provided on all tanks except the Ferric Chloride tank. Site glass shall be clear PVC. Sight glass shall consist of two tank nozzles, one at the invert and the other at the top of the sidewall, connected with clear PVC pipe. Nozzles, pipes and isolation valves shall be two inches in diameter. A graduated scale directly behind the site glass shall also be provided. The scale shall indicate the tank volume remaining in 200 gallon increments. Scale markings and lettering shall be black, 1-inch tall, with a light colored background.

The sight glass for the NaOH Tank will be designed for and provided with insulation and heat tracing. The insulation and heat tracing system shall be designed for the design NaOH storage temperature.

The Ferric Chloride tank shall be provided with a magnetic liquid level indicator. Level indicator shall consist of two tank nozzles, one at the invert and the other at the top of the sidewall, connected with the level indicator pipe. Nozzles, pipes and isolation valves shall be two inches in diameter. The level indicator shall consist of the float housing, magnetic float and rotating flag assembly. The flag indication system shall be provided with an indicating scale. Units shall be constructed of non-metallic components suitable for the chemicals monitored. Liquid level indicators shall be Gems Suresite or approved equal.

2.06 TANK HEATING AND INSULATION

Panel heaters shall be provided to heat the NaOH storage tank. Heaters shall be multi-layer epoxy resing and fiberglass construction with foil heating elements. Panels shall be suiotable for use with fiberglass storage tanks. Three heater shall be provided evenly spaced around the tank perimeter. Each heater shall have a nominal rating of 550 W. The heating system shall be provided with a NEMA 4X control box with electroninc control thermostat and high temperature thermostat, The box shall be pre-wired and tested and include as a minimum a terminal block, contactor and power on light. Panels shall be type ELP Heating Panels as manufacturerd by Hotfoil or approved equal.

Insulation shall be 2” polyurethane insulation with an FRP skin with minimin 3/16” thickness and UV inhibitors.

2.07 ACCESS HATCHES

Each tank shall be provided with one 24-inch flanged liquid tight access hatch on the top of the tank. Location shall be as shown on the Drawings.

2.08 SIGNS

Provide identification signs per specification Section 10440 – Identification Signs, which includes stenciling the name of the tank content and tank identification numbers. Provide warning signs per specification Section 10441 – Warning Signs.

2.09 PRODUCT DATA

The following product data shall be provided in accordance with Section 01300:

1. Signed affidavit by the tank Fabricator indicating that the tank was successfully factory tested.

2. Statement by the tank Fabricator that the tank material meets the test properties specified.

3. Applicable operating and maintenance information specified in Section 01730.

4. Fabricator's inspection reports as described in Section 13230 – FRP Fabrications.

5. Fabricator's certifications (Form 11000-A, per Section 01999) that the equipment has been properly installed, aligned and tested and meets all requirements for satisfactory performance under the conditions specified.

6. Fabricator's certified written warranty.

2.10 TANK COLORS

The final tank colors shall be selected by the Owner from the manufacturer's standard color charts.

PART 3—EXECUTION

3.01 SHIPMENT, PROTECTION AND STORAGE

Tanks shall be shipped, protected, and stored in accordance with Section 01605.

Tanks shall be shipped in ways which will prevent damage to the tanks. Damaged items will not be accepted except in cases of minor damage that have been satisfactorily repaired and are acceptable to the Construction Manager.

All equipment shall be protected against damage from moisture, dust, handling, or other cause during transport from Fabricator's premises to site.

Stiffeners shall be used where necessary to maintain shapes and to give rigidity. Parts shall be delivered in assembled or sub-assembled units where possible.

Each item of equipment and valve shall have permanently affixed to it a label or tag with its tank number designated in this contract. Marker shall be of stainless steel. Location of label will be easily visible.

3.02 INSPECTION

Laminate defects and their allowable limits and tolerances shall be in accordance with Section 13230 – FRP Fabrications. Surfaces shall also be tested for acetone sensitivity as an indication of air inhibition. Air-inhibited surfaces are not allowed.

3.03 INSTALLATION

Each tank shall be installed as shown and in accordance with the Fabricator's written instructions. Each tank shall rest on a level, even base of concrete so that the entire bottom of the tank is supported. The installation shall be certified on Form 11000-A specified in Section 01999.

3.04 FIELD TESTING

Each tank shall be hydraulically field tested by filling the entire tank with water and monitoring the tank as well as all fitting connections for at least 24 hours. Any leaks shall be corrected by the Fabricator's representative prior to acceptance. Following successful field tank testing, each tank shall be completely emptied and dried. Field testing shall be in accordance with the requirements specified in Section 01660.

END OF SECTION

SECTION 13234

FIBERGLASS REINFORCED PLASTIC (FRP) DUCTWORK

PART 1--GENERAL

1.01 SUMMARY

A. SCOPE:

This section specifies fiberglass reinforced plastic (FRP) ductwork. Unless specified otherwise, all ductwork shall be filament wound construction.

B. STANDARDS:

The requirements of Section 13230 shall apply to all aspects of this specification section. In cases of conflict, this section shall take precedence over Section 13230.

1.02 SERVICE REQUIREMENTS

A. AIR STREAM CONTENTS:

Saturated air streams at 40 to 120 degrees F containing hydrogen sulfide in concentrations up to 50 ppm and droplets of sulfuric acid.

B. PRESSURE AND VACUUM:

Design conditions are 20 inches water column pressure and 12 inches water column vacuum. A minimum structural safety factor of 10:1 shall be used in the design of ductwork for tensile or flexural stress conditions. A minimum safety factor of 5:1 shall be used for conditions of elastic stability, such as buckling under vacuum loads.

1.03 REFERENCES

References are described in Section 13230.

1.04 ENVIRONMENTAL CONDITIONS

Environmental conditions are as described in Section 01800.

1.05 SUBMITTALS

The following submittal information shall be provided in accordance with Section 01300:

1. A copy of this specification section, with addendum updates included, and all referenced and applicable sections, with addendum updates included, with each paragraph check-marked to indicate specification compliance or marked to indicate requested deviations from specification

requirements. A check mark shall denote full compliance with a paragraph as a whole. If deviations from the specifications are indicated, and therefore requested by the Contractor, each deviation shall be underlined and denoted by a number in the margin to the right of the identified paragraph, referenced to a detailed written explanation of the reasons for requesting the deviation. The Engineer shall be the final authority for determining acceptability of requested deviations. The remaining portions of the paragraph not underlined will signify compliance on the part of the Contractor with the specifications. *Failure to include a copy of the marked-up specification sections, along with justification(s) for any requested deviations to the specification requirements, with the submittal shall be sufficient cause for rejection of the entire submittal with no further consideration.*

2. Complete damper shop drawings illustrating component configuration, dimensions, and materials list.

3. Certified damper leakage test results in accordance with AMCA 500 standards, pressure drop characteristics, and actuator torque requirements.

4. Proposed FRP ductwork plan, including hanger and support types and locations, field joint locations, inspection plates, drains, blast gates, dampers, expansion boots, etc.

5. Certification from the resin manufacturer that the selected resin and catalyst systems are appropriate for the service conditions of the duct systems, as specified in Sections 01800 and 13234.

6. Calculations and complete fabrication details of special system components specified in paragraph 13234-2.01E. Approval of design is required prior to the start of fabrication.

7. Qualifications of the Fabricator and Field Joining Contractor.

PART 2--PRODUCTS

2.01 MANUFACTURERS

The Owner and Engineer believe the following candidate manufacturers are capable of producing equipment and/or products that will satisfy the requirements of this Section. This statement, however, shall not be construed as an endorsement of a particular manufacturer's products, nor shall it be construed that named manufacturers' standard equipment or products will comply with the requirements of this Section. Candidate manufacturers include ECS, Daniel Mechanical, Augusta Fiberglass, Spunstrand, or equal.

2.02 FRP DUCTWORK

A. DESIGN CRITERIA:

1. Equipment: FRP Ductwork.
2. Resin: Premium grade vinylester resin such as AOC Vipel KO22, Derakane 510C-350, Hetron 992FR, or Reichhold Dion VER9300FR, or equal, if approved in writing by the Engineer.
3. Antimony trioxide or pentoxide shall be added to the resin of the structural laminates only to achieve Class-I fire retardance in accordance with ASTM E-84. Antimony shall not be used in the corrosion liner.
4. Special Catalyst: In accordance with the recommendations of the resin manufacturer for the intended service.
5. Minimum Barcol Hardness: 30
6. Surfacing Veil (Inner Surface): One (1) layer of 10 mil C-glass surfacing veil.
7. Interior Layer: Two (2) layers of 1-1/2 oz./sq. ft. mat.
8. Corrosion Liner Thickness, minimum: 100 mils.
9. Filament Winding Helix Angle: 55° to 65°; Tolerance: ±2°
10. Filament Winding Cycle Thickness, Maximum: 0.06"
11. Filament Wound Structural Wall Glass Content: 55 percent to 65 percent.
12. Structural layers: Natural color, no pigments allowed.
13. Exterior surface coat and 10 mil C-glass surfacing veil required; color to be determined by the Engineer.
14. Postcure: Equipment to be postcured in accordance with the recommendations of the resin manufacturer for the intended service.
15. Marking: In addition to the requirements of paragraph 13230-2.03.C, all spool assemblies and pieces shall be identified with piece mark numbers using non-water-soluble paint, easily removable with agents that will not attack the finish of the FRP Ductwork.
16. The exterior of all FRP duct to be located inside of any buildings shall be coated with two (2) coats of PPG Speedhide Flat Latex paint No. 42-7, or equal, in accordance with the manufacturer's recommendations, for smoke rating and additional fire retardancy.
17. Any damage to this paint coat occurring during installation shall be repaired promptly, restoring the paint coat to the original condition.

B. DETAILS:

As a minimum, FRP ductwork shall be constructed in accordance with the thicknesses, laminate sequences and detail drawings that follow at the end of this section. If the design requirements dictate that increased thickness or other changes are required, they shall be submitted for approval of the Engineer. Details shall be used in conjunction with contract drawings and Section 13230. Details are as follows:

Detail-1, FRP Duct and Fitting Thickness
Detail-2, FRP Flanges
Detail-3, Expansion Boot
Detail-4, 1-1/2" Dia. Drain Nozzle Installation
Detail-5, FRP Butt and Miter Joints

Detail-6, FRP Tee and Lateral Joints
Detail 7, Typical Round Blast Gate, All FRP Construction
Detail 8, FRP Zero Leak Damper

C. ELBOWS:

Elbows 30 inch diameter and smaller shall be one piece molded, smooth turn, hand lay-up construction. Larger elbows may be fabricated from straight duct sections, using miter joints per the drawing details in this section. Mitered elbows 45 degrees and less shall be two piece, one miter joint. Mitered elbows 46 to 90 degrees shall be three piece with two miter joints. All elbows shall be large radius (1.5 times the diameter) except as otherwise required.

D. LAMINATE SEQUENCE TABLES FOR FRP DUCTWORK:

Key for Tables 1 and 2:
C = 10 mil C-glass surfacing veil
M = 1-1/2 oz./sq. ft. mat
E = Exotherm ply, 1-1/2 oz./sq. ft. mat
R = 24 oz./sq. yd., 5x4 plain weave, woven roving
FW = Filament winding to the thickness specified.

Table 1. Helix Wound Laminate Composition

Thk.	C	M	E	R	Sequence of plies
0.21"	2	1	1		CME ⇒ 0.11" F.W. ⇒C
0.24"	2	1	1		CME ⇒ 0.14" F.W. ⇒C
0.27"	2	1	1		CME ⇒ 0.17" F.W. ⇒C
0.32"	2	1	1		CME ⇒ 0.22" F.W. ⇒C
0.35"	2	1	1		CME ⇒ 0.25" F.W. ⇒C
0.38"	2	1	1		CME ⇒ 0.28" F.W. ⇒C
0.41"	2	1	1		CME ⇒ 0.31" F.W. ⇒C

Table 2. Hand Lay-Up Laminate Composition

Thk.	C	M	E	R	Sequence of plies
0.24"	2	4	1	1	CME MRMMC
0.33"	2	5	1	2	CME MRMRMMC
0.39"	2	6	1	3	CME MRMRMRMMC
0.46"	2	6	2	4	CME MRMRE MRMRMC
0.50"	2	7	2	4	CME MRMRMRE MRMMC
0.54"	2	7	2	5	CME MRMRMRE MRMRMC
0.57"	2	8	2	5	CME MRMRMRE MRMRMMC
0.64"	2	9	2	6	CME MRMRMRE MRMRMRMMC

E. SPECIAL SYSTEM COMPONENTS:

Fabricator shall be responsible for the design of rectangular duct, transitions, or any special system components not specifically detailed in this section. Deflection of flat panels shall be limited to 1 percent of the panel width at the system operating pressure. Rectangular

duct and flanges shall be fabricated in one piece with a minimum radius of 1/2" in all corners. Rectangular duct shall not be assembled from multiple flat panels.

F. TURNING VANES:

Turning vanes shall be provided where indicated on the drawings and in accordance with ASHRAE recommendations. All vanes shall have sufficient section and stiffness to operate without flutter or vibration under the airflow conditions indicated. Turning vanes shall be airfoil section with internal metal reinforcement and FRP laminate overlay or airfoil section, all Type 316 stainless steel. Duct fabricator shall propose and submit construction, location, and installation details of vanes and splitters.

2.03 FASTENERS

Bolts, nuts, and washers shall be stainless steel, AISI Type 316. Type 316 stainless steel backing strips, drilled for the above bolting requirements, shall be employed for all connections at fans, demisting sections, and wherever shear or moment loads may be encountered on duct connections.

2.04 GASKETS

Gaskets shall be EPDM, Viton, or Buna-N.

2.05 EXPANSION BOOTS

Expansion boots shall be as shown on the detail drawings in this section, flanged one-piece molded reinforced EPDM, a minimum thickness of 1/8-inch with stainless steel split retaining rings. Expansion boots shall be Mercer Rubber Company, Duct Connector Model MI-9, or equal. Provide a 1/2-inch diameter galvanized U-bolt to function as a guide at the closest pipe support on each side of each expansion boot. Install U-bolt with approximately 1/8-inch clearance between duct and U-bolt to allow axial movement of duct. For expansion/ flexible connections at fans or blowers, refer to those equipment specifications.

For exterior ducts, Contractor shall size the expansion boots based on a minimum temperature of -30°F and a maximum temperature of 105°F, using the coefficient of thermal expansion for the particular duct work being provided by the Contractor.

2.06 SUPPORTS AND HANGERS

FRP ductwork shall be supported in accordance with Section 15050, and at intervals no greater than those indicated in the table below. Supports and hangers shall transmit all ductwork loads into the building structural frame through a system of intermediate beams and struts as necessary to accommodate requirements of these specifications. The Contractor shall submit construction details for supports and hangers and its proposed plan for location and type of supports, including location of any required expansion joints. Acceptance of the proposed locations and construction details by the Engineer is required prior to the start of fabrication. Where supports and hangers are detailed on the Drawings, they shall be provided as shown.

FRP Ductwork Allowable Spans:

Inside Diameter - inches	Maximum span, feet
<20	12
24-36	15
42	17
48-54	20
60	22
72	24

Hangers and supports shall be lined with 1/8-inch thick neoprene, bonded to the metal hanger or support, to cushion the duct.

Hangers and supports shall fit the exterior of the duct closely and extend completely around the duct. Minimum width shall be the larger of 4 inches or 1/8 of the duct diameter.

2.07 DAMPERS

A. GENERAL:

Dampers shall have FRP or Type 316 stainless steel blades, Type 316 stainless steel shafts and hardware, and permanently lubricated bearings of material impervious to attack by acids and caustics. Damper frames shall be fabricated to match connecting ductwork. Flanges shall be pre-punched and shall match duct flanges and bolt patterns as specified in this section. No shop fabricated or spooled in duct dampers will be allowed.

1. Stuffing boxes shall be provided for gas-tight seals to prevent leakage at all shaft ductwork penetrations. Stuffing boxes shall be adjustable and shall contain a minimum of two sets of packing glands. Bearings shall be flange mounted, located outside the air stream. Bearings may be oil impregnated sintered bronze or relubricable rolling element.

2. Damper linkage shall be capable of transmitting twice the maximum torque required by the damper at 20 inches differential pressure. Linkage lever arms shall be a minimum of 3 inches, and the lever arms shall be welded to the axles. All linkage connections shall be supplied with oil impregnated bronze bearings.

3. Actuators for dampers having torque requirements of 500 inch-pounds or less shall have heavy-duty manual locking quadrants. Actuators for dampers having torque requirements in excess of 500 inch-pounds shall have manual worm gear actuators with hand wheel. Damper actuators not readily accessible shall be provided with chain wheel actuators.

4. Damper supplier shall provide certified leakage, pressure drop, and torque data for each damper type and size. Data shall result from prototype

testing conducted in accordance with AMCA 500 test standards, in an AMCA certified test facility.

B. RECTANGULAR DAMPERS:

Rectangular dampers shall be opposed blade dampers of the airfoil design. Rectangular damper blades shall have a minimum thickness of 16 gauge and a maximum width of 9 inches. Axles shall have a minimum diameter of 3/4-inch, shall be solid, and shall extend the full length of the blade stuffing boxes and bearings. Blades shall be through-bolted to axles. Blade edge and axle deflection produced by 20 inches differential pressure across the closed damper shall not exceed 1/360th of the span or 1/8-inch, whichever is less.

Seals shall be provided on rectangular damper blade edges and jambs. Seal material shall be closed cell elastomer material, and shall be applied with an adhesive which will provide a bond strength greater than the tensile strength of the seal material. Seal material and adhesive shall be impervious to attack by acids and caustics.

Leakage through the closed damper at 70° F and 10 inches water column differential pressure shall not exceed 30 cfm per square foot of conduit cross-sectional area for rectangular dampers.

Damper linkage shall be capable of transmitting twice the maximum torque required by the damper at 20 inches differential pressure. Linkage lever arms shall be a minimum of 3 inches, and the lever arms shall be tack-welded to the axles.

C. STANDARD ROUND DAMPERS:

Round dampers shall be butterfly dampers suitable for balancing and shutoff. Dampers shall be constructed between two flanges unless shown otherwise. Minimum damper blade thickness shall be equal to flange thickness specified in this section. Share seal shall be Viton O-ring. Leakage through the closed damper at 70 degrees F and 10 inches water column differential pressure shall not exceed 30 cfm per square foot of conduit cross-sectional area. Standard round dampers shall be Daniel Mechanical, Spunstrand, Swartout, or approved equal.

D. ZERO LEAK ROUND DAMPERS:

Zero leak dampers shall be suitable for air tight sealing, and leak free at 28 inches w.c. pressure for one hour. Dampers shall be constructed between two flanges. Minimum damper blade thickness shall be equal to flange thickness specified in this section. Share seal shall be Viton O-ring. Zero leak dampers shall be provided similar to the detail drawing in this specification section and installed at the locations shown on the contract drawings. Zero leak dampers shall be Daniel Mechanical, Spunstrand, Swartout, or approved equal. Unless shown otherwise on drawings, all round dampers shall be zero leak.

E. ACTUATORS:

All actuators for all dampers shall be independently supported.

2.08 INSPECTION PLATES

Removable inspection plates, covering 8 inch round access holes, shall be provided at all fan inlet and discharge connections and upstream and downstream from all operable fittings such as dampers, screens, filters, and at all primary instrument locations. Inspection plates shall be gasketed and shall make an airtight seal with the parent duct. Inspection plates shall be fabricated of the same material as the parent duct.

Fabricator shall propose and submit construction, location, and installation details of inspection plates.

2.09 BLAST GATES

Blast gates shall be provided in accordance with this specification section and installed at the locations shown on the contract drawings.

2.10 DRAINS

Drains sumps shall be 1 1/2-inch flanged outlets fabricated and installed in accordance with the detail drawings in this section. Each drain shall be fitted with a 316 stainless steel blind flange with a 1 inch NPT PVC half-coupling mounted at its center.

In addition to drains shown on the drawings, drain sumps with 1 1/2-inch minimum flanged outlets shall be provided at all low points. All drain sumps shall be fitted with a 1 1/2-inch PVC ball valve. Drains shall be FRP or Schedule 80 PVC.

Fabricator shall propose and submit construction, location, and installation details of drain sumps.

2.11 PRODUCT DATA

The following information shall be provided in accordance with Section 01300:

1. Installation certification Form 11000-A as specified in paragraph 13234-3.02.

PART 3--EXECUTION

3.01 GENERAL

Refer to Section 13230. Unless otherwise specified, all ductwork shall be filament wound construction.

3.02 INSTALLATION

A. GENERAL:

All material and equipment shall be installed as specified and as required by the applicable state and local codes. All ductwork indicated on the drawings is schematic. Therefore, changes in duct size, duct configuration, and location may be necessary to conform to field conditions. All such changes shall be submitted to the Engineer for approval prior to fabrication or construction.

B. FIELD JOINING MATERIALS:

FRP duct manufacturer shall supply all materials needed for any required FRP duct field joining. Supply of these materials shall be in accordance with the requirements of this Section and Section 13230.

C. FIELD JOINING:

Any required field joining shall be accomplished by the Field Joining Contractor in accordance with the requirements of this section and Section 13230. The Field Joining Contractor shall have a minimum five years experience in FRP ductwork.

D. INSTALLATION AND SUPPORT:

FRP ductwork shall be installed and supported in accordance with Chapter 11 of the Uniform Mechanical Code. Ductwork shall be supported as described in Paragraph 13234-2.06. Large elbows and terminal ends of ducts shall be supported independently. Flexible connections as described in Paragraph 13234-2.05 shall be provided between fans and ductwork, and elsewhere as indicated on the layout drawings.

E. CERTIFICATION:

The installation shall be certified on Form 11000-A, Section 01999.

3.03 FIELD QUALITY CONTROL

A. TESTING:

All ductwork shall be leak-tested as described in Section 15050. All audible leaks shall be sealed. All tests shall be scheduled with the Engineer by giving 24 hours notice. The Contractor shall provide necessary fittings, blind flanges, etc. to isolate sections of duct and to enable all sections of ductwork to be tested.

B. MANUFACTURER'S SERVICES:

The Fabricator shall provide a representative on-site at the start of the installation of the ductwork to supervise installation of the FRP duct system. To ensure the Contractor is employing the proper procedures, the Fabricator shall remain on-site to witness installation of all

ductwork. The Fabricator shall be on-site no less than two 8-hour days during the start of installation.

The Fabricator shall instruct the Contractor on the proper installation procedures at any time the Fabricator and/or the Engineer witnesses improper installation practices.

DUCT I.D.	F.W. WALL THK. (TABLE 1)	H.L.U. WALL THK. (TABLE 2)
Up to 12"	0.21"	0.24"
14"	0.21"	0.24"
16"	0.21"	0.24"
18"	0.24"	0.33"
20”	0.24"	0.33"
24"	0.27"	0.33"
30"	0.32"	0.39"
36"	0.35"	0.46"
42"	0.38"	0.50"
48"	0.41"	0.54"
54”	0.41"	0.64”
60”	0.41"	0.64”

FRP DUCT AND FITTING THICKNESS

DETAIL-1

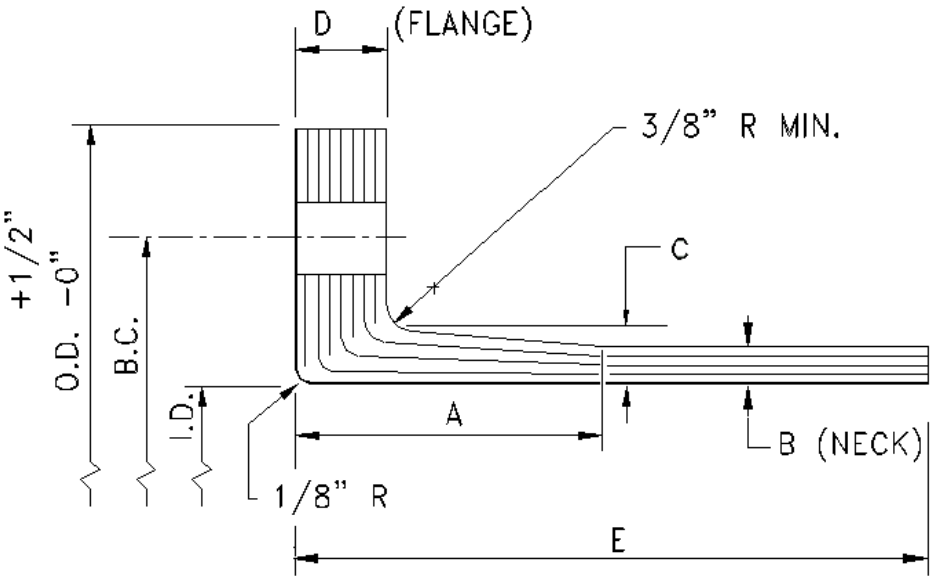

FRP DRILLED FLANGE - DUCT DRILLING

NOZZLE I.D.	NOZZLE O.D	BOLT CIRCLE	NO. OF BOLT HOLES	DIA. OF BOLT HOLES	A	B (Table 2)	C	D
Up to 12"	16 3/8"	15"	12	1/2"	2"	0.24"	0.37"	0.50"
14"	18 3/8"	17"	12	1/2"	2"	0.24"	0.37"	0.50"
16"	20 3/8"	19"	16	1/2"	2 1/2"	0.24"	0.44"	0.63"
18"	22 3/8"	21"	16	1/2"	2 1/2"	0.33"	0.48"	0.63"
20"	24 3/8"	23"	20	1/2"	2 1/2"	0.33"	0.48"	0.63"
24"	28 3/8"	27"	20	1/2"	2 1/2"	0.33"	0.48"	0.63"
30"	34 3/8"	33"	28	1/2"	2 1/2"	0.39"	0.51"	0.63"
36”	40 3/8”	39”	32	1/2”	2 1/2"	0.46”	0.55”	0.63”
42”	46 3/8”	45”	36	1/2"	3”	0.50”	0.63”	0.75”
48”	54 3/8”	52”	44	5/8”	4”	0.54”	0.77”	1.00”
54”	66 3/8”	58”	44	5/8”	4”	0.64”	1.00”	1.00”
60”	66 3/8”	64”	52	5/8”	4”	0.64”	1.00”	1.00”

FRP DRILLED FLANGE – 125/150 PATTERN

NOZZLE I.D.	NOZZLE O.D	BOLT CIRCLE	NO. OF BOLT HOLES	DIA. OF BOLT HOLES	A	B (Table 2)	C	D	E
1-1/2"	5"	3-7/8"	4	5/8"	2"	0.24"	0.50"	0.50"	8"

FRP FLANGES
DETAIL-2

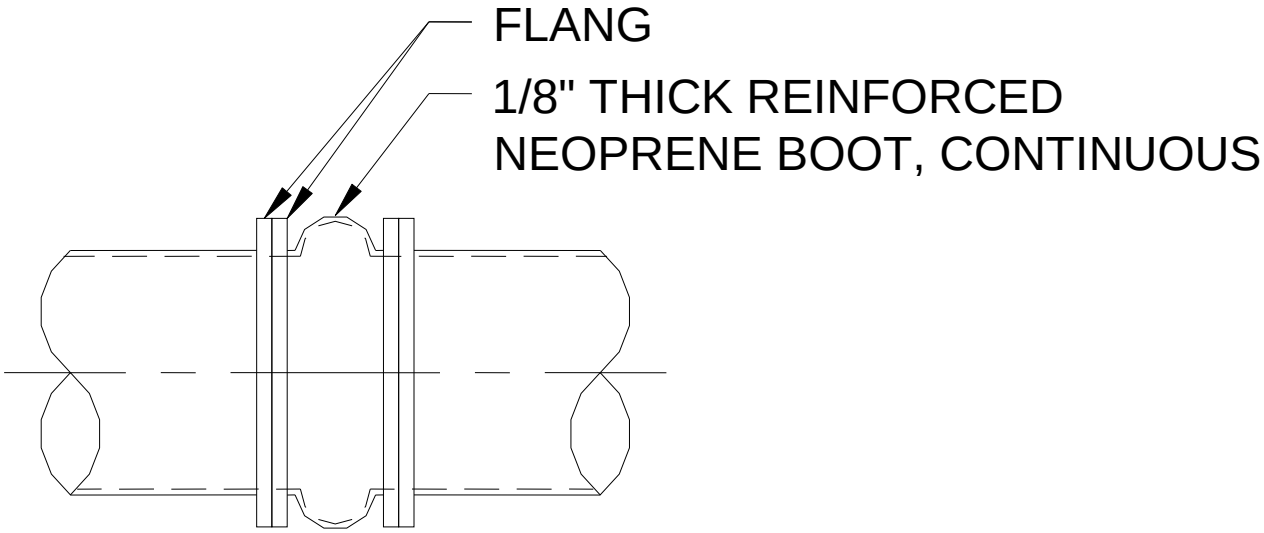

EXPANSION BOOT

DETAIL-3

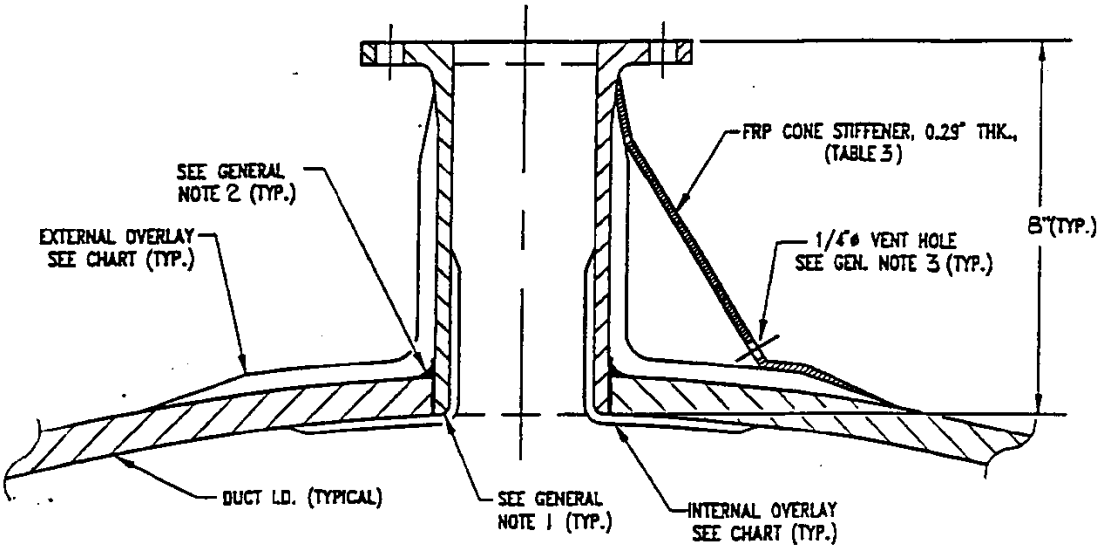

NOZZLE I.D.	EXTERNAL OVERLAY		INTERNAL OVERLAY	
	THK. (TABLE 2)	WIDTH	THK.	WIDTH.
1 1/2"	0.29"	10"	(MMCC)"	4"

GENERAL NOTES:

1. Radius inside edge of nozzle, 1/8" min. to 1/4" max.
2. Fill voids with resin putty. Flare putty into a radius 1/4" min. to 3/8" max.
3. Locate vent hole as low as possible, resin coat edge of hole.

1 ½" DIA. DRAIN AND NOZZLE INSTALLATION

DETAIL-4

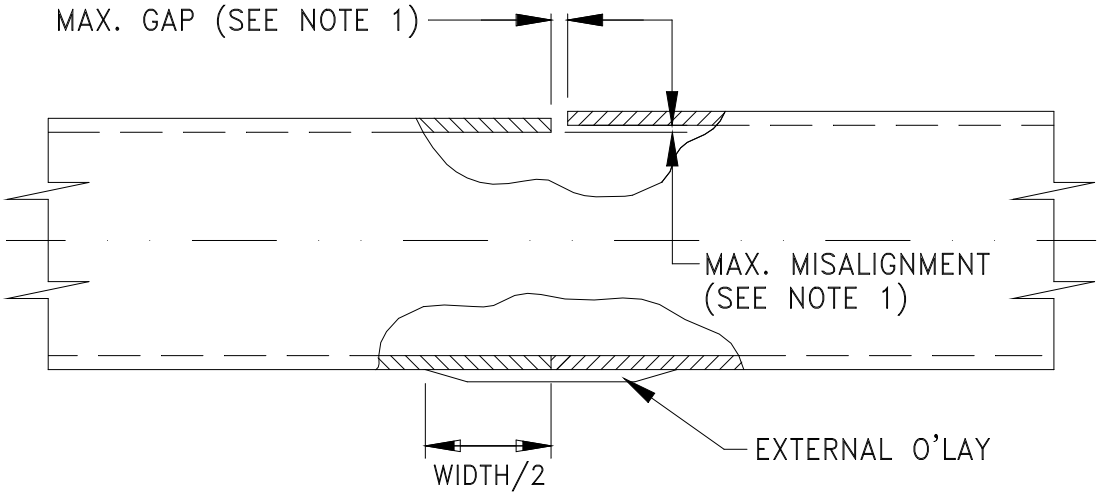

FRP DUCT BUTT AND MITER JOINT OVERLAY		
DUCT I.D.	EXTERNAL OVERLAY (TABLE 2)	
	THICKNESS	WIDTH
Up to 12"	0.24"	8"
14"	0.24"	8"
16"	0.24"	8"
18"	0.33"	10"
20"	0.33"	10"
24"	0.33"	10"
30"	0.42"	12"
36"	0.46"	12"
42"	0.54"	12"
48”	0.54”	12”
54”	0.64”	14”
60”	0.64”	16”

NOTES:
1. See Section 13230 for assembly tolerances.
2. For 24" diameter and larger, and where accessible, apply an internal overlay (MMC) 6"wide.

FRP BUTT AND MITER JOINTS

DETAIL-5

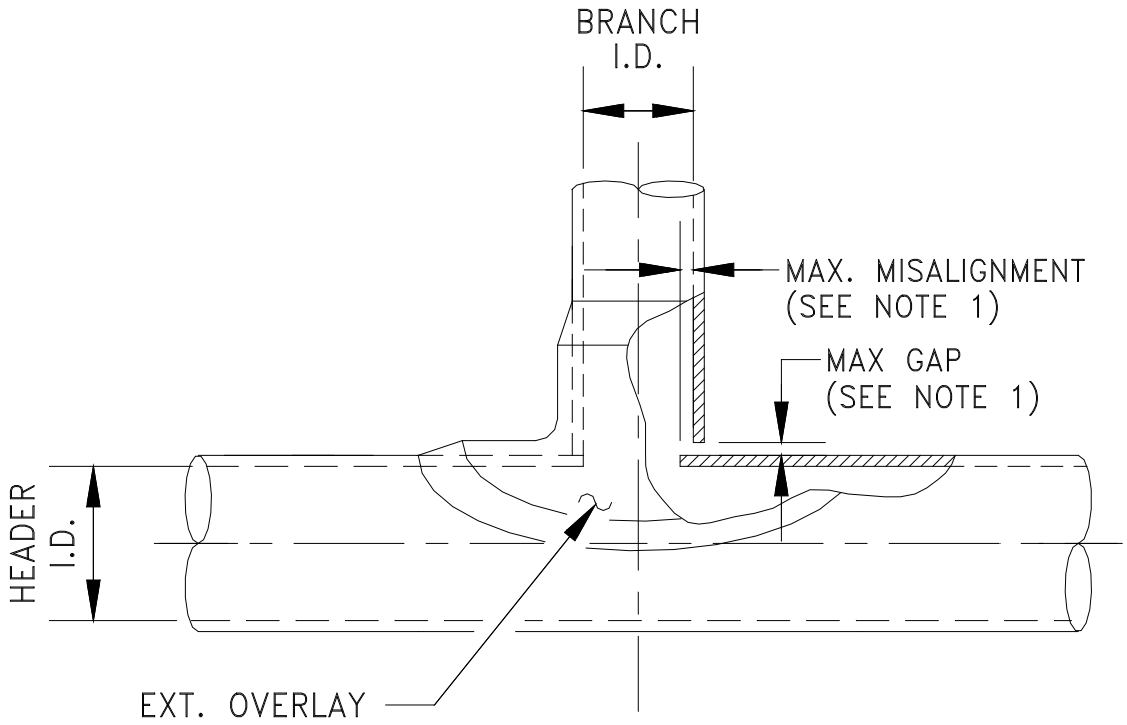

FRP DUCT TEE AND LATERAL JOINT OVERLAY		
DUCT	EXTERNAL OVERLAY (TABLE 2)	
I.D.	THICKNESS	WIDTH
12"	0.33"	10"
14"	0.33"	10"
16"	0.33"	10"
18"	0.39"	12"
20"	0.39"	12"
24"	0.39"	12"
30"	0.46"	14"
36"	0.54"	14"
42"	0.57"	16"
48”	0.64"	16”
54”	0.64"	16”
60”	0.64"	16”

NOTES:
1. See Section 13230 for assembly tolerances.
2. Fill voids with resin putty as shown. Flare putty into a radius 1/4” min. to 3/8” max.
3. For header diameter 24" and larger, and where accessible, apply an internal overlay (MMC) 6"wide.

FRP TEE AND LATERAL JOINTS

DETAIL-6

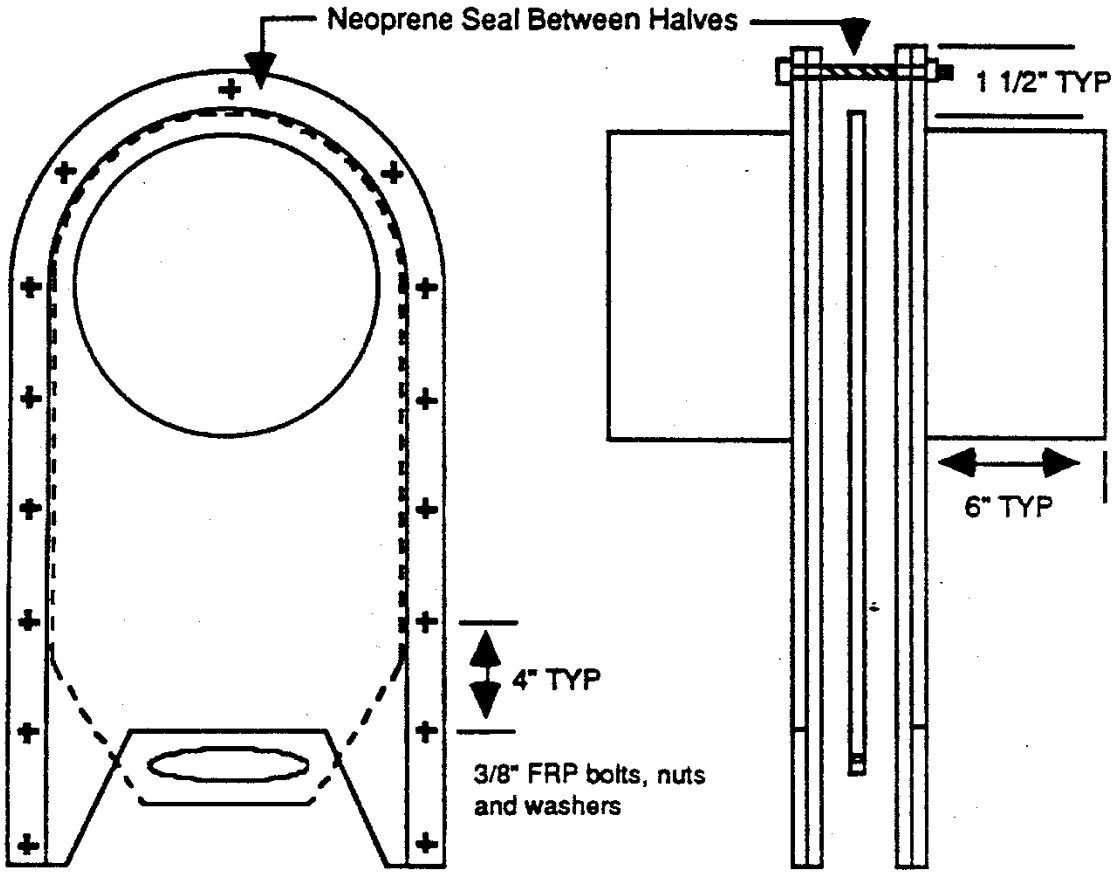

VINYLESTER RESIN
NEOPRENE SEALS

CONSTRUCTION	BLADE THKNESS	HOLE SIZE	BOLT SIZE
4” THRU 16”	.187	7/16”	3/8”
18” THRU 24”	.250	7/16”	3/8”
26” THRU 36”	.320	7/16”	3/8”
42” THRU 72”	.375	9/16”	1/2”

TYPICAL ROUND BLAST GATE
ALL FRP CONSTRUCTION

DETAIL-7

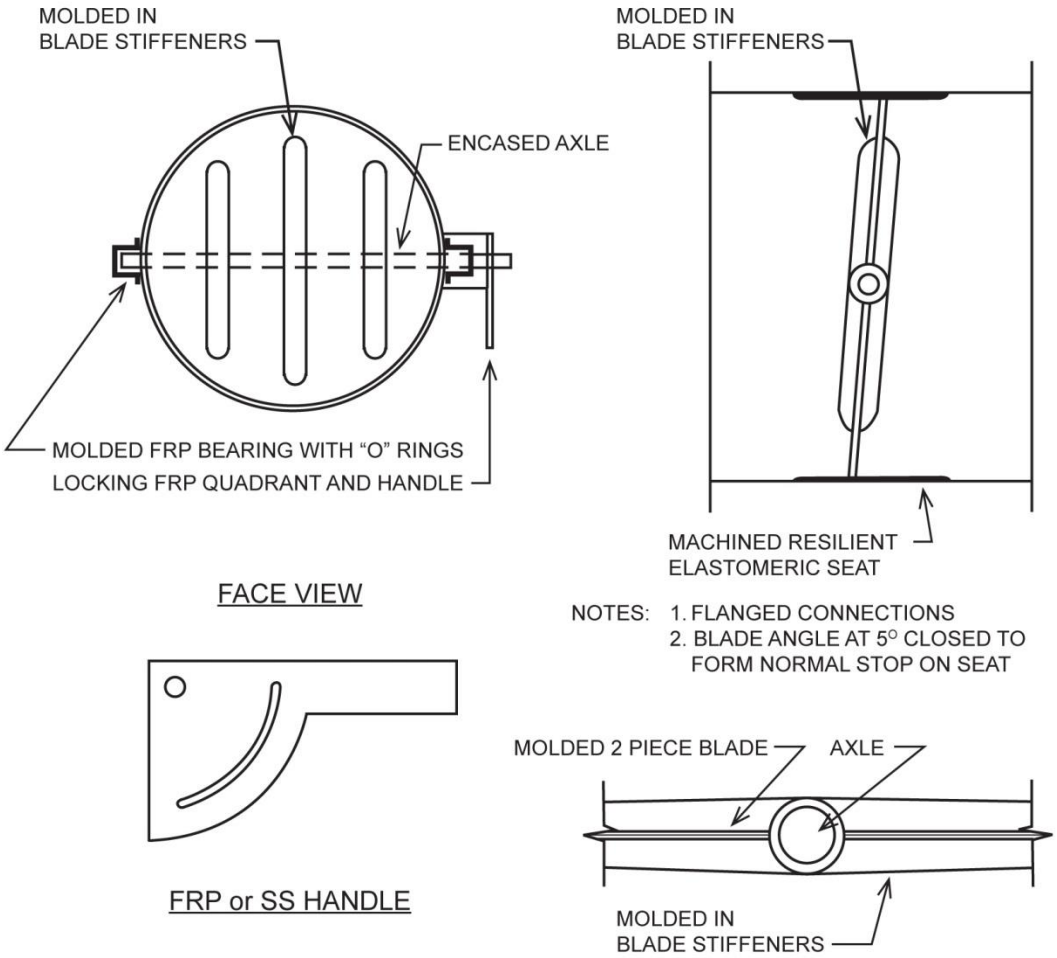

VITON OR EPDM SEAT

CONSTRUCTION	BLADE THKNESS	AXLE DIM	BLADE STIFFENERS
4" THRU 10"	.125	0.75	--
12" THRU 16"	.125	1.0	1
16" THRU 22"	.187	1.0	2
24" THRU 28"	.25	1.5	2
30" THRU 36"	.375	1.5	3

ZERO LEAK ROUND DAMPER

DETAIL-8

END OF SECTION

SECTION 13240

FIBERGLASS FLAT COVERS

PART 1--GENERAL

1.01 DESCRIPTION

This section specifies the design, fabrication and erection of substantially airtight, flat covers as indicated on the contract drawings. Cover panels shall have flat tops and be of fiberglass construction. All necessary supporting beams and trusses for support of the covers and mixing equipment required shall be of fiberglass construction. Cover system shall include all flashing and trim, fasteners, anchors, gaskets and sealant as required for a complete cover installation. Fiberglass covers are a bid alternate to the aluminum covers specified in Section 13120.

The cover shall possess an integral non-skid surface and no exposed area of cover system wider than one inch shall be without non-skid surface.

Interlocking panels shall be substantially weathertight and airtight incorporating a compatible neoprene gasket. The cover shall maintain an air intrusion leakage rate not to exceed 0.2 cfm per square foot at an applied negative pressure of 0.2 inch of water column for a 5-minute duration.

The maximum weight of any component shall not exceed 150 pounds.

Access shall be as indicated on the Drawings. Access hatch panels shall have identical properties as the rest of the cover including loads, deflection and slip resistance. While in the closed position, the panel shall lie flat on the cover. Handles shall be an integral flush mounted and incorporated into the non-skid deck slat.

Flat covers shall accommodate features such as slide gates, pipes, electrical conduits, electrical pullboxes, light poles, and instrumentation without leaving more than 1/2-inch clearance around the accommodated feature.

Access hatches shall be provided as shown on the drawings and at the following locations:

4. Adjacent to the vertical mixers. Size shall be coordinated with the mixer manufacture to remove the under cover components.
5. At the location of all under cover valves.
6. At the location of all under cover instruments.

In addition to the cover requirements noted above, there shall be 20 additional access hatches with nominal 2 ft. by 2 ft. dimensions provided. Hatch locations shall be selected by the Owner.

The requirements of Section 13230 – FRP Fabrications shall apply to all aspects of this specification section. For purposes of this section, references to design drawings, construction details, laminate sequences or laminate charts herein or contained in Section 13230 – FRP Fabrications shall be construed as references to the fabricator's approved design submittal as prepared per Paragraph 13240-1.04.

1.02 QUALITY ASSURANCE

Quality, as represented by raw materials used, manufacturing practices employed, and condition of the finished product, is of prime importance. Flat cover manufacturer must have a minimum of five (5) years history of successful installations of similar size and complexity. Knowledge of new technology in the interest of improved quality and/or lower cost is welcomed. However, any change of raw materials, alteration of construction, or other deviations from the requirements of the Specification sections or design drawings must be submitted in detail and approved in writing by the Engineer.

Reference standards for FRP Fabrications are included in Section 13230.

1.03 DESIGN STANDARDS

Design shall be in accordance with the Standard Building Code. Cover shall be designed for loads below or those of the prevailing building code, more stringent controlling. ASCE 7 Occupancy Category is III.

A. LIVE LOADS:

Basic Live Load equal to 20 psf although all components shall be designed to support a 400 pound load on a 12 inch square area located anywhere on the surface of the structure without permanently deforming the loaded area.

B. WIND LOADS:

The wind load shall be the load resulting from a minimum wind velocity of 90 mph. Exposure is C.

C. DEAD LOADS:

The dead load shall be as determined, although it shall not exceed 10 psf.

D. MIXER LOADS

The cover support structure shall be designed to support the vertical mixers installed at the biological basins and post anoxic basins. Cover manufacture shall coordinate with the mixer manufacturer for the required support loads and attachment requirements.

E. SURFACE REQUIREMENTS

The fiberglass covers shall be installed on the tanks such that the cover surface shall be flush with the top of the adjacent tank walls and operating platforms. All cover support structures shall be connected to the internal tank side walls at the biological basins. No structural or any other components shall rest on top of the tank walls except for an extension of the cover surface.

An exposed support structure can be used at the post anoxic tanks if required.

1.04 SUBMITTALS

The following submittals shall be provided:

1. Before executing any of the work in this section, the flat cover manufacturer shall submit calculations and drawings to the Engineer showing dimensions, sizes, thicknesses, gauges, materials, finishes, joint attachments and erection procedure, including erection bracing, and sequence of work. These calculations and drawings shall be sealed by a registered Professional Engineer registered and licensed in the state of Georgia.

2. The flat cover shall be fabricated and erected in accordance with the approved drawings.

3. Shop drawings shall be complete with all dimensions, anchor locations, details of connecting piping and the size and locations of any required openings, sealing and flashing systems, hatches, etc.

4. Details of the major fabricated components showing the arrangement of components and labeled with component sizes and materials of construction.

5. A copy of this specification section, with addendum updates included, and all referenced and applicable sections, with addendum updates included, with each paragraph check-marked to indicate specification compliance or marked to indicate requested deviations from specification requirements. Check marks (✓) shall denote full compliance with a paragraph as a whole. If deviations from the specifications are indicated, and therefore requested by the Contractor, each deviation shall be underlined and denoted by a number in the margin to the right of the identified paragraph, referenced to a detailed written explanation of the reasons for requesting the deviation. The Engineer shall be the final authority for determining acceptability of requested deviations. The remaining portions of the paragraph not underlined will signify compliance on the part of the Contractor with the specifications. Failure to include a copy of the marked-up specification sections, along with justification(s) for any requested deviations to the specification requirements, with the submittal shall be sufficient cause for rejection of the entire submittal with no further consideration.

1.05 MANUFACTURERS

Fiberglass flat covers shall be as manufactured by Enduro Systems, Inc.; Fiberglass Fabricators, Inc. or equal.

1.06 WARRANTY

A manufacturer's warranty shall be furnished for the cover system. The warranty shall provide, but not be limited to the following:

4. The warranty shall be issued directly to the Owner.

5. The warranty period shall be not less than 10 years from the date of acceptance of the work.

6. The warranty shall cover the overall performance of the flat cover and the certification that all materials have been installed in accordance with both the Contract Documents' drawings and specifications and the manufacturer's drawings and installations directions.

PART 2--PRODUCTS

2.01 MATERIALS

A. Fiberglass reinforced plastic (FRP) structural components including decking, beams, and framing shall be manufactured by the pultrusion process.

1. Glass fiber reinforcements shall be minimum 50% of the material weight.
2. Materials shall be fire retardant with flame spread rating of 25 or less per ASTM E84.
3. Materials shall exhibit these Physical Properties (minimum)

Tensile Strength	30,000 psi ASTM D 638
Compressive Strength	30,000 psi ASTM D 695
Flexural Strength	45,000 psi ASTM D 790
Flexural Modulus	1,690,000 psi ASTM D 790
Izod Impact (Notched)	25 ASTM D 256
Water Absorption	0.25% max ASTM D 570

4. Resin type for FRP tank cover decking shall be UV stabilized, isophthalic polyester.
5. Top of tank cover decking shall be flat and have a nonskid, UV resistant surface.
6. Color of deck panels shall be selected by the Owner from the standard colors available from the manufacture.

B. Hatches

1. Hatches shall be provided where shown on the drawings, as required for mixer installation and in accordance with the requirements specified herein. Hatches shall be fabricated from pultruded fiberglass components.
2. Hatches shall have a stainless steel, hold-open device.
3. Hatches shall be secured with hand-operable latches and without special tools.
4. Hatch lids shall have a non-skid, UV resistant surface with plastic or stainless steel lift handles.

C. Hardware

1. Fasteners, anchors, hinges, and other structural accessories located on the underside of cover shall be 316 Stainless Steel.
2. Perimeter flashing anchors, concrete anchors, or other hardware not exposed to the inside environment of tank shall be 304 Stainless Steel.

PART 3--EXECUTION

3.01 ERECTION

3. The contractor shall perform the work described herein with mechanics skilled and experienced in the fabrication and erection of flat cover structures. All field work shall be directed by a qualified supervisor who will remain on the job site until the cover construction is completed.

4. Field re-fabrication or welding of structural components or panels will not be accepted. Forcing the structure to achieve fit-up during construction is expressly forbidden and not acceptable.

3.02 AIR TIGHTNESS TEST

2. Upon completion of the installation, the contractor shall perform an air tightness test to verify conformance with the specifications.

END OF SECTION

SECTION 13282

RADIAL FLOW MIXED MEDIA ODOR TOWER

PART 1--GENERAL

1.01 DESCRIPTION

A. SCOPE:

This section specifies radial flow mixed media odor towers for foul air treatment.

The odor tower shall include: a fiberglass reinforced plastic (FRP) vessel, media supports, local instrumentation and controls to monitor the system, interconnecting ductwork, FRP fans, drainage piping with appropriate valves, an anchoring system, and any other ancillary equipment shown on the contract drawings and required for proper operation and dry media. All parts shall be constructed of materials suitable for the application.

B. TYPE:

Tanks provided under this section shall be vertical, cylindrical, filament wound construction.

C. EQUIPMENT LIST:

Item	Equipment No.
Headworks Odor Control Unit	ORT-2111
Membrane Area Odor Control Unit	ORT-2133

D. DESIGN REQUIREMENTS:

1. PHYSICAL CHARACTERISTICS: The FRP tanks provided under this section shall have an in-to-out configuration and shall have the following characteristics:

Equipment No.	Max. tank diameter, ft.	Max. tank height, ft.	Media capacity	Media depth	NEC Classification
			Carbon, Lb	Carbon, in.	
ORT-2111	14	20	1600	30	Class I , Div. 1
ORT-2133	13	17	1220	30	Unclassified

2. OPERATING CONDITIONS: FRP tank shall be designed for the following characteristics:

Equipment No.	Air flow, scfm	Pressure drop, inches of W.C., max.	Minimum empty bed contact time, seconds	Maximum face velocity at mid point of bed, ft./min.
OCU-2111	31,000	6.0	2.9	50
OCU-2133	23,000	6.0	2.9	50

E. VESSEL:

The adsorber canister shall be manufactured using filament wound FRP construction, in accordance Section 13230. It shall be designed to withstand a minimum loading of 15 inches water column of positive and 6 inches of negative (i.e. vacuum) pressure.

F. MEDIA:

Media shall be specifically manufactured for continuous exposure to moisture-laden foul air containing concentrations of hydrogen sulfide (H_2S) up to 10 parts per million, as well as other malodorous compounds of municipal sewage origin such as ammonia, organic sulfides, indols, skatols, aldehydes, and mercaptans. Foul air will have temperatures ranging from 40 to 95 degrees F and relative humidity up to 100 percent. Media shall be as specified in Section 13540.

G. TESTING AND PERFORMANCE:

The odor control system shall meet the following performance requirements when operating under the listed design flow conditions:

Activated Carbon Bed:

Inlet Contaminant	Inlet Concentration	Outlet
Hydrogen sulfide	1-10 ppm	0.1 ppm
	>10 ppm	99% of inlet
Methyl mercaptan	100-500 ppb	90% of inlet
Dimethyl sulfide	100-500 ppb	90% of inlet
Dimethyl disulfide	100-500 ppb	90% of inlet
Dilutions–to-threshold	1000-10,000	100

Hydrogen sulfide testing shall be conducted by a laboratory mutually selected and agreed upon by the supplier and the Project Representative.

1.02 QUALITY ASSURANCE

A. GENERAL:

Tanks shall be fabricated and assembled in strict compliance with the design drawings and specifications. Filament winding utilizing either a helical wind or a hoop wind in combination with weft unidirectional tape shall be the fabrication method. The inlet duct up to the first upstream flange and the outlet duct up to the first downstream damper shall be manufactured as part of the tank.

B. DESIGN REQUIREMENTS:

The fabricator shall perform all calculations necessary to ensure long-term, low risk service of the FRP equipment with minimum reasonable maintenance requirements. The design shall ensure proper functioning of the equipment at the stated operating conditions. The design shall include as a minimum, engineering calculations on the vessel stamped by a professional engineer, materials selection and documented physical and mechanical properties, and all detailed drawings required for fabrication and assembly of the equipment.

The design shall satisfy all applicable national, regional, and local design and building codes.

Detailed design of FRP tanks shall follow the procedures and methods, utilize the equations and formulas, and incorporate safety factors and allowable design stresses and strains set forth in ASME/ANSI RTP-1.

The design shall consider the interaction of the installed system including but not limited to; thermal expansion of duct, tanks and vessels and the effects of external loading from piping, fans, pumps, platforms, etc.

The design shall allow for the most severe combination of conditions which may include any or all of the following:

1. Internal or external pressure.
2. Static head of contents (working and test conditions).
3. Mass of structure and contents.
4. Design temperature including upset conditions.
5. Superimposed loads, such as seismic forces.
6. Bending moments due to eccentric loads.
7. Localized loads acting at supports, lugs, and other attachments.
8. Shock loads.
9. Loads due to heating or cooling and thermal gradients.
10. Loads applied during transport or erection.
11. Loads imposed by personnel during erection and operations.
12. Fatigue.
13. Specifically:
    a. Shell overturning due to wind/seismic:
        1) Critical buckling.

2) Design factor on tension side.

b. Anchoring, due to overturning or internal pressure:
   1) Lug design.
   2) Analysis of attachment to shell.
   3) Effect on shell knuckle.
   4) Maximum pullout forces and moments reported for the foundation design.

c. Appendage support:
   1) Effect of point loads on shells.
   2) Interaction between towers under any load.

d. Internal pressure or vacuum:
   1) Main shells, hoop and axial.
   2) Cutout reinforcements at nozzles.
   3) Effect on any discontinuities or special components (such as internal cone).

e. Thermal:
   1) Differential expansion at temperature extremes.
   2) Thermal gradient through laminate.

f. Special loads:
   1) Effect of agitators on nozzles.
   2) Dead or live loads on domes.
   3) Platforms.

14. There will typically be other aspects which should be considered. It is the responsibility of the fabricator to identify and consider their effects, and to provide this information for review.

The fabricator shall provide documentation for all laminate properties used in the design. Laminates shall be similar in construction, layer sequence, resin type and cure to those used to determine tested properties. All properties shall be adjusted to reflect any reductions at operating temperatures.

The corrosion liner shall be a minimum of 100 mils in thickness and documentation shall be provided by the fabricator verifying veil type, liner thickness, and resin cure. Fifty mils of the corrosion liner shall be considered sacrificial and not included in determining structural wall thickness. Structural wall thickness shall be determined in accordance with ASME/ANSI RTP-1 and shall not be less than 0.375-inch for tanks and vessels. The requirements of ASME/ANSI RTP-1 shall govern the design.

Laminate types may include hand lay-up, helical winding, and hoop/chop construction methods. In laminates with helix angles greater than 75 degrees and in all hoop/chop laminates, approximately 10 percent of the structural wall thickness shall be oriented at 0 degrees (longitudinal direction). This reinforcement shall be applied in two layers of weft unidirectional fabric and equally spaced within the structural wall.

Nozzles, gussets, access ways and shell reinforcements shall be determined according to the applicable text, tables and formulas in ASME/ANSI RTP-1.

Anchoring for tanks shall be accomplished using lugs and a continuous filament wound band or an integral filament wound load ledge with external anchor clips.

Internal beams and support attachments shall be designed using a maximum of 25 psi shear stress for secondary bonds. This shall also apply to design of external lugs required for ladders, platforms, etc.

C. FACTORY TESTING:

Testing of samples taken from the tanks' fabrication laminates shall be in accordance with Section 13230. Results of all tests shall be provided to the Project Representative.

1.03 REFERENCES

References are as described in paragraph 13230-1.04.

1.04 ENVIRONMENTAL CONDITIONS

The environmental conditions shall be as specified in Section 01800.

1.05 SUBMITTALS

In addition to the submittals required under Section 13230, the Contractor shall provide, prior to beginning fabrication, the following submittals in accordance with Section 01300

The following submittals shall be provided as specified in Section 01300:

1. A copy of this specification section, with addendum updates included, and all referenced and applicable sections, with addendum updates included, with each paragraph check-marked to indicate specification compliance or marked to indicate requested deviations from specification requirements. Check marks (✓) shall denote full compliance with a paragraph as a whole. If deviations from the specifications are indicated, and therefore requested by the Contractor, each deviation shall be underlined and denoted by a number in the margin to the right of the identified paragraph. The remaining portions of the paragraph not underlined will signify compliance on the part of the Contractor with the specifications. The submittal shall be accompanied by a detailed, written justification for each deviation. Failure to include a copy of the marked-up specification sections, along with justification(s) for any requested deviations to the specification requirements, with the submittal shall be sufficient cause for rejection of the entire submittal with no further consideration.

2 A copy of the contract document control diagrams and process and instrumentation diagrams and odor control mechanical drawings relating to the submitted equipment, with addendum updates that apply to the equipment in this section, marked to show specific changes necessary for the equipment proposed in the submittal. If no changes are required, the

drawing or drawings shall be marked *"no changes required"*. Failure to include copies of the relevant drawings with the submittal shall be cause for rejection of the entire submittal with no further review.

3. Complete design calculations for all tanks. Calculations shall be signed by a structural engineer registered in the State of Georgia, verifying that the tanks have been designed to meet all design criteria given in these specifications.

4. Complete information developed by the fabricator which describes specifically how the equipment is to be built. This would most likely be in the form of shop drawings, standards, specifications, or other shop instructions, but may also be partially contained in QC records. This should include but not be limited to:

   a. Resin type
   b. Type and amount of fillers
   c. Nominal corrosion liner description.
   d. Reinforcement types for hand lay-up laminates
   e. For filament wound laminates:
      1) Helix angle
      2) Glass content range
      3) Strand yield
      4) Strand per inch in the winding band.
      5) Ply thickness
      6) Amount of chop or unidirectional roving interspersed with winding, if any, and location within laminate.
   f. For all other components:
      1) Construction type.
      2) Laminate thicknesses
      3) Ply sequences
      4) Glass content range
   g. For all secondary overlays (both interior and exterior):
      1) Laminate thicknesses
      2) Ply sequences and widths
   h. Construction details for all assembly and other special configurations, including:
      1) Bottom/top attachments with knuckle configuration and overlays and thicknesses
      2) Support and anchor lugs, including attachment details.
      3) Nozzles and installation, including cutout reinforcement, gusseting, etc.
      4) Lateral or other support fabrication details, including ladder and platform attachment clips and/or shoulders
      5) Configuration and fabrication details of internals support system and other specialty items
      6) Vessel body flange
   i. For the media:

1) Manufacturer's catalog and/or other data confirming conformance to specified design, material and equipment requirements.
2) List of five references demonstrating 10 years successful supply of each type of dry media
3) A detailed description of the procedure for installation and commissioning of the dry media.
4) Detailed product information for each type of dry media proposed for the job, including verification of all properties specified, as well as total weight per bed

1.06 UNIT RESPONSIBILITY

The Contractor shall assign unit responsibility as specified in paragraph 11000-1.02 C. to the manufacturer for the equipment specified in this section, including, but not limited to the design, manufacturer, testing, and shipping of the complete system including fan, mist eliminator, hardware, provide all specified field testing and furnish operator training and related operations and maintenance manuals of the equipment as specified in this section.

1.07 EXPERIENCE

The manufacturer shall be regularly engaged in the design and manufacture of dry media odor reduction systems for municipal wastewater treatment plants and shall have a minimum of 5 years of experience in the design and fabrication of the dry media equipment. Experience shall be demonstrated by evidence of at least 3 radial dry media units utilized to remove H_2S from air streams with air flow at least 20,000 cfm at municipal wastewater treatment plants successfully operating. Reference list (including Owner‘s and Construction Manager’s contact addresses and telephone numbers) of at least three units shall be provided.

PART 2--PRODUCTS

2.01 ACCEPTABLE PRODUCTS

The Owner and Engineer believe the following manufacturers are capable of producing equipment and/or products that will satisfy the requirements of this Section. This statement, however, shall not be construed as an endorsement of a particular manufacturer’s product, nor shall it be construed that a named manufacturer’s standard product will comply with the requirements of this Section. Manufacturer shall be ECS, Daniel Company, Siemens, Calgon Carbon, Pure Air, Purafil or approved equal.

2.02 FABRICATION

Fabrication of the FRP tanks shall be in accordance with Section 13230 and the following:

1. Reinforcement surfacing veil, as described in Section 13230, shall be C-glass surfacing veil.

2. Interior layers of glass mat, as described in Section 13230, shall consist of three layers of 1-1/2 ounces per square foot glass mat.

3. For all laminates, the corrosion resistant liner, as described in A and B, above, shall be followed by a filament wound structural laminate applied in accordance with Section 13230.

4. All exterior surfaces shall be resin rich and reinforced with one layer of C-glass surfacing veil.

5. Laminate sequences and thicknesses, as specified, shall be maintained.

6. The tanks shall be shop assembled to assure proper fit. Subassemblies shall be numbered and mating flanges or elements shall be match marked to assure correct alignment and correct field assembly.

7. Minimum corrosion liner thickness shall be 0.100-inch. Excess liner thickness shall be added to total wall thickness, but shall not conflict with tolerance requirements.

8. Filament winding angle shall be 60 degrees ±5 degrees.

9. The resin to be used shall be Derakane 510, AOC K022, or equal, if approved by the Engineer. Antimony trioxide shall not be used in the corrosion liner.

10. Pigments shall not be used in the inner lamina. However, a pigmented surface coat shall be applied to the exterior surface of the tanks in accordance with Section 13230. The color shall be as selected by the Construction Manager.

2.03 MEDIA SUPPORT SYSTEM

Media support system shall consist of two perforated vertical columns. These columns shall be manufactured from 316L stainless steel or the same FRP system as specified in the vessel construction. Column shall have carbon retention screen intermeshed so that it can not be disturbed during carbon placement or removal. The retention screen should be contained on either side by the column matrix. Columns shall each have an independent bottom section so that they can be completely removed in one piece through the vessel body flange.

2.04 CUT-WALLS

Cut-walls shall be reinforced as required by ASTM D-3299, PS 15-69 and ASME RTP-1. All exposed edges shall be coated with vinyl ester resin to prevent corrosion

2.05 DAMPERS

The system shall have a flanged inlet and discharge connections. The top connection shall include a seal on top of the media bed and shall eliminate bypassing and short circuiting. A damper shall be installed as shown on the contract drawings. The damper shall be 316 SS or FRP to that of the vessel. The damper shall be capable of locking in place at any position. The damper shall have no more than 1% leakage at the maximum discharge fan pressure in the fully closed position. Dampers shall conform to the requirements of Section 13234.

2.06 TANK FITTINGS

Fittings shall be provided as shown on drawings. All fittings shall be ANSI 150# flanges.

2.07 METAL APPURTENANCES

All wires, anchor lugs, bolts, and fasteners shall be AISI type 316 stainless steel.

2.08 GASKETS

Unless specified otherwise, gaskets shall be neoprene.

2.09 AIR SAMPLE PORTS

The system shall be provided with an air sampling port connected to the interface at the carbon and the dry media beds.

The system shall have a hydrogen sulfide monitor capable of visual detection of hydrogen sulfide breakthrough. The system shall be mounted on the exhaust duct on the vessel. The monitor shall have replaceable tubes

2.10 MEDIA SAMPLE PORTS

The media layers shall be provided with three 1-1/2-inch diameter sample ports extending 6 inches into the vessel. Ports shall be seated with a full port ball valve. Probe and valve shall be CPVC. Ports shall be equal distance apart at the top and bottom and mid depth.

2.11 DRAIN

System shall have a ¼” per vessel diameter foot sloped bottom to drain to allow for complete drainage of liquid due to condensation. Drain shall be 3 inch FNPT with PPL ball valve.

2.12 GROUNDING

A grounding rod shall be provided for grounding at base of vessel.

2.13 DRY MEDIA

The media utilized by the reactor vessel shall be provided by the system supplier and supplied separately to be installed by the contractor after vessel installation. The activated carbon media shall be as specified in Section 13540. The media for both units (OCU-2111) and (OCU-2133) shall be high capacity activated carbon.

The carbon media shall not be considered a hazardous material after use and shall be able to be disposed of in any landfill.

2.14 ACCESSORIES

The system shall be equipped with a differential pressure gauge Dwyer Series 2000 Magnehelic.

The system shall have a hydrogen sulfide monitor capable of visual detection of hydrogen sulfide breakthrough. The system shall be mounted on the exhaust duct on the adsorber canister. The monitor shall have replaceable tubes that can be modified for other compound detection.

2.15 GREASE FILTER/MIST ELIMINATOR

Grease filter mist eliminator shall be provided as specified in Section 15889.

2.16 VARIABLE FREQUENCY DRIVE:

Variable frequency drives for fans will be provided by electrical per specification 11069. The odor control equipment shall coordinate the electrical requirements with the VFD supplier.

2.17 FAN

Fiberglass reinforced plastic (FRP) fan shall be provided as specified in Section 15828.

2.18 PRODUCT DATA

The following product data shall be provided in accordance with Section 01340:

1. Signed affidavit by the tank manufacturer indicating that the tank was successfully factory tested.

2. Statement by the tank manufacturer that the tank material meets the test properties specified.

3. Applicable operating and maintenance information specified in Section 01730.

PART 3--EXECUTION

3.01 INSPECTION

Inspection of all tanks, including examination of laminate cutouts and specimens, shall be performed by the Engineer. The Contractor shall notify the Engineer 72 hours in advance of the occurrence of the following tank construction milestones:

1. Extraction of each shell section, prior to beginning assembly work.
2. Assembly completion, prior to shipment.

Laminate defects and their allowable limits and tolerances shall be in accordance with Section 13230. Minimum acceptable hardness of all FRP laminates shall be 36 when tested in accordance with Section 13230. Surfaces shall also be tested for acetone sensitivity as an indication of air inhibition. Air-inhibited surfaces are not allowed.

All welded thermoplastic seams shall be subjected to a non-destructive AC spark test in accordance with manufacturer's recommendations.

3.02 INSTALLATION

The tanks shall be installed as shown and in accordance with the manufacturer's written instructions. Each tank shall rest on a level, even base of concrete so that the entire bottom of the tank is supported.

3.03 FIELD TESTING

Prior to filling with media, the tanks shall be hydraulically field tested by filling the entire tank with water and monitoring the tanks as well as all fitting connections for at least 24 hours. Any leaks shall be corrected by the manufacturer's representative prior to acceptance. Following successful field tank testing, the tanks shall be completely emptied and dried. Field testing shall be in accordance with the requirements specified in Division 1.

Following hydraulic testing, the tanks shall be connected to the ductwork system and air tested under maximum fan pressure. Tanks shall be monitored for air leaks. Any leaks shall be corrected prior to acceptance.

3.04 INSTALLATION OF MEDIA

The Construction Manager shall be notified two weeks prior to the time planned for installing the media. Quantities of each type of media be provided, and a desired delivery date and time arranged.

Arrange with the Construction Manager at least one week in advance for a representative of the Construction Manager to be on site when the media is installed. The representative will be familiar with vessel maintenance procedures and shall inspect each lift of media as it is installed.

Media shall be evenly spread and compacted. Special care shall be taken to insure there are no voids or opportunities for short circuiting. Media shall be placed and leveled in lifts not exceeding one foot in depth.

Contractor shall consult supplier about fire hazards of media during placement and shall take appropriate precaution.

3.05 MANUFACTURER'S WARRANTY

The Contractor shall procure and provide copies of the certified manufacturer's warranty in accordance with Section 11000. The manufacturer having unit responsibility shall warrant that the complete system, including accessories and components, shall be free from defects in materials for a period of one year after startup. Warranty shall include pressure drop and contaminant reduction performance.

END OF SECTION

SECTION 13540

ACTIVATED CARBON
PART 1--GENERAL

1.01 DESCRIPTION

A. SCOPE:

This section specifies activated carbon for odor reduction.

B. UNIT RESPONSIBILITY:

The Contractor shall assign unit responsibility as specified in paragraph 11000-1.02 C to the activated carbon supplier for provision of new activated carbon as specified herein.

C. TYPE:

Virgin activated carbon shall be non-impregnated, high surface area, tightly packed granular or pelletized type, specifically manufactured to absorb vapor phase organic and malodorous compounds of the type typically generated from municipal wastewater. Activated carbon shall be suitable for regeneration upon return to the supplier. Supplier of activated carbon shall be experienced in the supply and operation of activated carbon systems for vapor phase organic and hydrogen sulfide removal at wastewater treatment facilities.

1.02 QUALITY ASSURANCE

A. GENERAL:

Activated carbon shall be specifically manufactured for continuous exposure to moisture-laden foul air containing concentrations of hydrogen sulfide up to 10 parts per million, as well as other malodorous compounds of municipal sewage origin such as ammonia, organic sulfides, indols, skatols, aldehydes, and mercaptans. Foul air will have temperatures ranging from 40 to 95 degrees F and relative humidity up to 100 percent.

B. OPERATING CONDITIONS:

Air flow, cfm	See Section 13282
Maximum temperature in vessel, degrees F	95
Maximum face velocity in bed, fpm	50
Minimum empty bed detention time, sec	3.6
Bed thickness, ft	3.0
Maximum H_2S outlet at <1ppm inlet, ppm	0.05
Maximum H_2S outlet at 1-10 ppm inlet, ppm	0.1
Minimum H_2S removal at >10 ppm inlet, percent	99
Minimum organic sulfide removal	

1.03 ENVIRONMENTAL CONDITIONS

Environmental conditions are specified in Section 01800.

1.04 SUBMITTALS

The following submittals shall be provided in accordance with Section 01300:

1. A copy of this specification section, with addendum updates included, and all referenced and applicable sections, with addendum updates included, with each paragraph check-marked to indicate specification compliance or marked to indicate requested deviations from specification requirements. A check mark shall denote full compliance with a paragraph as a whole. If deviations from the specifications are indicated, and therefore requested by the Contractor, each deviation shall be underlined and denoted by a number in the margin to the right of the identified paragraph, referenced to a detailed written explanation of the reasons for requesting the deviation. The Construction Manager shall be the final authority for determining acceptability of requested deviations. The remaining portions of the paragraph not underlined will signify compliance on the part of the Contractor with the specifications. *Failure to include a copy of the marked-up specification sections, along with justification(s) for any requested deviations to the specification requirements, with the submittal shall be sufficient cause for rejection of the entire submittal with no further consideration.*

2. Completed Certificate of Unit Responsibility attesting that the Contractor has assigned, and that the manufacturer accepts, unit responsibility in accordance with the requirements of this Section and paragraph 11000-1.02 C. *No other submittal material will be reviewed until the certificate has been received and found to be in conformance with these requirements.*

3. Detailed product information for the activated carbon proposed for the job, including verification of all properties specified in paragraph 13540-2.02, as well as total weight per bed.

4. Certified weights of the water-saturated carbon beds.

PART 2--PRODUCTS

2.01 MANUFACTURERS

The Owner and Construction Manager believe the following candidate manufacturers are capable of producing equipment and/or products that will satisfy the requirements of this Section. This statement, however, shall not be construed as an endorsement of a particular manufacturer's products, nor shall it be construed that named manufacturers' standard equipment or products will comply with the requirements of this Section. Candidate manufacturers include Calgon Carbon Corporation, Siemens/Weststates, Norit, Purafil, Pure Air, or equal.

2.02 MATERIALS

HIGH CAPACITY CARBON

Substrate	Pelletized bituminous coal
Butane activity, percent by weight minimum	26
Mean pellet diameter, millimeters (per ASTM D2862)	4.0
Iodine number, mg/g minimum	1,050
Hardness number minimum (per ASTM D3802)	95
Apparent density, minimum gms/cc (per ASTM D2854)	0.46 – 0.52
Maximum head loss through dense-packed bed at 50 fpm velocity, inches w.c./ft bed depth (a)	1.25
H_2S breakthrough capacity minimum, gms H_2S removal/cc carbon (b)	0.30

Notes:

a. Head loss shall be determined by passing dry air at 70 degrees F and 1 atm. pressure through a 2-inch diameter by 12-inch deep bed of carbon placed in a dense packed arrangement per ASTM D2854.

b. The determination of H_2S breakthrough capacity shall be made by passing a moist (70 percent RH) air stream containing 1 percent H_2S at 1,450 cubic centimeters per minute flow through a test bed of uniformly packed activated carbon of the following dimensions: depth--9 inches, diameter--0.725 to 1.0 inch. The test shall be monitored to a 10 ppm breakthrough and the results expressed in gms H_2S removal/gm carbon which is calculated from the carbon sample weight uncorrected for moisture.

2.03 PRODUCT DATA

The following product data shall be provided in accordance with Section 01300:

1. A detailed description of the procedure for installation and commissioning of the activated carbon.

PART 3--EXECUTION

3.01 INSTALLATION

The carbon shall be installed in strict accordance with manufacturer's recommendations. Each bed shall be packed uniformly to the density specified with sample probes installed as shown. The packed bed shall contain no void pockets including bed areas around the sampling probes and near the vessel walls. Each bed shall have a smooth surface with uniform bed depth throughout.

3.02 COMMISSIONING

The commissioning period shall be carried out under the supervision of the manufacturer's representative and shall be continuous for a minimum of 3 days.

3.03 PERFORMANCE TEST

After completion of the commissioning period, each activated carbon bed shall be subjected to a performance test. The performance test shall extend for one year. During this year, the manufacturer shall supply a quarterly analysis of the activated carbon to be reported as hydrogen sulfide capacity. The manufacturer shall furnish the sufficient number of containers to accommodate the three sampling levels in each compartment of each activated carbon bed, as shown. The manufacturer shall also furnish instructions for sampling and disposition.

END OF SECTION

SECTION 13911

IDENTIFICATION FOR FIRE-SUPPRESSION PIPING AND EQUIPMENT

PART 1—GENERAL

1.01 SUMMARY

This section includes:

1. Equipment labels.
2. Warning signs and labels.
3. Pipe labels.

1.02 ACTION SUBMITTALS

A. PRODUCT DATA:

For each type of product.

B. EQUIPMENT-LABEL SCHEDULE:

Include a listing of all equipment to be labeled and the proposed content for each label.

C. BUY AMERICA REQUIREMENTS:

Provide “Certificate of Compliance with Buy America Requirements” in accordance with Federal Regulation 49 CFR 661.

1. Listing as an acceptable manufacturer shall not relieve the contractor from compliance with this requirement.

PART 2—PRODUCTS

2.01 EQUIPMENT LABELS

A. METAL LABELS FOR EQUIPMENT:

1. Material and Thickness: aluminum, 0.032 inch (0.8 mm) or anodized aluminum, 0.032 inch (0.8 mm) thick, with predrilled holes for attachment hardware.

2. Minimum Label Size: Length and width vary for required label content, but not less than 2-1/2 by 3/4 inch (64 by 19 mm).

3. Minimum Letter Size: 1/4 inch (6.4 mm) for name of units if viewing distance is less than 24 inches (600 mm), 1/2 inch (13 mm) for viewing distances up to 72 inches (1830 mm), and proportionately larger lettering for greater viewing distances. Include secondary lettering two-thirds to three-fourths the size of principal lettering.

4. Fasteners: Stainless-steel rivets or self-tapping screws.

5. Adhesive: Contact-type permanent adhesive, compatible with label and with substrate.

B. LABEL CONTENT:

Include equipment's Drawing designation or unique equipment number, Drawing numbers where equipment is indicated (plans, details, and schedules), and the Specification Section number and title where equipment is specified.

C. EQUIPMENT-LABEL SCHEDULE:

For each item of equipment to be labeled, on 8-1/2-by-11-inch (A4) bond paper. Tabulate equipment identification number and identify Drawing numbers where equipment is indicated (plans, details, and schedules) and the Specification Section number and title where equipment is specified. Equipment schedule shall be included in operation and maintenance data.

2.02 WARNING SIGNS AND LABELS

1. Material and Thickness: Multilayer, multicolor, plastic labels for mechanical engraving, 1/16 inch (1.6 mm) 1/8 inch (3.2 mm) thick, with predrilled holes for attachment hardware.

2. Letter Color: Red.

3. Background Color: White.

4. Minimum Label Size: Length and width vary for required label content, but not less than 2-1/2 by 3/4 inch (64 by 19 mm).

5. Minimum Letter Size: 1/4 inch (6.4 mm) for name of units if viewing distance is less than 24 inches (600 mm), 1/2 inch (13 mm) for viewing distances up to 72 inches (1830 mm), and proportionately larger lettering for greater viewing distances. Include secondary lettering two-thirds to three-fourths the size of principal lettering.

6. Fasteners: Stainless-steel rivets or self-tapping screws.

7. Adhesive: Contact-type permanent adhesive, compatible with label and with substrate.

8. Label Content: Include caution and warning information, plus emergency notification instructions.

2.03 PIPE LABELS

1. General Requirements for Manufactured Pipe Labels: Preprinted, color-coded, with lettering indicating service and showing flow direction.

2. Pre-tensioned Pipe Labels: Pre-coiled, semi-rigid plastic formed to cover full circumference of pipe and to attach to pipe without fasteners or adhesive.

3. Self-Adhesive Pipe Labels: Printed plastic with contact-type, permanent-adhesive backing.

4. Pipe-Label Contents: Include identification of piping service using same designations or abbreviations as used on Drawings; pipe size; and an arrow indicating flow direction.

    a. Flow-Direction Arrows: Integral with piping-system service lettering to accommodate both directions, or as separate unit on each pipe label to indicate flow direction.

    b. Lettering Size: At least 1-1/2 inches (38 mm) high.

PART 3—EXECUTION

3.01 PREPARATION

Clean piping and equipment surfaces of substances that could impair bond of identification devices, including dirt, oil, grease, release agents, and incompatible primers, paints, and encapsulants.

3.02 LABEL INSTALLATION

1. Coordinate installation of identifying devices with completion of covering and painting of surfaces where devices are to be applied.

2. Coordinate installation of identifying devices with locations of access panels and doors.

3. Install or permanently fasten labels on each major item of mechanical equipment.

4. Locate equipment labels where accessible and visible.

5. Piping Color-Coding: Painting of piping is specified in Section 09900 "Coating Systems.

6. Pipe-Label Locations: Locate pipe labels where piping is exposed or above accessible ceilings in finished spaces; machine rooms; accessible maintenance spaces such as shafts, tunnels, and plenums; and exterior exposed locations as follows:

   a. Near each valve and control device.

   b. Near each branch connection excluding short takeoffs. Where flow pattern is not obvious, mark each pipe at branch.

   c. Near penetrations through walls, floors, ceilings, and inaccessible enclosures.

   d. At access doors, manholes, and similar access points that permit view of concealed piping.

   e. Near major equipment items and other points of origination and termination.

   f. Spaced at maximum intervals of 50 feet (15 m) along each run. Reduce intervals to 25 feet (7.6 m) in areas of congested piping and equipment.

   g. On piping above removable acoustical ceilings. Omit intermediately spaced labels.

END OF SECTION

SECTION 13915

WET PIPE SPRINKLER SYSTEMS

PART 1—GENERAL

1.01 WORK INCLUDED

This section includes:

1. Pipes, fittings, and specialties.
2. Fire-protection valves.
3. Sprinklers.
4. Alarm devices.
5. Pressure gages.

1.02 SYSTEM DESCRIPTIONS

A. WET-PIPE SPRINKLER SYSTEM:

Automatic sprinkler system with piping, alarm valve, retard chamber, water motor gong, fire department connection, alarm valve trim, test valves, etc. Both pendent and upright fusible sprinklers will be used. See the Fire Sprinkler System schedule and details on the drawings.

1.03 PERFORMANCE REQUIREMENTS

A. WORKING PRESSURE: PIPING SYSTEM COMPONENT:

Listed for 175-psig (1200-kPa) minimum working pressure for Fire Sprinkler System Service per NFPA 13.6.1.3.

B. DELEGATED DESIGN:

Design sprinkler system(s), including comprehensive engineering analysis by a qualified professional, using performance requirements and design criteria as scheduled on the drawings and stated in this specification section(13-915).

Sprinkler system design shall be approved by authorities having jurisdiction.

1. Maximum Protection Area per Sprinkler: (As Scheduled on the drawings) Per NFPA 13.8.5.2.2 and UL listing.

C. SEISMIC PERFORMANCE:

Sprinkler piping shall withstand the effects of earthquake motions determined according to NFPA 13.9.3. ; the International Building Code 1613-1623 and International Fire Code.

1.04 SUBMITTALS

A. PRODUCT DATA:

For each type of product indicated.

B. SHOP DRAWINGS:

For wet-pipe sprinkler systems. Include plans, elevations, sections, details, and attachments to other work.

1. Retain subparagraph below if equipment includes wiring.
2. Wiring Diagrams: For power, signal, and control wiring.

C. DELEGATED-DESIGN SUBMITTAL:

For sprinkler systems indicated to comply with performance requirements and design criteria, including analysis data signed and sealed by the qualified professional engineer responsible for their preparation.

D. QUALIFICATION DATA:

For qualified Installer and professional engineer.

E. APPROVED SPRINKLER PIPING DRAWINGS:

Working plans, prepared according to NFPA 13, that have been approved by authorities having jurisdiction, including hydraulic calculations if applicable.

F. WELDING CERTIFICATES.

G. FIELD TEST REPORTS AND CERTIFICATES:

Indicate and interpret test results for compliance with performance requirements and as described in NFPA 13. Include "Contractor's Material and Test Certificate for Aboveground Piping."

H. FIELD QUALITY-CONTROL REPORTS.

I. OPERATION AND MAINTENANCE DATA.

J. BUY AMERICA REQUIREMENTS:

Provide “Certificate of Compliance with Buy America Requirements” in accordance with Federal Regulation 49 CFR 661.

1. Listing as an acceptable manufacturer shall not relieve the contractor from compliance with this requirement.

1.05 QUALITY ASSURANCE

A. INSTALLER QUALIFICATIONS:

1. Installer's responsibilities include designing, fabricating, and installing sprinkler systems and providing professional engineering services needed to assume engineering responsibility. Base calculations on results of fire-hydrant flow test.

2. Engineering Responsibility: Preparation of working plans, calculations, and field test reports by a qualified professional engineer.

B. WELDING QUALIFICATIONS:

Qualify procedures and operators according to ASME Boiler and Pressure Vessel Code AND NFPA 13.6.5.2.

C. ELECTRICAL COMPONENTS, DEVICES, AND ACCESSORIES:

Listed and labeled as defined in NFPA 70, by a qualified testing agency, and marked for intended location and application.

D. NFPA STANDARDS:

Sprinkler system equipment, specialties, accessories, installation, and testing shall comply with the following:

1. NFPA 13, "Installation of Sprinkler Systems."

PART 2—PRODUCTS

2.01 PIPING MATERIALS

Comply with requirements in "Piping Schedule" Article for applications of pipe, tube, and fitting materials, and for joining methods for specific services, service locations, and pipe sizes.

2.02 STEEL PIPE AND FITTINGS

1. Standard Weight, Galvanized-Black Steel Pipe: ASTM A 53/A 53M, Type E, Grade B. Pipe ends may be factory or field formed to match joining method.

2. Schedule 30, Galvanized-Black Steel Pipe: ASTM A 135; ASTM A 795/A 795M, Type E; or ASME B36.10M, wrought steel; with wall thickness not less than Schedule 30 and not more than Schedule 40. Pipe ends may be factory or field formed to match joining method.

3. Thin wall Galvanized and Black Steel Pipe: ASTM A 135 or ASTM A 795/A 795M, threadable, with wall thickness less than Schedule 30 and equal to or greater than Schedule 10. Pipe ends may be factory or field formed to match joining method.

4. Galvanized and Black-Steel Pipe Nipples: ASTM A 733, made of ASTM A 53/A 53M, standard-weight, seamless steel pipe with threaded ends.

5. Galvanized and Uncoated, Steel Couplings: ASTM A 865, threaded.

6. Galvanized and Uncoated, Gray-Iron Threaded Fittings: ASME B16.4, Class 125, standard pattern.

7. Malleable- or Ductile-Iron Unions: UL 860.

8. Cast-Iron Flanges: ASME 16.1, Class 125.

9. Steel Flanges and Flanged Fittings: ASME B16.5, Class 150.

10. Steel Welding Fittings: ASTM A 234/A 234M and ASME B16.9.

11. Grooved-Joint, Steel-Pipe Appurtenances:

a. Manufacturers: Subject to compliance with requirements, provide products by one of the following:

1) Anvil International, Inc.
2) Corcoran Piping System Co.
3) National Fittings, Inc.
4) Tyco Fire & Building Products LP.
5) Victaulic Company.

b. Pressure Rating: 175 psig(1200 kPa) minimum.

c. Galvanized and Uncoated, Grooved-End Fittings for Steel Piping: ASTM A 47/A 47M, malleable-iron casting or ASTM A 536, ductile-iron casting; with dimensions matching steel pipe.

d. Grooved-End-Pipe Couplings for Steel Piping: AWWA C606 and UL 213, rigid pattern, unless otherwise indicated, for steel-pipe dimensions. Include ferrous housing sections, EPDM-rubber gasket, and bolts and nuts.

12. Steel Pressure-Seal Fittings: UL 213, FM-approved, 175-psig (1200-kPa) pressure rating with steel housing, rubber O-rings, and pipe stop; for use with fitting manufacturers' pressure-seal tools.

a. Manufacturers: Subject to compliance with requirements, available manufacturers offering products that may be incorporated into the Work include, but are not limited to, the following:

1) Victaulic Company.

2.03 PIPING JOINING MATERIALS

A. Pipe-Flange Gasket Materials: AWWA C110, rubber, flat face, 1/8 inch (3.2 mm) thick or ASME B16.21, nonmetallic and asbestos free.

1. Class 125, Cast-Iron Flat-Face Flanges: Full-face gaskets.

B. Metal, Pipe-Flange Bolts and Nuts: ASME B18.2.1, carbon steel unless otherwise indicated.

C. Welding Filler Metals: Comply with AWS D10.12M/D10.12 for welding materials appropriate for wall thickness and chemical analysis of steel pipe being welded.

2.4 LISTED FIRE-PROTECTION VALVES

A. General Requirements:

1. Valves shall be UL listed or FM approved.

2. Minimum Pressure Rating: 175 psig (1200 kPa).

B. Check Valves:

1. Manufacturers: Subject to compliance with requirements, available manufacturers offering products that may be incorporated into the Work include, but are not limited to, the following:

2. Basis-of-Design Product: Subject to compliance with requirements, provide product indicated on Drawings or comparable product by one of the following:

a. AFAC Inc.

b. American Cast Iron Pipe Company; Waterous Company Subsidiary.

c. Anvil International, Inc.

d. Clow Valve Company; a division of McWane, Inc.

e. Crane Co.; Crane Valve Group; Crane Valves.

f. Crane Co.; Crane Valve Group; Jenkins Valves.

g. Crane Co.; Crane Valve Group; Stockham Division.

h. Fire-End & Croker Corporation.

i. Fire Protection Products, Inc.

j. Fivalco Inc.

k. Globe Fire Sprinkler Corporation.

l. Groeniger & Company.

m. Kennedy Valve; a division of McWane, Inc.

n. Matco-Norca.

o. Metraflex, Inc.

p. Milwaukee Valve Company.

q. Mueller Co.; Water Products Division.

r. NIBCO INC.

s. Potter Roemer.

t. Reliable Automatic Sprinkler Co., Inc.

u. Shurjoint Piping Products.

v. Tyco Fire & Building Products LP.

w. United Brass Works, Inc.

x. Venus Fire Protection Ltd.

y. Victaulic Company.

z. Viking Corporation.

aa. Watts Water Technologies, Inc.

3. Standard: UL 312.

4. Pressure Rating: 250 psig (1725 kPa) minimum.

5. Type: Swing check.

6. Body Material: Cast iron.

7. End Connections: Flanged or grooved.

C. Bronze OS&Y Gate Valves:

1. Manufacturers: Subject to compliance with requirements, available manufacturers offering products that may be incorporated into the Work include, but are not limited to, the following:

2. Basis-of-Design Product: Subject to compliance with requirements, provide product indicated on Drawings or comparable product by one of the following:

a. Crane Co.; Crane Valve Group; Crane Valves.

b. Crane Co.; Crane Valve Group; Stockham Division.

c. Milwaukee Valve Company.

d. NIBCO INC.

e. United Brass Works, Inc.

3. Standard: UL 262.

4. Pressure Rating: 175 psig (1200 kPa).

5. Body Material: Bronze.

6. End Connections: Threaded.

D. Iron OS&Y Gate Valves:

1. Manufacturers: Subject to compliance with requirements, available manufacturers offering products that may be incorporated into the Work include, but are not limited to, the following:

2. Basis-of-Design Product: Subject to compliance with requirements, provide product indicated on Drawings or comparable product by one of the following:

a. American Cast Iron Pipe Company; Waterous Company Subsidiary.

b. American Valve, Inc.

c. Clow Valve Company; a division of McWane, Inc.

d. Crane Co.; Crane Valve Group; Crane Valves.

e. Crane Co.; Crane Valve Group; Jenkins Valves.

f. Crane Co.; Crane Valve Group; Stockham Division.

g. Hammond Valve.

h. Milwaukee Valve Company.

i. Mueller Co.; Water Products Division.

j. NIBCO INC.

k. Shurjoint Piping Products.

l. United Brass Works, Inc.

m. Watts Water Technologies, Inc.

3. Standard: UL 262.

4. Pressure Rating: 250 psig (1725 kPa) minimum.

5. Body Material: Cast or ductile iron.

6. End Connections: Flanged or grooved.

E. Indicating-Type Butterfly Valves:

1. Manufacturers: Subject to compliance with requirements, available manufacturers offering products that may be incorporated into the Work include, but are not limited to, the following:

2. Basis-of-Design Product: Subject to compliance with requirements, provide product indicated on Drawings or comparable product by one of the following:

a. Anvil International, Inc.

b. Fivalco Inc.

c. Global Safety Products, Inc.

d. Kennedy Valve; a division of McWane, Inc.

e. Milwaukee Valve Company.

f. NIBCO INC.

g. Shurjoint Piping Products.

h. Victaulic Company.

3. Standard: UL 1091.

4. Pressure Rating: 175 psig (1200 kPa) minimum.

5. Valves NPS 2 (DN 50) and Smaller:

a. Valve Type: Ball or butterfly.

b. Body Material: Bronze.

c. End Connections: Threaded.

6. Valves NPS 2-1/2 (DN 65) and Larger:

a. Valve Type: Butterfly.

b. Body Material: Cast or ductile iron.

c. End Connections: Flanged, grooved, or wafer.

7. Valve Operation: Integral electrical, 115-V ac, prewired, two-circuit, supervisory switch indicating device.

2.5 TRIM AND DRAIN VALVES

A. General Requirements:

1. Standard: UL's "Fire Protection Equipment Directory" listing or "Approval Guide," published by FM Global, listing.

2. Minimum Pressure Rating: 175 psig (1200 kPa).

B. Ball Valves:

1. Manufacturers: Subject to compliance with requirements, available manufacturers offering products that may be incorporated into the Work include, but are not limited to, the following:

a. Affiliated Distributors.

b. Anvil International, Inc.

c. Barnett.

d. Conbraco Industries, Inc.; Apollo Valves.

e. Fire-End & Croker Corporation.

f. Fire Protection Products, Inc.

g. Flowserve.

h. FNW.

i. Jomar International, Ltd.

j. Kennedy Valve; a division of McWane, Inc.

k. Kitz Corporation.

l. Legend Valve.

m. Metso Automation USA Inc.

n. Milwaukee Valve Company.

o. NIBCO INC.

p. Potter Roemer.

q. Red-White Valve Corporation.

r. Southern Manufacturing Group.

s. Stewart, M. A. and Sons Ltd.

t. Tyco Fire & Building Products LP.

u. Victaulic Company.

v. Watts Water Technologies, Inc.

2.6 SPECIALTY VALVES

A. General Requirements:

1. Standard: UL's "Fire Protection Equipment Directory" listing or "Approval Guide," published by FM Global, listing.

2. Minimum Pressure Rating: 175 psig (1200 kPa).

3. Body Material: Cast or ductile iron.

4. Size: Same as connected piping.

5. End Connections: Flanged or grooved.

B. Alarm Check Valves:

1. Manufacturers: Subject to compliance with requirements, available manufacturers offering products that may be incorporated into the Work include, but are not limited to, the following:

2. Basis-of-Design Product: Subject to compliance with requirements, provide product indicated on Drawings or comparable product by one of the following:

a. AFAC Inc.

b. Globe Fire Sprinkler Corporation.

c. Reliable Automatic Sprinkler Co., Inc.

d. Tyco Fire & Building Products LP.

e. Venus Fire Protection Ltd.

f. Victaulic Company.

g. Viking Corporation.

3. Standard: UL 193.

4. Design: For horizontal or vertical installation.

5. Include trim sets for bypass, drain, electrical sprinkler alarm switch, pressure gages, retarding chamber, and fill-line attachment with strainer.

6. Drip Cup Assembly: Pipe drain without valves and separate from main drain piping.

7. Drip Cup Assembly: Pipe drain with check valve to main drain piping.

C. Automatic (Ball Drip) Drain Valves:

1. Manufacturers: Subject to compliance with requirements, available manufacturers offering products that may be incorporated into the Work include, but are not limited to, the following:

a. AFAC Inc.

b. Reliable Automatic Sprinkler Co., Inc.

c. Tyco Fire & Building Products LP.

2. Standard: UL 1726.

3. Pressure Rating: 175 psig (1200 kPa) minimum.

4. Type: Automatic draining, ball check.

5. Size: NPS 3/4 (DN 20).

6. End Connections: Threaded.

2.7 FIRE-DEPARTMENT CONNECTIONS (FDC)

A. Fire-Department Connection: Provided under Site Civil Division of work.

2.8 SPRINKLER SPECIALTY PIPE FITTINGS

A. Branch Outlet Fittings:

1. Manufacturers: Subject to compliance with requirements, available manufacturers offering products that may be incorporated into the Work include, but are not limited to, the following:

a. Anvil International, Inc.

b. National Fittings, Inc.

c. Shurjoint Piping Products.

d. Tyco Fire & Building Products LP.

e. Victaulic Company.

2. Standard: UL 213.

3. Pressure Rating: 175 psig (1200 kPa) minimum.

4. Body Material: Ductile-iron housing with EPDM seals and bolts and nuts.

5. Type: Mechanical-T and -cross fittings.

6. Configurations: Snap-on and strapless, ductile-iron housing with branch outlets.

7. Size: Of dimension to fit onto sprinkler main and with outlet connections as required to match connected branch piping.

8. Branch Outlets: Grooved, plain-end pipe, or threaded.

B. Flow Detection and Test Assemblies:

1. Manufacturers: Subject to compliance with requirements, available manufacturers offering products that may be incorporated into the Work include, but are not limited to, the following:

a. AGF Manufacturing Inc.

b. Reliable Automatic Sprinkler Co., Inc.

c. Tyco Fire & Building Products LP.

d. Victaulic Company.

2. Standard: UL's "Fire Protection Equipment Directory" listing or "Approval Guide," published by FM Global, listing.

3. Pressure Rating: 175 psig (1200 kPa) minimum.

4. Body Material: Cast- or ductile-iron housing with orifice, sight glass, and integral test valve.

5. Size: Same as connected piping.

6. Inlet and Outlet: Threaded.

C. Branch Line Testers:

1. Manufacturers: Subject to compliance with requirements, available manufacturers offering products that may be incorporated into the Work include, but are not limited to, the following:

a. Elkhart Brass Mfg. Company, Inc.

b. Fire-End & Croker Corporation.

c. Potter Roemer.

2. Standard: UL 199.

3. Pressure Rating: 175 psig (1200 kPa) minimum.

4. Body Material: Brass.

5. Size: Same as connected piping.

6. Inlet: Threaded.

7. Drain Outlet: Threaded and capped.

8. Branch Outlet: Threaded, for sprinkler.

D. Sprinkler Inspector's Test Fittings:

1. Manufacturers: Subject to compliance with requirements, available manufacturers offering products that may be incorporated into the Work include, but are not limited to, the following:

a. AGF Manufacturing Inc.

b. Triple R Specialty.

c. Tyco Fire & Building Products LP.

d. Victaulic Company.

e. Viking Corporation.

2. Standard: UL's "Fire Protection Equipment Directory" listing or "Approval Guide," published by FM Global, listing.

3. Pressure Rating: 175 psig (1200 kPa) minimum.

4. Body Material: Cast- or ductile-iron housing with sight glass.

5. Size: Same as connected piping.

6. Inlet and Outlet: Threaded.

E. Adjustable Drop Nipples:

1. Manufacturers: Subject to compliance with requirements, available manufacturers offering products that may be incorporated into the Work include, but are not limited to, the following:

a. CECA, LLC.

b. Corcoran Piping System Co.

c. Merit Manufacturing; a division of Anvil International, Inc.

2. Standard: UL 1474.Pressure Rating: 250 psig (1725 kPa) minimum.

3. Body Material: Steel pipe with EPDM-rubber O-ring seals.

4. Size: Same as connected piping.

5. Length: Adjustable.

6. Inlet and Outlet: Threaded.

F. Flexible, Sprinkler Hose Fittings:

1. Manufacturers: Subject to compliance with requirements, available manufacturers offering products that may be incorporated into the Work include, but are not limited to, the following:
a. Fivalco Inc.

b. FlexHead Industries, Inc.

c. Gateway Tubing, Inc.

2. Standard: UL 1474.

3. Type: Flexible hose for connection to sprinkler, and with bracket for connection to ceiling grid.

4. Pressure Rating: 175 psig (1200 kPa) minimum.

5. Size: Same as connected piping, for sprinkler.

2.09 SPRINKLERS

A. Manufacturers:

Subject to compliance with requirements, available manufacturers offering products that may be incorporated into the Work include, but are not limited to, the following:

1. AFAC Inc.
2. Globe Fire Sprinkler Corporation.
3. Reliable Automatic Sprinkler Co., Inc.
4. Tyco Fire & Building Products LP.
5. Venus Fire Protection Ltd.
6. Victaulic Company.
7. Viking Corporation.

B. General Requirements:

1. Standard: UL's "Fire Protection Equipment Directory" listing or "Approval Guide," published by FM Global, listing.

2. Pressure Rating for Automatic Sprinklers: 175 psig (1200 kPa) minimum.

C. Automatic Sprinklers With Heat-Responsive Element:

1. Nonresidential Applications: UL 199.

2. Characteristics: Nominal 1/2-inch (12.7-mm) orifice with Discharge Coefficient K of 5.6, and for "Ordinary" temperature classification rating unless otherwise indicated or required by application.

3. Sprinklers with different orifice size and K factor may be used, dependant on the available water pressure, based on the hydraulic calculations.

D. Sprinkler Finishes:

1. Chrome plated.
2. Bronze.
3. other finishes and coatings as may be required for the service intended.

E. Special Coatings:

1. Wax.
2. Corrosion-resistant paint.(Factory Applied)

F. Sprinkler Escutcheons:

Materials, types, and finishes for the following sprinkler mounting applications. Escutcheons for concealed, flush, and recessed-type sprinklers are specified with sprinklers.

1. Ceiling Mounting: Chrome-plated steel, two piece, with 1-inch (25-mm) vertical adjustment.

2. Sidewall Mounting: Chrome-plated steel, one piece, flat.

G. Sprinkler Guards:

H. Manufacturers:

Subject to compliance with requirements, [available manufacturers offering products that may be incorporated into the Work include, but are not limited to, the following:

1. Reliable Automatic Sprinkler Co., Inc.
2. Tyco Fire & Building Products LP.
3. Victaulic Company.
d. Viking Corporation.

2. Standard: UL 199.

3. Type: Wire cage with fastening device for attaching to sprinkler.

2.10 ALARM DEVICES

Alarm-device types shall match piping and equipment connections.

A. WATER-MOTOR-OPERATED ALARM:

1. Manufacturers: Subject to compliance with requirements, available manufacturers offering products that may be incorporated into the Work include, but are not limited to, the following:

a. Globe Fire Sprinkler Corporation.
b. Tyco Fire & Building Products LP.
c. Victaulic Company.
d. Viking Corporation

2. Standard: UL 753.

3. Type: Mechanically operated, with Pelton wheel.

4. Alarm Gong: Cast aluminum with red-enamel factory finish.

5. Size: 10-inch (250-mm) diameter.

6. Components: Shaft length, bearings, and sleeve to suit wall construction.

7. Inlet: NPS 3/4 (DN 20).

8. Outlet: NPS 1 (DN 25) drain connection.

B. WATER-FLOW INDICATORS:

1. Manufacturers: Subject to compliance with requirements, available manufacturers offering products that may be incorporated into the Work include, but are not limited to, the following:

a. ADT Security Services, Inc.
b. McDonnell & Miller; ITT Industries.
c. Potter Electric Signal Company.
d. System Sensor; a Honeywell company.
e. Viking Corporation.
f. Watts Industries (Canada) Inc.

2. Standard: UL 346.

3. Water-Flow Detector: Electrically supervised.

4. Components: Two single-pole, double-throw circuit switches for isolated alarm and auxiliary contacts, 7 A, 125-V ac and 0.25 A, 24-V dc; complete with factory-set, field-adjustable retard element to prevent false signals and tamperproof cover that sends signal if removed.

5. Type: Paddle operated.

6. Pressure Rating: 250 psig (1725 kPa).

7. Design Installation: Horizontal or vertical.

C. VALVE SUPERVISORY SWITCHES:

1. Manufacturers: Subject to compliance with requirements, available manufacturers offering products that may be incorporated into the Work include, but are not limited to, the following:

a. Fire-Lite Alarms, Inc.; a Honeywell company.
b. Kennedy Valve; a division of McWane, Inc.
c. Potter Electric Signal Company.
d. System Sensor; a Honeywell company.

2. Standard: UL 346.

3. Type: Electrically supervised.

4. Components: Single-pole, double-throw switch with normally closed contacts.

5. Design: Signals that controlled valve is in other than fully open position.

2.11 PRESSURE GAGES

1. Manufacturers: Subject to compliance with requirements, available manufacturers offering products that may be incorporated into the Work include, but are not limited to, the following:

a. AMETEK; U.S. Gauge Division.
b. Ashcroft, Inc.
c. Brecco Corporation.
d. WIKA Instrument Corporation.

2. Standard: UL 393.

3. Dial Size: 3-1/2- to 4-1/2-inch (90- to 115-mm) diameter.

4. Pressure Gage Range: 0 to 250 psig (0 to 1725 kPa) minimum.

5. Water System Piping Gage: Include "WATER" or "AIR/WATER" label on dial face.

. Air System Piping Gage: Include retard feature and "AIR" or "AIR/WATER" label on dial face.

PART 3—EXECUTION

3.01 SERVICE-ENTRANCE PIPING

Connect sprinkler piping to Site water-service piping for service entrance to building.

3.02 PIPING INSTALLATION

1. Locations and Arrangements: Drawing plans, schematics, and diagrams indicate general location and arrangement of piping. Install piping as indicated and as stated here-in.

a. Deviations from approved working plans for piping require written approval from the Architect / Engineer and authorities having jurisdiction. File written documentation with Architect / Engineer before deviating from approved working plans.

2. Piping Standard: Comply with requirements for installation of sprinkler piping in NFPA 13.

3. Install seismic restraints on piping. Comply with requirements for seismic-restraints, devices, materials and installation in NFPA 13 and as stated above 13-930.1.3(d).

4. Use listed fittings to make changes in direction, branch takeoffs from mains, and reductions in pipe sizes.

5. Install unions adjacent to each valve in pipes NPS 2 (DN 50) and smaller.

6. Install flanges, flange adapters, or couplings for grooved-end piping on valves, apparatus, and equipment having NPS 2-1/2 (DN 65) and larger end connections.

7. Install "Inspector's Test Connections" in sprinkler system piping, complete with shutoff valve, and sized and located according to NFPA 13 (13.8.17.4).

8. Install sprinkler piping with drains for complete system drainage.

9. Install sprinkler control valves, test assemblies, and drains per NFPA 13.

10. Install automatic (ball drip) drain valve at each check valve for fire-department connection, to drain piping between fire-department connection and check valve. Install drain piping to and spill over floor drain or to outside building.

11. Install alarm devices in piping systems.

12. Install hangers and supports for sprinkler system piping according to NFPA 13. Comply with requirements for hanger materials in NFPA 13.

13. Install pressure gages on riser or feed main, at each sprinkler test connection, and at top of each standpipe. Include pressure gages with connection not less than NPS 1/4 (DN 8) and

with soft metal seated globe valve, arranged for draining pipe between gage and valve. Install gages to permit removal, and install where they will not be subject to freezing.

14. Fill sprinkler system piping with water.

15. Install electric heating cables and pipe insulation on sprinkler piping in areas subject to freezing. Comply with manufacturers requirements for heating cables.

16. Install sleeves for piping penetrations of walls, ceilings, and floors. Comply with requirements for sleeves specified in Section 13-991 "Sleeves and Sleeve Seals for Fire-Suppression Piping."

17. Install sleeve seals for piping penetrations of concrete walls and slabs. Comply with requirements for sleeve seals specified in Section 13-991 "Sleeves and Sleeve Seals for Fire-Suppression Piping."

18. Install escutcheons for piping penetrations of walls, ceilings, and floors. Comply with requirements for escutcheons specified in Section 13-996 "Escutcheons for Fire-Suppression Piping."

3.03 JOINT CONSTRUCTION

1. Install couplings, flanges, flanged fittings, unions, nipples, and transition and special fittings that have finish and pressure ratings same as or higher than system's pressure rating for aboveground applications unless otherwise indicated.

2. Install unions adjacent to each valve in pipes NPS 2 (DN 50) and smaller.

3. Install flanges, flange adapters, or couplings for grooved-end piping on valves, apparatus, and equipment having NPS 2-1/2 (DN 65) and larger end connections.

4. Ream ends of pipes and tubes and remove burrs. Bevel plain ends of steel pipe.

5. Remove scale, slag, dirt, and debris from inside and outside of pipes, tubes, and fittings before assembly.

6. Flanged Joints: Select appropriate gasket material in size, type, and thickness suitable for water service. Join flanges with gasket and bolts according to ASME B31.9.

7. Threaded Joints: Thread pipe with tapered pipe threads according to ASME B1.20.1. Cut threads full and clean using sharp dies. Ream threaded pipe ends to remove burrs and restore full ID. Join pipe fittings and valves as follows:

a. Apply appropriate tape or thread compound to external pipe threads.

b. Damaged Threads: Do not use pipe or pipe fittings with threads that are corroded or damaged.

8. Twist-Locked Joints: Insert plain end of steel pipe into plain-end-pipe fitting. Rotate retainer lugs one-quarter turn or tighten retainer pin.

9. Steel-Piping, Pressure-Sealed Joints: Join light wall steel pipe and steel pressure-seal fittings with tools recommended by fitting manufacturer.

10. Welded Joints: Construct joints according to AWS D10.12M/D10.12, using qualified processes and welding operators according to "Quality Assurance" Article.

a. Shop-weld pipe joints where welded piping is indicated. Do not use welded joints for galvanized-steel pipe.

11. Steel-Piping, Cut-Grooved Joints: Cut square-edge groove in end of pipe according to AWWA C606. Assemble coupling with housing, gasket, lubricant, and bolts. Join steel pipe and grooved-end fittings according to AWWA C606 for steel-pipe joints.

12. Steel-Piping, Roll-Grooved Joints: Roll rounded-edge groove in end of pipe according to AWWA C606. Assemble coupling with housing, gasket, lubricant, and bolts. Join steel pipe and grooved-end fittings according to AWWA C606 for steel-pipe grooved joints.

13. Steel-Piping, Pressure-Sealed Joints: Join Schedule 5 steel pipe and steel pressure-seal fittings with tools recommended by fitting manufacturer.

14. Dissimilar-Material Piping Joints: Make joints using adapters compatible with materials of both piping systems.

3.04 VALVE AND SPECIALTIES INSTALLATION

Install listed fire-protection valves, trim and drain valves, specialty valves and trim, controls, and specialties according to NFPA 13 and authorities having jurisdiction.

Install listed fire-protection shutoff valves supervised open, located to control sources of water supply except from fire-department connections. Install permanent identification signs indicating portion of system controlled by each valve.

Install check valve in each water-supply connection. Install backflow preventers instead of check valves in potable-water-supply sources.

A. SPECIALTY VALVES:

1. General Requirements: Install in vertical position for proper direction of flow, in main supply to system.

2. Alarm Valves: Include bypass check valve and retarding chamber drain-line connection.

3.05 SPRINKLER INSTALLATION

Install sprinklers in suspended ceilings in center of narrow dimension of acoustical ceiling panels.

Install dry-type sprinklers with water supply from heated space. Do not install pendent or sidewall, wet-type sprinklers in areas subject to freezing.

Install sprinklers into flexible, sprinkler hose fittings and install hose into bracket on ceiling grid.

3.06 FIRE-DEPARTMENT CONNECTION INSTALLATION

Install wall-type, fire-department connections.

Install automatic (ball drip) drain valve at each check valve for fire-department connection.

3.07 IDENTIFICATION

Install labeling and pipe markers on equipment and piping according to requirements in NFPA 13.

Identify system components, wiring, cabling, and terminals. Comply with requirements for identification specified in Section 16000 "General Requirements for Electrical Workdd."

3.08 FIELD QUALITY CONTROL

1. Perform tests and inspections.

2. Tests and Inspections:

a. Leak Test: After installation, charge systems and test for leaks. Repair leaks and retest until no leaks exist.
b. Test and adjust controls and safeties. Replace damaged and malfunctioning controls and equipment.
c. Flush, test, and inspect sprinkler systems according to NFPA 13, "Systems Acceptance" Chapter.
d. Energize circuits to electrical equipment and devices.
e. Coordinate with fire-alarm tests. Operate as required.
f. Coordinate with fire-pump tests. Operate as required.
g. Verify that equipment hose threads are same as local fire-department equipment.

3. See Section "Quality Requirements" for retesting and re-inspecting requirements and Section "Execution" for requirements for correcting the Work.

4. Sprinkler piping system will be considered defective if it does not pass tests and inspections.

5. Prepare test and inspection reports.

3.09 CLEANING

1. Clean dirt and debris from sprinklers.

2. Remove and replace sprinklers with paint other than factory finish.

3.10 PIPING SCHEDULE

A. PIPING BETWEEN FIRE-DEPARTMENT CONNECTIONS AND CHECK VALVES:

Galvanized, standard-weight steel pipe with threaded ends; cast-iron threaded fittings; and threaded joints.

Sprinkler specialty fittings may be used, downstream of control vales, instead of specified fittings.

Wet-pipe sprinkler system, NPS 2 (DN 50) and smaller, shall be one of the following:

1. Standard-weight, black-steel pipe with threaded ends; uncoated, gray-iron threaded fittings; and threaded joints.

2. Standard-weight, galvanized-steel pipe with threaded ends; galvanized, gray-iron threaded fittings; and threaded joints.

3. Standard-weight, black-steel pipe with cut- or roll-grooved ends; uncoated, grooved-end fittings for steel piping; grooved-end-pipe couplings for steel piping; and grooved joints.

4. Standard-weight, galvanized-steel pipe with cut-grooved ends; galvanized, grooved-end fittings for steel piping; grooved-end-pipe couplings for steel piping; and grooved joints.

5. Standard-weight, black-steel pipe with plain ends; steel welding fittings; and welded joints.

6. Thin wall black-steel pipe with roll-grooved ends; uncoated, grooved-end fittings for steel piping; grooved-end-pipe couplings for steel piping; and grooved joints.

7. Thin wall black-steel pipe with plain ends; welding fittings; and welded joints.

Standard-pressure, wet-pipe sprinkler system, NPS 2-1/2 to NPS 6 (DN 65 to DN 150), shall be one of the following:

1. Standard-weight, black-steel pipe with threaded ends; uncoated, gray-iron threaded fittings; and threaded joints.

2. Standard-weight, galvanized-steel pipe with threaded ends; galvanized, gray-iron threaded fittings; and threaded joints.

3. Standard-weight, black-steel pipe with cut- or -roll-grooved ends; uncoated, grooved-end fittings for steel piping; grooved-end-pipe couplings for steel piping; and grooved joints.

4. Standard-weight, galvanized-steel pipe with cut-grooved ends; galvanized, grooved-end fittings for steel piping; grooved-end-pipe couplings for steel piping; and grooved joints.

5. Standard-weight, black-steel pipe with plain ends; steel welding fittings; and welded joints.

6. Thin wall black-steel pipe with roll-grooved ends; uncoated, grooved-end fittings for steel piping; grooved-end-pipe couplings for steel piping; and grooved joints.

7. Thin wall black-steel pipe with plain ends; welding fittings; and welded joints.

3.11 SPRINKLER SCHEDULE

1. Use sprinkler types listed in the “Fire Protection Sprinkler Schedule”: shown on drawing 00-F-002

2. Rooms without Ceilings: Upright sprinklers.

a. Rooms with Suspended Ceilings: Pendent,

b. Wall Mounting: Sidewall sprinklers.

c. Special Applications: Extended-coverage, flow-control, and quick-response sprinklers. Provide as needed – coordinate with Architect / Engineer.

3. Provide sprinkler types in subparagraphs below with finishes indicated.

1. Recessed Sprinklers: Bright chrome, with bright chrome escutcheon.

2. Upright, Pendent, and Sidewall Sprinklers: rough bronze/brass in unfinished spaces not exposed to view; wax coated where exposed to acids, chemicals, or other corrosive fumes.

END OF SECTION

SECTION 13916

PRE-ACTION SPRINKLER SYSTEM

PART 1—GENERAL

1.01 WORK INCLUDED

This section includes:

1. Pipes, fittings, and specialties.
2. Fire-protection valves.
3. Sprinklers.
4. Alarm devices.
5. Pressure gages.
6. Water Control Valve
7. Electric Actuator
8. Solenoid Valve
9. System Control Valve
10. Dry Pendent Sprinklers
11. Riser Mounted Compressed Air Supply
12. Supplemental Detection System: Electric smoke detection device(s)
13. System Check Valve
14. Fire Department Connection: Provided under the Civil Division of work.
15. Pressure Supervisory Switch
16. Alarm Pressure Switch
17. Water Motor Alarm Gong.
18. Deluge Valve Release Control Panel.

1.02 SYSTEM DESCRIPTIONS

A. PRE-ACTION SPRINKLER SYSTEM:

Single interlock system with electric (smoke detector) detection and soleniod pneumatic release to charge the ping with water; piping, Pre-action Deluge valve, check valve, water motor gong, fire department connection, valve trim, test valves, gages, etc., riser mounted air compressor, pendant fusible sprinklers, Electric detection heat detector(s), Emergency release, alarm pressure switch, water motor gong, Pre-action panel, will be used. See the Fire Sprinkler System schedule and details on the drawings.

The pre-action system riser shall be of a listed and approved assembly.

1.03 PERFORMANCE REQUIREMENTS

A. WORKING PRESSURE: PIPING SYSTEM COMPONENT:

Listed for 175-psig (1200-kPa) minimum working pressure for Fire Sprinkler System Service per NFPA 13.6.1.3.

B. DELEGATED DESIGN:

Design sprinkler system, including comprehensive engineering analysis by a qualified professional, using performance requirements and design criteria as scheduled on the drawings and stated in this specification section and section 3915.

Sprinkler system design shall be approved by authorities having jurisdiction.

1. Maximum Protection Area per Sprinkler: (As Scheduled on the drawings) Per NFPA 13.8.5.2.2 and UL listing.

C. SEISMIC PERFORMANCE:

Sprinkler piping shall withstand the effects of earthquake motions determined according to NFPA 13.9.3.; the International Building Code 1613-1623 and International Fire Code.

1.04 SUBMITTALS

A. PRODUCT DATA:

For each type of product indicated.

B. SHOP DRAWINGS:

For wet-pipe sprinkler systems. Include plans, elevations, sections, details, and attachments to other work.

1. Retain subparagraph below if equipment includes wiring.
2. Wiring Diagrams: For power, signal, and control wiring.

C. DELEGATED-DESIGN SUBMITTAL:

For sprinkler systems indicated to comply with performance requirements and design criteria, including analysis data signed and sealed by the qualified professional engineer responsible for their preparation.

D. QUALIFICATION DATA:

For qualified installer and professional engineer.

E. APPROVED SPRINKLER PIPING DRAWINGS:

Working plans, prepared according to NFPA 13, that have been approved by authorities having jurisdiction, including hydraulic calculations if applicable.

F. WELDING CERTIFICATES.

G. FIELD TEST REPORTS AND CERTIFICATES:

Indicate and interpret test results for compliance with performance requirements and as described in NFPA 13. Include "Contractor's Material and Test Certificate for Aboveground Piping."

H. FIELD QUALITY-CONTROL REPORTS.

I. OPERATION AND MAINTENANCE DATA.

J. BUY AMERICA REQUIREMENTS:

Provide “Certificate of Compliance with Buy America Requirements” in accordance with Federal Regulation 49 CFR 661.

1. Listing as an acceptable manufacturer shall not relieve the contractor from compliance with this requirement.

1.05 QUALITY ASSURANCE

A. INSTALLER QUALIFICATIONS:

1. Installer's responsibilities include designing, fabricating, and installing sprinkler systems and providing professional engineering services needed to assume engineering responsibility. Base calculations on results of fire-hydrant flow test.

2. Engineering Responsibility: Preparation of working plans, calculations, and field test reports by a qualified professional engineer.

B. WELDING QUALIFICATIONS:

Qualify procedures and operators according to ASME Boiler and Pressure Vessel Code AND NFPA 13.6.5.2.

C. ELECTRICAL COMPONENTS, DEVICES, AND ACCESSORIES:

Listed and labeled as defined in NFPA 70, by a qualified testing agency, and marked for intended location and application.

D. NFPA STANDARDS:

Sprinkler system equipment, specialties, accessories, installation, and testing shall comply with the following:

1. NFPA 13, "Installation of Sprinkler Systems."

PART 2—PRODUCTS

2.01 PIPING MATERIALS

Comply with requirements in "Piping Schedule" Article for applications of pipe, tube, and fitting materials, and for joining methods for specific services, service locations, and pipe sizes.

2.02 STEEL PIPE AND FITTINGS

1. Standard Weight, Galvanized-Black Steel Pipe: ASTM A 53/A 53M, Type E, Grade B. Pipe ends may be factory or field formed to match joining method.

2. Schedule 30, Galvanized-Black Steel Pipe: ASTM A 135; ASTM A 795/A 795M, Type E; or ASME B36.10M, wrought steel; with wall thickness not less than Schedule 30 and not more than Schedule 40. Pipe ends may be factory or field formed to match joining method.

3. Thin wall Galvanized and Black Steel Pipe: ASTM A 135 or ASTM A 795/A 795M, threadable, with wall thickness less than Schedule 30 and equal to or greater than Schedule 10. Pipe ends may be factory or field formed to match joining method.

4. Galvanized and Black-Steel Pipe Nipples: ASTM A 733, made of ASTM A 53/A 53M, standard-weight, seamless steel pipe with threaded ends.

5. Galvanized and Uncoated, Steel Couplings: ASTM A 865, threaded.

6. Galvanized and Uncoated, Gray-Iron Threaded Fittings: ASME B16.4, Class 125, standard pattern.

7. Malleable- or Ductile-Iron Unions: UL 860.

8. Cast-Iron Flanges: ASME 16.1, Class 125.

9. Steel Flanges and Flanged Fittings: ASME B16.5, Class 150.

10. Steel Welding Fittings: ASTM A 234/A 234M and ASME B16.9.

11. Grooved-Joint, Steel-Pipe Appurtenances:

a. Manufacturers: Subject to compliance with requirements, provide products by one of the following:

1) Anvil International, Inc.
2) Corcoran Piping System Co.
3) National Fittings, Inc.
4) Tyco Fire & Building Products LP.
5) Victaulic Company.

b. Pressure Rating: 175 psig (1200 kPa) minimum.

c. Galvanized and Uncoated, Grooved-End Fittings for Steel Piping: ASTM A 47/A 47M, malleable-iron casting or ASTM A 536, ductile-iron casting; with dimensions matching steel pipe.

d. Grooved-End-Pipe Couplings for Steel Piping: AWWA C606 and UL 213, rigid pattern, unless otherwise indicated, for steel-pipe dimensions. Include ferrous housing sections, EPDM-rubber gasket, and bolts and nuts.

12. Steel Pressure-Seal Fittings: UL 213, FM-approved, 175-psig (1200-kPa) pressure rating with steel housing, rubber O-rings, and pipe stop; for use with fitting manufacturers' pressure-seal tools.

a. Manufacturers: Subject to compliance with requirements, available manufacturers offering products that may be incorporated into the Work include, but are not limited to, the following:

1) Victaulic Company.

2.03 PIPING JOINING MATERIALS

A. PIPE-FLANGE GASKET MATERIALS:

AWWA C110, rubber, flat face, 1/8 inch (3.2 mm) thick or ASME B16.21, nonmetallic and asbestos free.

1. Class 125, Cast-Iron Flat-Face Flanges: Full-face gaskets.

B. METAL, PIPE-FLANGE BOLTS AND NUTS:

ASME B18.2.1, carbon steel unless otherwise indicated.

C. WELDING FILLER METALS:

Comply with AWS D10.12M/D10.12 for welding materials appropriate for wall thickness and chemical analysis of steel pipe being welded.

2.04 LISTED FIRE-PROTECTION VALVES

A. GENERAL REQUIREMENTS:

1. Valves shall be UL listed or FM approved.

2. Minimum Pressure Rating: 175 psig (1200 kPa).

B. CHECK VALVES:

1. Manufacturers: Subject to compliance with requirements, available manufacturers offering products that may be incorporated into the Work include, but are not limited to, the following:

2. Basis-of-Design Product: Subject to compliance with requirements, provide product indicated on Drawings or comparable product by one of the following:

a. AFAC Inc.
b. American Cast Iron Pipe Company; Waterous Company Subsidiary.
c. Anvil International, Inc.
d. Clow Valve Company; a division of McWane, Inc.
e. Crane Co.; Crane Valve Group; Crane Valves.
f. Crane Co.; Crane Valve Group; Jenkins Valves.
g. Crane Co.; Crane Valve Group; Stockham Division.
h. Fire-End & Croker Corporation.
i. Fire Protection Products, Inc.
j. Fivalco Inc.
k. Globe Fire Sprinkler Corporation.
l. Groeniger & Company.
m. Kennedy Valve; a division of McWane, Inc.
n. Matco-Norca.
o. Metraflex, Inc.
p. Milwaukee Valve Company.
q. Mueller Co.; Water Products Division.
r. NIBCO INC.
s. Potter Roemer.
t. Reliable Automatic Sprinkler Co., Inc.
u. Shurjoint Piping Products.
v. Tyco Fire & Building Products LP.
w. United Brass Works, Inc.
x. Venus Fire Protection Ltd.
y. Victaulic Company.

z. Viking Corporation.
aa. Watts Water Technologies, Inc.

3. Standard: UL 312.

4. Pressure Rating: 250 psig (1725 kPa) minimum.

5. Type: Swing check.

6. Body Material: Cast iron.

7. End Connections: Flanged or grooved.

C. BRONZE OS&Y GATE VALVES:

1. Manufacturers: Subject to compliance with requirements, available manufacturers offering products that may be incorporated into the Work include, but are not limited to, the following:

2. Basis-of-Design Product: Subject to compliance with requirements, provide product indicated on Drawings or comparable product by one of the following:

a. Crane Co.; Crane Valve Group; Crane Valves.
b. Crane Co.; Crane Valve Group; Stockham Division.
c. Milwaukee Valve Company.
d. NIBCO INC.
e. United Brass Works, Inc.

3. Standard: UL 262.

4. Pressure Rating: 175 psig (1200 kPa).

5. Body Material: Bronze.

6. End Connections: Threaded.

D. IRON OS&Y GATE VALVES:

1. Manufacturers: Subject to compliance with requirements, available manufacturers offering products that may be incorporated into the Work include, but are not limited to, the following:

2. Basis-of-Design Product: Subject to compliance with requirements, provide product indicated on Drawings or comparable product by one of the following:

a. American Cast Iron Pipe Company; Waterous Company Subsidiary.
b. American Valve, Inc.

c. Clow Valve Company; a division of McWane, Inc.
d. Crane Co.; Crane Valve Group; Crane Valves.
e. Crane Co.; Crane Valve Group; Jenkins Valves.
f. Crane Co.; Crane Valve Group; Stockham Division.
g. Hammond Valve.
h. Milwaukee Valve Company.
i. Mueller Co.; Water Products Division.
j. NIBCO INC.
k. Shurjoint Piping Products.
l. Tyco Fire & Building Products LP.
m. United Brass Works, Inc.
n. Watts Water Technologies, Inc.

3. Standard: UL 262.

4. Pressure Rating: 250 psig (1725 kPa) minimum.

5. Body Material: Cast or ductile iron.

6. End Connections: Flanged or grooved.

E. INDICATING-TYPE BUTTERFLY VALVES:

1. Manufacturers: Subject to compliance with requirements, available manufacturers offering products that may be incorporated into the Work include, but are not limited to, the following:

2. Basis-of-Design Product: Subject to compliance with requirements, provide product indicated on Drawings or comparable product by one of the following:

a. Anvil International, Inc.
b. Fivalco Inc.
c. Global Safety Products, Inc.
d. Kennedy Valve; a division of McWane, Inc.
e. Milwaukee Valve Company.
f. NIBCO INC.
g. Shurjoint Piping Products.
h. Tyco Fire & Building Products LP.
i. Victaulic Company.

3. Standard: UL 1091.

4. Pressure Rating: 175 psig (1200 kPa) minimum.

5. Valves NPS 2 (DN 50) and Smaller:

a. Valve Type: Ball or butterfly.
b. Body Material: Bronze.
c. End Connections: Threaded.

6. Valves NPS 2-1/2 (DN 65) and Larger:

a. Valve Type: Butterfly.
b. Body Material: Cast or ductile iron.
c. End Connections: Flanged, grooved, or wafer.

7. Valve Operation: Integral electrical, 115-V ac, prewired, two-circuit, supervisory switch indicating device.

2.05 TRIM AND DRAIN VALVES

A. GENERAL REQUIREMENTS:

1. Standard: UL's "Fire Protection Equipment Directory" listing or "Approval Guide," published by FM Global, listing.

2. Minimum Pressure Rating: 175 psig (1200 kPa).

B. BALL VALVES:

1. Manufacturers: Subject to compliance with requirements, available manufacturers offering products that may be incorporated into the Work include, but are not limited to, the following:

a. Affiliated Distributors.
b. Anvil International, Inc.
c. Barnett.
d. Conbraco Industries, Inc.; Apollo Valves.
e. Fire-End & Croker Corporation.
f. Fire Protection Products, Inc.
g. Flowserve.
h. FNW.
i. Jomar International, Ltd.
j. Kennedy Valve; a division of McWane, Inc.
k. Kitz Corporation.
l. Legend Valve.
m. Metso Automation USA Inc.
n. Milwaukee Valve Company.
o. NIBCO INC.
p. Potter Roemer.
q. Red-White Valve Corporation.
r. Southern Manufacturing Group.

s. Stewart, M. A. and Sons Ltd.
t. Tyco Fire & Building Products LP.
u. Victaulic Company.
v. Watts Water Technologies, Inc.

2.06 SPECIALTY VALVES

A. GENERAL REQUIREMENTS:

1. Standard: UL's "Fire Protection Equipment Directory" listing or "Approval Guide," published by FM Global, listing.

2. Minimum Pressure Rating: 175 psig (1200 kPa).

3. Body Material: Cast or ductile iron.

4. Size: Same as connected piping.

5. End Connections: Flanged or grooved.

B. PRE-ACTION VALVES:

1. Manufacturers: Subject to compliance with requirements, available manufacturers offering products that may be incorporated into the Work include, but are not limited to, the following:

2. Basis-of-Design Product: Subject to compliance with requirements, provide product indicated on Drawings or comparable product by one of the following:

a. AFAC Inc.
b. Globe Fire Sprinkler Corporation.
c. Reliable Automatic Sprinkler Co., Inc.
d. Tyco Fire & Building Products LP.
e. Venus Fire Protection Ltd.
f. Victaulic Company.
g. Viking Corporation.

3. Standard: UL 193.

4. Design: For horizontal or vertical installation.

5. Include trim sets for bypass, drain, electrical sprinkler alarm switch, pressure gages, retarding chamber, and fill-line attachment with strainer.

6. Drip Cup Assembly: Pipe drain without valves and separate from main drain piping.

7. Drip Cup Assembly: Pipe drain with check valve to main drain piping.

C. AUTOMATIC (BALL DRIP) DRAIN VALVES:

1. Manufacturers: Subject to compliance with requirements, available manufacturers offering products that may be incorporated into the Work include, but are not limited to, the following:

a. AFAC Inc.
b. Reliable Automatic Sprinkler Co., Inc.
c. Tyco Fire & Building Products LP.

2. Standard: UL 1726.

3. Pressure Rating: 175 psig (1200 kPa) minimum.

4. Type: Automatic draining, ball check.

5. Size: NPS 3/4 (DN 20).

6. End Connections: Threaded.

2.07 FIRE-DEPARTMENT CONNECTIONS (FDC)

A. FIRE-DEPARTMENT CONNECTION:

Provided under Site Civil Division of work.

2.08 SPRINKLER SPECIALTY PIPE FITTINGS

A. BRANCH OUTLET FITTINGS:

1. Manufacturers: Subject to compliance with requirements, available manufacturers offering products that may be incorporated into the Work include, but are not limited to, the following:

a. Anvil International, Inc.
b. National Fittings, Inc.
c. Shurjoint Piping Products.
d. Tyco Fire & Building Products LP.
e. Victaulic Company.

2. Standard: UL 213.

3. Pressure Rating: 175 psig (1200 kPa) minimum.

4. Body Material: Ductile-iron housing with EPDM seals and bolts and nuts.

5. Type: Mechanical-T and -cross fittings.

6. Configurations: Snap-on and strapless, ductile-iron housing with branch outlets.

7. Size: Of dimension to fit onto sprinkler main and with outlet connections as required to match connected branch piping.

8. Branch Outlets: Grooved, plain-end pipe, or threaded.

B. FLOW DETECTION AND TEST ASSEMBLIES:

1. Manufacturers: Subject to compliance with requirements, available manufacturers offering products that may be incorporated into the Work include, but are not limited to, the following:

a. AGF Manufacturing Inc.
b. Reliable Automatic Sprinkler Co., Inc.
c. Tyco Fire & Building Products LP.
d. Victaulic Company.

2. Standard: UL's "Fire Protection Equipment Directory" listing or "Approval Guide," published by FM Global, listing.

3. Pressure Rating: 175 psig (1200 kPa) minimum.

4. Body Material: Cast- or ductile-iron housing with orifice, sight glass, and integral test valve.

5. Size: Same as connected piping.

6. Inlet and Outlet: Threaded.

C. BRANCH LINE TESTERS:

1. Manufacturers: Subject to compliance with requirements, available manufacturers offering products that may be incorporated into the Work include, but are not limited to, the following:

a. Elkhart Brass Mfg. Company, Inc.
b. Fire-End & Croker Corporation.
c. Potter Roemer.

2. Standard: UL 199.

3. Pressure Rating: 175 psig (1200 kPa) minimum.

4. Body Material: Brass.

5. Size: Same as connected piping.

6. Inlet: Threaded.

7. Drain Outlet: Threaded and capped.

8. Branch Outlet: Threaded, for sprinkler.

D. SPRINKLER INSPECTOR'S TEST FITTINGS:

1. Manufacturers: Subject to compliance with requirements, available manufacturers offering products that may be incorporated into the Work include, but are not limited to, the following:

a. AGF Manufacturing Inc.
b. Triple R Specialty.
c. Tyco Fire & Building Products LP.
d. Victaulic Company.
e. Viking Corporation.

2. Standard: UL's "Fire Protection Equipment Directory" listing or "Approval Guide," published by FM Global, listing.

3. Pressure Rating: 175 psig (1200 kPa) minimum.

4. Body Material: Cast- or ductile-iron housing with sight glass.

5. Size: Same as connected piping.

6. Inlet and Outlet: Threaded.

E. ADJUSTABLE DROP NIPPLES:

1. Manufacturers: Subject to compliance with requirements, available manufacturers offering products that may be incorporated into the Work include, but are not limited to, the following:

a. CECA, LLC.
b. Corcoran Piping System Co.
c. Merit Manufacturing; a division of Anvil International, Inc.

2. Standard: UL 1474.Pressure Rating: 250 psig (1725 kPa) minimum.

3. Body Material: Steel pipe with EPDM-rubber O-ring seals.

4. Size: Same as connected piping.

5. Length: Adjustable.

6. Inlet and Outlet: Threaded.

F. FLEXIBLE, SPRINKLER HOSE FITTINGS:

1. Manufacturers: Subject to compliance with requirements, available manufacturers offering products that may be incorporated into the Work include, but are not limited to, the following:

a. Fivalco Inc.
b. FlexHead Industries, Inc.
c. Gateway Tubing, Inc.

2. Standard: UL 1474.

3. Type: Flexible hose for connection to sprinkler, and with bracket for connection to ceiling grid.

4. Pressure Rating: 175 psig (1200 kPa) minimum.

5. Size: Same as connected piping, for sprinkler.

2.09 SPRINKLERS

A. MANUFACTURERS:

Subject to compliance with requirements, available manufacturers offering products that may be incorporated into the Work include, but are not limited to, the following:

1. AFAC Inc.
2. Globe Fire Sprinkler Corporation.
3. Reliable Automatic Sprinkler Co., Inc.
4. Tyco Fire & Building Products LP.
5. Venus Fire Protection Ltd.
6. Victaulic Company.
7. Viking Corporation.

B. GENERAL REQUIREMENTS:

1. Standard: UL's "Fire Protection Equipment Directory" listing or "Approval Guide," published by FM Global, listing.

2. Pressure Rating for Automatic Sprinklers: 175 psig (1200 kPa) minimum.

C. AUTOMATIC SPRINKLERS WITH HEAT-RESPONSIVE ELEMENT:

1. Nonresidential Applications: UL 199.

2. Characteristics: Nominal 1/2-inch (12.7-mm) orifice with Discharge Coefficient K of 5.6, and for "Ordinary" temperature classification rating unless otherwise indicated or required by application.

3. Sprinklers with different orifice size and K factor may be used, dependent on the available water pressure, based on the hydraulic calculations.

D. SPRINKLER FINISHES:

1. Chrome plated.
2. Bronze.
3. other finishes and coatings as may be required for the service intended.

E. SPECIAL COATINGS:

1. Wax.
2. Corrosion-resistant paint.(Factory Applied)

F. SPRINKLER ESCUTCHEONS:

Materials, types, and finishes for the following sprinkler mounting applications. Escutcheons for concealed, flush, and recessed-type sprinklers are specified with sprinklers.

1. Ceiling Mounting: Chrome-plated steel, two piece, with 1-inch (25-mm) vertical adjustment.

2. Sidewall Mounting: Chrome-plated steel, one piece, flat.

G. SPRINKLER GUARDS:

1. Manufacturers: Subject to compliance with requirements, available manufacturers offering products that may be incorporated into the Work include, but are not limited to, the following:

a. Reliable Automatic Sprinkler Co., Inc.
b. Tyco Fire & Building Products LP.
c. Victaulic Company.
d. Viking Corporation.

2. Standard: UL 199.
3. Type: Wire cage with fastening device for attaching to sprinkler.

2.10 ALARM DEVICES

Alarm-device types shall match piping and equipment connections.

A. WATER-MOTOR-OPERATED ALARM:

1. Manufacturers: Subject to compliance with requirements, available manufacturers offering products that may be incorporated into the Work include, but are not limited to, the following:

a. Globe Fire Sprinkler Corporation.
b. Tyco Fire & Building Products LP.
c. Victaulic Company.
d. Viking Corporation.

2. Standard: UL 753.

3. Type: Mechanically operated, with Pelton wheel.

4. Alarm Gong: Cast aluminum with red-enamel factory finish.

5. Size: 10-inch (250-mm) diameter.

6. Components: Shaft length, bearings, and sleeve to suit wall construction.

7. Inlet: NPS 3/4 (DN 20).

8. Outlet: NPS 1 (DN 25) drain connection.

B. WATER-FLOW INDICATORS:

1. Manufacturers: Subject to compliance with requirements, available manufacturers offering products that may be incorporated into the Work include, but are not limited to, the following:

a. ADT Security Services, Inc.
b. McDonnell & Miller; ITT Industries.
c. Potter Electric Signal Company.
d. System Sensor; a Honeywell company.
e. Viking Corporation.
f. Watts Industries (Canada) Inc.

2. Standard: UL 346.

3. Water-Flow Detector: Electrically supervised.

4. Components: Two single-pole, double-throw circuit switches for isolated alarm and auxiliary contacts, 7 A, 125-V ac and 0.25 A, 24-V dc; complete with factory-set, field-adjustable retard element to prevent false signals and tamperproof cover that sends signal if removed.

5. Type: Paddle operated.

6. Pressure Rating: 250 psig (1725 kPa).

7. Design Installation: Horizontal or vertical.

C. VALVE SUPERVISORY SWITCHES:

1. Manufacturers: Subject to compliance with requirements, available manufacturers offering products that may be incorporated into the Work include, but are not limited to, the following:

a. Fire-Lite Alarms, Inc.; a Honeywell company.
b. Kennedy Valve; a division of McWane, Inc.
c. Potter Electric Signal Company.
d. System Sensor; a Honeywell company.

2. Standard: UL 346.

3. Type: Electrically supervised.

4. Components: Single-pole, double-throw switch with normally closed contacts.

5. Design: Signals that controlled valve is in other than fully open position.

2.11 PRESSURE GAGES

1. Manufacturers: Subject to compliance with requirements, available manufacturers offering products that may be incorporated into the Work include, but are not limited to, the following:

a. AMETEK; U.S. Gauge Division.
b. Ashcroft, Inc.
c. Brecco Corporation.
d. WIKA Instrument Corporation.

2. Standard: UL 393.

3. Dial Size: 3-1/2- to 4-1/2-inch (90- to 115-mm) diameter.

4. Pressure Gage Range: 0 to 250 psig (0 to 1725 kPa) minimum.

5. Water System Piping Gage: Include "WATER" or "AIR/WATER" label on dial face.

6. Air System Piping Gage: Include retard feature and "AIR" or "AIR/WATER" label on dial face.

PART 3—EXECUTION

3.01 SERVICE-ENTRANCE PIPING

Connect sprinkler piping to Site water-service piping for service entrance to building.

3.02 BASIC SYSTEM OPERATION

The method of release of the deluge valve priming water pressure shall be by activation of the supplemental smoke detection system only. The system riser shall be equipped with a rubber seated check valve downstream of the deluge valve and prior to the riser mounted supervisory air compressor. The pre-action system shall be provided with all necessary appurtenances to complete the system. The system shall be installed in conformance with the most current Edition of NFPA 13, Standard for Installation of Sprinkler Systems. The Pre-action System shall be of the Single Interlock Release type. Upon actuation of the smoke detector, the piping shall be charged with water by a pneumatic solenoid valve, through the deluge valve. Upon actuation (fusing) of a pendent sprinkler head, water shall be release from the sprinkler piping to extinguish the fire.

3.03 PIPING INSTALLATION

1. Locations and Arrangements: Drawing plans, schematics, and diagrams indicate general location and arrangement of piping. Install piping as indicated and as stated here-in.

a. Deviations from approved working plans for piping require written approval from the Architect / Engineer and authorities having jurisdiction. File written documentation with Architect / Engineer before deviating from approved working plans.

2. Piping Standard: Comply with requirements for installation of sprinkler piping in NFPA 13.

3. Install seismic restraints on piping. Comply with requirements for seismic-restraints, devices, materials and installation in NFPA 13 and as stated above 13-930.1.3(d).

4. Use listed fittings to make changes in direction, branch takeoffs from mains, and reductions in pipe sizes.

5. Install unions adjacent to each valve in pipes NPS 2 (DN 50) and smaller.

6. Install flanges, flange adapters, or couplings for grooved-end piping on valves, apparatus, and equipment having NPS 2-1/2 (DN 65) and larger end connections.

7. Install "Inspector's Test Connections" in sprinkler system piping, complete with shutoff valve, and sized and located according to NFPA 13 (13.8.17.4).

8. Install sprinkler piping with drains for complete system drainage.

9. Install sprinkler control valves, test assemblies, and drains per NFPA 13.

10. Install automatic (ball drip) drain valve at each check valve for fire-department connection, to drain piping between fire-department connection and check valve. Install drain piping to and spill over floor drain or to outside building.

11. Install alarm devices in piping systems.

12. Install hangers and supports for sprinkler system piping according to NFPA 13. Comply with requirements for hanger materials in NFPA 13.

13. Install pressure gages on riser or feed main, at each sprinkler test connection, and at top of each standpipe. Include pressure gages with connection not less than NPS 1/4 (DN 8) and with soft metal seated globe valve, arranged for draining pipe between gage and valve. Install gages to permit removal, and install where they will not be subject to freezing.

14. Fill sprinkler system piping with water.

15. Install electric heating cables and pipe insulation on sprinkler piping in areas subject to freezing. Comply with manufacturers requirements for heating cables.

16. Install sleeves for piping penetrations of walls, ceilings, and floors. Comply with requirements for sleeves specified in Section 13-991 "Sleeves and Sleeve Seals for Fire-Suppression Piping."

17. Install sleeve seals for piping penetrations of concrete walls and slabs. Comply with requirements for sleeve seals specified in Section 13-991 "Sleeves and Sleeve Seals for Fire-Suppression Piping."

18. Install escutcheons for piping penetrations of walls, ceilings, and floors. Comply with requirements for escutcheons specified in Section 13-996 "Escutcheons for Fire-Suppression Piping."

3.04 JOINT CONSTRUCTION

1. Install couplings, flanges, flanged fittings, unions, nipples, and transition and special fittings that have finish and pressure ratings same as or higher than system's pressure rating for aboveground applications unless otherwise indicated.

2. Install unions adjacent to each valve in pipes NPS 2 (DN 50) and smaller.

3. Install flanges, flange adapters, or couplings for grooved-end piping on valves, apparatus, and equipment having NPS 2-1/2 (DN 65) and larger end connections.

4. Ream ends of pipes and tubes and remove burrs. Bevel plain ends of steel pipe.

5. Remove scale, slag, dirt, and debris from inside and outside of pipes, tubes, and fittings before assembly.

6. Flanged Joints: Select appropriate gasket material in size, type, and thickness suitable for water service. Join flanges with gasket and bolts according to ASME B31.9.

7. Threaded Joints: Thread pipe with tapered pipe threads according to ASME B1.20.1. Cut threads full and clean using sharp dies. Ream threaded pipe ends to remove burrs and restore full ID. Join pipe fittings and valves as follows:

a. Apply appropriate tape or thread compound to external pipe threads.

b. Damaged Threads: Do not use pipe or pipe fittings with threads that are corroded or damaged.

8. Twist-Locked Joints: Insert plain end of steel pipe into plain-end-pipe fitting. Rotate retainer lugs one-quarter turn or tighten retainer pin.

9. Steel-Piping, Pressure-Sealed Joints: Join light wall steel pipe and steel pressure-seal fittings with tools recommended by fitting manufacturer.

10. Welded Joints: Construct joints according to AWS D10.12M/D10.12, using qualified processes and welding operators according to "Quality Assurance" Article.

a. Shop-weld pipe joints where welded piping is indicated. Do not use welded joints for galvanized-steel pipe.

11. Steel-Piping, Cut-Grooved Joints: Cut square-edge groove in end of pipe according to AWWA C606. Assemble coupling with housing, gasket, lubricant, and bolts. Join steel pipe and grooved-end fittings according to AWWA C606 for steel-pipe joints.

12. Steel-Piping, Roll-Grooved Joints: Roll rounded-edge groove in end of pipe according to AWWA C606. Assemble coupling with housing, gasket, lubricant, and bolts. Join steel pipe and grooved-end fittings according to AWWA C606 for steel-pipe grooved joints.

13. Steel-Piping, Pressure-Sealed Joints: Join Schedule 5 steel pipe and steel pressure-seal fittings with tools recommended by fitting manufacturer.

14. Dissimilar-Material Piping Joints: Make joints using adapters compatible with materials of both piping systems.

3.05 VALVE AND SPECIALTIES INSTALLATION

Install listed fire-protection valves, trim and drain valves, specialty valves and trim, controls, and specialties according to NFPA 13 and authorities having jurisdiction.

Install listed fire-protection shutoff valves supervised open, located to control sources of water supply except from fire-department connections. Install permanent identification signs indicating portion of system controlled by each valve.

Install check valve in each water-supply connection. Install backflow preventers instead of check valves in potable-water-supply sources.

A. SPECIALTY VALVES:

1. General Requirements: Install in vertical position for proper direction of flow, in main supply to system.

2. Alarm Valves: Include bypass check valve and retarding chamber drain-line connection.

3.06 SPRINKLER INSTALLATION

Install sprinklers in suspended ceilings in center of narrow dimension of acoustical ceiling panels.

Install dry-type sprinklers with water supply from heated space. Do not install pendent or sidewall, wet-type sprinklers in areas subject to freezing.

Install sprinklers into flexible, sprinkler hose fittings and install hose into bracket on ceiling grid.

3.07 FIRE-DEPARTMENT CONNECTION INSTALLATION

Install wall-type, fire-department connections.

Install automatic (ball drip) drain valve at each check valve for fire-department connection.

3.08 IDENTIFICATION

Install labeling and pipe markers on equipment and piping according to requirements in NFPA 13.

Identify system components, wiring, cabling, and terminals. Comply with requirements for identification specified in Section 16000 "General Requirements for Electrical Work."

3.09 FIELD QUALITY CONTROL

1. Perform tests and inspections.

2. Tests and Inspections:

a. Leak Test: After installation, charge systems and test for leaks. Repair leaks and retest until no leaks exist.

b. Test and adjust controls and safeties. Replace damaged and malfunctioning controls and equipment.

c. Flush, test, and inspect sprinkler systems according to NFPA 13, "Systems Acceptance" Chapter.

d. Energize circuits to electrical equipment and devices.

e. Coordinate with fire-alarm tests. Operate as required.

f. Coordinate with fire-pump tests. Operate as required.

g. Verify that equipment hose threads are same as local fire-department equipment.

3. See Section "Quality Requirements" for retesting and re-inspecting requirements and Section "Execution" for requirements for correcting the Work.

4. Sprinkler piping system will be considered defective if it does not pass tests and inspections.

5. Prepare test and inspection reports.

3.10 CLEANING

1. Clean dirt and debris from sprinklers.

2. Remove and replace sprinklers with paint other than factory finish.

3.11 PIPING SCHEDULE

A. PIPING BETWEEN FIRE-DEPARTMENT CONNECTIONS AND CHECK VALVES:

Galvanized, standard-weight steel pipe with [threaded ends; cast-iron threaded fittings; and threaded] [grooved ends; grooved-end fittings; grooved-end-pipe couplings; and grooved] joints.

Sprinkler specialty fittings may be used, downstream of control valves, instead of specified fittings.

Wet-pipe sprinkler system, NPS 2 (DN 50) and smaller, shall be one of the following:

1. Standard-weight, black-steel pipe with threaded ends; uncoated, gray-iron threaded fittings; and threaded joints.

2. Standard-weight, galvanized-steel pipe with threaded ends; galvanized, gray-iron threaded fittings; and threaded joints.

3. Standard-weight, black-steel pipe with cut- or roll-grooved ends; uncoated, grooved-end fittings for steel piping; grooved-end-pipe couplings for steel piping; and grooved joints.

4. Standard-weight, galvanized-steel pipe with cut-grooved ends; galvanized, grooved-end fittings for steel piping; grooved-end-pipe couplings for steel piping; and grooved joints.

5. Standard-weight, black-steel pipe with plain ends; steel welding fittings; and welded joints.

6. Thin wall black-steel pipe with roll-grooved ends; uncoated, grooved-end fittings for steel piping; grooved-end-pipe couplings for steel piping; and grooved joints.

7. Thin wall black-steel pipe with plain ends; welding fittings; and welded joints.

Standard-pressure, wet-pipe sprinkler system, NPS 2-1/2 to NPS 6 (DN 65 to DN 150), shall be one of the following:

1. Standard-weight, black-steel pipe with threaded ends; uncoated, gray-iron threaded fittings; and threaded joints.

2. Standard-weight, galvanized-steel pipe with threaded ends; galvanized, gray-iron threaded fittings; and threaded joints.

3. Standard-weight, black-steel pipe with cut- or -roll-grooved ends; uncoated, grooved-end fittings for steel piping; grooved-end-pipe couplings for steel piping; and grooved joints.

4. Standard-weight, galvanized-steel pipe with cut-grooved ends; galvanized, grooved-end fittings for steel piping; grooved-end-pipe couplings for steel piping; and grooved joints.

5. Standard-weight, black-steel pipe with plain ends; steel welding fittings; and welded joints.

6. Thin wall black-steel pipe with roll-grooved ends; uncoated, grooved-end fittings for steel piping; grooved-end-pipe couplings for steel piping; and grooved joints.

7. Thin wall black-steel pipe with plain ends; welding fittings; and welded joints.

3.12 SPRINKLER SCHEDULE

1. Use sprinkler types listed in the “Fire Protection Sprinkler Schedule”: shown on drawing 00-F-002.

2. Rooms without Ceilings: Upright sprinklers.

a. Rooms with Suspended Ceilings: Pendent.

b. Wall Mounting: Sidewall sprinklers.

c. Special Applications: Extended-coverage, flow-control, and quick-response sprinklers. Provide as needed – coordinate with Architect / Engineer.

3. Provide sprinkler types in subparagraphs below with finishes indicated.

1. Recessed Sprinklers: Bright chrome, with bright chrome escutcheon.

2. Upright, Pendent, and Sidewall Sprinklers: rough bronze/brass in unfinished spaces not exposed to view; wax coated where exposed to acids, chemicals, or other corrosive fumes.

END OF SECTION

SECTION 13967

FM-200® CLEAN-AGENT FIRE SUPPRESSION SYSTEM WITH DETECTION/RELEASE SYSTEM

PART 1—GENERAL

1.01 WORK INCLUDED

This section includes:

This specification outlines the requirements for a “Total Flood” Clean Agent Fire Suppression System with automatic detection and control. The work described in this specification includes all engineering, labor, materials, equipment and services necessary, and required, to complete and test the suppression system.

All system components within the space including detectors, sensors, etc. shall be supplied and installed under this specification and wired to the FM 200 (Clean Agent) panel.

The Fire alarm system supplied under section 16850 shall pickup all alarm signals from the FM 200 (Clean Agent) system at the FM 200 (Clean Agent) system panel.

Alternate: As an alternate, a Sapphire™ Clean Agent suppression system is acceptable.

1.02 APPLICABLE STANDARDS AND PUBLICATIONS

The design, equipment, installation, testing and maintenance of the Clean Agent Suppression System shall be in accordance with the applicable requirements set forth in the latest edition of the following codes and standards:

1. NFPA No. 2001 - Clean Agent Fire Extinguishing Systems
2. NFPA No. 70 - National Electrical Code
3. NFPA No. 72 - Standard For Protective Signaling
4. Factory Mutual Approval Guide
5. UL Listings
6. Requirements of the Authority Having Jurisdiction (AHJ).

The standards listed, as well as all other applicable codes, standards, and good engineering practices shall be used as "minimum" design standards.

1.03 REQUIREMENTS

The Suppression System installation shall be made in accordance with the drawings, specifications and applicable standards. Should a conflict occur between the drawings and specifications, the specifications shall prevail.

1.04 EXCLUSIONS

The work listed below shall be provided by others, or under other sections of this specification:

1. 120 VAC or 220 VAC power supply to the system control panel.

2. Interlock wiring and conduit for shutdown of HVAC, dampers and/or electric power supplies, relays or shunt trip breakers.

3. Connection to local/remote fire alarm systems, listed central alarm station(s) or sprinkler preaction/deluge valve actuation.

1.05 QUALITY ASSURANCE

A. MANUFACTURER:

1. The manufacturer of the suppression system hardware and detection components shall be ISO 9000 registered.

2. The name of the manufacturer shall appear on all major components.

3. All devices, components and equipment shall be the products of the same manufacturer.

4. All devices, components and equipment shall be new, standard products of the manufacturer's latest design and suitable to perform the functions intended.

5. All devices and equipment shall be U.L listed and/or FM approved.

6. Locks for all cabinets shall be keyed alike.

B. INSTALLER:

1. The installing contractor shall be trained by the supplier to design, install, test and maintain fire suppression systems.

2. When possible, the installing contractor shall employ a NICET certified special hazard designer, Level II or above, who will be responsible for this project.

3. The installing contractor shall be an experienced firm regularly engaged in the installation of automatic Clean Agent, or similar, fire suppression systems in strict accordance with all applicable codes and standards.

4. The installing contractor must have a minimum of five (5) years experience in the design, installation and testing of Clean Agent, or

similar, fire suppression systems. A list of systems of a similar nature and scope shall be provided on request.

5. The installing contractor shall show evidence that his company carries a minimum $2,000,000.00 liability and completed operations insurance policy. These limits shall supersede limits required in the general conditions of the specifications.

6. The installing contractor shall maintain, or have access to, a Clean Agent recharging station. The installing contractor shall provide proof of his ability to recharge the largest Clean Agent system within 24 hours after a discharge. Include the amount of bulk agent storage available.

7. The installing contractor shall be an authorized stocking distributor of the Clean Agent system equipment so that immediate replacement parts are available from inventory.

8. The installing contractor shall show proof of emergency service available on a 24-hour-a-day, 7-day-a-week basis.

C. SUBMITTALS:

1. The installing contractor shall submit the following design information and drawings for approval prior to starting work on this project:

   a. Field installation layout drawings having a scale of not less than 1/8” = 1’-0” or 1:100 detailing the location of all agent storage tanks, nozzles, pipe runs including pipe sizes and lengths, control panel(s), detectors, manual pull stations, abort stations, audible and visual alarms, etc.
   b. Auxiliary details and information such as maintenance panels, door holders, special sealing requirements and equipment shutdown.
   c. Separate layouts, or drawings, shall be provided for each level, (i.e., room, underfloor, and above ceiling) and for mechanical and electrical work.
   d. A separate layout or drawing shall show isometric details of agent storage containers, mounting details, proposed pipe runs and sizes, and symbol legend.
   e. Electrical layout drawings shall show the location of all devices and include point-to-point conduit runs and a description of the method(s) used for detector mounting.
   f. Provide an internal control panel wiring diagram which shall include power supply requirements and field wiring termination points.
   g. Separate drawing providing symbol legend to identify all symbols used.
   h. Annunciator wiring schematics and dimensioned display panel illustration shall be provided. (Optional device.)

i. Complete hydraulic flow calculations, from a UL listed computer program, shall be provided for all engineered Clean Agent systems. Calculation sheet(s) must include the manufacturers name and UL listing number for verification. The individual sections of pipe and each fitting to be used, as shown on the isometrics, must be identified and included in the calculation. Total agent discharge time must be shown and detailed by zone.

j. Provide calculations for the battery stand-by power supply, taking into consideration the power requirements of all alarms, initiating devices and auxiliary components under full load conditions.

k. A complete sequence of operation shall be submitted detailing all alarm devices, shutdown functions, remote signaling, damper operation, time delay and agent discharge for each zone or system.

2. Submit drawings, calculations and system component data sheets for approval to the local fire prevention agency, owner's insurance underwriter, and all other authorities having jurisdiction before starting installation. Submit approved plans to the architect/engineer for record.

PART 2—SYSTEM REQUIREMENTS

2.01 SYSTEM DESCRIPTION AND OPERATION

The system shall be a Total Flood FM-200 Suppression System supplied by PYROCHEM.

The system shall provide a FM-200 minimum design concentration of 7.2% by volume for Class A hazards and 9.0% by volume for Class B hazards, in all areas and/or protected spaces, at the minimum anticipated temperature within the protected area. System design shall not exceed 10.5% for normally occupied spaces, adjusted for maximum space temperature anticipated, with provisions for room evacuation before agent release.

The system shall be complete in all ways. It shall include all mechanical and electrical installation, all detection and control equipment, agent storage containers, FM-200 agent, discharge nozzles, pipe and fittings, manual release and abort stations, audible and visual alarm devices, auxiliary devices and controls, shutdowns, alarm interface, caution/advisory signs, functional checkout and testing, training and all other operations necessary for a functional, UL Listed and/or FM approved FM-200 Clean Agent Suppression System.

Provide two (2) inspections during the first year of service. Inspections shall be made at 6-month intervals commencing when the system is first placed into normal service.

The general contractor shall be responsible for sealing and securing the protected spaces against agent loss and/or leakage during the 10-minute "hold" period.

The system(s) shall be actuated by a combination of ionization and/or photoelectric detectors installed for maximum area coverage of 250 sq. ft. (23.2 m2) per detector, in both the

room, underfloor and above ceiling protected spaces. If the airflow is one air change per minute, photoelectric detectors only shall be installed for maximum area coverage of 125 sq. ft. (11.6 m2) per detector. (Ref. NFPA No. 72.)

Detectors shall be Cross-Zoned detection requiring two detectors to be in alarm before release.

Automatic operation of each protected area shall be as follows:

1. Actuation of one (1) detector, within the system, shall:

    a. Illuminate the "ALARM" lamp on the control panel face.
    b. Energize an alarm bell and/or an optional visual indicator.
    c. Transfer auxiliary contacts which can perform auxiliary system functions such as: i) Operate door holder/closures on access doors, ii) Transmit a signal to a fire alarm system, iii) Shutdown HVAC equipment.
    d. Light an individual lamp on an optional annunciator.

2. Actuation of a 2nd detector, within the system, shall:

    a. Illuminate the "PRE-DISCHARGE" lamp on the control panel face.
    b. Energize a pre-discharge horn or horn/strobe device.
    c. Shut down the HVAC system and/or close dampers.
    d. Start time-delay sequence (not to exceed 60 seconds).
    e. System abort sequence is enabled at this time.
    f. Light an individual lamp on an optional annunciator.

3. After completion of the time-delay sequence, the FM-200 Clean Agent system shall discharge and the following shall occur:

    a. Illuminate a "SYSTEM FIRED" lamp on the control panel face.
    b. Shutdown of all power to high-voltage equipment
    c. Energize a visual indicator(s) outside the hazard in which the discharge occurred.
    d. Energize a "System Fired" audible device. (Optional)

4. The system shall be capable of being actuated by manual discharge devices located at each hazard exit. Operation of a manual device shall duplicate the sequence description above except that the time delay and abort functions shall be bypassed. The manual discharge station shall be of the electrical actuation type and shall be supervised at the main control panel.

2.02 MATERIALS AND EQUIPMENT

A. GENERAL REQUIREMENTS:

1. The FM-200 Clean Agent System materials and equipment shall be standard products of the supplier's latest design and suitable to perform the functions intended. When one or more pieces of equipment must perform the same function(s), they shall be duplicates produced by one manufacturer.

2. All devices and equipment shall be UL Listed and/or FM approved.

B. FM-200 AGENT STORAGE AND DISTRIBUTION:

1. Each system shall have its own supply of clean agent.

2. The system design can be modular, central storage, or a combination of both design criteria.

3. Systems shall be designed in accordance with the manufacturer's guidelines.

4. Each supply shall be located within the hazard area, or immediately outside the hazard area.

5. The clean agent shall be stored in PYRO-CHEM Agent Storage Containers. Containers shall be super-pressurized with dry nitrogen to an operating pressure of 360 psi @ 70 degrees F (24.8 bar at 20 degrees C). Containers shall be of high-strength low alloy steel construction and conform to NFPA 2001.

6. Containers shall be actuated by a resettable electric actuator with mechanical override located at each agent container or connected bank of cylinders. Nonresettable or explosive devices shall not be permitted.

7. Each container shall have a pressure gauge and low pressure switch to provide visual and electrical supervision of the container pressure. The low-pressure switch shall be wired to the control panel to provide an audible and visual "Trouble" alarms in the event the container pressure drops below 247 psi (17 bar). The pressure gauge shall be color coded to provide an easy, visual indication of container pressure.

8. Each container shall have a pressure relief provision that automatically operates before the internal pressure exceeds 750 psi (51.7 bar).

9. Engineered discharge nozzles shall be provided within the manufacturer's guidelines to distribute the FM-200 agent throughout the protected spaces. The nozzles shall be designed to provide proper agent quantity and distribution.

    a. Nozzles shall be available in 3/8 in. through 2 in. (BPS 10 mm through 50 mm) pipe sizes. Each size shall be available in 180o and 360o distribution patterns.
    b. Ceiling plates can be used with the nozzles to conceal pipe entry holes through ceiling tiles.

10. Distribution piping, and fittings, shall be installed in accordance with the manufacturer's requirements, NFPA 2001 and approved piping standards and guidelines. All distribution piping shall be installed by qualified individuals using accepted practices and quality procedures. All piping shall be adequately supported and anchored at all directional changes and nozzle locations.

    a. All piping shall be reamed, blown clear and swabbed with suitable solvents to remove burrs, mill varnish and cutting oils before assembly.
    b. All pipe threads shall be sealed with Teflon tape pipe sealant applied to the male thread only.

C. CONTROL PANEL:

1. The control panel shall be a PCR releasing panel supplied by the contractor.

2. The control system and its components shall be UL listed and FM approved for use as a local fire alarm system with releasing device service.

3. The control system shall perform all functions necessary to operate the system detection, actuation and auxiliary functions.

4. The control system shall include battery standby power to support 24 hours in standby and 5 minutes in alarm.

5. The control system shall be microprocessor based utilizing a distributed processing concept. A single microprocessor failure shall not impact operation of additional modules on the system.

6. The control system shall be capable of supporting Cross Zoned Detection.

7. The control system shall supply integrated 2.0 amp power supply circuitry.

8. Each control system shall have four (4) initiating circuits.

   a. Each circuit shall be capable of Class A (Style D) or Class B (Style A) operation.
   b. Each circuit shall be capable of operating up to fifteen (15) approved detectors for thirty (30) detectors per system.
   c. Each circuit shall be capable of monitoring contact devices configured for manual release, manual alarm, system abort, trouble input or auxiliary (non-fire) input.

9. Each control shall contain release circuits for activation of an extinguishing/suppression system(s).

   a. Each circuit shall be capable of Class B (Style Y) operation.
   b. Each circuit shall be rated for 1.5 amp @ 24 VDC.

10. Each control system shall contain two (2) indicating appliance circuits for annunciation.

    a. Each circuit shall be capable of Class A (Style B) or Class B (Style Y) operation.
    b. Each circuit shall be rated for 1.5 amp @ 24 VDC.

11. Each control system shall provide an auxiliary power supply rated for 2 amps @ 24 VDC.

12. Each control system shall provide two (2) SPST relays: one for common alarm and one for common trouble. Four (4) additional programmable relays can be added to each control system by adding an RX2M Relay Module.

D. DETECTORS:

1. The detectors shall be spaced and installed in accordance with the manufacturer's specifications and the guidelines of NFPA 72.

2. The ionization detector shall be a PYRO-CHEM model, or equal in quality, performance and features.

3. The photoelectric detector shall be a PYRO-CHEM model, or equal in quality, performance and features.

E. MANUAL RELEASE (Electric):

1. The electric manual release switch shall be a dual action device which provides a means of manually discharging the Suppression System when used in conjunction with the control system.

2. The Manual Release switch shall be a PYRO-CHEM model, or equal in quality, performance and features.

3. The Manual Release switch or Manual Pull station shall be a dual action device requiring two distinct operations to initiate a system actuation.

4. Manual actuation shall bypass the time delay and abort functions shall cause the system to discharge and shall cause all release and shutdown devices to operate in the same manner as if the system had operated automatically.

5. A Manual Release switch shall be located at each exit from the protected hazard.

F. ABORT STATION (Optional):

1. The optional Abort Station shall be the "Dead Man" type and shall be located next to each manual switch.

2. The Abort Station shall be a PYRO-CHEM model, or equal in quality, performance and features.

3. The Abort Station shall be supervised and shall indicate a trouble condition at the control panel, if depressed, and no alarm condition exists.

4. "Locking" or "Keyed" abort stations shall not be permitted.

G. AUDIBLE and VISUAL ALARMS:

1. Alarm audible and visual signal devices shall operate from the control panel.

2. The Alarm Bell, Alarm Horn and Horn/Strobe devices shall be PYRO-CHEM model, or equal in quality, performance and features.

3. The visual alarm unit shall be a PYRO-CHEM Strobe device, or equal in quality, performance and features.

4. A Strobe device shall be placed outside, and above, each exit door from the protected space. Provide an advisory sign at each light location

H. CAUTION and ADVISORY SIGNS:

Signs shall be provided to comply with NFPA 2001 and the recommendations of the FM-200 equipment supplier.

1. Entrance sign: (1) required at each entrance to a protected space.

2. Manual discharge sign: (1) required at each manual discharge station.

3. Flashing light sign: (1) required at each flashing light over each exit from a protected space.

I. SYSTEM and CONTROL WIRING:

1. All system wiring shall be furnished and installed by the contractor.

2. All wiring shall be installed in electrical metallic tubing (EMT), or conduit, and must be installed and kept separate from all other building wiring.

3. All system components shall be securely supported independent of the wiring. Runs of conduit and wiring shall be straight, neatly arranged, properly supported, and installed parallel and perpendicular to walls and partitions.

4. The sizes of the conductors shall be those specified by the manufacturer. Color-coded wire shall be used. All wires shall be tagged at all junction points and shall be free from shorts, earth connections (unless so noted on the system drawings), and crosses between conductors. Final terminations between the control panel and the system field wiring shall be made under the direct supervision of a factory-trained representative.

5. All wiring shall be installed by qualified individuals, in a neat and workmanlike manner, to conform to the National Electrical Code, Article 725 and Article 760, except as otherwise permitted for limited energy circuits, as described in NFPA 72 -1993 edition. Wiring installation shall meet all local, state, province and/or country codes.

6. The complete system electrical installation, and all auxiliary components, shall be connected to earth ground in accordance with the National Electrical Code.

PART 3—TESTING AND DOCUMENTATION

3.01 SYSTEM INSPECTION AND CHECKOUT

After the system installation has been completed, the entire system shall be checked out, inspected and functionally tested by qualified, trained personnel, in accordance with the manufacturer's recommended procedures and NFPA standards.

All containers and distribution piping shall be checked for proper mounting and installation.

All electrical wiring shall be tested for proper connection, continuity and resistance to earth.

The complete system shall be functionally tested, in the presence of the owner or his representative, and all functions, including system and equipment interlocks, must be operational at least five (5) days prior to the final acceptance tests.

1. Each detector shall be tested in accordance with the manufacturer's recommended procedures, and test values recorded.

2. All system and equipment interlocks, such as door release devices, audible and visual devices, equipment shutdowns, local and remote alarms, etc. shall function as required and designed.

3. Each control panel circuit shall be tested for trouble by inducing a trouble condition into the system.

3.02 TRAINING REQUIREMENTS

Prior to final acceptance, the installing contractor shall provide operational training to each shift of the owners personnel. Each training session shall include control panel operation, manual and (optional) abort functions, trouble procedures, supervisory procedures, auxiliary functions and emergency procedures.

3.03 OPERATION AND MAINTENANCE

Prior to final acceptance, the installing contractor shall provide complete operation and maintenance instruction manuals, four (4) copies for each system, to the owner. All aspects of system operation and maintenance shall be detailed, including piping isometrics, wiring diagrams of all circuits, a written description of the system design, sequence of operation and drawing(s) illustrating control logic and equipment used in the system. Checklists and procedures for emergency situations, troubleshooting techniques, maintenance operations and procedures shall be included in the manual.

3.04 AS-BUILT DRAWINGS

Upon completion of each system, the installing contractor shall provide four (4) copies of system "As-Built" drawings to the owner. The drawings shall show actual installation details including all equipment locations (i.e., control panel(s), agent container(s), detectors, alarms, manuals and aborts, etc.) as well as piping and conduit routing details. Show all room or facilities modifications, including door and/or damper installations completed. One (1) copy of reproducible engineering drawings shall be provided reflecting all actual installation details.

3.05 ACCEPTANCE TESTS

At the time "As-Built" drawings and maintenance/operations manuals are submitted, the installing contractor shall submit a "Test Plan" describing procedures to be used to test the control system(s). The Test Plan shall include a step-by-step description of all tests to be performed and shall indicate the type and location of test apparatus to be employed. The tests shall demonstrate that the operational and installation requirements of this specification have been met. All tests shall be conducted in the presence of the owner and shall not be conducted until the Test Plan has been approved.

The tests shall demonstrate that the entire control system functions as designed and intended. All circuits shall be tested: automatic actuation, solenoid and manual actuation, HVAC and power shutdowns, audible and visual alarm devices and manual override of abort functions. Supervision of all panel circuits, including AC power and battery power supplies, shall be tested and qualified.

A room pressurization test shall be conducted, in each protected space, to determine the presence of openings which would affect the agent concentration levels. The test(s) shall be conducted using the Retro-Tec Corp. Door Fan system, or equivalent, with integrated computer program. All testing shall be in accordance with NFPA 2001, Appendix B.

If room pressurization testing indicates that openings exist which would result in leakage and/or loss of the extinguishing agent, the installing contractor shall be responsible for coordinating the proper sealing of the protected space(s) by the general contractor or his subcontractor or agent. The general contractor shall be responsible for adequately sealing all protected space(s) against agent loss or leakage. The installing contractor shall inspect all work to ascertain that the protected space(s) have been adequately and properly sealed. THE SUPPRESSION SYSTEM INSTALLING CONTRACTOR SHALL BE RESPONSIBLE FOR THE SUCCESS OF THE ROOM PRESSURIZATION TESTS. If the first room pressurization test is not successful, in accordance with these specifications, the installing contractor shall direct the general contractor to determine, and correct, the cause of the test failure. The installing contractor shall conduct additional room pressurization tests, at no additional cost to the owner, until a successful test is obtained. Copies of successful test results shall be submitted to the owner for record. Upon acceptance by the owner, the completed system(s) shall be placed into service.

3.06 SYSTEM INSPECTIONS

The installing contractor shall provide two (2) inspections of each system, installed under this contract, during the one-year warranty period. The first inspection shall be at the 6-month interval, and the second inspection at the 12-month interval, after system acceptance. Inspections shall be conducted in accordance with the manufacturer's guidelines and the recommendations of NFPA 2001.

Documents certifying satisfactory system(s) operation shall be submitted to the owner upon completion of each inspection.

3.07 WARRANTY

All system components furnished and installed under this contract shall be warranted against defects in design, materials and workmanship for the full warranty period which is standard with the manufacturer, but in no case less than one (1) year from the date of system acceptance.

END OF SECTION

SECTION 13972

VIBRATION AND SEISMIC CONTROLS FOR FIRE-SUPPRESSION PIPING AND EQUIPMENT

PART 1—GENERAL

1.01 WORK INCLUDED

This Section includes the following:

1. Adjust list below to suit Project.
2. Isolation pads.
3. Isolation mounts.
4. Restrained elastomeric isolation mounts.
5. Restraining braces.

1.02 DEFINITIONS

1. IBC: International Building Code.
2. ICC-ES: ICC-Evaluation Service.

1.03 PERFORMANCE REQUIREMENTS

A. SEISMIC-RESTRAINT LOADING:

See structural drawings for seismic classification.

1.04 ACTION SUBMITTALS

A. PRODUCT DATA:

For each product indicated.

B. DELEGATED-DESIGN SUBMITTAL:

For vibration isolation and seismic-restraint calculations and details indicated to comply with performance requirements and design criteria, including analysis data signed and sealed by the qualified professional engineer responsible for their preparation.

1.05 INFORMATIONAL SUBMITTALS

1. Qualification Data: For professional engineer.

2. Welding certificates.

1.06 QUALITY ASSURANCE

1. Comply with seismic-restraint requirements in the IBC and NFPA 13 unless requirements in this Section are more stringent.

2. Welding: Qualify procedures and personnel according to AWS D1.1/D1.1M, "Structural Welding Code - Steel."

3. Seismic-restraint devices shall have horizontal and vertical load testing and analysis and shall bear anchorage preapproval OPA number from OSHPD, preapproval by ICC-ES, or preapproval by another agency acceptable to authorities having jurisdiction, showing maximum seismic-restraint ratings. Ratings based on independent testing are preferred to ratings based on calculations. If preapproved ratings are not available, submittals based on independent testing are preferred. Calculations (including combining shear and tensile loads) to support seismic-restraint designs must be signed and sealed by a qualified professional engineer.

PART 2—PRODUCTS

2.01 SEISMIC-RESTRAINT DEVICES

A. AVAILABLE MANUFACTURERS:

Subject to compliance with requirements, manufacturers offering products that may be incorporated into the Work include, but are not limited to, the following:

1. Manufacturers: Subject to compliance with requirements, provide products by one of the following:

   a. Amber/Booth Company, Inc.
   b. California Dynamics Corporation.
   c. Cooper B-Line, Inc.; a division of Cooper Industries.
   d. Hilti, Inc.
   e. Kinetics Noise Control.
   f. Loos & Co.; Cableware Division.
   g. Mason Industries.
   h. TOLCO Incorporated; a brand of NIBCO INC.
   i. Unistrut; Tyco International, Ltd.

B. GENERAL REQUIREMENTS FOR RESTRAINT COMPONENTS:

Rated strengths, features, and applications shall be as defined in reports by an agency acceptable to authorities having jurisdiction.

1. Structural Safety Factor: Allowable strength in tension, shear, and pullout force of components shall be at least four times the maximum seismic forces to which they will be subjected.

C CHANNEL SUPPORT SYSTEM:

MFMA-3, shop- or field-fabricated support assembly made of slotted steel channels with accessories for attachment to braced component at one end and to building structure at the other end and other matching components and with corrosion-resistant coating; and rated in tension, compression, and torsion forces.

D. HANGER ROD STIFFENER:

Steel tube or steel slotted-support-system sleeve with internally bolted connections to hanger rod.

E. BUSHINGS FOR FLOOR-MOUNTED EQUIPMENT ANCHOR BOLTS:

Neoprene bushings designed for rigid equipment mountings, and matched to type and size of anchor bolts and studs.

F. RESILIENT ISOLATION WASHERS AND BUSHINGS:

One-piece, molded, oil- and water-resistant neoprene, with a flat washer face.

G. MECHANICAL ANCHOR BOLTS:

Drilled-in and stud-wedge or female-wedge type in zinc-coated steel for interior applications and stainless steel for exterior applications. Select anchor bolts with strength required for anchor and as tested according to ASTM E 488. Minimum length of eight times diameter.

PART 3—EXECUTION

3.01 VIBRATION-CONTROL AND SEISMIC-RESTRAINT DEVICE INSTALLATION

A. EQUIPMENT RESTRAINTS:

1. Install resilient bolt isolation washers on equipment anchor bolts where clearance between anchor and adjacent surface exceeds 0.125 inch (3.2 mm).

2. Install seismic-restraint devices using methods approved by an agency acceptable to authorities having jurisdiction providing required submittals for component.

B. PIPING RESTRAINTS:

1. Comply with requirements in MSS SP-127 and NFPA 13.

2. Space lateral supports a maximum of 40 feet (12 m) o.c., and longitudinal supports a maximum of 80 feet (24 m) o.c.

3. Brace a change of direction longer than 12 feet (3.7 m).

Install seismic-restraint devices using methods approved by an agency acceptable to authorities having jurisdiction providing required submittals for component.

Install bushing assemblies for anchor bolts for floor-mounted equipment, arranged to provide resilient media between anchor bolt and mounting hole in concrete base.

C. ATTACHMENT TO STRUCTURE:

If specific attachment is not indicated, anchor bracing to structure at flanges of beams, at upper truss chords of bar joists, or at concrete members.

D. DRILLED-IN ANCHORS:

1. Identify position of reinforcing steel and other embedded items prior to drilling holes for anchors. Do not damage existing reinforcing or embedded items during coring or drilling. Notify the structural engineer if reinforcing steel or other embedded items are encountered during drilling. Locate and avoid prestressed tendons, electrical and telecommunications conduit, and gas lines.

2. Do not drill holes in concrete or masonry until concrete, mortar, or grout has achieved full design strength.
3. Wedge Anchors: Protect threads from damage during anchor installation. Heavy-duty sleeve anchors shall be installed with sleeve fully engaged in the structural element to which anchor is to be fastened.

4. Set anchors to manufacturer's recommended torque, using a torque wrench.

5. Install zinc-coated steel anchors for interior and stainless-steel anchors for exterior applications.

3. 2 ACCOMMODATION OF DIFFERENTIAL SEISMIC MOTION

Install flexible connections in piping where they cross seismic joints, where adjacent sections or branches are supported by different structural elements, and where the connections terminate with connection to equipment that is anchored to a different structural element from the one supporting the connections as they approach equipment. Comply with requirements in Section 13-930 "Wet-Pipe Sprinkler Systems," and Section 13-9xx "Dry-Pipe Sprinkler Systems" (if used), for piping flexible connections.

END OF SECTION

SECTION 13991

SLEEVES AND SLEEVE SEALS FOR FIRE-SUPPRESSION PIPING

PART 1—GENERAL

1.01 SUMMARY

This Section includes the following:

1. Sleeves.
2. Sleeve-seal systems.
3. Grout.

1.02 ACTION SUBMITTALS

A. PRODUCT DATA:

For each type of product indicated.

B. BUY AMERICA REQUIREMENTS:

Provide “Certificate of Compliance with Buy America Requirements” in accordance with Federal Regulation 49 CFR 661.

1. Listing as an acceptable manufacturer shall not relieve the contractor from compliance with this requirement.

PART 2—PRODUCTS

2.01 SLEEVES

A. GALVANIZED-STEEL-PIPE SLEEVES:

ASTM A 53/A 53M, Type E, Grade B, Schedule 40, zinc coated, with plain ends.

2.02 SLEEVE-SEAL SYSTEMS

A. MANUFACTURERS:

Subject to compliance with requirements, available manufacturers offering products that may be incorporated into the Work include, but are not limited to, the following:

1. Advance Products & Systems, Inc.
2. CALPICO, Inc.
3. Metraflex Company (The).
4. Pipeline Seal and Insulator, Inc.
5. Proco Products, Inc.

6. Flexicraft Industries
7. Engineer Approved Equal

B. DESCRIPTION:

Modular sealing-element unit, designed for field assembly, for filling annular space between piping and sleeve.

1. Sealing Elements: EPDM-rubber interlocking links shaped to fit surface of pipe. Include type and number required for pipe material and size of pipe.
2. Pressure Plates: Stainless steel.
3. Connecting Bolts and Nuts: Stainless steel of length required to secure pressure plates to sealing elements.

2.03 GROUT

A. STANDARD:

ASTM C 1107/C 1107M, Grade B, post-hardening and volume-adjusting, dry, hydraulic-cement grout.

B. CHARACTERISTICS:

Nonshrink; recommended for interior and exterior applications.

C. DESIGN MIX:

5000-psi (34.5-MPa), 28-day compressive strength.

D. PACKAGING:

Premixed and factory packaged.

PART 3—EXECUTION

3.01 SLEEVE INSTALLATION

Install sleeves for piping passing through penetrations in floors, partitions, roofs, and walls.

. For sleeves that will have sleeve-seal system installed, select sleeves of size large enough to provide 1-inch (25-mm) annular clear space between piping and concrete slabs and walls.

1. Sleeves are not required for core-drilled holes.

Install sleeves in concrete floors, concrete roof slabs, and concrete walls as new slabs and walls are constructed.

1. Cut sleeves to length for mounting flush with both surfaces.

a. Exception: Extend sleeves installed in floors of mechanical equipment areas or other wet areas 2 inches (50 mm) above finished floor level.
   1) Using grout, seal the space outside of sleeves in slabs and walls without sleeve-seal system.

Install sleeves for pipes passing through interior partitions.

1. Cut sleeves to length for mounting flush with both surfaces.
2. Install sleeves that are large enough to provide 1/4-inch (6.4-mm) annular clear space between sleeve and pipe or pipe insulation.
3. Seal annular space between sleeve and piping or piping insulation; use joint sealants appropriate for size, depth, and location of joint. Comply with requirements for sealants specified in Section 079200 "Joint Sealants."

A. FIRE-BARRIER PENETRATIONS:

Maintain indicated fire rating of walls, partitions, ceilings, and floors at pipe penetrations. Seal pipe penetrations with firestop materials. Comply with requirements for firestopping specified in Section 078413 "Penetration Firestopping."

3.02 SLEEVE-SEAL-SYSTEM INSTALLATION

Install sleeve-seal systems in sleeves in exterior concrete walls and slabs-on-grade at service piping entries into building.

Select type, size, and number of sealing elements required for piping material and size and for sleeve ID or hole size. Position piping in center of sleeve. Center piping in penetration, assemble sleeve-seal system components, and install in annular space between piping and sleeve. Tighten bolts against pressure plates that cause sealing elements to expand and make a watertight seal.

3.03 SLEEVE AND SLEEVE-SEAL SCHEDULE

Use sleeves and sleeve seals for the following piping-penetration applications:

1. Exterior Concrete Walls above Grade:
   a. Piping Smaller Than NPS 6 (DN 150): Galvanized-steel-pipe sleeves.
   b. Piping NPS 6 (DN 150): Galvanized-steel-pipe sleeves.

2. Exterior Concrete Walls below Grade:
   a. Piping Smaller Than NPS 6 (DN 150): Galvanized-steel-pipe sleeves with sleeve-seal system.
      1) Select sleeve size to allow for 1-inch (25-mm) annular clear space between piping and sleeve for installing sleeve-seal system.
   b. Piping NPS 6 (DN 150) and Larger: Galvanized-steel-pipe sleeves with sleeve-seal system.

1) Select sleeve size to allow for 1-inch (25-mm) annular clear space between piping and sleeve for installing sleeve-seal system.

c. Concrete Slabs-on-Grade:

d. Piping Smaller Than NPS 6 (DN 150): Galvanized-steel-pipe sleeves with sleeve-seal system.

1) Select sleeve size to allow for 1-inch (25-mm) annular clear space between piping and sleeve for installing sleeve-seal system.

e. Piping NPS 6 (DN 150) and Larger: Galvanized-steel-pipe sleeves with sleeve-seal system.

1) Select sleeve size to allow for 1-inch (25-mm) annular clear space between piping and sleeve for installing sleeve-seal system.

f. Concrete Slabs above Grade: Piping Smaller Than NPS 6 (DN 150): Galvanized-steel-pipe sleeves.

g. Piping NPS 6 (DN 150) and Larger: Galvanized-steel-pipe sleeves.

3. Interior Partitions:

a. Verify, with fire authorities having jurisdiction, that PVC materials are allowed for sleeves.

b. Piping Smaller Than NPS 6 (DN 150): Galvanized-steel-pipe sleeves.

c. Piping NPS 6 (DN 150) and Larger: Galvanized-steel-sheet sleeves.

END OF SECTION

SECTION 13996

ESCUTCHEONS FOR FIRE-SUPPRESSION PIPING

PART 1—GENERAL

1.01 WORK INCLUDED

This Section includes the following:

1. Escutcheons.
2. Floor plates.

1.02 ACTION SUBMITTALS

A. PRODUCT DATA:

For each type of product indicated.

B. BUY AMERICA REQUIREMENTS:

Provide “Certificate of Compliance with Buy America Requirements” in accordance with Federal Regulation 49 CFR 661.

1. Listing as an acceptable manufacturer shall not relieve the contractor from compliance with this requirement.

PART 2—PRODUCTS

2.01 ESCUTCHEONS

A. ONE-PIECE, CAST-BRASS TYPE:

With chrome-plated finish and setscrew fastener.

B. ONE-PIECE, DEEP-PATTERN TYPE:

Deep-drawn, box-shaped brass with chrome-plated finish and spring-clip fasteners.

C. ONE-PIECE, STAMPED-STEEL TYPE:

With chrome-plated finish and spring-clip fasteners.

2.02 FLOOR PLATES

A. ONE-PIECE FLOOR PLATES:

Cast-iron flange with holes for fasteners.

PART 3—EXECUTION

3.01 INSTALLATION

Install escutcheons, in visually exposed areas, for piping penetrations of walls, ceilings, and finished floors.

Install escutcheons with ID to closely fit around pipe, tube, and insulation of piping and with OD that completely covers opening.

1. Escutcheons for New Piping:
   a. Piping with Fitting or Sleeve Protruding from Wall: One-piece, deep-pattern type.
   b. Bare Piping at Wall and Floor Penetrations in Finished Spaces: One-piece, cast-brass type with polished, chrome-plated finish.
   c. Bare Piping at Ceiling Penetrations in Finished Spaces: One-piece, cast-brass type with polished, chrome-plated finish.
   d. Bare Piping in Unfinished Service Spaces: One-piece, cast-brass type with polished, chrome-plated finish.
   e. Bare Piping in Equipment Rooms: One-piece, cast-brass type with polished, chrome-plated finish.

Install floor plates for piping penetrations of equipment-room floors.

Install floor plates with ID to closely fit around pipe, tube, and insulation of piping and with OD that completely covers opening.

1. New Piping: One-piece, floor-plate type.

3.02 FIELD QUALITY CONTROL

Replace broken and damaged escutcheons and floor plates using new materials.

END OF SECTION

SECTION 14420

JIB CRANES

PART 1--GENERAL

1.01 DESCRIPTION

A. SCOPE:

This section provides specifications for a jib crane, complete with hoist, trolley, associated drive units, controls, collector rings, switch and rails. Jib crane systems shall be used to remove submersible pumps from the Biological Basins. The jib cranes are anticipated to be used infrequently and mainly for servicing the pumping equipment or equipment replacement.

The manufacturer shall review the mechanical and structural layout drawings to familiarize themselves with the location and the set-up of the equipment specified and shall assure themselves that the equipment specified is appropriate for and coordinated with what is shown on the contract drawings. The manufacturer shall also review the relevant electrical plan and one-line diagram and the relevant process and instrumentation diagram drawing to ensure that the contract drawings are appropriate and coordinated with the equipment and controls specified.

B. TYPE:

Jib cranes shall be free-standing, floor mounted systems with 360 degree rotation. Jib cranes shall have with I-beam booms, power hoists, power trolleys and manual jib. Jib cranes shall be standard product of manufactures regularly engaged in the manufacture of jib cranes.

C. EQUIPMENT LIST:

Equipment numbers are as follows:

Item	Equipment No.
Plant Drain Pump Station Jib Crane	CRN-6013

1 1.02 PERFORMANCE REQUIREMENTS

Jib cranes shall be designed for the following requirements:

A. SERVICE CONDITIONS:

Description	Equipment Number
	CRN-6013
Area Classification	Unclassified
Location	Plant Drain PS

B. OPERATING CONDITIONS:

Description	Equipment Number
	CRN-6013
Rated Capacity, tons	1.0
Type	Foundation Mounted
Boom rotation, degrees of arc minimum	360
Boom span, feet, minimum	13
Minimum hook elevation, feet	900.50
Lift, feet, minimum	18
Base elevation, feet	882.50

C. DESIGN REQUIREMENTS:

Description	Equipment Number
	CRN-6013
Boom rotation speed, RPM	0.5
Hoist lift speed, feet per minute	
Low speed	4
High speed	16
Maximum trolly speed, feet per minute	65
Boom Rotation	
Motor Type	Constant Speed
Motor horsepower, maximum	0.5
Voltage/phase	460/3
NEMA Rating	NEMA 3R
Motor enclosure, type	TENV
Motor space heaters	No
Moisture Detection	No
Over-Temperature Protection	No

Description	Equipment Number
	CRN-6013
Hoist	
Motor Type	Two Speed
Motor horsepower, maximum	1.5
Voltage/phase	460/3
NEMA Rating	NEMA 3R
Motor enclosure, type	TENV
Motor space heaters	No
Moisture Detection	No
Over-Temperature Protection	No
Trolley	
Motor Type	Variable speed, inverter duty
Motor horsepower, maximum	0.5
Voltage/phase	460/3
NEMA Rating	NEMA 3R
Motor enclosure, type	TENV
Motor space heaters	No
Moisture Detection	No
Over-Temperature Protection	Yes
Hoist and trolley work light	Yes

D. UNIT RESPONSIBILITY:

The Contractor shall assign unit responsibility, as specified in paragraph 11000-1.02 C, to the manufacturer of the jib crane system provided under this section. A completed, signed, and notarized Certificate of Unit Responsibility (Form 11000-C, Section 01999) shall be provided.

1.03 QUALITY ASSURANCE

A. GENERAL:

All equipment furnished under this section shall comply in all respects with the requirements of OSHA, the standards of the Crane Manufacturer's Association of America (CMAA), the Hoist Manufacturer's Institute (HMI), and ANSI/ASME HST-4 Performance Standard for Electric Wire Rope Hoists.

B. REFERENCED STANDARDS:

This section contains references to the following documents. They are a part of this section as specified and modified. Where a referenced document contains references to other

standards, those documents are included as references under this section as if referenced directly. In the event of conflict between the requirements of this section and those of the listed documents, the requirements of this section shall prevail.

Unless otherwise specified, references to documents shall mean the documents in effect at the time of Advertisement for Bids or Invitation to Bid (or on the effective date of the Agreement if there were no Bids). If referenced documents have been discontinued by the issuing organization, references to those documents shall mean the replacement documents issued or otherwise identified by that organization or, if there are no replacement documents, the last version of the document before it was discontinued. Where document dates are given in the following listing, references to those documents shall mean the specific document version associated with that date, regardless of whether the document has been superseded by a version with a later date, discontinued or replaced.

Reference	Title
AISC	Manual of Steel Construction, 14th Edition
ASME HST-1	Performance Standard for Electric Chain Hoists
ASME B30.16	Overhead Hoists (Underhung) Safety Standard for Cableways, Cranes, Derricks, Hoists, Hooks, Jacks, and Slings
ASTM A276	Standard Specification for Stainless Steel Bars and Shapes
ASTM A36	Carbon Structural Steel
CMAA	Crane Manufacturers Association of America
HMI	Hoist Manufacturers Institute
OSHA	Occupational Safety and Health Administration

1.04 ENVIRONMENTAL CONDITIONS

Jib cranes shall be installed in an unclassified (per NFPA 820), outdoor location at the Little River Water Reclamation Facility. Refer to the associated environmental conditions provided in Section 01800.

1.05 SUBMITTALS

The Contractor shall provide the following submittals:

1. A copy of this specification section, with addendum updates included, and all referenced and applicable sections, with addendum updates included, with each paragraph check-marked to indicate specification compliance or marked to indicate requested deviations from specification requirements. A check mark shall denote full compliance with a paragraph as a whole. If deviations from the specifications are indicated, and therefore requested by the Contractor, each deviation shall be underlined and denoted by a number in the margin to the right of the

identified paragraph, referenced to a detailed written explanation of the reasons for requesting the deviation. The Engineer shall be the final authority for determining acceptability of requested deviations. The remaining portions of the paragraph not underlined will signify compliance on the part of the Contractor with the specifications. *Failure to include a copy of the marked-up specification sections, along with justification(s) for any requested deviations to the specification requirements, with the submittal shall be sufficient cause for rejection of the entire submittal with no further consideration.*

2. A copy of the contract document control diagrams and process and instrumentation diagrams relating to the submitted equipment, with addendum updates that apply to the equipment in this section, marked to show specific changes necessary for the equipment proposed in the submittal. If no changes are required, the drawing or drawings shall be marked "No Changes Required." *Failure to include copies of the relevant drawings with the submittal shall be cause for rejection of the entire submittal with no further review.*

3. Completed Certificate of Unit Responsibility attesting that the Contractor has assigned, and that the manufacturer accepts, unit responsibility in accordance with the requirements of this Section and paragraph 11000-1.02 C. *No other submittal material will be reviewed until the certificate has been received and found to be in conformance with these requirements.*

4. Manufacturer's catalog data confirming rated capacity, equipment speeds, horsepower electrical requirements, and component sizes and dimensions.

5. Motor data in accordance with Section 11060.

6. Electrical diagrams and schematics.

7. Operations and maintenance information as specified in Section 01730.

8. Anchorage design/ anchor bolt calculations in accordance with paragraph 05501.

PART 2--PRODUCTS

2.01 ACCEPTABLE PRODUCTS

The Owner and Engineer believe the following candidate manufacturers are capable of producing equipment and/or products that will satisfy the requirements of this section. This statement, however, shall not be construed as an endorsement of a particular manufacturer's products, nor shall it be construed that named manufacturers' standard equipment or products will comply with the requirements of this section. Jib cranes shall be Gorbel, P&H, or equal, modified as necessary to meet the requirements of this section.

2.01 MATERIALS

Classifier materials shall be as follows:

Component	Material
Runway boom and mast	Steel, ASTM A36
Mounting plates	Steel, ASTM A36
Trolleys, wheels, hook	Steel, ASTM A36 (unclassified areas) Bronze (classified areas)
Wire rope	Steel (unclassified areas) Stainless steel (classified areas)

Materials specified are considered the minimum acceptable for the purposes of durability, strength, and resistance to erosion and corrosion. The Contractor may propose alternative materials for the purpose of providing greater strength or to meet required stress limitations. However, alternative materials must provide at least the same qualities as those specified for the purpose.

2.02 EQUIPMENT

A. JIB CRANE

The jib crane cantilever boom shall be constructed of heavy section I-beam with trolley stops at both ends. Tie-rods and knee braces will not be permitted. Head assembly shall have tapered roller bearings in top pivot and trunnion assemblies in lower portion.

B. ANCHORAGE

The Contractor shall cause the jib crane supplier to be responsible for the design of the anchor bolting system for each crane furnished in this Section. Anchor bolts and connecting bolts for all assemblies supported as furnished under this Section shall be designed in accordance with Sections 05501.

C. HOIST AND TROLLEY:

Trolley wheels shall be hardened steel, mounted on permanently lubricated antifriction bearings. The trolleys shall be motorized and shall be designed for lug connection of the hoist.

Hoist shall be close headroom. The hoisting drums shall be grooved and designed for one layer of wire rope. Hoist gearing shall be heat-treated hardened steel, running in an oil bath. Gear bearings shall be the oil-lubricated antifriction type, and all bearings shall be designed for a Class H1 bearing life.

The hoist shall contain an automatic electromechanical type brake designed for long life and positive stopping. The hoist shall contain two brakes designed for long life and positive stopping. One brake shall stop the motor rotation. A second “load brake” shall be applied automatically on lowering and require the motor to drive the load down. Both motor and

mechanical load brakes shall be capable of holding 125 percent of load independently of each other.

A geared upper and lower limit switch and a plugging upper limit switch shall be provided to assure safe operation and positive stopping under all conditions. The geared limit switch shall automatically stop the motor and engage the hoist brake when the hook reaches either it's upper or lower limit of travel. The hoist shall be provided with a load-limiting device adjusted to 110 percent of rated capacity.

Each load hook shall be mounted on ball thrust bearings to swivel without twisting the wire rope. The lifting tackle shall be of the safety type, and the hooks shall be of hardened steel equipped with a safety catch. Sheaves shall be properly guarded and shall be heavy pattern, deep flanged and properly grooved. Sheaves shall be either bronzed bushed or fitted with ball bearings and supported on fixed pins.

D. DRIVE UNIT:

Motors shall be special purpose 1750 rpm, 460 volt, 3 phase, totally enclosed, non-ventilated (TENV) specially designed for hoist service and provided with an inching circuit. Brakes shall be solenoid actuated. Hoist motor bearings shall be grease lubricated.

Trolley motions shall be through reversible electric motor. Trolley motors shall drive the trolley through enclosed gear reducers with dual output shafts to solid rubber tire driving wheels spring mounted on the underside of the monorail. Gear reducers shall be enclosed heavy-duty helical type, of a self-lubricating design with antifriction bearings.

E. CONTROL:

Control of all motions shall be from a pushbutton pendant suspended from the trolley. Hoist control shall be by a single, multiple detent pushbuttons for each direction plus an emergency stop pushbutton (mainline contactor). Trolley motion control shall be by multiple detent pushbuttons for each direction. All controls shall be clearly marked with etched or engraved nameplates. The pendant shall be attached to a retractable cable which will allow it to be raised above head level when the hoist is not in use and which will allow the pendant to be held in the hand during hoist operation.

F. LABELING:

Two sets of engraved labels shall be provided for each crane or hoist. The crane or hoist itself shall be labeled with the Equipment Number; operating parameters of paragraph 1.01 E.; and any additional information required by CMMA or HMI. The second identical label shall be mounted at a visible floor level location as directed by the Construction Manager.

G. COATING:

Jib crane and its metallic parts and appurtenances shall be coated per Coat Spec E-2 per Section 09900.

2.03 PRODUCT DATA

The following information shall be provided in accordance with the product data requirements of Section 01300:

1. Operating and maintenance information in accordance with Section 01730.

2. Installation Certification Form 11000-A.

3. Instruction Certification Form 11000-B.

PART 3--EXECUTION

Manufacturer shall test the equipment in accordance with industry standards and federal regulations prior to shipment of the equipment. The jib, trolley, and hoist shall be completely assembled and no load run tested prior to shipment to the job site. Jib crane hoist shall be disassembled to the least amount possible for shipment. The trolley and hoist shall be installed at the location shown and in accordance with the manufacturer's recommendations.

The jib crane system shall be installed and tested by the Contractor with the assistance of a factory-trained representative. The installation shall be certified on Form 11000-A specified in Section 01999.

3.02 TESTING

After completion of installation, the jib crane, the trolley and hoist shall be completely load tested to 100 percent of rated capacity to ensure compliance with the performance requirements as specified. As a minimum, testing shall be operating the equipment through a complete lift and lowering cycle and through a complete travel of the monorail to determine that the equipment performs smoothly and safely without failure. Such tests shall be carried out with the hoisting equipment loaded as near to the specified capacity as possible. Any defects shall be corrected or replaced immediately by the Contractor and at no expense to the Owner. All testing and the costs of all required certification shall be at the Contractor’s expense.

3.03 TRAINING

The Contractor shall provide the services of a factory-trained manufacturer’s representative to provide training of the Owner’s personnel in the proper operation and maintenance of the equipment.

Prior to final acceptance, the Contractor shall furnish the Engineer with two copies of the manufacturer’s certifications (Form 11000-B of Section 01999). Training shall be performed in accordance with Section 01730.

3.04 MANUFACTURER’S REPRESENTATIVE

The Contractor shall include in his bid all costs associated with providing the services of the manufacturer’s field representative for checking, aligning testing, placing in operation, and Owner training.

3.05 USE BY CONTRACTOR

Any hoist used by the Contractor shall be repaired, repainted and otherwise refurbished to like-new condition prior to its acceptance. The Contractor assumes all responsibility for operation and maintenance until the monorail and hoist has been accepted.

END OF SECTION

SECTION 14611

MONORAIL AND HOIST

PART 1--GENERAL

1.01 DESCRIPTION

A. SCOPE:

This section specifies a monorail system complete with hand operated hoist, geared trolley, for installation at the Little River Water Reclamation Facility to remove the main submersible pumps which are housed in an enclosed building with a corrosive and hazardous environment. The monorail is anticipated to be used infrequently and mainly for servicing the pumping equipment or equipment replacement.

B. TYPE:

The units shall be under-hung, close headroom, single girder monorail. Hoists shall be of the heavy-duty, hand operated with geared driven trolley. The trolleys shall be four wheel type geared with tracks and appurtenances.

C. EQUIPMENT LIST:

Equipment numbers are as follows:

Item	Equipment No.
Influent Pump Station Monorail and Hoist	CRN-2024

1.02 QUALITY ASSURANCE

A. REFERENCES

This section contains references to the following documents. They are a part of this section as specified and modified. Where a referenced document contains references to other standards, those documents are included as references under this section as if referenced directly. In the event of conflict between the requirements of this section and those of the listed documents, the requirements of this section shall prevail.

Unless otherwise specified, references to documents shall mean the documents in effect at the time of Advertisement for Bids or Invitation to Bid (or on the effective date of the Agreement if there were no Bids). If referenced documents have been discontinued by the issuing organization, references to those documents shall mean the replacement documents issued or otherwise identified by that organization or, if there are no replacement documents, the last version of the document before it was discontinued. Where document dates are given in the following listing, references to those documents shall mean the specific document version associated with that date, regardless of whether the document has been superseded by a

version with a later date, discontinued or replaced.

Reference	Title
ANSI/ASME HST-4	Performance Standard for Electric Wire Rope Hoists
CMAA	Crane Manufacturer's Association of America
HMI	Hoist Manufacturer's Institute

All equipment furnished under this section shall comply in all respects with the requirements of OSHA, the standards of the Crane Manufacturer's Association of America (CMAA), the Hoist Manufacturer's Institute (HMI), and ANSI/ASME HST-4 Performance Standard for Electric Wire Rope Hoists.

B. MANUFACTURER'S QUALIFICATIONS:

The monorail and hoist manufacturer shall be one who is regularly engaged in the business of designing, building, and repairing monorail and hoists of the type specified in this section. All monorail components and appurtenances furnished for this contract shall be designed, coordinated and supplied by a single manufacturer.

C. PERFORMANCE AND DESIGN REQUIREMENTS:

All equipment provided under this section shall be suitable for Class-A, L4, N1 of service as defined by CMAA standards with the heavy-duty hoist suspended from its trolley.

Monorail beams, complete with connections to the structural support systems, splices and runway stops, shall be furnished by the crane manufacturer. Monorail beam shall be designed by a registered civil or structural engineer in accordance with the hoist manufacturer's recommendations. Load bearing connections shall be provided at each beam or girder and where necessary to limit deflection to less than 1/450 of span.

Load carrying parts, except structural members and hoisting ropes, shall be designed so that the calculated static stress in the material, based on rated bond, shall not exceed 20 percent of the assumed ultimate strength of the material. Structural members shall be designed in accordance with the latest edition of the CMAA specifications. The rated capacity load plus the weight of the bottom block divided by the number of parts of hoisting rope shall not exceed 20 percent of the published breaking strength of the rope.

The hoists shall be manual with chain operator and trolleys shall be geared operated with chain.

D. OPERATING REQUIREMENTS:

Operating requirements shall be as follows:

Parameter	CRN-2024
Capacity, tons	1
Vertical lift, feet	38
Lift	True vertical lift
Environment	Corrosive and Hazardous, Class I Div 1
Hoist and trolley Controller Type	Manual

Hook approach distances and high hook position shall be as shown on the drawings. The Contractor is advised to examine the drawings for interferences and obstructions which might impose additional limitations upon the equipment.

1.03 SUBMITTALS

The Contractor shall provide the following submittals:

1. A copy of this specification section, with addendum updates included, and all referenced and applicable sections, with addendum updates included, with each paragraph check-marked to indicate specification compliance or marked to indicate requested deviations from specification requirements. A check mark shall denote full compliance with a paragraph as a whole. If deviations from the specifications are indicated, and therefore requested by the Contractor, each deviation shall be underlined and denoted by a number in the margin to the right of the identified paragraph, referenced to a detailed written explanation of the reasons for requesting the deviation. The Engineer shall be the final authority for determining acceptability of requested deviations. The remaining portions of the paragraph not underlined will signify compliance on the part of the Contractor with the specifications. *Failure to include a copy of the marked-up specification sections, along with justification(s) for any requested deviations to the specification requirements, with the submittal shall be sufficient cause for rejection of the entire submittal with no further consideration.*.

2. Operations and maintenance information as specified in Section 01730.

3. Anchor bolt calculations in accordance with paragraph 05501.

1.05 PROJECT/SITE CONDITIONS

Unless otherwise specified, equipment and materials shall be sized and derated for the ambient conditions specified in Section 01800. Across all specified conditions, the equipment shall perform without exceeding the manufacturer's stated tolerances.

PART 2--PRODUCTS

2.01 ACCEPTABLE PRODUCTS

Monorail hoist shall be P&H, Yale Lift Tech's Shaw-Box product series, ACCO –Wright Products or equal, modified as necessary to meet the requirements of this section.

2.02 MATERIALS

Component	Material
Runway beam	Steel, ASTM A36
Bottom tees	Manganese steel, 225 Brinell hardness
Trolleys, wheels, hook	Bronze
Wire rope	Stainless steel

2.03 EQUIPMENT

A. MONORAIL BEAM:

Monorail beam shall be specially fabricated composite beams comprised of top flange, web and hardened steel bottom tee section, continuously welded to the web. The bottom tee shall be shaped to provide a running surface for the end trucks.

B. END TRUCK:

The monorail end truck shall carry the rated load between the end truck wheels while the rated load is lifted at one end of the monorail. End truck wheel bases shall be 1/8 of the span or greater.

A rubber bumper shall be mounted on each end of the end truck. Safety lugs shall be provided to limit drop of the end truck to 1 inch or less in the event of wheel or axle failure.

Bearings shall be fitted with seals to exclude dust and moisture and shall be lubricated for life.

Wheels shall be alloy steel or cast iron with tread surfaces hardened to 375 to 425 Brinell. Axles and wheels shall be removable without disturbing other truck elements.

C. TROLLEY:

Trolley wheels shall be hardened steel, mounted on permanently lubricated antifriction bearings. The trolleys shall be geared and shall be designed for lug connection of the hoist.

D. HOIST:

Hoist shall be close headroom. The hoisting drums shall be grooved and designed for manual lift. Hoist gearing shall be heat-treated hardened steel, running in an oil bath. Gear bearings shall be the oil-lubricated antifriction type, and all bearings shall be designed for a Class M2 (20,000 hour bearing life.

Each load hook shall be mounted on ball thrust bearings to swivel without twisting the wire rope. The lifting tackle shall be of the safety type, and the hooks shall be of hardened steel equipped with a safety catch. Sheaves shall be properly guarded and shall be heavy pattern, deep flanged and properly grooved. Sheaves shall be either bronzed bushed or fitted with ball bearings and supported on fixed pins.

2.04 PRODUCT DATA

The following information shall be provided:

1. Operating and maintenance information in accordance with Section 01730.

2. Factory tested certification.

3. Installation Certification Form 11000-A.

4. Instruction Certification Form 11000-B.

PART 3--EXECUTION

3.01 INSTALLATION

Manufacturer shall test the equipment in accordance with industry standards and federal regulations prior to shipment of the equipment. The monorail, trolley, and hoist shall be completely assembled and no load run tested prior to shipment to the job site. Monorail hoist shall be disassembled to the least amount possible for shipment. The trolley and hoist shall be installed at the location shown and in accordance with the manufacturer's recommendations.

The monorail system shall be installed and tested by the Contractor with the assistance of a factory-trained representative. The installation shall be certified on Form 11000-A specified in Section 01999.

3.02 TESTING

After completion of installation, the monorail hoist, trolley, and hoist shall be completely tested to ensure compliance with the performance requirements as specified. As a minimum, testing shall be by operating the equipment through a complete lift and lowering cycle and through a complete travel of the monorail to determine that the equipment performs smoothly and safely without failure.

Such tests shall be carried out with the hoisting equipment loaded as near to the specified capacity as possible. Any defects shall be corrected or replaced immediately by the Contractor and at no expense to the Owner. Final OSHA inspection, load tests, all other testing, and certification shall be at the Contractor's expense.

3.03 TRAINING

The Contractor shall provide the services of a factory-trained manufacturer’s representative to provide training of the Owner’s personnel in the proper operation and maintenance of the equipment. A minimum of two training sessions shall be provided.

Prior to final acceptance, the Contractor shall furnish the Engineer with two copies of the manufacturer’s certifications (Form 11000-B of Section 01999). Training shall be performed in accordance with Section 01730.

3.04 MANUFACTURER’S REPRESENTATIVE

The Contractor shall include in his bid all costs associated with providing the services of the manufacturer’s field representative for checking, aligning testing, placing in operation, and Owner training.

3.05 USE BY CONTRACTOR

Any hoist used by the Contractor shall be repaired, repainted and otherwise refurbished to like-new condition prior to its acceptance. The Contractor assumes all responsibility for operation and maintenance until the monorail and hoist has been accepted.

END OF SECTION

SECTION 14630

BRIDGE CRANES AND HOISTS

PART 1--GENERAL

1.01 DESCRIPTION

A. SCOPE:

This section provides specifications for bridge cranes including hoists, trolleys, and associated drive units and controls. CRN-5011 will be used for pulling membrane blowers and permeate pumps from the Process Mechanical Room. CRN-5012 will be used for pulling membranes.

B. TYPE:

The unit shall be an under-hung or top-running single girder bridge crane, as specified in drawings, CMAA Class A service type. Hoists shall be wire rope type, HMI Class H3 service, and the trolley shall be the bottom running type. Design shall conform to requirements in the referenced standards and Operating Requirements paragraph 14630-1.02 B.

Runway beams, complete with connections to the supporting structural system, and any required splices shall be supplied and erected by the Contractor as shown on the contract drawings.

C. EQUIPMENT LIST:

Equipment numbers are as follows:

Location	Item	Equipment No.
Treatment Building – Process Mechanical Room	Bridge crane, hoist and trolley	CRN-5011
Treatment Building – Membrane Area	Bridge crane, hoist and trolley	CRN-5012

1.02 QUALITY ASSURANCE

A. UNIT RESPONSIBILITY:

The Contractor shall assign unit responsibility in accordance with paragraph 11000-1.02 C to the bridge crane and hoist manufacturer for all equipment specified in this section. Nothing in this provision, however, shall be construed as relieving the Contractor of overall responsibility for this portion of the Work.

The crane manufacturer shall be one who is regularly engaged in the business of designing, building, and repairing bridge cranes of the type specified in this section. All bridge

crane components and appurtenances furnished for this contract shall be designed, coordinated, and supplied by a single manufacturer. The Contractor shall be responsible for ensuring the proper components are incorporated in the package and that the requirements of other specification sections referenced are satisfied.

B. OPERATING REQUIREMENTS:

Operating requirements shall be as follows:

Equipment number	CRN-5011	CRN-5012
Location	Indoors	Outdoors
Capacity, tons	3	5
Hoist type	2-part, double reeved	2-part, double reeved
Span, feet	See drawings	See drawings
Minimum hook height	See drawings	See drawings
Hook approach	See drawings	See drawings
Lift required, feet	15 (see drawings)	45 (see drawings)
Hoist speed, fpm, approximate	Variable, 3 through 24[b]	Variable, 3 through 16[b]
Runway length, feet	See drawings	See drawings
Approximate trolley speed, fpm	Variable, 15 through 50[b]	Variable, 15 through 50[b]
Approximate bridge speed, fpm	Variable, 25 through 75[b]	Variable, 25 through 75[b]
Hoist motor horsepower	5 minimum	7.5 minimum
Trolley motor horsepower[b]	½ minimum	½ minimum
Bridge motor horsepower[b]	½ minimum	½ minimum
Electrical power, volts/phase/Hz	460/3/60	460/3/60
Outdoor, exposed operation. Windspeed, mph	N/A	90[c]
Maximum runway crane rail size	40# ASCE	40# ASCE

[a] See Section 01800 for environmental conditions.
[b] Indicates variable speed
[b] May be either single or dual drive.
[c]. Provide electric (automatic) parking brake.

The Contractor is advised to carefully examine the drawings for interferences and obstructions that might impose additional limitations upon the equipment.

C. REFERENCES:

This section contains references to the following documents. They are a part of this section as specified and modified. Where a referenced document contains references to other standards, those documents are included as references under this section as if referenced directly. In the event of conflict between the requirements of this section and those of the listed documents, the requirements of this section shall prevail.

Unless otherwise specified, references to documents shall mean the documents in effect at the time of Advertisement for Bids or Invitation to Bid (or on the effective date of the Agreement if there were no Bids). If referenced documents have been discontinued by the issuing organization, references to those documents shall mean the replacement documents issued or otherwise identified by that organization or, if there are no replacement documents, the last version of the document before it was discontinued. Where document dates are given in the following listing, references to those documents shall mean the specific document version

associated with that date, regardless of whether the document has been superseded by a version with a later date, discontinued or replaced.

Reference	Title
ASTM A492	Stainless Steel Wire Rope
ASTM A555	General Requirement for Stainless Steel Wire and Wire Rods
ASTM A580	Stainless Steel Wire
ASTM A1023	Stranded Carbon Steel Wire Ropes for General Purposes
RR-W-410E	Federal Specification, Wire Rope and Strand
WRTP	Wire Rope Technical Board
OSHA	Occupational Safety and Health Administration
CMAA	Crane Manufacturer's Association of America
HMI	Hoist Manufacturer's Institute
AISC	Manual of Steel Construction, 9th Edition
IBC	2001 International Building Code, locally amended

1.03 ENVIRONMENTAL CONDITIONS

All cranes will be installed indoors or outdoors at a municipal wastewater treatment facility, as specified. See Specification 01800 for a description of operating conditions.

1.04 SUBMITTALS

The following information shall be provided in accordance with section 01300.

1. A copy of this specification section, with addendum updates included, and all referenced and applicable sections, with addendum updates included, with each paragraph check-marked to indicate specification compliance or marked to indicate requested deviations from specification requirements. Check marks (✓) shall denote full compliance with a paragraph as a whole. If deviations from the specifications are indicated, and therefore requested by the Contractor, each deviation shall be underlined and denoted by a number in the margin to the right of the identified paragraph, referenced to a detailed written explanation of the reasons for requesting the deviation. The Construction Manager shall be the final authority for determining acceptability of requested deviations. The remaining portions of the paragraph not underlined will signify compliance on the part of the Contractor with the specifications. Failure to include a copy of the marked-up specification sections, along with justification(s) for any requested deviations to the specification requirements, with the submittal shall be sufficient cause for rejection of the entire submittal with no further consideration.

2. Certificate of Unit Responsibility attesting that the Contractor has assigned unit responsibility in accordance with the requirements of this section and paragraph 11000-1.02 C*. No other submittal material will be reviewed until the certificate has been received and found to be in conformance with these requirements.*

3. Manufacturer's proposed warranty as specified.

4. Design calculations verifying drive and hoists' horsepower; braking and energy dissipation requirements; end-stop bumper energy dissipation and maximum force; bridge deflections; need for rail clamps (or not); and structural loading on runway. Specific calculations for operation and deflections due to wind shall be included, as applicable. Calculations shall be sealed by a Georgia registered Professional Engineer.

5. Detailed wheel loadings on the runway system including number and spacing of wheels, number of end trucks or drive units, and end truck spacing.

6. Shop drawings showing clearance dimensions and details of construction, including general arrangement, runway, crane rail and its attachments, complete bridge crane, electrical wiring diagram, cable(s), near-hatch retention device, cable lifting devices and associated hardware, and all product data for installation of the hoists. Shop drawings shall be prepared and assembled by the listed manufacturers. Shop drawings prepared and assembled by manufacturer's sales representatives, fabrication shops, or anyone besides the listed manufacturers will not be accepted.

7. Material specifications and mill certificates for bridge components.

8. Manufacturer's cut sheets or other descriptive literature for motors, bearings, mechanical and electrical components proposed for incorporation into the crane.

9. Structural calculations for bridge crane, signed and sealed by a professional engineer registered in the State of Georgia.

10. Operation and maintenance (O&M) manuals shall be provided in accordance with the requirements of Section 01730. O&M manuals shall be provided prior to delivery of the equipment.

11. Furnish check marked copy of relevant contract mechanical and structural drawings shall be provided with all changes noted on these drawings for compliance.

12. Motor submittal data as specified in Section 11060.

PART 2--PRODUCTS

2.01 ACCEPTABLE PRODUCTS

The Owner and Engineer believe the following manufacturers are capable of producing equipment and/or products that will satisfy the requirements of this Section. This statement, however, shall not be construed to mean that the named manufacturer's standard product will comply with the requirements of this Section. Manufacturer shall be ACCO-Wright or P&H, Yale, modified to provide the specified features and to satisfy the specified operating requirements.

2.02 MATERIALS

Component	Material
Runway beams	See drawings
Bridge beams and trolley	Steel, ASTM A36, ASTM A572 Gr50, ASTM A992, or equivalent grades in plate materials.
Hoist gearing, trolley wheels, end truck wheels, hook	Steel, see below in specification.
Hoist cable and hardware	RR-W-410E, except use stainless steel Type 316

2.03 EQUIPMENT

A. RUNWAY BEAMS:

Runway beams and connections to supports shall be as shown on the drawings.

B. CRANE RAIL:

Crane rail, including stops and attachment to runway beams, shall be designed by the crane manufacturer. Rail shall be standard ASCE shape, maximum 40 pound/yard.

C. BRIDGES:

Each bridge shall consist of main girders which shall support the trolley, hoist, walkway, auxiliary hoist, and associated mechanisms. The bridge beams shall be rigidly attached to the end trucks and shall be braced and welded to maintain squareness with the trucks. Permanent stops shall be provided to prevent trolley over-run. The bridge shall be motorized.

D. END TRUCKS:

The bridge crane end trucks shall carry the rated load between the end truck wheels while the rated load is lifted at one end of the crane bridge. End trucks shall have steel wheels hardened to 375 to 425 Brinell mounted on lifetime lubricated antifriction bearings fitted with seals to exclude dust and moisture. Wheel bases shall be 1/8 of the span or greater. Axles and wheels shall be removable without disturbing other truck elements.

An energy absorbing rubber bumper shall be mounted on each end of each end truck. Bumper shall limit longitudinal runway stopping forces to not exceed AISC longitudinal tractive force. Safety lugs shall be provided to limit drop of the end truck to 1 inch or less in the event of wheel or axle failure.

Rail clamps shall be provided if required by wind load calculations. Design wind for clamping forces shall conform to the IBC for crane location.

E. BRIDGE DRIVE:

Bridge drive may be either single or dual motor type. Single motor shall be center-mounted with a drive shaft supported on antifriction bearing pillow blocks spaced at 10-foot maximum intervals. Maximum torsional twist angle in the drive shaft, when referenced to the drive wheels of the crane, shall not exceed 1 degree of wheel rotation under rated load regardless of load location.

Motors shall be reversible and shall be designed for crane service. If a dual motor system is used, then the operation of the end trucks shall be synchronized to assure even bridge travel without binding, jerking, or excessive vibration. Each gear-motor assembly shall be provided with an electric brake rated at 100 percent of full load motor torque.

Bridge drive(s) shall be provided with an acceleration control module to provide smooth acceleration and load control.

F. TROLLEY WITH MAIN WINCH:

Trolley wheels shall be hardened steel mounted on permanently lubricated antifriction bearings. The trolley shall be motorized and shall be designed for top running hoist application, with an AC disc type trolley brake.

G. HOISTS AND WINCH:

1. GENERAL: Provide geared upper and lower limit switches, plugging upper limit switches, and mechanical load brakes to assure safe operation and positive stopping under all conditions. The geared limit switch shall automatically stop the motor and engage the hoist brake when the hook reaches either its upper or lower limit of travel. Winch and hoist shall be provided with an overload cutoff device.

2. MAIN HOIST/WINCH: Main hoist/winch mounted on trolley shall be of single, or double line reeving, with double reeving providing true vertical lift. Drum shall be grooved to hold the entire cable lift-length in a single layer.

Winch and hoist shall utilize energy dissipating regenerative braking system. Provide calculations justifying design. Winch and hoist shall contain an automatic electromechanical type discmotor brake designed for long life and positive stopping.

H. MAIN WINCH LOAD CABLE:

Main winch shall be equipped with type 316 stainless steel load cable with breaking strength five times rated load capacity. If single reeved (single load cable) arrangement is proposed, cable shall be rotation resistant wire rope.

The ratio of the drum diameter to the type of the stainless steel cable diameter shall be according to CMAA and WRTP recommendations.

I. DRIVE UNITS:

Motors shall be inverter duty TEFC or TENV, Class F insulation, 1750 rpm, 460-volt, 3-phase and be specially designed for Class A and H3 crane service. Hoist controls shall be variable speed type with speeds within the range indicated under the operating requirements. Bridge and trolley motion shall be through reversible, variable-speed electrical motors.

Bridge and trolley motors shall drive the bridge and trolley through enclosed gear reducers with final reduction open gearing. Gear reducers shall be enclosed heavy-duty helical and spur type, of a self-lubricating design with antifriction bearings. Brakes shall be solenoid actuated. The hoist motor bearings shall be grease lubricated and shall be designed for a 10,000-hour bearing life.

J. ELECTRIFICATION AND CONTROLS:

Electrification of the bridge shall be by insulated open-phase conductors, using spring loaded wire collectors. Conductors shall be complete with all necessary insulation, supports and appurtenances as required. The crane shall be provided with a NEMA 4X (type 316 stainless steel) rated control panel mounted on the trolley. The control panel shall contain the motor controllers and a main breaker. The main breaker shall be provided with a lockable disconnect switch. Crossbridge electrification shall be flat cable festooned type supported in an enclosed track.

Control of all motions shall be from a pushbutton pendant suspended from the trolley. Hoist control shall be by a single, multiple detent push button for each direction plus an emergency stop pushbutton (mainline contactor). Bridge and trolley motion control shall be by dual detent pushbuttons, one for each direction. Pendant shall be a NEMA 12 rated enclosure.

All controls shall be clearly marked with etched or engraved nameplates. The pendant shall be attached to a retractable cable which will allow it to be raised above head level when the hoist is not in use and which will allow the pendant to be held in the hand during hoist operation. Pendant shall be independently traveling on festoon track.

K. MOTOR WINDING HEATERS:

Provide motor winding heaters for all drive and hoist motors to allow operation at lowest winter temperatures and prevent condensation buildup between operations.

2.04 LABELS

Each system component shall be labeled for identification by the Contractor using name tags and name plates as specified in specification Section 11000 and the identification numbers given in Division 13.

2.05 SIGNS

Identification signs and accident prevention and warning signs shall be furnished and installed by the Contractor as specified in Section 11000 and 10426.

2.06 PAINTING

Each system component shall be painted by the Contractor in accordance with specification Sections 09900 and 11000. Manufacturer prime coats shall be suitable for use with the specified finish coats. Touch-up paint and instructions shall be provided by the manufacturer.

2.07 SPARE PARTS AND SPECIAL TOOLS

Spare parts and any special tools required for disassembly or maintenance shall be provided in accordance with specification Section 11000. One complete set of the manufacturer's standard spare parts for each component size shall be provided by the manufacturer and stored by the Contractor in accordance with paragraph 11000-2.12. Provide minimum of one spare cable assembly.

2.08 PRODUCT DATA

The following information shall be provided for all new equipment as indicated:

1. Three copies of the manufacturer's written installation details and instructions shall be provided prior to delivery of the equipment. Templates required for equipment anchor bolt locations shall be provided by the manufacturer to the Contractor prior to placement of concrete.

2. Three copies of Installation Certification Form 11000-A shall be provided prior to any testing of the equipment.

3. Three copies of Training Certification Form 11000-B shall be provided immediately after completion of training.

4. Manufacturers' executed warranty.

5. Applicable operation and maintenance information as specified in Section 01730.

6. Motor data as specified in Section 11060.

PART 3--EXECUTION

3.01 SHIPPING, DELIVERY, AND STORAGE

Equipment shall be handled as described in specification Sections 01605 and 11000. Factory tests in accordance with HMI and CMAA standards shall be performed by the manufacturer prior to delivery in order to verify accuracy and performance of the systems as specified. The manufacturer shall certify and provide copies of the tests and warranty the equipment's performance specified in this section.

Units shall be packaged in reinforced containers so as to prevent rust or damage during delivery. All connections shall be capped for shipping and while in storage. Each system and all components and mounting hardware shall be delivered at the same time.

3.02 INSTALLATION, TESTING AND COMMISSIONING

A. INSTALLATION:

The Contractor shall install the complete systems in the general arrangement and where shown on the Drawings and as specified. The Contractor shall install and test each complete system and each system component in strict conformance with the manufacturer's written recommendations. Installation shall be performed by mechanics skilled in work of this kind. The equipment shall be checked, aligned, and approved for start-up by the manufacturer's factory trained representatives. Each system component shall be reviewed and approved by the applicable manufacturer prior to start-up of the complete system. The manufacturer having unit responsibility shall arrange and coordinate such reviews between component manufacturers and the Contractor.

B. TESTING:

The Contractor shall arrange and schedule field testing and commissioning with the Construction Manager. The manufacturers of unit responsibility shall fill out and submit three copies of Form 11000-A in specification Section 01999 to the Construction Manager through the Contractor. Installation, testing, and commissioning shall be carried out in accordance with specification Section 01660.

After completion of installation, the bridge crane, trolley, and hoist shall be completely tested to ensure compliance with the performance requirements as specified. As a minimum, testing shall be by operating the equipment through two complete lift and lowering cycles of a pump or representative load, and through five complete traverses of the bridge and five traverses of the runway beams to determine that the equipment performs smoothly and safely without failure. Such tests shall be carried out with the hoisting equipment loaded at 125 percent of specified capacity. After load testing, the overload limit switch is to be reset at the rated load. Any defects shall be corrected or replaced immediately by the Contractor and at no expense to the Owner. All testing and the costs of all required certification shall be at the Contractor's expense.

3.03 TRAINING

The Contractor shall provide the services of a factory-trained manufacturer's representative to provide a minimum of 8 hours of training for Owner's personnel in the proper operation and maintenance of the equipment. Particular training attention shall be focused on attaching the main winch cable to the drum and commencing lift, and shall not constitute testing specified elsewhere. Prior to final acceptance, the Contractor shall furnish the Construction Manager with three copies of the manufacturer's certifications (Form 11000-B of specification Section 01999). Training shall be performed in accordance with specification Section 01664.

3.04 MANUFACTURER'S REPRESENTATIVE

The Contractor shall include in his bid all costs associated with providing the services of the manufacturer's field representative for checking, aligning, testing, placing in operation, and training for two 8-hour days minimum.

3.05 MANUFACTURER'S WARRANTY

The Contractor shall procure and provide copies of the certified manufacturer's warranty in accordance with specification Section 11000. The complete system, including accessories and components, shall be warranted for a minimum of 3 years from the date of substantial completion of the project by the manufacturer having unit responsibility.

3.06 USE BY CONTRACTOR

The Contractor shall not use cranes specified in this section to perform any of the Work for this Contract after Testing, Commissioning and acceptance by the Owner.

END OF SECTION

SECTION 15050

PIPING SYSTEMS

PART 1--GENERAL

1.01 DESCRIPTION

A. SCOPE:

This section specifies systems of process piping and general requirements for piping systems. Detailed specifications for the components listed on the Piping System Specification Sheets are found in other sections of Division 15. This section shall be used in conjunction with those sections.

B. DEFINITIONS:

Pressure terms used in Section 15050 and elsewhere in Division 15 are defined as follows:

1. Maximum: The greatest continuous pressure at which the piping system operates.

2. Test: The hydrostatic pressure used to determine system acceptance.

1.02 QUALITY ASSURANCE

A. REFERENCES:

This section contains references to the following documents. They are a part of this section as specified and modified. Where a referenced document contains references to other standards, those documents are included as references under this section as if referenced directly. In the event of conflict between the requirements of this section and those of the listed documents, the requirements of this section shall prevail.

Unless otherwise specified, references to documents shall mean the documents in effect at the time of Advertisement for Bids or Invitation to Bid (or on the effective date of the Agreement if there were no Bids). If referenced documents have been discontinued by the issuing organization, references to those documents shall mean the replacement documents issued or otherwise identified by that organization or, if there are no replacement documents, the last version of the document before it was discontinued. Where document dates are given in the following listing, references to those documents shall mean the specific document version associated with that date, regardless of whether the document has been superseded by a version with a later date, discontinued or replaced.

Reference	Title
AASHTO M36/M36M	Metallic (Zinc or Aluminum) Coated Corrugated Steel Culverts and Underdrains
ANSI A13.1	Scheme for the Identification of Piping Systems

Reference	Title
ANSI B1.20.1	Pipe Threads, General Purpose (Inch)
ANSI B16.1	Cast Iron Pipe Flanges and Flanged Fittings Class 25, 125, 250, and 800
ANSI B16.3	Malleable Iron Threaded Fittings Class 150 and 300
ANSI B16.5	Pipe Flanges and Flanged Fittings
ANSI B16.9	Factory-Made Wrought Steel Buttwelding Fittings
ANSI B16.11	Forged Steel Fittings, Socket Welding and Threaded
ANSI B16.12	Cast Iron Threaded Drainage Fittings
ANSI B16.22	Wrought Copper and Copper Alloy Solder Joint Pressure Fittings
ANSI B16.26	Cast Copper Alloy Fittings for Flared Copper Tubes
ANSI B31.1	Power Piping
ANSI B31.3	Chemical Plant and Petroleum Refinery Piping
ASME Section IX	Boiler and Pressure Vessel Code; Welding and Brazing Qualifications
ASTM A47	Malleable Iron Castings
ASTM A53	Pipe, Steel, Black and Hot Dipped, Zinc-Coated Welded and Seamless
ASTM A74	Cast Iron Soil Pipe and Fittings
ASTM A105/A105M	Forgings, Carbon Steel, for Piping Components
ASTM A106	Seamless Carbon Steel Pipe for High-Temperature Service
ASTM A126	Standard Specification for Gray Iron Castings for Valves, Flanges, and Pipe Fittings
ASTM A197	Cupola Malleable Iron
ASTM A234/A234M	Pipe Fittings of Wrought Carbon Steel and Alloy Steel for Moderate and Elevated Temperatures
ASTM A312/A312M	Seamless and Welded Austenitic Stainless Steel Pipe
ASTM A403/A403M	Wrought Austenitic Stainless Steel Piping Fittings
ASTM A536	Ductile Iron Castings
ASTM A570/A570M	Hot-Rolled Carbon Steel Sheet and Strip, Structural Quality
ASTM B88	Seamless Copper Water Tube
ASTM C76	Reinforced Concrete Culvert, Storm Drain, and Sewer Pipe
ASTM C296	Asbestos-Cement Pressure Pipe
ASTM C443-REV A	Standard Specification for Joints for Circular Concrete Sewer and Culvert Pipe, Using Rubber Gaskets

Reference	Title
ASTM C564	Rubber Gaskets for Cast Iron Soil Pipe and Fittings
ASTM D1248	Polyethylene Plastics Molding and Extrusion Materials
ASTM D1784	Rigid Poly (Vinyl Chloride) (PVC) Compounds and Chlorinated Poly(Vinyl Chloride) (CPVC) Compounds
ASTM D1785	Poly (Vinyl Chloride) (PVC) Plastic Pipe, Schedules 40, 80, and 120
ASTM D2241	Poly (Vinyl Chloride) (PVC) Plastic Pipe (SDR-PR)
ASTM D2513	Thermoplastic Gas Pressure Pipe, Tubing, and Fittings
ASTM D2665	Poly (Vinyl Chloride) (PVC) Plastic Drain, Waste, and Vent Pipe and Fittings
ASTM D2996	Filament-Wound Reinforced Thermosetting Resin Pipe
ASTM D3034	Standard Specification for Type PSM Poly (Vinyl Chloride) (PVC) Sewer Pipe and Fittings
ASTM D3261	Butt Fusion Polyethylene (PE) Plastic Fittings for Polyethylene (PE) Plastic Pipe and Tubing
ASTM D4174	Cleaning, Flushing, and Purification of Petroleum Fluid Hydraulic Systems
ASTM D4101	Propylene Plastic Injection and Extrusion Materials
ASTM F441	Chlorinated Poly (Vinyl Chloride) (CPVC) Plastic Pipe, Schedules 40 and 80
AWWA C105	Polyethylene Encasement for Ductile-Iron Piping for Water and Other Liquids
AWWA C110	Ductile-Iron and Gray-Iron Fittings, 3 Inch Through 48 Inch, for Water and Other Liquids
AWWA C111	Rubber-Gasket Joints for Ductile-Iron and Gray-Iron Pressure Pipe and Fittings
AWWA C115	Flanged Ductile-Iron and Gray-Iron Pipe with Threaded Flanges
AWWA C151	Ductile-Iron Pipe, Centrifugally Cast in Metal Molds or Sand-Lined Molds, for Water or Other Liquids
AWWA C200	Steel Water Pipe 6 Inches and Larger
AWWA C205	Cement-Mortar Protective Lining and Coating for Steel Water Pipe--4 In. and Larger--Shop Applied
AWWA C206	Field Welding of Steel Water Pipe
AWWA C207	Steel Pipe Flanges for Waterworks Services--Sizes 4 In. through 144 In.
AWWA C208	Dimensions for Fabricated Steel Water Pipe Fittings

Reference	Title
AWWA C209	Cold-Applied Tape Coating for Special Sections, Connections, and Fittings for Steel Water Pipelines
AWWA C210	Liquid Epoxy Coating Systems for the Interior and Exterior of Steel Water Pipe
AWWA C214	Tape Coating Systems for the Exterior of Steel Water Pipelines
AWWA C301	Prestressed Concrete Pressure Pipe, Steel Cylinder Type, for Water and Other Liquids
AWWA C303	Reinforced Concrete Pressure Pipe--Steel Cylinder Type, Pretensioned, for Water and Other Liquids
AWWA C600	Installation of Ductile-Iron Water Mains and Their Appurtenances
AWWA C651	Disinfecting Water Mains
AWWA C900	Polyvinyl Chloride (PVC) Pressure Pipe, 4 Inches Through 12 Inches, for Water
AWWA M11	Steel Pipe--A Guide for Design and Installation
CISPI 301	Specification Data for Hubless Cast Iron Sanitary System with No-Hub Pipe and Fittings
FEDSPEC L-C-530B(1)	Coating, Pipe, Thermoplastic Resin or Thermosetting Epoxy
MIL-H-13528B	Hydrochloric Acid, Inhibited, Rust Removing
MIL-STD-810C	Environmental Test Methods
SAE J1227	Assessing Cleanliness of Hydraulic Fluid Power Components and Systems
UPC	Uniform Plumbing Code

B. FITTINGS AND COUPLING COMPATIBILITY:

To assure uniformity and compatibility of piping components, fittings and couplings for grooved end piping systems shall be furnished by the same manufacturers. Grooved end pipe (Victaulic) type fittings only where specifically allowed by the engineer and will not be allowed in buried application.

C. PIPING SUPPORTS, SEISMIC RESTRAINTS, AND EXPANSION CONTROL:

The Contractor shall provide the final design, inspection, and certification for the piping supports, seismic restraints, and provisions for control of pipe expansion for this project. Pipe supports are specified under Section 15096. Seismic restraints are specified under Section 15097. Pipe expansion control systems are specified under Section 15098. The design of these systems shall be the product of a professional engineer licensed to practice in the State of Georgia retained by the Contractor. The professional engineer (hereinafter and in all referenced sections the "Design Professional") shall obtain and maintain professional liability insurance in the amount of

$1,000,000 aggregate to be in effect for duration of this project plus one year. The Design Professional shall have not less than five years experience in the type of piping work required for this project. This requirement, however, shall not be construed as relieving the Contractor of overall responsibility for this portion of the work.

PART 2--PRODUCTS

2.01 PIPING MATERIALS

Unless otherwise specified, piping materials, including pipe, gaskets, fittings, connection and joint assemblies, linings and coatings, shall be selected from those listed on the piping system specification sheets. Piping materials shall conform to detailed specifications for each type of pipe and piping appurtenance specified in other sections of Division 15.

2.02 PIPING IDENTIFICATION

A. PLASTIC CODING MARKERS:

Plastic markers for coding pipe shall conform to ANSI A13.1 and shall be as manufactured by W. H. Brady Company, Seton Name Plate Corporation, Marking Services Inc., or equal. Markers shall be the mechanically attached type that are easily removable; they shall not be the adhesive applied type. Markers shall consist of pressure sensitive legends applied to plastic backing which is strapped or otherwise mechanically attached to the pipe. Legend and backing shall be resistant to petroleum based oils and grease and shall meet criteria for humidity, solar radiation, rain, salt, fog and leakage fungus, as specified by MIL-STD-810C. Markers shall withstand a continuous operating temperature range of -40 degrees F to 180 degrees F. Plastic coding markers shall not be the individual letter type but shall be manufactured and applied in one continuous length of plastic.

Markers bearing the legends on the background colors specified in the PIPESPEC shall be provided in the following letter heights:

Outside pipe diameter,[a] inches	Letter height, inches
Less than 1-1/2	1/2
1-1/2 through 3	1-1/8
Greater than 3	2-1/4

[a] Outside pipe diameter shall include insulation and jacketing.

In addition, pipe markers shall include uni- and bi-directional arrows in the same sizes as the legend. Legends and arrows shall be white on blue or red backgrounds and black on other specified backgrounds.

B. PLASTIC TRACER TAPE:

Tracer tape shall be 6 inches wide, colored the same as the background colors as specified in Table A, paragraph 15050-3.06, and made of inert plastic material suitable for direct burial. Tape shall be capable of stretching to twice its original length and shall be as manufactured by Allen Systems, W. H. Brady Co., Seton Name Plate Corporation, Marking Services Inc., or equal.

Two messages shall be printed on the tape. The first message shall read ***"CAUTION CAUTION CAUTION _____ PIPE BURIED BELOW"*** with bold letters approximately 2 inches high. The blank shall be filled with the particular system fluid such as chlorine, oxygen or sulfur dioxide. The second message shall read *"**CALL** _____"* with letters approximately 3/4 inch high. Both messages shall be printed at maximum intervals of 2 feet.

2.03 VALVES

Valves of the same size and service shall be provided by a single valve manufacturer. Packing shall be nonasbestos material. Actual length of valves shall be within 1/16 inch (plus or minus) of the manufacturer's specified length. Flanges shall meet the requirement of ANSI B16.5. Push-on and mechanical joints shall meet the requirements of AWWA C111. Valve operators are specified in Sections 15184 and 15185.

2.04 PRODUCT DATA

Product data on piping materials shall be provided in accordance with Section 01300 where specified.

Piping layout drawings shall be transmitted to the Engineer a minimum of 2 weeks prior to construction. Drawings shall be original layouts by the Contractor; photocopies of contract drawings are not acceptable.

PART 3--EXECUTION

3.01 INSTALLATION

A. LOCATION:

Piping shall be provided as specified except for adjustments to avoid architectural and structural features and shall be coordinated with electrical construction.

B. PIPING SIZES:

Where the size of piping is not specified, the Contractor shall provide piping of the sizes required by UPC. Unless specified otherwise, small piping (less than 1 inch in diameter) required for services not described by UPC shall be 1/2 inch.

C. PIPE SUPPORT, ANCHORAGE AND SEISMIC BRACING:

1. GENERAL: Piping shall be supported by anchor brackets, guides, saddles or hangers. Pipe movement due to thermal expansion and internal pressure and dynamic forces shall be accommodated by pipe springing, anchors, expansion joints, and guides selected for the specific purpose by the design professional retained under the provisions of paragraph 15050-1.02 C. The details for the piping support, seismic bracing, and expansion control systems shall be submitted with the Contractor's piping layout drawings as product data under the provisions of paragraph 15050-2.04. Acceptable types of supports, guides, saddles, expansion joints, flexible couplings, hangers and structure attachments for general piping support,

expansion/contraction and for seismic bracing, as well as anchorage details, are referenced in Sections 15096, 15097 and 15098 or shown on the drawings. Where a specific type of support or anchorage is indicated on the drawings, then only that type shall be used at that location. Piping shall be vertically supported by anchor brackets, guides, saddles or hangers and shall be seismically braced as required to resist seismic loads. Supports shall be provided on each run at each change of direction. Piping supports manufactured of iron or steel shall be hot-dip or mechanically galvanized. Unless otherwise specified, existing pipes and supports shall not be used to support new piping. Existing tunnel pipe support racks can be used for new pipe if the design professional determines that the existing rack components are adequate to support the additional load.

2. PIPING CONNECTIONS TO MACHINES: Piping at machine connections shall be aligned in all planes to permit insertion of bolts at bolted connections or coupling screwed connections without using jacks, come-a-longs or other mechanical means to align field piping with the connections at the machines. Bolts shall not be forced into mating flange bolt holes and shall be capable being withdrawn using finger pressure alone. The use of ‘dutchmen’ mitered sections or similar specials to achieve the required alignment with machine connections is strictly prohibited.

D. ANCHORAGE FOR BURIED PIPING:

All plugs, caps, tees and bends in buried pressure piping systems shall be anchored by means of reaction backing or restrained joints as specified.

E. BEDDING AND BACKFILL:

Bedding and backfill for buried piping shall be as specified.

F. EQUIPMENT CONNECTION FITTINGS

Where shown, equipment connection fittings as specified in Section 15085 shall be provided between field piping systems and equipment inlet and outlet connections.

G. FLEXIBILITY

Unless otherwise specified, piping passing from concrete to earth shall be provided with two pipe couplings or flexible joints as specified in Section 15085.

3.02 PIPING IDENTIFICATION

A. PIPE CODING:

After application of the specified coating and insulation systems, exposed piping, interior and exterior, and piping in ceiling spaces, pipe trenches, pipe chases and valve boxes shall be identified with plastic markers as specified in paragraph 15050-2.02 A. Legend markers and directional arrows shall be located at each side of walls, floors and ceilings, at one side of each piece of equipment, at piping intersections, and at approximately 50-foot centers.

B. PLASTIC TRACER TAPE:

A single line of tape as specified in paragraph 15050-2.02 B shall be provided 2.5 feet above the centerline of buried (insert required systems) pipe. For (insert required systems) pipelines buried 8 feet or greater below finished grade, contractor shall provide a second line of tape 12 inches below finished grade, above and parallel to each buried pipe. Tape shall be spread flat with message side up before backfilling.

3.03 VALVE IDENTIFICATION

Stainless steel tags bearing the specified valve number stamped in 1/4-inch high letters shall be installed on valve flanges in a position visible from floor level. Flangeless valves 8 inches in diameter and larger shall have tags attached to the valve body by self-tapping corrosion resistant metal screws. Flangeless valves 6 inches in diameter and smaller shall have tags attached to the valve stem by stainless steel wire. Wire shall be 0.063 inch minimum.

3.04 TESTING

A. GENERAL:

Upon completion of piping, but prior to application of insulation on exposed piping, the Contractor shall test the piping systems. Pressures, media and test durations shall be as specified in the PIPESPEC. Equipment which may be damaged by the specified test conditions shall be isolated. Testing shall be performed using calibrated test gages and calibrated volumetric measuring equipment to determine leakage rates. Each test gage shall be selected so that the specified test pressure falls within the upper half of the gage's range. Unless otherwise specified, the Contractor shall notify the Engineer 24 hours prior to each test.

Unless otherwise specified, testing, as specified herein, shall include existing piping systems which connect with new pipe systems. Existing pipe shall be tested to the nearest existing valve. Any piping which fails the test shall be repaired. Repair of existing piping will be considered and paid for as extra work.

Where testing existing chlorine and sulfur dioxide systems to the nearest isolation valve, Contractor shall provide a tee in the line adjacent to the valve. The branch outlet on the tee shall be valved and used for cleaning, pressure testing, draining, and drying the line. Unless otherwise indicated, the existing chlorine or sulfur dioxide system shall not be shut down during testing or connecting the tee and valve. Prior to placing the line in service, the valve on the branch outlet shall be plugged or sealed with a blind flange or threaded plug. Contractor shall be responsible for all damage to the existing system as a result of this work.

B. GAS, AIR, AND VAPOR SYSTEMS:

The Contractor shall test steam lines hydrostatically in accordance with the ASME procedure for testing pressure piping.

Testing medium and procedures for chlorine and sulfur dioxide systems are specified in paragraph 15050-3.04 D.

Unless otherwise specified, the testing medium for other gas, air and vapor systems shall be as follows:

Pipeline size	Specified test pressure	Testing medium
2 inch and smaller	75 psi or less	Air or water
2 inch and smaller	Greater than 75 psi	Water
Greater than 2 inch	3 psi or less	Air or water
Greater than 2 inch	Greater than 3 psi	Water

The allowable leakage rate for hazardous gas systems, insulated systems, and systems tested with water shall be zero at the specified test pressure throughout the specified test period. Hazardous gas systems shall include sulfur dioxide, chlorine, propane, sludge gas and natural gas systems.

The allowable leakage rate for other systems tested with air shall be based on a maximum pressure drop of 5 percent of the specified test pressure for the duration of the period. Prior to starting a test interval using air, the air shall be at ambient temperature and specified test pressure.

C. LIQUID SYSTEMS (EXCL SANITARY SEWER):

Leakage shall be zero at the specified test pressure throughout the specified duration for the following systems: exposed piping, buried insulated piping, and buried or exposed piping carrying liquid chemicals. Testing procedures for chlorine and sulfur dioxide systems are specified in paragraph 15050-3.04 D. Testing procedures for hydraulic and lube oil systems are specified in paragraph 15050-3.04 E. Unless otherwise specified, leakage from other buried liquid piping systems shall be less than 0.02 gallon per hour per inch diameter per 100 feet of buried piping.

D. CHLORINE AND SULFUR DIOXIDE SYSTEMS: (NOT USED)

E. HYDRAULIC AND LUBE OIL SYSTEMS: (NOT USED)

F. DRAINS:

Drain systems, other than pumped drain systems, shall be tested in accordance with UPC.

G. SANITARY SEWER SYSTEMS:

Sanitary sewer systems and other gravity flow systems when specified shall be tested using low pressure air testing. The line segment between two manholes shall be temporarily plugged using air tight fittings through which low pressure air can be introduced. All wyes and/or stubs shall be plugged in a manner acceptable to the Engineer. The plugs shall be securely fastened to withstand internal test pressures.

Low pressure air will be introduced into the test pipe segment until the internal air pressure reaches 4.5 psig above ground water pressure, if any. At least two minutes will be allowed for the air temperature inside the test segment to stabilize, while internal air pressure remains no less than 3.5 psig above ground water pressure. The test will then commence and the pressure monitored

until the internal pressure falls to 2.5 psig above ground water pressure. The allowable elapsed time for the internal pressure drop shall be as follows:

Pipe Diameter	Elapsed time (minutes/100 feet)
6”	0.7
8”	1.2
10”	1.5
12”	1.8
15-16”	2.1
18”	2.4
20-21”	3.0
24”	3.6
27”	4.2
30”	4.8
36”	5.5

3.05 CLEANING AND FLUSHING

A. GENERAL:

Piping systems shall be cleaned following completion of testing and prior to connection to operating, control, regulating or instrumentation equipment. The Contractor may, at his option, clean and test sections of buried or exposed piping systems. Use of this procedure, however, will not waive the requirement for a full pressure test of the completed system. Unless specified otherwise, piping 24 inches in diameter and smaller shall first be cleaned by pulling a tightly fitting cleaning ball or swab through the system. Piping larger than 24 inches in diameter may be cleaned manually or with a cleaning ball or swab.

B. TEMPORARY SCREENS:

Upon completion of the cleaning, the Contractor shall connect the piping systems to related process equipment. Temporary screens, provided with locator tabs which remain visible from the outside when the screens are in place, shall be inserted in pipelines at the suction of pumps and compressors in accordance with the following table:

Equipment suction or piping size, inches	Maximum screen opening, inches
0 –1	1/16
1-1/4 – 3	1/4
3-1/2 – 6	1/2
Over 6	1

The Contractor shall maintain the screens during testing, initial start-up, and initial operating phases of the commissioning process. In special cases, screens may be removed as required for performance tests. The Contractor shall remove the temporary screens and make the final piping connections after the screens have remained clean for at least 24 consecutive hours of operation. Systems handling solids are exempted.

C. GAS AND AIR SYSTEMS:

Unless otherwise specified, gas and air system piping 6 inches in diameter and smaller shall be blown out, using air or the testing medium specified. Piping larger than 6 inches shall be cleaned by having a swab or "pig" drawn through the separate reaches of pipe. After connection to the equipment, it shall then be blown out using the equipment. Upon completion of cleaning, the piping shall be drained and dried with an airstream. Sludge gas, natural gas and propane systems shall be purged with nitrogen and a nitrogen pad maintained at 10 psi until put in service. Chlorine and sulfur dioxide systems shall be cleaned in accordance with paragraph 15050-3.05 E.

D. LIQUID SYSTEMS:

After completion of cleaning, liquid systems, unless otherwise specified, shall be flushed with clean water. With temporary screens in place, the liquid shall be circulated through the piping system using connected equipment for a minimum period of 15 minutes and until no debris is collected on the screens.

E. CHLORINE AND SULFUR DIOXIDE SYSTEMS: (NOT USED)

F. STEAM SYSTEMS: (NOT USED)

G. HYDRAULIC AND FLUID POWER OIL SYSTEMS: (NOT USED)

H. POTABLE WATER SYSTEMS:

Potable water piping systems shall be flushed and disinfected in accordance with AWWA C651.

3.06 PIPING SPECIFICATION SHEETS (PIPESPEC)

Piping and valves for groupings of similar plant processes or types of service lines are specified on individual piping specification sheets (PIPESPECS). Piping services are grouped according to the chemical and physical properties of the fluid conveyed and/or by the temperature or pressure requirements. Each grouping of services (PIPESPEC) is identified by a piping system number. Piping services specified in the PIPESPECS and on the drawings are alphabetically arranged by designated service symbols as shown in Table A. Table A also indicates the system number, fluid category, and pipe marker background color of each service. Fire suppression piping is specified in Division 13.

Table A, Piping Services

Symbol	Service	System	Fluid category	Pipe marker background color	Banding Color
A	Aeration Air	1	Air	Light Green	None
AA	Agitation Air	1	Air	Light Green	None
CD	Chemical Drain	25	Drain/Vent	Yellow	TBD
CIT	Citric Acid	19	Chemical	Yellow	Green
D	Drain	24	Drain/Vent	Black	White
FA	Foul Air	22	Foul Air	Yellow	TBD
FECL	Ferric Chloride	19	Chemical	Yellow	TBD
GR	Grit	17	Grit Slurry	Brown	TBD
HOCL	Sodium Hypochlorite	19	Chemical	Yellow	TBD
IA	Instrument Air	2	Air	Light Green	TBD
IMLR	Internal Mixed Liquor Return	14	Sludge	Brown	TBD
ML	Mixed Liquor	14	Sludge	Brown	TBD
NaOH	Sodium Hydroxide	19	Chemical	Yellow	TBD
NG	Natural Gas	5	Gas	Yellow	TBD
OA	Outside Air	22	Air	Yellow	TBD
OF	Overflow	13	Wastewater	TBD	TBD
PD	Pumped Drainage	12	Wastewater	TBD	TBD
PE	Primary Effluent	13	Wastewater	TBD	TBD
PRM	Membrane Permeate	34	Wastewater	TBD	TBD
RAS	Return Activated Sludge	14	Sludge	TBD	TBD
REC	Recycle	24	Drain/Vent	Green	TBD
RS	Raw Sewage	12	Wastewater	Dark Gray	TBD
RWP	Rainwater Pipe	24	Drain/Vent	Black	TBD
SA	Service Air	2	Air	Orange	TBD
SD	Sanitary Drain	24	Drain/Vent	Black	TBD
SS	Sanitary Sewer	33	Wastewater	Green	TBD
STD	Storm Drain	24	Drain/Vent	Green	TBD
TD	Tank Drain	12	Wastewater	Green	TBD
THS	Thickened Sludge	16	Sludge	Dark Brown	TBD
TS	Transfer Sludge	14	Sludge	Dark Brown	TBD
TSC	Thickened Scum	16	Sludge/Scum	TBD	TBD

Symbol	Service	System	Fluid category	Pipe marker background color	Banding Color
TWAS	Thickened Waste Activated Sludge	14	Sludge	Brown	TBD
V	Vent	24	Drain/Vent	Black	TBD
VC	Chemical Vent	25	Drain/Vent	Yellow	TBD
WAS	Waste Activated Sludge	14	Sludge	Brown	TBD
1W	Potable Water (City water)	7	Water	Blue	TBD
2W	Nonpotable City Water	13	Water	TBD	TBD
3W	No. 3 Water	13	Water	Purple	TBD

3.06 PIPING SPECIFICATION SHEET--PIPESPEC

Piping Symbol/Service:	A--Aeration Air AA--Agitation Air	System--1

Test Requirements:

Medium:	Air; ref. spec paragraph 15050-3.04 B.
Pressure:	20 psig
Duration:	120 minutes

Gasket Requirements:

Flange:	Compressed gasketing consisting of organic fibers (Kevlar) and neoprene binder
Push-on/Mech Cpl:	EPDM

Exposed Pipe and Valves:
(See drawings for pipe size and valve type)

(2 1/2" and smaller)

Pipe:	Stainless steel; ASTM A778, Ref. spec Section 15067. Conn; butt weld(1) or flanged, couplings where specified. Ftgs; ASTM A774, material, ends and wall thickness to match pipe.
Valves:	Ball; Jamesbury Fig. 351, Nibco T-580, or equal. Globe; Crane 7TF or 17TF, Lunkenheimer 123 or 214, or equal. Lift check; Crane 27TF, Lunkenheimer 231, or equal.

(3” and larger)

Pipe:	Stainless steel; ASTM A778, Ref. spec Section 15067. Conn; butt weld(1) or flanged, couplings where specified. Ftgs; ASTM A774, material, ends and wall thickness to match pipe.
Valves:	Butterfly; ref. spec Section 15103. Double-disc check; ref. spec Section 15119.

Buried and Encased Pipe and Valves:
(See drawings for pipe size and valve type. Omit coating on encased pipe.)

(All buried pipe)

Pipe:	Ductile iron; AWWA C151. Ref. spec Section 15062. Conn; restrained push-on rubber gasket joint. Flanged adapters for valves. Ftgs; ductile iron per spec Section 15062; coating, lining, and ends to match pipe.

(2" and smaller)

Valves:	Ball; same as exposed with extension stem and valve box. Coating M-1 per spec Section 09900.
(2 1/2" thru 8" and smaller)	
Valves:	Butterfly; same as exposed with extension stem and valve box. Coating M-1 per spec Section 09900.
(10" and larger)	
Valves:	Butterfly; same as exposed with extension stem and valve box. Coating M-1 per spec Section 09900.

Remarks:

(1) No field welding is allowed except where essential to the installation of the piping system. All proposed field welding locations shall be subject to approval by the Owner. Proposed field welded locations must be specifically indicated on the piping shop drawings.

3.06 PIPING SPECIFICATION SHEETS--PIPESPEC

Piping Symbol/Service:	IA—Instrument Air SA—Service Air	System--2

Test Requirements:

Medium:	Ref. spec paragraph 15050-3.04 B.
Pressure:	200 psig
Duration:	120 minutes

Gasket Requirements:

Flange:	Compressed gasketing consisting of organic fibers (Kevlar) and neoprene binder
Push-on/Mech Cpl:	N/A

All IA and SA Pipe and Valves in corrosive areas:
(See drawings for pipe size and valve type)

(1/2" and smaller)

Pipe:	316 SS tube Conn; compression type. Ftgs; compression type, Swagelok, Gyrolok, or equal.

(3/4" thru 2")

Pipe:	Stainless steel; ASTM A312, Schedule 40S. Ref. spec Section 15067. Conn; threaded, ANSI B1.20.1. Ftgs; ASTM A403, material, ends and wall thickness to match pipe.

(2" and smaller)

Valves:	Ball; Jamesbury Fig. 351, Nibco T-580, or equal. Globe; Crane 7TF or 17TF, Lunkenheimer 123 or 214, or equal. Lift check; Lunkenheimer 1616, Crane 366E, or equal.

(2 1/2" thru 6")

Pipe:	316 Stainless steel; ASTM A778, Ref. spec Section 15067. Conn; butt weld or flanged, couplings where specified. Ftgs; ASTM A774, material, ends and wall thickness to match pipe.

.

Valves:	Ball; Jamesbury 5150-31-2200TT, Nibco F-510, or equal. Check; Ported plate style designed for use with pulsating flow; Hoerbiger Depend-A-Check or Compact-A-Check, Dienes Type DL-RF, or equal.

SA Pipe and Valves in non-corrosive areas:
(See drawings for pipe size and valve type)

(1/2" and smaller)

Pipe:	Copper tube; ASTM B88, Type L, drawn. Ref. spec Section 15066. Conn; brass compression type. Ftgs; brass compression type, Swagelok, Gyrolok, or equal.

(3/4" thru 2")

Pipe:	Copper tube; ASTM B88, Type L, drawn. Conn; solder type with threaded adapters or valves. Ftgs; wrought copper or bronze, ANSI B16.22.

(2" and smaller)

Valves:	Ball; Jamesbury Fig. 351, Nibco T-580, or equal. Globe; Crane 7TF or 17TF, Lunkenheimer 123 or 214, or equal. Lift check; Lunkenheimer 1616, Crane 366E, or equal.

(2 1/2" thru 6")

Pipe:	Steel; ASTM A53, ERW, Grade B, black, no lining. Ref. spec Section 15061. Conn; butt weld, flanged for valves. Ftgs; steel, ASTM A234, ANSI B16.9; ends to match pipe.
Valves:	Ball; Jamesbury 5150-31-2200TT, Nibco F-510, or equal. Check; Ported plate style designed for use with pulsating flow; Hoerbiger Depend-A-Check or Compact-A-Check, Dienes Type DL-RF, or equal.

3.06 PIPING SPECIFICATION SHEETS--PIPESPEC

Piping Symbol/Service:	NG—Natural Gas	System--5

Test Requirements:

Medium:	Ref. spec paragraph 15050-3.04 B.
Pressure:	150 psig
Duration:	120 minutes

Gasket Requirements:

Flange:	Compressed gasketing consisting of organic fibers (Kevlar) and neoprene binder
Push-on/Mech Cpl:	N/A

Exposed Pipe and Valves:
(See drawings for pipe size and valve type)

(2" and smaller)

Pipe:	Steel; ASTM A106, seamless, Grade B, black, no lining. Ref. spec Section 15061. Conn; taper threaded, ANSI B1.20.1. Ftgs; malleable iron, ASTM A197, ANSI B16.3, Class 150; ends to match pipe.
Valves:	Ball; Jamesbury Fig. 351, Nibco T-580, or equal. Globe; Crane 7TF or 17TF, Lunkenheimer 123 or 214, or equal. Lift check; Crane 366E, Lunkenheimer 1616, or equal.

(2 1/2" thru 8")

Pipe:	Steel; ASTM A53, seamless, Grade B, black, no lining. Ref. spec Section 15061. Conn; butt weld, flanged for valves. Ftgs; steel, ASTM A234, ANSI B16.9; ends to match pipe.
Valves:	Lubricated plug; cast iron, flanged, PTFE or molydisulfide coated plug, Nordstrom Fig. 143, Walworth Fig. 1797F, or equal, thru 5 inch; worm gear operator, Nordstrom Fig. 149, Walworth Fig. 1727F, or equal, 6 to 8 inch.

Buried and Encased Pipe and Valves:
(See drawings for pipe size and valve type. Omit coating on encased pipe.)

Pipe:	Polyethylene pipe (PE); ASTM D2513 Provide plastic tracer tape. Conn; same as exposed with coating.

(2" and smaller)

Valves:	Ball; same as exposed with extension stem and valve box. Coating M-1 per spec Section 09900.

(2 1/2" thru 8")
Valves: Lubricated plug; same as exposed with extension stem and valve box. Coating M-1 per spec Section 09900.

Remarks:

3.06 PIPING SPECIFICATION SHEETS--PIPESPEC

Piping Symbol/Service	1W—Potable Water	System--7

Test Requirements:

Medium:	Water; ref. spec paragraph 15050-3.04 C.
Pressure:	150 psig
Duration:	60 minutes

Gasket Requirements:

Flange:	Compressed gasketing consisting of organic fibers (Kevlar) and neoprene binder
Push-on/Mech Cpl:	EPDM

Exposed Pipe and Valves:
(See drawings for pipe size and valve type. See Remarks for insulation requirements.)

(3" and smaller)

Pipe:	Copper tube; ASTM B88, Type L, drawn. Ref. spec Section 15066. Conn; solder type with threaded or flanged adapters for valves. Ftgs; wrought copper or bronze, ANSI B16.22.

(2" and smaller)

Valves:	Ball; Jamesbury Fig. 351, Nibco T-580, or equal. Globe; Crane 7TF or 17TF, Lunkenheimer 123 or 214, or equal. Swing check; Crane 137, Lunkenheimer 230, or equal.

(4" and larger)

Pipe:	Ductile iron; AWWA C151 with cement mortar lining. Ref. spec Section 15062. Conn; Flanged. Ftgs; ductile iron per spec Section 15062; coating, lining, and ends to match pipe.

(2 1/2" and larger)

Valves:	Butterfly; ref. spec Section 15103. Substitute Type B on 2-1/2-inch lines. Swing check; spring loaded per spec Section 15118.

Buried and Encased Pipe and Valves:
(See drawings for pipe size and valve type. Omit coating on encased pipe. See Remarks for insulation requirements.)

(3" and smaller)

Pipe:	Copper tube; ASTM B88, Type K, annealed or drawn.

	Conn; solder type, with threaded or flanged adapters for valves. Ftgs; wrought copper or bronze, ANSI B16.22.
Valves:	Gate; ref. spec Section 15101, with extension stem and valve box. Coating M-1 per spec Section 09900.
(4" and larger)	
Pipe:	Ductile iron; AWWA C151 with cement mortar lining. Ref. spec Section 15062. Conn; restrained push-on rubber gasket joint. Flanged adapters for valves. Ftgs; ductile iron per spec Section 15062; coating, lining, and ends to match pipe.
Valves:	Butterfly; same as exposed with extension stem and valve box. Coating M-1 per spec Section 09900. Resilient Seated Gate Valves – per Fulton County Standards

Remarks:

1. Manual air vents shall be provided at the high points and drains provided at the low points of each reach of pipeline as specified in paragraph 15095-3.03.
2. Grooved end pipe (Victaulic) type fittings only where specifically allowed by the engineer and will not be allowed in buried application.

3.06 PIPING SPECIFICATION SHEETS--PIPESPEC

Piping Symbol/Service:	PD—Pumped Drainage RS—Raw Sewage TD—Tank Drain	System--12

Test Requirements:

Medium:	Water; ref. spec paragraph 15050-3.04 C.
Pressure:	125 psig
Duration:	120 minutes

Gasket Requirements:

Flange:	Compressed gasketing consisting of organic fibers (Kevlar) and neoprene binder
Push-on/Mech Cpl:	Nitrile or Neoprene

Exposed Pipe and Valves:
(See drawings for pipe size and valve type)

(3" and smaller)

Pipe:	PVC; ASTM D1784, Class 12454-B, ASTM D1785, Sch. 80. Ref. spec Section 15064. Conn; plain end; solvent weld with threaded or flanged adapters for valves. Ftgs; PVC, Sch. 80, socket weld
Valves:	Eccentric plug; per spec Section 15110. Install valve with seat upstream. Swing check; Lunkenheimer 230, Crane 137, or equal.

(3" and Larger)

Pipe:	Ductile iron; AWWA C151. Ref. spec Section 15062. Conn; Flanged. Ftgs; ductile iron, per spec Section 15062; coating, lining and ends to match pipe. See Remark #3 for special lining requirements.
Valves:	Eccentric plug; per spec Section 15110. Install valve with seat upstream. Swing check; spring loaded per spec Section 15118.

Buried and Encased Pipe and Valves:
(See drawings for pipe size and valve type. Omit coating on encased pipe.)

(3" and smaller)

Pipe:	PVC; ASTM D1784, Class 12454-B, ASTM D1785, Sch. 80. Ref. spec Section 15064. Provide magnetic tracer tape. Conn; plain end; solvent weld with threaded or flanged adapters for valves. Ftgs; PVC, Sch. 80, socket weld.

Valves:	Eccentric plug; same as exposed with extension stem and valve box. Coating per spec Section 09900.
(4" thru 12")	
Pipe:	Ductile iron; AWWA C151. Ref. spec Section 15062. Conn; restrained push-on rubber gasket joint. Flanged adapters for valves. Ftgs; ductile iron, per spec Section 15062; coating, lining and ends to match pipe.
Valves:	Eccentric plug; same as exposed with extension stem and valve box. Coating M-1 per spec Section 09900.
(14" and larger)	
Pipe:	Ductile iron; same as 12 inch for pipe and ftgs or Concrete cylinder; ref. spec Section 15057. Conn; restrained bell and spigot with O-ring rubber gasket joint. Flanged adapters for valves. Ftgs; fabricated steel, mortar lined and coated. Ref. spec Section 15057.
Valves:	Eccentric plug; same as exposed with extension stem and valve box. Coating M-1 per spec Section 09900.

Remarks:

1. Manual air vents shall be provided at the high points and drains provided at the low points of each reach of pipeline as specified in paragraph 15095-3.03.

2. Grooved end pipe (Victaulic) type fittings only where specifically allowed by the engineer and will not be allowed in buried application.

3. The following piping segments shall be supplied with fusion bonded epoxy lining (Protecto 401 or approved equal):
    - 16-inch, 24-inch and 30-inch RS piping from the Fine Screens (located in the Treatment Building) to Biological Basins Splitter Box and from the Biological Basins Splitter Box to the Fermentation Zones at the Biological Basins.

3.06 PIPING SPECIFICATION SHEETS--PIPESPEC

Piping Symbol/Service:	OF—Overflow PE—Primary Effluent 2W—Non-potable City Water 3W—No. 3 Water PRM – Membrane Permeate (except where System 34 [(2)])	System--13

Test Requirements:

Medium:	Water; ref. spec paragraph 15050-3.04 C.
Pressure:	125 psig
Duration:	120 minutes

Gasket Requirements:

Flange:	Compressed gasketing consisting of organic fibers (Kevlar) and neoprene binder
Push-on/Mech Cpl:	Nitrile or Neoprene

Exposed Pipe and Valves:
(See drawings for pipe size and valve type)

(3" and smaller)

Pipe:	PVC; ASTM D1784, Class 12454-B, ASTM D1785, Sch. 80. Ref. spec Section 15064. Conn; plain end; solvent weld with threaded or flanged adapters for valves. Ftgs; PVC, Sch. 80, socket weld
Valves:	Eccentric plug; per spec Section 15110. Install valve with seat upstream. Swing check; Lunkenheimer 230, Crane 137, or equal.

(3" and Larger)

Pipe:	Ductile iron; AWWA C151. Ref. spec Section 15062. Conn; Flanged. Ftgs; ductile iron, per spec Section 15062; coating, lining and ends to match pipe.
Valves:	Eccentric plug; per spec Section 15110. Install valve with seat upstream. Swing check; spring loaded per spec Section 15118.

Buried and Encased Pipe and Valves:
(See drawings for pipe size and valve type. Omit coating on encased pipe.)

(3" and smaller)

Pipe:	PVC; ASTM D1784, Class 12454-B, ASTM D1785, Sch. 80. Ref. spec Section 15064. Provide magnetic tracer tape. Conn; plain end; solvent weld with threaded or flanged adapters for valves.

	Ftgs; PVC, Sch. 80, socket weld.
Valves:	Gate; ref. spec Section 15101, with extension stem and valve box. Coating M-1 per spec Section 09900.
(4" thru 12")	
Pipe:	Ductile iron; AWWA C151. Ref. spec Section 15062. Conn; restrained push-on rubber gasket joint. Flanged adapters for valves. Ftgs; ductile iron per spec Section 15062; coating, lining and ends to match pipe.
Valves:	Butterfly; same as exposed with extension stem and valve box. Coating M-1 per spec Section 09900.
(14" and larger)	
Pipe:	Ductile iron; same as 12 inch for pipe and ftgs, or Concrete cylinder; ref. spec Section 15057. Conn; restrained bell and spigot with O-ring rubber gasket joint. Flanged adapters for valves. Ftgs; fabricated steel, mortar lined and coated. Ref. spec Section 15057.
Valves:	Butterfly; same as exposed with extension stem and valve box. Coating M-1 per spec Section 09900.

Remarks:

1. Manual air vents shall be provided at the high points and drains provided at the low points of each reach of pipeline as specified in paragraph 15095-3.03.

2. The membrane system supplier under Section 11300 shall define the extents where System 13 applies to the PRM permeate piping

3.06 PIPING SPECIFICATION SHEETS--PIPESPEC

Piping Symbol/Service:	ML—Mixed Liquor IMLR—Internal Mixed Liquor Recycle RAS—Return Activated Sludge TS—Transfer Sludge TWAS—Thickened Waste Activated Sludge WAS—Waste Activated Sludge	System--14

Test Requirements:

Medium:	Water; ref. spec paragraph 15050-3.04 C.
Pressure:	125 psig
Duration:	120 minutes

Gasket Requirements:

Flange:	Compressed gasketing consisting of organic fibers (Kevlar) and neoprene binder
Push-on/Mech Cpl:	Nitrile or Neoprene

Exposed Pipe and Valves:
(See drawings for pipe size and valve type)

(3" and smaller)

Pipe:	PVC; ASTM D1784, Class 12454-B, ASTM D1785, Sch. 80. Ref. spec Section 15064. Conn; plain end; solvent weld with threaded or flanged adapters for valves. Ftgs; PVC, Sch. 80, socket weld
Valves:	Eccentric plug; per spec Section 15110. Install valve with seat upstream. Swing check; Lunkenheimer 230, Crane 137, or equal.

(3" and Larger)

Pipe:	Ductile iron; AWWA C151. Ref. spec Section 15062. Conn; Flanged. Ftgs; ductile iron, per spec Section 15062; coating, lining and ends to match pipe. See Remark #2 for special coating requirements.
Valves:	Eccentric plug; per spec Section 15110. Install valve with seat upstream. Swing check; spring loaded per spec Section 15118.

Buried and Encased Pipe and Valves:
(See drawings for pipe size and valve type. Omit coating on encased pipe.)

(3" and smaller)

Pipe:	PVC; ASTM D1784, Class 12454-B, ASTM D1785, Sch. 80. Ref. spec Section 15064. Provide magnetic tracer tape.

	Conn; plain end; solvent weld with threaded or flanged adapters for valves. Ftgs; PVC, Sch. 80, socket weld.
Valves:	Eccentric plug; same as exposed with extension stem and valve box. Coating M-1 per spec Section 09900.
(4" thru 12")	
Pipe:	Ductile iron; AWWA C151 Ref. spec Section 15062. Conn; restrained push-on rubber gasket joint. Flanged adapters for valves. Ftgs; ductile iron per spec Section 15062; coating, lining and ends to match pipe.
Valves:	Eccentric plug; same as exposed with extension stem and valve box. Coating M-1 per spec Section 09900.
(14" and larger)	
Pipe:	Ductile iron; same as 12 inch for pipe and ftgs or Conn; restrained bell and spigot with O-ring rubber gasket joint. Flanged adapters for valves. Ftgs; fabricated steel, mortar lined and coated. Ref. spec Section 15057.
Valves:	Eccentric plug; same as exposed with extension stem and valve box. Coating M-1 per spec Section 09900.

Remarks:

2. Manual air vents shall be provided at the high points and drains provided at the low points of each reach of pipeline as specified in paragraph 15095-3.03.

3. The following piping segments shall be supplied with fusion bonded epoxy lining (Protecto 401 or approved equal):

    - 24-inch and 30-inch RAS piping from Treatment Building to RAS Splitter Box located at the Biological Basins.

3.06 PIPING SPECIFICATION SHEETS--PIPESPEC

Piping Symbol/Service:	THS—Thickened Sludge TSC—Thickened Scum	System--16

Test Requirements:

Medium:	Water; ref. spec paragraph 15050-3.04 C.
Pressure:	200 psig
Duration:	120 minutes

Gasket Requirements:

Flange:	Compressed gasketing consisting of organic fibers (Kevlar) and neoprene binder
Push-on/Mech Cpl:	Nitrile or Neoprene

Exposed Pipe and Valves:
(See drawings for pipe size and valve type)

(3" and smaller)

Pipe:	PVC; ASTM D1784, Class 12454-B, ASTM D1785, Sch. 80. Ref. spec Section 15064. Conn; plain end; solvent weld with threaded or flanged adapters for valves. Ftgs; PVC, Sch. 80, socket weld
Valves:	Eccentric plug; per spec Section 15110. Install valve with seat upstream. Swing check; Lunkenheimer 230, Crane 137, or equal.

(3" and Larger)

Pipe:	Ductile iron; AWWA C151. Ref. spec Section 15062. Conn; Flanged. Ftgs; ductile iron, per spec Section 15062; coating, lining and ends to match pipe.
Valves:	Eccentric plug; per spec Section 15110. Install valve with seat upstream. Swing check; spring loaded per spec Section 15118.

Buried and Encased Pipe and Valves:
(See drawings for pipe size and valve type. Omit coating on encased pipe.)

(3" and smaller)

Pipe:	PVC; ASTM A1784, Class 12454-B, ASTM D1785, Sch. 80. Ref. spec Section 15064. Provide magnetic tracer tape. Conn; plain end; solvent weld with threaded or flanged adapters for valves. Ftgs; PVC, Sch. 80, socket weld.

Valves:	Eccentric plug; same as exposed with extension stem and valve box. Coating M-1 per spec Section 09900.
(4" thru 12")	
Pipe:	Ductile iron; AWWA C151, with glass lining, Ferrock MEH-32, Ervite SG-14, or equal. Ref. spec Section 15062. Conn; restrained push-on rubber gasket joint. Flanged adapters for valves. Ftgs; ductile iron per spec Section 15062; coating, ends and lining to match pipe.
Valves:	Eccentric plug; same as exposed with extension stem and valve box. Coating M-1 per spec Section 09900.

Remarks:

1. Manual air vents shall be provided at the high points and drains provided at the low points of each reach of pipeline as specified in paragraph 15095-3.03.

3.06 PIPING SPECIFICATION SHEETS--PIPESPEC

Piping Symbol/Service:	GR—Grit	System--17

Test Requirements:

Medium:	Water; ref. spec paragraph 15050-3.04 C.
Pressure:	120 psig
Duration:	120 minutes

Gasket Requirements:

Flange:	Compressed gasketing consisting of organic fibers (Kevlar) and neoprene binder
Push-on/Mech Cpl:	Nitrile or Neoprene

Exposed Pipe and Valves:
(See drawings for pipe size and valve type)

Pipe:	Ductile iron; AWWA C151. Ref. spec Section 15062. Glass lining Conn; Flanged. Ftgs; ductile iron per spec Section 15062; coating, lining and ends to match pipe.
Valves:	Lubricated plug; cast iron, flanged, PTFE or molydisulfide coated plug, Nordstrom Fig. 143, Walworth Fig. 1797F, or equal. Swing check; spring loaded per spec Section 15118.

Remarks:

1. Manual air vents shall be provided at the high points and drains provided at the low points of each reach of pipeline as specified in paragraph 15095-3.03.

2. Provide mechanical couplings at fittings and at 10-foot centers along straight pipe runs.

3.06 PIPING SPECIFICATION SHEETS--PIPESPEC

Piping Symbol/Service:	NaOH—Sodium Hydroxide FECL—Ferric Chloride HOCL—Sodium Hypochlorite (See Remark 1) CIT—Citric Acid	System--19

Test Requirements:

Medium:	Water; ref. spec paragraph 15050-3.04 C.
Pressure:	150 psig
Duration:	120 minutes

Gasket Requirements:

Flange:	PTFE bonded EPDM, full-face gaskets, ANSI B16.1.
Push-on/Mech Cpl:	N/A

Exposed Pipe and Valves:
(See drawings for pipe size and valve type)

(All sizes)

Pipe:	CPVC; ASTM D1784, Class 12454-B, NSF certified, Sch. 80. Pipe and fittings exposed to sunlight shall be painted. Ref. spec Section 15064. Conn; plain end, solvent weld, flanged for valves 3 inch and larger. Ftgs; PVC, Sch. 80, solvent weld.

(4" and less)

Valves:	Ball; CPVC Chemtrol Tru Bloc TU Series, Asahi/America Duo Bloc TU Series, GSR TU Series, or equal, with PTFE seats and EPDM 0-rings. Diaphragm; CPVC body, Chemtrol Series PD, Posacon 677, Asahi/America, or equal with EPDM or PTFE diaphragm. Ball check; PVC body, Chemtrol Series BC, Asahi/America, or equal with EPDM or PTFE seats/seals.

(5" and larger)

Valves:	Diaphragm; ITT Dia-Flo 2558-2-M, Hills-McCanna 0649-1-38, or equal. Swing or ball check; fully lined valve body; fully coated swing check flapper or ball check ball; lining and coating shall be Hypalon or fluorinated ethylene propylene. Valve and Primer Co. APCO Series 100R, Peabody Dore Model 770, or equal.

Buried and Encased Pipe and Valves:
(See drawings for pipe size and valve type)

(All sizes)

Pipe:	CPVC; same as exposed. Provide magnetic tracer tape.

	Conn; same as exposed. Ftgs; same as exposed.
(2" and less) Valves:	Ball; same as exposed with extension stem and valve box.
(2 1/2" and larger) Valves:	Diaphragm; same as exposed with extension stem and valve box.

Remarks:

1. For HOCL service, the following shall apply:

    a. Ball valves are not permitted on HOCL service.

    b. Diaphragm valves 4 inches and smaller shall be provided with PTFE diaphragms; valves 5 inches and larger shall be provided with Hypalon or PDVF linings with PTFE diaphragms.

3.06 PIPING SPECIFICATION SHEETS--PIPESPEC

Piping Symbol/Service:	FA—Foul Air OA- Outside Air	System—22

Test Requirements:

Medium:	Air; ref. spec paragraph 15050-3.04 B.
Pressure:	15 psig
Duration:	60 minutes

Gasket Requirements, 16” and smaller:

Flange:	Gylon gasketing, Garlock style 3504
Push-on/Mech Cpl:	PTFE

Exposed Pipe and Dampers:
(See drawings for pipe size)

(16" and smaller)

Pipe:	Fiberglass reinforced plastic (FRP); ref. spec Section 13234.
Dampers:	Butterfly; ref. spec Section 13234.

(18" and larger)

Pipe:	Fiberglass reinforced plastic (FRP); ref. spec Section 13234.
Dampers:	Fiberglass reinforced plastic (FRP); ref. spec Section 13234.

Buried and Encased Pipe and Dampers: (See drawings for pipe size)

(2" and larger)

Pipe:	HDPE; ref. spec Section 15065. Provide magnetic tracer tape. Conn; fusion weld. Ftgs; same as exposed.
Dampers:	Butterfly; with extension stem and valve box, ref. spec Section 13234. Coating M-1 per spec Section 09900.

Remarks:

3.06 PIPING SPECIFICATION SHEETS--PIPESPEC

Piping Symbol/Service:	D—Drain RWP—Rainwater Pipe REC—Recycle SD—Sanitary Drain STD—Storm Drain V—Vent	System--24

Test Requirements:

Medium:	In accordance with Section 712, Uniform Plumbing Code.
Pressure:	In accordance with Section 712, Uniform Plumbing Code.
Duration:	In accordance with Section 712, Uniform Plumbing Code.

Gasket Requirements:

Flange:	Compressed gasketing consisting of organic fibers (Kevlar) and neoprene binder
Push-on/Mech Cpl:	Nitrile or neoprene

Exposed Pipe and Valves:
(See drawings for pipe size.)

(3" and smaller)

Pipe:	Cast iron soil pipe (CISP); ASTM A74. Conn; service hub and spigot compression type or hubless cast iron sanitary system per CISPI 301. Ftgs; CISP, ASTM A74, joint options to match pipe.
Valves:	None

(4" and larger)

Pipe:	Ductile iron; AWWA C151. Ref. spec Section 15062. Conn; flanged or mechanical. Ftgs; ductile iron, per spec Section 15062; ends to match pipe.
Valves:	None

Buried and Encased Pipe and Valves Under and 5 Feet Outside Building
(See drawings for pipe size.)

(3" and smaller)

Pipe:	Cast iron soil pipe (CISP); ASTM A74. Conn; service hub and spigot compression type or hubless cast iron sanitary system per CISPI 301. Ftgs; CISP, ASTM A74, joint options to match pipe.
Valves:	None

(4" and larger)

Pipe:	Ductile iron; AWWA C151. Ref. spec Section 15062. Conn; grooved end or push-on rubber gasket joint. Flanged adapters for valves. Ftgs; ductile iron per spec Section 15062; coating, lining and ends to match pipe.
Valves:	None

Buried and Encased Pipe and Valves Beyond 5 Feet Outside Building
(See drawings for pipe size.)

(3" and smaller)

Pipe:	PVC; ASTM D1784, Class 12454-B, ASTM D2665, Sch. 40. Ref. spec Section 15064. Provide magnetic tracer tape. Conn; plain end, solvent weld. Ftgs; PVC, socket type, DWV, ASTM D2665.
Valves:	None

(4" to 12")

Pipe:	Ductile iron; AWWA C151. Ref. spec Section 15062. Conn; grooved end or push-on rubber gasket joint. Flanged adapters for valves. Ftgs; ductile iron per spec Section 15062; coating, lining and ends to match pipe.
Valves:	None

(14" and larger) and under all paving for storm drain

Pipe:	Reinforced concrete pipe (RCP); ref. spec Section 15056. Conn; ASTM C443, rubber gasket type. Ftgs; concrete manhole as specified on the drawings.
Valves:	None

Remarks:

3.06 PIPING SPECIFICATION SHEETS--PIPESPEC

Piping Symbol/Service:	CD—Chemical Drain VC—Chemical Vent	System--25

Test Requirements:

Medium:	In accordance with Section 712, Uniform Plumbing Code.
Pressure:	In accordance with Section 712, Uniform Plumbing Code.
Duration:	In accordance with Section 712, Uniform Plumbing Code.

Gasket Requirements:

Flange:	N/A
Push-on/Mech Cpl:	N/A

Exposed Pipe and Valves:
(See drawings for pipe size and valve type)

(All sizes)

Pipe:	PP; ASTM D4101, Sch. 40, flame retardant. Ref. spec Section 15064. Conn; ref. spec Section 15064, flanged at valves/equipment Ftgs; PP, socket type coil fused DWV. Ref. spec Section 15064.

(4" and less)

Valves:	Ball; CPVC Chemtrol Tru Bloc TU Series, Asahi/America Duo Bloc TU Series, GSR TU Series, or equal, with PTFE seats and EPDM 0-rings.

Buried and Encased Pipe and Valves:
(See drawings for pipe size and valve type)

Pipe:	PP; same as exposed. Provide magnetic tracer tape. Conn; ref. spec Section 15064. Ftgs; same as exposed.
Valves:	None

Remarks:

3.06 PIPING SPECIFICATION SHEETS—PIPESPEC

Piping Symbol/Service: SS – Sanitary Sewer System – 33

Test Requirements:

Medium:	Air
Pressure:	5 psig above ground water pressure
Duration:	Per paragraph 15050-3.04 G

Gasket Requirements:

Push-on/Mech Cpl:	Styrene butadiene copolymer rubber.

Buried and Encased Pipe:
(See drawings for pipe size. Omit coating on encased pipe.)

(18" thru 36")

Pipe:	Ductile iron; AWWA C151. Ref. spec Section 15062, minimum pressure class 350 or thickness class 50 for pipe up to 18", minimum pressure class 250 for pipe larger than 18" Conn; push-on rubber gasket joint. Ftgs; ductile iron, per spec Section 15062; coating, lining and ends to match pipe.

Remarks:

1. All sanitary sewer pipe under roads and access drives shall be ductile iron.

2. Type 3 pipe bedding shall be provided for all finished effluent piping except where finished effluent piping is routed under roads and access drives in which case Type 5 shall be provided.

3. Type 4 pipe bedding shall be provided for all pipe sanitary sewer piping up to 24".

4. Type 5 bedding shall be provided for all sanitary sewer piping 30" and larger at the site.

Piping Symbol/Service: PRM – Membrane Permeate (between vender Supplied piping and pumps) System – 34

Test Requirements:

Medium:	Water; ref. spec paragraph 15050-3.04 C.
Pressure:	125 psig
Duration:	120 minutes

Gasket Requirements:

Flange:	Neoprene, Buna N, 1/16-inch thick, conforming to ANSI/ASME B16.5

Exposed Pipe and Valves:
(See drawings for pipe size and valve type)

(2 1/2" and smaller)

Pipe:	Stainless steel; ASTM A778, Ref. spec Section 15067. Conn; butt weld(3) or flanged, couplings where specified. Ftgs; ASTM A774, material, ends and wall thickness to match pipe.
Valves:	Ball; Jamesbury Fig. 351, Nibco T-580, or equal. Globe; Crane 7TF or 17TF, Lunkenheimer 123 or 214, or equal.

(3" and larger)

Pipe:	Stainless Steel: ASTM A778, Type 316L. Minimum wall thickness shall be 10S (Pipes 8 inches and smaller), 0.18 inches (Pipes 12 inches through 10 inches), 0.25 inches (Pipes 22 inches through 12 inches), 0.5 inches (Pipes 24 inches through 42 inches). Connections: Butt weld(3) or flanged, couplings where specified. Fittings: ASTM A774, material, ends and wall thickness to match pipe.
Valves:	Butterfly: Ref. Section 15103. Line with 10 mils of epoxy per Section 15061.

Remarks:

1. Manual air vents shall be provided at the high points and drains provided at the low points of each reach of pipeline as specified in paragraph 15095-3.03.
2. Piping between 10” PRM line and eductor is included under PIPESPEC 34.
3. No field welding is allowed except where essential to the installation of the piping system. All proposed field welding locations shall be subject to approval by the Owner. Proposed field welded locations must be specifically indicated on the piping shop drawings.

END OF SECTION

SECTION 15056

REINFORCED CONCRETE PIPE

PART 1--GENERAL

1.01 DESCRIPTION

A. SCOPE:

This section specifies reinforced concrete pipe, gaskets, and PVC lining. This section contains specifications for manholes and appurtenances.

B. PIPE DESIGNATIONS:

Reinforced concrete pipe designations shall be as follows:

Designation	Definition
RCP	Reinforced Concrete Pipe
RCP-LHP	Reinforced Concrete Low Head Pressure Pipe

C. DEFINITIONS:

1. PIPE JOINT: The area approximately 12 inches each way from the centerline of the visible gap between pipe lengths.

2. PIPE LENGTH: The pipe between two joints; part of a pipe section.

3. PIPE SECTION: The reach of pipeline between two successive manholes.

1.02 QUALITY ASSURANCE

A. REFERENCES:

This section contains references to the following documents. They are a part of this section as specified and modified. Where a referenced document contains references to other standards, those documents are included as references under this section as if referenced directly. In the event of conflict between the requirements of this section and those of the listed documents, the requirements of this section shall prevail.

Unless otherwise specified, references to documents shall mean the documents in effect at the time of Advertisement for Bids or Invitation to Bid (or on the effective date of the Agreement if there were no Bids). If referenced documents have been discontinued by the issuing organization, references to those documents shall mean the replacement documents issued or otherwise identified by that organization or, if there are no replacement documents,

the last version of the document before it was discontinued. Where document dates are given in the following listing, references to those documents shall mean the specific document version associated with that date, regardless of whether the document has been superseded by a version with a later date, discontinued or replaced.

Reference	Title
ASTM C76	Reinforced Concrete Culvert, Storm Drain and Sewer Pipe
ASTM C139	Concrete Masonry Units for Construction of Catch Basins and Manholes
ASTM C150	Portland Cement
ASTM C361	Reinforced Concrete Low-Head Pressure Pipe
ASTM C443	Joints for Circular Concrete Sewer and Culvert Pipe, Using Rubber Gaskets
ASTM C478	Precast Reinforced Concrete Manhole Sections
ASTM C497	Testing Concrete Pipe, Sections, or Tile
AWWA C600	Installation of Ductile-Iron Water Mains and Their Appurtenances

B. TESTING:

1. GENERAL: The Construction Manager shall be notified of the place and time of testing 1 week prior to the commencement of testing.

2. CONCRETE COMPRESSION TESTS: Compression tests shall be as specified in ASTM C76, Section 11.4.1.

3. D-LOAD TESTS: Pipe shall be tested in accordance with ASTM C76, Section 11.3 and ASTM C497. Loads used for testing shall be the load to produce the 0.01-inch crack or the design test load, whichever is less.

One percent of the total number of pipes, with a minimum of three pipe lengths, of each class, size and wall type shall be tested.

4. HYDROSTATIC TESTS: Pipe specified to meet hydrostatic strength requirements shall be tested in accordance with ASTM C361, Section 10.4. Both pipe and joints shall be tested. The number and method of selection of pipe for testing, as well as the determination of acceptability for delivery to the job site, shall be in accordance with ASTM C361, Section 10.

PART 2--PRODUCTS

2.01 MATERIALS

A. PIPE:

Unless otherwise specified, pipe shall conform to the following specifications:

1. RCP: ASTM C76, Class III.
2. RCP-LHP: ASTM C361, Class A-25.

Cement shall be ASTM C150, Type II.

B. GASKETS:

Gaskets shall conform to Section 15075 and the following specifications:

1. RCP: ASTM C443, Section 5.
2. RCP-LHP: ASTM C361, Section 6.9.

C. PRECAST CONCRETE MANHOLES:

Precast concrete manhole sections shall conform to the requirements of ASTM C478 or C139. Cement shall be ASTM C150, Type II. Minimum wall thickness for nonreinforced sections shall be 6 inches. Minimum wall thickness for reinforced sections shall be 4 inches. Joints shall be tongue and groove mortared unless otherwise specified.

D. MANHOLE MASONRY UNITS:

Manhole masonry units shall be concrete manhole block conforming to ASTM C139 except that the nominal horizontal thickness shall be 6 inches measured radially. Semicircular grooves, 1 inch diameter, shall be provided in the ends.

2.02 MANUFACTURE

A. PIPE:

1. GENERAL: Unless otherwise specified, all pipe used for services other than storm drains shall be manufactured by the centrifugally spun or vertically wet cast method. Pipe manufactured by the vertically wet cast method shall be cast with the spigot end down. Reinforcing steel for each length of pipe shall be held in place throughout the casting operation. Lift holes are not acceptable.

2. RCP: Pipe shall be manufactured in conformance with ASTM C76. Joints shall be rubber gasket conforming to ASTM C443, unless otherwise specified.

3. RCP-LHP: RCP-LHP shall be ASTM C361.

B. RUBBER GASKET JOINTS:

Joints shall use either concrete bell and spigot or a double spigot and sleeve. In the latter case, the sleeve shall be a reinforced thermoset plastic collar or a steel band. If the steel band is provided, a minimum of 12 mils of coating system EP as specified in Section 09900 shall be applied in two coats of 6 mils minimum per coat.

C. LENGTH AND BEVELS:

Pipe shall be fabricated in nominal lengths of at least 8 feet except where shorter lengths are required to meet special conditions. Pipe ends may be beveled a maximum of 5 degrees to accommodate changes in alignment or curved alignments of the pipeline.

2.03 PRODUCT DATA

The following information shall be provided in accordance with Section 01300.

A. FABRICATION DRAWINGS:

Drawings shall illustrate details of wall thickness, pipe joint, joint gasket, and reinforcement. Reinforcement details shall include the type of cage, the location of the cages in the pipe wall, the size and spacing of circumferential and longitudinal reinforcing steel, and the cross-sectional area of reinforcing steel in each cage per lineal foot of pipe. The gasket details shall include the diameter of the cross section and the circumferential length.

B. LAYOUT DRAWINGS:

Layout drawings shall illustrate placement of each pipe length including fittings. Pipe lengths and joints shall be identified with a numbering system.

C. TEST RESULTS:

The Contractor shall provide results of the following tests as specified in the referenced paragraphs of this section:

	Test	Paragraph
1.	Concrete compression	1.02 B.2.
2.	D-load	1.02 B.3.
3.	Hydrostatic	1.02 B.4.
4.	Procedures for pipe acceptance	3.03 A., 3.03 B., 3.03 C.

D. CERTIFICATION:

The Contractor shall provide certified copies of laboratory reports from his gasket supplier indicating conformance with the specified requirements of Section 15075 and this specification for each shipment of gaskets.

PART 3--EXECUTION

3.01 PIPE LAYING

A. RCP:

Preparation of bedding and backfill shall be as specified in Section 02200 and the drawing details. Pipe shall be laid with uniform bearing under the full length of the barrel of the pipe.

The interior of the pipeline shall be cleaned as the work progresses.

The line and grade of any one pipe shall not deviate more than that specified in the following table. The allowable deviation is not cumulative.

Pipe length, feet	Maximum deviation per pipe length, feet
8	0.06
10	0.09
12	0.11
16	0.14

Assembled pipe joints shall be kept in compression until the placement of the initial backfill is complete.

B. RCP-LHP:

Pipe laying shall conform to paragraph 15056-3.01 A of this specification and AWWA C600. Anchorage shall be provided at fittings and where specified. Details of thrust restraints and thrust blocks shall be in accordance with AWWA C600 and as specified.

C. JOINTING:

During jointing, neither mortar nor buttering compound is acceptable on either the exterior or interior of the joints. After jointing, joints over 3/4 inch shall be mortared.

3.02 STRUCTURES

Structures shall be as specified. Openings for future connections shall be sealed with a precast concrete plug made watertight with mastic compound or rubber gaskets. Concrete mortar shaping within any structure shall be as specified in Division 3.

3.03 PIPELINE ACCEPTANCE

A. RCP:

After backfilling and restoration of surfaces, pipelines shall be cleaned. Pipelines 21 inches or less in diameter shall be cleaned by the sewer ball method unless the pipeline can be shown to be clean by visual inspection.

B. RCP LEAKAGE TESTS:

1. GENERAL: Leakage tests shall be completed after pipelines have been cleaned of obstructions and inspected by the Construction Manager.

2. SECTION LEAKAGE TEST: Each section of pipeline shall be tested by closing the lower end of the pipe to be tested and the inlet pipe of the upper manhole with stoppers and then filling the pipe and manhole with water to a level 5 feet above the crown of the open pipe in the upper manhole or, if groundwater is present, 6 feet above the section's average adjacent groundwater level. The line shall be filled at least 1 hour prior to testing and shall be tested for 6 hours minimum, maintaining the specified head by measured additions of water. The sum of these additions shall be the measured leakage for the test period. The allowable leakage shall not exceed 0.05 gallon per hour per inch of diameter per 100 feet of pipe being tested.

3. JOINT LEAKAGE TEST: For pipes 48 inches in diameter and larger, the Contractor may test each individual pipe joint for leakage with portable bulkheads or other testing apparatus as an alternative to testing each section. Each joint shall be tested as an integral unit. The test pressure shall be equivalent to the head of water specified for the section leakage test. The allowable leakage shall be the same as that specified for the pipeline section leakage test. The Contractor shall record the test pressure, time under pressure, and actual leakage of each joint tested.

C. RCP-LHP LEAKAGE TESTS:

Pipelines shall be tested in accordance with AWWA C600 except that test pressures and allowable leakage shall be as specified in Section 15050.

END OF SECTION

SECTION 15061

STEEL PIPE

PART 1--GENERAL

1.01 DESCRIPTION

This section specifies steel pipe and fittings.

1.02 QUALITY ASSURANCE

A. REFERENCES:

This section contains references to the following documents. They are a part of this section as specified and modified. Where a referenced document contains references to other standards, those documents are included as references under this section as if referenced directly. In the event of conflict between the requirements of this section and those of the listed documents, the requirements of this section shall prevail.

Unless otherwise specified, references to documents shall mean the documents in effect at the time of Advertisement for Bids or Invitation to Bid (or on the effective date of the Agreement if there were no Bids). If referenced documents have been discontinued by the issuing organization, references to those documents shall mean the replacement documents issued or otherwise identified by that organization or, if there are no replacement documents, the last version of the document before it was discontinued. Where document dates are given in the following listing, references to those documents shall mean the specific document version associated with that date, regardless of whether the document has been superseded by a version with a later date, discontinued or replaced.

Reference	Title
ANSI B16.3	Malleable Iron Threaded Fittings, Class 150 and 300
ANSI B16.9	Factory-Made Wrought Steel Buttwelding Fittings
ANSI B16.11	Forged Steel Fittings, Socket-Welding and Threaded
ASTM A36/A36M	Structural Steel
ASTM A47	Ferritic Malleable Iron Castings
ASTM A53	Pipe, Steel, Black and Hot-Dipped, Zinc-Coated Welded and Seamless
ASTM A105/A105M	Forgings, Carbon Steel, for Piping Components
ASTM A106 REV A	Seamless Carbon Steel Pipe for High-Temperature Service
ASTM A197	Cupola Malleable Iron
ASTM A234/A234M	Pipe Fittings of Wrought Carbon Steel and Alloy Steel for Moderate and Elevated Temperatures

Reference	Title
ASTM A283/A283M REV A	Low and Intermediate Tensile Strength Carbon Steel Plates, Shapes and Bars
ASTM A536	Ductile Iron Castings
ASTM A570/A570M	Hot-Rolled Carbon Steel Sheet and Strip, Structural Quality
ASTM A572/A572M REV B	High Strength Low Alloy Columbium-Vanadium Steels of Structural Quality
AWWA C200	Steel Water Pipe 6 Inches and Larger
AWWA C205	Cement-Mortar Protective Lining and Coating for Steel Water Pipe--4 In. and Larger-- Shop Applied
AWWA C206	Field Welding of Steel Water Pipe
AWWA C207	Steel Pipe Flanges for Waterworks Services--Sizes 4 In. Through 144 In.
AWWA C208	Dimensions for Fabricated Steel Water Pipe Fittings
AWWA C209	Cold-Applied Tape Coating for Special Sections, Connections, and Fittings for Steel Water Pipelines
AWWA C210	Liquid Epoxy Coating Systems for the Interior and Exterior of Steel Water Pipe
AWWA C214	Tape Coating Systems for the Exterior of Steel Water Pipelines
AWWA C600	Installation of Ductile-Iron Water Mains and Their Appurtenances
AWWA M11	Steel Pipe--A Guide for Design and Installation
SSPC-SP10	Near-White Blast Cleaning

B. TESTING:

Factory testing shall conform to the requirements of ASTM A53, ASTM A106, or AWWA C200 as applicable.

PART 2--PRODUCTS

2.01 PIPE MATERIALS

Steel pipe and fittings shall be provided in accordance with ASTM A53, ASTM A106, or AWWA C200 as specified in Section 15050, Piping Systems.

Steel for pipe fabricated to meet requirements of AWWA C200 shall conform to the requirements of ASTM A36, ASTM A572, Grade 42, ASTM A570, Grades 33 and 36, or ASTM A283, Grade D. Steel for ASTM A53 and ASTM A106 pipe shall be Grade B.

2.02 PIPE MANUFACTURE

Unless otherwise specified, ASTM A53 pipe shall be Type E, electric resistance welded or Type S, seamless pipe as specified in Section 15050. The minimum wall thickness for ASTM A53 or ASTM A106 pipe shall be Schedule 40 for pipe 10 inch diameter and less and 3/8 inch for pipe 12 inch through 24 inch diameter. Increased shell thickness shall be provided where specified.

AWWA C200 pipe shall be straight or spiral seam. The minimum wall thickness shall be 7 gage for pipe 6 inch through 24 inch diameter and 1/4 inch for pipe 26 inch diameter and larger. Increased shell thickness shall be provided where specified. Final thickness to be based on actual design that includes requirements for working + surge pressures, handling and installation requirements, and safety allowances.

2.03 CONNECTIONS

Connections shall be as specified in Section 15050 and shall conform to Section 15085. Coating for buried connections shall be as specified in paragraph 15085-2.06.

2.04 FITTINGS AND APPURTENANCES

Malleable iron threaded fittings and appurtenances shall conform to the requirements of ASTM A47 or ASTM A197, ANSI B16.3.

Unless otherwise specified, steel fittings and appurtenances shall conform to the requirements of ASTM A234, ASTM A105, or ANSI B16.11; and fabricated steel fittings and appurtenances shall conform to AWWA C208.

Fittings for grooved end piping systems shall be full flow cast fittings, steel fittings, or segmentally welded fittings with grooves or shoulders designed to accept grooved end couplings. Cast fittings shall be cast of ductile iron conforming to ASTM A536 or malleable iron conforming to ASTM A47. Standard steel fittings, including large size elbows, shall be forged steel conforming to ASTM A106. Standard segmentally welded fittings shall be fabricated of Schedule 40 carbon steel pipe.

Unless otherwise specified, all fittings shall be rated for pressure and loadings equal to the pipe.

2.05 PIPE LINING

A. EPOXY:

Unless otherwise specified, pipe and fittings shall be lined with a liquid epoxy as specified in AWWA C210 with the following exceptions:

1. No coal tar products shall be incorporated in the liquid epoxy.

2. The curing agent may be an amidoamine as well as the other curing agents listed in AWWA C210.

The lining shall be applied to a minimum thickness of 16 mils in not less than two coats.

B. CEMENT MORTAR:

Where specified, pipe and fittings shall be lined with cement mortar as specified in AWWA C205. Fittings and specials larger than 24 inches, not fabricated from centrifugally lined straight sections, shall require 2-inch by 4-inch by 13-gage self-furring wire mesh reinforcement for hand-applied lining.

C. HIGH TEMPERATURE SERVICE EPOXY:

Where specified, steel pipe and fittings shall be epoxy lined with not less than 10 mils of epoxy suitable for temperatures of 225 degrees F. Epoxy lining shall be 3M Scotchkote 306, Porter MCR 65 High Solids Epoxy, or equal. Surfaces shall be prepared in accordance with SSPC-SP 10 Near White Blast Cleaning, and the lining applied as recommended by the manufacturer.

D. GLASS LINING:

Where specified, pipe and fittings shall be glass lined with a dual layer coating system of vitreous material to a minimum thickness of 10 mils. Glass lining shall provide continuous coverage as tested by a low voltage holiday detector with only isolated voids permitted due to casting anomalies. Voids, other than isolated pinholes, shall be cause for rejection.

Pipe and fittings shall have all internal welds ground smooth and any voids or slag holes ground out, rewelded and ground smooth.

Glass lining shall be Ferrock MEH-32, Vitco SG-14, or equal.

2.06 PIPE COATING

A. EPOXY:

Unless otherwise specified, pipe and fittings shall be coated with a liquid epoxy as specified in AWWA C210 with the following exceptions:

1. No coal tar products shall be incorporated in the liquid epoxy.

2. The curing agent may be an amidoamine as well as the other curing agents listed in AWWA C210.

The coating shall be applied to a minimum thickness of 16 mils in not less than two coats.

B. POLYETHYLENE TAPE:

Where specified, pipe and fittings shall be coated and wrapped with prefabricated multilayer cold applied polyethylene tape coating in accordance with AWWA C214. The coating application shall be a continuous step operation in conformance with AWWA C214, Section 3. The total coating thickness shall be not less than 50 mils for pipe 24 inches and smaller and not less than 80 mils for pipe 26 inches and larger.

2.07 FUSION EPOXY COATING AND LINING

Where specified, steel pipe and fittings shall be fusion epoxy coated and lined. The fusion epoxy coating shall be 3M Scotchkote 203, or equal. Surface preparation shall be in accordance with SSPC-SP 10 Near White Blast Cleaning. The application method shall be by the fluidized bed method and shall attain 12 mils minimum dry film thickness.

Field welds, connections and otherwise damaged areas shall be coated and patched according to the manufacturer's instructions with 3M Scotchkote 306.

2.08 JOINT GASKETS

Joint gaskets shall be as specified in Section 15075.

2.09 PRODUCT DATA

The following information shall be provided in accordance with Section 01300:

1. Affidavits of Compliance with AWWA C200, ASTM A53, or ASTM A106 as applicable.

2. Contractor's layout drawings as specified in paragraph 15050-2.04.

PART 3--EXECUTION

3.01 INSTALLATION

A. GENERAL:

Pipe shall be installed in accordance with AWWA M11, Chapter 16. Welded joints shall be in accordance with AWWA C206 and Section 15085.

Sleeve-type mechanical pipe couplings shall be provided in accordance with AWWA M11 and paragraph 15085-2.02 A.

Pipe lining and coatings at field joints shall be applied as specified in paragraphs 15061-2.05 and 2.06.

Unless otherwise specified, buried mechanical couplings and valves shall be field coated as specified in paragraph 15085-2.06.

B. ANCHORAGE:

Anchorage shall be provided as specified. Calculations and drawings for proposed alternative anchorage shall be submitted in accordance with Section 01300.

3.02 TESTING

Hydrostatic testing shall be in accordance with Section 4 of AWWA C600 except that test pressures and allowable leakage shall be as listed in Section 15050.

END OF SECTION

SECTION 15062

DUCTILE IRON PIPE

PART 1--GENERAL

1.01 DESCRIPTION

A. SCOPE:

This section specifies ductile iron pipe, ductile fittings and gaskets.

B. DEFINITION:

Where cast iron pipe is specified, the term and symbol shall mean ductile iron pipe.

1.02 REFERENCES

This section contains references to the following documents. They are a part of this section as specified and modified. Where a referenced document contains references to other standards, those documents are included as references under this section as if referenced directly. In the event of conflict between the requirements of this section and those of the listed documents, the requirements of this section shall prevail.

Unless otherwise specified, references to documents shall mean the documents in effect at the time of Advertisement for Bids or Invitation to Bid (or on the effective date of the Agreement if there were no Bids). If referenced documents have been discontinued by the issuing organization, references to those documents shall mean the replacement documents issued or otherwise identified by that organization or, if there are no replacement documents, the last version of the document before it was discontinued. Where document dates are given in the following listing, references to those documents shall mean the specific document version associated with that date, regardless of whether the document has been superseded by a version with a later date, discontinued or replaced.

Reference	Title
ANSI A21.14	Ductile-Iron Fittings 3 In. Through 24 In., for Gas
ANSI A21.52	Ductile-Iron Pipe, Centrifugally Cast, in Metal Molds or Sand Lined Molds for Gas
ANSI B16.1	Cast Iron Pipe Flanges and Flanged Fittings Class 25, 125, 250, and 800
ANSI B16.5	Pipe Flanges and Flanged Fittings
ASTM A716	Ductile-Iron Culvert Pipe
ASTM C150	Portland Cement

Reference	Title
AWWA C104 (ANSI A21.4)	Cement-Mortar Lining for Ductile- Iron and Gray-Iron Pipe and Fittings for Water
AWWA C110 (ANSI A21.10)	Ductile-Iron and Gray-Iron Fittings, 3 In. Through 48 In., for Water and Other Liquids
AWWA C111 (ANSI A21.11)	Rubber-Gasket Joints for Ductile- Iron and Gray-Iron Pressure Pipe and Fittings
AWWA C115 (ANSI A21.15)	Flanged Ductile-Iron and Gray-Iron Pipe With Threaded Flanges
AWWA C150 (ANSI A21.50)	Thickness Design of Ductile-Iron Pipe
AWWA C151 (ANSI A21.51)	Ductile-Iron Pipe, Centrifugally Cast, in Metal Molds or Sand-Lined Molds, for Water or Other Liquids
AWWA C153 (ANSI A21.53)	Ductile-Iron Compact Fittings, 3 In. Through 12 In. for Water and Other Liquids
AWWA C600	Installation of Ductile-Iron Water Mains and Their Appurtenances
AWWA C606	Grooved and Shouldered Type Joints

PART 2--PRODUCTS

2.01 GENERAL

Pipe design, materials and manufacture shall comply with the following documents:

Item	Document
Thickness design	AWWA C150
Manufacturing requirements	
Water or other liquid	AWWA C151
Gas	ANSI A21.52
Gravity service pipe	ASTM A716
Joints	
Rubber gasket	AWWA C111
Threaded flange	AWWA C115
Fittings	
Water or other liquid	AWWA C110/AWWA C153
Gas	ANSI A21.14

Item	Document
Cement mortar lining	AWWA C104

2.02 PIPE

Unless otherwise specified, ductile iron pipe shall be Class 50 and have nominal laying lengths of 18 or 20 feet. For grooved-end pipe, wall thickness shall be minimum Class 53 except where the specified pressure requires heavier pipe.

2.03 GASKETS

Unless otherwise specified, gasket stock shall be a synthetic rubber compound in which the elastomer is nitrile or neoprene. The compound shall contain not less than 50 percent by volume nitrile or neoprene and shall be free from factice, reclaimed rubber and other deleterious substances. Gaskets shall, in addition, comply with AWWA C111 for push-on and mechanical joints and with AWWA C606 for grooved end joints.

2.04 FITTINGS

Unless otherwise specified, fittings shall conform to AWWA C110. Ends shall be flanged, restrained mechanical joint, restrained push-on, or grooved to suit the conditions specified. The AWWA C153 compact ductile iron fittings in sizes 3 through 12 inches are an acceptable substitute for standard fittings unless otherwise specified. Long-radius elbows shall be provided where specified. Grooved end fittings shall comply with paragraph 15050-1.02 B.

2.05 JOINTS

A. UNRESTRAINED JOINTS:

1. PUSH-ON JOINTS: Unrestrained joints, where specified, shall be the rubber ring compression, push-on type joint suitable for buried service. Unrestrained joints shall be the Fastite Joint as manufactured by American Cast Iron Pipe Company, the Tyton Joint as manufactured by U.S. Pipe, or equal. This joint is not permitted on fittings or specials, unless otherwise specified. Unless otherwise specified, joints shall have an allowable deflection up to 5 degrees at specified pressures. Joint assembly and field cut joints shall be made in strict conformance with AWWA C600 and manufacturer's recommendations.

2. MECHANICAL JOINTS: Where specified, mechanical joints for above or below ground service shall meet the requirements of ANSI/AWWA A21.10/C110 and ANSI/AWWA A21.11/C111. Gaskets and bolts and nuts shall comply with paragraphs 15062-2.03 and 2.05 D, respectively.

B. RESTRAINED JOINTS:

1. GENERAL: Unless otherwise specified, restrained joints are required for all exposed and buried piping. Unless otherwise specified, restrained joints shall be flanged or grooved end for exposed service and restrained push-on for buried service.

2. PUSH-ON JOINTS: Restrained push-on joints shall be as specified in paragraph 15062-2.05 A.1., modified for restraint. Joints shall be the Flex-Ring or Lok-Ring Joint as manufactured by American Cast Iron Pipe Company, TR Flex Joint as manufactured by US Pipe, or equal. Restrained joints shall be capable of being deflected after full assembly. Joint assembly shall be in strict conformance with AWWA C600 and manufacturer's recommendations. No field cuts of restrained pipe are permitted without prior approval of the Engineer.

3. FLANGE ASSEMBLIES: Unless otherwise specified, flanges shall be ductile iron and shall be threaded-on flanges conforming to ANSI/AWWA A21.15/C115 or cast-on flanges conforming to ANSI/AWWA A21.10/C110. Flanges shall be adequate for 250 psi working pressure. Bolt circle and bolt holes shall match those of ANSI B16.1, Class 125 flanges and ANSI B16.5, Class 150 flanges. Where specified, flanges shall be threaded-on or cast-on flanges conforming to ANSI B16.1, Class 250.

Unless otherwise specified, bolts and nuts for flange assemblies shall conform with paragraph 15085-2.01 C. Gaskets shall be as specified in paragraph 15085-2.01 B.

4. MECHANICAL JOINTS: Where specified, restrained mechanical joints shall be the positive restraint type. Mechanical joints with retainer glands are not acceptable.

Locked mechanical hydrant tees, bends and adapters are an acceptable substitute for anchoring fire hydrants and valves to the pipe main.

C. BALL AND SOCKET FLEXIBLE JOINT PIPE:

Ball and socket flexible joint pipe shall be the boltless type and shall allow a maximum joint deflection of 15 degrees. Each joint shall be provided with a retainer lock to prevent rotation after assembly. Joints shall be the Flex-Lok Joint as manufactured by American Cast Iron Pipe Company, USIflex as manufactured by U.S. Pipe, or equal.

D. BOLTS AND NUTS:

Corrosion-resistant bolts and nuts for use with ductile iron joints shall be high-strength, low-alloy steel as specified in ANSI/AWWA C111/A21.11.

2.06 PIPE COATING

Unless otherwise specified, pipe and fittings shall be coated with asphaltic material as specified in AWWA C151.

2.07 PIPE LINING

A. ASPHALTIC LINING:

Unless otherwise specified, pipe and fittings shall be lined with asphaltic material as specified in AWWA C151.

B. CEMENT MORTAR LINING:

Where specified, interior surfaces of pipe and fittings shall be cement mortar lined in accordance with AWWA C104. Cement shall be ASTM C150, Type II or V, low alkali, containing less than 0.60 percent alkalies.

C. GLASS LINING:

For all grit piping and other services where specified, pipe and fittings shall be glass lined with a dual layer coating system of vitreous material to a minimum thickness of 10 mils. Glass lining shall provide continuous coverage as tested by a low voltage holiday detector with only isolated voids permitted due to casting anomalies. Voids, other than isolated pinholes, shall be cause for rejection.

Ductile or cast iron pipe shall be bored, machined, or grit blasted to remove any voids, protrusions or surface irregularities to obtain a smooth continuous surface for glass lining. Pipe shall be at least Class 53 on diameters of 6 inches or greater except for pipe to be bored or machined which shall be of a suitable wall thickness to assure boring or machining will not impair minimum wall thickness required for Class 53. Four-inch pipe shall be Class 56. Fittings shall be ground or grit blasted to remove any voids, protrusions or surface irregularities.

Glass lining shall be Ferrock MEH-32, Vitco SG-14, or equal.

2.08 PRODUCT DATA

The following information shall be provided in accordance with Section 01300:

1. Shop drawings.

2. Alignment drawings.

3. Certifications specified in the following documents:

ANSI A21.14, paragraph 14-4.2
ANSI A21.52, paragraph 52-4.2
ASTM A716, paragraph 4.2
AWWA C110, paragraph 10-5.3
AWWA C111, paragraph 11-7.1
AWWA C115, paragraph 15-4.2
AWWA C151, paragraph 51-5.2
AWWA C153, paragraph 53-6.3
AWWA C606, paragraph 4.1.1.1

PART 3--EXECUTION

3.01 INSTALLATION

A. GENERAL:

Piping runs specified on the drawings shall be followed as closely as possible. Proposed deviations shall be submitted in accordance with Section 01300.

Pipe shall be installed in accordance with AWWA C600.

Connections to existing structures and manholes shall be made so that the finished work will conform as nearly as practicable to the requirements specified for the new manholes, including necessary concrete work, cutting and shaping. Concrete mortar shaping within any structure and manhole shall be as specified.

B. INSULATING SECTIONS:

Where a metallic nonferrous pipe or appurtenance is connected to ferrous pipe or appurtenance, an insulating section shall be provided as specified in paragraph 15085-3.05.

C. ANCHORAGE:

Anchorage shall be provided as specified. Calculations and drawings for proposed alternative anchorage shall be submitted in accordance with Section 01300.

3.02 ACCEPTANCE TESTING

Hydrostatic pressure tests shall be conducted in accordance with Section 4 of AWWA C600 except that test pressures and allowable leakage shall be as listed in Section 15050.

The Contractor shall conduct the tests in the presence of the Engineer.

END OF SECTION

SECTION 15064

PLASTIC PIPE

PART 1--GENERAL

1.01 DESCRIPTION

A. SCOPE:

This section specifies polyvinylchloride, chlorinated polyvinylchloride, polyethylene, and polypropylene pipe and fittings. High density polyethylene (HDPE) piping for gravity and pressure pipelines is specified in Section 15065.

B. PIPE DESIGNATIONS:

For use in the Piping System Specification Sheets (PIPESPEC) in Section 15050 and in this section, the following plastic pipe designations are defined:

Designation	Definition
PVC	Polyvinylchloride
CPVC	Chlorinated polyvinylchloride
PE	Polyethylene
PP	Polypropylene

1.02 QUALITY ASSURANCE

A. REFERENCES:

This section contains references to the following documents. They are a part of this section as specified and modified. Where a referenced document contains references to other standards, those documents are included as references under this section as if referenced directly. In the event of conflict between the requirements of this section and those of the listed documents, the requirements of this section shall prevail.

Unless otherwise specified, references to documents shall mean the documents in effect at the time of Advertisement for Bids or Invitation to Bid (or on the effective date of the Agreement if there were no Bids). If referenced documents have been discontinued by the issuing organization, references to those documents shall mean the replacement documents issued or otherwise identified by that organization or, if there are no replacement documents, the last version of the document before it was discontinued. Where document dates are given in the following listing, references to those documents shall mean the specific document version associated with that date, regardless of whether the document has been superseded by a version with a later date, discontinued or replaced.

Reference	Title
ASTM D1248	Polyethylene Plastics Molding and Extrusion Materials
ASTM D1784	Rigid Poly (Vinyl Chloride) (PVC) Compounds and Chlorinated Poly (Vinyl Chloride) (CPVC) Compounds
ASTM D1785	Poly (Vinyl Chloride) (PVC) Plastic Pipe, Schedules 40, 80, and 120
ASTM D2241	Poly (Vinyl Chloride) (PVC) Plastic Pipe (SDR-PR)
ASTM D2464	Threaded Poly (Vinyl Chloride) (PVC) Plastic Pipe Fittings, Schedule 80
ASTM D2466	Poly (Vinyl Chloride) (PVC) Plastic Pipe Fittings, Schedule 40
ASTM D2467	Socket-Type Poly (Vinyl Chloride) (PVC) Plastic Pipe Fittings, Schedule 80
ASTM D2564	Solvent Cements for Poly (Vinyl Chloride) (PVC) Plastic Pipe and Fittings
ASTM D2657	Heat-Joining Polyolefin Pipe and Fittings
ASTM D2665	Poly (Vinyl Chloride) (PVC) Plastic Drain, Waste, and Vent Pipe and Fittings
ASTM D3034	Type PSM Poly (Vinyl Chloride) (PVC) Sewer Pipe and Fittings
ASTM D4101	Propylene Plastic Injection and Extrusion Materials
ASTM F402	Safe Handling of Solvent Cements and Primers Used for Joining Thermoplastic Pipe and Fittings
ASTM F437	Threaded Chlorinated Poly (Vinyl Chloride) (CPVC) Plastic Pipe Fittings, Schedule 80
ASTM F438	Socket-Type Chlorinated Poly (Vinyl Chloride) (CPVC) Plastic Pipe Fittings, Schedule 40
ASTM F439	Socket-Type Chlorinated Poly (Vinyl Chloride) (CPVC) Plastic Pipe Fittings, Schedule 80
ASTM F441	Chlorinated Poly (Vinyl Chloride) (CPVC) Plastic Pipe, Schedules 40 and 80
ASTM F477	Elastomeric Seals (Gaskets) for Joining Plastic Pipe
ASTM F493	Solvent Cements for Chlorinated Poly (Vinyl Chloride) (CPVC) Plastic Pipe and Fittings

PART 2--PRODUCTS

2.01 PVC PIPE

A. PRESSURE PIPE:

PVC material for pipe and fittings shall conform to ASTM D1784, Class 12454-B. Pipe and fittings shall either be in accordance with ASTM D1785 or shall conform to ASTM D2241 for standard dimension ratios: 160 psi pipe--SDR 26; 200 psi pipe--SDR 21; 250 psi--SDR 17. Pressure rating for pipe shall be in excess of test pressure specified in Section 15050. Neoprene gaskets with push-on joints shall conform to ASTM F477.

Schedule 80 PVC socket type fittings shall conform to ASTM D2467. Schedule 40 PVC fittings shall conform to ASTM D2466. PVC solvent weld cement for socket connections shall meet the requirements of ASTM D2564. Schedule 80 PVC threaded fittings shall conform to ASTM D2464. Fittings for gasketed pipe shall be ductile iron or steel push-on IPS-sized pressure fittings rated for use with the specified class of PVC pipe. Unless otherwise specified, fittings shall be lined and coated in accordance with Section 15061 or Section 15062 as applicable.

B. NONPRESSURE PIPE:

1. GRAVITY SEWER PIPE: PVC material for sewer pipe and fittings shall conform to Class 12454-B, as defined in ASTM D1784. Pipe and fittings shall meet the requirements of ASTM D3034 for SDR 35. Neoprene gaskets with push-on joints shall conform to ASTM F477.

2. DRAIN, WASTE AND VENT PIPE: PVC material for drain waste and vent (DWV) pipe and fittings shall conform to Class 12454-B, ASTM D1784. Pipe and fittings shall conform to ASTM D2665. Unless otherwise specified, connections shall be solvent weld. Connections to traps, closet flanges, and nonplastic pipe shall be with approved adapter type fittings designed for intended use. Solvent weld cement for socket connections shall meet requirements of ASTM D2564.

2.02 CPVC PIPE

CPVC material for pipe and fittings shall conform to ASTM D1784, Class 23447-B. Pipe and fittings shall be in accordance with ASTM F441. Neoprene gaskets with push-on joints shall conform to ASTM F477.

Schedule 80 CPVC socket type fittings shall conform to ASTM F439. Schedule 40 CPVC socket type fittings shall conform to ASTM F438. CPVC solvent weld cement for socket connections shall meet the requirements of ASTM F493. Schedule 80 CPVC threaded type fittings shall conform to ASTM F437.

2.03 PE PIPE

PE pipe shall meet the requirements of ASTM D1248, Type III, Grade P 34, Class C, 100 psi or as specified in Section 15050, whichever is higher. Fittings shall be of the same material, molded socket fusion for sizes 4 inch diameter and smaller and molded or fabricated butt fusion for sizes 6 inch and larger. Fittings shall be 125 psi or as specified in Section 15050, whichever is higher. Heat fusion welding shall be in conformance with ASTM D2657.

2.04 PP PIPE

A. PRESSURE PIPE:

PP pipe and fittings shall be formulated of polypropylene conforming to ASTM D4101, SDR 11, butt fusion type. Pipe shall be 150 psi rated in all sizes. Heat fusion welding shall be in conformance with manufacturer's recommendation.

B. DRAIN, WASTE AND VENT PIPE:

PP drain, waste and vent (DWV) pipe and fittings shall be made from flame retardant, Schedule 40, polypropylene (PPFR) plastic as defined in ASTM D4101. Pipe and fittings used for buried piping and in concealed locations shall be joined by electrical fusion coils energized by a variable low-voltage power supply to completely fuse the interface between the pipe and socket and form a completely homogenous structure. Unless otherwise specified, mechanical joint fittings may be used under bench or in exposed locations where future disassembly is desired. The mechanical method shall be in conformance with the manufacturer's recommendation.

2.05 PRODUCT DATA

The following information shall be provided in accordance with Section 01300:

1. Manufacturer's certificates of compliance with the specified standards and Contractor's layout drawings.

PART 3--EXECUTION

3.01 INSTALLATION

CPVC and PVC pipe 3 inches in diameter and smaller shall be joined by means of socket fittings and solvent welding in conformance with ASTM F402. Solvent-cemented joints shall be made in strict compliance with the manufacturer's/supplier's instructions and recommended procedures. Unless otherwise specified, PVC pipe 4 inches in diameter and greater shall be joined by means of gasketed push-on joints and steel or ductile iron push-on or mechanical joint fittings. Fittings shall be lined and coated as specified in Section 15061 or 15062. Unless otherwise specified, PVC and CPVC piping exposed to sunlight shall be painted with coating system L-2 as specified in Section 09900.

Connections to different types of pipe shall be by means of flanges, specified adapters or transition fittings. Where sleeve type couplings are used, both shall be uniformly torqued in accordance with pipe manufacturer's recommendation. Foreign material shall be removed from the pipe interior prior to assembly.

Unless otherwise specified, PE pipe and fittings 4 inch diameter and smaller shall be joined by means of thermal socket fusion and pipe 6 inch and larger by thermal butt fusion. Butt-fusion joining of the pipes and fittings shall be performed with special joining equipment in accordance with procedures recommended by pipe manufacturer. Tensile strength at yield of butt-fusion joints shall not be less than pipe. Flanged adapters shall be provided for connection to valves and where specified.

3.02 TESTING

Testing of plastic piping shall be as specified in Section 15050.

END OF SECTION

SECTION 15066

COPPER PIPING

PART 1--GENERAL

1.01 DESCRIPTION

This section specifies copper piping, tubing, couplings and fittings.

1.02 REFERENCES

This section contains references to the following documents. They are a part of this section as specified and modified. Where a referenced document contains references to other standards, those documents are included as references under this section as if referenced directly. In the event of conflict between the requirements of this section and those of the listed documents, the requirements of this section shall prevail.

Unless otherwise specified, references to documents shall mean the documents in effect at the time of Advertisement for Bids or Invitation to Bid (or on the effective date of the Agreement if there were no Bids). If referenced documents have been discontinued by the issuing organization, references to those documents shall mean the replacement documents issued or otherwise identified by that organization or, if there are no replacement documents, the last version of the document before it was discontinued. Where document dates are given in the following listing, references to those documents shall mean the specific document version associated with that date, regardless of whether the document has been superseded by a version with a later date, discontinued or replaced.

Reference	Title
ANSI B16.22	Wrought Copper and Copper Alloy Solder Joint Pressure Fittings
ANSI B16.26	Cast Copper Alloy Fittings for Flared Copper Tubes
ASTM B32	Solder Metal
ASTM B88	Seamless Copper Water Tube

PART 2--PRODUCTS

2.01 COPPER TUBING

Copper tubing shall be seamless copper, conforming to ASTM B88. Unless otherwise specified, copper tubing shall be Type L, drawn, where used in exposed service and Type K, annealed or drawn for buried service.

2.02 COUPLINGS AND FITTINGS FOR COPPER TUBING

Unless otherwise specified, couplings and fittings for copper tubing 1/2 inch and smaller nominal diameter shall be compression type, brass or bronze, capable of holding the full bursting strength of the tubing; shall meet the requirements of ANSI B16.26; and shall be Swagelok, Gyrolok, or equal.

Couplings and fittings for copper tubing larger than 1/2-inch nominal diameter shall be wrought copper or bronze, solder joint pressure fittings and shall conform to ANSI B16.22.

2.03 SOLDER

Solder to be used in copper piping shall be ASTM B32, Alloy Grade Sn95 or Silvabrite 100.

2.04 PRODUCT DATA

Contractor's layout drawings and catalog data demonstrating compliance with this specification and giving full description of the copper piping shall be provided in accordance with Section 01300.

PART 3--EXECUTION

3.01 FABRICATION

A. SOLDER JOINTS:

All pipe and fittings to be jointed with solder shall be free from all burrs and wire brushed or steel wool cleaned. After cleaning, a paste flux shall be evenly and sparingly applied to the surfaces to be joined. Solder shall then be applied and flame passed toward the center of the fitting until the solder disappears. All excess solder shall be removed while it is still plastic. Absolutely no acid flux or acid wipe shall be used in making solder joints.

B. TAKEDOWN COUPLINGS:

Takedown couplings shall be screw union type and shall be provided in accordance with paragraph 15085-3.01 C.

C. DIELECTRIC PROTECTION:

Copper tubing or fittings shall not be permitted to come in contact with steel piping, reinforcing steel, or other steel at any location. Electrical checks shall be made to assure no contact is made between copper tubing and steel elements. Wherever electrical contact is demonstrated by such tests, the Contractor shall provide dielectric protection as specified in paragraph 15085-3.01 E.

3.02 INSTALLATION, CLEANING, DISINFECTION, AND TESTING

The installation, cleaning, disinfection, and testing of copper piping shall be as specified in Section 15050.

END OF SECTION

SECTION 15067

STAINLESS STEEL PIPING

PART 1--GENERAL

1.01 DESCRIPTION

A. SCOPE:

This section specifies stainless steel pipe and fittings.

1.02 QUALITY ASSURANCE

A. REFERENCES:

This section contains references to the following documents. They are a part of this section as specified and modified. Where a referenced document contains references to other standards, those documents are included as references under this section as if referenced directly. In the event of conflict between the requirements of this section and those of the listed documents, the requirements of this section shall prevail.

Unless otherwise specified, references to documents shall mean the documents in effect at the time of Advertisement for Bids or Invitation to Bid (or on the effective date of the Agreement if there were no Bids). If referenced documents have been discontinued by the issuing organization, references to those documents shall mean the replacement documents issued or otherwise identified by that organization or, if there are no replacement documents, the last version of the document before it was discontinued. Where document dates are given in the following listing, references to those documents shall mean the specific document version associated with that date, regardless of whether the document has been superseded by a version with a later date, discontinued or replaced.

Reference	Title
ANSI B16.1	Cast Iron Pipe Flanges and Flanged Fittings Classes 25, 125, 250, and 800
ANSI B16.11.80	Forged Steel Fittings, Socket Welding and Threaded.
ANSI B31.1	Power Piping
ANSI B36.19M	Stainless Steel Pipe
ASME Section IX (1989)	Boiler and Pressure Vessel Code; Welding and Brazing Qualifications
ASTM A182/A182M	Forged or Rolled Alloy-Steel Pipe Flanges, Forged Fittings, and Valves and Parts for High-Temperature Service

Reference	Title
ASTM A193/A193M	Alloy-Steel and Stainless Steel Bolting Materials for High-Temperature Service
ASTM A194/A194M	Carbon and Alloy Steel Nuts for Bolts for High Pressure and High-Temperature Service
ASTM A240	Heat-Resisting Chromium and Chromium Nickel Stainless Steel Plate, Sheet, and Strip for Pressure Vessels
ASTM A276	Stainless and Heat-Resisting Steel Bars and Shapes
ASTM A312/A312M	Seamless and Welded Austenitic Stainless Steel Pipes
ASTM A320/A320M	Alloy Steel Bolting Materials for Low-Temperature Service
ASTM A403/A403M	Wrought Austenitic Stainless Steel Piping Fittings
ASTM A409/A409M	Welded Large Diameter Austenitic Steel Pipe for Corrosive or High Temperature Service
ASTM A480/A480M	General Requirements for Flat-Rolled Stainless and Heat-Resisting Steel Plate, Sheet and Strip
ASTM A774/A774M	As-Welded Wrought Austenitic Stainless Steel Fittings for General Corrosive Service at Low and Moderate Temperatures
ASTM A778	Welded, Unannealed Austenitic Stainless Steel Tubular Products

B. QUALIFICATIONS:

All shop fabricated stainless steel pipe and fittings shall be furnished by a single manufacturer who is experienced and qualified in the manufacture and fabrication of the items to be furnished. The pipe and fittings shall be shop-fabricated and field-installed in accordance with common industry wide practices and methods and shall comply with these specifications.

Only weld procedures which have been qualified under ASME Section IX and only welders who have successfully completed performance qualification tests per ASME Section IX on these qualified procedures shall be utilized.

C. TESTING:

Factory testing shall conform to the requirements of ASTM A312, ASTM A409 HT-0, or ASTM A778, depending on the size and type of stainless steel pipe provided.

1.03 SUBMITTALS

The following information shall be provided in accordance with Section 01300:

1. A copy of this specification section, with addendum updates included, and all referenced and applicable sections, with addendum updates included, with each paragraph check-marked to indicate specification compliance or marked to indicate requested deviations from specification requirements. A check mark shall denote full compliance with a paragraph as a whole. If deviations from the specifications are indicated, and therefore requested by the Contractor, each deviation shall be underlined and denoted by a number in the margin to the right of the identified paragraph, referenced to a detailed written explanation of the reasons for requesting the deviation. The Engineer shall be the final authority for determining acceptability of requested deviations. The remaining portions of the paragraph not underlined will signify compliance on the part of the Contractor with the specifications. *Failure to include a copy of the marked-up specification sections, along with justification(s) for any requested deviations to the specification requirements, with the submittal shall be sufficient cause for rejection of the entire submittal with no further consideration*.

2. Shop fabrication drawings showing details of materials, piping, fittings, couplings, dielectric connections, joint locations and details, types and locations of supports.

3. Other data necessary to show conformance of the complete piping system to these specifications.

PART 2--PRODUCTS

2.01 PIPE

Unless otherwise specified, stainless steel pipe 2-1/2 inches and smaller shall be Type 316L, seamless, threaded joints conforming to ASTM A312. The minimum wall thickness shall be Schedule 40S.

Unless otherwise specified, stainless steel piping 3 inches and larger shall be manufactured from ASTM A240 annealed and pickled sheets and plates, Type 316L, in accordance with ASTM A778 or ASTM A409 HT-0. Only extra-low carbon (ELC) materials with 0.030 percent maximum carbon shall be used. Air piping shall be manufactured to nominal pipe sizes as listed in ANSI B36.19 and shall have the following nominal wall thickness:

Nominal pipe size, inches	Schedule gage/plate	Wall thickness inches
3-8	Schedule 5S	
10-12	12-gage sheet	0.105

14-18	11-gage sheet	0.120
20	10-gage sheet	0.135
24-36	3/16-inch plate	0.188
42-48	1/4-inch plate	0.250

Membrane permeate piping shall have the following thickness:

- Minimum wall thickness shall be 10S (Pipes 8 inches and smaller), 0.18 inches (Pipes 12 inches through 10 inches), 0.25 inches (Pipes 22 inches through 12 inches), 0.5 inches (Pipes 24 inches through 42 inches).

2.02 FITTINGS

Unless otherwise specified, stainless steel fittings, 2-1/2-inches and smaller, shall be ASTM A403, of the same material and pressure rating as the pipe, threaded long radius with dimensions conforming to ANSI B16.11.

Unless otherwise specified, stainless steel fittings, 3-inch and larger, shall be butt-weld type manufactured in accordance with ASTM A774 of the same material and in the same thicknesses as the pipe. Long radius elbows up to 24 inches in diameter shall be smooth flow. All short radius, special radius, and reducing elbows and long radius elbows greater than 24 inches in diameter shall be of mitered construction. Reducers shall be straight tapered, cone type. Tees, crosses, laterals, and wyes shall be shop-fabricated from pipe.

2.03 JOINTS

Stainless steel pipe fabricated into spool pieces shall have shop-welded circumferential butt-weld joints or flanges. Unless otherwise specified, flanged joints shall be Van Stone joints made up of stainless steel slip-on type rolled-angle face rings and ductile iron backup flanges drilled to ANSI B16.1, Class 125 standard. The angle face ring thickness shall be equal to or greater than the wall of the pipe or fitting to which it is welded, and it shall be continuously welded on both sides to the pipe or fitting. The angle leg shall not interfere with the flange bolt holes. For submerged joints, backup flanges shall be stainless steel plate flanges. The backup flanges shall be supplied with the following nominal thicknesses.

Nominal pipe size, inches	Flange thickness, inches
3	1/2
4	9/16
6-10	5/8
12-16	3/4
18-20	7/8

Nominal pipe size, inches	Flange thickness, inches
24-30	1
36	1 1/8
42	1 1/4
48-54	1 3/8

2.04 COUPLINGS

A. GENERAL:

Fabricated stainless steel piping shall be shop-prepared for pipe couplings where specified. Unless otherwise specified, couplings shall be arched-band or grooved type.

B. SLEEVE TYPE:

Sleeve type couplings, where specified, shall be of standard steel construction as specified in paragraph 15085-2.02 A. Pipe shall be plain-end with external weld beads ground smooth to ensure proper gasket seating. For pressure pipe lines, sleeve coupling joints shall be restrained by the use of harness rods connecting across the joint to flange lugs on adjacent flange joints. Where no adjacent flange joints exist, stainless steel harness lugs shall be welded to the pipe to receive the harness rods.

C. ARCHED-BAND TYPE:

Arched-band type couplings shall be stainless steel of the same material and wall thickness as the pipe and shall be Depend-O-Lok type as manufactured by Brico or equal. Couplings shall be Fixed--FxF, Expansion--ExE, or Fixed by Expansion--FxE as specified or as required. The pipe shall be plain-end with external weld beads ground smooth and with S.S. restraining rings shop-welded to the piping for fixed type couplings.

D. GROOVED-END TYPE:

Grooved-end or split type couplings shall be malleable iron or ductile iron as specified in paragraph 15085-2.02 C except that submerged couplings shall be the same material as the pipe. The pipe ends shall be roll-grooved to the coupling manufacturer's specifications. Where roll grooving is impractical, the pipe shall have heavy-wall machine-grooved pipe nipples or machined ring collars fully welded to the pipe or fitting. Nipples shall be taper-bored to the I.D. of the adjoining pipe to allow full-weld penetration. Collars shall be welded on both sides to the piping. Nipples and collars shall be of the same alloy as the piping.

E. EXPANSION TYPE:

Unless otherwise specified, expansion couplings shall be the flanged rubber arch type as specified in Section 15090. Pipe flanges shall be provided for these couplings.

2.05 THREADED CONNECTIONS

Threaded pipe, gage, or instrument connections shall be made using stainless steel, 150-pound, threaded half-couplings conforming to ASTM A182 or ASTM A276, shop welded to the pipe at the locations specified.

2.06 GASKETS

Unless otherwise specified, gaskets shall be as specified in the PIPESPECS and in paragraph 15085-2.03. For air lines, gaskets shall be neoprene or EPDM suitable for use at temperatures to 240 degrees F.

2.07 BOLTS

Bolts, nuts, and washers for stainless steel flange assemblies and stainless steel couplings shall be the same material, conforming to ASTM A320 for low-temperature service and ASTM A193 and ASTM A194 for high-temperature service. Bolts, nuts and washers for other couplings shall be as specified in referenced paragraphs for the couplings.

2.08 PIPE SUPPORT SYSTEMS

Unless otherwise specified, all hangers, rods, structural attachments, and other components of support systems for stainless steel pipe shall be of the same materials as the pipe and conform to Section 15096.

2.09 FINISH

After all shop operations have been completed, pipe and fittings shall be pickled and passivated in manufacturer's plant, and scrubbed and washed until discoloration and possible iron picked up from manufacturing process are removed. The standard finish for 16-gage through 8-gage material shall be No. 1 or 2B per ASTM A480; 3/16-inch and heavier plate material shall be No. 1 mill finish or better per ASTM A480.

2.10 PRODUCT DATA

The following information and data shall be provided in accordance with Section 01300:

1. Certifications specified in the following documents:

   ASTM A403, paragraph 14.1
   ASTM A774, paragraph 14.1
   ASTM A778, paragraph 14.1
   ASTM A409, paragraph 17.1

2. Test results specified in paragraph 15067-1.02 C.

3. Names and qualification records of proposed welders.

PART 3--EXECUTION

3.01 PIPE CUTTING, THREADING, AND JOINTING

Pipe cutting, threading, and jointing shall conform to the requirements of ANSI B31.1. All pipe threads shall be lubricated with Teflon tape.

No carbon steel brushes, grinders, saws, etc. shall be used on stainless steel piping. If any carbon steel tools are inadvertently used on the stainless steel pipe or fittings, the contractor shall wash the affected area with an appropriate acid wash/pickling solution on both the inside and outside of the pipe.

3.02 WELDING

A. GENERAL:

Piping with wall thickness up to 11 gage (0.120 inch) shall be welded with the TIG (GTAW) process. Unless otherwise specified, heavier walls shall be properly beveled and have a root pass with the TIG (GTAW) process followed by subsequent passes with the TIG (GTAW), MIG (GMAW), or Metallic Arc (SMAW) process. Filler wire of ELC grades only shall be added to all welds to provide a cross section at the weld equal to or greater than the parent metal. Weld deposit shall be smooth and evenly distributed and have a crown of no more than 1/16 inch on the I.D. and 3/32 inch on the O.D. of the piping. Concavity, undercut, cracks, or crevices shall not be allowed. Butt welds shall have full penetration to the interior surface, and inert gas shielding shall be provided to the interior and exterior of the joint. Excessive weld deposits, slag, spatter, and projections shall be removed by grinding. Welds on gasket surfaces shall be ground smooth.

B. FIELD WELDING:

Field welding shall be minimized to the greatest extent possible by use of couplings and prefabrication of pipe systems at the factory. Pipe butt welds may be performed at the job site, providing the but welds are performed only with an inert gas shielded process and that other applicable specified welding requirements are rigidly adhered to.

All residue, oxide, and heat stain is to be removed from any type of field weld and the affected areas adjacent by the use of stainless steel wire brushes, followed by cleaning with an agent such as Eutectic Company's "Eucleen," or equal, followed by complete removal of the agent.

Any joints that are field welded shall have both the inside and outside of the pipe washed with an appropriate acid wash/pickling solution

C. PREPARATION OF SURFACES TO BE WELDED:

Surfaces of joints to be welded shall be free from mill scale, slag, grease, oil, paint, rust, and other foreign material. Joints to be welded shall be wire-brushed with stainless steel wire brushes and precisely fitted before welding.

D. WEATHER CONDITIONS:

Welding shall be done only when the surfaces are completely free of any moisture. Welding of the pipe shall not be done during periods of high winds or rain unless the areas being welded are properly shielded.

E. TACK WELDS, CLIPS, AND OTHER ATTACHMENTS:

Nicks, gouges, notches, and depressions in the base metal in the area of the joint shall be repaired before the joint weld is made. Tack welds, clips, and other attachments shall be removed and defects repaired, except where the tack welds occur within the weld area and these tack welds do not exceed the size of the completed weld. Cracked tack welds shall be removed. Areas to be repaired shall be ground to clean metal and then repaired by building up with weld metal. The repaired areas shall be ground smooth to form a plane surface with the base metal.

F. DEFECTS AND REPAIRS:

Welds with cracks, slag inclusions, porosity, undercutting, incomplete penetration, or which are otherwise deficient in quality or made contrary to any provisions of these specifications shall be removed by chipping or grinding throughout their depth to clean base metal. Calking or peening of welds to correct defects shall not be done. Welds found deficient in dimension but not in quality shall be enlarged by additional welding after thoroughly cleaning the surface of previously deposited metal and the adjoining plate. Weld deposits, slag, weld spatter, and projections into the interior of the pipe shall be removed by grinding.

3.03 MARKING, SHIPPING, AND STORAGE

All pipe, fittings, and fabrications shall be properly marked with type, gage, and heat number. All fabricated piping shall have openings plugged and flanges secured for storage and/or transport after fabrication. All fabricated piping shall be piece-marked with identifying numbers or codes which correspond to the Contractor's layout and installation drawings. The marks will be located on the spools at opposite ends and 180 degrees apart. Pipe spools shall be loaded and blocked and lagged as necessary to ensure protection from damage during shipping. Stainless steel pipe and fittings shall be stored per manufacturer's recommendation. Dents, gouges, and scratches in stainless steel pipe and fittings are not acceptable and are reason for rejecting pipe and fittings.

3.04 FABRICATION/INSTALLATION REQUIREMENTS

The piping supplier during manufacturing, fabricating and handling stages, and the Contractor during handling and installation stages, shall use extreme care to avoid the contact of any ferrous materials with the stainless steel piping. All saws, drills, files, wire brushes, etc. shall be used for stainless steel piping only. Pipe storage and fabrication racks shall be nonferrous or stainless steel or rubber-lined. Nylon slings or straps shall be used for handling stainless steel piping. Contact with ferrous items may cause rusting of iron particles embedded in the piping walls. After installation, the Contractor shall wash and rinse all foreign matter from the piping surface. All welded joints shall be treated with a pickling solution, brushed with stainless steel wire brushes and rinsed clean. If rusting of embedded iron occurs, the Contractor shall pickle the

affected surface with Oakite Deoxidizer SS, or equal, scrub with stainless steel brushes, and rinse clean.

3.05 COATINGS

After installation, the Contractor shall paint all steel or iron flanges, couplings, and appurtenances in accordance with Section 09900. Painting of the stainless steel pipe is not required. However, the Contractor shall be responsible for supplying and installing the stainless steel piping with a consistently clean surface. Identifying spool piece marks shall be removed with paint thinner or solvents and the entire stainless steel surface shall be washed with detergent and hot water and rinsed clean.

END OF SECTION

SECTION 15075

JOINT GASKETS

PART 1--GENERAL

1.01 DESCRIPTION

This section specifies rubber gaskets for push-on compression type joints used with fabricated steel pipe, steel pipe, reinforced concrete pipe, concrete cylinder pipe, and cement mortar lined and coated steel pipe.

1.02 QUALITY ASSURANCE

A. REFERENCES:

This section contains references to the following documents. They are a part of this section as specified and modified. Where a referenced document contains references to other standards, those documents are included as references under this section as if referenced directly. In the event of conflict between the requirements of this section and those of the listed documents, the requirements of this section shall prevail.

Unless otherwise specified, references to documents shall mean the documents in effect at the time of Advertisement for Bids or Invitation to Bid (or on the effective date of the Agreement if there were no Bids). If referenced documents have been discontinued by the issuing organization, references to those documents shall mean the replacement documents issued or otherwise identified by that organization or, if there are no replacement documents, the last version of the document before it was discontinued. Where document dates are given in the following listing, references to those documents shall mean the specific document version associated with that date, regardless of whether the document has been superseded by a version with a later date, discontinued or replaced.

Reference	Title
ASTM D395	Rubber Property--Compression Set, Test for
ASTM D412	Rubber Properties in Tension, Test for
ASTM D471	Rubber Property--Effect of Liquids, Test for
ASTM D573	Rubber--Deterioration in an Air Oven, Test for
ASTM D1149	Rubber Deterioration--Surface Ozone Cracking in a Chamber (Flat Specimens), Test for
ASTM D2240	Rubber Property--Durometer Hardness, Test for

B. TESTING:

Certified copies of test reports indicating that the gasket material has been tested and that the results of the tests comply with the requirements specified in paragraph 15075-2.02 shall be provided as product data.

PART 2--PRODUCTS

2.01 MATERIALS

Gasket stock shall be a synthetic rubber compound in which the elastomer is neoprene. The compound shall contain no less than 50 percent by volume neoprene and shall be free from factice, reclaimed rubber and other deleterious substances.

2.02 PHYSICAL REQUIREMENTS

The compound shall meet the following physical requirements when tested in accordance with the specified ASTM standards.

A. TENSILE (ASTM D412):

The tensile strength shall be 1500 psi minimum and the ultimate elongation shall be 350 percent minimum.

B. HARDNESS (ASTM D2240, TYPE A DUROMETER):

The compound shall have a hardness in the range of 35 to 50 for concrete spigots and 50 to 65 for steel spigots.

C. COMPRESSION SET (ASTM D395):

The compression set shall not exceed 20 percent when compressed for 22 hours at 70 degrees C.

The test specimens shall be circular discs cut from the gaskets. Test specimens shall be 0.500 (± 0.005 - 0.025) inches in height. The diameter of the test specimen shall be that of the gasket but not to exceed 1.129 ± 0.010 inches in diameter.

D. AGING (ASTM D573):

The test specimen deterioration shall be less than 20 percent reduction in tensile strength, 40 percent reduction in ultimate elongation, and 15 points increase in hardness.

E. EFFECT OF LIQUIDS (ASTM D471):

The maximum volume change in oil and in water shall be as follows:

1. Oil: 100 percent in ASTM oil No. 3.

2. Water: 15 percent.

The test specimens shall have a thickness of 0.080 ±0.005 inches and shall be circular discs cut from the gasket.

F. OZONE CRACKING (ASTM D1149):

The test specimen shall be a gasket loop mounted to give at least 20 percent elongation. There shall be no cracking visible at two times magnification of the gasket after 100 hours exposure to 1 mg/l ozone at 40 degrees C.

2.03 PRODUCT DATA

In accordance with Section 01300, the Contractor shall provide certified copies of test reports specified in paragraph 15075-1.02 B.

PART 3--EXECUTION

The gaskets shall be installed in accordance with the manufacturer's recommendations.

END OF SECTION

SECTION 15085

PIPING CONNECTIONS

PART 1--GENERAL

1.01 DESCRIPTION

This section specifies the following methods of connecting metallic piping: flanges, threading, mechanical couplings, equipment connection fittings, dielectric unions, and welding.

1.02 REFERENCES

This section contains references to the following documents. They are a part of this section as specified and modified. Where a referenced document contains references to other standards, those documents are included as references under this section as if referenced directly. In the event of conflict between the requirements of this section and those of the listed documents, the requirements of this section shall prevail.

Unless otherwise specified, references to documents shall mean the documents in effect at the time of Advertisement for Bids or Invitation to Bid (or on the effective date of the Agreement if there were no Bids). If referenced documents have been discontinued by the issuing organization, references to those documents shall mean the replacement documents issued or otherwise identified by that organization or, if there are no replacement documents, the last version of the document before it was discontinued. Where document dates are given in the following listing, references to those documents shall mean the specific document version associated with that date, regardless of whether the document has been superseded by a version with a later date, discontinued or replaced.

Reference	Title
ANSI Bl.1	Unified Inch Screw Threads (UN and UNR Thread Form)
ANSI Bl.20.1	Pipe Threads, General Purpose (Inch)
ANSI B16.1	Cast Iron Pipe Flanges and Flanged Fittings
ANSI B16.5	Pipe Flanges and Flanged Fittings
ANSI B18.2.1	Square and Hex Bolts and Screws Inch Series
ANSI B18.2.2	Square and Hex Nuts (Inch Series)
ANSI B31.1	Power Piping
ANSI B31.3	Chemical Plant and Petroleum Refinery Piping
ASME Section IX	Boiler and Pressure Vessel Code; Welding and Brazing Procedures, Welders, Brazers, and Welding and Brazing Operators Qualifications

Reference	Title
ASTM B98	Copper-Silicon Alloy Rod, Bar and Shapes
ASTM F37	Standard Test Methods for Sealability of Gasket Materials
ASTM F104	Standard Classification System for Nonmetallic Gasket Materials
ASTM F152	Standard Test Methods for Tension Testing of Nonmetallic Gasket Materials
ASTM F593	Stainless Steel Bolts, Hex Cap Screws, and Studs
AWWA C111	Rubber-Gasket Joints for Ductile-Iron Pressure Pipe and Fittings
AWWA C206	Field Welding of Steel Water Pipe
AWWA C207	Steel Pipe Flanges for Waterworks Service-Size 4 in. through 144 in.
AWWA C219	Bolted, Sleeve-Type Couplings for Plain-End Pipe
AWWA C550	Protective Epoxy Coatings for Valves and Hydrants
AWWA C606	Grooved and Shouldered Joints
AWWA M11	Steel Pipe-A Guide for Design and Installation
NSF 61	Drinking Water System Components - Health Effects

1.03 SUBMITTALS

In addition to the material listed in the detailed specification, the following submittals shall be provided in accordance with Section 01300:

1. For Equipment Connection Fittings used in pumping applications submit thrust rod stretch calculations in accordance with paragraph 2.01D. and dimensional layout data.

PART 2--PRODUCTS

2.01 FLANGE ASSEMBLIES

A. FLANGES:

1. GENERAL: Flanges shall either be flat flanges or convoluted ring flanges as specified in the following paragraphs.

2. FLAT FLANGES: Cast iron flanges shall be faced in accordance with ANSI B16.1. Where companion flanges are used, the flanges on pipe shall be refaced to be flush with the companion flange face. Class 150 and Class 300 forged steel flanges shall be raised face conforming to ANSI B16.5. Lightweight slip-on flanges shall be plain face conforming to AWWA C207, Class B and ANSI B16.5. Unless otherwise specified, steel flanges shall be ANSI B16.5,

Class 150 or AWWA C207, Class D. Class E AWWA flanges shall be provided where test pressure exceeds 175 psi. Plain faced flanges shall not be bolted to raised face flanges.

3. CONVOLUTED RING FLANGES: Convoluted ring flanges shall be ductile iron, forged steel or cast stainless steel, designed to bear on hubs welded to the pipe and shall be as manufactured by Improved Piping Products. The Engineer knows of no equal. The flange joints shall be rated for not less than 150 percent of the test pressures listed in Section 15050 and shall conform to the requirements of ANSI B 16.5 and AWWA C207. The flange manufacturer shall be prepared to demonstrate, by certified pressure test that the flanges will meet these requirements.

B. GASKETS:

Gasket material shall be as specified in paragraph 15085-2.03.

Gaskets for plain faced flanges shall be the full face type. Thickness shall be 1/16 inch for pipe 10 inches and less in diameter and 1/8 inch for pipe 12 inches and larger in diameter. Unless otherwise specified, gaskets for raised face flanges shall match the raised face and shall be 1/16 inch thick for pipe 3-1/2 inches and less in diameter and 1/8 inch thick for pipe 4 inches and larger.

C. BOLTS:

Flange assembly bolts shall be ANSI B18.2.1 standard square or hexagon head bolts with ANSI B18.2.2 standard hexagon nuts. Threads shall be ANSI Bl.1, standard coarse thread series; bolts shall be Class 2A, nuts shall be Class 2B. Bolt length shall conform to ANSI B16.5.

Unless otherwise specified, bolts shall be carbon steel machined bolts with hot pressed hexagon nuts. Bolts for submerged service shall be made of Type 316 stainless steel in conformance with ASTM F593, marking F593F. Nuts for submerged service shall be made of copper-silicon alloy bronze conforming to ASTM B98, alloy C65100, designation H04 or alloy C65500, designation H04. Bolts and nuts for buried service shall be made of noncorrosive high-strength, low-alloy steel having the characteristics specified in ANSI/AWWA C111/A21, regardless of any other protective coating. Where washers are required, they shall be of the same material as the associated bolts.

2.02 MECHANICAL COUPLINGS

A. SLEEVE-TYPE COUPLINGS:

Unless otherwise specified, sleeve-type mechanical pipe couplings shall be Smith-Blair Type 411, Dresser Style 38, or equal, with the stop removed from the middle ring. Reducing couplings shall be Smith-Blair Type 415, Dresser Style 62, or equal. Sleeve-type flanged coupling adapters shall be Smith-Blair Type 913, Dresser Style 128, or equal. Insulating couplings shall be Smith-Blair Type 416, Dresser Style 39, or equal.

Bolts for submerged service shall be made of Type 316 stainless steel in conformance with ASTM F593, markingF593F. Nuts for submerged service shall be made of copper-silicon alloy

bronze conforming to ASTM B98, alloy C65100, designation H04, or alloy C65500, designation H04. Bolts and nuts for buried service shall be made of noncorrosive high-strength, low-alloy steel having the characteristics specified in ANSI/AWWA C111/A21, regardless of any other protective coating. Where washers are required, they shall be of the same material as the associated bolts.

Gaskets shall be as specified in paragraph 15085-2.03 and AWWA C111.

B. PLAIN END COUPLINGS:

Plain end pipe couplings for pipe sizes 6 inches and smaller shall be Gustin-Bacon 200, Victaulic Style 99, or equal for Schedule 80 pipe and Gustin-Bacon 205, Victaulic Style 90, or equal for lighter weight pipe. Plain end couplings for pipe sizes 8 inches and larger shall be Gustin-Bacon 200, Victaulic Style 99, or equal. Unless otherwise specified, bolts and nuts shall comply with AWWA C606.

Gaskets shall be as specified in paragraph 15085-2.03 and AWWA C606.

C. GROOVED END COUPLINGS:

Grooved end flexible-type couplings shall be Gustin-Bacon 100, Victaulic Style 77, or equal. Grooved end rigid-type couplings shall be Gustin-Bacon 120 Rigi-Grip, Victaulic Style 07 Zero-Flex, or equal. Flexible-type couplings shall be used for all piping greater than 12 inches in diameter; for pipe 12 inches in diameter and less in rack-mounted tunnel piping applications; and for grooved joints adjacent to pump or blower suction and discharge where grooved couplings are used for noise and vibration control. All other applications for piping 12 inches in diameter and less shall utilize rigid-type couplings. Grooved end flanged coupling adapters shall be either Gustin-Bacon 154, Victaulic Style 741, or equal. Snap-joint grooved end couplings shall be Gustin-Bacon 115, Victaulic Style 78, or equal. Cut grooves are not permitted on fabricated or lightwall pipe.

Unless otherwise specified, bolts and nuts shall comply with AWWA C606. Bolts for submerged service shall be Type 316 stainless steel in conformance with ASTM F593, marking F593F. Nuts for submerged service shall be made of copper-silicon alloy bronze conforming to ASTM B98, alloy C65100, designation H04 or alloy C65500, designation H04. Bolts and nuts for buried service shall be made of noncorrosive high-strength, low-alloy steel having the characteristics specified in ANSI/AWWA C111/A21, regardless of any other protective coating. Where washers are required, they shall be of the same material as the associated bolts.

Gaskets shall be as specified in paragraph 15085-2.03 and AWWA C 606.

D. EQUIPMENT CONNECTION FITTINGS:

Equipment connection fittings shall provide both lateral and angular misalignment adjustment between equipment connection flanges and the connection to field piping systems by providing individually adjustable flexible joints at each connection. In addition, equipment connection fittings shall provide full pressure thrust restraint between the field piping connection and equipment connection flanges.

Equipment connection fittings shall consist of two flanged coupling adapters, a plain end section of pipe and thrust restraint rods and associated fittings designed to transmit thrust without transmitting shear to the thrust restraint rods and without compromising provisions for accommodating angular and parallel misalignment. Materials and features shall conform to the requirements established in this paragraph. Standard “dismantling joints” incorporate only one flanged coupling adapter and are not acceptable substitutes. Equipment connection fittings shall be Romac ECF Series, or Baker Coupling Company, Los Angeles or equal, modified as specified to provide the required features.

Equipment connection fittings shall each consist of a single sleeve of plain end piping conforming to the requirements of the specified piping system of sufficient length to span the gap between the connection at the equipment and the connection at the field piping with gasketed flange adapters at each end. Thrust restraint shall be provided by means of all threaded rod spanning between flanges and male rod nuts and female washers that are rounded to provide a ball-joint type self aligning feature. All threaded restraint rod shall project through flange and mating flange coupling adapter bolt holes or through holes in restraint lug plates that extend above the flanges and are secured to the flanges with a minimum of two flange bolts. Where the all threaded rods project through flange bolt holes, ball joint type nut and washer combinations and lock washers shall be provided at each face, each end. Where restraint lug plates are employed, ball joint type nuts and washers shall be provided only on the outside faces of the plates and the nuts shall have a self locking feature that prevents nut movement due to vibration or other operational or environmental causes. Double nutting with non-locking nuts shall not be an acceptable method of providing the self locking feature. Thrust rod diameter and material shall be selected to provide sufficient freedom of movement through all bolt holes to allow unrestricted maximum adjustment of equipment connection fittings to accommodate piping misalignment without transmitting any shear to the thrust rods and also to permit full development of thrust restraint at all thrust rod tension take-ups. Design of equipment connection fittings shall conform to AWWA C219.

Thrust rods, restraint lug plates, nuts, washers and lock washers shall be Type 316 stainless steel, all selected to develop full rated piping system pressure thrust forces. Equipment connection fittings for pump applications shall have thrust rod number and diameter selected such that thrust rod stretch under piping system operating pressure does not exceed 2 mils. Calculations shall be submitted. Dry film molybdenum di-sulfide anti-galling compound shall be factory applied to ends of thrust rods, covering all threads subject to nut travel and tightening. Gaskets shall be as specified in paragraph 15085-2.03. Flange gaskets shall be full face type. Follower gaskets shall be compression wedge type.

Sleeves shall be carbon steel or as specified for the specific piping system. Pressure rating of flange adapters shall equal or exceed the pressure rating of mating flanges. All metal portions of equipment connection fittings, with the exception of 316 stainless steel components, shall be coated and lined with fusion bonded epoxy conforming to AWWA C550 and NSF 61.

E. DISMANTLING JOINTS:

Dismantling joints may be used as takedown couplings in accordance with paragraph 15085-3.03. Dismantling joints shall fully restrained double flange fittings consisting of a flange

coupling adapter and flanged spool piece that allows for longitudinal adjustment. Thrust restraint shall be provided by means of all threaded rod spanning between flanges and secured to the flanges with a minimum of two flange bolts. Design of equipment connection fittings shall conform to AWWA C219. Sleeves shall be carbon steel or as specified for the specific piping system. Pressure rating of flange adapters shall equal or exceed the pressure rating of mating flanges. All metal portions of equipment connection fittings, with the exception of 316 stainless steel components, shall be coated and lined with fusion bonded epoxy conforming to AWWA C550 and NSF 61. Dismantling joints shall be Romac DJ-400, Smith Blair 975, or Crane-Viking Johnson Dismantling Joint.

F. SLEEVE BAND COUPLINGS:

Sleeve band couplings shall be Victaulic Depend-O-Lock. Unless otherwise noted, couplings for liquid service shall be Model F x F Type 2 fully restrained, shouldered high deflection couplings with standard width band. Couplings shall comply with AWWA C-219. Couplings for use with air systems shall be Airmaster restrained Depend-O-Lock couplings in conformance with AWWA C-606. Sleeve band couplings are acceptable wherever sleeve type couplings are used (paragraph 15085-2.02 A.)

G. FLEXIJOINT:

Where specified Flexijoint couplings shall be Flanged Romac Flexijoint couplings. The Flexijoint is a flexible, ductile iron joint that can accommodate expansion, contraction, rotation and bending and is rated at 350 psi working pressure. The joint can accommodate 15 to 20 degree deflection depending on size. Body shall be ductile iron, lock rings Type 410 stainless steel, and ring gasket, casing, ball and cover shall be EPDM molded watertight construction. All metal portions of Flexijoint coupling including the stainless steel lock rings shall be coated and lined with fusion bonded epoxy conforming to AWWA C550 and NSF 61. For buried installations, install with polyethylene baggy cover in accordance with the manufacturer's instructions.

2.03 GASKETS

Gaskets designated in Section 15050 shall be as follows:

1. EPDM: ethylene-propylene-diene-terpolymer.
2. Neoprene: neoprene.
3. Nitrile: nitrile (Buna N).
4. Compressed gasketing consisting of organic fibers (Kevlar) and neoprene binder; ASTM F104 (F712400), 2500 psi (ASTM F152), 0.2 ML/HR LEAKAGE FUEL A (ASTM F37).

5. Compressed gasketing consisting of organic fibers (Kevlar) and SBR binder; ASTM F104 (F712400), 2500 PSI (ASTM F152), 0.1 ml/hr leakage Fuel A (ASTM F37).
6. Gylon gasketing, Garlock Style 3500, 2000 psi (ASTM F152), 0.22 ml/hr Fuel A (ASTM F37).

7. Gylon gasketing, Garlock Style 3510, 2000 psi (ASTM F152), 0.04 ml/hr Fuel A (ASTM F37).
8. Gylon gasketing, Garlock Style 3504, 2000 psi (ASTM F152), 0.12 ml/hr Fuel A (ASTM F37).
9. TFE: noncreeping tetrafluoroethylene (TFE) with insert filler.
10. PTFE bonded EPDM: PTFE bonded to EPDM in full-face gasket having concentric-convex molded rings; Garlock Stress Saver 370 or equal.

2.04 THREAD

Pipe thread dimensions and size limits shall conform to ANSI Bl.20.1.

2.05 DIELECTRIC UNIONS

Dielectric unions shall be EPCO, Capitol Manufacturing, or equal.

2.06 COATINGS

Unless otherwise specified, flange assemblies and mechanical type couplings for buried installation shall be field coated with System M-1 as specified in Section 09900.

2.07 PRODUCT DATA

In accordance with Section 01300, the Contractor shall provide for each welder, a welder qualification certificate indicating the welder is certified for pipe welding in accordance with ASME Boiler and Pressure Vessel, Section IX. Each welder's certificate shall be provided to the Engineer prior to that welder working on the job.

PART 3--EXECUTION

3.01 PIPE CUTTING, THREADING AND JOINTING

Pipe cutting, threading and jointing shall conform to the requirements of ANSI B31.1.

3.02 PIPE WELDING

Pipe shall be welded by ASME-certified welders using shielded metal arc, gas shielded arc or submerged arc welding methods. Welds shall be made in accordance with the requirements of ANSI B31.1 for piping Systems 8, 26, and 28 specified in Section 15050. Welds shall be made in accordance with the requirements of ANSI B31.3 for piping System 20 specified in Section 15050.

Welds for piping systems not specified above shall be made in accordance with AWWA C206.

3.03 TAKEDOWN COUPLINGS

Takedown couplings shall be screw unions, flanged or grooved end mechanical coupling type joints and shall be provided as specified. Flanged or grooved end joints shall be employed on pipelines 2-1/2 inches in diameter and larger. Where piping passes through walls, takedown couplings shall be provided within 3 feet of the wall, unless specified otherwise.

A union or flanged connection shall be provided within 2 feet of each threaded end valve.

3.04 FLEXIBILITY

Unless otherwise specified, piping passing from concrete to earth shall be provided with two pipe couplings or flexible joints (or a single Flexijoint) as specified on the buried pipe within 2 feet of the structure for 2-inch through 6-inch diameter pipe; within 3 feet of the structure for 8-inch through 24-inch diameter pipe; and within one and one-half pipe diameters of the structure for larger pipe. Where required for resistance to pressure, mechanical couplings shall be restrained in accordance with Chapter 13 of AWWA M11, including Tables 13-4, 13-5 and 13-5A, and Figure 13-20.

3.05 DIELECTRIC CONNECTIONS

Where a copper pipe is connected to steel or cast iron pipe, an insulating section of rubber or plastic pipe shall be provided. The insulating section shall have a minimum length of 12 pipe diameters. Dielectric unions as specified in paragraph 15085-2.05 may be used instead of the specified insulating sections. Where copper pipe is supported from hangers, it shall be insulated from the hangers, or copper-plated hangers shall be used.

3.06 EQUIPMENT CONNECTION FITTINGS

Where shown, equipment connection fittings shall be provided between field piping systems and equipment inlet and outlet connections.

END OF SECTION

SECTION 15090

EXPANSION JOINTS AND FLEXIBLE METAL HOSE

PART 1--GENERAL

1.01 DESCRIPTION

This section specifies piping expansion joints and flexible metal hose.

1.02 QUALITY ASSURANCE

A. REFERENCES:

This section contains references to the following documents. They are a part of this section as specified and modified. Where a referenced document contains references to other standards, those documents are included as references under this section as if referenced directly. In the event of conflict between the requirements of this section and those of the listed documents, the requirements of this section shall prevail.

Unless otherwise specified, references to documents shall mean the documents in effect at the time of Advertisement for Bids or Invitation to Bid (or on the effective date of the Agreement if there were no Bids). If referenced documents have been discontinued by the issuing organization, references to those documents shall mean the replacement documents issued or otherwise identified by that organization or, if there are no replacement documents, the last version of the document before it was discontinued. Where document dates are given in the following listing, references to those documents shall mean the specific document version associated with that date, regardless of whether the document has been superseded by a version with a later date, discontinued or replaced.

Reference	Title
ASTM A276-90	Stainless and Heat-Resisting Steel Bars and Shapes
EJMA STDS-80	Standards of Expansion Joint Manufacturers' Association, Edition No. 5

B. PERFORMANCE AND SERVICE CONDITIONS:

Expansion joints shall be designed in accordance with EJMA Standards for pressure, temperature and service as specified.

Flexible metal hose shall be suitable for a line pressure equal to the test pressure listed in the PIPESPEC.

C. DESIGN REQUIREMENTS:

1. GENERAL: The Contractor shall cause the design of pipe hanger and support systems to be developed in conjunction with preparation of the design seismic restraints

and expansion control system by the design professional selected in accordance with Paragraph 15050-1.02 C. The pipe system drawings specified in paragraph 15050-2.04 shall show the hanger and support locations as well as the details of the seismic restraints and expansion control systems. The pipe hanger and support design drawings and calculations shall be prepared and signed by the design professional and shall bear the design professional's registration seal. Where the Drawings indicate the provision of expansion joints, Contractor's design professional shall confirm the location and selection of these joints.

2. FLEXIBLE METAL HOSE: Live lengths for flexible metal hose shall be based upon the service conditions listed under paragraph 15090-1.02 B and a design life of 1,000,000 full displacement cycles.

3. EXPANSION JOINTS: Corrugated type expansion joints shall be suitable for a minimum of 10,000 pressure, temperature and deflection cycles (non-concurrent).

PART 2--PRODUCTS

2.01 EXPANSION JOINTS

A. METAL CONSTRUCTION:

1. FORMED BELLOWS TYPE:

a. MEDIUM TEMPERATURE: Formed bellows type expansion joints for temperatures up to 800 degrees F shall have 300 series stainless steel multi-ply bellows rated for the specified design temperature and pressure. Test pressures are specified in Section 15050. Each expansion joint shall be factory tested at the test pressure. Ductwork expansion joints may be rated at less than 50 psig but must be rated equal to the design pressure and, in no case, less than 2 psig. Engine and gas turbine exhaust expansion joints shall be as specified in paragraph 15090-2.01 A.1.b.

Expansion joint design shall be determined by the amount and kind of movement specified (axial, lateral, angular). Unless otherwise specified, end connections shall be flanged. Formed bellows type expansion joints shall be as manufactured by Flexonics, Inc., Hyspan Precision Products, Inc., American BOA Inc. or equal.

b. HIGH TEMPERATURE: Engine and gas turbine exhaust expansion joints for temperatures up to 1300 degrees F shall be the multi-ply bellows type designed for 15 psig. Bellows shall be constructed of 300 series stainless steel. Unless otherwise specified, end connections shall be either the fixed flange or Vanstone flange configuration. Flange material shall be carbon steel for temperatures up to 1000 degrees F and stainless steel for temperatures 1000-1300 degrees F. Vanstone materials and flow liners, where specified, shall be the same as bellows material. Exhaust expansion joints shall be Flexonics DEX Series, Hyspan Series 2500, American BOA Series 025E, or equal.

2. STEEL EXPANSION COMPENSATOR TYPE: Steel expansion compensator type expansion joints shall be Flexonics Model H Expansion Compensator, Hyspan Series 8500, Keflex 7Q, or equal. Compensators shall have 2-ply stainless steel bellows and

carbon steel shroud and end fittings. Compensators shall be rated for 175 psi maximum working pressure and 750 degrees F.

3. BRONZE EXPANSION COMPENSATOR TYPE: Bronze expansion compensator type expansion joints shall be Flexonics Model HB Expansion Compensator, Hyspan Series 8500, Keflex 7Q, American BOA Inc., or equal. Compensators shall have multi-ply phosphor bronze or stainless steel bellows and copper tube end fittings. Compensators shall be rated for 150 psi maximum working pressure and 400 degrees F.

B. ELASTOMER AND FABRIC CONSTRUCTION:

NOT ALLOWED FOR THIS PROJECT.

C. POLYVINYLCHLORIDE CONSTRUCTION:

Polyvinylchloride expansion joints shall be Celanese "Chemtrol" CPVC slip type with Teflon impregnated seal rings, Certain-teed Fluid Tite PVC, Johns-Manville PVC double bell expansion joint, or equal.

D. TEFLON CONSTRUCTION:

Teflon expansion joints shall be molded TFE bellows and shall be Metraflex T-2, Garlock Style 215, Resistoflex R-6905, EGC Style M-150, or equal.

2.02 FLEXIBLE METAL HOSE

A. GENERAL:

Flexible metal hose shall be corrugated type 321 stainless steel with stainless steel fittings and shall be provided with stainless steel single braid, unless otherwise specified. End connections shall be attached by the heliarc welding process using stainless steel welding rod. Bronze flexible metal hose shall be provided for copper and brass systems.

B. BRAIDED TYPE:

1. TYPE A: Type A braided flexible metal hose shall be Flexonics Series 401M/402M, Flexweld USFWSS-31/32, American BOA Series B, or equal.

2. TYPE B: Type B braided flexible metal hose shall be Flexonics Series 301, Flexweld USFWB-31, American BOA Series B, or equal.

2.03 PRODUCT DATA

The following information shall be provided to the Construction Manager in accordance with Section 01300:

1. Design and construction details of formed metal bellows type expansion joints.

2. Pressure thrust force and spring rate data for formed metal bellows expansion joints.

3. Details for installation of all expansion joints.

PART 3--EXECUTION

3.01 INSTALLATION

Expansion joints and anchors shall be located as specified. Location and number of guides shall be determined from EJMA Standards.

Expansion joints shall not be installed during times of temperature extreme or in a fully compressed or fully expanded condition.

3.02 ALIGNMENT

Piping systems shall be aligned prior to installation of expansion joints. Expansion joints shall not be used to correct piping misalignment during installations. Expansion joints normally preset at the factory for rated axial compression and expansion shall be installed in this preset condition.

3.03 EXPANSION JOINT AND CONNECTOR SCHEDULE

The location of piping system expansion joints and design criteria, including temperature, pressure and movement for each joint, shall be as specified on the drawings. Expansion joints shown on the Drawings should not be considered an exhaustive listing. Contractor shall confirm the suitability

END OF SECTION

SECTION 15095

PIPING APPURTENANCES

PART 1--GENERAL

1.01 DESCRIPTION

A. SCOPE:

This section specifies pipeline thermometers, flow and level gages, pressure gages, strainers, steam traps, vents and drains.

B. EXCLUSIONS:

Temperature, pressure and flow measuring devices used for instrumentation are specified in Division 17. Instruments specified in Section 17211 are identified in the instrument index in Section 17200.

PART 2--PRODUCTS

2.01 PIPELINE THERMOMETERS

A. GENERAL:

Pipeline thermometers shall be suitable for the following temperature range:

Piping Service	Temperature range degrees F
1W, 2W, 3W	0-150

Pipeline thermometers shall indicate fluid temperatures within the pipeline to an accuracy of plus or minus 2 percent of thermometer full scale.

Pipeline thermometers shall be provided with threaded thermowell mountings, designed to permit removal of the thermometer without depressurization or loss of process fluid. For insulated pipes a thermowell with a lagging extension shall be provided.

B. BIMETALLIC THERMOMETERS:

Unless otherwise specified, bimetallic type thermometers shall be of the adjustable angle type mounted for convenient viewing. Bimetallic thermometers shall have type 304 stainless steel case. Thermometer dials shall be a minimum of 5 inches in diameter and shall be equipped with an external adjustment mechanism for zero reset. Bimetallic thermometers shall be Ashcroft Type EH, Marsh Mastertherm, or equal.

C. FILLED THERMOMETERS:

Unless otherwise specified, filled type thermometers shall have minimum scale length of 9 inches and shall be of the adjustable angle type mounted for convenient viewing. Filled thermometers shall consist of a type 304 stainless steel frame and a mercury-filled pyrex tube. The thermometer tube shall be recessed into the frame. Filled thermometers shall be Weksler, Taylor, or equal.

2.02 FLOW AND LEVEL GAGES

A. ROTAMETERS:

Unless otherwise specified, rotameters for purges and other low capacity services shall be Brooks Sho-Rate "50," Wallace & Tiernan 3-inch purge meter, Schutte & Koerting, or equal, with integral needle valve and flow controller. Meter tubes shall be glass, floats shall be stainless steel, and cases shall be aluminum or stainless steel. Unless otherwise specified, meter sizes shall be selected so that the flow rate recommended by the manufacturer of the purged equipment falls within the middle third of the meter scale. Units shall have a 3-inch minimum scale direct reading in the units of flow.

Rotameters for high capacity service shall be glass tube-type with a 5-inch scale and stainless steel frame. Flow range shall be as specified and scales shall indicate the units of flow. Rotameters shall be as manufactured by Brooks, Wallace & Tiernan, Schutte & Koerting, or equal.

B. SIGHT GAGES:

Sight gages shall be 3/4-inch Penberthy 205 Series, Lunkenheimer Fig. 589, or equal, automatic water gage complete with pyrex gage glass and gage glass protector. Overall length of gages, type of mounting, and orientation of set shall be as specified.

C. FLOW INDICATORS:

Flow indicators shall be provided where specified. Each indicator shall consist of a bronze body with threaded ends and a sight glass with rotary wheel. Pressure ratings for flow indicators shall match pipe pressure ratings. Indicators shall be as manufactured by Jacoby-Tarbox, Schutte & Koerting, Eugene Ernst Products, or equal.

2.03 PRESSURE DEVICES

A. GAGE COCKS:

Unless otherwise specified, gage cocks shall be Robertshaw 1303, Ashcroft 1095, or equal. The exposed threads of each gage cock shall be protected by a brass plug.

B. PRESSURE GAGES:

Unless otherwise specified, pressure gage scales shall be selected so that the normal operating pressure falls between 50 and 80 percent of full scale, shall be 4 1/2-inch, 270-degree movement, 1/2-percent accuracy, full-scale, and suitable for bottom stem mounting. Gages shall

have a 316-SS bourdon tube. All gages shall have a 300 series stainless steel case, shatterproof glass, and a 1/2-inch NPT bottom connection.

Pressure gages for air, gas, and low pressure services (0-10 feet) shall be premium grade, heavy-duty bourdon-tube units (bellow type for vacuum) with Delrin bushings and pinion, and stainless steel sector.

Gages on liquid service shall be as noted above, except they shall be provided with an internal pulsation dampening system consisting of either a glycerin fill or a silicone fluid fill. Snubbers or orifices shall not be utilized. Gages shall be Ashcroft Duragauge Fig. 1279, Ametek 1981L, or equal.

C. DIAPHRAGM SEALS:

Unless otherwise specified, seals shall be diaphragm type with 1/4-inch flushing connection, Type 316 stainless steel body and Type 316L diaphragm. Fill fluid shall be Silicone DC200 unless otherwise specified. Seal shall be Mansfield and Green Type SG, Ashcroft Type 101, or equal.

D. PRESSURE SENSORS:

Unless otherwise specified, pressure sensors (tubular chemical seals) shall be the in-line full stream captive sensing liquid type. Wetted parts shall be 316 stainless steel. Flexible cylinder shall be Buna-N unless otherwise specified. Seals shall be rated for 200 psi with 5-inch SC hysteresis. Seals shall be Ronningen-Petter, Red Valve, or equal.

Fill fluid shall be rated for a temperature range of -20 degrees F to 200 degrees F. Capillary tubing shall be armored stainless steel. Fittings shall be provided for vacuum filling of system. Systems that are not factory filled shall be vacuum filled in the field. Filling connections shall be soldered shut after vacuum evacuation and filling.

2.04 STRAINERS

A. AIR AND GAS STRAINERS:

Unless otherwise specified, air and gas line strainers shall be Y-pattern, cast iron body, with 40 mesh Monel screens packed with Everdur wool. Bronze bodies shall be provided with copper piping. Air line strainers shall be fitted with a brass blowoff cock. Strainers shall be Mueller, Armstrong, or equal.

B. WATER STRAINERS:

Steam and water strainers shall be of Y-pattern, unless otherwise specified. Steam strainers shall have carbon steel body; water strainers shall have cast iron body. Bronze bodies shall be provided with copper piping. Strainers shall have 304 stainless steel screens and tapped and plugged blowoff connections. Screen perforations shall be 0.020 inch for steam service and 0.045 inch for water service. Strainers shall be Mueller, Armstrong, or equal.

C. FUEL OIL STRAINERS (NOT USED)

2.05 STEAM TRAPS (NOT USED)

2.06 PURGE WATER AND SEAL WATER CONTROL UNITS

Purge water and seal water control units shall have a stainless steel body, an acrylic flow indicator, a low flow alarm switch, and a glycerin-filled pressure gauge. Water flow and pressure shall be independently adjustable. The pressure gauge and flow indicator scales shall be selected so that the pump manufacturer's recommended settings appear at approximately mid-scale. The low flow alarm switch shall consist of a magnetically-actuated, non-intrusive reed switch rated for 120 VAC use. The switch shall open when the flow rate falls below a pre-set point. Provide single seal flush, quench seal, or double mechanical seal type purge water units as determined by the type of seal used in the pumps the control units are serving. Units mounted outside shall be provided with an insulated heated enclosure. Purge water control units shall be Safeunit manufactured by John Crane, or equal.

2.07 PRODUCT DATA

Manufacturer's product data shall be provided in accordance with Section 01300.

For purge water and seal water control units, Contractor shall submit documentation of flow and pressure requirements from each respective pump manufacturer to verify sizing and initial settings for each unit.

PART 3--EXECUTION

3.01 PIPELINE THERMOMETERS

Unless otherwise specified, filled thermometers shall be used on all water based services, and bimetallic thermometers shall be used for high temperature (300 degrees F or above) steam or gaseous services. Filled thermometers shall be installed where vibration or unstable mounting conditions exist. Thermometers shall be provided for all water and process stream inlets and outlets at each heat exchanger, heat extractor, and chiller; where shown, and adjacent to process taps for temperature sensing or transmitting instrumentation. Thermometers for sludge service shall be provided at elbows with the process sensor oriented in the direction of sludge flow.

3.02 GAGE TAPS

Gage taps shall be provided on the suction and discharge of pumps, fans, compressors, vacuum pumps and blowers. Gage taps shall consist of a 1/4-inch gage cock attached by a threaded nipple to the pipeline, duct or equipment.

3.03 VENTS AND DRAINS

Manual air vents shall be provided at the high points of each reach of pipeline where specified. Air vents shall consist of bronze cock and copper tubing return. Air vents shall be taken

to the nearest floor with cock mounted 4 feet above the floor. Vents in piping systems for fluids containing solids shall be 1-inch nonlubricated eccentric plug valves fitted with quick couplers.

Drains shall be piped to a sump, gutter, floor drain or other collection point with a valve mounted 4 feet above the floor. Drain valves shall be threaded end gate valves of the size specified. When drains cannot be run to collection points, they shall be routed to a point of easy access and shall have hose gate valves of the size specified.

3.04 PURGE WATER AND SEAL WATER CONTROL UNITS

Purge water and seal water control units shall be installed as part of purge water control panels assemblies as detailed on the mechanical drawings. Units shall be installed on the panels and connected to the associated piping in accordance with manufacturer requirements. Contractor shall coordinate with respective pump manufacturer to determine flow and pressure settings for each specific application. The purge and seal water control units shall be adjusted to satisfy these requirements and documentation of required flow and pressure settings shall be submitted as Product Information in accordance with Section 01300.

END OF SECTION

SECTION 15096

PIPE HANGERS AND SUPPORTS

PART 1--GENERAL

1.01 DESCRIPTION

A. SCOPE:

This section specifies hangers and supports for all piping systems specified in Section 15050. This section does not include pipe supports for fire sprinkler systems, pipe anchors, guides or seismic restraints.

B. OPERATING CONDITIONS:

The hangers and supports specified in this section are provided to resist pipe loads occurring primarily in the downward (gravity) direction. For the purpose of pipe hanger and support selection, this section establishes pipe support classifications based on the operating temperatures of the piping contents. Pipe support classifications are as follows:

1. Hot Systems
   - A - 1. 120 degrees F to 450 degrees F
   - A - 2. 451 degrees F to 750 degrees F
   - A - 3. Over 750 degrees F

2. Ambient Systems
   - B. 60 degrees F to 119 degrees F

3. Cold Systems
   - C - 1. 33 degrees F to 59 degrees F
   - C - 2. -20 degrees F to 32 degrees F

C. HANGER AND SUPPORT SELECTION:

The Contractor shall cause the pipe hangers and supports to be designed by the design professional retained under the provisions of paragraph 15050-1.02 C. This provision, however, shall not relieve the Contractor of overall responsibility for this portion of the work. Hanger and support selection shall be based on the following:

1. The Contractor shall select pipe hangers and supports as specified in the project manual. Selections shall be based upon the pipe support classifications specified in MSS-SP 69, the piping insulation thickness specified in Section 15250, and any special requirements which may be specified in the project manual.

2. The Contractor shall review the piping layout in relation to the surrounding structure and adjacent piping and equipment before selecting the type of support to be used at each hanger point.

3. The pipe hanger and support system shall be coordinated with the seismic restraint system specified under Section 15097.

4. Hangers and supports shall withstand all static and specified dynamic conditions of loading to which the piping and associated equipment may be subjected. As a minimum, consideration shall be given to the following conditions:

    a. Weights of pipe, valves, fittings, insulating materials, suspended hanger components, and normal fluid contents.

    b. Weight of hydrostatic test fluid or cleaning fluid if normal operating fluid contents are lighter.

    c. Reaction forces due to test and operational conditions.

    d. Reaction forces due to the operation of safety, relief, or other valves.

    e. Wind, snow or ice loadings on outdoor piping.

    f. Supports shall be designed to prevent transfer of the weight of piping, valves and piping appurtenances to equipment piping connections. All supports adjacent at equipment connections to piping systems shall have provisions for vertical and horizontal adjustment. Two flexible piping connections not less than one pipe diameter apart shall be provided between piping supports and any equipment piping connection.

5. Hangers and supports shall be sized to fit the outside diameter of pipe, tubing, or, where specified, the outside diameter of insulation.

6. Where negligible movement occurs at hanger locations, rod hangers shall be used for suspended lines, wherever practical. For piping supported from below, bases, brackets or structural cross members shall be used.

7. Hangers for the suspension of size 2 1/2 inches and larger pipe and tubing shall be capable of vertical hanger component adjustment under load.

8. The supporting systems shall provide for and control the free or intended movement of the piping including its movement in relation to that of connected equipment.

9. Where there is horizontal movement at a suspended type hanger location, hanger components shall be selected to allow for swing. The vertical angle of the hanger rod shall not, at any time, exceed 4 degrees.

10. There shall be no contact between a pipe and hanger or support component of dissimilar metals. Prevent contact between dissimilar metals when supporting copper tubing by use of copper-plated, rubber, plastic or vinyl coated, or stainless steel hanger and support components.

11. Unless otherwise specified, existing pipes and supports shall not be used to support new piping.

12. Unless otherwise specified, pipe support components shall not be attached to pressure vessels.

13. Stock hanger and support components shall be used wherever practical.

14. A fiberglass framing channel shall be provided where specified.

1.02 QUALITY ASSURANCE

A. REFERENCES:

This section contains references to the following documents. They are a part of this section as specified and modified. In case of a conflict between the requirements of this section and those of the listed documents, the requirements of this section shall prevail.

Unless otherwise specified, references to documents shall mean the documents in effect at the time of Advertisement for Bids or Invitation to Bid (or on the effective date of the Agreement if there were no Bids). If referenced documents have been discontinued by the issuing organization, references to those documents shall mean the replacement documents issued or otherwise identified by that organization or, if there are no replacement documents, the last version of the document before it was discontinued. Where document dates are given in the following listing, references to those documents shall mean the specific document version associated with that date, regardless of whether the document has been superseded by a version with a later date, discontinued or replaced.

Reference	Title
AISC M011	Manual of Steel Construction - 8th Edition
FEDSPEC WW-H-171e	Hangers and Supports, Pipe
MFMA-1	Metal Framing Standards Publication
MFMA-101	Guidelines for the Use of Metal Framing
MSS SP-58	Pipe Hangers and Supports - Materials, Design and Manufacture
MSS SP-69	Pipe Hangers and Supports - Selection and Application
MSS SP-89	Pipe Hangers and Supports – Fabrication and Installation

Reference	Title
	Practices

B. DESIGN:

The Contractor shall cause the design of pipe hanger and support systems to be developed in conjunction with preparation of the design seismic restraints and expansion control system by the design professional selected in accordance with Paragraph 15050-1.02 C. The pipe system drawings specified in paragraph 15050-2.04 shall show the hanger and support locations as well as the details of the seismic restraints and expansion control systems. The pipe hanger and support design drawings and calculations shall be prepared and signed by the design professional and shall bear the design professional's registration seal.

1.03 SUBMITTALS

The following information shall be provided in accordance with Section 01300:

1. Pipe hanger and support system drawings and calculations as specified in paragraph 15096-1.02 B.

2. Anchor bolt calculations in accordance with Section 05501.

PART 2--PRODUCTS

2.01 ACCEPTABLE PRODUCTS

Standard pipe supports and components shall be manufactured by B-Line, Carpenter & Patterson, Kin-Line, Grinnell, Michigan, Pipe Shields Incorporated, Superstrut, Unistrut, or equal.

Pipe support components shall conform to the requirements of MSS SP-69 and FEDSPEC WW-H-171e and governing state and local codes. In case of conflict, governing state or local codes shall be followed. Pipe hanger and support materials, design, and manufacture shall conform to the requirements of MSS SP-58. Pipe hanger and support fabrication and installation shall conform to the requirements of MSS-SP-89. Metal framing system components shall conform to the Metal Framing Manufacturer's Association standard MFMA-1 and MFMA-101.

2.02 MATERIALS

A. GENERAL:

[1]Unless otherwise specified, pipe hangers and supports, structural attachments, fittings and accessories manufactured of iron or steel shall be hot-dip or mechanically galvanized after fabrication. Nuts, bolts and washers may be zinc-plated except for those for submerged service, or subject to moisture or corrosive atmosphere, as specified in paragraph 16000-1.05 B, which shall be Type 316 stainless steel. Also listed in paragraph 16000-1.05 B are

corrosive areas. In those areas, all pipe support, anchor, and seismic brace components (not just fittings and accessories) shall be made of fiberglass for chemical areas, or stainless steel otherwise. Pipe supports for submerged service shall be stainless steel.

2.03 THERMAL PIPE HANGER SHIELD

A. GENERAL:

Thermal shields shall be provided at hanger, support and guide locations on pipe requiring insulation. The shield shall consist of an insulation layer encircling the entire circumference of the pipe and a steel jacket encircling the insulation layer. The thermal shield shall be the same thickness as the piping system insulation specified in Section 15250. The standard shield shall be used for hot systems and the vapor barrier shield shall be used for cold systems. Stainless steel band clamps shall be used where specified to ensure against slippage between the pipe wall and the thermal shield.

B. STANDARD SHIELD:

1. INSULATION:

a. Hydrous calcium silicate, high density, waterproof

b. Compressive strength: 100 psi average

c. Flexural strength: 75 psi average

d. K factor: 0.38 at 100 degrees F mean

e. Temperature range: 20 degrees F to 500 degrees F

2. STEEL JACKET: Galvanized steel. Gage shall be the manufacturer's standard supplied for the given pipe size.

3. CONNECTION: Shield shall have butt connection to pipe insulation. Steel jacket and insulation shall be flush with end.

C. VAPOR BARRIER SHIELD:

1. INSULATION:

a. Hydrous calcium silicate, high density, waterproof

b. Compressive strength: 100 psi average

c. Flexural strength: 75 psi average

d. K factor: 0.38 at 100 degrees F mean

e. Temperature range: 20 degrees F to 500 degrees F

2. STEEL JACKET: Galvanized steel. Gage shall be the manufacturer's standard supplied for the given pipe size.

3. CONNECTION: Shield shall have butt connection to pipe insulation. Insulation shall extend 1 inch each side of steel jacket for vaportight connection to pipe insulation vapor barrier.

2.04 PRODUCT DATA

The following information shall be provided in accordance with Section 01300:

1. Design Professional's monthly and final reports as specified in paragraph 15096-3.05.

PART 3--EXECUTION

3.01 HANGER AND SUPPORT LOCATIONS

The Contractor shall locate hangers and supports as near as possible to concentrated loads such as valves, flanges, etc. Locate hangers, supports and accessories within the maximum span lengths specified in the project manual to support continuous pipeline runs unaffected by concentrated loads.

At least one hanger or support shall be located within 2 feet from a pipe change in direction.

For any valve 6 inches in size and greater, at least one hanger or support shall be located within 2 feet in either direction of the valve.

The Contractor shall locate hangers and supports to ensure that connections to equipment, tanks, etc., are substantially free from loads transmitted by the piping.

Where piping is connected to equipment, a valve, piping assembly, etc., that will require removal for maintenance, the piping shall be supported in such a manner that temporary supports shall not be necessary for this procedure.

Pipe shall not have pockets formed in the span due to sagging of the pipe between supports caused by the weight of the pipe, medium in the pipe, insulation, valves and fittings.

3.02 INSTALLATION

Welded and bolted attachments to the building structural steel shall be in accordance with the requirements of AISC M011. Unless otherwise specified, there shall be no drilling or burning of holes in the building structural steel.

Hanger components shall not be used for purposes other than for which they were designed. They shall not be used for rigging and erection purposes.

The Contractor shall install items to be embedded before concrete is poured. Fasten embedded items securely to prevent movement when concrete is poured.

Embedded anchor bolts shall be used instead of concrete inserts for support installations in new concrete areas below water surface or normally subject to submerging. Otherwise, anchor bolts shall be provided in accordance with Section 05501.

The Contractor shall install thermal pipe hanger shields on insulated piping at required locations during hanger and support installation. Butt joint connections to pipe insulation shall be made at the time of insulation installation in accordance with the manufacturer's recommendations.

Hanger and support components in contact with plastic pipe shall be free of burrs and sharp edges.

Rollers shall roll freely without binding.

Finished floor beneath Type N structural attachments and framing channel post bases shall be roughed prior to grouting. Grout between base plate and floor shall be free of voids and foreign material.

Baseplates shall be cut and drilled to specified dimensions prior to welding stanchions or other attachments and prior to setting anchor bolts.

Plastic or rubber end caps shall be provided at the exposed ends of all framing channels that are located up to 7 feet above the floor.

3.03 ADJUSTMENTS

The Contractor shall adjust hangers and supports to obtain required pipe slope and elevation. Shims made of material that is compatible with the piping material may be used. Stanchions shall be adjusted prior to grouting their baseplates.

3.04 ANCHOR BOLTS

Anchor bolts in new concrete shall be cast in place. Refer to Section 05501.

3.05 INSPECTION AND CERTIFICATION

The design professional retained by the Contractor under the provisions of paragraphs 15050-1.02 C and 15096-1.02 B shall inspect the pipe hangers and support systems at not more than weekly intervals during construction and furnish the Construction Manager with weekly reports. The design professional shall inspect the completed pipe hanger and support system before the Owner assumes beneficial occupancy and provide written certification that the installation conforms to the design professional's design. The certification shall bear the design professional's registration seal and original signature.

END OF SECTION

SECTION 15097

SEISMIC RESTRAINTS FOR PIPING

PART 1--GENERAL

1.01 DESCRIPTION

A. SCOPE:

This section specifies seismic restraints for bracing all piping systems specified in Section 15050. This section does not include seismic restraints for fire sprinkler systems.

B. DEFINITIONS:

1. Longitudinal direction--direction parallel to the pipe axis.

2. Lateral direction--direction perpendicular to the pipe axis.

C. OPERATING CONDITIONS:

The seismic restraints specified in this section are provided to resist pipe movements and loads occurring as a result of an earthquake or other seismic event.

All piping systems shall be provided with seismic restraints conforming to governing state and local codes. Seismic restraints shall conform to the guidelines given in the SMACNA Seismic Restraint Manual for the Seismic Hazard Level consistent with the requirements of governing state and local codes. In case of conflict, the governing state or local code shall be followed.

D. RESTRAINT SELECTION:

1. The Contractor shall select, locate and provide seismic restraints for piping in accordance with this section. As set forth in Paragraph 15050-1.02 C, this work shall be the product of a design professional retained by the Contractor.

2. The Contractor shall review the piping layout in relation to the surrounding structure and adjacent piping and equipment before selecting the restraint to be used at each point.

3. Seismic restraints may be omitted from the following installations:

a. Gas piping less than 1-inch inside diameter.

b. All other piping less than 2 1/2-inch inside diameter.

4. Piping systems shall not be braced to dissimilar parts of a building or to dissimilar building systems that may respond in a different mode during an earthquake. Examples: wall and a roof; solid concrete wall and a metal deck with lightweight concrete fill.

5. Restraints shall be sized to fit the outside diameter of the pipe, tubing, or, where specified, the outside diameter of insulation.

6. There shall be no contact between a pipe and restraint component of dissimilar metals. The contractor shall prevent contact between dissimilar metals when restraining copper tubing by the use of copper-plated, rubber, plastic or vinyl coated, or stainless steel restraint components.

7. Branch lines shall not be used to brace main lines.

8. Seismic bracing shall not limit the expansion and contraction of the piping system.

1.02 QUALITY ASSURANCE

A. REFERENCES:

This section contains references to the following documents. They are a part of this section as specified and modified. In case of a conflict between the requirements of this section and those of the listed documents, the requirements of this section shall prevail.

Unless otherwise specified, references to documents shall mean the documents in effect at the time of Advertisement for Bids or Invitation to Bid (or on the effective date of the Agreement if there were no Bids). If referenced documents have been discontinued by the issuing organization, references to those documents shall mean the replacement documents issued or otherwise identified by that organization or, if there are no replacement documents, the last version of the document before it was discontinued. Where document dates are given in the following listing, references to those documents shall mean the specific document version associated with that date, whether or not the document has been superseded by a version with a later date, discontinued or replaced.

Reference	Title
AISC Manual of Steel Construction	American Institute of Steel Construction Manual of Steel Construction, Allowable Stress Design, 9th Edition
MFMA-2	Metal Framing Standards Publication
MFMA-101	Guidelines for the Use of Metal Framing
MSS SP-58	Pipe Hangers and Supports - Materials, Design and Manufacture
MSS SP-69	Pipe Hangers and Supports - Selection and Application
MSS-SP-89	Pipe Hangers and Supports – Fabrication and Installation

Reference	Title
	Practices
SMACNA	Seismic Restraint Manual—Guidelines for Mechanical Systems

B. DESIGN:

The seismic restraint system shall be designed by the design professional retained under Paragraph 15050-1.02 C. Seismic restraint details shall be designed in conjunction with preparation of pipe system hangers and drawings specified in paragraph 15050-2.04. All drawings and work product for the seismic restraint system shall bear the design professional's registration seal and signature. The requirement, however, shall not be construed as relieving the Contractor of responsibility for this portion of the work.

PART 2--PRODUCTS

2.01 ACCEPTABLE PRODUCTS

Standard pipe restraints and components shall be manufactured by Carpenter & Patterson, B-Line, Kin-Line, ITT Grinnell, Michigan, Pipe Shields Incorporated, Superstrut, Unistrut, or equal. Pipe restraint materials, design, manufacture, installation, and application shall conform to the requirements of MSS SP-58, MSS-SP-69, MSS-SP-89, MFMA-1, and MFMA-101.

2.02 MATERIALS

A. GENERAL:

Unless otherwise specified, restraints manufactured of iron or steel, including braces, pipe and structural attachments, shall be hot-dip galvanized after fabrication. Nuts, bolts and washers, fittings and accessories, may be mechanically zinc-coated except for those subject to moisture or corrosive atmosphere, which are listed in paragraph 16000-1.05 B; those compounds shall be type 304 stainless steel. Also listed in paragraph 16000-1.05 B are corrosive areas specifically requiring fiberglass materials. In those areas, all pipe supports, anchor and seismic brace components (not just fittings and accessories) shall be made of fiberglass.

2.03 THERMAL PIPE HANGER SHIELD

Thermal shields shall be provided at seismic restraint locations on pipe requiring insulation. Thermal pipe hanger shields shall be as specified in paragraph 15096-2.03. Stainless steel band clamps shall be provided on thermal shields at longitudinal pipe restraint locations.

2.04 PRODUCT DATA

The following information shall be provided in accordance with Section 01300:

1. Seismic restraint system drawings and calculations as specified in paragraph 15097-1.02 B.

2. Seismic restraint locations and legend as specified in paragraph 15097-3.01.

3. The design professional's monthly reports and certification of final installation as specified in paragraphs 15050-1.02 C and 15097-3.03.

PART 3--EXECUTION

3.01 PIPE RESTRAINT LOCATIONS

The first seismic restraint on a piping system shall be located not more than 10 feet from the main riser, entrance to a building or piece of equipment.

Cast iron pipe shall be braced on each side of a change in direction of 90 degrees or more. Joints in risers shall be braced or stabilized between floors.

No-hub and bell and spigot cast iron soil pipe shall be braced longitudinally every 20 feet and laterally every 10 feet.

Lateral bracing for one pipe section may also act as longitudinal bracing for the pipe section connected perpendicular to it, if the bracing is installed within 24 inches of the elbow or tee of the same size.

Seismic restraint locations and components shall be indicated on the piping layout drawings required by paragraph 15050-2.04. The drawings shall bear a legend giving load information and restraint component selection at each restraint location and shall be sealed and signed by the design professional retained by the Contractor for design of the pipe hanger and support system under the provisions of paragraphs 15050-1.02 C and 15097-1.02 B.

3.02 INSTALLATION

Rod stiffener assemblies shall be used at seismic restraints for hanger rods over 6 inches in length. A minimum of two rod stiffener clamps shall be used on any rod stiffener assembly.

Lateral and longitudinal bracing shall be installed between 45 degrees above and 45 degrees below horizontal, inclusive, relative to the horizontal centerline of the pipe.

Welded and bolted attachments to the building structural steel shall be in accordance with the requirements of AISC M011. There shall be no drilling or burning of holes in the building structural steel without approval of the Construction Manager.

Embedded anchor bolts shall be used instead of concrete inserts for seismic brace installations in new concrete areas below water surface or normally subject to submerging. Otherwise, anchor bolts shall be provided in accordance with Section 05501.

The Contractor shall install thermal pipe hanger shields on insulated piping at required locations during restraint installation. Butt joint connections to pipe insulation shall be made at the time of insulation installation in accordance with the manufacturer's recommendations.

Restraint components in contact with plastic pipe shall be free of burrs and sharp edges.

Rollers shall roll freely without binding.

Plastic or rubber end caps shall be provided at the exposed ends of all framing channels that are located up to 7 feet above the floor.

3.03 INSPECTION AND CERTIFICATION

The designed professional retained by the Contractor under the provisions of paragraphs 15050-1.02 C and 15097-1.02 B shall inspect the completed seismic restraint system and provide written certification that the installation conforms to the design professional’s design. The certification shall bear the design professional’s registration seal and signature.

END OF SECTION

SECTION 15098

EXPANSION CONTROL FOR PIPING

PART 1--GENERAL

1.01 DESCRIPTION

A. SCOPE:

This section specifies expansion control for the piping systems specified in paragraph 15098-1.01 C. This section addresses pipe anchorage, pipe guides, and expansion control by either expansion joints or pipe deflection.

B. DEFINITIONS:

Term	Definition
Expansion joint	Any device containing one or more bellows used to absorb dimensional changes.
Main anchor	An attachment between a structure and a pipe which must withstand the full pipeline thrust due to pressure, pipe bending, pipe compression, flow, spring forces, pipe and contents weight and other pipe forces.
Intermediate anchor	An attachment between a structure and a pipe which withstands the same forces as a main anchor except the pressure forces.
Sliding anchor	An attachment between a structure and a pipe which absorbs forces in one direction while permitting motion in another.
Pipe guide	A device fastened to a structure, which permits the pipeline to move freely in only one direction, along the axis of the pipe.
Pipe section	That portion of pipe between two anchors.
Planar pipe guide	A device fastened to a structure, which permits transverse movement or bending of the pipeline in one plane.
Lateral direction	Direction perpendicular to the pipe axis
Longitudinal direction	Direction parallel to the pipe axis

C. OPERATING CONDITIONS:

Expansion control as specified in this section shall be provided to control pipe movements and loads occurring as a result of pipeline temperature changes.

Those piping systems listed in the following table shall be provided with expansion control conforming to good engineering practice.

Piping system	Minimum temperature, degrees F	Maximum temperature, degrees F
A	17	205
AA	17	205

1.02 QUALITY ASSURANCE

A. REFERENCES:

This section contains references to the following documents. They are a part of this section as specified and modified. In case of conflict between the requirements of this section and those of the listed documents, the requirements of this section shall prevail.

Unless otherwise specified, references to documents shall mean the documents in effect at the time of Advertisement for Bids or Invitation to Bid (or on the effective date of the Agreement if there were no Bids). If referenced documents have been discontinued by the issuing organization, references to those documents shall mean the replacement documents issued or otherwise identified by that organization or, if there are no replacement documents, the last version of the document before it was discontinued. Where document dates are given in the following listing, references to those documents shall mean the specific document version associated with that date, whether or not the document has been superseded by a version with a later date, discontinued or replaced.

Reference	Title
AISC Manual of Steel Construction	American Institute of Steel Construction, Manual of Steel Construction, Allowable Stress Design - 9th Edition
EJMA-93	Standards of the Expansion Joint Manufacturers Association, Inc., Sixth Edition, 1993
EJMA-85	A Practical Guide to Expansion Joints, Copyright 1985, Expansion Joint Manufacturers Association, Inc.

B. DESIGN:

The expansion control system shall be designed by the design professional retained for design of the pipe support systems and seismic restraint systems as provided under paragraph 15050-1.02 C. Expansion control details shall be designed in conjunction with preparation of pipe system hangers and seismic restraint systems drawings specified in paragraph 15050-2.04. The resulting drawings and work product for the expansion control system shall bear the design professional's registration seal and signature. The requirement, however, shall not be construed as relieving the Contractor of responsibility for this portion of the work.

C. DESIGN GUIDELINES:

The design professional shall use the following guidelines in preparation of the designs and calculations specified in paragraph 15098-1.01 B:

1. The difference between the minimum and maximum temperatures listed in the table in paragraph 15098-1.02 C shall be used for calculating pipe expansion.

2. Published coefficients of thermal expansion for pipe materials shall be used for the listed temperature range. The source of the coefficients of expansion used in the calculations shall be included with the data provided as Product Data.

3. Expansion control systems shall be designed for maximum reliability. Unless otherwise indicated on the Drawings, "L", "U", or "Z" bends shall be employed to control expansion in preference over expansion joints.

4. Expansion control systems using pipe bends shall be designed to limit bending stress in the pipe associated with deflection at the worst case temperature difference. The maximum allowable bending stress shall be 1/3 of the yield stress for the pipe material. If loading conditions or uncertainties warrant, a lower allowable stress value shall be used. A recognized pipe bending stress calculation method and documentation supporting its use shall be provided as Product Data.

5. The requirements set forth in Section 15090 shall prevail if expansion joints are used. Expansion control design for expansion joints shall conform to the guidelines given in the Standards of The Expansion Joint Manufacturers Association, Inc. (EJMA).

6. If the design professional chooses to use expansion control or pipe support methods that involve higher loadings on the structure than are indicated on the drawings, the Engineer shall be notified in the submittal required in paragraph 15050-1.03. The requested loads shall be listed and the engineer will redesign the structure as necessary at the Contractor’s expense.

7. The test pressures listed in the PIPESPEC sheets shall be used when calculating pressure forces.

8. Pipe guides or planar pipe guides shall be provided to control the movement of pipes when "L", "U", or "Z" bends are used for expansion control. The guides shall be located as indicated in EJMA standards. An alternative recognized standard may be used for this purpose only upon approval by the Engineer.

9. Recommended main anchor locations are shown on the drawings. Intermediate anchors shall be provided as needed. Maximum forces that

the structure can withstand at the main anchor points are noted on the drawings. Anchors shall be designed to attach to the structure and solidly to the pipe. Pipe clamps or U-bolts are not allowed unless they are designed to withstand the forces imposed upon the anchor and have stops welded to the pipe so that the pipe cannot slip in the anchor.

10. Anchors and guides shall be coordinated with the pipe support systems specified in Section 15096 and seismic restraints specified in Section 15097.

11. The design of the expansion control, pipe support and seismic restraints for the listed piping systems shall be integrated to provide maximum flexibility for maintenance access to equipment, appurtenances such as valves etc., and to the pipe itself.

12. The piping layout indicated shall be reviewed in relation to, surrounding structures, adjacent piping and equipment before selecting the anchors, guides, and expansion control method to be used at each point.

13. There shall be no metal-to-metal contact between a pipe and restraint component of dissimilar metals.

14. Branch lines shall not be used to anchor main lines.

15. For elevated pipe sections, fabricated support frames or other appropriate structures shall be designed to withstand the specified loads plus gravity and seismic loads. The supports shall be designed to provide access to equipment, walkways, gates, and other piping.

1.03 SUBMITTALS

The following information shall be provided in accordance with Section 01300:

1. Expansion control schedules as specified in paragraph 15098-3.01.

2. Anchor bolt calculations in accordance with Section 05501.

PART 2--PRODUCTS

2.01 MATERIALS

Unless otherwise specified, anchors, and guides shall be manufactured of iron or steel, including braces, pipe and structural attachments, and shall be hot-dip galvanized after fabrication. Supports cast integrally with cast iron fittings are specifically prohibited for use in any application where shear forces may be imposed on the support. Structural anchors may be fabricated from structural steel and coated as specified in Section 09900. Nuts, bolts and washers may be zinc-plated except for those subject to moisture or corrosive atmosphere, as specified in paragraphs 16000-1.05 B and C, which shall be Type 316 stainless steel. Also listed in paragraph 16000-

1.05 C are corrosive areas specifically requiring fiberglass materials. In those areas, all pipe support, anchor and brace components (not just fittings and accessories) shall be made of fiberglass.

2.02 PRODUCT DATA

The following product data shall be provided as specified in Section 01300:

1. The design professional's monthly reports and final certification, as specified under paragraph 15098-3.03.

PART 3--EXECUTION

3.01 EXPANSION CONTROL SCHEDULES

A. GENERAL:

Anchor, guide, and expansion joint locations shall be indicated on the piping layout drawings required by paragraphs 15050-2.04 and 15098-1.02 B. In addition, schedules shall be prepared as specified below.

B. ANCHORS:

The anchor schedule shall list as a minimum:

1. Anchor Point Label
2. Pipe Size and Service
3. Contract Drawing No.
4. Layout Drawing No.
5. Forces
6. Load, pounds
7. Direction
8. Anchor Description
9. Remarks

C. GUIDES:

The guide schedule shall list as a minimum:

1. Guide Label
2. Pipe Size and Service
3. Contract Drawing No.
4. Layout Drawing No.
5. Guide Description
6. Remarks

D. EXPANSION JOINTS:

The expansion joint schedule shall list as a minimum:

1. Expansion Joint Label
2. Pipe Size and Service
3. Contract Drawing No.
4. Layout Drawing No.
5. Movement, inches
   a. Lateral movement
   b. Compression movement
   c. Extension movement
   d. Angular movement
6. Maximum Spring Force, pounds
7. Test Pressure, psig
8. Pressure Force, pounds
9. Total Forces
10. Load, pounds
11. Direction
12. Expansion Joint Description
13. Special Features
14. Remarks

3.02 INSTALLATION

The Contractor shall install the expansion control system in accordance with the drawings required in paragraph 15098-1.02 B.

Welded and bolted attachments to the building structural steel shall be in accordance with the requirements of the AISC Manual of Steel Construction. There shall be no drilling or burning of holes in the building structural steel without approval of the Engineer.

Unless otherwise specified, embedded anchor bolts shall be used instead of concrete inserts, wedge anchors, expansion anchors, adhesive, or other non-embedded type of anchor for expansion control installations in areas below water surface or normally subject to submerging.

The Contractor shall install thermal pipe hanger shields on insulated piping at required locations during guide installation. Butt joint connections to pipe insulation shall be made at the time of insulation installation in accordance with the manufacturer's recommendations. Anchors shall be directly connected to the pipe by welding or another acceptable, positive means.

Components in contact with plastic pipe shall be free of burrs and sharp edges.

Rollers shall roll freely without binding.

Plastic or rubber end caps shall be provided at the exposed ends of all framing channels that are located up to 7 feet above the floor.

3.03 INSPECTION AND CERTIFICATION

The design professional retained by the Contractor under the provisions of paragraphs 15050-1.02 C and 15098-1.02 B shall inspect the completed expansion control system at not more than bi-weekly intervals during construction and furnish the Engineer with monthly reports. The design professional shall inspect the completed expansion control system before the Owner assumes beneficial occupancy and provide written certification that the installation conforms to the design profession's design. The certification shall bear the design professional's registration seal and signature.

END OF SECTION

SECTION 15101

GATE VALVES

PART 1--GENERAL

1.01 DESCRIPTION

This section specifies bronze and iron-body, solid-wedge gate valves. Iron body valves shall be bronze mounted.

1.02 QUALITY ASSURANCE

A. REFERENCES:

This section contains references to the following documents. They are a part of this section as specified and modified. Where a referenced document contains references to other standards, those documents are included as references under this section as if referenced directly. In the event of conflict between the requirements of this section and those of the listed documents, the requirements of this section shall prevail.

Unless otherwise specified, references to documents shall mean the documents in effect at the time of Advertisement for Bids or Invitation to Bid (or on the effective date of the Agreement if there were no Bids). If referenced documents have been discontinued by the issuing organization, references to those documents shall mean the replacement documents issued or otherwise identified by that organization or, if there are no replacement documents, the last version of the document before it was discontinued. Where document dates are given in the following listing, references to those documents shall mean the specific document version associated with that date, regardless of whether the document has been superseded by a version with a later date, discontinued or replaced.

Reference	Title
ANSI B16.1	Cast Iron Pipe Flanges and Flanged Fittings Class 25, 125, 250 and 800
ASTM A126	Gray Iron Castings for Valves, Flanges, and Pipe Fittings
AWWA C500	Gate Valves for Water and Sewerage Systems

B. DESIGN CRITERIA:

Gate valves 3 inches through 48 inches in size shall comply with AWWA C500, including applicable hydrostatic testing. Gate valves smaller than 3 inches shall be subject to hydrostatic tests at the test pressure.

PART 2--PRODUCTS

2.01 MATERIALS

Materials of construction shall be as follows:

Component	Material
Body:	
3 inches and smaller	Bronze
Larger than 3 inches	Cast iron, ASTM A126, Class B
Wedge:	
3 inches and smaller	Bronze
Larger than 3 inches	Cast iron, ASTM A126, Class B
Mounting	Bronze
Stem	Bronze, AWWA C500
Seat rings	Bronze, Grade A, AWWA C500

Materials specified are considered the minimum acceptable for the purposes of durability, strength, and resistance to erosion and corrosion. The Contractor may propose alternative materials for the purpose of providing greater strength or to meet required stress limitations. However, alternative materials must provide at least the same qualities as those specified for the purpose.

2.02 MANUFACTURE

A. GENERAL:

Unless otherwise specified, bronze gate valves shall be provided with integral seats.

Iron body valves shall be provided with screwed-on seat rings. Exposed gate valves shall be rising stem type. Buried or submerged gate valves shall be of the nonrising stem type. Rising stem valves and brass nonrising stem valves shall be provided with a Teflon braid packing. Iron body nonrising stem valves shall be provided with 0-ring stem seals.

B. END CONNECTIONS:

Gate valve end connections shall be flanged or threaded as specified. Threaded ends shall not be provided on gate valves with end connections larger than 4 inches. End flanges shall be integral with the gate valve body and be faced' and drilled in accordance with ANSI B16.1 for 125-pound flanges.

C. MANUAL OPERATORS:

Unless specified otherwise, valves less than 12 inch size shall be provided with handwheels, and valves 12 inches and larger shall be provided with geared operators.

D. BYPASS:

Unless otherwise specified, gate valves 16 inches and larger, shall be provided with a bypass valve sized in accordance with AWWA C500.

2.03 PRODUCT DATA

The following information shall be provided in accordance with Section 01300:

1. Affidavits of compliance, as required by AWWA C500.
2. Hydrostatic test results.

PART 3--EXECUTION

Gate valves shall be installed in the closed position.

END OF SECTION

SECTION 15102

RESILIENT SEATED GATE VALVES

PART 1--GENERAL

1.01 DESCRIPTION

This section specifies reduced wall resilient seated gate valves. All products furnished shall conform to the applicable requirements of ANSI/AWWA C-515-01 standards.

1.02 QUALITY ASSURANCE

A. REFERENCES:

This section contains references to the following documents. They are a part of this section as specified and modified. Where a referenced document contains references to other standards, those documents are included as references under this section as if referenced directly. In the event of conflict between the requirements of this section and those of the listed documents, the requirements of this section shall prevail.

Unless otherwise specified, references to documents shall mean the documents in effect at the time of Advertisement for Bids or Invitation to Bid (or on the effective date of the Agreement if there were no Bids). If referenced documents have been discontinued by the issuing organization, references to those documents shall mean the replacement documents issued or otherwise identified by that organization or, if there are no replacement documents, the last version of the document before it was discontinued. Where document dates are given in the following listing, references to those documents shall mean the specific document version associated with that date, regardless of whether the document has been superseded by a version with a later date, discontinued or replaced.

Reference	Title
ANSI B16.1	Cast Iron Pipe Flanges and Flanged Fittings Class 25, 125, 250 and 800
ASTM A536	Ductile Iron with no more than 0.08% phosphorus
ASTM B763 UNS C99500	Bronze for valve wedge and construction
ASTM B62 UNS C83600	Bronze
ASTM B584 UNS C84400	Stem Nuts Only
ASTM A126	Gray Iron Castings for Valves, Flanges, and Pipe Fittings
AWWA C515	Gate Valves for Water and Sewerage Systems

B. DESIGN CRITERIA:

Gate valves 3 inches through 48 inches in size shall comply with AWWA C515, including applicable hydrostatic testing. Gate valves smaller than 3 inches shall be subject to hydrostatic tests at the test pressure.

PART 2--PRODUCTS

2.01 MATERIALS

Materials of construction shall be as follows:

Component	Material
Body:	
3 inches and smaller	Bronze
Larger than 3 inches	Cast iron, ASTM A126, Class B
Wedge:	
3 inches and smaller	Bronze
Larger than 3 inches	Cast iron, ASTM A126, Class B
Mounting	Bronze
Stem	Bronze, AWWA C515
Seat rings	Bronze, Grade A, AWWA C515

Materials specified are considered the minimum acceptable for the purposes of durability, strength, and resistance to erosion and corrosion. The Contractor may propose alternative materials for the purpose of providing greater strength or to meet required stress limitations. However, alternative materials must provide at least the same qualities as those specified for the purpose.

2.02 MANUFACTURE

A. GENERAL:

Unless otherwise specified, bronze gate valves shall be provided with integral seats.

Gaskets, “O” rings, Coatings, and elastomers shall meet or exceed the material requirements of Section 4.2 Materials of AWWA C515-01.

Valve components of brass or bronze shall be manufactured to ASTM recognized alloy specifications of low zinc content bronze, as shown in Section 4.2 Materials ANSI/AWWA Standard C515-01 or the latest revision thereof. Material for the stem shall have minimum yield strength of 40,000 psi. Stem nut material shall comply with the requirements shown in paragraph 15102-2.01. The stem shall have a visible external marking at the top to indicate

low-zinc, high strength material. The marking shall include a red plastic or neoprene washer placed around the top of the stem under the operating nut.

The following parts of the valve shall be made of ductile iron: bonnet and body. Shell thickness shall meet the minimum thickness requirements of Table 1 *Minimum Thickness of Body and Bonnet* of Section 4.4 Detailed Design of ANSI/AWWA C515-01.

Glands and bushings, if used for the valves, shall be made of ASTM B763 bronze UNS C99500. The stem shall be made of cast, forged, or rolled ASTM B763 bronze UNS C99500. The gate may be made of bronze ASTM B763 UNS C99500. Stem seals shall be “O” ring type. The seals shall be designed for dynamic applications. The design shall be such that the seal above the stem collar can be replaced with the valve under full pressure in the fully open position. Materials for the “O” ring packing plate shall be in accordance with Section 4.4.6 Stem Sealing of the ANSI/AWWA C515-01 Standard or the latest revision thereof.

Iron body valves shall be provided with screwed-on seat rings. Exposed gate valves shall be rising stem type. Buried or submerged gate valves shall be of the nonrising stem type. Rising stem valves and brass nonrising stem valves shall be provided with a Teflon braid packing. Iron body nonrising stem valves shall be provided with “O” ring stem seals.

Resilient seats shall be applied to the gate and shall seat against a corrosion resistant surface. The non-metallic seating surface shall be applied in a manner to withstand the action of line fluids and the operation of the sealing gate under long-term service. A metallic surface shall have a corrosion resistance equivalent to or better than bronze. A non-metallic surface shall be in compliance with ANSI/AWWA C550. The gate must be fully encapsulated by an elastomer without thin spots or voids. Resilient seats shall be bonded. ASTM D429, either method A or method B, shall prove the method used for bonding or vulcanizing. For method A, the minimum strength shall not be less than 250 psi. For method B, the peel strength shall be 75 lb/in.

Enclosed and buried valves shall be coated inside and outside with a fusion bonded epoxy having nominal 8 mils dry film thickness, which meets or exceeds AWWA C550-01 and to the maximum extent possible shall be free of holidays. All coatings in contact with the potable water shall be approved for potable water immersion service per ANSI/NSF Standard 61.

B. END CONNECTIONS:

Gate valve end connections shall be flanged or threaded as specified. Threaded ends shall not be provided on gate valves with end connections larger than 4 inches. End flanges shall be integral with the gate valve body and be faced and drilled in accordance with ANSI B16.1 for 125-pound flanges.

Valve ends shall be either flanged, tapping valve, mechanical joint, push-on joint or any combination thereof, as specified. All mechanical joint valves shall be supplied with glands, bolts, and gaskets. Valve body bolts and nuts shall meet the strength requirements of ASTM A307 with dimensions conforming to ANSI B18.2.1. The size of the bolt head shall be equal to the size of the nut and shall be stainless steel in accordance with ASTM 276.

C. MANUAL OPERATORS:

Unless specified otherwise, valves less than 12 inch size shall be provided with handwheels, and valves 12 inches and larger shall be provided with geared operators. All gate valves shall open right (clockwise), unless otherwise specified.

The gate valves shall be designed and constructed for installation in either a horizontal or vertical position. Valves designed for buried installation shall have a stem in the vertical position and shall be furnished for mounting in a horizontal pipeline, unless otherwise specified.

D. BYPASS:

Unless otherwise specified, gate valves 16 inches and larger, shall be provided with a bypass valve sized in accordance with AWWA C515.

2.03 PRODUCT DATA

The following information shall be provided in accordance with Section 01300:

1. Affidavits of compliance, as required by AWWA C515
2. Hydrostatic test results.

PART 3--EXECUTION

Gate valves shall be installed in the closed position.

END OF SECTION

SECTION 15103

BUTTERFLY VALVES

PART 1--GENERAL

1.01 DESCRIPTION

A. SCOPE:

This section specifies butterfly valves for air, gas, steam and water service.

1. TYPE A: Valves used in the following piping systems for sizes 3 inches and larger shall be designated Type A. Where 2 1/2-inch valves are specified, substitute Type B.

2. TYPE B: Valves used in the following piping systems shall be designated Type B:

3. TYPE C: Valves used in the following piping system shall be designated Type C:

4. TYPE D: Valves used in the following piping systems shall be designated Type D:

1.02 REFERENCES

This section contains references to the following documents. They are a part of this section as specified and modified. Where a referenced document contains references to other standards, those documents are included as references under this section as if referenced directly. In the event of conflict between the requirements of this section and those of the listed documents, the requirements of this section shall prevail.

Unless otherwise specified, references to documents shall mean the documents in effect at the time of Advertisement for Bids or Invitation to Bid (or on the effective date of the Agreement if there were no Bids). If referenced documents have been discontinued by the issuing organization, references to those documents shall mean the replacement documents issued or otherwise identified by that organization or, if there are no replacement documents, the last version of the document before it was discontinued. Where document dates are given in the following listing, references to those documents shall mean the specific document version associated with that date, regardless of whether the document has been superseded by a version with a later date, discontinued or replaced.

Reference	Title
ANSI B16.1	Cast Iron Pipe Flanges and Flanged Fittings Class 25, 125, 250 and 800
ANSI B16.5	Pipe Flanges and Flanged Fittings
ASTM A48	Gray Iron Castings
ASTM A108	Steel Bars, Carbon, Cold-Finished, Standard Quality
ASTM A126	Gray Iron Castings for Valves, Flanges, and Pipe Fittings
ASTM A216/A216M	Steel Castings, Carbon, Suitable for Fusion Welding, for High Temperature Service
ASTM A276	Stainless and Heat-Resisting Steel Bars and Shapes
ASTM A436	Austenitic Gray Iron Castings
ASTM A536	Ductile Iron Castings
AWWA C504	Rubber-Seated Butterfly Valves

PART 2--PRODUCTS

2.01 MATERIALS

A. TYPE A:

Type A valves are specified according to size as follows:

1. TYPE A, SIZE 3 THROUGH 24 INCHES: Type A valves from 3 through 24 inches in size shall be constructed of the following materials unless otherwise specified:

Component	Material
Shaft	Stainless steel, ASTM A276, Type 304 Carbon steel, ASTM A108, with stainless steel journals
Disc	Ductile iron, ASTM A536, or cast iron, ASTM A436, type 1 (Ni-Resist); or ASTM A48, Class 40, or ASTM A126, Class B

Component	Material
Seat mating surface	Stainless steel, ASTM A276, Type 304, mounted in body or on disc edge; or Ni-Chrome on the disc edge
Seat sealing surface	Neoprene, EPDM or Buna N
Body	Cast iron, ASTM A126, Class B

2. TYPE A, SIZE 30 THROUGH 72 INCHES: Type A valves from 30 through 72 inches in size shall be constructed of the following materials unless otherwise specified:

Component	Material
Shaft	Stainless steel, ASTM A276, Type 304
Disc	Ductile iron, ASTM A536, or cast iron, ASTM A48, Class 40
Seat mating surface	Stainless steel, ASTM A276, Type 304, mounted in body or on disc edge
Seat sealing surface	Neoprene, EPDM or Buna N
Body	Cast iron, ASTM A126, Class B

B. TYPE B:

Type B valves shall be constructed of the following materials unless otherwise specified:

Component	Material
Shaft	Stainless steel, ASTM A582, Type 416
Disc	Cast iron, ASTM A126, Class B
Seat sealing surface	Neoprene or Buna N--air and gas services Nordel--(high temp water)
Body	Cast iron, ASTM A126, Class B
Disc edge	Nickel

C. TYPE C:

Type C valves shall be constructed of the following materials:

Component	Material
Shaft	Stainless steel, ASTM A276, Type 316
Disc	Carbon steel, ASTM A216

Component	Material
Seat sealing surface	Teflon
Disc edge	Nickel
Body	Carbon steel, ASTM A216

D. TYPE D:

Type D valves shall be constructed of the following materials:

Component	Material
Shaft	Stainless steel, ASTM A276, Type 304
Disc	Polypropylene
Seat	EPT
Body	Rigid polyvinylchloride (PVC)

2.02 MANUFACTURE

A. GENERAL:

Valves shall be the stub or through shaft design. Wafer type valves are not acceptable for buried service. Unless otherwise specified, valve flange drilling shall be per ANSI B16.1, Class 125.

B. TYPE A:

Type A valves shall be designed in accordance with AWWA C504. Shafts shall be turned, ground and polished. Shaft dimensions and operator torque shall be chosen for the pressure specified in Section 15050 and Class B as specified in AWWA C504. When carbon steel shafts and stainless steel journals are used, static seals shall be provided to isolate the interior of the disc and the shaft from the process fluid.

Type A valves, size 3 through 72 inches, shall have seats that are vulcanized, bonded, mechanically secured, or clamped to the body or disc.

For Type A valves, size 30 through 72 inches, valve seats shall be field adjustable and field replaceable. Discs for valves shall be of the flow-through Type with a 360-degree seating design.

C. TYPE B:

Valves shall be rated at 175 psig and provide driptight shutoff up to the full valve rating on dead-end or isolation service. Seat shall be mechanically held in place and shall be field replaceable. Valve ends shall be as specified in Section 15050.

Type B valves, size 2 through 20 inches, shall have seats that are bonded to a rigid reinforcing ring.

Type B valves, size 24 through 36 inches, shall have adjustable seats bonded to a bronze or stainless steel retention ring that is held in place by Type 304 stainless steel retaining screws.

D. TYPE C (SIZE 2 THROUGH 20 INCHES):

Type C valves shall be high-pressure, high-temperature, corrosion-resistant valves capable of providing driptight shutoff to 225 psig and operating at 300 degrees F temperature. Valves shall be wafer or single-flange lugged design compatible for use with flanges to ANSI B16.5, Class 150.

Type C valves shall have seats that are pressure energized to assure positive shutoff. Seat shall seal effectively with flow in either direction.

E. TYPE D:

Valves shall have a molded PVC body. The disc shall be polypropylene with an encapsulated metal reinforcing insert. The liner shall be neoprene which serves as the flange gasket.

2.03 MANUAL OPERATORS

A. GENERAL:

Manual operators shall be designed in accordance with AWWA C504 and shall have a disc position indicator designating the opened and closed position of the valve.

B. TYPE A:

Manual operators for Type A valves shall be of the traveling nut, rack and pinion, or worm gear type. Operators shall be equipped with adjustable mechanical stop-limiting devices to prevent overtravel of the disc in the open and closed positions and shall be self-locking and designed to hold the valve in any intermediate position between full open and full closed. Valve operator components shall withstand an input torque of 300 ft-lbs at the extreme operator positions without damage.

Operator for buried service shall include an AWWA operating nut and shall be gasketed and grease packed for submerged operation at water pressures to 10 psig. Operators for exposed service shall include a handwheel and be gasketed for weatherproof service.

C. TYPES B, C, AND D:

Operators for Type B, Type C, and Type D valves 6 inches in diameter and smaller shall be latch lock levers. Valves shall be capable of being locked in at least five intermediate positions between fully open and fully closed.

Operators for Type B and Type C valves 8 inches in diameter and larger shall be the traveling nut or worm gear Type. Operators for exposed service shall be gasketed for

weatherproof service. A handwheel or chain wheel shall be provided for each operator as required in Section 15184.

2.04 PRODUCT DATA

Affidavits of compliance with AWWA C504 for Type A valves shall be provided in accordance with Section 01300.

PART 3--EXECUTION

Valves shall be installed in accordance with the manufacturer's recommendations.

END OF SECTION

SECTION 15110

ECCENTRIC PLUG VALVES

PART 1--GENERAL

1.01 DESCRIPTION

This section specifies eccentric plug valves.

1.02 QUALITY ASSURANCE

A. REFERENCES:

This section contains references to the following documents. They are a part of this section as specified and modified. Where a referenced document contains references to other standards, those documents are included as references under this section as if referenced directly. In the event of conflict between the requirements of this section and those of the listed documents, the requirements of this section shall prevail.

Unless otherwise specified, references to documents shall mean the documents in effect at the time of Advertisement for Bids or Invitation to Bid (or on the effective date of the Agreement if there were no Bids). If referenced documents have been discontinued by the issuing organization, references to those documents shall mean the replacement documents issued or otherwise identified by that organization or, if there are no replacement documents, the last version of the document before it was discontinued. Where document dates are given in the following listing, references to those documents shall mean the specific document version associated with that date, regardless of whether the document has been superseded by a version with a later date, discontinued or replaced.

Reference	Title
ANSI B16.1	Cast Iron Pipe Flanges and Flanged Fittings Class 25, 125, 250, and 800
ASTM A126	Gray Iron Castings for Valves, Flanges, and Pipe Fittings
ASTM A276	Stainless and Heat-Resisting Steel Bars and Shapes
ASTM A436	Austenitic Gray Iron Castings
ASTM A536	Ductile Iron Castings
AWWA C504	Rubber Seated Butterfly Valves

B. PROOF OF DESIGN TESTS:

The Contractor shall furnish the Engineer three certified copies of a report from an independent testing laboratory certifying successful completion of proof-of-design testing conducted in accordance with AWWA C504, Section 5.2, except that where the word "disc" appears in the standard, it is understood to mean "plug." In lieu of testing the valves at an independent testing laboratory, proof-of-design testing may be performed at the valve manufacturer's laboratory, but must be witnessed by a representative of a qualified independent testing laboratory, and all test reports must be certified by the laboratory representative. Proof-of-design testing shall have been performed on not less than three 6-inch-diameter valves, with all three test units demonstrating full compliance with the test standards. Failure to satisfactorily complete the test shall be deemed sufficient evidence to reject all valves of the proposed make or manufacturer's model number.

PART 2--PRODUCTS

2.01 MATERIALS

Materials of construction shall be as follows:

Component	Material
Body	Cast iron, ASTM A126, Class B
Plug	Cast iron, ASTM A126, Class B, or cast iron ASTM A436 (Ni-resist), or ductile iron, ASTM A536
Plug facing	Neoprene or Buna-N
Body seats	
Less than 3 inches	Cast iron, ASTM A126, Class B
3 inches and larger	Stainless steel, ASTM A276, Type 304 or nickel
Packing	Buna V-flex or TFE

Materials specified are considered the minimum acceptable for the purposes of durability, strength, and resistance to erosion and corrosion. The Contractor may propose alternative materials for the purpose of providing greater strength or to meet required stress limitations. However, alternative materials must provide at least the same qualities as those specified for the purpose.

Candidate manufacturers include DeZurik, Val-matic or approved equal.

2.02 MANUFACTURE

A. GENERAL:

Valves shall be straight-flow non-lubricated resilient plug type suitable for drip-tight, bi-directional shutoff at the specified valve design pressure. Port areas for the valve shall be at least 80 percent of the adjacent full pipe area and shall be capable of passing solids 80% of pipe size.

Valve body seats consisting of nickel for valves 3 inches and larger shall be constructed of a welded-in overlay of not less than 90 percent pure nickel. Upper and lower journal bearings shall be replaceable, sleeve-type, corrosion resistant, and permanently lubricated. Packing shall be self-adjusting chevron type replaceable without disassembling the valve.

Unless otherwise specified, valves shall, as a minimum, conform to the following pressure ratings:

Size, inches	Design pressure, psig
12 and smaller	175
14 through 36	150
42 through 54	125

B. END CONNECTIONS:

Valves 3 inches and smaller shall have threaded ends. Valve flange drilling for valves larger than 3 inches shall be per ANSI B16.1, Class 125. Grooved-end valves may be provided with grooved-end piping systems.

C. MANUAL OPERATORS:

Unless otherwise specified, valves 4 inches and smaller shall be provided with a lever type manual operator. Valves larger than 4 inches shall be provided with totally enclosed worm gear operators. Where specified, manual operators shall have an adjustable stop. All operator components shall be sized for the valve design pressure in accordance with AWWA C504, Section 4.5. Operators shall comply with applicable portions of Section 15184.

2.03 PRODUCT DATA

The following information shall be provided in accordance with Section 01300:

1. Manufacturer's product data.
2. Proof-of-design test reports specified in paragraph 15110-1.02 B.

PART 3--EXECUTION

Unless otherwise specified, valves shall be provided with the seat downstream away from flow. Valves at tank connections shall be installed with seat away from tank. Valves on pump discharge lines shall be installed with seat adjacent to the pump. Valves shall be installed with the shaft in the horizontal position such that plug rotates ‘upwards’ to open the valve.

END OF SECTION

SECTION 15118

SWING CHECK VALVES

PART 1—GENERAL

1.01 DESCRIPTION

This section specifies weight-and-lever type swing check valves.

1.02 REFERENCES

This section contains references to the following documents. They are a part of this section as specified and modified. Where a referenced document contains references to other standards, those documents are included as references under this section as if referenced directly. In the event of conflict between the requirements of this section and those of the listed documents, the requirements of this section shall prevail.

Unless otherwise specified, references to documents shall mean the documents in effect at the time of Advertisement for Bids or Invitation to Bid (or on the effective date of the Agreement if there were no Bids). If referenced documents have been discontinued by the issuing organization, references to those documents shall mean the replacement documents issued or otherwise identified by that organization or, if there are no replacement documents, the last version of the document before it was discontinued. Where document dates are given in the following listing, references to those documents shall mean the specific document version associated with that date, regardless of whether the document has been superseded by a version with a later date, discontinued or replaced.

Reference	Title
ASTM A126	Gray Iron Castings for Valves, Flanges, and Pipe Fittings
ASTM A276	Stainless and Heat-Resisting Steel Bars and Shapes
ASTM A536	Ductile Iron Castings
ASTM B148	Aluminum-Bronze Sand Castings
AWWA C508	Swing-Check Valves for Waterworks Service, 2 In. Through 24 In. NPS

PART 2--PRODUCTS

2.01 MANUFACTURERS

The Owner and Engineer believe the following candidate manufacturers are capable of producing equipment and/or products that will satisfy the requirements of this Section. This statement, however, shall not be construed as an endorsement of a particular manufacturer's products, nor shall it be construed that named manufacturers' standard equipment or products will comply with the requirements of this Section. Candidate manufacturers include Golden Anderson and APCO, or equal.

2.02 MATERIALS

Materials of construction shall be as follows:

Component	Material
Body, cover	Cast iron, ASTM A126, Class B
Disc	Ductile iron, ASTM A536
Seat rings	Aluminum bronze, ASTM B148 or Stainless steel, ASTM A276, Type 316
Hinge shafts and hinge pins	Stainless steel, ASTM A276, Type 301 or 304
Shaft bushings	Bronze, AWWA C508

Materials specified are considered the minimum acceptable for the purposes of durability, strength, and resistance to erosion and corrosion. The Contractor may propose alternative materials for the purpose of providing greater strength or to meet required stress limitations. However, alternative materials must provide at least the same qualities as those specified for the purpose.

2.03 MANUFACTURE

Disc, disc arm, shaft, keyways, lever and weight shall be capable of closing within .05 seconds of pump stoppage and fluid moving at velocity of 8 feet per second. Weight position along arm shall be adjustable. The valve design shall permit mounting levers and weights on either side of the valve.

Valves shall be provided with a clear opening equal to or greater than the connecting piping, with no raised seating surface. Seats shall be threaded onto the body or fitted with an O-ring seal and locked in place with stainless steel screws or pins and shall be replaceable. Shafts shall be provided with stuffing box and packing or O-ring seals at each end. Seals shall be externally replaceable. Minimum shaft diameters shall be as follows:

Valve Inlet Connection Size, inches	Shaft diameter, inches
3	0.75
4	0.825
6	1.0
8	1.75
10	2.0
12	2.5
14	2.75
16	3.25

The pivot arm shall be secured to the disc with either twin bolted connections with lockwashers or a pinned nut. In either instance, the connection shall be designed to prevent disc movement relative to the arm. Shaft bearings shall extend the entire length of the shaft other than the section required for the disc arm attachment. Disc and lever arms shall be keyed to the shaft and retained by bushings or pins.

Unless otherwise specified, valves shall, as a minimum, conform to the following pressure ratings:

Size, inches	Working pressure, pressure, psig	Hydrostatic test
2 through 12	175	350
14 and larger	150	300

Check valves wetted parts shall be coated with fusion bonded epoxy.

Dampening devices of any kind shall not be accepted.

2.04 PRODUCT DATA

Manufacturer's catalog information including dimensions, cross-sectional views, details of construction and materials list shall be provided in accordance with Section 01300.

PART 3--EXECUTION

Spring loaded swing check valves shall be installed in accordance with the manufacturer's recommendations.

END OF SECTION

SECTION 15119

DOUBLE DISC CHECK VALVES

PART 1--GENERAL

1.01 DESCRIPTION

This section specifies double disc check valves of the center pivot, double disc, spring type. The valve shall fit as a wafer between piping flanges.

1.02 REFERENCES

This section contains references to the following documents. They are a part of this section as specified and modified. Where a referenced document contains references to other standards, those documents are included as references under this section as if referenced directly. In the event of conflict between the requirements of this section and those of the listed documents, the requirements of this section shall prevail.

Unless otherwise specified, references to documents shall mean the documents in effect at the time of Advertisement for Bids or Invitation to Bid (or on the effective date of the Agreement if there were no Bids). If referenced documents have been discontinued by the issuing organization, references to those documents shall mean the replacement documents issued or otherwise identified by that organization or, if there are no replacement documents, the last version of the document before it was discontinued. Where document dates are given in the following listing, references to those documents shall mean the specific document version associated with that date, regardless of whether the document has been superseded by a version with a later date, discontinued or replaced.

Reference	Title
ASTM A126	Gray Iron Castings for Valves, Flanges, and Pipe Fittings
ASTM A276	Stainless and Heat-Resisting Steel Bars and Shapes
ASTM A278	Gray Iron Castings for Pressure Containing Parts for Temperatures up to 650 Degrees F
ASTM A351/A351M	Steel Castings, Austenitic for High-Temperature Service

PART 2--PRODUCTS

2.01 ACCEPTABLE PRODUCTS

Valves shall be APCO Series 9000, Stockham Duo-Chek II, Gulf Valve Model MB, or equal, modified to provide the specified features.

2.02 MATERIALS

Materials of construction shall be as follows:

Component	Material
Body	Cast iron, ASTM A126, Cl. B, or ASTM A278, Cl. 40
Disc	Aluminum Bronze or Stainless Steel, ASTM A351, Type 316
Seal	Buna-N
Spring, hinge pin and stop pin	Stainless steel, ASTM A276, Type 316

Materials specified are considered the minimum acceptable for the purposes of durability, strength, and resistance to erosion and corrosion. The Contractor may propose alternative materials for the purpose of providing greater strength or to meet required stress limitations. However, alternative materials must provide at least the same qualities as those specified for the purpose.

2.03 MANUFACTURE

The check valve discs shall be spring-loaded and normally closed by means of one or more torsion springs. Unless otherwise specified, discs or plates shall be aluminum bronze. Discs on valves used for sludge gas (Piping System 4) shall be stainless steel. End connections shall be flat or plain faced. Seating shall be resilient and watertight.

Unless otherwise specified, valves shall, as a minimum, conform to the following pressure ratings:

Working pressure, psig	Hydrostatic test pressure, psig
175	300

2.04 PRODUCT DATA

Manufacturer's product data shall be provided in accordance with Section 01300.

PART 3--EXECUTION

Double disc check valves shall be installed in accordance with the manufacturer's recommendations.

END OF SECTION

SECTION 15147

SOLENOID VALVES

PART 1--GENERAL

1.01 DESCRIPTION

A. SCOPE:

This section specifies 2- and 3-way solenoid valves, direct or pilot operated type, for control of process fluids. Valves for air cylinder pilot duty are specified in Section 15185.

B. TYPE:

Valves with piping connections less than 1-1/2 inches in diameter shall be direct-acting type.

Valves with piping connections 1-1/2 inches in diameter and greater shall be pilot operated globe body type.

C. DESIGN REQUIREMENTS:

Unless otherwise specified, solenoid valves shall be designed to seal or unseal the pressurized (supply) port upon the action specified in the paragraph 1.03, Solenoid Valve Schedule.

Valves shall be listed by Underwriters Laboratories Inc. in accordance with UL 429 and UL 1002. Solenoid valves for gas service shall be approved by Factory Mutual Engineering Corporation. The minimum acceptable operating pressure differential for pilot operated valves shall be 5 psi.

1.02 REFERENCES

This section contains references to the following documents. They are a part of this section as specified and modified. Where a referenced document contains references to other standards, those documents are included as references under this section as if referenced directly. In the event of conflict between the requirements of this section and those of the listed documents, the requirements of this section shall prevail.

Unless otherwise specified, references to documents shall mean the documents in effect at the time of Advertisement for Bids or Invitation to Bid (or on the effective date of the Agreement if there were no Bids). If referenced documents have been discontinued by the issuing organization, references to those documents shall mean the replacement documents issued or otherwise identified by that organization or, if there are no replacement documents, the last version of the document before it was discontinued. Where document dates are given in the following listing, references to those documents shall mean the specific document version associated with that date, regardless of whether the document has been superseded by a

version with a later date, discontinued or replaced.

Reference	Title
ASTM A48	Gray Iron Castings
UL 429	Electrically Operated Valves
UL 1002	Electrically Operated Valves for Use in Hazardous Locations, Class I, Groups A, B, C, and D, and Class II, Groups E, F, and G

PART 2--PRODUCTS

2.01 MANUFACTURERS

The Owner and Engineer believe the following candidate manufacturers are capable of producing equipment and/or products that will satisfy the requirements of this Section. This statement, however, shall not be construed as an endorsement of a particular manufacturer's products, nor shall it be construed that named manufacturers' standard equipment or products will comply with the requirements of this Section.

A. DIRECT ACTING TYPE:

Candidate manufacturers include:

1. Automatic Switch Company (ASCO)
2. Honeywell-Skinner
3. or equal

B. PILOT TYPE:

Candidate manufacturers include:

1. Cla-Val Co.
2. Golden Anderson
3. or equal

2.02 MATERIALS

A. DIRECT ACTING TYPE:

Materials of construction shall be as follows:

Component	Material
Body	Brass or stainless steel, Type 304
Seal	Teflon or Buna-N
Disc	Teflon or Buna-N

B. PILOT TYPE:

Materials of construction shall be as follows:

Component	Material
Main valve body	Cast iron, ASTM A48
Pilot control body	Brass

2.03 EQUIPMENT

A. GENERAL:

Solenoid valves shall be rated for continuous duty at 24 volts DC or 120 volts AC as indicated. Valves shall be threaded for sizes 2-inch and smaller and flanged for sizes 2-1/2 inch and larger.

B. DIRECT ACTING TYPE AND PILOT TYPE:

Solenoid valves shall be suitable for the area location and usages as indicated in the schedule with fully encapsulated Class H coils. Enclosure type:

1. NEMA 1 general purpose, molded epoxy construction
2. NEMA 4X watertight / dust tight / corrosion resistant
3. NEMA 6P submersible
4. NEMA 7 explosionproof

Unspecified solenoid valves enclosures shall be NEMA 4X.

2.04 PRODUCT DATA

Manufacturer's product data shall be provided in accordance with Section 01300.

PART 3--EXECUTION

Solenoid valves shall be installed in accordance with the manufacturer's recommendations.

END OF SECTION

SECTION 15150

SPECIALTY VALVES

PART 1--GENERAL

1.01 DESCRIPTION

This section specifies specialty valves which are auxiliary to process piping systems.

1.02 REFERENCES

This section contains references to the following documents. They are a part of this section as specified and modified. Where a referenced document contains references to other standards, those documents are included as references under this section as if referenced directly. In the event of conflict between the requirements of this section and those of the listed documents, the requirements of this section shall prevail.

Unless otherwise specified, references to documents shall mean the documents in effect at the time of Advertisement for Bids or Invitation to Bid (or on the effective date of the Agreement if there were no Bids). If referenced documents have been discontinued by the issuing organization, references to those documents shall mean the replacement documents issued or otherwise identified by that organization or, if there are no replacement documents, the last version of the document before it was discontinued. Where document dates are given in the following listing, references to those documents shall mean the specific document version associated with that date, regardless of whether the document has been superseded by a version with a later date, discontinued or replaced.

Reference	Title
ASME SEC VIII D2	Boiler and Pressure Vessel Code, Pressure Relief Devices
ASTM A126	Gray Iron Castings for Valves, Flanges, and Pipe Fittings

PART 2--PRODUCTS

2.01 SHEAR GATES

Shear gates shall be provided with a lift handle of sufficient length to permit operation from the operating levels specified. Shear gates shall be iron body with bronze seat and disc rings. Shear gates shall be Clow F-3000 or Waterman C-16.

2.02 FLAP GATES

Flap gates shall be heavy-duty, double-hinge type. Body and cover shall be cast iron conforming to ASTM A126, Class B. The body shall be provided with a resilient neoprene seat bonded in a groove machined in the body. The seal shall provide positive shutoff. The cover shall

have a phosphor bronze seat facing, securely mounted in a dovetail groove around the periphery of the gate opening. Upper pivot shall be adjustable for gate sensitivity, and lower pivot shall incorporate a provision to align the cover. Gate design shall prevent cover from wedging into gate opening. Lubrication fittings shall be provided for each pivot.

Unless otherwise specified, wall thimbles shall be minimum 8-inch deep F-section, formed of ASTM A126, Class B cast iron with the gate mounting face machined flat to form a true bearing surface.

Thimble opening shall be the same as the gate size specified on the drawings. All anchor bolts shall be hot-dip galvanized. Fasteners and bushings shall be naval bronze.

Flap gates shall be Rodney Hunt Series FV-AC or FV-ACP or Waterman F-55.

2.03 MUD VALVES

Unless otherwise specified, mud valves shall be iron body, bronze mounted, flange type with nonrising stems. Stems shall be bronze with steel extension shafts where indicated. Operating nuts shall be enclosed in floor boxes or mounted on angle supports as specified and shall be suitable for operation with T-handle wrenches provided with the valves. Operating nuts shall be AWWA standard size. Mud valves shall be Clow F-3080 or Waterman MV-11.

2.04 PRESSURE RELIEF VALVES

Pressure relief valves for air shall be ASME certified, Watts Fig 41A, Lonergan L14/L40 Series, or equal. Size and pressure settings shall be as specified or as required for the service intended. Pressure relief valves for cold and hot water shall be McDonnell and Miller 230, Watts 174A, Cash Acme F-82 or Lonergan L14/L40 Series.

2.05 COMBINATION TEMPERATURE-PRESSURE RELIEF VALVES

Combination temperature-pressure relief valves for use with boilers and hot water storage tanks shall be ASME certified and rated.

Valves shall be provided with a safety relief testing lever. Connections shall be threaded type.

Valves shall be Watts 40-140-N240-340 series or Cash Type NCLX.

2.06 HOSE VALVES

Unless specified otherwise, hose valves shall be a brass ball valve, Jamesbury Fig. 351 or Nibco T-580, with brass male cam-and-groove quick disconnect adapter for hose connection.

2.07 FLUSHING COCKS

Flushing cocks shall consist of a DeZurik 159/118-S or Keystone Fig 541, neoprene-faced eccentric plug valve with a hose nipple adapter if required. Unless specified otherwise, flushing cocks shall be 1 inch in diameter.

2.08 QUICK DISCONNECTS

Quick disconnects shall not be disconnectable under pressure. Quick disconnects for air service shall be Swagelok or Tomco and shall be 1/2 inch, unless otherwise specified. Quick disconnects for water service shall be EverTite Part B, Gate Part B, or equal, and shall be 1 inch, unless specified otherwise.

2.09 STOP AND DRAIN VALVES

Stop and drain valves shall be Mueller H-10284.

2.10 SURGE RELIEF VALVE

A. CONSTRUCTION:

Surge Relief Valve shall consist of a main valve assembly and a pilot control system, completely assembled and tested as a unit and ready for field installation.

B. MAIN VALVE:

1. Main valve body shall be angle style of high strength cast iron conforming to ASTM A126 Class B with integral flanges, faced and drilled per ANSI B16.1 Class 250 or cast ductile iron conforming to ASTM A536 with integral flanges, faced and drilled per ANSI B16.42 Class 300. The valve shall be "full-ported" with a flow area through the valve no less than the area of its nominal pipe size when the valve is fully open.

2. The main valve shall operate on the differential piston principle. There shall be no diaphragms or springs in the main valve.

3. The valve piston shall be guided on its outside diameter by long stationary vee-ports located downstream of the seat to minimize throttling. All throttling shall be by the vee-ports and not by the seat itself.

4. The valve shall be fully capable of operating in any position without the need of springs and shall not incorporate stems, stem guides or spokes in the waterway.

C. VALVE:

Surge valves shall be GA Industries, Inc., Figure Number 6600-D angle body.

2.11 PRODUCT DATA

Manufacturer's product data shall be provided in accordance with Section 01300.

PART 3--EXECUTION

Specialty valves shall be installed in accordance with the manufacturer's recommendations.

END OF SECTION

SECTION 15151

AIR RELEASE AND VACUUM VALVES FOR WASTEWATER APPLICATIONS

PART 1--GENERAL

1.01 DESCRIPTION

A. SCOPE:

This section specifies air release and vacuum relief valves for wastewater service. All valves specified under this section shall be designed to be located outdoors at a municipal wastewater treatment facility and shall be subject to the environmental conditions specified in Section 01800.

B. TYPES:

Wastewater air release (ARV) and combination air release and vacuum relief valves (CARV) shall have a small venting orifice to vent the accumulation of air and other gases with the line or system under pressure. Combination valves shall have air venting capability and be capable of opening quickly to relieve a negative pressure in the pipeline. Size and capacity shall be as specified.

1.02 REFERENCES

This section contains references to the following documents. They are a part of this section as specified and modified. Where a referenced document contains references to other standards, those documents are included as references under this section as if referenced directly. In the event of conflict between the requirements of this section and those of the listed documents, the requirements of this section shall prevail.

Unless otherwise specified, references to documents shall mean the documents in effect at the time of Advertisement for Bids or Invitation to Bid (or on the effective date of the Agreement if there were no Bids). If referenced documents have been discontinued by the issuing organization, references to those documents shall mean the replacement documents issued or otherwise identified by that organization or, if there are no replacement documents, the last version of the document before it was discontinued. Where document dates are given in the following listing, references to those documents shall mean the specific document version associated with that date, regardless of whether the document has been superseded by a version with a later date, discontinued or replaced.

Reference	Title
ASTM A240	Heat-Resisting Chromium and Chromium Nickel Stainless Steel Plate, Sheet, and Strip for Pressure Vessels

Reference	Title
ASTM A351/A351M	Castings, Austenitic, Austenitic-Ferritic (Duplex), for Pressure-Containing Parts
ASTM A743/A743M	Castings, Iron-Chromium, Iron-Chromium-Nickel, Corrosion Resistant, for General Application
ASTM A744/A744M	Casting, Iron-Chromium-Nickel, Corrosion Resistant, for Severe Service
ASTM A747/747M	Steel Castings, Stainless, Precipitation Hardening

1.03 SUBMITTALS

The following submittals shall be provided in accordance with Section 01300:

2. A copy of this specification section, with addendum updates included, and all referenced and applicable sections, with addendum updates included, with each paragraph check-marked to indicate specification compliance or marked to indicate requested deviations from specification requirements. Check marks (✓) shall denote full compliance with a paragraph as a whole. If deviations from the specifications are indicated, and therefore requested by the Contractor, each deviation shall be underlined and denoted by a number in the margin to the right of the identified paragraph, referenced to a detailed written explanation of the reasons for requesting the deviation. The Engineer shall be the final authority for determining acceptability of requested deviations. The remaining portions of the paragraph not underlined will signify compliance on the part of the Contractor with the specifications. Failure to include a copy of the marked-up specification sections, along with justification(s) for any requested deviations to the specification requirements, with the submittal shall be sufficient cause for rejection of the entire submittal with no further consideration.

3. Manufacturer's catalog information including dimensions, cross-sectional views, details of construction, list of materials and other data confirming conformance to specified requirements.

4. Installation requirements, showing clearances required for maintenance purposes.

5. Applicable O&M instructions per Section 01730.

PART 2--PRODUCTS

2.01 ACCEPTABLE PRODUCTS

The Owner and Engineer believe the following manufacturer is capable of producing equipment and products, which will satisfy the requirements of this Section. This statement,

however, shall not be construed as an endorsement of a particular manufacturer's product, nor shall it be construed that a named manufacturer's standard product will comply with the requirements of this Section. Manufacturer for wastewater air release valves (ARVs) and for combination air release and vacuum relief valves (CARVs) shall be Vent-O-Mat. Valves shall be sized as shown on the Drawings or otherwise recommended by the valve manufacturer.

2.02 MATERIALS

Component	Material
Body, cover and float	Cast stainless steel, Type 316, ASTM A351, ASTM A743, ASTM A744 OR ASTM A747
Seat	Buna-N or Type 316 SS
Trim	Type 316 SS, ASTM A240

Materials specified are considered the minimum acceptable for the purposes of durability, strength, and resistance to erosion and corrosion. The Contractor may propose alternative materials for the purpose of providing greater strength or to meet required stress limitations. However, alternative materials must provide at least the same qualities as those specified for the purpose.

2.03 CONSTRUCTION

A. GENERAL:

The air release valve shall be designed to provide two-stage air venting when the pipeline is filling or air has accumulated in the body of the valve. The first stage shall vent the pipeline rapidly as pressure is applied to the pipeline. The second stage shall have a slow closing feature to prevent development of damaging transient forces. The assembly shall be specifically designed for pump applications conveying unscreened wastewater. A third stage shall provide for intermittent venting of accumulated air at pressures greater than atmospheric.

The combination valve shall be designed to react immediately to open when the absolute pressure in the pipeline falls below the atmospheric pressure by opening the large orifice. In addition, the valve shall be designed to provide two-stage air venting when the pressure in the pipeline exceeds atmospheric pressure. The first stage shall vent the pipeline rapidly as pressure is applied to the pipeline. The second stage shall have a slow closing feature to prevent development of damaging transient forces. The assembly shall be specifically designed for pump applications conveying unscreened wastewater. A third stage shall provide for intermittent venting of accumulated air at pressures greater than atmospheric. Designs using linkage, levers and pilot devices will not be accepted.

B. BODY:

The air release valves (ARV) and the combination air release and vacuum relief valve (CARV) shall be of similar design and construction and consist of a fabricated or cast tubular or conical shaped body containing a hollow direct acting float and a solid direct acting float. The

body shall be constructed to prevent distortion, deformation, leakage or damage to seats and internal mechanisms at an internal pressure equal to 150 percent of the assembly's nominal working pressure rating. The assembly shall be rated for 150 psig and shall have an inlet end suitable for connection to the pipeline specified. The CARV shall be specifically designed and constructed to provide quick opening performance on negative pressure in the pipeline.

C. ORIFICES AND SEALING MECHANISMS:

Two orifices shall be provided. The large venting orifice shall be not less than the nominal diameter of the connecting pipe and shall be sealed by the flat face of the assembly's large float. The second sealing face shall be provided with a land to prevent damage to the resilient seating material. The second orifice shall be a variable closure orifice actuated by a float to slowly vent the remaining air and prevent excessive pipeline pressure. Valves with linkage type actuators will not be allowed.

2.04 SPARE VALVES

One spare valve shall be provided for each size and type of valve specified or shown on the drawings.

PART 3--EXECUTION

Wastewater combination valves shall be installed in accordance with the manufacturer's recommendations. Unless indicated otherwise on the drawings, isolation valves per Section 15050 shall be provided below each air valve.

END OF SECTION

SECTION 15152

PRESSURE RELIEF VALVES FOR STRUCTURES

PART 1--GENERAL

1.01 DESCRIPTION

Pressure relief valves specified in this section shall be the type designed to limit the uplift pressure of groundwater on tanks and other structures.

1.02 REFERENCES

This section contains references to the following documents. They are a part of this section as specified and modified. Where a referenced document contains references to other standards, those documents are included as references under this section as if referenced directly. In the event of conflict between the requirements of this section and those of the listed documents, the requirements of this section shall prevail.

Unless otherwise specified, references to documents shall mean the documents in effect at the time of Advertisement for Bids or Invitation to Bid (or on the effective date of the Agreement if there were no Bids). If referenced documents have been discontinued by the issuing organization, references to those documents shall mean the replacement documents issued or otherwise identified by that organization or, if there are no replacement documents, the last version of the document before it was discontinued. Where document dates are given in the following listing, references to those documents shall mean the specific document version associated with that date, regardless of whether the document has been superseded by a version with a later date, discontinued or replaced.

Reference	Title
ASTM D2000	Classification System for Rubber Products in Automotive Applications

1.03 PERFORMANCE DURING TESTING OF STRUCTURES

The valves specified in this section are expected to leak. During hydrostatic testing of structures, after evaluating the status and effect of groundwater conditions during the proposed test, the Contractor may seal the valves for the duration of the test. They shall be in a clean, like new condition when the contract is accepted.

PART 2--PRODUCTS

2.01 GENERAL

Pressure relief valves for structures shall be similar to James B. Clow and Sons No. F 1492, Coldwell-Wilcox Type A or Neenah Foundry Company No. R-5000 Type C, except that the valves shall be provided with replaceable neoprene gaskets cemented to both the cover and body seats. Each valve shall be tested before shipment.

2.02 MATERIALS

Materials of construction shall be as follows:

Component	Material
Cover and valve body	Cast iron
Gasket	Neoprene, ASTM D2000, CA410

Materials specified are considered the minimum acceptable for the purposes of durability, strength, and resistance to erosion and corrosion. The Contractor may propose alternative materials for the purpose of providing greater strength or to meet required stress limitations. However, alternative materials must provide at least the same qualities as those specified for the purpose.

2.03 SPARE PARTS

Provide five sets of gaskets and required amount of bonding material.

PART 3--EXECUTION

3.01 INSTALLATION

Pressure relief valves shall be installed in accordance with the manufacturer's recommendations.

3.02 CLEANING AND TESTING

Prior to start-up and commissioning, the Contractor shall, for each valve, clean both seats and the screen and raise and lower the cover to demonstrate it is free to operate.

END OF SECTION

SECTION 15153

PRESSURE REGULATING VALVES

PART 1--GENERAL

1.01 DESCRIPTION

This section specifies direct acting and pilot controlled pressure regulating valves for air, water and gas service.

1.02 QUALITY ASSURANCE

A. REFERENCES:

This section contains references to the following documents. They are a part of this section as specified and modified. Where a referenced document contains references to other standards, those documents are included as references under this section as if referenced directly. In the event of conflict between the requirements of this section and those of the listed documents, the requirements of this section shall prevail.

Unless otherwise specified, references to documents shall mean the documents in effect at the time of Advertisement for Bids or Invitation to Bid (or on the effective date of the Agreement if there were no Bids). If referenced documents have been discontinued by the issuing organization, references to those documents shall mean the replacement documents issued or otherwise identified by that organization or, if there are no replacement documents, the last version of the document before it was discontinued. Where document dates are given in the following listing, references to those documents shall mean the specific document version associated with that date, regardless of whether the document has been superseded by a version with a later date, discontinued or replaced.

Reference	Title
ANSI B16.5	Pipe Flanges and Flanged Fittings

B. PERFORMANCE:

Direct acting type pressure regulating valves shall control the discharge pressure within ±5 percent of set pressure.

Pilot controlled type pressure regulating valves shall maintain the set discharge pressure regardless of fluctuations in inlet pressure.

C. TESTING:

Hydrostatic tests shall be conducted by the manufacturer for one valve of each type supplied for a particular service. Steel-bodied valves shall be hydrostatically tested in accordance with the requirements of ANSI B16.5. Aluminum-, bronze-, and brass-bodied valves shall be

hydrostatically tested at double the MAX pressure specified. Leakage, sweating or visible deformation at any point on the valve shall be cause for rejection of valves of that type and manufacture.

PART 2--PRODUCTS

2.01 ACCEPTABLE PRODUCTS

A. GENERAL:

Pressure regulating valves shall be flanged or threaded connections as specified. Moving parts requiring lubrication shall have means provided for lubrication and shall be lubricated prior to delivery.

B. WATER SERVICE:

Valves less than 1-1/4 inches shall be direct acting, spring-operated type. Valves less than 1-1/4 inches shall be Cash-Acme E-41 Series 3 or Watts 223 with separate Y-pattern strainer.

Valves 1-1/4 inches and larger shall be pilot-controlled type, unless otherwise specified. Valves 1-1/4 inches and larger shall be diaphragm actuated type or differential piston pressure type and shall be Cla-Val Co. Clayton 90-01 Series or GA Industries, Inc. Valves 1-1/4 inches and larger for 3W service shall be provided with separate Y pattern strainer.

C. AIR SERVICE:

Valves for air service shall be Cash-Acme E-41 Series 3 or Watts 152A with separate Y-pattern strainer.

D. GAS SERVICE:

Valves for gas service shall conform to all AGA regulations and criteria. Valves shall be sized as recommended by the manufacturer for the intended use. Pressure regulating valves for gas shall be Fisher or Kieley and Mueller.

2.02 PRODUCT DATA

The following information shall be provided in accordance with Section 01300:

1. Manufacturer's product data.
2. Hydrostatic test results.

PART 3--EXECUTION

Pressure regulating valves shall be installed in accordance with the manufacturer's recommendations.

END OF SECTION

SECTION 15184

MANUAL VALVE AND GATE OPERATORS AND OPERATOR APPURTENANCES

PART 1--GENERAL

1.01 DESCRIPTION

This section specifies manual operators for valves and gates, and operator appurtenances.

1.02 REFERENCES

This section contains references to the following documents. They are a part of this section as specified and modified. Where a referenced document contains references to other standards, those documents are included as references under this section as if referenced directly. In the event of conflict between the requirements of this section and those of the listed documents, the requirements of this section shall prevail.

Unless otherwise specified, references to documents shall mean the documents in effect at the time of Advertisement for Bids or Invitation to Bid (or on the effective date of the Agreement if there were no Bids). If referenced documents have been discontinued by the issuing organization, references to those documents shall mean the replacement documents issued or otherwise identified by that organization or, if there are no replacement documents, the last version of the document before it was discontinued. Where document dates are given in the following listing, references to those documents shall mean the specific document version associated with that date, regardless of whether the document has been superseded by a version with a later date, discontinued or replaced.

Reference	Title
AWWA C500	Gate Valves 3 through 48 inch NPS, for Water and Sewage Systems

PART 2--PRODUCTS

2.01 GENERAL

Except as specified in valve and gate specification sections, manual operators shall be as specified herein. Operators shall be mounted on the valve or gate and provided as a unit. Each valve body or operator shall have cast thereon the word "OPEN," an arrow indicating the direction to open, and flow direction arrows.

2.02 OPERATORS

A. GENERAL:

Manual operators shall have operating torques less than 80 foot-pounds. Unless specified otherwise, each manual operator shall be provided with an operating wheel. Unless specified otherwise, the direction of rotation of the operator shall be counterclockwise for opening.

B. WRENCH NUTS:

Wrench nuts shall comply with Section 3.15 of AWWA C500. A minimum of two operating keys, but no less than one key per every ten valves, shall be provided for operation of the wrench nut operated valves.

C. CHAIN WHEELS:

Chain wheels shall be ductile iron. Operating chains shall be galvanized.

2.03 OPERATOR APPURTENANCES

A. VALVE BOXES:

Valve boxes shall be cast iron and shall have suitable base castings to fit properly over the bonnets of their respective valves and heavy top sections with stay-put covers. Covers shall be hot-dip galvanized.

B. FLOOR BOXES:

Floor boxes shall be hot-dip galvanized. Where the operating nut is in the concrete slab, the floor box shall be bronze bushed. Where the operating nut is below slab, the opening in the bottom of the box shall be sufficient for passage of the operating key.

C. ADJUSTABLE SHAFT VALVE BOXES:

Adjustable shaft valve boxes shall be concrete or cast iron Brooks No. 3RT, Christie G5, Empire 7-1/2 valve extension box, or equal. Box covers on water lines shall be impressed with the letter "W." Gas line covers shall be impressed with the letter "G."

2.04 PRODUCT DATA

Manufacturer's catalog information and other data confirming conformance to design and material requirements shall be provided in accordance with Section 01300.

PART 3--EXECUTION

3.01 GENERAL

Installation shall be as specified herein. Valve operators shall be located so that they are readily accessible for operation and maintenance. Valve operators shall be mounted for unobstructed access, but mounting shall not obstruct walkways. Valve operators shall not be mounted where shock or vibration will impair their operation. Support systems shall not be attached to handrails, process piping, or mechanical equipment.

3.02 OPERATORS

A. GENERAL:

Valves and gates shall be provided with manual operators, unless specified otherwise. Where possible, manual operators shall be located between 48 inches and 60 inches above the floor or a permanent work platform.

B. WRENCH NUTS:

Wrench nuts shall be provided on buried valves, on valves which are to be operated through floor boxes, and where specified. Extended wrench nuts shall be provided if necessary so that the nut will be within 6 inches of the valve box cover.

C. CHAIN WHEELS:

Unless otherwise specified, valves with centerlines more than 7 feet, 6 inches above the specified operating level shall be provided with chain wheels and operating chains. Chain wheel operated valves shall be provided with a chain guide. Operating chains shall be looped to extend within 4 feet of the specified operating level below the valve. For plug-type valves 8 inches and larger, the operator shall be provided with a hammer blow wheel. Hooks shall be provided for chain storage where the chain may hang in a walkway.

3.03 OPERATOR APPURTENANCES

A. VALVE BOXES:

Valve boxes extending to finished surfaces shall be provided for buried valves.

B. FLOOR BOXES:

Floor boxes shall be provided for wrench operation of valves located below concrete slabs. Each floor box and cover shall be of the depth required for installation in the slab.

END OF SECTION

SECTION 15185

POWERED VALVE AND GATE ACTUATORS AND APPURTENANCES

PART 1--GENERAL

1.01 DESCRIPTION

A. SCOPE:

This section specifies powered actuators for valves and gates and actuator appurtenances.

B. TYPES:

For use in the respective equipment specifications and in this section, powered actuators are defined as follows:

Actuator Type (ACTUSPEC)	Service	Definition
EMTT	Throttling (Modulating)	Electric motor multi-turn
EQTT	Throttling (Modulating)	Electric motor quarter-turn
EMTI	Isolating (Open-Close)	Electric motor multi-turn
EQTI	Isolating (Open-Close)	Electric motor quarter-turn
PDT	Throttling (Modulating)	Pneumatic diaphragm
PDI	Isolating (Open-Close)	Pneumatic diaphragm
PCT	Throttling (Modulating)	Pneumatic cylinder
PCI	Isolating (Open-Close)	Pneumatic cylinder

1.02 REFERENCES

This section contains references to the following documents. They are a part of this section as specified and modified. Where a referenced document contains references to other standards, those documents are included as references under this section as if referenced directly. In the event of conflict between the requirements of this section and those of the listed documents, the requirements of this section shall prevail.

Unless otherwise specified, references to documents shall mean the documents in effect at the time of Advertisement for Bids or Invitation to Bid (or on the effective date of the Agreement if there were no Bids). If referenced documents have been discontinued by the issuing organization, references to those documents shall mean the replacement documents issued or otherwise identified by that organization or, if there are no replacement documents, the last version of the document before it was discontinued. Where document dates are given in the following listing, references to those documents shall mean the specific document version

associated with that date, regardless of whether the document has been superseded by a version with a later date, discontinued or replaced.

Reference	Title
ASTM A519	Seamless Carbon and Alloy Steel Mechanical Tubing
ASTM B584	Copper Alloy Sand Castings for General Applications
JIC P-1	Pneumatic Standards for Industrial Equipment and General Purpose Machine Tools
NEMA ICS-2	Industrial Control Devices, Controllers and Assemblies

1.03 SUBMITTALS

The following information shall be provided in accordance with Section 01300:

1. A copy of this specification section, with addendum updates included, and all referenced and applicable sections, with addendum updates included, with each paragraph check-marked to indicate specification compliance or marked to indicate requested deviations from specification requirements. Check marks shall denote full compliance with a paragraph as a whole. If deviations from the specifications are indicated, and therefore requested by the Contractor, each deviation shall be underlined and denoted by a number in the margin to the right of the identified paragraph, referenced to a detailed written explanation of the reasons for requesting the deviation. The Engineer shall be the final authority for determining acceptability of requested deviations. The remaining portions of the paragraph not underlined will signify compliance on the part of the Contractor with the specifications. Failure to include a copy of the marked-up specification sections, along with justification(s) for any requested deviations to the specification requirements, with the submittal shall be sufficient cause for rejection of the entire submittal with no further consideration.

2. A copy of the contract document control diagrams and process and instrumentation diagrams relating to the submitted equipment, with addendum updates that apply to the equipment in this section, marked to show specific changes necessary for the equipment proposed in the submittal. If no changes are required, the drawing or drawings shall be marked *"no changes required"*. Failure to include copies of the relevant drawings with the submittal shall be cause for rejection of the entire submittal with no further review.

3. Manufacturer's catalog information and other data confirming conformance to design and material requirements.

4. Application sheets and schedules for each valve and actuator showing required mounting, operating torque for valve, torque capacity of actuator,

and power or air pressure requirements. Valve identification (tag) number shall be clear for each application.

5. List of components being provided for each valve, actuator and positioner.

PART 2--PRODUCTS

2.01 GENERAL

Actuators shall be factory-mounted on the valve or gate and provided as a unit. If the actuator controls are not accessible (valve mounted up high or below grade), then the controls shall be mounted at finished floor level or at grade by using a remote control station by the valve actuator manufacturer. Each valve body or actuator shall have cast thereon the word "OPEN," an arrow indicating the direction to open, and flow direction arrows.

2.02 MANUFACTURERS

The electric actuators specified in this section shall be provided by a single manufacturer. For the purposes of standardization by the Owner, the specified equipment shall be manufactured by EIM, or Harold Beck and Sons, Inc., modified as necessary to meet the requirements specified in this section.

2.03 POWERED ACTUATORS

A. GENERAL:

Actuators shall be sized to produce an operating torque equal to twice the maximum required valve operating torque under the specified flow conditions. Specific requirements for each type powered actuator are specified on the actuator specification sheets in paragraph 15185-3.04.

B. ELECTRIC ACTUATORS:

1. GENERAL: Unless otherwise specified, electric actuators shall be provided in accordance with the actuator specification sheets and the following requirements.

2. MOTOR: Actuator motors shall be heavy duty, specifically designed for valve or gate actuator service. Motors shall be of totally-enclosed, non-ventilated construction. Motor shall have an internal space heater with nominal rating of 25-watts. Motors shall be rated as required for each application and shall be or shall incorporate:

a. Four-pole 1800 RPM or provide pole-speed as required for the application.

b. Suitable for use with 460 volt, 3-phase, 60-Hertz power with +/- 10% voltage fluctuation.

c. NEMA Class F insulation.

d. Thermistor for thermal protection embedded in the motor windings.

e. Automatic motor overload relay reset.

f. Four conduit openings.

3. ENCLOSURE: Motor and electrical enclosures shall be rated for the application and location specified:

a. NEMA-4X Weatherproof

b. NEMA-6 Submersible

c. NEMA-7 Explosion proof

4. MOTOR STARTER: Actuator shall be provided with a three phase full voltage reversing starter rated at 30-amperes both mechanically and electrically interlocked with overload protection or elements in each of the three poles.

Control Transformer shall be epoxy encapsulated and impregnated and rated at a minimum of 75VA with 120Vac secondary and other required secondary voltages of 18 Vac and 12 Vac as required, with short-circuit and overload protection.

Provide lockable internal circuit breaker or internal disconnect switch where possible.

5. DISCONNECT SWITCH: Actuator shall be provided with a lockable, heavy-duty, nonfused-disconnect switch that is close-coupled to the motor actuator. If actuator manufacturer requires a fusible disconnect for protection; they shall be provided in accordance with Division 16.

6. GEARING: Gearing shall be double-reduction, with a helical gear and pinion forming the first reduction and a worm and worm gear forming the second. The helical gear and pinion shall be fabricated from heat-treated alloy steel with hobbed and finished shaved teeth. The worm shall be fabricated from heat-treated alloy steel, ground, carburized and hardened. The worm gear shall be fabricated from high tensile strength bronze with hobbed teeth.

The stem nut shall be fabricated from high tensile strength bronze and shall be the two-piece type, when possible. It shall be possible to remove the stem nut from rising stem actuators from the top without removing the actuator from the valve or gate, disconnecting any electrical wiring, or disassembling any of the gearing. All gearing shall be designed to withstand a 100 percent overload.

7. TORQUE SWITCH: Electric actuators shall be provided with a double-torque switch set to disengage motor power at 75 percent of the shaft's design torque. The torque switch shall operate in both the opening and closing directions and shall operate during the complete cycle without the use of auxiliary relays, linkages, latches, or other devices.

Each side of the torque switch shall have a numbered dial for set point adjustment. A calibration tag shall be mounted near each switch for correlating the dial settings with output torque.

8. MANUAL ACTUATOR: Electric actuators shall be provided with a handwheel for manual operation. The handwheel shall not rotate during motor operation nor shall a locked motor prevent manual operation. Motor or manual selection shall be accomplished by a positive declutching knob or lever which will disengage the motor and motor gearing mechanically but not electrically. Prohibit manual and motor simultaneously operation. Hand operation shall not require more than 100 pounds of rim effort at maximum torque.

9. HAMMER BLOW DEVICE: Electric actuators shall be provided with a built-in lost-motion device that allows sufficient travel of the worm gear, prior to engaging the stem nut, for the motor to reach full speed. This action shall impart a "hammer blow" to start the valve or gate in motion in either direction. The load shall be shared equally by two lugs cast integrally on the drive sleeve.

10. CONDUIT OPENINGS: Electric actuators shall be provided with the largest available: power conduit opening; control conduit opening; and instrument conduit opening.

C. PNEUMATIC DIAPHRAGM ACTUATORS:

1. GENERAL: Unless otherwise specified, pneumatic diaphragm actuators shall be provided in accordance with the actuator specification sheets and the following requirements.

2. BODY AND CYLINDER. Cylinder size shall be sufficient to produce the torque specified in paragraph 15185-2.03 A, with a supply air pressure of not more than 65 psig.

3. BODY AND DIAPHRAGM: Actuators shall be provided with a pressed steel diaphragm casing and a cast-iron spring barrel and housing. Diaphragm shall be polyester reinforced nitrile rubber. Diaphragm size shall be sufficient to produce the torque specified in paragraph 15185-2.03 A, with a supply air pressure of not more than 40 psig.

4. MANUAL HANDWHEEL ACTUATOR: Actuators shall be provided with a manual worm gear, handwheel actuator. Unless otherwise specified, the actuator shall have a 90-degree rotation, and shall be equipped with travel stops capable of limiting the valve closing to any angle between 0 and 30 degrees and the valve opening to any angle between 60 and 90 degrees.

The actuator body shall be cast iron with a steel cover. The worm shall be steel, and the worm gear shall be cast iron. The worm gear shaft and handwheel shaft shall be 17-4PH stainless steel. The handwheel shall be 12 inches in diameter and shall be cast iron. It shall be possible to mount the actuator in various positions relative to the pipeline. It shall be possible to mechanically disengage the manual actuator from the valve shaft when not in use; no tools shall be required to accomplish this operation. The manual actuator shall be Fisher Controls, Type 1076, or equal.

D. PNEUMATIC CYLINDER ACTUATORS:

1. GENERAL: Unless otherwise specified, pneumatic cylinder actuators shall be provided in accordance with the actuator specification sheets and the following requirements.

2. MECHANISM: Actuators shall be double-acting unless otherwise specified. Actuators shall be designed so that the spring return option may be added in the field after installation. Unless otherwise specified, actuators shall be double-piston, rack-and-pinion type and shall provide a 90-degree rotation of the output shaft. Actuators shall be totally enclosed, with no external moving parts, except for the output shaft which shall be accessible for manual operation of the valve. Bearing surfaces, including the inside cylinder wall and guides, shall be coated with a permanent, dry-film lubricant and corrosion inhibitor.

Cylinder, end caps, and spring cartridge, shall be made of precision extruded, hard-anodized aluminum. Pistons shall be made of hard-anodized aluminum alloy and the output shaft and pinion shall be hardened and tempered alloy steel. Actuators shall be suitable for operating in temperatures ranging from -20 to +160 degrees F. Piston seals shall be O-ring type. Actuators shall be suitable for use with non-lubricated dry instrument quality air at up to 120 psig. Actuators shall have internal porting with no external piping.

Heavy-duty, totally enclosed scotch-yoke type mechanisms, where specified, shall comply with applicable portions of the specification for double-piston type actuators and shall be suitable for use with non-lubricated dry instrument quality air. Cylinder shall be steel, ASTM A519, Grade 1018; piston shall be gray iron; bearings shall be bronze, ASTM B584, Grade 88-10-2; and seals shall be lip-or cup-type of duro-nitile elastomer. Steel cylinder rod shall be electroplated with nickel.

Scotch-yoke type mechanisms may also be provided when the double-piston type is unable to comply with the requirements of paragraph 15185-2.03 A.

3. MOUNTING: The actuator output shaft shall attach directly to the valve stem with no intermediate linkages. Actuators shall be suitable for operation in any valve mounting attitude and either parallel or perpendicular to the pipeline.

2.04 ACTUATOR APPURTENANCES

A. TUBING:

Unless otherwise specified, tubing furnished with powered actuators shall be ASTM B68 soft annealed copper tubing with an ASTM D883 PVC jacket. Outside diameter of the jacket shall be 1/2 or 3/8-inch, as specified. Tubing shall mate with flareless fittings without removing the jacket.

B. TUBE FITTINGS:

Unless otherwise specified, tube fittings furnished with powered actuators shall be brass and shall be the double-ferrule swage type. Flare, ball sleeve compression or single-ferrule swage type are not acceptable. Fittings shall be Crawford "Swagelok", Hoke "Gyrolok".

C. AIR PRESSURE FILTER REGULATORS:

Filter regulators shall be provided where specified. Filter regulators shall have aluminum bodies and a second tapped output gage connection. Filter regulators shall be provided with an output pressure gage and range spring appropriate for the intended application. The output pressure gage shall be a minimum of 2 inches in diameter and shall have an accuracy of plus or minus 2 percent of scale, or better.

The filter element shall be 40 micron, replaceable and shall be made of resin-impregnated cellulose. The filter dripwell shall be equipped with a drain cock. Filter regulators shall be adjustable over the spring range by means of a wrench-adjustable set screw. The set screw shall be equipped with a lock nut. Filter regulators shall be equipped with an internal relief valve to maintain the output pressure at set point during periods of no flow. Filter regulators shall be Fisher Type 67FR, or equal.

D. IDENTIFICATION TAGS:

Each powered actuator shall be provided with a 16-gage stainless steel identification tag that bear the equipment description and tag number of the actuator, as specified. Characters shall be 1/4 inch, die-stamped. Identification tags shall be securely attached to the actuator in a readily visible location using stainless steel screws or wire.

2.05 PRODUCT DATA

The following information, and technical data for all equipment specified in this section shall be provided in accordance with Section 01300.

1. Testing procedures and forms specified in paragraph 15185-3.02 A.

2. Training Certification Form 11000-B specified in paragraph 15185-3.03.

3. Operating and maintenance data in conformance with Section 01730.

PART 3--EXECUTION

3.01 INSTALLATION

A. GENERAL:

Installation shall be as specified herein. Valve actuators shall be located so that they are readily accessible for operation and maintenance and mounted for unobstructed access.

1. Valve actuator mounting shall not obstruct walkways.

2. Valve actuator support systems shall not be attached to handrails, process

piping, or mechanical equipment.

3. Valve actuators mounting shall not be located where shock or vibration will impair their operation.

B. POWERED ACTUATORS:

1. GENERAL: Powered actuators shall have their manual operating accessory, where possible, located between 48 inches and 60 inches above the floor or a permanent work platform

2. IDENTIFICATION TAGS: Tags shall be located in a clearly visible location on the valves. If necessary, reposition and reattachment with stainless steel screws or wire.

3. ELECTRICAL POWER WIRING: Electric power wiring and equipment shall be in compliance with Division 16.

4. SIGNAL WIRING: Electrical signal wiring and equipment shall be in compliance with Division 16.

5. INSTRUMENT SUPPLY AND SIGNAL AIR CONNECTIONS: Tubing shall be installed on supports spaced not more than 3 feet apart and shall run parallel of perpendicular to walls structural members, or intersections of vertical planes and the ceiling. Unless otherwise shown, tubing shall follow building surfaces closely or shall be carried in trays or conduit. Tubing shall not be supported from piping or equipment except at process taps or connections to the device served. Tubes supported directly on concrete surfaces shall be spaced at least 1/8-inch from the concrete. Tubing support shall be one-hole malleable iron clamps with clamp backs as required.

Bends shall be formed to uniform radii without flattening. Ends of tubing shall be square-cut and deburred before installation in fittings. Fittings shall be used for splices, connections, and turns near final connections. Bulkhead fittings shall be used when tubing enters a panel.

Tubing shall be cleaned with dry, oil-free air prior to final connections.

3.02 TESTING

A. GENERAL REQUIREMENTS:

Testing shall be performed in accordance with Section 01660, and this section. No required test shall be applied without prior notice to the Construction Manager to witness any test. At least 14 days before the commencement of any testing activity, a detailed step-by-step test procedure, complete with forms for the recording of test results shall be provided. All equipment necessary to perform the required tests shall be provided.

B. PIPING TESTING:

1. PNEUMATIC PIPING SYSTEMS: Pneumatic piping systems shall be tested for leaks in accordance with Section 15050.

2. LIQUID PIPING SYSTEMS: Liquid piping systems shall be tested for leaks in compliance with Section 15050.

3.03 TRAINING

Operation and maintenance training for the equipment provided under this section shall be provided for the Owner's personnel in accordance with Section 01664. Training shall be certified on Form 11000-B specified in Section 01999.

3.04 ACTUATOR SPECIFICATION (ACTUSPEC) SHEETS

The following ACTUSPEC sheets are included in this section:

Actuator Type (ACTUSPEC)	Service	Definition
EMTT	Throttling (Modulating)	Electric motor multi-turn
EQTT	Throttling (Modulating)	Electric motor quarter-turn
EMTI	Isolating (Open-Close)	Electric motor multi-turn
EQTI	Isolating (Open-Close)	Electric motor quarter-turn
PDT	Throttling (Modulating)	Pneumatic diaphragm
PDI	Isolating (Open-Close)	Pneumatic diaphragm
PCT	Throttling (Modulating)	Pneumatic cylinder
PCI	Isolating (Open-Close)	Pneumatic cylinder

3.04 VALVE ACTUATOR SPECIFICATION SHEETS (ACTUSPEC)

Actuator Type:	EMTT
Description:	Electric Multi-Turn Throttling valve actuator
Construction:	Actuators shall be Limitorque Type L120; EIM Series 2000; or Rotork IQ Multi-Turn (60-starts/per hour) or IQM Multi-Turn Modulating (600 or 1200-starts/per hour); modified as necessary to provide the specified features and to meet the specified operating requirements.
Controller:	EMTT actuator controllers shall consist of a solid-state electronic, servo-amplifier comparator and an electro-mechanical reversing starter. The controller shall accept an external 4 to 20 mA DC isolated position input signal into a maximum load of 250 ohms. A position feedback signal shall be generated by a 1000-ohm potentiometer coupled directly to the shaft of rotary motion valves and to the actuator gear train of linear motion valves or gates. The controller shall compare the input signal with the feedback signal to produce an error signal. The controller shall cause the motor to move the valve or gate in a direction so as to reduce the magnitude of the error signal. The controller positioning accuracy shall be plus or minus 1.0 percent of travel or better. Operating speeds shall be 12 inches per minute for linear actuators and 180 degrees per minute for rotary actuators. The controller shall be Limitorque Modutronic 20, EIM Futronic II, Rotork IQ (Multi-Turn) or IQM (Multi-Turn Modulating), or equal.
Controls:	Control power shall be provided by an integral 120 volts AC, single-phase control transformer unless a separate power source is shown on the electrical drawings. The transformer shall be sized to operate at not more than 80 percent of rating with the connected load shown. The transformer shall have protective secondary fusing. Actuators shall be provided with an integral control station. The control station shall include a "LOCAL/ REMOTE" switch, an "OPEN" pushbutton, a "CLOSE" pushbutton, and a "STOP" pushbutton. When the "LOCAL/REMOTE" switch is in the "LOCAL" position, momentary operation of the "OPEN" or "CLOSE" pushbutton shall cause the actuator to drive the valve or gate to the appropriate limit.

Actuator Type:	EMTT (continued)
	When the "LOCAL/ REMOTE" switch is in the "LOCAL" position, momentary operation of the "STOP" pushbutton shall cause the actuator to stop. When the "LOCAL/ REMOTE" switch is in the "REMOTE" position, the actuator shall move in response to the external position input signal, and the pushbuttons shall have no effect.

3.04 VALVE ACTUATOR SPECIFICATION SHEETS (ACTUSPEC)

Actuator Type:	EQTT
Description:	Electric Quarter-Turn Throttling valve actuator
Construction:	Actuators shall be Limitorque Type L120, with "T" Series 90 degree gear actuator; EIM Series 2000; or Rotork IQTM (Quarter Turn Modulating); modified as necessary to provide the specified features and to meet the specified operating requirements.
Gear Box:	90-degree gear actuator.
Controller:	EQTT actuator controllers shall consist of a solid-state electronic, servo-amplifier comparator and an electro-mechanical reversing starter. The controller shall accept an external 4- to 20-mA DC isolated position input signal into a maximum load of 250 ohms. A position feedback signal shall be generated by a 1000-ohm potentiometer coupled directly to the shaft of rotary motion valves and to the actuator gear train of linear motion valves or gates. The controller shall compare the input signal with the feedback signal to produce an error signal. The controller shall cause the motor to move the valve or gate in a direction so as to reduce the magnitude of the error signal. The controller positioning accuracy shall be plus or minus 1.0 percent of travel or better. Operating speeds shall be 12 inches per minute for linear actuators and 180 degrees per minute for rotary actuators. The controller shall be Limitorque Modutronic 20; EIM Futronic II; Rotork IQTM; or equal.
Controls:	Control power shall be provided by an integral 120 volts AC, single-phase control transformer unless a separate power source is shown on the electrical drawings. The transformer shall be sized to operate at not more than 80 percent of rating with the connected load shown. The transformer shall have protective secondary fusing. Actuators shall be provided with an integral control station. The control station shall include a "LOCAL/REMOTE" switch, an "OPEN" pushbutton, a "CLOSE" pushbutton, and a "STOP" pushbutton. When the "LOCAL/REMOTE" switch is in the "LOCAL" position, momentary operation

Actuator Type:	EQTT (continued)
	of the "OPEN" or "CLOSE" pushbutton shall cause the actuator to drive the valve or gate to the appropriate limit. When the "LOCAL/REMOTE" switch is in the "LOCAL" position, momentary operation of the "STOP" pushbutton shall cause the actuator to stop. When the "LOCAL/ REMOTE" switch is in the "REMOTE" position, the actuator shall move in response to the external position input signal, and the pushbuttons shall have no effect.

3.04 VALVE ACTUATOR SPECIFICATION SHEETS (ACTUSPEC)

Actuator Type:	EMTI
Description:	Electric Multi-turn Isolation valve actuator
Construction:	Actuators shall be Limitorque Type L120; EIM Series 2000; or Rotork IQ; modified as necessary to provide the specified features and to meet the specified operating requirements.
Controller:	The controller shall be an unfused disconnect type combination starter in compliance with NEMA ICS.
Controls:	Control power shall be provided by an integral 120 volts AC, single-phase control transformer unless a separate power source is shown on the electrical drawings. The transformer shall be sized to operate at not more than 80 percent of rating with the connected load shown. The transformer shall have protective secondary fusing. Actuators shall be provided with an integral control station. The control station shall include an "OPEN" pushbutton, a "CLOSE" pushbutton, and a "STOP" pushbutton. Momentary operation of the "OPEN" or "CLOSE" pushbutton shall cause the actuator to drive the valve or gate to the appropriate limit. Momentary operation of the "STOP" pushbutton shall cause the actuator to stop. Terminals for remote "OPEN" and "CLOSE" pushbuttons shall be provided.
Position Switches:	Actuators shall be provided with a minimum of two rotor-type switch assemblies containing a minimum of 8 contacts. When shown on the electrical drawings, the actuator shall have 16 contacts, 4 on each of 4 rotors. Position switches shall be heavy-duty, open-contact type, with rotary wiping action. Contacts shall be rated at 3 amps at 120 volts AC. Position switches and gearing shall be an integral part of the actuator. Position switch gearing shall be of the intermittent type and shall allow switch set points to be set at any point of travel between fully open and fully closed. Switches shall not be subject to breakage or slippage due to over-travel. The position switch assembly shall be enclosed in its own housing.

3.04 VALVE ACTUATOR SPECIFICATION SHEETS (ACTUSPEC)

Actuator Type:	EQTI - 460 Vac, 3-Phase, 60-Hertz
Description:	Electric Quarter-turn Isolation valve actuator
Construction:	Actuators shall be Limitorque Type L120, with "T" Series 90 degree gear actuator; EIM Series 2000; Rotork IQT or Rotork IQ where a gear box is required due to high-torque applications; modified as necessary to provide the specified features and to meet the specified operating requirements.
Gear Box:	90-degree gear actuator.
Controller:	An unfused disconnect type combination starter in compliance with NEMA ICS.
Controls:	Control power shall be provided by an integral 120 volts AC, single-phase control transformer unless a separate power source is shown on the electrical drawings. The transformer shall be sized to operate at not more than 80 percent of rating with the connected load shown. The transformer shall have protective secondary fusing. Actuators shall be provided with an integral control station that includes an "OPEN" pushbutton, a "CLOSE" pushbutton, and a "STOP" pushbutton. Momentary operation of the "OPEN" or "CLOSE" pushbutton shall cause the actuator to drive the valve or gate to the appropriate limit. Momentary operation of the "STOP" pushbutton shall cause the actuator to stop. Terminals for remote "OPEN" and "CLOSE" pushbuttons shall be provided.
Position Switches:	Actuators shall be provided with a minimum of two rotor-type switch assemblies containing a minimum of 8 contacts. When shown on the electrical drawings, the actuator shall have 16 contacts, 4 on each of 4 rotors. Position switches shall be heavy-duty, open-contact type, with rotary wiping action. Contacts shall be rated at 3

Actuator Type:	EQTI 460 Vac, 3-Phase, 60-Hertz amps at 120 volts AC. Position switches and gearing shall be an integral part of the actuator. Position switch gearing shall be of the intermittent type and shall allow switch set points to be set at any point of travel between fully open and fully closed. Switches shall not be subject to breakage or slippage due to over-travel. The position switch assembly shall be enclosed in its own housing.

3.04 VALVE ACTUATOR SPECIFICATION SHEETS (ACTUSPEC)

Actuator Type:	PDT
Description:	Pneumatic diaphragm type throttling actuator
Construction:	Actuators shall be Fisher Controls Type 1051; or equal, modified as necessary to provide the specified features and to meet the specified operating requirements.
Electro-pneumatic Transducer:	Actuators shall be provided with an electro-pneumatic transducer that receives a direct current input signal and use a flapper-nozzle, torque motor, and a pneumatic relay to convert the input signal into a proportional pneumatic output signal. The electro-pneumatic transducer shall be housed in a caste aluminum, explosion proof case, specifically designed for direct mounting on valve actuators. The electropneumatic transducer shall be provided with an air supply filter regulator and gage. Input signal shall be 4 to 20 mAdc and the output signal shall be 3 to 15 psig, unless otherwise specified. Signal input impedance shall not exceed 180 ohms. Air supply shall be 20 psig, unless otherwise specified. Zero and span shall be screwdriver adjustable, and located within the case. It shall be possible to change the transducer from direct-acting to reverse-acting in the field without the need for additional parts or special tools. The electro-pneumatic transducer shall be Fisher Controls Type 546, or equal.
Pneumatic Positioner:	Actuators shall be provided with a pneumatic positioner with a characterizable-cam, of the force-balance type with moving parts including feedback spring enclosed in a gasketed weatherproof case. Designed for use with rotary valves in throttling applications and for direct mounting on valve actuators.

Actuator Type: PDT (continued)

Signal input shall be 3 to 15 psig, unless otherwise specified. It shall be possible to change the positioner from direct-acting to reverse-acting in the field without the need for additional parts or special tools. The positioner air supply filter regulator shall operate at supply pressures up to 150 psig. Maximum steady-state air consumption shall not exceed 10 scfh.

Linearity shall be plus or minus 1 percent of span, or better; hysteresis shall be plus or minus 0.1 percent of span, or better.

The positioner shall be provided with signal input, positioner output, air supply gages, and an integral bypass valve that allows the signal input to pass directly to the valve actuator.

The positioner shall be provided with a characterized-cam designed to linearize the flow rate through the associated valve with respect to the signal input.

The pneumatic positioner shall be Fisher Controls Type 3610J, or equal.

3.04 VALVE ACTUATOR SPECIFICATION SHEETS (ACTUSPEC)

Actuator Type: PDI

Description: Pneumatic diaphragm type isolating actuator

Construction: Actuators shall be Fisher Controls Type 1051; or equal, modified as necessary to provide the specified features and to meet the specified operating requirements.

Solenoid Pilot Valve: Actuators shall be provided with a factory-mounted and piped pilot solenoid valve. Unless otherwise specified, supply air tubing shall be 3/8 inch. Pilot solenoid valves shall be direct-acting, three-way with 1/4-inch NPTF ports.

Unless otherwise specified, solenoid valves shall be designed to seal the pressurized (supply) port and exhaust the actuator when de-energized. Solenoid valves shall have combination NEMA 7C, 7D, and 4 enclosures with the coils fully encapsulated with Class H insulation, and rated for continuous duty at 120 volts AC.

Pilot solenoid valves shall be CSA certified and UL listed. A supply air filter regulator with a gage shall be provided with each pilot solenoid valve. Materials of construction shall be as follows:

Component	Material
Body	Brass, unless otherwise specified
Seal	Teflon or Buna-N
Disc	Teflon or Buna-N
Core tube	Type 305 stainless steel
Core and plug nut	Type 430F stainless steel
Core springs	Type 302 stainless steel

Solenoid valves shall be Automatic Switch Company, Series 8320, or equal, modified as necessary to provide the specified features.

Actuator Type:	PDI (continued)
Position Switch:	Actuators shall be provided with position switches with gold Form C (SPDP) contacts rated not less than 1-ampere at 120 volts AC and 0.4-amperes at 24 volts DC. Unless specified otherwise, one set of limit switches shall be set to actuate when the valve is less than 3 percent open, and the second set shall be set to actuate when the valve is more than 97 percent open. Limit switches shall be enclosed in a NEMA 7 explosion proof case, rotary type, positively coupled to the actuator. Limit switches shall be Fisher Type 304, or equal.

3.04 VALVE ACTUATOR SPECIFICATION SHEETS (ACTUSPEC)

Actuator Type:	PCT
Description:	Pneumatic cylinder type throttling actuator
Construction:	Actuators shall be Worchester Series 39; Keystone Series F-790; or equal, modified as necessary to provide the specified features and to meet the specified operating requirements.
Electro-pneumatic Transducer:	Actuators shall be provided with an electro-pneumatic transducer that receives a direct current input signal and uses a flapper-nozzle, torque motor, and a pneumatic relay to convert the input signal into a proportional pneumatic output signal. The electro-pneumatic transducer shall be housed in a cast aluminum, explosion proof case, specifically designed for direct mounting on valve actuators. The electro-pneumatic transducer shall be provided with an air supply filter regulator and gage. The input signal shall be 4 to 20 mAdc and the output signal shall be 3 to 15 psig, unless otherwise specified. Signal input impedance shall not exceed 180 ohms. The air supply shall be 20 psig, unless otherwise specified. Zero and span shall be screwdriver adjustable, and located within the case. It shall be possible to change the transducer from direct-acting to reverse-acting in the field without the need for additional parts or special tools. The electro-pneumatic transducer shall be Fisher Controls Type 546, or equal.
Pneumatic Positioner:	Actuators shall be provided with a pneumatic positioner of the characterizable-cam force-balance type with moving parts including feedback spring enclosed in a gasketed weatherproof case.

Actuator Type: PCT (continued)

The pneumatic positioner shall be designed for use with double-acting or spring-return pneumatic cylinders, for use in throttling applications, and for use with direct mounting on valve actuators. It shall be possible to change the positioner from direct-acting to reverse-acting in the field without the need for additional parts or special tools.

Signal input shall be 3 to 15 psig, unless otherwise specified. The air supply filter regulator shall operate at supply pressures up to 150 psig with the maximum steady-state air consumption not to exceed 0.4 scfm at 80 psig supply pressure. Provide gages for the signal input, the positioner output, and air supply.

Linearity:	Plus or minus 1 percent of span;
Hysteresis:	Plus or minus 2.5 percent of span;
Deadband:	Not exceed 1.0 percent of span;
Resolution:	Not less than 0.25 percent of span;
Repeatability:	Plus or minus 0.5 percent of span.

The positioner shall be provided with a characterized cam designed to linearize the flow rate through the associated valve with respect to the signal input.

The pneumatic positioner shall be Worchester Series V15, Keystone Type A, or equal.

3.04 VALVE ACTUATOR SPECIFICATION SHEETS (ACTUSPEC)

Actuator Type:	PCI
Description:	Pneumatic cylinder type isolating actuator
Construction:	Actuators shall be Worchester Series 39; Keystone Series F-790; or equal, modified as necessary to provide the specified features and to meet the specified operating requirements.
Solenoid Pilot Valve:	Solenoid pilot valves shall be factory mounted directly over the actuator ports with no external tubing. Lapped-spool, floating-sleeve type, suitable for continuous service on dry, non-lubricated instrument quality air, and suitable for supply pressures between 25 and 125 psig. A supply air filter regulator with a gage shall be provided with each pilot solenoid valve. Solenoid pilot valves shall be four-way, five-port, direct-acting with integral speed control needle valves and mufflers on each exhaust port and suitable for three-way operation by blocking the unused cylinder port. Solenoid pilot valves shall be provided with non-locking recessed manual override and shall comply with JIC P-1, except that NEMA 7D cases shall be provided in hazardous areas. Solenoid pilot valves and supply air piping shall be sized to provide full stroking of the actuator and connected control valve within 3 seconds, with speed control needles fully open.
Position Switch:	The position switches shall have gold Form C contacts rated at 1-amperes at 120 volts AC and 0.5-amperes at 24 volts DC. Unless specified otherwise, one set of limit switches shall be set to actuate when the valve is less than 3 percent open, and the second set shall be set to actuate when the valve is more than 97 percent open.

Actuator Type:	PCI (continued)
	Limit switches shall be enclosed in a NEMA 7 explosion proof case and be rotary type, positively coupled to the actuator. Limit switches shall be Fisher Type 304, or equal.

3.04 VALVE ACTUATOR SPECIFICATION SHEETS (ACTUSPEC)

Actuator Type:	NMCT
Description:	Non-Metalic Pneumatic Cylinder Type throttling actuator
Construction:	Actuators shall conform to AWWA C504 with actuator-mounted appurtenances factory wired via liquid-tight flexible conduit to a terminal strip housed in a NEMA 4 junction box. Actuators shall be Henry Pratt, or equal, modified as necessary to provide the specified features and to meet the specified operating requirements.
Controller:	Actuator controllers shall be a solid-state electronic, servo-amplifier device. The controller shall accept an external 4 to 20 mAdc isolated position input signal into a maximum load of 250 ohms. A position feedback signal shall be generated by a 1000-ohm potentiometer coupled directly to the shaft of the valve. The controller shall compare the input signal with the feedback signal to produce an error signal. The controller shall produce a 115-volt AC triac output to operate a four-way dual solenoid valve. The solenoid valve allows hydraulic fluid to enter or exhaust the actuator causing the actuator to move the valve in a direction so as to reduce the magnitude of the error signal. The controller shall be mounted remotely from the valve actuator in a NEMA 4 control cabinet. The control cabinet shall be furnished with a "MANUAL/AUTOMATIC" selector switch and an "OPEN/STOP/CLOSE" selector switch, conforming to Section 16175. The "OPEN/STOP/CLOSE" selector switch shall have no effect unless the "MANUAL/AUTOMATIC" selector switch is in the "MANUAL" position.

Actuator Type: NMCT (continued)

The controller positioning accuracy shall be plus or minus 1.0 percent of travel or better. The controller shall be Pratt Positac, or equal.

Actuator:

Actuator shall consist of a Henry Pratt Model MDT actuator fitted with a Pratt Dura-Cyl power cylinder, or equal.

The actuator shall be specifically designed to use water as a primary operating medium. Actuators shall be sized to develop the required thrust on 60 psig water pressure, unless otherwise specified; however, actuators shall be capable of operating on up to 150 psig.

The cylinder body shall be fabricated from glass fiber reinforced epoxy resin with low-friction additives emulsified throughout. The piston, head, and cap shall also be made of nonmetallic material. The piston rod shall be ground and polished stainless steel, hard-chrome plated. The cylinder shall have both internal and external Buna-N rod wipers. The actuator shall be provided with a hand jack for manual operation.

Solenoid Pilot Valve:

Actuators shall be provided with a dual, four-way solenoid valve for controlling the flow of the hydraulic medium to the cylinder. The solenoid valve shall be mounted on the actuator.

The solenoid shall have a brass body and poppet seats. The solenoid valve shall be provided with two brass flow control valves to permit independent setting of the opening and closing speeds."

END OF SECTION

SECTION 15260

DUCTWORK THERMAL INSULATION

PART 1—GENERAL

1.01 DESCRIPTION

A. SCOPE:

This section specifies internal and external thermal insulation for sheet metal air ductwork systems.

B. TYPE:

External ductwork insulation shall be the flexible blanket type and have a reinforced foil kraft vapor barrier facing. Internal insulation shall be the rigid board type and have a smooth integral Fiberglass mat that faces the air stream. External outdoor ductwork insulation shall be rigid type. Internal and external ductwork insulation shall be Knauf, Johns-Manville, Owens Corning Fiberglass, or equal.

1.02 QUALITY ASSURANCE

A. INTERNAL DUCTWORK INSULATION:

Internal ductwork insulation shall be designed to comply with the following:

1.	Thickness, inches	1
2.	Temperature Range, degrees F	40-250
3.	Density, pounds per cubic foot	3
4.	Moisture Absorption, percent by volume	0.5
5.	Thermal Conductivity, BTU per square foot per degree F per hour (based on mean temperature of 75 degrees F)	0.23

B. EXTERNAL DUCTWORK INSULATION:

External ductwork insulation shall be designed to comply with the following:

1.	Thickness, inches	1-1/2
2.	Temperature Range, degrees F	40-250
3.	Density, pounds per cubic foot	3/4
4.	Moisture Absorption, percent by volume	0.20
5.	Thermal Conductivity, BTU per square foot per degree F per hour (based on mean temperature of 75 degrees F)	0.30

C. EXTERNAL OUTDOOR DUCTWORK INSULATION:

External outdoor ductwork insulation shall be designed to comply with the following:

1.	Thickness, inches	1-1/2
2.	Temperature Range, degrees F	0-250
3.	Density, pounds per cubic foot	6
4.	Moisture Absorption, percent by weight	5
5.	Thermal Conductivity, BTU per square foot per degree F per hour (based on mean temperature of 75 degrees F)	0.23

1.03 SUBMITTALS

Submittals shall be provided in accordance with Section 01300 and shall include the following items:

1. A copy of this specification section, with addendum updates included, and all referenced and applicable sections, with addendum updates included, with each paragraph check-marked to indicate specification compliance or marked to indicate requested deviations from specification requirements. Check marks (✓) shall denote full compliance with a paragraph as a whole. If deviations from the specifications are indicated, and therefore requested by the Contractor, each deviation shall be underlined and denoted by a number in the margin to the right of the identified paragraph. The remaining portions of the paragraph not underlined will signify compliance on the part of the Contractor with the specifications. The submittal shall be accompanied by a detailed, written justification for each deviation. *Failure to include a copy of the marked-up specification sections, along with justification(s) for any requested deviations to the specification requirements, with the submittal shall be sufficient cause for rejection of the entire submittal with no further consideration.*

2. Submittals shall include a complete description of the ductwork insulation and accessories listed in PART 2 of this specification section. The description shall be sufficient to demonstrate compliance with these specifications, including performance data at given conditions.

PART 2—PRODUCTS

2.01 INTERNAL DUCTWORK INSULATION

Internal insulation shall be made from long, flame-attenuated glass fibers bonded with a thermosetting resin. The air stream surface is covered with a tough, smooth, black Fiberglass mat.

2.02 EXTERNAL DUCTWORK INSULATION

External insulation shall be made of long, extremely fine, flame-attenuated glass fibers, bonded with a thermosetting resin. The facing shall be constructed out of reinforced foil kraft.

2.03 EXTERNAL OUTDOOR DUCTWORK INSULATION

External outdoor ductwork insulation shall be rigid insulation composed of glass fibers with FSK jacket. Provide aluminum jackets on external outdoor ductwork insulation. External outdoor ductwork shall be both insulated internally and externally.

2.04 ALUMINUM JACKETS

Aluminum jackets shall be constructed of smooth finish aluminum sheet conforming to ASTM B209, alloy 5005, temper H16, with integral vapor barrier. Jackets shall be 0.016-inch thick.

PART 3—EXECUTION

3.01 GENERAL

Internal insulation shall be used in all exposed areas or where shown on the drawings or specified. Where internal insulation is not shown and the ducts are not exposed to view, either external or internal type insulation shall be used. Both internal and external insulation shall be used for all outdoor ductwork. Provide aluminum jacket for outdoor ductwork.

3.02 INTERNAL DUCTWORK INSULATION

Internal insulation shall be applied with edges tightly butted and shall be secured by applying 50-percent coverage (6-inch wide strips on 12-inch centers) of vapor barrier adhesive approved by the National Fire Protection Association. All leading and cross joint edges shall be coated with the same adhesive. In addition, internal insulation shall also be secure by mechanical fasteners such as speed clips or nail type stick clips fastened with adhesive. One mechanical fastener shall be used for every 1 square foot of duct surface. Fasteners shall be started a minimum of 2 inches from the leading edge of each section and a minimum of 3 inches from all cross joints.

3.03 EXTERNAL DUCTWORK INSULATION

External duct insulation shall be applied with edges tightly butted and shall be secured by applying 50-percent coverage (6-inch-wide strips on 12-inch centers) of vapor barrier adhesive. All seams shall be sealed with 4-inch-wide tape with the ends of the tape overlapping at least 4 inches. Where the underside of horizontal ducts exceeds 24 inches in width, insulation shall be additionally secured by mechanical fasteners such as speed clips and nail type stick clips fastened with adhesive. One mechanical fastener shall be used for every 2 square feet of duct surface. All duct penetrations shall be sealed with a piece of the same facing material as the duct and installed with the same vapor barrier adhesive. External insulation and vapor barrier shall extend through all duct sleeves.

3.04 EXTERNAL OUTDOOR INSULATION

External outdoor ductwork insulation shall be applied as per manufacturer's recommendation and in accordance with the procedures in publication "Commercial and Industrial Insulation Standards."

3.05 DUCTWORK INSULATION

All heating and air conditioning supply ducts, return ducts, intake ducts and flexible connections shall be insulated. Exhaust air ducts need not be insulated.

END OF SECTION

SECTION 15265

ELECTRIC HEAT TRACER TAPE

PART 1--GENERAL

1.01 DESCRIPTION

This section specifies electric heat tracer tape and control for protection of piping against freezing.

1.02 QUALITY ASSURANCE

A. REFERENCES:

This section contains references to the following documents. They are a part of this section as specified and modified. Where a referenced document contains references to other standards, those documents are included as references under this section as if referenced directly. In the event of conflict between the requirements of this section and those of the listed documents, the requirements of this section shall prevail.

Unless otherwise specified, references to documents shall mean the documents in effect at the time of Advertisement for Bids or Invitation to Bid (or on the effective date of the Agreement if there were no Bids). If referenced documents have been discontinued by the issuing organization, references to those documents shall mean the replacement documents issued or otherwise identified by that organization or, if there are no replacement documents, the last version of the document before it was discontinued. Where document dates are given in the following listing, references to those documents shall mean the specific document version associated with that date, regardless of whether the document has been superseded by a version with a later date, discontinued or replaced.

Reference	Title
NEMA ICS 1	Industrial Control and Systems

PART 2--PRODUCTS

2.01 MANUFACTURE

A. GENERAL:

Tracer tape shall consist of self-limiting, parallel circuit construction with a continuous inner core of conductive material between two copper bus wires. The resistance and heating capacity of the heating material shall vary in response to piping temperature changes. Tape shall withstand continuous exposure to 150 degree F temperature. Tracer tape shall operate using 120 volt AC, 1 phase, 60 Hz power.

Tracer tape shall be provided with copper shield and fluoropolymer jacket.

B. TYPE 1:

Type 1 tracer tape shall have a thermal rating of 4 watts per foot at 50 degrees F.

C. TYPE 2:

Type 2 tracer tape shall have a thermal rating of 8 watts per foot at 50 degrees F.

2.02 CONTROLS

A. GENERAL:

Each length of tracer tape shall be controlled by a thermostat. Thermostat shall be provided in an aluminum, NEMA 4, watertight enclosure.

Each length of tracer tape shall be provided with a signal light wired to the terminating end. Light shall indicate that tape is energized.

B. TYPE A:

Type A thermostat shall control by sensing ambient temperature with the following characteristics:

1. Rating: 20 amperes at 120V AC
2. Control temperature range: 15 to 140 degrees F
3. Calibration tolerance: 2 degrees F
4. Sensor material: stainless steel
5. Exposure temperature: -65 to 140 degrees F
6. Temperature setting: 50 degrees F

C. TYPE B:

Type B thermostat shall control by sensing pipe temperature with the following characteristics:

1. Rating: 20 amperes at 120V AC
2. Control temperature range: 25 to 225 degrees F
3. Calibration tolerance: 1 percent of full scale
4. Bulb and capillary material: stainless steel
5. Control exposure temperature: -65 to 140 degrees F
6. Sensor overrange temperature: 325 degrees F maximum
7. Temperature setting: 50 degrees F

2.03 PRODUCT DATA

The following information shall be provided in accordance with Section 01300:

1. Manufacturer's product literature.

2. Certification that tracer tape can withstand temperature specified in paragraph 15265-2.01.

PART 3--EXECUTION

3.01 INSTALLATION

Tracer tape shall be fastened to pipe and valves as recommended by the manufacturer at intervals not exceeding 1 foot. Insulation shall be provided in accordance with Section 15250 over the tracer tape.

3.02 TRACER TAPE SCHEDULE

Tracer tape shall be provided in accordance with the following schedule:

Piping system service	Piping diameter, inches	Thermostat setting, F	Tracer tape type	Thermostat type
1W, 2W, 3W	3 and smaller	40	1	B
NaOH	All	63	1	B

END OF SECTION

SECTION 15309

FIRE HYDRANTS

PART 1--GENERAL

1.01 DESCRIPTION

A. SCOPE:

This section specifies fire hydrants.

B. TYPE:

Fire hydrants provided under this section shall be two-piece standpipe and stem, compression shutoff, dry-barrel type.

1.02 QUALITY ASSURANCE

A. REFERENCES:

This section contains references to the following documents. They are a part of this section as specified and modified. Where a referenced document contains references to other standards, those documents are included as references under this section as if referenced directly. In the event of conflict between the requirements of this section and those of the listed documents, the requirements of this section shall prevail.

Unless otherwise specified, references to documents shall mean the documents in effect at the time of Advertisement for Bids or Invitation to Bid (or on the effective date of the Agreement if there were no Bids). If referenced documents have been discontinued by the issuing organization, references to those documents shall mean the replacement documents issued or otherwise identified by that organization or, if there are no replacement documents, the last version of the document before it was discontinued. Where document dates are given in the following listing, references to those documents shall mean the specific document version associated with that date, regardless of whether the document has been superseded by a version with a later date, discontinued or replaced.

Reference	Title
AWWA C502	Dry-Barrel Fire Hydrants
UL 246	Hydrants for Fire-Protection Service

B. DESIGN REQUIREMENTS:

Fire hydrants shall conform to AWWA C502 and shall be listed by Underwriters Laboratories Inc. in accordance with UL 246.

C. TESTING:

Fire hydrants shall meet the factory and field test provisions of AWWA C502.

PART 2--PRODUCTS

2.01 ACCEPTABLE PRODUCTS

Fire hydrants shall be Dresser, Kennedy, or equal, modified to meet specified requirements.

Fire hydrants shall be painted "fire hydrant red" in accordance with AWWA C502.

2.02 PRODUCT DATA

The following information shall be provided in accordance with Section 01300:

1. Affidavit of compliance with AWWA C502.

2. Records of standard tests.

PART 3--EXECUTION

Fire hydrants shall be installed in accordance with the drawings.

END OF SECTION

SECTION 15400

PLUMBING

PART 1--GENERAL

1.01 DESCRIPTION

This section specifies general requirements for plumbing systems.

1.02 QUALITY ASSURANCE

A. REFERENCES:

This section contains references to the following documents. They are a part of this section as specified and modified. Where a referenced document contains references to other standards, those documents are included as references under this section as if referenced directly. In the event of conflict between the requirements of this section and those of the listed documents, the requirements of this section shall prevail.

Unless otherwise specified, references to documents shall mean the documents in effect at the time of Advertisement for Bids or Invitation to Bid (or on the effective date of the Agreement if there were no Bids). If referenced documents have been discontinued by the issuing organization, references to those documents shall mean the replacement documents issued or otherwise identified by that organization or, if there are no replacement documents, the last version of the document before it was discontinued. Where document dates are given in the following listing, references to those documents shall mean the specific document version associated with that date, regardless of whether the document has been superseded by a version with a later date, discontinued or replaced.

Reference	Title
UPC (1988)	Uniform Plumbing Code

PART 2—PRODUCTS

2.01 INSTALLATION

A. GENERAL:

Work shall be in accordance with the Uniform Plumbing Code.

Plumbing shall be provided to avoid obstructions, allow 7.5-foot minimum headroom, and keep openings and passageways clear.

No holes shall be made in structural members.

Torn and pierced waterproofing shall be repaired.

Fixtures, fittings, valves, and copper and brass items shall be wrapped with burlap or building paper. Wrapping shall be removed at completion of the work.

B. VALVES AND ACCESSORIES:

Valves shall be provided upstream of branches, apparatus and fixtures.

Valves on branch lines and at distribution points shall be provided with a 2-inch heavy brass disc, stamped and stenciled with 1/4-inch high letters, stating portion of system controlled by valve. Valve locations shall be shown on record drawings. The Contractor shall provide a chart of location and use of main valves.

C. DIELECTRIC UNIONS:

Dielectric unions shall be provided at connections between pipe or fittings of different material.

D. ESCUTCHEONS:

Escutcheons shall be provided where pipes penetrate finished walls, ceilings or floors. Escutcheons shall be securely mounted allowing clearance for expansion.

E. PIPING:

Piping shall be carried in chases or recesses where provided in walls, through floors and partitions, and over ceilings. Unless otherwise specified, piping shall not be run in floor slabs.

Pipes shall not be supported by plumbing fixtures or equipment. Changes in pipe size shall be made with reducing fittings. The use of bushings is not acceptable.

Where galvanized steel pipe is calked into a cast iron hub, a soil pipe adapter shall be provided on the calked end of the steel pipe.

Unless otherwise specified, underground piping outside buildings shall have a minimum cover of 24 inches. Piping under buildings shall have a minimum clearance from structure of 12 inches.

Hot and cold water piping shall be separated by at least 6 inches.

END OF SECTION

SECTION 15408

DOMESTIC WATER PIPING SPECIALTIES

PART 1—GENERAL

1.01 DESCRIPTION

This section specifies commercial domestic water piping specialties.

1.02 QUALITY ASSURANCE

A. REFERENCES:

This section contains references to the following documents. They are a part of this section as specified and modified. Where a referenced document contains references to other standards, those documents are included as references under this section as if referenced directly. In the event of conflict between the requirements of this section and those of the listed documents, the requirements of this section shall prevail.

Unless otherwise specified, references to documents shall mean the documents in effect at the time of Advertisement for Bids or Invitation to Bid (or on the effective date of the Agreement if there were no Bids). If referenced documents have been discontinued by the issuing organization, references to those documents shall mean the replacement documents issued or otherwise identified by that organization or, if there are no replacement documents, the last version of the document before it was discontinued. Where document dates are given in the following listing, references to those documents shall mean the specific document version associated with that date, regardless of whether the document has been superseded by a version with a later date, discontinued or replaced.

Reference	Title
UPC	Uniform Plumbing Code

1.03 SUMMARY

This Section includes the following domestic water piping specialties:

1. Vacuum breakers.
2. Backflow preventers.
3. Water Pressure-Reducing Valves.
4. Temperature-actuated water mixing valves.
5. Strainers.
6. Hose bibbs.
7. Wall hydrants.
8. Drain valves.
9. Water hammer arresters.
10. Trap-seal primer valves.
11. Ice maker valve box

PART 2—PRODUCTS

2.01 VACUUM BREAKERS

A. PIPE-APPLIED, ATMOSPHERIC-TYPE VACUUM BREAKERS:

1. Available Manufacturers: Subject to compliance with requirements, manufacturers offering products that may be incorporated into the Work include, but are not limited to, the following:

   a. Ames Co.
   b. Cash Acme.
   c. Conbraco Industries, Inc.
   d. FEBCO; SPX Valves & Controls.
   e. Rain Bird Corporation.
   f. Toro Company (The); Irrigation Div.
   g. Watts Industries, Inc.; Water Products Div.
   h. Zurn Plumbing Products Group; Wilkins Div.

2. Standard: ASSE 1001.
3. Size: NPS 1/4 to NPS 3 (DN 8 to DN 80), as required to match connected piping.
4. Body: Bronze.
5. Inlet and Outlet Connections: Threaded.
6. Finish: Rough bronze.

B. HOSE-CONNECTION VACUUM BREAKERS:

1. Available Manufacturers: Subject to compliance with requirements, manufacturers offering products that may be incorporated into the Work include, but are not limited to, the following:

   a. Arrowhead Brass Products, Inc.
   b. Cash Acme.
   c. Conbraco Industries, Inc.
   d. Legend Valve.
   e. MIFAB, Inc.
   f. Prier Products, Inc.
   g. Watts Industries, Inc.; Water Products Div.
   h. Woodford Manufacturing Company.
   i. Zurn Plumbing Products Group; Light Commercial Operation.
   j. Zurn Plumbing Products Group; Wilkins Div.

2. Standard: ASSE 1001.
3. Body: Bronze, nonremovable, with manual drain.
4. Outlet Connection: Garden-hose threaded complying with ASME B1.20.7.
5. Finish: Rough bronze.

2.02 BACKFLOW PREVENTERS

A. DOUBLE-CHECK BACKFLOW-PREVENTION ASSEMBLIES:

1. Available Manufacturers: Subject to compliance with requirements, manufacturers offering products that may be incorporated into the Work include, but are not limited to, the following:

    a. Ames Co.
    b. Conbraco Industries, Inc.
    c. FEBCO; SPX Valves & Controls.
    d. Flomatic Corporation.
    e. Watts Industries, Inc.; Water Products Div.
    f. Zurn Plumbing Products Group; Wilkins Div.

2. Standard: ASSE 1015.
3. Operation: Continuous-pressure applications, unless otherwise indicated.
4. Pressure Loss: 5 psig (35 kPa) maximum, through middle 1/3 of flow range.
5. Body: Bronze for NPS 2 (DN 50) and smaller.
6. End Connections: Threaded for NPS 2 (DN 50) and smaller.
7. Configuration: Designed for horizontal, straight through flow.
8. Accessories:

    a. Valves: Ball type with threaded ends on inlet and outlet of NPS 2 (DN 50) and smaller.

2.03 WATER PRESSURE-REDUCING VALVES

A. WATER REGULATORS:

1. Available Manufacturers: Subject to compliance with requirements, manufacturers offering products that may be incorporated into the Work include, but are not limited to, the following:

    a. Ames Co.
    b. FEBCO.
    c. J.R. Smith Company
    d. Watts Industries, Inc.; Water Products Div.
    e. Zurn Plumbing Products Group; Wilkins Div.

2. Standard: ASSE 1003.
3. Pressure Rating: Initial working pressure of 150 psig (1035 kPa).
4. Body: Bronze for NPS 2 (DN 50) and smaller; cast iron with interior lining complying with AWWA C550 or that is FDA approved for NPS 2-1/2 and NPS 3 (DN 65 and DN 80).
5. End Connections: Threaded for NPS 2 (DN 50) and smaller; flanged for NPS 2-1/2 and NPS 3 (DN 65 and DN 80).

2.04 TEMPERATURE-ACTUATED WATER MIXING VALVES

A. PRIMARY, THERMOSTATIC, WATER MIXING VALVES:

1. Available Manufacturers: Subject to compliance with requirements, manufacturers offering products that may be incorporated into the Work include, but are not limited to, the following:

    a. Armstrong International, Inc.
    b. Lawler Manufacturing Company, Inc.
    c. Leonard Valve Company.
    d. Powers; a Watts Industries Co.
    e. Symmons Industries, Inc.

2. Standard: ASSE 1017.
3. Pressure Rating: 125 psig (860 kPa).
4. Type: Exposed-mounting, thermostatically controlled water mixing valve.
5. Material: Bronze body with corrosion-resistant interior components.
6. Connections: Threaded or union inlets and outlet.
7. Accessories: Manual temperature control, check stops on hot- and cold-water supplies, and adjustable, temperature-control handle.
8. Valve Pressure Rating: 125 psig (860 kPa) minimum, unless otherwise indicated.
9. Tempered-Water Setting: 110 degrees F
10. Tempered-Water Design Flow Rate: 15 gpm
11. Selected Valve Flow Rate at 45-psig (310-kPa) Pressure Drop: 1 gpm
12. Valve Finish: Rough bronze
13. Piping Finish: Chrome plated or Copper

2.05 STRAINERS FOR DOMESTIC WATER PIPING

A. Y-PATTERN STRAINERS:

1. Pressure Rating: 125 psig (860 kPa) minimum, unless otherwise indicated.
2. Body: Bronze for NPS 2 (DN 50) and smaller; cast iron with interior lining complying with AWWA C550 or FDA-approved, epoxy coating and for NPS 2-1/2 (DN 65) and larger.
3. End Connections: Threaded for NPS 2 (DN 50) and smaller; flanged for NPS 2-1/2 (DN 65) and larger.
4. Screen: Stainless steel with round perforations, unless otherwise indicated.
5. Perforation Size:

    a. Strainers NPS 2 (DN 50) and Smaller: 0.020 inch (0.51 mm)
    b. Strainers NPS 2-1/2 to NPS 4 (DN 65 to DN 100): 0.045 inch (1.14 mm

6. Drain: Pipe plug or Factory-installed, hose-end drain valve.

2.06 HOSE BIBBS

A. HOSE BIBBS:

1. Standard: ASME A112.18.1 for sediment faucets.
2. Body Material: Bronze.
3. Seat: Bronze, replaceable.
4. Supply Connections: NPS 3/4 (DN 15 or DN 20) threaded or solder-joint inlet.
5. Outlet Connection: Garden-hose thread complying with ASME B1.20.7.
6. Pressure Rating: 125 psig (860 kPa).
7. Vacuum Breaker: Integral or field-installation, nonremovable, drainable, hose-connection vacuum breaker complying with ASSE 1011.
8. Finish for Equipment Rooms: Rough bronze, or chrome or nickel plated.
9. Finish for Service Areas: Rough bronze
10. Finish for Finished Rooms: Chrome or nickel plated.
11. Operation for Equipment Rooms: Wheel handle or operating key.
12. Operation for Service Areas: Wheel handle or Operating key
13. Operation for Finished Rooms: Wheel handle or Operating key
14. Include operating key with each operating-key hose bibb.

2.07 WALL HYDRANTS

A. NONFREEZE WALL HYDRANTS:

1. Available Manufacturers: Subject to compliance with requirements, manufacturers offering products that may be incorporated into the Work include, but are not limited to, the following:

    a. Josam Company.
    b. MIFAB, Inc.
    c. Prier Products, Inc.
    d. Smith, Jay R. Mfg. Co.; Division of Smith Industries, Inc.
    e. Tyler Pipe; Wade Div.
    f. Watts Drainage Products Inc.
    g. Woodford Manufacturing Company.
    h. Zurn Plumbing Products Group; Light Commercial Operation.
    i. Zurn Plumbing Products Group; Specification Drainage Operation.

2. Standard: ASME A112.21.3M for expose]-outlet, self-draining wall hydrants.
3. Pressure Rating: 125 psig (860 kPa).
4. Operation: Loose key.
5. Casing and Operating Rod: Of length required to match wall thickness. Include wall clamp.
6. Inlet: NPS 3/4 or NPS 1 (DN 20 or DN 25).
7. Outlet: Concealed, with integral vacuum breaker and garden-hose thread complying with ASME B1.20.7.
8. Box: Deep, flush mounting with cover.
9. Box and Cover Finish: Polished nickel bronze

10. Outlet: Exposed, with integral vacuum breaker and garden-hose thread complying with ASME B1.20.7.
11. Nozzle and Wall-Plate Finish: Polished nickel bronze
12. Operating Keys(s): Two with each wall hydrant.

2.08 DRAIN VALVES

A. BALL-VALVE-TYPE, HOSE-END DRAIN VALVES:

1. Standard: MSS SP-110 for standard-port, two-piece ball valves.
2. Pressure Rating: 400-psig (2760-kPa) minimum CWP.
3. Size: NPS 3/4 (DN 20).
4. Body: Copper alloy.
5. Ball: Chrome-plated brass.
6. Seats and Seals: Replaceable.
7. Handle: Vinyl-covered steel.
8. Inlet: Threaded or solder joint.
9. Outlet: Threaded, short nipple with garden-hose thread complying with ASME B1.20.7 and cap with brass chain.

2.09 WATER HAMMER ARRESTERS

A. WATER HAMMER ARRESTERS:

1. Available Manufacturers: Subject to compliance with requirements, manufacturers offering products that may be incorporated into the Work include, but are not limited to, the following:

   a. AMTROL, Inc.
   b. Josam Company.
   c. MIFAB, Inc.
   d. PPP Inc.
   e. Sioux Chief Manufacturing Company, Inc.
   f. Smith, Jay R. Mfg. Co.; Division of Smith Industries, Inc.
   g. Tyler Pipe; Wade Div.
   h. Watts Drainage Products Inc.
   i. Zurn Plumbing Products Group; Specification Drainage Operation.

2. Standard: ASSE 1010 or PDI-WH 201.
3. Type: Metal bellows or Copper tube with piston.
4. Size: ASSE 1010, Sizes AA and A through F or PDI-WH 201, Sizes A through F.

2.10 TRAP-SEAL PRIMER VALVES

A. SUPPLY-TYPE, TRAP-SEAL PRIMER VALVES:

1. Available Manufacturers: Subject to compliance with requirements, manufacturers offering products that may be incorporated into the Work include, but are not limited to, the following:

a. MIFAB, Inc.
b. PPP Inc.
c. Sioux Chief Manufacturing Company, Inc.
d. Smith, Jay R. Mfg. Co.; Division of Smith Industries, Inc.
e. Watts Industries, Inc.; Water Products Div.

2. Standard: ASSE 1018.
3. Pressure Rating: 125 psig (860 kPa) minimum.
4. Body: Bronze.
5. Inlet and Outlet Connections: NPS 1/2 (DN 15) threaded, union, or solder joint.
6. Gravity Drain Outlet Connection: NPS 1/2 (DN 15) threaded or solder joint.
7. Finish: Chrome plated, or rough bronze for units used with pipe or tube that is not chrome finished.

2.11 ICE MAKER VALVE BOX

A. PLASTIC-TYPE, ICE MAKER VALVE BOX FOR REFRIGERATOR OR ICE MAKER:

1. Available Manufacturers: Subject to compliance with requirements, manufacturers offering products that may be incorporated into the Work include, but are not limited to, the following:

a. Guy Gray Company
b. Oatey Company
c. PPP Inc.
d. Sioux Chief Manufacturing Company, Inc.
e. Watts Industries, Inc.; Water Products Div.

2. Pressure Rating: 100 psig (860 kPa) minimum.
3. Body: Plastic
4. Inlet Connections: NPS 1/2 or MPS 3/8 threaded, union, or solder joint.

PART 3—EXECUTION

3.01 INSTALLATION

1. Install backflow preventers in each water supply to mechanical equipment and systems and to other equipment and water systems that may be sources of contamination. Comply with authorities having jurisdiction.

a. Install drain for backflow preventers with atmospheric-vent drain connection with air-gap fitting, fixed air-gap fitting, or equivalent positive pipe separation of at least two pipe diameters in drain piping and pipe to floor drain. Locate air-gap device attached to or

under backflow preventer. Simple air breaks are not acceptable for this application.

b. Do not install bypass piping around backflow preventers.

2. Install water regulators with inlet and outlet shutoff valves and bypass with memory-stop balancing valve. Install pressure gages on inlet and outlet.
3. Install temperature-actuated water mixing valves with check stops or shutoff valves on inlets and with shutoff valve on outlet.

   a. Install thermometers and water regulators if specified.

4. Install Y-pattern strainers for water on supply side of each water pressure-reducing valve.
5. Install water hammer arresters in water piping according to PDI-WH 201.
6. Install supply-type, trap-seal primer valves with outlet piping pitched down toward drain trap a minimum of 1 percent, and connect to floor-drain body, trap, or inlet fitting. Adjust valve for proper flow.
7. Equipment Nameplates and Signs: Install engraved plastic-laminate equipment nameplate or sign on or near each of the following:

   a. Double-check backflow-prevention assemblies.
   b. Water pressure-reducing valves.
   c. Primary, thermostatic, water mixing valves.
   d. Supply-type, trap-seal primer valves.

8. Distinguish among multiple units, inform operator of operational requirements, indicate safety and emergency precautions, and warn of hazards and improper operations, in addition to identifying unit.

3.02 FIELD QUALITY CONTROL

1. Perform the following tests and prepare test reports:

   a. Test each double-check backflow-prevention assembly according to authorities having jurisdiction and the device's reference standard.

2. Remove and replace malfunctioning domestic water piping specialties and retest as specified above.

3.03 ADJUSTING

1. Set field-adjustable pressure set points of water pressure-reducing valves.
2. Set field-adjustable temperature set points of temperature-actuated water mixing valves.

END OF SECTION

SECTION 15410

SANITARY WASTE PIPING SPECIALTIES

PART 1—GENERAL

1.01 DESCRIPTION

This section specifies commercial sanitary waste piping specialties.

1.02 QUALITY ASSURANCE

A. REFERENCES:

This section contains references to the following documents. They are a part of this section as specified and modified. Where a referenced document contains references to other standards, those documents are included as references under this section as if referenced directly. In the event of conflict between the requirements of this section and those of the listed documents, the requirements of this section shall prevail.

Unless otherwise specified, references to documents shall mean the documents in effect at the time of Advertisement for Bids or Invitation to Bid (or on the effective date of the Agreement if there were no Bids). If referenced documents have been discontinued by the issuing organization, references to those documents shall mean the replacement documents issued or otherwise identified by that organization or, if there are no replacement documents, the last version of the document before it was discontinued. Where document dates are given in the following listing, references to those documents shall mean the specific document version associated with that date, regardless of whether the document has been superseded by a version with a later date, discontinued or replaced.

Reference	Title
UPC	Uniform Plumbing Code

PART 2—PRODUCTS

2.01 CLEANOUTS

A. EXPOSED CAST-IRON CLEANOUTS:

1. Available Manufacturers: Subject to compliance with requirements, manufacturers offering products that may be incorporated into the Work include, but are not limited to, the following:

   a. Josam Company; Josam Div.
   b. MIFAB, Inc.
   c. Smith, Jay R. Mfg. Co.; Division of Smith Industries, Inc.
   d. Tyler Pipe; Wade Div.
   e. Watts Drainage Products Inc.
   f. Zurn Plumbing Products Group; Specification Drainage Operation.

2. Standard: ASME A112.36.2M for cast iron for cleanout test tee.
3. Size: Same as connected drainage piping
4. Body Material: Hub-and-spigot, cast-iron soil pipe T-branch or Hubless, cast-iron soil pipe test tee as required to match connected piping.
5. Closure: Countersunk, cast-iron plug.
6. Closure Plug Size: Same as or not more than one size smaller than cleanout size.

B. CAST-IRON FLOOR CLEANOUTS:

1. Available Manufacturers: Subject to compliance with requirements, manufacturers offering products that may be incorporated into the Work include, but are not limited to, the following:

   a. Josam Company; Josam Div.
   b. Oatey.
   c. Sioux Chief Manufacturing Company, Inc.
   d. Smith, Jay R. Mfg. Co.; Division of Smith Industries, Inc.
   e. Tyler Pipe; Wade Div.
   f. Watts Drainage Products Inc.
   g. Zurn Plumbing Products Group; Light Commercial Operation.
   h. Zurn Plumbing Products Group; Specification Drainage Operation.

2. Standard: ASME A112.36.2M for heavy-duty, adjustable housing cleanout.
3. Size: Same as connected branch.
4. Type: Heavy-duty, adjustable housing.
5. Body or Ferrule: Cast iron.
6. Clamping Device: Required.
7. Outlet Connection: Inside calk or Threaded.
8. Closure: Brass plug with straight threads and gasket.
9. Adjustable Housing Material: Cast iron with threads, set-screws or other device.
10. Frame and Cover Material and Finish: Rough bronze.
11. Frame and Cover Shape: Round.
12. Top Loading Classification: Extra Heavy Duty.
13. Riser: ASTM A 74, Extra-Heavy class, cast-iron drainage pipe fitting and riser to cleanout.

C. CAST-IRON WALL CLEANOUTS:

1. Available Manufacturers: Subject to compliance with requirements, manufacturers offering products that may be incorporated into the Work include, but are not limited to, the following:

   a. Josam Company; Josam Div.
   b. MIFAB, Inc.
   c. Smith, Jay R. Mfg. Co.; Division of Smith Industries, Inc.
   d. Tyler Pipe; Wade Div.

e. Watts Drainage Products Inc.
f. Zurn Plumbing Products Group; Specification Drainage Operation.

2. Standard: ASME A112.36.2M. Include wall access.
3. Size: Same as connected drainage piping.
4. Body: Hub-and-spigot, cast-iron soil pipe T-branch or Hubless, cast-iron soil pipe test tee as required to match connected piping.
5. Closure: Countersunk cast-iron plug.
6. Closure Plug Size: Same as or not more than one size smaller than cleanout size.

2.02 FLOOR DRAINS

A. CAST-IRON FLOOR DRAINS:

1. Available Manufacturers: Subject to compliance with requirements, manufacturers offering products that may be incorporated into the Work include, but are not limited to, the following:

   a. Commercial Enameling Co.
   b. Josam Company; Josam Div.
   c. MIFAB, Inc.
   d. Prier Products, Inc.
   e. Smith, Jay R. Mfg. Co.; Division of Smith Industries, Inc.
   f. Tyler Pipe; Wade Div.
   g. Watts Drainage Products Inc.
   h. Zurn Plumbing Products Group; Light Commercial Operation.
   i. Zurn Plumbing Products Group; Specification Drainage Operation.

2. Standard: ASME A112.6.3.
3. Pattern: Floor drain.
4. Body Material: Gray iron.
5. Seepage Flange: Required.
6. Anchor Flange: Not required
7. Clamping Device: Required]
8. Outlet: Bottom
9. Top or Strainer Material: Bronze.
10. Top of Body and Strainer Finish: Nickel bronze
11. Top Shape: Round
12. Top Loading Classification: Medium Duty
13. Trap Material: Bronze or Cast iron
14. Trap Pattern: Deep-seal P-trap

2.03 ROOF FLASHING ASSEMBLIES

A. ROOF FLASHING ASSEMBLIES:

1. Available Manufacturers: Subject to compliance with requirements, manufacturers offering products that may be incorporated into the Work include, but are not limited to, the following:

a. Acorn Engineering Company; Elmdor/Stoneman Div.
b. Thaler Metal Industries Ltd.

B. DESCRIPTION:

Manufactured assembly made of 4.0-lb/sq. ft. (20-kg/sq. m), 0.0625-inch- (1.6-mm-) thick, lead flashing collar and skirt extending at least 8 inches (200 mm) from pipe, with galvanized-steel boot reinforcement and counterflashing fitting.

1. Open-Top Vent Cap: Without cap.

2.04 FLASHING MATERIALS

A. LEAD SHEET:

ASTM B 749, Type L51121, copper bearing, with the following minimum weights and thicknesses, unless otherwise indicated:

1. General Use: 4.0-lb/sq. ft. (20-kg/sq. m), 0.0625-inch (1.6-mm) thickness.
2. Vent Pipe Flashing: 3.0-lb/sq. ft. (15-kg/sq. m), 0.0469-inch (1.2-mm) thickness.
3. Burning: 6-lb/sq. ft. (30-kg/sq. m), 0.0938-inch (2.4-mm) thickness.

B. FASTENERS:

Metal compatible with material and substrate being fastened.

C. METAL ACCESSORIES:

Sheet metal strips, clamps, anchoring devices, and similar accessory units required for installation; matching or compatible with material being installed.

D. SOLDER:

ASTM B 32, lead-free alloy.

PART 3—EXECUTION

3.01 INSTALLATION

Install backwater valves in building drain piping. For interior installation, provide cleanout deck plate flush with floor and centered over backwater valve cover, and of adequate size to remove valve cover for servicing.

Install cleanouts in aboveground piping and building drain piping according to the following, unless otherwise indicated:

1. Size same as drainage piping up to NPS 4 (DN 100). Use NPS 4 (DN 100) for larger drainage piping unless larger cleanout is indicated.
2. Locate at each change in direction of piping greater than 45 degrees.
3. Locate at minimum intervals of 50 feet (15 m) for piping NPS 4 (DN 100) and smaller and 100 feet (30 m) for larger piping.
4. Locate at base of each vertical soil and waste stack.

For floor cleanouts for piping below floors, install cleanout deck plates with top flush with finished floor.

Install floor drains at low points of surface areas to be drained. Set grates of drains flush with finished floor, unless otherwise indicated.

1. Position floor drains for easy access and maintenance.
2. Set floor drains below elevation of surrounding finished floor to allow floor drainage. Set with grates depressed according to the following drainage area radii:

    a. Radius, 30 Inches (750 mm) or Less: Equivalent to 1 percent slope, but not less than 1/4-inch (6.35-mm) total depression.

3. Install floor-drain flashing collar or flange so no leakage occurs between drain and adjoining flooring. Maintain integrity of waterproof membranes where penetrated.
4. Install individual traps for floor drains connected to sanitary building drain, unless otherwise indicated.

Install roof flashing assemblies on sanitary stack vents and vent stacks that extend through roof.

Install deep-seal traps on floor drains and other waste outlets, if indicated.

Install air-gap fittings on draining-type backflow preventers and on indirect-waste piping discharge into sanitary drainage system.

Install sleeve flashing device with each riser and stack passing through floors with waterproof membrane.

Install traps on plumbing specialty drain outlets. Omit traps on indirect wastes unless trap is indicated.

3.02 FLASHING INSTALLATION

Fabricate flashing from single piece unless large pans, sumps, or other drainage shapes are required. Join flashing according to the following if required:

1. Lead Sheets: Burn joints of lead sheets 6.0-lb/sq. ft. (30-kg/sq. m), 0.0938-inch (2.4-mm) thickness or thicker. Solder joints of lead sheets 4.0-lb/sq. ft. (20-kg/sq. m), 0.0625-inch (1.6-mm) thickness or thinner.

Install sheet flashing on pipes, sleeves, and specialties passing through or embedded in floors and roofs with waterproof membrane.

1. Pipe Flashing: Sleeve type, matching pipe size, with minimum length of 10 inches (250 mm), and skirt or flange extending at least 8 inches (200 mm) around pipe.

2. Sleeve Flashing: Flat sheet, with skirt or flange extending at least 8 inches (200 mm) around sleeve.

3. Embedded Specialty Flashing: Flat sheet, with skirt or flange extending at least 8 inches (200 mm) around specialty.

Set flashing on floors and roofs in solid coating of bituminous cement.

Secure flashing into sleeve and specialty clamping ring or device.

Extend flashing up vent pipe passing through roofs and turn down into pipe, or secure flashing into cast-iron sleeve having calking recess.

3.03 LABELING AND IDENTIFYING

Distinguish among multiple units, inform operator of operational requirements, indicate safety and emergency precautions, and warn of hazards and improper operations, in addition to identifying unit.

3.04 PROTECTION

Protect drains during remainder of construction period to avoid clogging with dirt or debris and to prevent damage from traffic or construction work.

Place plugs in ends of uncompleted piping at end of each day or when work stops.

END OF SECTION

SECTION 15412

STORM DRAINAGE PIPING SPECIALTIES

PART 1—GENERAL

1.01 DESCRIPTION

This section specifies commercial storm drainage piping specialties.

1.02 QUALITY ASSURANCE

A. REFERENCES:

This section contains references to the following documents. They are a part of this section as specified and modified. Where a referenced document contains references to other standards, those documents are included as references under this section as if referenced directly. In the event of conflict between the requirements of this section and those of the listed documents, the requirements of this section shall prevail.

Unless otherwise specified, references to documents shall mean the documents in effect at the time of Advertisement for Bids or Invitation to Bid (or on the effective date of the Agreement if there were no Bids). If referenced documents have been discontinued by the issuing organization, references to those documents shall mean the replacement documents issued or otherwise identified by that organization or, if there are no replacement documents, the last version of the document before it was discontinued. Where document dates are given in the following listing, references to those documents shall mean the specific document version associated with that date, regardless of whether the document has been superseded by a version with a later date, discontinued or replaced.

Reference	Title
UPC	Uniform Plumbing Code

PART 2—PRODUCTS

2.01 METAL ROOF DRAINS

A. CAST-IRON, LARGE-SUMP, GENERAL-PURPOSE ROOF DRAINS:

1. Standard: ASME A112.6.4, for general-purpose roof drains.
2. Body Material: Cast iron.
3. Dimension of Body: Nominal 14 to 12.5 inches diameter.
4. Outlet: Bottom
5. Underdeck Clamp: Required
6. Dome Material: Aluminum or Cast iron

2.02 CLEANOUTS

A. TEST TEES:

1. Standard: ASME A112.36.2M and ASTM A 74, ASTM A 888, or CISPI 301, for cleanout test tees.
2. Size: Same as connected drainage piping.
3. Body Material: Hub-and-spigot, cast-iron soil-pipe T-branch or hubless, cast-iron soil-pipe test tee as required to match connected piping.
4. Closure Plug: Countersunk, brass.
5. Closure Plug Size: Same as or not more than one size smaller than cleanout size.

B. WALL CLEANOUTS:

1. Standard: ASME A112.36.2M, for cleanouts. Include wall access.
2. Size: Same as connected drainage piping.
3. Body Material: Hub-and-spigot, cast-iron soil-pipe T-branch or Hubless, cast-iron soil-pipe test tee as required to match connected piping.
4. Closure: Countersunk, cast iron plug.
5. Closure Plug Size: Same as or not more than one size smaller than cleanout size.
6. Wall Access: Round, nickel-bronze, copper-alloy, or stainless-steel wall-installation frame and cover.

2.03 FLASHING MATERIALS

1. Copper Sheet: ASTM B 152/B 152M, 12 oz./sq. ft. (3.7 kg/sq. m or 0.41-mm thickness).
2. Zinc-Coated Steel Sheet: ASTM A 653/A 653M, with 0.20 percent copper content and 0.04-inch (1.01-mm) minimum thickness unless otherwise indicated. Include G90 (Z275) hot-dip galvanized, mill-phosphatized finish for painting if indicated.
3. Elastic Membrane Sheet: ASTM D 4068, flexible, chlorinated polyethylene, 40-mil (1.01-mm) minimum thickness.
4. Fasteners: Metal compatible with material and substrate being fastened.
5. Metal Accessories: Sheet metal strips, clamps, anchoring devices, and similar accessory units required for installation; matching or compatible with material being installed.
6. Solder: ASTM B 32, lead-free alloy.

PART 3—EXECUTION

3.01 INSTALLATION

Install roof drains at low points of roof areas according to roof membrane manufacturer's written installation instructions. Roofing materials are specified in Division 7 Sections.

1. Install flashing collar or flange of roof drain to prevent leakage between drain and adjoining roofing. Maintain integrity of waterproof membranes where penetrated.
2. Position roof drains for easy access and maintenance.

Install cleanouts in aboveground piping and building drain piping according to the following instructions unless otherwise indicated:

1. Use cleanouts the same size as drainage piping up to NPS 4 (DN 100). Use NPS 4 (DN 100) for larger drainage piping unless larger cleanout is indicated.
2. Locate cleanouts at each change in direction of piping greater than 45 degrees.
3. Locate cleanouts at minimum intervals of 50 feet (15 m) for piping NPS 4 (DN 100) and smaller and 100 feet (30 m) for larger piping.
4. Locate cleanouts at base of each vertical soil and waste stack.

For floor cleanouts for piping below floors, install cleanout deck plates with top flush with finished floor.

Install wall cleanouts in vertical conductors.

Install sleeve flashing device with each conductor passing through floors with waterproof membrane.

3.02 FLASHING INSTALLATION

Fabricate flashing from single piece of metal unless large pans, sumps, or other drainage shapes are required. Join flashing according to the following if required:

1. Lead Sheets: Burn joints of 6.0-lb/sq. ft. (30-kg/sq. m) lead sheets, 0.0938-inch (2.4-mm) thickness or thicker. Solder joints of 4.0-lb/sq. ft. (20-kg/sq. m) lead sheets, 0.0625-inch (1.6-mm) thickness or thinner.
2. Copper Sheets: Solder joints of copper sheets.

Install sheet flashing on pipes, sleeves, and specialties passing through or embedded in floors and roofs with waterproof membrane.

1. Pipe Flashing: Sleeve type, matching the pipe size, with a minimum length of 10 inches (250 mm) and with skirt or flange extending at least 8 inches (200 mm) around pipe.
2. Sleeve Flashing: Flat sheet, with skirt or flange extending at least 8 inches (200 mm) around sleeve.
3. Embedded Specialty Flashing: Flat sheet, with skirt or flange extending at least 8 inches (200 mm) around specialty.

Set flashing on floors and roofs in solid coating of bituminous cement.

Secure flashing into sleeve and specialty clamping ring or device.

Fabricate and install flashing and pans, sumps, and other drainage shapes.

3.03 PROTECTION

Protect drains during remainder of construction period to avoid clogging with dirt or debris and to prevent damage from traffic or construction work.

Place plugs in ends of uncompleted piping at end of each day or when work stops.

END OF SECTION

SECTION 15414

ESCUTCHEONS FOR PLUMBING PIPING

PART 1—GENERAL

1.01 DESCRIPTION

This section specifies escutcheons for plumbing piping.

1.02 QUALITY ASSURANCE

A. WORK:

B. REFERENCES:

This section contains references to the following documents. They are a part of this section as specified and modified. Where a referenced document contains references to other standards, those documents are included as references under this section as if referenced directly. In the event of conflict between the requirements of this section and those of the listed documents, the requirements of this section shall prevail.

Unless otherwise specified, references to documents shall mean the documents in effect at the time of Advertisement for Bids or Invitation to Bid (or on the effective date of the Agreement if there were no Bids). If referenced documents have been discontinued by the issuing organization, references to those documents shall mean the replacement documents issued or otherwise identified by that organization or, if there are no replacement documents, the last version of the document before it was discontinued. Where document dates are given in the following listing, references to those documents shall mean the specific document version associated with that date, regardless of whether the document has been superseded by a version with a later date, discontinued or replaced.

Reference	Title
UPC	Uniform Plumbing Code

PART 2—PRODUCTS

2.01 ESCUTCHEONS

One-Piece, Cast-Brass Type: With polished, chrome-plated and rough-brass finish and setscrew fastener.

2.02 FLOOR PLATES

One-Piece Floor Plates: Cast-iron flange with holes for fasteners.

PART 3—EXECUTION

3.01 INSTALLATION

Install escutcheons for piping penetrations of walls, ceilings, and finished floors.

Install escutcheons with ID to closely fit around pipe, tube, and insulation of piping and with OD that completely covers opening.

1. Escutcheons for New Piping:

    a. Piping with Fitting or Sleeve Protruding from Wall: One-piece, deep-pattern type.
    b. Chrome-Plated Piping: One-piece, cast-brass type with polished, chrome-plated finish.
    c. Insulated Piping: One-piece, stamped-steel type.
    d. Bare Piping at Wall and Floor Penetrations in Finished Spaces: One-piece, stamped-steel type.
    e. Bare Piping at Ceiling Penetrations in Finished Spaces: One-piece, stamped-steel type.
    f. Bare Piping in Unfinished Service Spaces: One-piece, stamped-steel type.
    g. Bare Piping in Equipment Rooms: One-piece, cast-brass type with polished, chrome-plated or rough-brass finish.
    h. Bare Piping in Equipment Rooms: One-piece, stamped-steel type.

Install floor plates for piping penetrations of equipment-room floors.

Install floor plates with ID to closely fit around pipe, tube, and insulation of piping and with OD that completely covers opening.

1. New Piping: One-piece, floor-plate type.

3.02 FIELD QUALITY CONTROL

Replace broken and damaged escutcheons and floor plates using new materials.

END OF SECTION

SECTION 15416

COMMERCIAL WATER CLOSETS

PART 1—GENERAL

1.01 DESCRIPTION

This section specifies commercial floor-mounted flush valve water closets.

1.02 QUALITY ASSURANCE

A. REFERENCES:

This section contains references to the following documents. They are a part of this section as specified and modified. Where a referenced document contains references to other standards, those documents are included as references under this section as if referenced directly. In the event of conflict between the requirements of this section and those of the listed documents, the requirements of this section shall prevail.

Unless otherwise specified, references to documents shall mean the documents in effect at the time of Advertisement for Bids or Invitation to Bid (or on the effective date of the Agreement if there were no Bids). If referenced documents have been discontinued by the issuing organization, references to those documents shall mean the replacement documents issued or otherwise identified by that organization or, if there are no replacement documents, the last version of the document before it was discontinued. Where document dates are given in the following listing, references to those documents shall mean the specific document version associated with that date, regardless of whether the document has been superseded by a version with a later date, discontinued or replaced.

Reference	Title
UPC	Uniform Plumbing Code

PART 2—PRODUCTS

2.01 FLOOR-MOUNTED, BOTTOM-OUTLET WATER CLOSETS

A. WATER CLOSETS:

(WC) Floor mounted, bottom outlet, top spud.

1. Manufacturers: Subject to compliance with requirements, available manufacturers offering products that may be incorporated into the Work include, but are not limited to, the following:

   a. Crane Plumbing, L.L.C. (Model 3H701)
   b. Kohler Co. (Model K 4405-0)

c. Zurn Industries, LLC; Commercial Brass and Fixtures. (Model 25665-BWL)

2. Bowl:

a. Standards: ASME A112.19.2/CSA B45.1 and ASME A112.19.5.
b. Material: Vitreous china.
c. Type: Siphon jet.
d. Style: Flushometer valve.
e. Height: Standard.
f. Rim Contour: Elongated.
g. Water Consumption: 1.28 gal. (4.8 L) per flush.
h. Spud Size and Location: NPS 1-1/2 (DN 40); top.
i. Color: White.

3. Bowl-to-Drain Connecting Fitting: ASTM A 1045 or ASME A112.4.3.
4. Flushometer Valve: Manual lever-handle, diaphragm type.
5. Toilet Seat: White Elongated, open front.

2.02 FLUSHOMETER VALVES

A. LEVER-HANDLE, DIAPHRAGM FLUSHOMETER VALVES:

1. Manufacturers: Subject to compliance with requirements, available manufacturers offering products that may be incorporated into the Work include, but are not limited to, the following:

a. Kohler Company (Model K-13517-CP)
b. Sloan Valve Company. (Model 111-1.28)
c. Zurn Industries, LLC; Commercial Brass and Fixtures. (Model Z6000AV-HET)

2. Standard: ASSE 1037.
3. Minimum Pressure Rating: 125 psig (860 kPa).
4. Features: Include integral check stop and backflow-prevention device.
5. Material: Brass body with corrosion-resistant components.
6. Exposed Flushometer-Valve Finish: Chrome plated.
7. Panel Finish: Chrome plated or stainless steel.
8. Style: Exposed
9. Consumption: 1.28 gal. (4.8 L) per flush.
10. Minimum Inlet: NPS 1 (DN 25).
11. Minimum Outlet: NPS 1-1/4 (DN 32).

2.03 TOILET SEATS

A. TOILET SEATS:

1. Manufacturers: Subject to compliance with requirements, available manufacturers offering products that may be incorporated into the Work include, but are not limited to, the following:

a. Bemis Manufacturing Company (Model 1655CT)
b. Kohler Co. (Model H-4666-C-O)
c. Zurn Industries, LLC (Model Z-5956)

2. Standard: IAPMO/ANSI Z124.5.
3. Material: Plastic.
4. Type: Commercial (Heavy duty).
5. Shape: Elongated rim, open front.
6. Hinge: Self-sustaining, check.
7. Hinge Material: Noncorroding metal.
8. Seat Cover: Not required.
9. Color: White.

PART 3—EXECUTION

3.01 INSTALLATION

A. WATER-CLOSET INSTALLATION:

1. Install level and plumb according to roughing-in drawings.
2. Install floor-mounted water closets on bowl-to-drain connecting fitting attachments to piping or building substrate.

B. SUPPORT INSTALLATION:

1. Install supports, affixed to building substrate, for floor-mounted, back-outlet water closets.
2. Use carrier supports with waste-fitting assembly and seal.

C. FLUSHOMETER-VALVE INSTALLATION:

1. Install flushometer-valve, water-supply fitting on each supply to each water closet.
2. Attach supply piping to supports or substrate within pipe spaces behind fixtures.
3. Install toilet seats on water closets.

D. WALL FLANGE AND ESCUTCHEON INSTALLATION:

1. Install wall flanges or escutcheons at piping wall penetrations in exposed, finished locations and within cabinets and millwork.
2. Install deep-pattern escutcheons if required to conceal protruding fittings.

E. JOINT SEALING:

1. Seal joints between water closets and walls and floors using sanitary-type, one-part, mildew-resistant silicone sealant.
2. Match sealant color to water-closet color.

3.02 CONNECTIONS

Connect water closets with water supplies and soil, waste, and vent piping. Use size fittings required to match water closets.

Where installing piping adjacent to water closets, allow space for service and maintenance.

3.03 ADJUSTING

Operate and adjust water closets and controls. Replace damaged and malfunctioning water closets, fittings, and controls.

Adjust water pressure at flushometer valves to produce proper flow.

3.04 CLEANING AND PROTECTION

Clean water closets and fittings with manufacturers' recommended cleaning methods and materials.

Install protective covering for installed water closets and fittings. Do not allow use of water closets for temporary facilities unless approved in writing by Owner. See Editing Instruction No. 2 in the Evaluations for cautions about combinations of fixture components.

END OF SECTION

SECTION 15418

COMMERCIAL LAVATORIES

PART 1—GENERAL

1.01 DESCRIPTION

This section specifies commercial under-mounted lavatories and faucets.

1.02 QUALITY ASSURANCE

A. REFERENCES:

This section contains references to the following documents. They are a part of this section as specified and modified. Where a referenced document contains references to other standards, those documents are included as references under this section as if referenced directly. In the event of conflict between the requirements of this section and those of the listed documents, the requirements of this section shall prevail.

Unless otherwise specified, references to documents shall mean the documents in effect at the time of Advertisement for Bids or Invitation to Bid (or on the effective date of the Agreement if there were no Bids). If referenced documents have been discontinued by the issuing organization, references to those documents shall mean the replacement documents issued or otherwise identified by that organization or, if there are no replacement documents, the last version of the document before it was discontinued. Where document dates are given in the following listing, references to those documents shall mean the specific document version associated with that date, regardless of whether the document has been superseded by a version with a later date, discontinued or replaced.

Reference	Title
UPC	Uniform Plumbing Code

PART 2—PRODUCTS

2.01 LAVATORY

Oval, stainless steel, undercounter mounted, ADA.

1. Manufacturers: Subject to compliance with requirements, available manufacturers offering products that may be incorporated into the Work include, but are not limited to, the following:

   a. Elkay Manufacturing (Model ELUH 1511)
   b. Kohler Co. (Model K-2608-NA)
   c. Houzer (Model CH-1800-1)

2. Fixture:

a. Standard: ASME A112.19.2/CSA B45.1.
b. Type: For undercounter mounting.
c. Nominal Size: Oval (Coordinate exact size with countertop before installation)
d. Faucet-Hole Location: On countertop.
e. Color: Stainless Steel
f. Mounting Material: Sealant and undercounter mounting kit.

3. Faucet: Manual single lever

2.02 SOLID-BRASS, MANUALLY OPERATED FAUCETS

A. NSF STANDARD:

Comply with NSF/ANSI 61, "Drinking Water System Components - Health Effects," for faucet materials that will be in contact with potable water.

B. LAVATORY FAUCETS MANUAL-TYPE, SINGLE-CONTROL MIXING, COMMERCIAL, SOLID-BRASS VALVE:

1. Manufacturers: Subject to compliance with requirements, available manufacturers offering products that may be incorporated into the Work include, but are not limited to, the following:

a. Chicago Faucets (Model 2200-E2805-CP)
b. Kohler Co. (Model K-18140-CP)
c. Zurn Industries, LLC; Commercial Brass and Fixtures. (Z82200-CP4)

2. Standard: ASME A112.18.1/CSA B125.1.
3. General: Include hot- and cold-water indicators; coordinate faucet inlets with supplies and countertop hole punching; coordinate outlet with spout and fixture receptor.
4. Body Type: Centerset, Rigid
5. Body Material: Commercial, solid brass.
6. Finish: Polished chrome plate
7. Maximum Flow Rate: 0.5 gpm (1.5 L/min.)
8. Mounting Type: Deck, exposed.
9. Valve Handle(s): Single lever.
10. Spout: Rigid type.
11. Spout Outlet: Aerator.
12. Operation: Manual Lever
13. Drain: Grid Drain.

2.03 SUPPLY FITTINGS

A. NSF STANDARD:

Comply with NSF/ANSI 61, "Drinking Water System Components - Health Effects," for supply-fitting materials that will be in contact with potable water.

B. STANDARD:

ASME A112.18.1/CSA B125.1.

C. SUPPLY PIPING:

Chrome-plated-brass pipe or chrome-plated copper tube matching water-supply piping size. Include chrome-plated-brass or stainless-steel wall flange.

D. SUPPLY STOPS:

Chrome-plated-brass, one-quarter-turn, ball-type or compression valve with inlet connection matching supply piping.

E. OPERATION:

Loose key or Wheel handle.

F. RISERS:

1. NPS 1/2 (DN 15).
2. ASME A112.18.6, braided- or corrugated-stainless-steel, flexible hose riser.

2.04 WASTE FITTINGS

A. STANDARD:

ASME A112.18.2/CSA B125.2.

B. DRAIN:

Grid type with NPS 1-1/4 (DN 32) offset and straight tailpiece.

C. TRAP:

1. Size: NPS 1-1/2 by NPS 1-1/4 (DN 40 by DN 32].
2. Material: Chrome-plated, two-piece, cast-brass trap and swivel elbow with 0.032-inch- (0.83-mm-) thick brass tube to wall; and chrome-plated, brass or steel wall flange.
3. Material: Stainless-steel, two-piece trap and swivel elbow with 0.012-inch- (0.30-mm-) thick stainless-steel tube to wall; and stainless-steel wall flange.

PART 3—EXECUTION

3.01 EXAMINATION

Examine roughing-in of water supply and sanitary drainage and vent piping systems to verify actual locations of piping connections before lavatory installation.

Examine counters and walls for suitable conditions where lavatories will be installed.

Proceed with installation only after unsatisfactory conditions have been corrected.

3.02 INSTALLATION

Install lavatories level and plumb according to roughing-in drawings.

Install wall flanges or escutcheons at piping wall penetrations in exposed, finished locations. Use deep-pattern escutcheons if required to conceal protruding fittings.

3.03 CONNECTIONS

Connect fixtures with water supplies, stops, and risers, and with traps, soil, waste, and vent piping. Use size fittings required to match fixtures.

3.04 ADJUSTING

Operate and adjust lavatories and controls. Replace damaged and malfunctioning lavatories, fittings, and controls.

Adjust water pressure at faucets to produce proper flow.

3.05 CLEANING AND PROTECTION

After completing installation of lavatories, inspect and repair damaged finishes.

Clean lavatories, faucets, and other fittings with manufacturers' recommended cleaning methods and materials.

Provide protective covering for installed lavatories and fittings.

Do not allow use of lavatories for temporary facilities unless approved in writing by Owner.

END OF SECTION

SECTION 15420

SHOWER ENCLOSURES AND SHOWER VALVES

PART 1—GENERAL

1.01 DESCRIPTION

This section specifies shower enclosures and shower valves.

1.02 QUALITY ASSURANCE

A. REFERENCES:

This section contains references to the following documents. They are a part of this section as specified and modified. Where a referenced document contains references to other standards, those documents are included as references under this section as if referenced directly. In the event of conflict between the requirements of this section and those of the listed documents, the requirements of this section shall prevail.

Unless otherwise specified, references to documents shall mean the documents in effect at the time of Advertisement for Bids or Invitation to Bid (or on the effective date of the Agreement if there were no Bids). If referenced documents have been discontinued by the issuing organization, references to those documents shall mean the replacement documents issued or otherwise identified by that organization or, if there are no replacement documents, the last version of the document before it was discontinued. Where document dates are given in the following listing, references to those documents shall mean the specific document version associated with that date, regardless of whether the document has been superseded by a version with a later date, discontinued or replaced.

Reference	Title
UPC	Uniform Plumbing Code

1.03 SUMMARY

Section Includes:

1. Individual showers.
2. Shower faucets.

PART 2—PRODUCTS

2.01 INDIVIDUAL SHOWERS

A. INDIVIDUAL FIBERGLASS SHOWER ENCLOSURE ADA:

1. Manufacturers: Subject to compliance with requirements, available manufacturers offering products that may be incorporated into the Work include, but are not limited to, the following:

   a. Aqua Bath Corporation (Model C4136BF-FUS) 37” x 41”
   b. Freedom Showers. (Model APTXST3838BF6245) 38” x 39”
   c. Oasis company (Model SHFW3837/ADA03) 38” x 38”

2. General: Fiberglass shower enclosure with faucet and receptor and appurtenances.
3. Standard: ANSI Z124.1.2.
4. Type: One or multi-piece unit without top
5. Style: ADA
6. Faucet: Chrome, Single handle rotate, T & P mixing valve, hand held shower head
7. Nominal Size: Between 39” x 45” (size varies by manufacturer)
8. Color: White.
9. Bathing Surface: Slip resistant according to ASTM F 462.
10. Outlet: Drain with NPS 2 (DN 50) outlet.
11. Shower Rod and Curtain
12. Folding seat
13. Grab bars
14. If supplied with top coordinate with electrical for lighting requirements.

2.02 SHOWER FAUCETS

A. NSF STANDARD:

Comply with NSF 61, "Drinking Water System Components - Health Effects," for shower materials that will be in contact with potable water.

B. SHOWER FAUCETS ADA:

1. Manufacturers: Subject to compliance with requirements, available manufacturers offering products that may be incorporated into the Work include, but are not limited to, the following:

   a. American Standard (Model 1662.221)
   b. Kohler Co. (Model K-8520-CP with 10000-UNBX valve)
   c. Zurn Industries, LLC; (Model Z7000-HW with Z7100-SS-LH)

2. Description: Single-handle, pressure-balance mixing valve with hot- and cold-water indicators; check stops; and hand held shower head on slide bar.

3. Faucet:

    a. Standards: ASME A112.18.1/CSA B125.1 and ASSE 1016.
    b. Body Material: Solid brass.
    c. Finish: Polished chrome plate.
    d. Maximum Flow Rate: 2.5 gpm (9.5 L/min.) unless otherwise indicated.
    e. Mounting: Concealed
    f. Operation: Single-handle, twist or rotate control.
    g. Antiscald Device: Integral with mixing valve
    h. Check Stops: Check-valve type, integral with or attached to body; on hot- and cold-water supply connections.

4. Supply Connections: NPS 1/2 (DN 15).
5. Shower Head: Hand Held ADA

    a. Standard: ASME A112.18.1/CSA B125.1.
    b. Type: Hand held with slide bar. ADA
    c. Shower Head Material: Metallic with chrome-plated finish.
    d. Spray Pattern: Adjustable or Fixed.
    e. Temperature Indicator: Integral with faucet

PART 3—EXECUTION

3.01 INSTALLATION

1. Assemble shower components according to manufacturers' written instructions.

2. Install showers level and plumb according to roughing-in drawings.

3. Install water-supply piping with stop on each supply to each shower faucet.

    a. Exception: Use ball, gate, or globe valves if supply stops are not specified with shower.
    b. Install stops in locations where they can be easily reached for operation.

4. Install shower flow-control fittings with specified maximum flow rates in shower arms.

5. Set shower receptors in leveling bed of cement grout.

6. Install wall flanges or escutcheons at piping wall penetrations in exposed, finished locations. Use deep-pattern escutcheons if required to conceal protruding fittings.

7. Seal joints between showers and floors and walls using sanitary-type, one-part, mildew-resistant silicone sealant. Match sealant color to fixture color.

3.02 CONNECTIONS

Connect fixtures with water supplies, stops, and risers, and with traps, soil, waste, and vent piping. Use size fittings required to match fixtures.

3.03 ADJUSTING

Operate and adjust showers and controls. Replace damaged and malfunctioning showers, fittings, and controls.

Adjust water pressure at faucets to produce proper flow.

3.04 CLEANING AND PROTECTION

After completing installation of showers, inspect and repair damaged finishes.

Clean showers, faucets, and other fittings with manufacturers' recommended cleaning methods and materials.

Provide protective covering for installed fixtures and fittings.

Do not allow use of showers for temporary facilities unless approved in writing by Owner.

END OF SECTION

SECTION 15422

WATER COOLERS

PART 1—GENERAL

1.01 DESCRIPTION

This section specifies Bi-level ADA wall-hung water coolers.

1.02 QUALITY ASSURANCE

A. REFERENCES:

This section contains references to the following documents. They are a part of this section as specified and modified. Where a referenced document contains references to other standards, those documents are included as references under this section as if referenced directly. In the event of conflict between the requirements of this section and those of the listed documents, the requirements of this section shall prevail.

Unless otherwise specified, references to documents shall mean the documents in effect at the time of Advertisement for Bids or Invitation to Bid (or on the effective date of the Agreement if there were no Bids). If referenced documents have been discontinued by the issuing organization, references to those documents shall mean the replacement documents issued or otherwise identified by that organization or, if there are no replacement documents, the last version of the document before it was discontinued. Where document dates are given in the following listing, references to those documents shall mean the specific document version associated with that date, regardless of whether the document has been superseded by a version with a later date, discontinued or replaced.

Reference	Title
UPC	Uniform Plumbing Code

PART 2—PRODUCTS

2.01 PRESSURE WATER COOLERS

A. PRESSURE WATER COOLERS:

Wall-mounted, Bi-level, ADA

1. Manufacturers: Subject to compliance with requirements, available manufacturers offering products that may be incorporated into the Work include, but are not limited to, the following:

   a. Elkay Manufacturing Co. (Model EMABFTL8LC)
   b. Halsey Taylor (Model HAC8FSBL-Q-ADA)
   c. Oasis Corporation (Model PGV8ACSL-14G)

2. Cabinet: Dual, all stainless steel.
3. Bubbler: Two, with adjustable stream regulator, located on each cabinet deck.
4. Control: Push button or Push bar.
5. Drain: Grid with NPS 1-1/4 (DN 32) tailpiece.
6. Supply: NPS 3/8 (DN 10) with shutoff valve.
7. Waste Fitting: ASME A112.18.2/CSA B125.2, NPS 1-1/4 (DN 32) brass P-trap.
8. Filter: One or more water filters complying with NSF 42 and NSF 53 for cyst and lead reduction to below EPA standards; with capacity sized for unit peak flow rate.
9. Cooling System: Electric, with hermetically sealed compressor, cooling coil, air-cooled condensing unit, corrosion-resistant tubing, refrigerant, corrosion-resistant-metal storage tank, and adjustable thermostat.

    a. Electrical Components, Devices, and Accessories: Listed and labeled as defined in NFPA 70, by a qualified testing agency, and marked for intended location and application.

10. Capacities and Characteristics:

    a. Cooled Water: 5 gph (0.0053 L/s).
    b. Ambient-Air Temperature: 90 deg F (32 deg C).
    c. Inlet-Water Temperature: 80 deg F (27 deg C).
    d. Cooled-Water Temperature: 50 deg F (10 deg C).
    e. Electrical Characteristics:

        1) Motor Horsepower: 1/6 or 1/4.
        2) Volts: 120-V ac.
        3) Phase: Single.
        4) Hertz: 60.

11. Support: ASME A112.6.1M, Type I water-cooler carrier.

PART 3—EXECUTION

3.01 EXAMINATION

Examine roughing-in for water-supply and sanitary drainage and vent piping systems to verify actual locations of piping connections before fixture installation.

Examine walls and floors for suitable conditions where fixtures will be installed.

Proceed with installation only after unsatisfactory conditions have been corrected.

3.02 INSTALLATION

Install fixtures level and plumb according to roughing-in drawings.

Install off-the-floor carrier supports, affixed to building substrate, for wall-mounted fixtures.

Install water-supply piping with shutoff valve on supply to each fixture to be connected to domestic-water distribution piping. Use ball, gate, or globe valve. Install valves in locations where they can be easily reached for operation.

Install trap and waste piping on drain outlet of each fixture to be connected to sanitary drainage system.

Install wall flanges or escutcheons at piping wall penetrations in exposed, finished locations. Use deep-pattern escutcheons where required to conceal protruding fittings.

Seal joints between fixtures and walls using sanitary-type, one-part, mildew-resistant, silicone sealant. Match sealant color to fixture color.

3.03 CONNECTIONS

Connect fixtures with water supplies, stops, and risers, and with traps, soil, waste, and vent piping. Use size fittings required to match fixtures.

Install ball, gate, or globe shutoff valve on water supply to each fixture.

3.04 ADJUSTING

Adjust fixture flow regulators for proper flow and stream height.

Adjust pressure water-cooler temperature settings.

3.05 CLEANING

After installing fixture, inspect unit. Remove paint splatters and other spots, dirt, and debris. Repair damaged finish to match original finish.

Clean fixtures, on completion of installation, according to manufacturer's written instructions.

Provide protective covering for installed fixtures.

END OF SECTION

SECTION 15424

EMERGENCY EYEWASH AND SHOWER
COMBO UNITS

PART 1—GENERAL

1.01 DESCRIPTION

This section specifies emergency eyewash and shower combo units for indoor and outdoor use.

1.02 QUALITY ASSURANCE

A. REFERENCES:

This section contains references to the following documents. They are a part of this section as specified and modified. Where a referenced document contains references to other standards, those documents are included as references under this section as if referenced directly. In the event of conflict between the requirements of this section and those of the listed documents, the requirements of this section shall prevail.

Unless otherwise specified, references to documents shall mean the documents in effect at the time of Advertisement for Bids or Invitation to Bid (or on the effective date of the Agreement if there were no Bids). If referenced documents have been discontinued by the issuing organization, references to those documents shall mean the replacement documents issued or otherwise identified by that organization or, if there are no replacement documents, the last version of the document before it was discontinued. Where document dates are given in the following listing, references to those documents shall mean the specific document version associated with that date, regardless of whether the document has been superseded by a version with a later date, discontinued or replaced.

Reference	Title
UPC	Uniform Plumbing Code

PART 2—PRODUCTS

2.01 COMBINATION UNITS

A. STANDARD, PLUMBED EMERGENCY SHOWER WITH EYEWASH COMBINATION UNITS:

1. Manufacturers: Subject to compliance with requirements, available manufacturers offering products that may be incorporated into the Work include, but are not limited to, the following:

a. Bradley Corporation. (Model S19-310AC)
b. Haws Corporation (Model 8300-8309)

c. Speakman Company (Model SE-625)

2. Piping:

a. Material: Galvanized steel
b. Unit Supply: NPS 1-1/4 (DN 32) minimum
c. Unit Drain: Outlet at back or side near bottom.

3. Shower:

a. Capacity: Not less than 20 gpm (76 L/min.) for at least 15 minutes.
b. Supply Piping: NPS 1 (DN 25) with flow regulator and stay-open control valve.
c. Control-Valve Actuator: Pull rod
d. Shower Head: 8-inch- (200-mm-) minimum diameter, chrome-plated brass or stainless steel
e. Mounting: Pedestal.

4. Eyewash Unit:

a. Capacity: Not less than 0.4 gpm (1.5 L/min.) for at least 15 minutes.
b. Supply Piping: NPS 1/2 (DN 15) with flow regulator and stay-open control valve.
c. Control-Valve Actuator: Paddle.
d. Spray-Head Assembly: Two receptor-mounted spray heads.
e. Receptor: Chrome-plated brass or stainless-steel bowl.
f. Mounting: Attached shower pedestal.
g. Drench-Hose Option: May be provided instead of eyewash unit.

1) Capacity: Not less than 0.4 gpm (1.5 L/min.) for at least 15 minutes.
2) Drench Hose: Hand-held spray head with squeeze-handle actuator and hose.
3) Mounting: Bracket on shower pedestal.

B. FREEZE-PROTECTED, PLUMBED EMERGENCY SHOWER WITH EYEWASH COMBINATION UNITS:

1. Manufacturers: Subject to compliance with requirements, available manufacturers offering products that may be incorporated into the Work include, but are not limited to, the following:

a. Bradley Corporation (Model S19-300)
b. Haws Corporation (Model 8317 CTFPT)
c. Speakman Company (Model SE-7000)

2. Piping: Galvanized steel.

   a. Unit Supply: [NPS 1-1/4 (DN 32) minimum from bottom.

3. Heating System: Electric, 120-V ac; and insulation with protective jacket and thermometer.

   a. Heating Capacity: 10 degrees F (6 degrees C) minimum above ambient temperature.
   b. Design Ambient Temperature: 38.

4. Shower:

   a. Shower Capacity: Not less than 20 gpm (76 L/min.) for at least 15 minutes.
   b. Supply Piping: NPS 1 (DN 25) with flow regulator and stay-open control valve.
   c. Control-Valve Actuator: Pull rod.
   d. Shower Head: 8-inch- (200-mm-) minimum diameter, chrome-plated brass or stainless steel.
   e. Mounting: Pedestal.

5. Eyewash Unit:

   a. Capacity: Not less than 0.4 gpm (1.5 L/min.) for at least 15 minutes.
   b. Supply Piping: NPS 1/2 (DN 15) with flow regulator and stay-open control valve.
   c. Control-Valve Actuator: Paddle.

PART 3—EXECUTION

3.01 EMERGENCY PLUMBING FIXTURE INSTALLATION

Assemble emergency plumbing fixture piping, fittings, control valves, and other components.

Install fixtures level and plumb.

Fasten fixtures to substrate.

Install shutoff valves in water-supply piping to fixtures. Use ball, gate, or globe valve if specific type valve is not indicated. Install valves chained or locked in open position if permitted. Install valves in locations where they can easily be reached for operation.

1. Exception: Omit shutoff valve on supply to group of plumbing fixtures that includes emergency equipment.
2. Exception: Omit shutoff valve on supply to emergency equipment if prohibited by authorities having jurisdiction.

Install dielectric fitting in supply piping to emergency equipment if piping and equipment connections are made of different metals.

Install thermometers in supply and outlet piping connections to water-tempering equipment.

Install indirect waste piping on drain outlet of emergency equipment receptors that are indicated to be indirectly connected to drainage system.

3.02 CONNECTIONS

Indirectly connect emergency plumbing fixture receptors without trapped drain outlet to sanitary waste or storm drainage piping.

Where installing piping adjacent to emergency plumbing fixtures, allow space for service and maintenance of fixtures.

3.03 IDENTIFICATION

Install equipment nameplates or equipment markers on emergency plumbing fixtures.

3.04 FIELD QUALITY CONTROL

A. MECHANICAL-COMPONENT TESTING:

After plumbing connections have been made, test for compliance with requirements. Verify ability to achieve indicated capacities.

B. TESTS AND INSPECTIONS:

1. Perform each visual and mechanical inspection.
2. Leak Test: After installation, charge system and test for leaks. Repair leaks and retest until no leaks exist.
3. Operational Test: After electrical circuitry has been energized, start units to confirm proper unit operation.
4. Test and adjust controls and safeties. Replace damaged and malfunctioning controls and equipment.

Emergency plumbing fixtures will be considered defective if they do not pass tests and inspections.

Prepare test and inspection reports.

3.05 ADJUSTING

Adjust or replace fixture flow regulators for proper flow.

END OF SECTION

SECTION 15426

COMMERCIAL SINKS

PART 1—GENERAL

1.01 SUMMARY

This section includes:

1. Janitor's sinks.
2. Breakroom sinks.
3. Laboratory sinks.
4. Sink faucets.
5. Supply fittings.
6. Waste fittings.

PART 2—PRODUCTS

2.01 JANITOR'S SINK

A. JANITOR'S SINK:

Enameled, cast iron, trap standard wall mounted.

1. Manufacturers: Subject to compliance with requirements, available manufacturers offering products that may be incorporated into the Work include, but are not limited to, the following:

    a. American Standard America (Model 7695.008)
    b. Kohler Co. (Model K6716-0)
    c. Grainger (Model 1KBB9/1KBB7)

2. Fixture:

    a. Standard: ASME A112.19.1/CSA B45.2.
    b. Type: Janitor's sink with back, wall mounted.
    c. Back: Two faucet holes.
    d. Nominal Size: 22 by 18 inches (560 by 457 mm) or 24 by 20 inches (610 by 508 mm).
    e. Color: White.
    f. Mounting: NPS 3 (DN 80) P-trap standard with grid strainer inlet, cleanout, and floor flange.
    g. Rim Guard: On front and sides.

3. Faucet: Back mounted with bucket hook.

    a. American Standard America (Model 8344-112-004)

b. Kohler Co. (Model K8907-RP)
c. Chicago (Model 2P954)

4. Support: ASME A112.6.1M, Type II, sink carrier.

2.02 BREAKROOM SINK

A. BREAKROOM SINKS:

Stainless steel, counter mounted.

1. Manufacturers: Subject to compliance with requirements, available manufacturers offering products that may be incorporated into the Work include, but are not limited to, the following:

a. Elkay Manufacturing Co. (Model DLH 252212 C)
b. Griffin Products, Inc. (Model CLS-2522)
c. Just Manufacturing. (Model SL-2225-A-GR)

2. Fixture:

a. Standard: ASME A112.19.3/CSA B45.4.
b. Type: Ledge back.
c. Number of Compartments: One.
d. Overall Dimensions: 25” x 22”
e. Compartment:

1) Drain: NPS 1-1/2 (DN 40) tailpiece and twist drain.
2) Drain Location: Centered in compartment

3. Faucet: Single lever, swivel, goose-neck, chrome, ledge mounted

a. Elkay Manufacturing Co. (Model LKE4160)
b. Chicago Mfg. (Model 2300-8CP)
c. Delta Faucet (Model 100 Dst)

4. Supply Fittings:

a. Standard: ASME A112.18.1/CSA B125.1.
b. Supplies: Chrome-plated brass compression stop with inlet connection matching water-supply piping type and size.

1) Operation: Loose key.
2) Risers: NPS 1/2 (DN 15), chrome-plated, rigid-copper pipe or chrome-plated, soft-copper flexible tube.

5. Waste Fittings:

a. Standard: ASME A112.18.2/CSA B125.2.
b. Trap:

1) Size: NPS 1-1/2 (DN 40).
2) Material: Chrome-plated, two-piece, cast-brass trap and swivel elbow with 0.032-inch- (0.83-mm-) thick brass tube to wall; and chrome-plated brass or steel wall flange.
3) Material: Stainless-steel, two-piece trap and swivel elbow with 0.012-inch- (0.30-mm-) thick stainless-steel tube to wall; and stainless-steel wall flange.

6. Mounting: On counter with sealant.

2.03 LABORATORY SINKS

Laboratory Sinks: Integral with countertop, acid resistant material – Specified as part of casework.

2.04 LABORATORY SINK FAUCETS (Only) for Laboratory sinks.

A. NSF STANDARD:

Comply with NSF/ANSI 61, "Drinking Water System Components - Health Effects," for faucet-spout materials that will be in contact with potable water.

B. SINK FAUCETS (ONLY):

Manual type, two-lever-handle mixing valve.

1. Manufacturers: Subject to compliance with requirements, available manufacturers offering products that may be incorporated into the Work include, but are not limited to, the following.

   a. Chicago Faucets (Model 1100-GN2AE3-317ABCP)
   b. T & S Brass and Bronze Works, Inc. (Model B-2851/BWH4)
   c. Zurn (Model Z812A4)

2. Standard: ASME A112.18.1/CSA B125.1.
3. General: Include hot- and cold-water indicators; coordinate faucet inlets with supplies and fixture hole punchings; coordinate outlet with spout and sink receptor.
4. Body Type: Centerset
5. Body Material: Commercial, solid brass
6. Finish: Chrome plated
7. Maximum Flow Rate: 2.2 gpm (8.3 L/min.)
8. Handle(s): Wrist blade, 4 inches (102 mm)
9. Mounting Type: Deck, mounted
10. Spout Type: Rigid, solid brass.
11. Vacuum Breaker: Required
12. Spout Outlet: Aerator.
13. Emergency Eyewash accessory.

2.05 SUPPLY FITTINGS

A. NSF STANDARD:

Comply with NSF/ANSI 61, "Drinking Water System Components - Health Effects," for supply-fitting materials that will be in contact with potable water.

B. STANDARD:

ASME A112.18.1/CSA B125.1.

C. SUPPLY PIPING:

Chrome-plated brass pipe or chrome-plated copper tube matching water-supply piping size. Include chrome-plated brass or stainless-steel wall flange.

D. SUPPLY STOPS:

Chrome-plated brass, one-quarter-turn, ball-type or compression valve with inlet connection matching supply piping.

E. OPERATION:

Loose key.

F. RISERS:

1. NPS 1/2 (DN 15)
2. Chrome-plated, rigid-copper pipe or Chrome-plated, soft-copper flexible tube

2.06 WASTE FITTINGS

A. STANDARD:

ASME A112.18.2/CSA B125.2.

B. DRAIN:

Grid type with NPS 1-1/2 (DN 40) offset and straight tailpiece.

C. TRAP:

1. Size: NPS 1-1/2 (DN 40).
2. Material: Chrome-plated, [two-piece, cast-brass trap and swivel elbow with 0.032-inch- (0.83-mm-) thick brass tube to wall]; and chrome-plated brass or steel wall flange.
3. Material: Stainless-steel, two-piece trap and swivel elbow with 0.012-inch- (0.30-mm-) thick stainless-steel tube to wall; and stainless-steel wall flange.

PART 3—EXECUTION

3.01 EXAMINATION

Examine roughing-in of water supply and sanitary drainage and vent piping systems to verify actual locations of piping connections before sink installation.

Examine walls, floors, and counters for suitable conditions where sinks will be installed.

Proceed with installation only after unsatisfactory conditions have been corrected.

3.02 INSTALLATION

Install sinks level and plumb according to roughing-in drawings.

Install supports, affixed to building substrate, for wall-hung sinks.

1. Exception: Use ball, gate, or globe valves if supply stops are not specified with sink.
2. Install stops in locations where they can be easily reached for operation.

Install wall flanges or escutcheons at piping wall penetrations in exposed, finished locations. Use deep-pattern escutcheons if required to conceal protruding fittings.

Seal joints between sinks and counters, floors, and walls using sanitary-type, one-part, mildew-resistant silicone sealant. Match sealant color to fixture color.

3.03 CONNECTIONS

Connect sinks with water supplies, stops, and risers, and with traps, soil, waste, and vent piping. Use size fittings required to match fixtures.

3.04 ADJUSTING

Operate and adjust sinks and controls. Replace damaged and malfunctioning sinks, fittings, and controls.

Adjust water pressure at faucets to produce proper flow.

3.05 CLEANING AND PROTECTION

After completing installation of sinks, inspect and repair damaged finishes.

Clean sinks, faucets, and other fittings with manufacturers' recommended cleaning methods and materials.

Provide protective covering for installed sinks and fittings.

Do not allow use of sinks for temporary facilities unless approved in writing by Owner.

END OF SECTION

SECTION 15465

PLUMBING PIPING INSULATION

PART 1—GENERAL

1.01 DESCRIPTION

This section specifies insulation for plumbing piping.

1.02 QUALITY ASSURANCE

A. REFERENCES:

This section contains references to the following documents. They are a part of this section as specified and modified. Where a referenced document contains references to other standards, those documents are included as references under this section as if referenced directly. In the event of conflict between the requirements of this section and those of the listed documents, the requirements of this section shall prevail.

Unless otherwise specified, references to documents shall mean the documents in effect at the time of Advertisement for Bids or Invitation to Bid (or on the effective date of the Agreement if there were no Bids). If referenced documents have been discontinued by the issuing organization, references to those documents shall mean the replacement documents issued or otherwise identified by that organization or, if there are no replacement documents, the last version of the document before it was discontinued. Where document dates are given in the following listing, references to those documents shall mean the specific document version associated with that date, regardless of whether the document has been superseded by a version with a later date, discontinued or replaced.

Reference	Title
UPC	Uniform Plumbing Code

1.03 SUMMARY

Section includes insulating the following plumbing piping services:

1. Domestic hot-water piping.
2. Domestic cold-water (W1) piping installed above finished ceilings.
3. Roof drains and roof drain bodies.

PART 2—PRODUCTS

2.01 INSULATION MATERIALS

Products shall not contain asbestos, lead, mercury, or mercury compounds.

Products that come in contact with stainless steel shall have a leachable chloride content of less than 50 ppm when tested according to ASTM C 871.

Insulation materials for use on austenitic stainless steel shall be qualified as acceptable according to ASTM C 795.

Foam insulation materials shall not use CFC or HCFC blowing agents in the manufacturing process.

A. CELLULAR GLASS:

Inorganic, incombustible, foamed or cellulated glass with annealed, rigid, hermetically sealed cells.

1. Products: Subject to compliance with requirements, available products that may be incorporated into the Work include, but are not limited to, the following:

   a. Pittsburgh Corning Corporation; Foamglas.

2. Special-Shaped Insulation: ASTM C 552, Type III.
3. Preformed Pipe Insulation without Jacket: Comply with ASTM C 552, Type II, Class 1.
4. Preformed Pipe Insulation with Factory-Applied ASJ-SSL: Comply with ASTM C 552, Type II, Class 2.
5. Factory fabricated shapes according to ASTM C 450 and ASTM C 585.

B. FLEXIBLE ELASTOMERIC INSULATION:

Closed-cell, sponge- or expanded-rubber materials. Comply with ASTM C 534, Type I for tubular materials.

1. Products: Subject to compliance with requirements, available products that may be incorporated into the Work include, but are not limited to, the following:

   a. Aeroflex USA, Inc.; Aerocel.
   b. Armacell LLC; AP Armaflex.
   c. K-Flex USA; Insul-Lock, Insul-Tube, and K-FLEX LS.

C. MINERAL-FIBER, PREFORMED PIPE INSULATION:

1. Products: Subject to compliance with requirements, available products that may be incorporated into the Work include, but are not limited to, the following:

   a. Fibrex Insulations Inc.; Coreplus 1200.
   b. Johns Manville; Micro-Lok.
   c. Knauf Insulation; 1000-Degree Pipe Insulation.
   d. Manson Insulation Inc.; Alley-K.

e. Owens Corning; Fiberglas Pipe Insulation.

2. Type I, 850 Deg F (454 Deg C) Materials: Mineral or glass fibers bonded with a thermosetting resin. Comply with ASTM C 547, Type I, Grade A, without factory-applied jacket

D. POLYOLEFIN:

Unicellular, polyethylene thermal plastic insulation. Comply with ASTM C 534 or ASTM C 1427, Type I, Grade 1 for tubular materials.

1. Products: Subject to compliance with requirements, available products that may be incorporated into the Work include, but are not limited to, the following:

a. Armacell LLC; Tubolit.
b. Nomaco Insulation; IMCOLOCK and NOMALOCK.

2.02 ADHESIVES

Materials shall be compatible with insulation materials, jackets, and substrates and for bonding insulation to itself and to surfaces to be insulated, unless otherwise indicated.

A. CELLULAR-GLASS ADHESIVE:

Two-component, thermosetting urethane adhesive containing no flammable solvents, with a service temperature range of minus 100 to plus 200 deg F (minus 73 to plus 93 deg C).

1. Products: Subject to compliance with requirements, available products that may be incorporated into the Work include, but are not limited to, the following:

a. Foster Brand, Specialty Construction Brands, Inc., a business of H. B. Fuller Company; 81-84.

2. For indoor applications, adhesive shall have a VOC content of 50 g/L or less when calculated according to 40 CFR 59, Subpart D (EPA Method 24).
3. Adhesive shall comply with the testing and product requirements of the California Department of Health Services' "Standard Practice for the Testing of Volatile Organic Emissions from Various Sources Using Small-Scale Environmental Chambers."

B. FLEXIBLE ELASTOMERIC AND POLYOLEFIN ADHESIVE:

Comply with MIL-A-24179A, Type II, Class I.

1. Products: Subject to compliance with requirements, available products that may be incorporated into the Work include, but are not limited to, the following:

a. Aeroflex USA, Inc.; Aeroseal.
b. Armacell LLC; Armaflex 520 Adhesive.
c. Foster Brand, Specialty Construction Brands, Inc., a business of H. B. Fuller Company; 85-75.
d. K-Flex USA; R-373 Contact Adhesive

2. For indoor applications, adhesive shall have a VOC content of 50 g/L or less when calculated according to 40 CFR 59, Subpart D (EPA Method 24).
3. Adhesive shall comply with the testing and product requirements of the California Department of Health Services' "Standard Practice for the Testing of Volatile Organic Emissions from Various Sources Using Small-Scale Environmental Chambers."

C. MINERAL-FIBER ADHESIVE:

Comply with MIL-A-3316C, Class 2, Grade A.

1. Products: Subject to compliance with requirements, available products that may be incorporated into the Work include, but are not limited to, the following:

a. Childers Brand, Specialty Construction Brands, Inc., a business of H. B. Fuller Company; CP-127.
b. Eagle Bridges - Marathon Industries; 225.
c. Foster Brand, Specialty Construction Brands, Inc., a business of H. B. Fuller Company; 85-60/85-70.
d. Mon-Eco Industries, Inc.; 22-25.

2. For indoor applications, adhesive shall have a VOC content of 80 g/L or less when calculated according to 40 CFR 59, Subpart D (EPA Method 24).
3. Adhesive shall comply with the testing and product requirements of the California Department of Health Services' "Standard Practice for the Testing of Volatile Organic Emissions from Various Sources Using Small-Scale Environmental Chambers."

2.03 MASTICS

Materials shall be compatible with insulation materials, jackets, and substrates; comply with MIL-PRF-19565C, Type II.

1. For indoor applications, use mastics that have a VOC content of 50 g/L or less when calculated according to 40 CFR 59, Subpart D (EPA Method 24).

A. BREATHER MASTIC:

Water based; suitable for indoor and outdoor use on above-ambient services.

1. Products: Subject to compliance with requirements, available products that may be incorporated into the Work include, but are not limited to, the following:

    a. Childers Brand, Specialty Construction Brands, Inc., a business of H. B. Fuller Company; CP-10.
    b. Eagle Bridges - Marathon Industries; 550.
    c. Foster Brand, Specialty Construction Brands, Inc., a business of H. B. Fuller Company; 46-50.
    d. Mon-Eco Industries, Inc.; 55-50.
    e. Vimasco Corporation; WC-1/WC-5.

2. Water-Vapor Permeance: ASTM F 1249, 1.8 perms (1.2 metric perms) at 0.0625-inch (1.6-mm) dry film thickness.
3. Service Temperature Range: Minus 20 to plus 180 deg F (Minus 29 to plus 82 deg C).
4. Solids Content: 60 percent by volume and 66 percent by weight.
5. Color: White.

2.04 SEALANTS

A. JOINT SEALANTS:

1. Joint Sealants for Cellular-Glass Products: Subject to compliance with requirements, available products that may be incorporated into the Work include, but are not limited to, the following:

    a. Childers Brand, Specialty Construction Brands, Inc., a business of H. B. Fuller Company; CP-76.
    b. Eagle Bridges - Marathon Industries; 405.
    c. Foster Brand, Specialty Construction Brands, Inc., a business of H. B. Fuller Company; 30-45.
    d. Mon-Eco Industries, Inc.; 44-05.
    e. Pittsburgh Corning Corporation; Pittseal 444.

2. Materials shall be compatible with insulation materials, jackets, and substrates.
3. Permanently flexible, elastomeric sealant.
4. Service Temperature Range: Minus 100 to plus 300 deg F (Minus 73 to plus 149 deg C).
5. Color: White or gray.
6. For indoor applications, sealants shall have a VOC content of 420 g/L or less when calculated according to 40 CFR 59, Subpart D (EPA Method 24).

B. METAL JACKET FLASHING SEALANTS:

1. Products: Subject to compliance with requirements, available products that may be incorporated into the Work include, but are not limited to, the following:

   a. Childers Brand, Specialty Construction Brands, Inc., a business of H.B. Fuller Company; CP-76.
   b. Eagle Bridges - Marathon Industries; 405.
   c. Foster Brand, Specialty Construction Brands, Inc., a business of H.B. Fuller Company; 95-44.
   d. Mon-Eco Industries, Inc.; 44-05.

2. Materials shall be compatible with insulation materials, jackets, and substrates.
3. Fire- and water-resistant, flexible, elastomeric sealant.
4. Service Temperature Range: Minus 40 to plus 250 deg F (Minus 40 to plus 121 deg C).
5. Color: Aluminum.

C. ASJ FLASHING SEALANTS, AND VINYL, PVDC, AND PVC JACKET FLASHING SEALANTS:

1. Products: Subject to compliance with requirements, [provide the following] [provide one of the following] [available products that may be incorporated into the Work include, but are not limited to, the following]:

   a. Childers Brand, Specialty Construction Brands, Inc., a business of H. B. Fuller Company; CP-76.

2. Materials shall be compatible with insulation materials, jackets, and substrates.
3. Fire- and water-resistant, flexible, elastomeric sealant.
4. Service Temperature Range: Minus 40 to plus 250 deg F (Minus 40 to plus 121 deg C).
5. Color: White.
6. For indoor applications, sealants shall have a VOC content of 420 g/L or less when calculated according to 40 CFR 59, Subpart D (EPA Method 24).

2.05 TAPES

A. ASJ TAPE:

White vapor-retarder tape matching factory-applied jacket with acrylic adhesive, complying with ASTM C 1136.

1. Products: Subject to compliance with requirements, available products that may be incorporated into the Work include, but are not limited to, the following:

a. ABI, Ideal Tape Division; 428 AWF ASJ.
b. Avery Dennison Corporation, Specialty Tapes Division; Fasson 0836.
c. Compac Corporation; 104 and 105.
d. Venture Tape; 1540 CW Plus, 1542 CW Plus, and 1542 CW Plus/SQ.

2. Width: 3 inches (75 mm).
3. Thickness: 11.5 mils (0.29 mm).
4. Adhesion: 90 ounces force/inch (1.0 N/mm) in width.
5. Elongation: 2 percent.
6. Tensile Strength: 40 lbf/inch (7.2 N/mm) in width.
7. ASJ Tape Disks and Squares: Precut disks or squares of ASJ tape.

B. PVC TAPE:

White vapor-retarder tape matching field-applied PVC jacket with acrylic adhesive; suitable for indoor and outdoor applications.

1. Products: Subject to compliance with requirements, available products that may be incorporated into the Work include, but are not limited to, the following:

a. ABI, Ideal Tape Division; 370 White PVC tape.
b. Compac Corporation; 130.
c. Venture Tape; 1506 CW NS.

2. Width: 2 inches (50 mm).
3. Thickness: 6 mils (0.15 mm).
4. Adhesion: 64 ounces force/inch (0.7 N/mm) in width.
5. Elongation: 500 percent.
6. Tensile Strength: 18 lbf/inch (3.3 N/mm) in width.

C. ALUMINUM-FOIL TAPE:

Vapor-retarder tape with acrylic adhesive.

1. Products: Subject to compliance with requirements: available products that may be incorporated into the Work include, but are not limited to, the following:

a. ABI, Ideal Tape Division; 488 AWF.
b. Avery Dennison Corporation, Specialty Tapes Division; Fasson 0800.
c. Compac Corporation; 120.
d. Venture Tape; 3520 CW.

2. Width: 2 inches (50 mm).
3. Thickness: 3.7 mils (0.093 mm).

4. Adhesion: 100 ounces force/inch (1.1 N/mm) in width.
5. Elongation: 5 percent.
6. Tensile Strength: 34 lbf/inch (6.2 N/mm) in width.

2.06 SECUREMENTS

A. ALUMINUM BANDS:

ASTM B 209 (ASTM B 209M), Alloy 3003, 3005, 3105, or 5005; Temper H-14, 0.020 inch (0.51 mm) thick, 1/2 inch (13 mm) wide with wing seal or closed seal.

1. Products: Subject to compliance with requirements, available products that may be incorporated into the Work include, but are not limited to, the following:

   a. ITW Insulation Systems; Gerrard Strapping and Seals.
   b. RPR Products, Inc.; Insul-Mate Strapping and Seals.

B. STAPLES:

Outward-clinching insulation staples, nominal 3/4-inch- (19-mm-) wide, stainless steel or Monel.

C. WIRE:

0.062-inch (1.6-mm) soft-annealed, stainless steel.

1. Manufacturers: Subject to compliance with requirements, available manufacturers offering products that may be incorporated into the Work include, but are not limited to, the following:

   a. C & F Wire.

PART 3—EXECUTION

3.01 PREPARATION

A. SURFACE PREPARATION:

Clean and dry surfaces to receive insulation. Remove materials that will adversely affect insulation application.

Coordinate insulation installation with the trade installing heat tracing. Comply with requirements for heat tracing that apply to insulation.

Mix insulating cements with clean potable water; if insulating cements are to be in contact with stainless-steel surfaces, use demineralized water.

3.02 GENERAL INSTALLATION REQUIREMENTS

Install insulation materials, accessories, and finishes with smooth, straight, and even surfaces; free of voids throughout the length of piping including fittings, valves, and specialties.

Install insulation materials, forms, vapor barriers or retarders, jackets, and thicknesses required for each item of pipe system as specified in insulation system schedules.

Install accessories compatible with insulation materials and suitable for the service. Install accessories that do not corrode, soften, or otherwise attack insulation or jacket in either wet or dry state.

Install insulation with longitudinal seams at top and bottom of horizontal runs.

Install multiple layers of insulation with longitudinal and end seams staggered.

Do not weld brackets, clips, or other attachment devices to piping, fittings, and specialties.

Keep insulation materials dry during application and finishing.

Install insulation with tight longitudinal seams and end joints. Bond seams and joints with adhesive recommended by insulation material manufacturer.

Install insulation with least number of joints practical.

Apply adhesives, mastics, and sealants at manufacturer's recommended coverage rate and wet and dry film thicknesses.

Install insulation with factory-applied jackets as follows:

1. Draw jacket tight and smooth.
2. Cover circumferential joints with 3-inch- (75-mm-) wide strips, of same material as insulation jacket. Secure strips with adhesive and outward clinching staples along both edges of strip, spaced 4 inches (100 mm) o.c.
3. Overlap jacket longitudinal seams at least 1-1/2 inches (38 mm). Install insulation with longitudinal seams at bottom of pipe. Clean and dry surface to receive self-sealing lap. Staple laps with outward clinching staples along edge at [2 inches (50 mm)] [4 inches (100 mm)] o.c.

    a. For below-ambient services, apply vapor-barrier mastic over staples.

4. Cover joints and seams with tape, according to insulation material manufacturer's written instructions, to maintain vapor seal.
5. Where vapor barriers are indicated, apply vapor-barrier mastic on seams and joints and at ends adjacent to pipe flanges and fittings.

Cut insulation in a manner to avoid compressing insulation more than 75 percent of its nominal thickness.

Finish installation with systems at operating conditions. Repair joint separations and cracking due to thermal movement.

Repair damaged insulation facings by applying same facing material over damaged areas. Extend patches at least 4 inches (100 mm) beyond damaged areas. Adhere, staple, and seal patches similar to butt joints.

For above-ambient services, do not install insulation to the following:

1. Vibration-control devices.
2. Testing agency labels and stamps.
3. Nameplates and data plates.
4. Cleanouts.

3.03 PENETRATIONS

A. INSULATION INSTALLATION AT ABOVEGROUND EXTERIOR WALL PENETRATIONS:

Install insulation continuously through wall penetrations.

1. Seal penetrations with flashing sealant.
2. Extend jacket of outdoor insulation outside wall flashing and overlap wall flashing at least 2 inches (50 mm).
3. Seal jacket to wall flashing with flashing sealant.

B. INSULATION INSTALLATION AT INTERIOR WALL AND PARTITION PENETRATIONS (THAT ARE NOT FIRE RATED):

Install insulation continuously through walls and partitions.

C. INSULATION INSTALLATION AT FIRE-RATED WALL AND PARTITION PENETRATIONS:

Install insulation continuously through penetrations of fire-rated walls and partitions.

D. INSULATION INSTALLATION AT FLOOR PENETRATIONS:

1. Pipe: Install insulation continuously through floor penetrations.
2. Seal penetrations through fire-rated assemblies.

3.04 GENERAL PIPE INSULATION INSTALLATION

Requirements in this article generally apply to all insulation materials except where more specific requirements are specified in various pipe insulation material installation articles.

A. INSULATION INSTALLATION ON FITTINGS, VALVES, STRAINERS AND UNIONS:

1. Install insulation over fittings, strainers, flanges, unions, and other specialties with continuous thermal and vapor-retarder integrity unless otherwise indicated.
2. Insulate pipe elbows using preformed fitting insulation or mitered fittings made from same material and density as adjacent pipe insulation. Each piece shall be butted tightly against adjoining piece and bonded with adhesive. Fill joints, seams, voids, and irregular surfaces with insulating cement finished to a smooth, hard, and uniform contour that is uniform with adjoining pipe insulation.
3. Insulate tee fittings with preformed fitting insulation or sectional pipe insulation of same material and thickness as used for adjacent pipe. Cut sectional pipe insulation to fit. Butt each section closely to the next and hold in place with tie wire. Bond pieces with adhesive.
4. Insulate valves using preformed fitting insulation or sectional pipe insulation of same material, density, and thickness as used for adjacent pipe. Overlap adjoining pipe insulation by not less than two times the thickness of pipe insulation, or one pipe diameter, whichever is thicker. For valves, insulate up to and including the bonnets, valve stuffing-box studs, bolts, and nuts. Fill joints, seams, and irregular surfaces with insulating cement.
5. Insulate strainers using preformed fitting insulation or sectional pipe insulation of same material, density, and thickness as used for adjacent pipe. Overlap adjoining pipe insulation by not less than two times the thickness of pipe insulation, or one pipe diameter, whichever is thicker. Fill joints, seams, and irregular surfaces with insulating cement.
6. Cover segmented insulated surfaces with a layer of finishing cement and coat with a mastic. Install vapor-barrier mastic for below-ambient services and a breather mastic for above-ambient services. Reinforce the mastic with fabric-reinforcing mesh. Trowel the mastic to a smooth and well-shaped contour.
7. For services not specified to receive a field-applied jacket except for flexible elastomeric and polyolefin, install fitted PVC cover over elbows, tees, strainers, valves, flanges, and unions. Terminate ends with PVC end caps. Tape PVC covers to adjoining insulation facing using PVC tape.
8. Stencil or label the outside insulation jacket of each union with the word "union." Match size and color of pipe labels.

Insulate instrument connections for thermometers, pressure gages, pressure temperature taps, test connections, flow meters, sensors, switches, and transmitters on insulated pipes. Shape insulation at these connections by tapering it to and around the connection with insulating cement and finish with finishing cement, mastic, and flashing sealant.

3.05 INSTALLATION OF CELLULAR-GLASS INSULATION

A. INSULATION INSTALLATION ON STRAIGHT PIPES AND TUBES:

1. Secure each layer of insulation to pipe with wire or bands and tighten bands without deforming insulation materials.
2. Where vapor barriers are indicated, seal longitudinal seams, end joints, and protrusions with vapor-barrier mastic and joint sealant.
3. For insulation with factory-applied jackets on above-ambient services, secure laps with outward clinched staples at 6 inches (150 mm) o.c.
4. For insulation with factory-applied jackets on below-ambient services, do not staple longitudinal tabs. Instead, secure tabs with additional adhesive as recommended by insulation material manufacturer and seal with vapor-barrier mastic and flashing sealant.

B. INSULATION INSTALLATION ON PIPE FITTINGS AND ELBOWS:

1. Install preformed sections of same material as straight segments of pipe insulation when available. Secure according to manufacturer's written instructions.
2. When preformed sections of insulation are not available, install mitered sections of cellular-glass insulation. Secure insulation materials with wire or bands.

C. INSULATION INSTALLATION ON VALVES AND PIPE SPECIALTIES:

1. Install preformed sections of cellular-glass insulation to valve body.
2. Arrange insulation to permit access to packing and to allow valve operation without disturbing insulation.

3.06 INSTALLATION OF FLEXIBLE ELASTOMERIC INSULATION

Seal longitudinal seams and end joints with manufacturer's recommended adhesive to eliminate openings in insulation that allow passage of air to surface being insulated.

A. INSULATION INSTALLATION ON PIPE FITTINGS AND ELBOWS:

1. Install mitered sections of pipe insulation.
2. Secure insulation materials and seal seams with manufacturer's recommended adhesive to eliminate openings in insulation that allow passage of air to surface being insulated.

B. INSULATION INSTALLATION ON VALVES AND PIPE SPECIALTIES:

1. Install preformed sections of flexible elastomeric insulation to valve body.
2. Arrange insulation to permit access to packing and to allow valve operation without disturbing insulation.

3.07 INSTALLATION OF MINERAL-FIBER PREFORMED PIPE INSULATION

A. INSULATION INSTALLATION ON STRAIGHT PIPES AND TUBES:

1. Secure each layer of preformed pipe insulation to pipe with wire or bands and tighten bands without deforming insulation materials.
2. For insulation with factory-applied jackets on above-ambient surfaces, secure laps with outward clinched staples at 6 inches (150 mm) o.c.
3. For insulation with factory-applied jackets on below-ambient surfaces, do not staple longitudinal tabs. Instead, secure tabs with additional adhesive as recommended by insulation material manufacturer and seal with vapor-barrier mastic and flashing sealant.

B. INSULATION INSTALLATION ON PIPE FITTINGS AND ELBOWS:

1. Install preformed sections of same material as straight segments of pipe insulation when available.
2. When preformed insulation elbows and fittings are not available, install mitered sections of pipe insulation, to a thickness equal to adjoining pipe insulation. Secure insulation materials with wire or bands.

C. INSULATION INSTALLATION ON VALVES AND PIPE SPECIALTIES:

1. Install preformed sections of same material as straight segments of pipe insulation when available.
2. When preformed sections are not available, install mitered sections of pipe insulation to valve body.
3. Arrange insulation to permit access to packing and to allow valve operation without disturbing insulation.

3.08 INSTALLATION OF POLYOLEFIN INSULATION

A. INSULATION INSTALLATION ON STRAIGHT PIPES AND TUBES:

1. Seal split-tube longitudinal seams and end joints with manufacturer's recommended adhesive to eliminate openings in insulation that allow passage of air to surface being insulated.

B. INSULATION INSTALLATION ON PIPE FITTINGS AND ELBOWS:

1. Install mitered sections of polyolefin pipe insulation.
2. Secure insulation materials and seal seams with manufacturer's recommended adhesive to eliminate openings in insulation that allow passage of air to surface being insulated.

C. INSULATION INSTALLATION ON VALVES AND PIPE SPECIALTIES:

1. Install cut sections of polyolefin pipe and sheet insulation to valve body.
2. Arrange insulation to permit access to packing and to allow valve operation without disturbing insulation.

3. Install insulation to flanges as specified for flange insulation application.
4. Secure insulation to valves and specialties, and seal seams with manufacturer's recommended adhesive to eliminate openings in insulation that allow passage of air to surface being insulated.

3.09 FIELD-APPLIED JACKET INSTALLATION

Where metal jackets are indicated, install with 2-inch (50-mm) overlap at longitudinal seams and end joints. Overlap longitudinal seams arranged to shed water. Seal end joints with weatherproof sealant recommended by insulation manufacturer. Secure jacket with stainless-steel bands 12 inches (300 mm) o.c. and at end joints.

3.10 FINISHES

Do not field paint aluminum or stainless-steel jackets.

3.11 FIELD QUALITY CONTROL

Perform tests and inspections.

Tests and Inspections:

1. Inspect pipe, fittings, strainers, and valves, randomly selected by Architect, by removing field-applied jacket and insulation in layers in reverse order of their installation. Extent of inspection shall be limited to two locations of straight pipe, two locations of threaded fittings, two locations of welded fittings, two locations of threaded strainers and two locations of welded strainers.

All insulation applications will be considered defective Work if sample inspection reveals noncompliance with requirements.

3.12 PIPING INSULATION SCHEDULE, GENERAL

Acceptable preformed pipe and tubular insulation materials and thicknesses are identified for each piping system and pipe size range. If more than one material is listed for a piping system, selection from materials listed is Contractor's option.

A. ITEMS NOT INSULATED:

Unless otherwise indicated, do not install insulation on the following:

1. Drainage piping located in crawl spaces.
2. Underground piping.
3. Chrome-plated pipes and fittings unless there is a potential for personnel injury.
4. Domestic cold water piping not installed above finished ceiling.

3.13 INDOOR PIPING INSULATION SCHEDULE

A. DOMESTIC HOT WATER AND COLD WATER PIPING INSTALLED ABOVE FINISHED CEILINGS

Insulation shall be one of the following:

1. Flexible Elastomeric: 3/4 inch (19 mm) thick.
2. Mineral-Fiber, Preformed Pipe Insulation, Type I: 1/2 inch (13 mm) thick.
3. Polyolefin: 3/4 inch (19 mm) thick.

B. ROOF DRAIN BODIES:

Insulation shall be one of the following:

1. Flexible Elastomeric: 1 inch (25 mm) thick.
2. Mineral-Fiber, Preformed Pipe Insulation, Type I: 1 inch (25 mm) thick.
3. Polyolefin: 1 inch (25 mm) thick.

3.14 OUTDOOR, ABOVEGROUND PIPING INSULATION SCHEDULE

A. DOMESTIC WATER PIPING:

Insulation shall be one of the following:

1. Cellular Glass: 2 inches (50 mm) thick.
2. Flexible Elastomeric: 2 inches (50 mm) thick.
3. Mineral-Fiber, Preformed Pipe Insulation, Type I: 2 inches (50 mm) thick.
4. Polyolefin: 2 inches (50 mm) thick.

3.15 OUTDOOR, FIELD-APPLIED JACKET SCHEDULE

Install jacket over insulation material. For insulation with factory-applied jacket, install the field-applied jacket over the factory-applied jacket.

If more than one material is listed, selection from materials listed is Contractor's option.

A. PIPING, EXPOSED:

1. Aluminum, Smooth or Corrugated with Z-Shaped Locking Seal: 0.020 inch (0.51 mm) thick.

END OF SECTION

SECTION 15485

ELECTRIC WATER HEATERS

PART 1—GENERAL

1.01 DESCRIPTION

This section specifies domestic electric storage water heaters.

1.02 QUALITY ASSURANCE

A. REFERENCES:

This section contains references to the following documents. They are a part of this section as specified and modified. Where a referenced document contains references to other standards, those documents are included as references under this section as if referenced directly. In the event of conflict between the requirements of this section and those of the listed documents, the requirements of this section shall prevail.

Unless otherwise specified, references to documents shall mean the documents in effect at the time of Advertisement for Bids or Invitation to Bid (or on the effective date of the Agreement if there were no Bids). If referenced documents have been discontinued by the issuing organization, references to those documents shall mean the replacement documents issued or otherwise identified by that organization or, if there are no replacement documents, the last version of the document before it was discontinued. Where document dates are given in the following listing, references to those documents shall mean the specific document version associated with that date, regardless of whether the document has been superseded by a version with a later date, discontinued or replaced.

Reference	Title
UPC	Uniform Plumbing Code

PART 2—PRODUCTS

2.01 COMMERCIAL, ELECTRIC, DOMESTIC WATER HEATER (EWH1)

A. COMMERCIAL, LIGHT-DUTY, STORAGE, ELECTRIC, DOMESTIC-WATER HEATERS:

1. Manufacturers: Subject to compliance with requirements, available manufacturers offering products that may be incorporated into the Work include, but are not limited to, the following:

   a. Lochinvar Corporation (Model EXT040KD)
   b. A. O. Smith Corporation (Model DEL-40)
   c. State Industries (Model PCE 40 20LSA)

2. Standard: UL 174.

3. Storage-Tank Construction: Steel, vertical arrangement.

   a. Tappings: ASME B1.20.1 pipe thread.
   b. Pressure Rating: 150 psig (1035 kPa).
   c. Interior Finish: Comply with NSF 61 barrier materials for potable-water tank linings, including extending lining material into tappings.

4. Factory-Installed Storage-Tank Appurtenances:

   a. Anode Rod: Replaceable magnesium.
   b. Dip Tube: Required unless cold-water inlet is near bottom of tank.
   c. Drain Valve: ASSE 1005.
   d. Insulation: Comply with ASHRAE/IESNA 90.1 or ASHRAE 90.2.
   e. Jacket: Steel with enameled finish.
   f. Heat-Trap Fittings: Inlet type in cold-water inlet and outlet type in hot-water outlet.
   g. Heating Elements: Two; electric, screw-in immersion type; wired for simultaneous operation unless otherwise indicated. Limited to 12 kW total.
   h. Temperature Control: Adjustable thermostat.
   i. Safety Control: High-temperature-limit cutoff device or system.
   j. Relief Valve: ASME rated and stamped for combination temperature-and-pressure relief valves. Include relieving capacity at least as great as heat input, and include pressure setting less than domestic-water heater working-pressure rating. Select relief valve with sensing element that extends into storage tank.

5. Special Requirements: NSF 5 construction with legs for off-floor installation.

B. CAPACITY AND CHARACTERISTICS:

1. Capacity: 40 gal.
2. Recovery: 36 gph at 95 degrees F (22 degrees C) temperature rise.
3. Temperature Setting: 140 degrees F (60 degrees C)
4. Power Demand: 9 KW
5. Heating Elements:

   a. Number of Elements: Two.
   b. Kilowatts Each Element: 4.5 KW
   c. Number of Stages: Two.

6. Electrical Characteristics:

   a. Volts: 208.
   b. Phases: Single or three
   c. Hertz: 60.

2.02 DOMESTIC-WATER HEATER ACCESSORIES

A. DOMESTIC-WATER COMPRESSION TANKS:

1. Manufacturers: Subject to compliance with requirements, available manufacturers offering products that may be incorporated into the Work include, but are not limited to, the following:

    a. AMTROL Inc.
    b. Flexcon Industries.
    c. Honeywell International Inc.
    d. Pentair Pump Group (The); Myers.
    e. A. O. Smith Corporation.
    f. State Industries.
    g. Taco, Inc.

2. Description: Steel pressure-rated tank constructed with welded joints and factory-installed butyl-rubber diaphragm. Include air precharge to minimum system-operating pressure at tank.

3. Construction:

    a. Tappings: Factory-fabricated steel, welded to tank before testing and labeling. Include ASME B1.20.1 pipe thread.
    b. Interior Finish: Comply with NSF 61 barrier materials for potable-water tank linings, including extending finish into and through tank fittings and outlets.
    c. Air-Charging Valve: Factory installed.

4. Capacity and Characteristics:

    a. Working-Pressure Rating: 150 psig (1035 kPa)
    b. Capacity Acceptable: 7 gal. (26.5 L) minimum.

B. DRAIN PANS:

Corrosion-resistant metal with raised edge. Comply with ANSI/CSA LC 3. Include dimensions not less than base of domestic-water heater, and include drain outlet not less than NPS 3/4 (DN 20) with ASME B1.20.1 pipe threads or with ASME B1.20.7 garden-hose threads.

C. PIPING-TYPE HEAT TRAPS:

Field-fabricated piping arrangement according to ASHRAE/IESNA 90.1 or ASHRAE 90.2.

D. HEAT-TRAP FITTINGS:

ASHRAE 90.2.

E. PRESSURE-REDUCING VALVES:

ASSE 1003 for water. Set at 25-psig- (172.5-kPa-) maximum outlet pressure unless otherwise indicated.

F. COMBINATION TEMPERATURE-AND-PRESSURE RELIEF VALVES:

ASME rated and stamped. Include relieving capacity at least as great as heat input, and include pressure setting less than domestic-water heater working-pressure rating. Select relief valves with sensing element that extends into storage tank.

G. PRESSURE RELIEF VALVES:

ASME rated and stamped. Include pressure setting less than domestic-water heater working-pressure rating.

H. VACUUM RELIEF VALVES:

ANSI Z21.22/CSA 4.4.

I. SHOCK ABSORBERS:

ASSE 1010 or PDI-WH 201, Size A water hammer arrester.

2.03 SOURCE QUALITY CONTROL

A. FACTORY TESTS:

Test and inspect domestic-water heaters specified to be ASME-code construction, according to ASME Boiler and Pressure Vessel Code.

Hydrostatically test commercial domestic-water heaters to minimum of one and one-half times pressure rating before shipment.

Electric, domestic-water heaters will be considered defective if they do not pass tests and inspections.

PART 3—EXECUTION

3.01 DOMESTIC-WATER HEATER INSTALLATION

A. COMMERCIAL, ELECTRIC, DOMESTIC-WATER HEATER MOUNTING:

Install commercial, electric, domestic-water heaters on concrete base.

1. Maintain manufacturer's recommended clearances.
2. Arrange units so controls and devices that require servicing are accessible.

3. Install shutoff valves on domestic-water-supply piping to domestic-water heaters and on domestic-hot-water outlet piping.

Install combination temperature-and-pressure relief valves in top portion of storage tanks. Use relief valves with sensing elements that extend into tanks. Extend commercial-water-heater relief-valve outlet, with drain piping same as domestic-water piping in continuous downward pitch, and discharge by positive air gap onto closest floor drain.

Install water-heater drain piping as indirect waste to spill by positive air gap into open drains or over floor drains. Install hose-end drain valves at low points in water piping for electric, domestic-water heaters that do not have tank drains.

Install thermometers on outlet piping of electric, domestic-water heaters.

Install piping-type heat traps on inlet and outlet piping of electric, domestic-water heater storage tanks without integral or fitting-type heat traps.

Fill electric, domestic-water heaters with water.

Charge domestic-water compression tanks with air.

3.02 CONNECTIONS

Where installing piping adjacent to electric, domestic-water heaters, allow space for service and maintenance of water heaters. Arrange piping for easy removal of domestic-water heaters.

3.03 FIELD QUALITY CONTROL

Perform tests and inspections.

1. Manufacturer's Field Service: Engage a factory-authorized service representative to inspect components, assemblies, and equipment installations, including connections, and to assist in testing.
2. Leak Test: After installation, charge system and test for leaks. Repair leaks and retest until no leaks exist.
3. Operational Test: After electrical circuitry has been energized, start units to confirm proper operation.
4. Test and adjust controls and safeties. Replace damaged and malfunctioning controls and equipment.

Electric, domestic-water heaters will be considered defective if they do not pass tests and inspections.

END OF SECTION

SECTION 15621

GAS DUCT HEATERS

PART 1--GENERAL

1.01 DESCRIPTION

A. SCOPE:

This section specifies gas-fired duct heaters for indoor space heating applications.

B. TYPE:

The gas duct heaters shall be in-line, horizontal flow, blow through type with natural gas firing through electric pilot ignition.

C. EQUIPMENT LIST:

Item	Equipment No.
Administration Building Gas Duct Heater	GDH-2151

D. OPERATING REQUIREMENTS:

Equipment No.	Capacity		Electrical voltage/phase
	MBH-Input/output	CFM	
GDH-2151	125/100	3,000	120/1

1.02 QUALITY ASSURANCE

A. REFERENCES:

This section contains references to the following documents. They are a part of this section as specified and modified. Where a referenced document contains references to other standards, those documents are included as references under this section as if referenced directly. In the event of conflict between the requirements of this section and those of the listed documents, the requirements of this section shall prevail.

Unless otherwise specified, references to documents shall mean the documents in effect at the time of Advertisement for Bids or Invitation to Bid (or on the effective date of the Agreement if there were no Bids). If referenced documents have been discontinued by the issuing organization, references to those documents shall mean the replacement documents

issued or otherwise identified by that organization or, if there are no replacement documents, the last version of the document before it was discontinued. Where document dates are given in the following listing, references to those documents shall mean the specific document version associated with that date, regardless of whether the document has been superseded by a version with a later date, discontinued or replaced.

Reference	Title
AGA Z83.9	Gas-fired Duct Furnaces
NFPA 54	National Fuel Gas Code
NFPA 70	National Electrical Code (NEC)

B. COMPATABILITY:

Gas duct heaters shall be of a single manufacturer to assure compatibility and ease of installation and maintenance.

1.03 SUBMITTALS

Submittals shall be provided in accordance with Section 01300 and shall include the following:

1. A copy of this specification section, with addendum updates included, and all referenced and applicable sections, with addendum updates included, with each paragraph check-marked to indicate specification compliance or marked to indicate requested deviations from specification requirements. Check marks (✓) shall denote full compliance with a paragraph as a whole. If deviations from the specifications are indicated, and therefore requested by the Contractor, each deviation shall be underlined and denoted by a number in the margin to the right of the identified paragraph. The remaining portions of the paragraph not underlined will signify compliance on the part of the Contractor with the specifications. The submittal shall be accompanied by a detailed, written justification for each deviation. *Failure to include a copy of the marked-up specification sections, along with justification(s) for any requested deviations to the specification requirements, with the submittal shall be sufficient cause for rejection of the entire submittal with no further consideration.*

2. A copy of the control diagrams, HVAC airflow schematics, and HVAC drawings with addendum updates that apply to the equipment in this section, marked to show specific changes necessary for the equipment proposed in the submittal. If no changes are required, the drawing or drawings shall be marked “No Changes Required.” *Failure to include copies of the relevant drawings with the submittal shall be cause for rejection of the entire submittal with no further review.*

3. Catalog dimensional data.

4. AGA certification or UL certification.

5. Electrical and control wiring diagrams.

6. HVAC controls description and information.

7. Gas heating capacity and burner data.

8. Gas pressure requirement.

9. Gas pressure regulator information.

10. Materials of construction data.

PART 2--PRODUCTS

2.01 ACCEPTABLE PRODUCTS

Duct heaters shall be Modine, Reznor or equal modified to provide the specified features and to meet the specified operating requirements.

2.02 MATERIALS

Materials for components shall be as follows:

Component	Materials
Outer casing	Steel
Inner casing, burner and heat exchanger	409 stainless steel
Drip pan	409 stainless steel

Materials specified are considered the minimum acceptable for the purposes of durability, strength, and resistance to erosion and corrosion. The Contractor may propose alternative materials for the purpose of providing greater strength or to meet required stress limitations. However, alternative materials must provide at least the same qualities as those specified for the purpose.

2.03 EQUIPMENT

A. GENERAL:

Duct heaters shall be completely factory assembled, piped, wired and test fired.

B. CASING:

The outer casing shall be constructed of steel with baked enamel finish. Casing shall have side access for burners and controls.

C. HEAT EXCHANGER:

Heat exchangers shall be of all welded construction, and each heat exchanger shall completely surround the burner assembly to assure quiet even burner operation.

D. BURNER:

Burners shall be die-formed using continuous slot construction. Burners shall be provided with electric pilot ignition.

E. CONTROLS:

Controls shall be rated for a maximum of 1/2 psi gas pressure. Manufacturer's standard controls including following controls shall be provided for duct heaters:

1. 24-volt, two-stage combination gas valve
2. Pressure regulator
3. Pilot cock
4. 100 percent pilot shutoff
5. Safety high limit control
6. Safety pressure switch
7. 24-volt transformer
8. 24-volt single stage thermostat
9. Automatic electric pilot re-ignition kit

2.04 PRODUCT DATA

The following information shall be provided in accordance with Section 01300:

1. Applicable operating and maintenance information specified in Section 01730.

2. Catalog data and dimensional drawings.

3. AGA certification.

PART 3--EXECUTION

3.01 INSTALLATION

Duct heater shall be installed where specified and in accordance with manufacturers recommendations. Duct heater and gas vent shall be installed in compliance with AGA Z83.9, NFPA 54 and NFPA 70, and as recommended by manufacturer.

3.02 PIPING CONNECTIONS

Gas piping shall be installed in compliance with AGA Z83.9 and NFPA 54. Gas piping shall include a union, dirt leg and manual shutoff valve on gas supply line.

3.03 ELECTRICAL CONNECTIONS

Electrical wiring shall be connected to the unit and controls as recommended by the manufacturer and NFPA 70.

END OF SECTION

SECTION 15632

ELECTRIC UNIT HEATERS

PART 1—GENERAL

1.01 DESCRIPTION

A. SCOPE:

This section specifies electric unit heaters for indoor space heating applications.

B. EQUIPMENT LIST:

Item	Equipment No.
Electric Unit Heater 1	EUH-2143

C. OPERATING REQUIREMENTS:

Equipment No.	Type	Heating (kW)	Fan (cfm)	Fan Motor (hp)	Voltage and Phase
EUH-2143	Standard	3	400	1/50	480/3

1.02 QUALITY ASSURANCE

A. REFERENCES:

This section contains references to the following documents. They are a part of this section as specified and modified. In case of a conflict between the requirements of this section and those of the listed documents, the requirements of this section shall prevail.

Unless otherwise specified, references to documents shall mean the documents in effect at the time of Advertisement for Bids or Invitation to Bid (or on the effective date of the Agreement if there were no Bids). If referenced documents have been discontinued by the issuing organization, references to those documents shall mean the replacement documents issued or otherwise identified by that organization or, if there are no replacement documents, the last version of the document before it was discontinued. Where document dates are given in the following listing, references to those documents shall mean the specific document version associated with that date, whether or not the document has been superseded by a version with a later date, discontinued or replaced.

Reference	Title
NFPA	National Electrical Code (NEC)
UL 823	Electric Heaters for Use in Hazardous (Classified) Locations
UL 1025	Electric Air Heaters

1.03 SUBMITTALS

A. The following submittals shall be provided as specified in Section 01300:

1. A copy of this specification section, with addendum updates included, and all referenced and applicable sections, with addendum updates included, with each paragraph check-marked to indicate specification compliance or marked to indicate requested deviations from specification requirements. Check marks (✓) shall denote full compliance with a paragraph as a whole. If deviations from the specifications are indicated, and therefore requested by the Contractor, each deviation shall be underlined and denoted by a number in the margin to the right of the identified paragraph. The remaining portions of the paragraph not underlined will signify compliance on the part of the Contractor with the specifications. The submittal shall be accompanied by a detailed, written justification for each deviation. ***Failure to include a copy of the marked-up specification sections, along with justification(s) for any requested deviations to the specification requirements, with the submittal shall be sufficient cause for rejection of the entire submittal with no further consideration.***

2. A copy of the control diagrams, HVAC airflow schematics, and HVAC drawings with addendum updates that apply to the equipment in this section, marked to show specific changes necessary for the equipment proposed in the submittal. If no changes are required, the drawing or drawings shall be marked “No Changes Required.” Failure to include copies of the relevant drawings with the submittal shall be cause for rejection of the entire submittal with no further review.

3. Manufacturer's catalog and/or other data confirming conformance to specified design, material and equipment requirements.

4. Electrical and control diagrams.

PART 2—PRODUCTS

2.01 MANUFACTURERS

The Owner and Engineer believe the following manufacturers are capable of producing equipment and/or products that will satisfy the requirements of the Section. This statement, however, shall not be construed as an endorsement of a particular manufacturer’s products, nor

shall it be construed that a named manufacture's standard equipment or products will comply with the requirement of this Section. Manufacturer shall be Chromalox, Indeeco, Markel, Reznor, Ruffneck, Trane or Triad.

2.02 STANDARD UNIT HEATERS

A. GENERAL:

Standard unit heater shall be for installation in non-hazardous and non-corrosive environments.

B. DESCRIPTION:

Unit heater cabinet shall be welded and galvanized steel with baked enamel finish. Adjustable discharge louvers shall be mounted horizontally across the cabinet discharge opening. The cabinet construction shall incorporate a means for mounting the unit heater by either suspension rods or mounting brackets. Cabinet-mounted electrical disconnect switch shall be provided.

The fan motor shall be permanently lubricated and thermally protected. Motor voltage and phase shall be as specified.

The heating coil shall be a steel- or copper-clad steel tubular finned heating element in a shock-proof mounting and enclosed within the unit heater cabinet. The heating coil shall be overheat protected.

C. CONTROLS:

A programmable wall-mounted room thermostat shall be provided for each unit heater. Setpoint shall be 45 degrees F unless otherwise specified. See specification Section 15951 for HVAC controls.

2.03 EXPLOSIONPROOF UNIT HEATERS (NOT USED)

2.04 CORROSION RESISTANT UNIT HEATERS (NOT USED)

2.05 PRODUCT DATA

A. The following product data shall be provided in accordance with Section 01300:

1. Applicable operating and maintenance information specified in Section 01730.

PART 3—EXECUTION

Unit heaters shall be installed where specified and in accordance with the manufacturer's recommended clearances from combustibles. Unit heaters shall be installed at 9 feet above finished floor.

END OF SECTION

SECTION 15634

DIRECT GAS-FIRED MAKEUP AIR UNITS

PART 1--GENERAL

1.01 DESCRIPTION

A. SCOPE:

This section specifies outdoor direct gas-fired makeup air units. The units furnished shall provide heated makeup air to membrane area building. The unit shall be corrosion resistant.

B. TYPE:

The unit shall be a 100 percent outside air direct natural gas-fired self-contained makeup air unit with its own automatic controls, motorized discharge damper, filters, fan, intake weather hood, motor, prefabricated curb, direct fired gas heater, and other items as required or specified and shown on the contract drawings. The units must fit in to the available space. See contract drawings for maximum unit size/dimensions.

C. EQUIPMENT:

Item	Equipment No.
Membrane Area Makeup Air	MAU-2140
Makeup air unit motor operated discharge damper	DPR-2140

D. OPERATING REQUIREMENTS:

Equipment number	Fan, cfm	Fan Speed, rpm, max.	Fan Outlet velocity, fpm, max.	Gas Heating Capacity input, MBH	Gas Heating Capacity output, MBH	External static pressure in WC	Fan motor hp min.	Gas pressure psig	Voltage and phase	Remarks
MAU-2140	8,500	1,000	VTF	525	483	1.25	10	1-2	480/3	1

Notes:

VTF: Vendor to furnish.

1. The maximum brake horsepower including drive losses shall not exceed 7.5 hp.

1.02 QUALITY ASSURANCE

A. GENERAL:

The unit shall be AGA approved and bear an AGA label.

B. REFERENCES:

This section contains references to the following documents. They are a part of this section as specified and modified. Where a referenced document contains references to other standards, those documents are included as references under this section as if referenced directly. In the event of conflict between the requirements of this section and those of the listed documents, the requirements of this section shall prevail.

Unless otherwise specified, references to documents shall mean the documents in effect at the time of Advertisement for Bids or Invitation to Bid (or on the effective date of the Agreement if there were no Bids). If referenced documents have been discontinued by the issuing organization, references to those documents shall mean the replacement documents issued or otherwise identified by that organization or, if there are no replacement documents, the last version of the document before it was discontinued. Where document dates are given in the following listing, references to those documents shall mean the specific document version associated with that date, regardless of whether the document has been superseded by a version with a later date, discontinued or replaced.

Reference	Title
AFBMA	Antifriction Bearing Manufacturers Association Standards on Load Ratings and Fatigue Life
AGA	American Gas Association
AMCA	Air Movers and Control Association Test Code and Certified Ratings Program
ARI-430	Air Conditioning and Refrigeration Institute Certification
NEC-1990	National Electrical Code
FM	Factory Mutual
IRI	Industrial Risk Insurers
UL	Underwriters Laboratories

C. FACTORY TESTS:

No specific factory tests are specified.

D. WARRANTY AND PERFORMANCE AFFIDAVIT:

A one-year 100% parts and labor warranty against manufacturing defects or failure of the equipment specified in this section caused by normal wear and tear shall be provided. The

warranty period shall start from the date of final acceptance of the equipment specified in this section.

The unit shall be assembled at the factory and tested at the factory.

1.03 SUBMITTALS

Submittals shall be provided in accordance with Section 01300 and shall include the following:

11. A copy of this specification section, with addendum updates included, and all referenced and applicable sections, with addendum updates included, with each paragraph check-marked to indicate specification compliance or marked to indicate requested deviations from specification requirements. Check marks (✓) shall denote full compliance with a paragraph as a whole. If deviations from the specifications are indicated, and therefore requested by the Contractor, each deviation shall be underlined and denoted by a number in the margin to the right of the identified paragraph. The remaining portions of the paragraph not underlined will signify compliance on the part of the Contractor with the specifications. The submittal shall be accompanied by a detailed, written justification for each deviation. *Failure to include a copy of the marked-up specification sections, along with justification(s) for any requested deviations to the specification requirements, with the submittal shall be sufficient cause for rejection of the entire submittal with no further consideration.*

12. A copy of the control diagrams, HVAC airflow schematics, and HVAC drawings with addendum updates that apply to the equipment in this section, marked to show specific changes necessary for the equipment proposed in the submittal. If no changes are required, the drawing or drawings shall be marked “No Changes Required.” *Failure to include copies of the relevant drawings with the submittal shall be cause for rejection of the entire submittal with no further review.*

13. Certificate of Unit Responsibility attesting that the Contractor has assigned unit responsibility in accordance with the requirements of this section and paragraph 11000-1.02 C. *No other submittal material will be reviewed until the certificate has been received and found to be in conformance with these requirements.*

14. Fan performance curves for the specified operating conditions.

15. Motor data form 11060-A as required under Section 11060.

16. Catalog dimensional data.

17. Demonstrate that the unit fits in the space allocated with adequate access and maintenance clearance.

18. AGA certification or UL certification.

19. AMCA certification.

20. Electrical and control wiring diagrams.

21. HVAC controls description and information.

22. Gas heating capacity and burner data.

23. Gas pressure requirement.

24. Gas pressure regulator information.

PART 2--PRODUCTS

2.01 ACCEPTABLE PRODUCTS

Makeup air units shall be Greenheck, Trane or ReznorInc, modified as necessary to provide the specified features to meet the specified operating requirements.

2.02 MATERIALS

Materials shall be as follows:

Component	Material
Cabinet casing-exterior	18 gauge Galvanized Steel, Heresite coated
Cabinet casing-interior	24 gauge Galvanized Steel, Heresite coated
Floor	14 gauge type 316 stainless steel
Fan housing	Galvanized Steel, Heresite coated
Fan wheel	Galvanized Steel, Heresite coated
Shaft	Stainless Steel
Burner	Stainless Steel Types 430 and 409 or cast aluminum burner with stainless steel mixing plates
Roof curb/structural base	Galvanized Steel, heresite coated
Discharge air damper	Aluminum

Component	Material
Gas manifold and piping and non-stainless components	Heresite coated
Filter box, inlet hood.	Galvanized 18-gage steel, heresite coated

2.03 EQUIPMENT FEATURES

A. BLOWER SECTION:

Main blowers shall be multiple or single backward curved or airfoil centrifugal fans mounted on a solid shaft designed with the first critical speed of the system well above the maximum operating speed. Wheels shall be statically and dynamically balanced to assure quiet, trouble-free operation. All units shall be equipped with belt drives sized at 150 percent of required horsepower and adjustable motor sheaves to allow field changing of blower speed to meet the exact system resistance. Rotating blower components shall have 11/8-inch spring isolators.

B. STRUCTURE:

Outer casing shall overlap the base frame at all surfaces to provide weathertight flashing and shall be attached with gasketed mechanical fasteners. These fasteners shall be field-removable using simple hand tools. Top panels shall be supported from within by structural members and shall be so shaped as to drain water to the outer edge for runoff. All major sections and/or accessories are to be equipped with matching external flanges provided with natural rubber gasketing material. Access doors shall be provided at burner, controls, fan, and filter service areas. These doors shall be readily removable without the use of any tool. When required by code or ordinance, doors may be equipped with one fastener requiring a tool for release.

C. DIRECT FIRED GAS FURNCE:

1. Shall be factory assembled, piped and wired direct gas-fired system of 92% efficiency with a draw through design and field adjustable burner baffles with a direct spark ignition system.

2. Shall have a cast aluminum burner manifold and stainless steel mixing plates. No air from the inside space shall be allowed to pass across the burner at any time. Flame rectification shall be provided by a flame rod. A flame safeguard display shall be included. Burner control shall have a digital coded fault indicator capable of storing the last five faults.

3. Shall be equipped for operation on natural gas with a maximum rated inlet gas pressure of 5 psi. Gas pressure regulator shall be provided.

4. Shall have fault sensors to provide fault conditions to optional digital controller or building controls.

5. Shall have temperature control provided by an electronic 25:1 turndown-ratio modulating discharge air sensor. Amplifier to include a low fire time delay potentiometer/room temperature controller.

6. Shall include the following safety controls:

   a. Manual Reset, High Limit Switch: Main gas valve closes if high-limit temperature is exceeded.

   b. Dual safety shutoff valves shall be provided that do not exceed 120 VAC control signals.

   c. High and low Gas Pressure Switch: Main gas valve closes if high or low pressure switch faults.

   d. A gas vent line shall be included that vents gas from between the safety shutoff valves.

   e. Visual indication: Clear visual signal demonstrating the position of the main gas safety shutoff valves.

   f. Indicate any other requirements such as furnace output, controls, etc.

D. CASING:

Casing shall be supported in such a manner so that maximum allowable air leakage shall not exceed 1 percent and panel deflection shall not exceed an L/240 ratio when subjected to plus or minus 8-inch w.g. static pressure. Interior of the unit shall be insulated with 1-inch thick, 1 1/2 pounds per cubic foot, neoprene coated fiberglass duct liner secured with both adhesive and stick clips. Adhesive and insulation shall meet the requirements of NFPA 90A. Entire unit shall be of double wall construction. Double-wall access door shall be provided.

E. FILTER BOX:

Filter Box section shall have individual filter access doors on both sides and shall have inlet and outlet flanges with boltholes compatible with unit accessories. Filter box shall include 2-inch thick pleated MERV 8 rated filters.

F. MOTOR-OPERATED DISCHARGE DAMPER:

Provide motor-operated discharge damper. Damper shall of aluminum construction and interlocked with the makeup air unit fan.

2.04 MOTOR AND DRIVE UNIT

The motor shall be Type 2 (TEFC) as specified in section 11060. Unless specified otherwise in the particular equipment specifications, motors shall be provided in compliance with these specifications. Motors 1 hp and larger shall be the energy-efficient type. Motor shall be mounted and isolated internally in the fan cabinet.

V-belt drive shall be as specified in accordance with the requirements specified by the Design Engineer. This specification will include general requirements which are applicable to all mechanical equipment. The Contractor is responsible for ensuring that all mechanical equipment meets the requirements of this section in addition to the specific requirements of the individual equipment specification section.

All belt driven fans shall be furnished with adjustable pitch sheaves and adjustable motor bases suitable for a plus or minus 5 percent adjustment in operating speed. Each fan shall be installed with a motor disconnect switch, NEMA 4X nonmetallic enclosure.

2.05 INSTRUMENTATION

Provide all instrumentation required for complete control and monitoring of the unit in accordance with Section 17900 and as shown on the drawings. Instrumentation to be provided with the unit includes but is not limited to the following:

1. Room/space temperature sensor.
2. Supply air temperature and pressure sensor.
3. Dirty filter switch.

2.06 CONTROLS

Control descriptions are provided in Specification Sections 15951 and 17900. Control panel shall be provided with the functionality described in the control descriptions, in accordance with contract drawings and Div.16 specifications. See specific requirements of Specification Section 16176-Local Control Panels, 16850-Fire Alarm System, Div. 13 Fire Suppression Systems and Process and Instrumentation diagrams.

2.07 PRODUCT DATA

The following information shall be provided in accordance with Section 01300:

1. Applicable operation and maintenance information in accordance with the requirements specified by the Design Engineer.

2. AFBMA bearing ratings for the fan and the motor at design conditions.

3. Dimensional drawings of makeup air unit.

4. Heating input, output, and fan performance data.

5. Certification that the units have been tested and rated in accordance with

the applicable AGA standard test code and certified ratings program.

6. NEC and UL labels.

7. Wiring diagrams.

2.08 SPARE PARTS

One extra set of V-belts and one set of 2-inch prefilters shall be provided for each unit. Spare parts shall be tagged and stored in accordance this paragraph. Spare parts shall be tagged by project equipment number and identified as to part number, equipment manufacturer, and subassembly component (if appropriate). Spare parts subject to deterioration such as ferrous metal items and electrical components shall be properly protected by lubricants or desiccants and encapsulated in hermetically sealed plastic wrapping. Spare parts with individual weights less than 50 pounds and dimensions less than 2 feet wide, or 18 inches high, or 3 feet in length shall be stored in a wooden box with a hinged wooden cover and locking hasp. Hinges shall be strap type. The box shall be painted and identified with stenciled lettering stating the name of the equipment, equipment numbers, and the words "spare parts." A neatly typed inventory of spare parts shall be taped to the underside of the cover.

PART 3--EXECUTION

3.01 INSTALLATION

Makeup air units shall be installed as specified and in accordance with manufacturer’s recommendations. Gas piping shall be connected as per manufacturer’s recommendations. Fan shall comply with noise requirements and control as specified by the Design Engineer. This section will specify the maximum permissible noise level for a complete piece of mechanical equipment located within or outside a structure. A complete piece of equipment includes the driver and driven equipment plus any intermediate couplings, gears and auxiliaries.

Except for power conduits and cables to the fan motors and to the control panel, all control and power conduits and cables shall be provided by HVAC Contractor.

3.02 MANUFACTURER’S SERVICES

The Manufacturer shall furnish the services of qualified factory representative for inspection and installation for a total of two days at eight hours/day (excluding travel time).

The Manufacturer shall furnish the services of qualified factory representative for start-up, testing, and instruction of operating personnel for a total of two days at eight hours/day (excluding travel time) and total of one trip to the jobsite.

No additional payment shall be made for services required under this article.

3.03 TESTING

After completion of installation, each makeup air unit shall be completely field-tested and balanced in accordance with the specifications to guarantee compliance with these specifications.

Field testing shall be in accordance with the requirements specified. This specification will contain requirements for the Contractor's performance in documenting testing work required under this contract. In addition, this specification will contain requirements the for the Contractor's performance during installed performance testing of all mechanical, electrical, instrumentation, and HVAC equipment and systems, including structures for watertight construction. This specification will supplement but will not supersede specific testing requirements found elsewhere in the project manual.

Labor and services necessary to test, adjust, and balance under actual operating conditions air and hydronic systems design flow rates are specified in this project manual. Nothing herein shall be construed as relieving the Contractor of his overall responsibility of this portion of the work.

END OF SECTION

SECTION 15636

INDIRECT GAS-FIRED MAKEUP AIR UNITS

PART 1--GENERAL

1.01 DESCRIPTION

A. SCOPE:

This section specifies outdoor indirect gas-fired makeup air units. The units furnished shall provide heated makeup air to headworks building. The unit shall be corrosion resistant.

B. TYPE:

The unit shall be a 100 percent outside air indirect natural gas-fired self-contained makeup air unit with its own automatic controls, motorized discharge damper, filters, fan, motor, prefabricated curb, heat exchanger, discharge plenum and other items as required or specified and shown on the contract drawings. The units must fit in to the available space. See contract drawings for maximum unit size/dimensions.

C. EQUIPMENT:

Item	Equipment No.
Headworks Area Makeup Air Unit 1	MAU-2121
Headworks Area Makeup Air Unit 2	MAU-2122
Makeup air unit 1 motor operated discharge damper	DPR-2121
Makeup air unit 2 motor operated discharge air damper	DPR-2122

D. OPERATING REQUIREMENTS:

Equipment number	Fan, cfm	Fan Speed, rpm, max.	Fan Outlet velocity, fpm, max.	Gas Heating Capacity input, MBH	Gas Heating Capacity output, MBH	External static pressure in WC	Fan motor hp min.	Gas pressure psig	Voltage and phase	Remarks
MAU-2121	14,500	960	VTF	800	640	1.5	20	1-2	480/3	1
MAU-2122	14,500	960	VTF	800	640	1.5	20	1-2	480/3	1

Notes:
VTF: Vendor to furnish.
2. The maximum brake horsepower including drive losses shall not exceed 17 hp.

1.02 QUALITY ASSURANCE

A. GENERAL:

The unit shall be AGA approved and bear an AGA label.

B. REFERENCES:

This section contains references to the following documents. They are a part of this section as specified and modified. Where a referenced document contains references to other standards, those documents are included as references under this section as if referenced directly. In the event of conflict between the requirements of this section and those of the listed documents, the requirements of this section shall prevail.

Unless otherwise specified, references to documents shall mean the documents in effect at the time of Advertisement for Bids or Invitation to Bid (or on the effective date of the Agreement if there were no Bids). If referenced documents have been discontinued by the issuing organization, references to those documents shall mean the replacement documents issued or otherwise identified by that organization or, if there are no replacement documents, the last version of the document before it was discontinued. Where document dates are given in the following listing, references to those documents shall mean the specific document version associated with that date, regardless of whether the document has been superseded by a version with a later date, discontinued or replaced.

Reference	Title
AFBMA	Antifriction Bearing Manufacturers Association Standards on Load Ratings and Fatigue Life
AGA	American Gas Association
AMCA	Air Movers and Control Association Test Code and Certified Ratings Program
ARI-430	Air Conditioning and Refrigeration Institute Certification
NEC-1990	National Electrical Code
FM	Factory Mutual
IRI	Industrial Risk Insurers
UL	Underwriters Laboratories

C. FACTORY TESTS:

No specific factory tests are specified.

D. WARRANTY AND PERFORMANCE AFFIDAVIT:

A one-year 100% parts and labor warranty against manufacturing defects or failure of the equipment specified in this section caused by normal wear and tear shall be provided. The warranty period shall start from the date of final acceptance of the equipment specified in this

section.

No performance affidavit above and beyond the inclusion of the checkmarked section(s) as specified in the Submittals paragraph of this section is specified.

1.03 SUBMITTALS

Submittals shall be provided in accordance with Section 01300 and shall include the following:

25. A copy of this specification section, with addendum updates included, and all referenced and applicable sections, with addendum updates included, with each paragraph check-marked to indicate specification compliance or marked to indicate requested deviations from specification requirements. Check marks (✓) shall denote full compliance with a paragraph as a whole. If deviations from the specifications are indicated, and therefore requested by the Contractor, each deviation shall be underlined and denoted by a number in the margin to the right of the identified paragraph. The remaining portions of the paragraph not underlined will signify compliance on the part of the Contractor with the specifications. The submittal shall be accompanied by a detailed, written justification for each deviation. *Failure to include a copy of the marked-up specification sections, along with justification(s) for any requested deviations to the specification requirements, with the submittal shall be sufficient cause for rejection of the entire submittal with no further consideration.*

26. A copy of the control diagrams, HVAC airflow schematics, and HVAC drawings with addendum updates that apply to the equipment in this section, marked to show specific changes necessary for the equipment proposed in the submittal. If no changes are required, the drawing or drawings shall be marked “No Changes Required.” *Failure to include copies of the relevant drawings with the submittal shall be cause for rejection of the entire submittal with no further review.*

27. Certificate of Unit Responsibility attesting that the Contractor has assigned unit responsibility in accordance with the requirements of this section and paragraph 11000-1.02 C. *No other submittal material will be reviewed until the certificate has been received and found to be in conformance with these requirements.*

28. Fan performance curves for the specified operating conditions.

29. Motor data form 11060-A as required under Section 11060.

30. Catalog dimensional data.

31. Demonstrate that the unit fits in the space allocated with adequate access and maintenance clearance.

32. AGA certification or UL certification.

33. AMCA certification.

34. Electrical and control wiring diagrams.

35. HVAC controls description and information.

36. Gas heating capacity and burner data.

37. Gas pressure requirement.

38. Gas pressure regulator information.

PART 2--PRODUCTS

2.01 ACCEPTABLE PRODUCTS

Makeup air units shall be Greenheck, Trane or Reznor Inc., modified as necessary to provide the specified features to meet the specified operating requirements.

2.02 MATERIALS

Materials shall be as follows:

Component	Material
Cabinet casing-exterior	18 gauge Galvanized Steel, Heresite coated
Cabinet casing-interior	24 gauge Galvanized Steel, Heresite coated
Floor	14 gauge type 316 stainless steel
Fan housing	Galvanized Steel, Heresite coated
Fan wheel	Galvanized Steel, Heresite coated
Shaft	Stainless Steel
Heat exchanger	Stainless Steel Types 430 and 409
Burner	Stainless Steel Types 430 and 409
Roof curb/structural base	Galvanized Steel, heresite coated
Discharge air damper	Aluminum

Component	Material
Gas manifold and piping and non-stainless components	Heresite coated
Filter box, inlet hood.	Galvanized 18-gage steel, heresite coated

2.03 EQUIPMENT FEATURES

A. BLOWER SECTION:

Main blowers shall be multiple or single backward curved or airfoil centrifugal fans mounted on a solid shaft designed with the first critical speed of the system well above the maximum operating speed. Wheels shall be statically and dynamically balanced to assure quiet, trouble-free operation. All units shall be equipped with belt drives sized at 150 percent of required horsepower and adjustable motor sheaves to allow field changing of blower speed to meet the exact system resistance. Rotating blower components shall have 1-inch spring isolators.

B. STRUCTURE:

Outer casing shall overlap the base frame at all surfaces to provide weathertight flashing and shall be attached with gasketed mechanical fasteners. These fasteners shall be field-removable using simple hand tools. Top panels shall be supported from within by structural members and shall be so shaped as to drain water to the outer edge for runoff. All major sections and/or accessories are to be equipped with matching external flanges provided with natural rubber gasketing material. Access doors shall be provided at burner, controls, fan, and filter service areas. These doors shall be readily removable without the use of any tool. When required by code or ordinance, doors may be equipped with one fastener requiring a tool for release.

C. HEATING SECTION–GAS:

The heater shall have multiple flue passes. The primary heating surface shall be 16-gage 430 stainless steel with the combustion chamber in the shape of a true cylinder. The flue gases shall pass through a one-pass tubular economizer of secondary heating surface. The tubular economizer shall be equipped with tabulators. All economizer tubes shall be accessible for cleaning through an external access panel. This access shall be located on the same side as the burner and induced draft fan.

D. BURNER–GAS:

The power gas burner shall be factory mounted and wired. It shall be equipped with high- tension spark-ignited gas pilot, electronic primary safety control, automatic gas control valve, main gas regulator, pilot gas regulator, pilot gas cock, pilot assembly, and all components necessary to make a complete unitary burner assembly. The burner shall be designed for use with the particular furnace, to provide one responsibility for overall performance. The gas burner shall be of the modulating type. The minimum burner turn down ratio shall be 10 to 1.

E. CASING:

Casing shall be supported in such a manner so that maximum allowable air leakage shall not exceed 1 percent and panel deflection shall not exceed an L/240 ratio when subjected to plus or minus 8-inch w.g. static pressure. Interior of the unit shall be insulated with 1-inch thick, 1 1/2 pounds per cubic foot, neoprene coated fiberglass duct liner secured with both adhesive and stick clips. Adhesive and insulation shall meet the requirements of NFPA 90A. Entire unit shall be of double wall construction. Double-wall access door shall be provided.

F. FILTER BOX:

Filter Box section shall have individual filter access doors on both sides and shall have inlet and outlet flanges with boltholes compatible with unit accessories. Filter box shall include 2-inch thick pleated MERV 8 rated filters.

G. INDUCED DRAFT FAN:

The factory installed induced draft fan shall be direct driven by single purpose self-ventilating motor and controlled separately from main blowers. The design shall be such that cooling air is drawn over the inboard motor bearing and shaft. The blower shall discharge into a stack to carry all flue gas away from the unit.

H MOTOR OPERATED DISCHARGE DAMPER:

Provide motor operated discharge damper. Damper shall of aluminum construction and interlocked with the makeup air unit fan.

2.04 MOTOR AND DRIVE UNIT

The motor shall be Type 2 (TEFC) as specified in section 11060. Unless specified otherwise in the particular equipment specifications, motors shall be provided in compliance with these specifications. Motors 1 hp and larger shall be the energy-efficient type. Motor shall be mounted and isolated internally in the fan cabinet.

V-belt drive shall be as specified in accordance with the requirements specified by the Design Engineer. This specification will include general requirements which are applicable to all mechanical equipment. The Contractor is responsible for ensuring that all mechanical equipment meets the requirements of this section in addition to the specific requirements of the individual equipment specification section.

All belt driven fans shall be furnished with adjustable pitch sheaves and adjustable motor bases suitable for a plus or minus 5 percent adjustment in operating speed. Each fan shall be installed with a motor disconnect switch, NEMA 4X nonmetallic enclosure.

2.05 INSTRUMENTATION

Provide all instrumentation required for complete control and monitoring of the unit in accordance with Section 17900 and 15951 and as shown on the drawings. Instrumentation to be provided with the unit includes but is not limited to the following:

4. Room/space temperature sensor.
5. Supply air temperature and pressure sensor
6. Dirty filter switch.

2.06 CONTROLS

Control descriptions are provided in Specification Sections 15951 and 17900. Control panel shall be provided with the functionality described in the control descriptions, in accordance with contract drawings and Div.16 specifications. See specific requirements of Specification Section 16176-Local Control Panels, 16850-Fire Alarm System, Div. 13 Fire Suppression Systems and Process and Instrumentation diagrams.

2.07 PRODUCT DATA

The following information shall be provided in accordance with Section 01300:

8. Applicable operation and maintenance information in accordance with the requirements specified by the Design Engineer.

9. AFBMA bearing ratings for the fan and the motor at design conditions.

10. Dimensional drawings of makeup air unit.

11. Heating input, output, and fan performance data.

12. Certification that the units have been tested and rated in accordance with the applicable AGA standard test code and certified ratings program.

13. NEC and UL labels.

14. Wiring diagrams.

2.08 SPARE PARTS

One extra set of V-belts and one set of 2-inch prefilters shall be provided for each unit. Spare parts shall be tagged and stored in accordance this paragraph. Spare parts shall be tagged by project equipment number and identified as to part number, equipment manufacturer, and subassembly component (if appropriate). Spare parts subject to deterioration such as ferrous metal items and electrical components shall be properly protected by lubricants or desiccants and encapsulated in hermetically sealed plastic wrapping. Spare parts with individual weights less than 50 pounds and dimensions less than 2 feet wide, or 18 inches high, or 3 feet in length shall be stored in a wooden box with a hinged wooden cover and locking hasp. Hinges shall be strap type. The box shall be painted and identified with stenciled lettering stating the name of the equipment, equipment numbers, and the words "spare parts." A neatly typed inventory of spare parts shall be taped to the underside of the cover.

PART 3--EXECUTION

3.01 INSTALLATION

Makeup air units shall be installed as specified and in accordance with manufacturer's recommendations. Gas piping shall be connected as per manufacturer's recommendations. Fan shall comply with noise requirements and control as specified by the Design Engineer. This section will specify the maximum permissible noise level for a complete piece of mechanical equipment located within or outside a structure. A complete piece of equipment includes the driver and driven equipment plus any intermediate couplings, gears and auxiliaries.

Except for power conduits and cables to the fan motors and to the control panel, all control and power conduits and cables shall be provided by HVAC Contractor.

3.02 MANUFACTURER'S SERVICES

The Manufacturer shall furnish the services of qualified factory representative for inspection and installation for a total of two days at eight hours/day (excluding travel time.

The Manufacturer shall furnish the services of qualified factory representative for startup, testing, and instruction of operating personnel for a total of two days at eight hours/day (excluding travel time) and total of one trip to the jobsite.

No additional payment shall be made for services required under this article.

3.03 TESTING

After completion of installation, each makeup air unit shall be completely field-tested and balanced in accordance with the specifications to guarantee compliance with these specifications.

Field testing shall be in accordance with the requirements specified. This specification will contain requirements for the Contractor's performance in documenting testing work required under this contract. In addition, this specification will contain requirements for the Contractor's performance during installed performance testing of all mechanical, electrical, instrumentation, and HVAC equipment and systems, including structures for watertight construction. This specification will supplement but will not supersede specific testing requirements found elsewhere in the project manual.

Labor and services necessary to test, adjust, and balance under actual operating conditions air and hydronic systems design flow rates are specified in this project manual. Nothing herein shall be construed as relieving the Contractor of his overall responsibility of this portion of the work.

END OF SECTION

SECTION 15781

MINI SPLIT SYSTEM AIR CONDITIONING UNITS

PART 1--GENERAL

1.01 DESCRIPTION

A. SCOPE:

This section specifies mini split ductless air conditioning units. The system will be comprised of an indoor evaporator unit and outdoor air cooled condensing units and heat pump condensing units.

B. TYPE:

The compressor/condenser unit shall consist of direct driven scroll type compressor, condenser fan and motor, condenser coil, motor controllers, controls, internal wiring, and electrical devices. The unit shall be equipped with all accessories and controls required to provide a complete heating, cooling, and ventilation package.

C. EQUIPMENT:

Item	Equipment
Data Room Air Conditioning Unit	ACU-2163
Data Room ACU Condensing Unit	CU-2163
Administration Building Stair Air Conditioning Unit 1	ACU-2164
Administration Building Stair Air Conditioning Unit 2	ACU-2165
Adminstation Building Stair Air Condtioning Units 1 & 2 Heat Pump Condensing Unit	CU-2164

1.02 QUALITY ASSURANCE

A. REFERENCES:

This section contains references to the following documents. They are a part of this section as specified and modified. Where a referenced document contains references to other standards, those documents are included as references under this section as if referenced directly. In the event of conflict between the requirements of this section and those of the listed documents, the requirements of this section shall prevail.

Unless otherwise specified, references to documents shall mean the documents in effect at the time of Advertisement for Bids or Invitation to Bid (or on the effective date of the Agreement if there were no Bids). If referenced documents have been discontinued by the issuing organization, references to those documents shall mean the replacement documents issued or otherwise identified by that organization or, if there are no replacement documents,

the last version of the document before it was discontinued. Where document dates are given in the following listing, references to those documents shall mean the specific document version associated with that date, regardless of whether the document has been superseded by a version with a later date, discontinued or replaced.

Reference	Title
AFBMA 9	Load Ratings and Fatigue Life for Ball Bearings
AFBMA 11	Load Ratings and Fatigue Life for Roller Bearings
AMCA	Certified Ratings Program
ARI 410	Forced-Circulation Air-Cooling and Air-Heating Coils
NFPA 70	National Electrical Code (NEC)
AHRAE 90.1	ASHRAE standard for efficiency
NEC	National Electrical and Local Code
NRTL & ETL	Nationally Recognized Testing Laboratory (NRTL) and shall bear the ETL label
ISO 9001 and ISO 14001	International Standard Organization

B. OPERATING REQUIREMENTS:

Equipment No.	Total Cooling Capacity, Btu/h	Sensible Cooling Capacity, Btu/h	Heating Capcity, Btuh at 17 deg F	Mounting	SEER, min.	Airflow, cfm	Voltage/ PH
ACU-2163	12,000	10,000	None	Ceiling	13.5	390-530	208-230/1
ACU-2164	10,000	7,000	7,000	Wall	16.0	Vedor to furnish	208-230/1
ACU-2165	10,000	7,000	7,000	Wall	16.0	Vendor to furnish	208/230/1

Deviations from specified condenser criteria, required to achieve overall cooling performance shall be identified in the submittal.

1.03 ENVIRONMENTAL CONDITIONS

See Section 01800. The units will be located outside at a wastewater treatment plant and shall be suitable for outside air conditions in Chapel Hills, North Carolina.

1.04 SUBMITTALS

Submittals shall comply with the requirements of Sections 01300 and 11000 and shall include the following:

1. A copy of this specification section, with addendum updates included, and all referenced and applicable sections, with addendum updates included, with each paragraph check-marked to indicate specification compliance or marked to indicate requested deviations from specification requirements. Check marks (✓) shall denote full compliance with a paragraph as a whole. If deviations from the specifications are indicated, and therefore requested by the Contractor, each deviation shall be underlined and denoted by a number in the margin to the right of the

identified paragraph. The remaining portions of the paragraph not underlined will signify compliance on the part of the Contractor with the specifications. The submittal shall be accompanied by a detailed, written justification for each deviation. ***Failure to include a copy of the marked-up specification sections, along with justification(s) for any requested deviations to the specification requirements, with the submittal shall be sufficient cause for rejection of the entire submittal with no further consideration.***

2. A copy of the control diagrams and mechanical drawings with addendum updates that apply to the equipment in this section, marked to show specific changes necessary for the equipment.

3. Manufacturer's catalog and/or other data confirming conformance to specified design, material and equipment requirements.

4. Cooling and heating performance data.

5. Equipment drawings showing equipment dimensions and service entry points.

PART 2—PRODUCTS

2.01 MANUFACTURED UNITS

A. CONDENSING UNIT: (CU-2163 and CU-2164)

1. Weatherproofed unit on heavy gage integral steel base include compressors, condensing coils, fans and motors, controls and holding charge of R-410A. Factory assembled and wired.
2. Compressor shall be DC inverter driven twin rotary type.
3. Compressors with internal motor overload protection.
4. 18 gage hot-dipped galvanized steel casing.
5. Exterior surfaces cleaned, phosphatized, coated with epoxy resin primer, Blygold and an enamel finish. Coils shall be coated with Blygold
6. Vertical discharge, direct-drive condenser fans with aluminum blades, zinc-plated steel hubs.
7. Condenser motor with built-in current and thermal overload protection.
8. 24 volt control circuit including fusing and control power transformer.
9. Magnetic contactors for compressors and cooling low ambient fan switches.
10. High and low pressure controls.
11. Controls to prevent compressors from simultaneous start-up.
12. Anti-short cycle timers.
13. Low ambient kit for operation down to 0 degrees F.
14. Unit shall be wired for operation as shown on Drawings.
15. Rubber in-shear isolators.
16. All joints, seams, and soldered connections shall be protective coated.

17 The condesing unit CU-2163 shall serve single indoor unit ACU-2163
18 The heat pump condensing unit CU-2164 shall serve two indoor units ACU-20164 and ACU-2065.

B. INDOOR CEILING-AND WALL MOUNTED UNITS: (ACU-2163, ACU-2164 & 2165

1. Factory assembled blower coil unit shall include coil, condensate drain pan, fan, motor, filters and controls.
2. Coil to have aluminum fin surface mechanically bonded to copper tubing, Coils shall be coated with Blygold.
3. Forward curved, dynamically and statically balanced fans
4. Furnish all refrigeration specialties as required.
5. Low voltage terminal board, fan contractor, check valves and evaporator defrost control.
6. All joints, seams, and soldered connections shall be protective coated.
7. Provide auto vane controller for indoor unit.
8. Filters: Provide manufacturer's standard filter
9. Provide wall mounted wired thermostat for each unit.

C ACCESSORIES:

1 Insulated pre charged refrigerant suction and liquip piping as required
2 Condenstate piping
3 Cover for refrigerant and condensate piping .
4 Port adaptor required for one condesing unit controlling two indoor units
5 Wall mouted thermostat for each system
6 Any other items required for operation and control of the system.

2.02 SOURCE QUALITY CONTROL

Perform the following tests and inspections at the factory:

1. Condenser coil shall be pressure and leak tested to 425 pounds per square inch gage air pressure.
2. Fan wheels and shafts shall be statically and dynamically balanced.
3. Refrigeration system and controls shall be tested prior to shipment.

2.03 MANUFACTURER

Provide Mini Split System unit manufactured by one of the following:

1. MR. Slim unit by Mitsubishi Electric Company

2. Or approved equal.

PART 3--EXECUTION

3.01 INSTALLATION

The air conditioning unit shall be installed as shown in the Contract drawings and in accordance with manufacturer's recommendations. Mount thermostat at locations shown on drawings and wire to unit controls.

3.02 TESTING

After completion of installation, the air conditioning unit shall be completely field tested to verify compliance with these specifications.

END OF SECTION

SECTION 15828

CENTRIFUGAL FIBERGLASS REINFORCED PLASTIC (FRP) FANS

PART 1--GENERAL

1.01 DESCRIPTION

A. SCOPE:

This section specifies centrifugal belt-driven fiberglass reinforced plastic (FRP), fans for service of saturated foul air with high concentrations of hydrogen sulfide and organic sulfides, and at times containing dilute sulfuric acid, methane and gasoline vapors. Fans shall be high pressure, backward inclined or backward curved impeller type.

B. EQUIPMENT LIST:

Description	Equipment No.
Foul Air Headworks Odor Control Unit Exhaust Fan	F-2111
Foul Air Membrane Area Odor Control Unit Exhaust Fan	F-2131

The requirements of Section 13230 shall apply to all aspects of this Specification.

1.02 PERFORMANCE REQUIREMENTS

A. GENERAL:

Fans specified in this section shall be designed and selected for continuous outdoor operation with air containing corrosive and flammable vapors and gases generated from the treatment and conveyance of municipal wastewater and stabilization and processing of solids from municipal wastewater treatment processes. Vapors and gases may be expected to include methane, hydrogen sulfide, chlorine gas, sulfur dioxide, gasoline vapors, ammonia, and water saturated air. The air stream may also be expected to contain droplets of dilute sulfuric acid. Air stream temperatures are expected to vary between 50 and 95 degrees F.

B. OPERATING REQUIREMENTS:

The fans shall be selected to achieve the design capacity at no greater than 90 percent of maximum recommended RPM. Fans shall be non-overloading at all points on their curve. Capacity shall be determined in accordance with AMCA Standard 210, cataloged performance licensed to bare the AMCA Rating Seal prior to bid.

Equipment Number	Capacity, cfm (see note 1)	Total static pr. In. W.C.	Fan size, Inches	Maximum fan speed, rpm	Maximum BHP	Motor HP	Motor Type	Electrical V/PH/Hz	Remarks
F-2111	31,000	10.00	48	1180	67	75	3	480/3/60	1, 2, 3,4
F-2131	23,000	10.00	42	1320	50	60	3	480/3/60	1, 2, 3

Notes:

1 Fan manufacturer shall verify the total pressure drop with scrubber manufacturer. Total pressure includes 3.5 inches of losses through ductwork and greasefilter/mist eliminator.
2 Provide variable frequency drive for each fan.
3 Provide explosion proof fan motor.
4 Minimum shut off pressure shall be 11.7 in.W.C.
5 5 Minimum shut off pressure shall be 11.3 in. W.C.

C. SOUND POWER LEVELS:

Octave band sound power levels, measured in accordance with ANSI S1-21, ASHRAE 36, AMCA 300, and subsequent revisions of these standards, shall not exceed the following values:

Octave Band Total Sound Power Level, dB re: 10^{-12} Watts

Equipment No.	Octave band center frequency, hertz								
	63	125	250	500	1000	2000	4000	8000	Overall
F-2111	106.4	106.8	104.2	98.8	94.2	91.8	88.8	85.4	111.2
F-2131	103.3	106.3	102.3	97.9	92.9	90.3	88.3	84.9	109.6

Fans shall be tested and rated for sound power levels in accordance with AMCA Standards 300 and 301. Sound power rating shall be decibels (reference 10^{-12} watts) in eight octave bands. Sound dBA levels only are not acceptable.

Sound Pressure Level Outside the Fan

Description	Estimated sound outside fan, dBA
Sound pressure level with ducted inlet and ducted outlet	79

The estimated sound pressure level outside the fan is measured at 5.0 feet when both inlet and outlet are ducted.

D. BALANCE AND VIBRATION:

Fans specified in this section shall be balanced at the factory to operate without vibration throughout the full operating range specified. Vibration criteria shall not exceed limits specified in Section 11021.

1.03 UNIT RESPONSIBILITY:

In accordance with paragraph 11000-1.02 C, the Contractor shall cause the fans and motors and adjustable frequency drives to be provided by the fan manufacturer, who shall be fully responsible for the engineering, design, selection, and operation of all systems and components furnished therewith.

A certification of unit responsibility shall be provided, as specified in Section 01999, executed by the responsible manufacturer, and shall attest that the engineering, design, and selection of all systems and component shall be conducted by the respective manufacturers. The Contractor is advised that the Engineer will not process or review any submittal materials unless or until an acceptable certificate of unit responsibility is provided.

Additionally, the Contractor shall cause the responsible equipment manufacturer to supply qualified installation technicians to supervise the unloading, erection, placement, installation, adjustment, testing, and initial start-up of the equipment specified under this section. Nothing in the provision, however, shall be construed as relieving the Contractor of responsibility for the overall quality and completeness of the work.

1.04 QUALITY ASSURANCE

A. REFERENCES:

This section contains references to the following documents. They are a part of this section as specified and modified. Where a referenced document contains references to other standards, those documents are included as references under this section as if referenced directly. In the event of conflict between the requirements of this section and those of the listed documents, the requirements of this section shall prevail.

Unless otherwise specified, references to documents shall mean the documents in effect at the time of Advertisement for Bids or Invitation to Bid (or on the effective date of the Agreement if there were no Bids). If referenced documents have been discontinued by the issuing organization, references to those documents shall mean the replacement documents issued or otherwise identified by that organization or, if there are no replacement documents, the last version of the document before it was discontinued. Where document dates are given in the following listing, references to those documents shall mean the specific document version associated with that date, regardless of whether the document has been superseded by a version with a later date, discontinued or replaced.

Reference	Title
AMCA Standard 210	Air Movement and Control Association Test Code and Certified Ratings Program
AMCA Standard 211	Certified Rating Program for Air Moving Devices
AMCA Standard 300	Test Code for Sound Rating
AMCA Standard 301	Methods for Calculating Fan Sound Ratings from Laboratory Test Data
ASTM D4167	Fiber-Reinforced Plastic Fans and Blowers
ASTM E84	Standard Method of Test for Surface Burning Characteristics of Building Materials
NEC	National Electric Code

FRP fabrication shall be in accordance with the National Bureau of Standard Voluntary Product Standards PS-15-69. FRP construction quality shall be in accordance with Section 13230.

B. CERTIFICATION:

Fan shall bear the AMCA rating seal. Fan shall be from a manufacturer's catalog product that bears the AMCA seal, and is listed on AMCA's web site, prior to bid.

C FACTORY TESTS:

Each fan shall be subjected to a factory non-witnessed performance test in accordance with the requirements of AMCA standards. Fan shall meet the performance requirements as specified.

1.05 SUBMITTALS

Submittals shall comply with all requirements set forth in Section 01300 and shall include the following:

1. A copy of this specification section, with addendum updates included, and all referenced and applicable sections, with addendum updates included, with each paragraph check-marked to indicate specification compliance or marked to indicate requested deviations from specification requirements. Check marks (✓) shall denote full compliance with a paragraph as a whole. If deviations from the specifications are indicated, and therefore requested by the Contractor, each deviation shall be underlined and denoted by a number in the margin to the right of the identified paragraph, referenced to a detailed written explanation of the reasons for requesting the deviation. The Engineer shall be the final authority for determining acceptability of requested deviations. The remaining portions of the paragraph not

underlined will signify compliance on the part of the Contractor with the specifications. *Failure to include a copy of the marked-up specification sections, along with justification(s) for any requested deviations to the specification requirements, with the submittal shall be sufficient cause for rejection of the entire submittal with no further consideration.*

2. A copy of the contract document control diagrams and process and instrumentation diagrams relating to the submitted equipment, with addendum updates that apply to the equipment in this section, marked to show specific changes necessary for the equipment proposed in the submittal. If no changes are required, the drawing or drawings shall be marked *"no changes required"*. *Failure to include copies of the relevant drawings with the submittal shall be cause for rejection of the entire submittal with no further review.*

3. Certificate of Unit Responsibility Attesting that the Contractor has assigned, and that the manufacturer accepts, unit responsibility in accordance with the requirements of this Section and paragraph 11000-1.02 C. *No other submittal material will be reviewed until the certificate has been received and found to be in conformance with these requirements*

4. Performance curves for the specified operation conditions.

5. Motor Data Form 11060-A in accordance with Section 11060.

6. Dimensioned drawing including motor V-belt drive and base.

7. Certification that the units have been tested and rated in accordance with the applicable AMCA Standard Test Code and Certified Ratings Program and that they bear the AMCA seal.

8. Sound power level ratings of fan and motor in eight octave bands in accordance with AMCA Standards 300 and 301.

9. Octave band sound power levels generated by the fan with motor at the specified/scheduled operating point.

10. Sound pressure level outside the fan is measured at 5.0 feet when both inlet and outlet are ducted.

11. Furnish Certified copy of fan non- witnessed performance curves and test results for engineer's review and approval. Fan manufacturer shall not ship the fan until non-witnessed performance results are approved by Engineer.

1.06 ENVIRONMENTAL CONDITIONS

Environmental conditions are specified in Section 01800.

PART 2--PRODUCTS

2.01 ACCEPTABLE PRODUCTS

The Owner and Engineer believe the following candidate manufacturers are capable of producing equipment and/or products that will satisfy the requirements of this Section. This statement, however, shall not be construed as an endorsement of a particular manufacturer's products, nor shall it be construed that a named manufacturer's standard equipment or products will comply with the requirements of this Section. Candidate manufacturers include New York Blower, Verantis, or approved equal.

2.02 MATERIALS

A. MATERIALS OF CONSTRUCTION:

Component	Material
Housing	Fiberglass reinforced plastic
Wheel	Fiberglass reinforced plastic
Door gasket and shaft seal	Neoprene or Teflon
Hub	Aluminum encapsulated in FRP
Bolts	Type 316 stainless steel
Shaft	Type 316L stainless steel

B. FRP FABRICATION:

1. HOUSING: Fan housings shall be ultraviolet light stabilized and the resin shall achieve ASTM Class 1 rating per ASTM E84 with a fire retardance of 25 or less without the addition of additives. Housings shall be built up with laminate construction using vinyl ester Hetron 92FR, Atlac, Hetron, or Reichold resin, a C-glass or Nexus veil for corrosion resistance, and chopped strand fiberglass for structural core strength. Outer layers shall be a 100 percent less carbon impregnation content resin coat. The next layer shall be a C-glass or Nexus corrosion resistant veil followed by another resin rich coat layer and another C-glass or Nexus veil. The structural core layer shall be comprised of resin and chopped strand fiberglass. Total glass content shall be 30 to 40 percent. Wheel and housing shall have a carbon-rich resin coating on air stream contact surfaces and shall be grounded through the base to prevent static buildup. Housing shall be provided with a minimum 6 inch diameter inspection port.

2. WHEEL: Fan wheel shall be built up using laminate construction. Wheel resin shall be vinyl ester such as Dow Derakane 510A-40, AOC, Atlac, Hetron, Reichold, or equal. No Additives to be used to achieve ASTM Class 2 rating with a fire retardance of 30 or less. The first layer of the wheel laminate shall be a 100 percent resin. The next layer shall be a C-glass or Nexus corrosion resistant veil followed by another resin rich coat and another C-glass or Nexus veil. The structural core consisting of chopped strand fiberglass and resin shall be laid next, followed by a C-glass or Nexus veil, a resin rich coat, another C-glass or Nexus veil, and a final 100 percent less carbon impregnation content resin coat. Total glass

content shall be 30 to 40 percent. Wheel shall be graphite impregnated and grounded to prevent static buildup.

3. TYPE: Construction type and material thicknesses shall be in accordance with ASTM D4167.

2.03 CONSTRUCTION

A. FAN:

Fans shall be high pressure, V-belt driven, centrifugal design with backward inclined or backward curved impellers. The fan wheel shall be the overhung type with at least two pillow block bearings located away from the air stream. Fan and motor configuration shall be as indicated in Paragraph 1.02B. Bearings shall be rated for a minimum AFBMA L-10 bearing life of 50,000 hours of operation. The shaft hub and bushings shall be completely encapsulated in a reinforced plastic laminate. Shaft and wheel are to be permanently affixed as one unit. An FRP sleeve extending from the back plate of the wheel through the fan housing shall be provided for protection of the fan shaft. The rotor shall be dynamically balanced after fabrication.

The fan shall be provided with a 1-1/2-inch FRP drain with plug at the lowest point of the scroll housing. Unless shown otherwise on the drawings, plain flanged round inlets and outlets shall be provided suitable for use with flexible connections. All flanges shall be factory drilled. All fasteners shall be stainless steel. The base shall be fabricated of steel, adequately braced, and equipped with lifting eyes. An inspection port cleanout door shall be provided.

B. ACCESSORIES:

1. FLEXIBLE CONNECTIONS: Flexible connections shall be provided for fan to duct connections. Flexible connections shall be pre-fabricated flanged type unless specifically indicated to be plain end (slip-on) type on the drawings. Material shall be neoprene or Buna-N. Flanged type expansion joints shall be W-design configuration, constructed with compound curve molded corners with arch pre-molded. Corners on rectangular expansion joints shall be completely molded and free of splices. Backing rings shall be 3/8-inch thick, 2 inches wide, Type 316 stainless steel, ANSI/ASME B16.1, Class 25 diameter and drilling. Thickness shall be 1/4-inch, minimum; flanges shall be a minimum of 3/4-inch thick. Length shall be 12 inches flange-to-flange with the following additional dimensions:

a. Extension: 1 inch.
b. Compression: 2 inches.
c. Lateral Offset: 1-1/2 inches.

Flexible connections shall be Mercer Rubber Style MI-9, Holz Rubber Company, Inc.; Style 945 (flanged style) or equal.

2. MOUNTING: Fans shall be mounted on Type I bases with Type B mountings and seismic restraints as specified in Section 11021. Mountings shall be of the height-saving type. Seismic restraints shall be designed for a 4g lateral acceleration.

3. DIFFERENTIAL PRESSURE GAUGE: One differential pressure gauge shall be provided to measure the air pressure drop across the fan. The gauge shall be industrial grade with an accuracy of +/- 2 to 3 percent of full scale. The gauge shall have a stainless steel or aluminum housing. The manufacturer shall be Dwyer or equal. Mount gauge from 48 to 60 inches from ground level for easy viewing on wall or provide a stainless steel stanchion. Provide stainless steel tubing for the sensing lines and arrange sensing lines to prevent condensate build up and prevent false readings on the gauge.

4. FAN SOUND ATTENUATION PACKAGE: The system shall be provided with a fan sound attenuation package for each fan as specified herein and shown on the contract drawings.. This package shall consist of a rigid acoustical enclosure which is placed over the fan and motor assembly.

Construction of the acoustical enclosure shall be as follows:

a. MATERIAL: Fire Retardant (Class 1) Fiberglass reinforced plastic.

b. DETAILS: Sides and top of FRP corrosion resistant housing designed to have a maximum deflection of L/360 under a 250/sq ft load. Top and sides shall be 0.75” thick.

i. A thinner outer skin may be provided with the addition of FRP pultruded structural members. If this option is selected, structural design calculations shall be submitted as part of the submittal package. The design engineer shall be registered in the state of North Carolina. Design calculations shall include data showing the alternative construction will meet the below specified sound depletion requirements.

ii. Enclosure shall have a 0.5” Base flange with Thermoplastic surface. Base flange shall be a minimum 5” wide.

iii. All exterior surfaces shall be coated with a two-part epoxy paint system. Gelcoat is not acceptable. Color to be selected by the owner prior to coating. This coating system shall be part of the submittal package including color chart and performance data. Coating shall be shop-applied.

c. OPTIONS: The sound enclosure shall be provided with the following options:

i. (3) Side and (1) Top Mounted hinged access manways with Stainless fasteners and hinges. Access manways shall be provided for easy access to the fan motor. Manways shall be gasketed with acoustic material on all interior surfaces.

ii. Center Separation Flange: The sound enclosure shall be manufactured with a complete body flange on c/l with the duct outlet. This flange shall allow the enclosure to be separated and removed with out having to break any ductwork connections. The flange shall be 0.5” thick with gasket and stainless fasteners.

iii. FRP Flashing shall be provided where ductwork penetrates the sound enclosure. The flashing should have gaskets to prevent sound loss and 316 stainless hardware for assembly.

iv. The enclosure shall be fitted with an acoustical louvered vent for air intake and exhaust fan for heat dissipation as specified on contract drawings. The enclosure shall include door as shown on the contract drawing.

d. ACOUSTIC INSULATION AND PERFORMANCE: All internal surfaces shall be coated with a dense sound barrier material and 1.5” thick Acoustic insulation. Barrier and insulation shall be held in place by 316 Stainless fasteners and pultruded vinyl-ester structural members. Insulation shall have a class-1 flame spread rating and be weather-proof. Performance shall be as follows: Rating at STC 37 and NRC 0.95. The fan sound attenuation package shall be capable of reducing the sound by 25 db at a minimum.

2.04 DRIVE UNIT

The fan shall be V-belt driven by an electric motor mounted on a common base. The mounting plates shall be slotted to allow tension adjustment of the drive belts and a belt guard shall be supplied. The fan shall be provided with adjustable motor base.

The electric motors shall be Type 3 and as specified in Section 11060. Electric motors shall have low noise characteristics. Motor sound levels shall not exceed 80 dBA when measured in accordance with IEEE No. 85 "Test Procedures for Air Borne Noise Measurements on Rotating Machinery" over the specified motor speed range.

The fan shall powered and controlled by a variable frequency drive (VFD). VFD shall be provided as part of a motor control center specified in Division 16 and as shown on the plans..

2.05 CONTROLS

Fan controls are provided under Division 16 and 17. See control description in Specification Section 17900.

2.06 PRODUCT DATA

The following information shall be provided in accordance with Section 01300:

1. All operations and maintenance information specified in Section 01730.

2. Manufacturer’s Installation Certification Form 11000-A in accordance with Section 01999.

3. Manufacturer's Instruction Certification Form 11000-B in accordance with Section 01999 that instructions to operators have been completed.

2.07 STANDBY COMPONENTS

The following standby components shall be provided for each fan size:

1. One set of matched belts per fan size and horsepower requirement.
2. One shaft seal
3. One set of bearings

Standby components shall be tagged and stored as specified in paragraph 11000-2.12.

PART 3--EXECUTION

3.01 INSTALLATION

The fan shall be connected and installed as shown on the drawings and in accordance with the manufacturer's printed instructions. The installation and trial operation shall be certified on Form 11000-A specified in Section 01999.

3.02 TESTING

Each fan shall be dynamically balanced in accordance with ASTM D4167 at the specified operating speed. One of each size fan shall be factory tested in an AMCA approved laboratory for air and sound performance. Results shall be provided to Engineer.

After completion of installation, each fan shall be completely field tested in accordance with Sections 01660 and 15990 to guarantee compliance with the drawings and the requirements of this Specification.

3.03 TRAINING

A minimum of 4 hours of training shall be provided by the fan manufacturer's service representative. Training shall conform to Section 01664 and shall be certified on Form 11000-B as specified in Section 01999.

END OF SECTION

SECTION 15844

GRAVITY VENTILATORS

PART 1--GENERAL

1.01 DESCRIPTION

A. SCOPE:

This section specifies gravity ventilators for intake duty. The gravity ventilators will be mounted on flat aluminum tank covers. Gravity ventilators furnished under this section shall be designed and selected for continuous operation.

B. PERFORMANCE AND DESIGN REQUIREMENTS:

Equipment No.	Item	Throat size, inches	Intake, cfm	Static pressure drop, inches w.c. max.
IH-5011	Membrane Tank 1 Inlet Hood	16 x36	2000	0.08
IH-5021	Membrane Tank 2 Inlet Hood	16 x36	2000	0.08
IH-5031	Membrane Tank 3 Inlet Hood	16 x36	2000	0.08
IH-5041	Membrane Tank 4 Inlet Hood	16 x36	2000	0.08
IH-5051	Sludge Thickener tank Inlet Hood	18 x24	1000	0.05
IH-5091	Sludge Holding Tank Inlet Hood	16 x24	500	0.03
IH-3010-1	Biological Basin 1 Inlet Hood 1	18 x24	1000	0.05
IH-3010-2	Biological Basin 1 Inlet Hood 2	18 x24	1000	0.05
IH-3010-3	Biological Basin 1 Inlet Hood 3	18 x 24	1000	0.05
IH-3010-4	Biological Basin 1 Inlet Hood 4	18 x 24	1000	0.05
IH-3020-1	Biological Basin 2 Inlet Hood 1	18 x 24	1000	0.05
IH-3020-2	Biological Basin 2 Inlet Hood 2	18 x 24	1000	0.05
IH-3020-3	Biological Basin 2 Inlet Hood 3	18 x 24	1000	0.05
IH-3020-4	Biological Basin 2 Inlet Hood 4	18 x 24	1000	0.05

1.02 REFERENCES

1.03 SUBMITTALS

Submittals shall be provided in accordance with Section 01300 and shall include the

following:

39. A copy of this specification section, with addendum updates included, and all referenced and applicable sections, with addendum updates included, with each paragraph check-marked to indicate specification compliance or marked to indicate requested deviations from specification requirements. Check marks (✓) shall denote full compliance with a paragraph as a whole. If deviations from the specifications are indicated, and therefore requested by the Contractor, each deviation shall be underlined and denoted by a number in the margin to the right of the identified paragraph. The remaining portions of the paragraph not underlined will signify compliance on the part of the Contractor with the specifications. The submittal shall be accompanied by a detailed, written justification for each deviation. *Failure to include a copy of the marked-up specification sections, along with justification(s) for any requested deviations to the specification requirements, with the submittal shall be sufficient cause for rejection of the entire submittal with no further consideration.*

40. A copy of the control diagrams, HVAC airflow schematics, and HVAC drawings with addendum updates that apply to the equipment in this section, marked to show specific changes necessary for the equipment proposed in the submittal. If no changes are required, the drawing or drawings shall be marked “No Changes Required.” *Failure to include copies of the relevant drawings with the submittal shall be cause for rejection of the entire submittal with no further review.*

41. Manufacturer's catalog and/or other data confirming conformance to specified design, material and equipment requirements.

42. Certified results of pressure drop test data and water penetration data.

PART 2--PRODUCTS

2.01 ACCEPTABLE PRODUCTS

Gravity vents shall be Greenheck, Cook, PennBarry modified as required to provide the specified features and performance.

2.02 MATERIALS

Gravity ventilator material shall be as follows:

Component	Material
Hood	Aluminum

Base / Curb Cap	Aluminum
Airshaft / Throat	Aluminum
Bird Screens	Aluminum or Stainless Steel
Fasteners	Stainless Steel
Curbs	Welded Aluminum
Gravity Backdraft Dampers	Aluminum

2.03 CONSTRUCTION

A. VENTILATORS:

Gravity ventilators shall be factory made and shipped to the job site in preassembled sections including covers, screens and all required fasteners.

B. PREFABRICATED CURBS:

Each ventilator shall be provided with a prefabricated mounting curb as shown on the drawings. The outer shell of the curb shall be formed with an integral cant strip and mounting flange. The corners shall be mitered and welded continuously to form a one-piece leakproof shell.

C. BIRD SCREENS:

All gravity ventilators shall be provided with 1/2-inch x 1/2-inch, bird screen.

D. GRAVITY BACKDRAFT DAMPERS:

The gravity backdraft dampers shall be adjustable from 0.05 through 0.2 inches water column. The backdraft damper shall be factory set at 0.10 inches of water column and shall open and bring the outside air in to the tanks.

E. HINGED HOOD:

Gravity Ventilators shall be provided with hinged hood to allow for easy access to gravity counterbalanced backdraft dampers.

PART 3--EXECUTION

3.01 GENERAL

The gravity ventilators will be installed on flat aluminum covers for intake duty. Each ventilator and curb shall be installed as shown on the contract drawings and in accordance with the manufacturer's printed instructions and per cover manufacturer’s recommendations. Installation of all gravity ventilators must be coordinated with the aluminum tank cover manufacturer.

3.02 TESTING AND BALANCING

After completion of installation, each unit shall be completely field tested and balanced in accordance with Section 15990 to guarantee compliance with these specifications.

END OF SECTION

SECTION 15850

AIR HANDLING UNITS

PART 1—GENERAL

1.01 DESCRIPTION

A. SCOPE:

This section specifies single zone, low- or medium-pressure central station air handling units for heating, ventilating and air conditioning. This specification also specifies gas fired duct furnace.

B. EQUIPMENT LIST:

Item	Equipment No.	Type
Electrical Room Air Handling Unit 1	AHU-2161	Vertical, draw through, 100% RA , cooling unit
Electrical Room Air Handling Unit 2	AHU-2162	Vertical, draw through, 100% RA , cooling unit
Admin Building Air Handling Unit	AHU-2151	Vertical, draw through heating & cooling unit
Indirect Gas Fired Duct Furnace for AHU-2151	GDH-2151	Indirect gas fired duct furnace

C. OPERATING REQUIREMENTS:

1. AIR HANDLING UNITS: Air handling units shall be designed to meet the following operating requirements:

Equipment No.	Capacity (cfm)	External Static Pressure (in. w.c.)	Max. (bhp)	Motor (hp)	Max. Fan Speed (rpm)	Remarks
AHU-2161	8,000	1.25	8.5	10	2800	1, 2
AHU-2162	8,000	1.25	8.5	10	2800	1, 2
AHU-2151	3,000	1.5	3.1	5	3100	1, 2

Notes:
1. BHP includes drive losses.
2. The air handling unit manufacturer shall provide starter with each unit.

2. DIRECT EXPANSION COOLING COIL: Provide direct expansion refrigerant type cooling coils, matched with an air-cooled condensing unit. Coils shall be designed to meet the operating requirements:

Equipment No.	Total Cooling Capacity (BTUH)	Sensible Cooling Capacity (BTUH)	Airflow (cfm)	EAT[a] DB/WB	LAT[b] DB/WB	APD[c]
CC-2161	260,000	197,000	8,000	80/67	VTF[d]	VTF
CC-2162	260,000	197,000	8,000	80/67	VTF	VTF
CC-2151	88,000	63,700	3,000	75/63	VTF	VTF

[a]EAT – entering air temperature both as dry bulb (DB) and wet bulb (WB) temperature, °F
[b]LAT – leaving air temperature both as dry bulb (DB) and wet bulb (WB) temperature, °F
[c]APD – air pressure drop, in., water column
[d]VTF – Vendor to furnish

1.02 QUALITY ASSURANCE

A. REFERENCES:

This section contains references to the following documents. They are a part of this section as specified and modified. Where a referenced document contains references to other standards, those documents are included as references under this section as if referenced directly. In the event of conflict between the requirements of this section and those of the listed documents, the requirements of this section shall prevail.

Unless otherwise specified, references to documents shall mean the documents in effect at the time of Advertisement for Bids or Invitation to Bid (or on the effective date of the Agreement if there were no Bids). If referenced documents have been discontinued by the issuing organization, references to those documents shall mean the replacement documents issued or otherwise identified by that organization or, if there are no replacement documents, the last version of the document before it was discontinued. Where document dates are given in the following listing, references to those documents shall mean the specific document version associated with that date, regardless of whether the document has been superseded by a version with a later date, discontinued or replaced.

Reference	Title
AFBMA 9	Load Ratings and Fatigue Life for Ball Bearings
AFBMA 11	Load Ratings and Fatigue Life for Roller Bearings
AMCA	Certified Ratings Program
ARI 410	Forced-Circulation Air-Cooling and Air-Heating Coils
ARI 430	Central-Station Air Handling Units

Reference	Title
NFPA 70	National Electrical Code (NEC)
NFPA 90A	Installation of Air Conditioning and Ventilating Systems
UL 465	Central Cooling and Air Conditioners
Section 15851	Condensing Units

B. COMPATIBILITY:

Air handling units shall be of a single manufacturer to assure compatibility and consistency of installation. Air handling units shall comply with ARI 430 and UL 465 standards.

C. FACTORY TESTS:

No specific factory tests are specified.

D. WARRANTY AND PERFORMANCE AFFIDAVIT:

A 1-year, 100-percent parts and labor warranty against manufacturing defects or failure of the equipment specified in this section caused by normal wear and tear shall be provided. The warranty period shall start from the date of final acceptance of the equipment specified in this section.

1.03 SUBMITTALS

Submittals shall be provided in accordance with Section 01300 and shall include the following:

1. A copy of this specification section, with addendum updates included, and all referenced and applicable sections, with addendum updates included, with each paragraph check-marked to indicate specification compliance or marked to indicate requested deviations from specification requirements. Check marks (✓) shall denote full compliance with a paragraph as a whole. If deviations from the specifications are indicated, and therefore requested by the Contractor, each deviation shall be underlined and denoted by a number in the margin to the right of the identified paragraph. The remaining portions of the paragraph not underlined will signify compliance on the part of the Contractor with the specifications. The submittal shall be accompanied by a detailed, written justification for each deviation. *Failure to include a copy of the marked-up specification sections, along with justification(s) for any requested deviations to the specification requirements, with the submittal shall be sufficient cause for rejection of the entire submittal with no further consideration.*

2. A copy of the control diagrams, HVAC airflow schematics, and HVAC drawings with addendum updates that apply to the equipment in this section, marked to show specific changes necessary for the equipment

proposed in the submittal. If no changes are required, the drawing or drawings shall be marked "No Changes Required." *Failure to include copies of the relevant drawings with the submittal shall be cause for rejection of the entire submittal with no further review.*

3. Provide static pressure drop through each air handling unit section and calculated total fan static pressure. Provide fan performance curves for the calculated total fan static pressure and specified air flow rate (i.e., operating conditions).

4. Motor data form 11060-A as required under Section 11060.

5. Provide catalog dimensional data.

6. Provide cooling coil data.

7. Provide a visual demonstration that the unit fits in the space allocated with adequate access and maintenance clearance.

PART 2—PRODUCTS

2.01 ACCEPTABLE PRODUCTS

Air handling units shall be McQuay, Carrier or Trane modified to provide the specified features and to meet the specified operating requirements.

2.02 MATERIALS

Component	Material
Structural Base	Steel channel
Fan Housing	Galvanized 18-gauge steel
Fan Wheel	Galvanized steel
Shaft	Solid steel
Coil Casing	Galvanized 18-gauge steel
Coil Fins	Aluminum
Coils	Copper tube
Drain Pan	Stainless steel
Filter Box	Galvanized 18-gauge steel
Filter/mixing box	Galvanized 18-gauge steel
Unit Casing	Galvanized 16-gauge steel
Damper	Aluminum

Materials specified are considered the minimum acceptable for the purposes of durability, strength, and resistance to erosion and corrosion. The Contractor may propose alternative materials for the purpose of providing greater strength or to meet required stress limitations. However, alternative materials must provide at least the same qualities as those specified for the purpose.

2.03 EQUIPMENT FEATURES

FAN:

Fan shall have a non-overloading wheel, backward-curved or airfoil blades. Fans shall be double-width, double-inlet (DWDI).

Fan shall be selected for stable operation and shall be v-belt driven. Fans shall be statically and dynamically balanced as an assembly with motor. Maximum fan rpm shall be below the first critical speed.

Fan and motor assembly shall be internally isolated from the casing with neoprene gasketing and mounted on double deflection spring isolators.

B. BEARINGS:

Fan bearings shall be rubber enclosed, self-aligned grease-lubricated ball or roller bearings rated for a minimum AFBMA L 10 bearing life of 100,000 and 50,000 hours, respectively. Bearing grease points shall be extended to accessible side of unit for service.

C. MOTOR AND DRIVE UNIT:

a. The motor shall be TEFC premium energy-efficient type. Motor shall be mounted and isolated externally.

All belt-driven fans shall be furnished with adjustable pitch sheaves and adjustable motor bases suitable for a ±5-percent adjustment in operating speed. V-belt drive shall be as specified in Section 11000.

Fan motor shall be two-speed where multiple air flow capacities are listed in the equipment schedule under section 1.01.C.1.

d. COILS:

1. DX Coils: The coils shall have aluminum fins and copper tubes. Fins shall have collars drawn, belled, and bonded to tubes by mechanical expansion of the tubes. Coil casing shall be galvanized steel. Coils shall be leak-tested to 300 psig. After testing, the inside of the coils shall be dried, sealed, and shipped with a charge of dry nitrogen. Suction headers shall be constructed of copper tubing. Coils shall have equalizing vertical distributors sized according to the capacity of the coils. Coil performance shall be certified in accordance with ARI Standard 410.

e. CASING:

Unit casing shall be fabricated of double-walled galvanized steel designed for indoor installation leak-tight against 3-inch negative pressure and reinforced to prevent vibration, air leakage and water leakage. The double-wall casing interstice shall be filled with insulation having an R-value of 13 or greater. Insulation shall meet the requirements of NFPA 90A.

FILTER/MIXING BOX:

Filter Box shall have angle type filter with access doors on both sides and shall have inlet and outlet flanges with boltholes compatible with unit accessories. Filters shall be 2-inch thick disposableMERV-8. Provide differential pressure indicator for filter pressure drop.

G. THERMOSTATS:

For AHU-2161 and 2162 furnish programmable, electronic 4-stage cooling thermostat. The thermostat shall include fan “ON-AUTO” switch and system “COOL-OFF-AUTO” switch.
For AHU-2151 provide Honeywell WI-FI two stage cooling and 2 stage heating thermostat or approved equal.

2.04 INDIRECT GAS FIRED DUCT FURNACE:

Refer to the requirements of specification 15636

2.05 COATING

The air unit handling casing, coils, fins, fans, filter box and air plenums shall be protected with manufacturer’s standard coating.

2.06 CONTROLS AND POWER

Controls shall be as specified in Section 15951.

Power input will be 460 volt, 3-Phase, 60-Hertz for all equipment specified in this specification section. Units shall be supplied with single connection power feed. The motor starter and the heater controllers shall be integral with the respective unit. Separate lockable power disconnect shall be provided at motor and heater sections.

2.06 PRODUCT DATA

The following information shall be provided in accordance with Section 01300:

1. Applicable operating and maintenance information in accordance with Section 01730.

2. AFBMA bearing ratings for the fan and the motor at design conditions.

3. Dimensional drawings of air handling unit.

4. Heating coil and control panel information for all units with electrical heating elements.

5. Certification that the units have been tested and rated in accordance with the applicable AMCA standard test code and certified ratings program.

6. NEC and UL labels.

2.07 SPARE PARTS

One extra set of V-belts and one set of 2-inch filters shall be provided for each air handling unit. Spare parts shall be tagged and stored in accordance with paragraph 11000-2.12.

PART 3—EXECUTION

3.01 INSTALLATION

Air handling unit shall be installed as specified and in accordance with manufacturer's recommendations. Piping and ductwork shall be connected to coils and air handling units through flexible connections. Air handling unit shall comply with noise requirements and control as specified in Section 11015.

3.02 MANUFACTURER’S SERVICES

The Manufacturer shall furnish the services of qualified factory representative for inspection and installation for a total of 1 day at 8 hours/day (excluding travel time).

The Manufacturer shall furnish the services of qualified factory representative for start-up, testing, and instruction of operating personnel for a total of 1 day at 8 hours/day (excluding travel time) and total of one trip to the jobsite.

No additional payment shall be made for services required under this article.

3.03 TESTING

After completion of installation, each air handling unit shall be completely field-tested and balanced in accordance with Sections 01660 and 15990 to guarantee compliance with these specifications.

END OF SECTION

SECTION 15851

CONDENSING UNITS

PART 1—GENERAL

1.01 DESCRIPTION

B. SCOPE:

This section specifies air-cooled condensing units air handling unit cooling coils.

C. EQUIPMENT LIST:

Item	Equipment No.
Pump Station Electrical Room Condensing Unit 1	CU-2161
Pump Station Electrical Room Condensing Unit 2	CU-2162
Admin. Building Condensing Unit	CU-2151

C. OPERATING REQUIREMENTS:

Condensing units shall be designed to meet the following operating requirements with an outdoor ambient temperature range of 0 to 100 degrees F. The units CU-2161 and CU-2162 shall provide minimum of four stages cooling and two independent refrigerant circuits. The minimum EER shall be 11.0

Equip No.	Total Cooling Capacity (BTUH[a])	No. of Compressors	Maximum Total Compressor Power (kW)	No. of Condenser Fans	Condenser Fan Motor (hp)	Matching Indoor Unit
CU-2161	260,000	2	18.0	Vendor to furnish	Vendor to furnish	AHU-2161
CU-2162	260,000	2	18.0	Vendor to furnish	Vendor to furnish	AHU- 2162
CU-2151	88,000	1 or 2	6.5	Vendor to furnish	Vendor to furnish	AHU-2151

[a] Unit must match the capacity of cooling coil specified in 15850 (Air Handling Units) and must be compatible with the coil. Total cooling capacity is determined at 95 degrees F outdoor ambient air temperature. The refrigerant shall be R410A.

1.02 QUALITY ASSURANCE

A. REFERENCES:

This section contains references to the following documents. They are a part of this section as specified and modified. In case of a conflict between the requirements of this section and those of the listed documents, the requirements of this section shall prevail.

Reference	Title
AMCA-85	Certified Ratings Program
ARI 365-87	Condensing Units Rating
NFPA 70	National Electrical Code (NEC)
UL	Construction Standards
Federal Standard 141	Unit Cabinet Federal Standard

B. COMPATIBILITY:

Condensing units shall be of a single manufacturer and same manufacturer as air handling units to assure compatibility and consistency of installation. Condensing units shall comply with ARI 365 and UL standards.

1.03 SUBMITTALS

Submittals shall be provided in accordance with Section 01300 and shall include the following:

1. A copy of this specification section, with addendum updates included, and all referenced and applicable sections, with addendum updates included, with each paragraph check-marked to indicate specification compliance or marked to indicate requested deviations from specification requirements. Check marks (✓) shall denote full compliance with a paragraph as a whole. If deviations from the specifications are indicated, and therefore requested by the Contractor, each deviation shall be underlined and denoted by a number in the margin to the right of the identified paragraph. The remaining portions of the paragraph not underlined will signify compliance on the part of the Contractor with the specifications. The submittal shall be accompanied by a detailed, written justification for each deviation. *Failure to include a copy of the marked-up specification sections, along with justification(s) for any requested deviations to the specification requirements, with the submittal shall be sufficient cause for rejection of the entire submittal with no further consideration.*

2. Fan performance curves for the specified operating conditions.

3. Cooling coil capacity at rated conditions.

4. Catalog dimensional data.

PART 2—PRODUCTS

2.01 ACCEPTABLE PRODUCTS

Condensing units shall be Johnson Controls, McQuay, Carrier or Trane, modified to provide the specified features and to meet the specified operating requirements. The condensing unit shall be of the same manufacturer as air handling unit.

2.02 EQUIPMENT FEATURES

A. GENERAL:

Outdoor-mounted, air-cooled condensing unit suitable for on-the-ground or rooftop installation. Unit shall consist of semi-hermetic reciprocating or scroll type compressors, an air-cooled coil, propeller-type condenser fans, and a control box. Unit shall discharge condenser air upward as shown on contract drawings.

Factory-assembled, single-piece, air-cooled condensing unit. Contained within the unit enclosure shall be all factory wiring, piping, controls, compressors, holding charge and special features required prior to field start-up.

B. UNIT CABINET:

Unit cabinet shall be constructed of galvanized steel, bonderized and coated with a prepainted, baked enamel finish. Unit access panels shall be hinged for control box service access. Lifting holes shall be provided to facilitate rigging.

C. FANS:

Condenser fans shall be direct-driven propeller type, discharging air vertically upward. Condenser fan motors shall be Type 2, 3-phase type with Class B insulation and permanently lubricated bearings. Shafts shall have inherent corrosion resistance. Fan blades shall be statically and dynamically balanced. Condenser fan openings shall be equipped with PVC-coated steel wire safety guards.

D. COMPRESSORS:

Compressors shall be a product of the unit Manufacturer. Compressors shall be serviceable, reciprocating, semi-hermetic or scroll type. Compressors shall be equipped with an automatically reversible oil pump, operating oil charge, suction and discharge shutoff valves, and an insert-type, factory-installed crankcase heater to control oil dilution. Compressor shall be mounted on spring vibration isolators with an isolation efficiency of no less than 95 percent. Compressor speed shall not exceed 1,750 rpm. Lead compressor shall unload using pressure-operating suction cutoff unloading (electrical solenoid unloading shall be available as an accessory). Independent refrigerant circuit shall be provided for each compressor.

E. CONDENSER COIL:

Condenser coil shall be air-cooled, circuited for integral subcooler. Coil shall be constructed of aluminum fins mechanically bonded to internally grooved, seamless copper tubes, which are then cleaned, dehydrated, and sealed. Coil shall be protected by a sheet metal casing to eliminate the need for wind baffles for low ambient temperature operation. Coil shall be protected to avoid damage due to the elements and vandalism. Aluminum fins and coil shall be coated with Blygold coating with 1.5- to 2.0-mils dry thickness

F. REFRIGERATION COMPONENTS:

Refrigeration circuit components shall include hot gas mufflers, hot gas bypass stub tubes, high-side pressure relief devices, liquid line shut-off valves, suction and discharge shut-off valves, holding charge and compressor oil.

G. CONTROLS AND SAFETIES:

Minimum control functions shall include:

1. Power and control terminal blocks.
2. Five-minute time delay protection to prevent compressor short-cycling.
3. Lockout on auto-reset safety until reset from thermostat.
4. Capacity control on the lead compressor shall be by suction cutoff unloaders in response to compressor suction pressure. Electric solenoid unloading shall be available as an accessory.
5. Head pressure control to 50 degrees F by fan cycling. One condenser fan shall be cycled by ambient temperature to maintain proper head pressure.

Minimum safety devices shall include:

1. Compressor oil pressure switches.
2. High-discharge pressure cutout.
3. Compressor over-temperature cutout.
4. Low-suction pressure cutout.
5. Condenser fan motors to be protected against overload or single-phase condition by internal overloads.
6. Electrical overload protection through the use of definite-purpose contactors and calibrated, ambient-compensated, magnetic trip circuit breakers. Circuit breakers shall open all three phases in the event of an overload in any one of the phases or a single-phase condition.

H. ELECTRICAL REQUIREMENTS:

Nominal unit electrical characteristics shall be 460 V, 3-phase, 60 Hz. Unit electrical power shall be single-point connection. Unit control circuit shall contain a 24V transformer for unit control, with capacity to operate an indoor fan interlock.

I. SPECIAL FEATURES:

1. Solid State Head Pressure Control: Control shall regulate fan motor speed in response to the saturated condensing temperature of the unit. The control shall be capable of maintaining a condensing temperature of 100 degrees F, ±10 degrees F with outdoor temperatures at -20 degrees F.

2. Winter Start Package: Winter start control to prevent nuisance trip-outs at low ambient temperatures.

J. REFRIGERANT PIPING:

The refrigerant tubing and accessories shall be sized by the condensing unit manufacturer. The refrigerant tubing shall be copper tubing. The refrigerant tubing shall be furnished by the condensing unit Manufacturer. Two independent refrigerant circuits shall be provided for condensing units CU-2161 and CU-2161

2.03 CONTROLS

Controls shall be as specified in Section 15951.

2.04 PRODUCT DATA

The following information shall be provided in accordance with Section 01300:

1. Applicable operating and maintenance information in accordance with Section 01730
2. Dimensional drawings of condensing unit
3. Cooling performance data
4. Certification that the units have been tested and rated in accordance with the ARI and UL standard test code and certified ratings program

PART 3—EXECUTION

3.01 INSTALLATION

Condensing unit shall be installed as specified and in accordance with Manufacturer's recommendations.

3.02 TESTING

After completion of installation, each air handling unit shall be completely field-tested and balanced in accordance with Sections 01660 and 15990 to guarantee compliance with these specifications.

3.03 WARRANTY

The Manufacturer shall warrant complete condensing units against defects in materials and workmanship for a full period of 5 years (parts and labor) under normal operation. The compressors shall be warranted for a 10-year period (parts and labor). This warranty shall be delivered in writing to the owner.

END OF SECTION

SECTION 15852

AIR PURIFICATION UNIT

PART 1—GENERAL

1.01 DESCRIPTION

A. SCOPE:

This section specifies an air purification unit for removal of organic and inorganic contaminants from outside and re-circulated air for the electrical room. The unit shall be vertical, complete modular chemical scrubber including chemical media, pre- and final filter and blower. The inlet air, recirculated and discharge air orientation shall be as shown on the drawing.

B. EQUIPMENT LIST:

Item	Equipment No.
Electrical Room Air Purification Unit	APU-2163

C. OPERATING REQUIREMENTS:

Item	Parameter
Blower (cfm)	500
Outside Air (cfm)	250
Recirculation Air (cfm)	250
External Static Pressure (in. w.c.)	0.2
Minimum Blower Motor, (hp)	1.0
Electrical, Blower, V/Ph/Hz	480/3/60

1.02 QUALITY ASSURANCE

A. REFERENCES:

This section contains references to the following document. It is a part of this section as specified and modified. In case of a conflict between the requirements of this section and those of the listed document, the requirements of this section shall prevail.

Unless otherwise specified, references to documents shall mean the documents in effect at the time of Advertisement for Bids or Invitation to Bid (or on the effective date of the Agreement if there were no Bids). If referenced documents have been discontinued by the issuing organization, references to those documents shall mean the replacement documents issued or otherwise identified by that organization or, if there are no replacement documents, the last version of the document before it was discontinued. Where document dates are given in

the following listing, references to those documents shall mean the specific document version associated with that date, whether or not the document has been superseded by a version with a later date, discontinued or replaced.

Reference	Title
AMCA Standard 210	Laboratory Methods of Testing Fans for Rating
ASHRAE Standard 52	American Society of Heating, Refrigeration, Air-conditioning Engineers Standard
ISO 9000 and 9001	ISO Certification and Quality Standards
UL	Underwriters Laboratory

B. FACTORY TESTS:

No specific factory tests are specified.

C. WARRANTY AND PERFORMANCE AFFIDAVIT:

A 1-year, 100-percenrt parts and labor warranty against manufacturing defects or failure of the equipment specified in this section caused by normal wear and tear shall be provided. The warranty period shall start from the date of final acceptance of the equipment specified in this section.

No performance affidavit above and beyond the inclusion of the checkmarked section(s) as specified in the Submittals paragraph of this section is specified.

1.03 SUBMITTALS

Submittals shall comply with the requirements of Section 01300 and shall include the following information:

1. A copy of this specification section, with addendum updates included, and all referenced and applicable sections, with addendum updates included, with each paragraph check-marked to indicate specification compliance or marked to indicate requested deviations from specification requirements. Check marks (✓) shall denote full compliance with a paragraph as a whole. If deviations from the specifications are indicated, and therefore requested by the Contractor, each deviation shall be underlined and denoted by a number in the margin to the right of the identified paragraph. The remaining portions of the paragraph not underlined will signify compliance on the part of the Contractor with the specifications. The submittal shall be accompanied by a detailed, written justification for each deviation. *Failure to include a copy of the marked-up specification sections, along with justification(s) for any requested deviations to the specification requirements, with the submittal shall be sufficient cause for rejection of the entire submittal with no further consideration.*

2. A copy of the control diagrams, HVAC airflow schematics, and HVAC drawings with addendum updates that apply to the equipment in this section, marked to show specific changes necessary for the equipment proposed in the submittal. If no changes are required, the drawing or drawings shall be marked "No Changes Required." *Failure to include copies of the relevant drawings with the submittal shall be cause for rejection of the entire submittal with no further review.*

3. Fan performance curves for the specified operation conditions.

4. Motor data Form 11060-A as required in Section 11060. Refer to electrical drawings to determine area classification requirement.

5. Unit catalog cuts and materials of construction data.

6. Room air pressurization and flow monitoring panel data.

7. Chemical media information.

8. Filters data and pressure drop information.

1.04 ENVIRONMENTAL CONDITIONS

The environmental conditions shall be as specified in Section 01800.

PART 2—PRODUCTS

2.01 ACCEPTABLE PRODUCTS

Packaged unit shall be Purafil PPU Model 250V or equal, modified to provide the specified features and to meet specified operating conditions.

2.02 MATERIALS

Component	Material
Fan Wheel	GRP (glass reinforced polyamide)
Fan Housing	GRP (glass reinforced polyamide)
Scrubber Housing	14-gauge cold rolled steel

2.03 EQUIPMENT

A. SCRUBBER HOUSING CONSTRUCTION:

The scrubber housing shall be constructed of 14-gauge cold-rolled steel, seam welded. The unit shall be provided with gasketed front access door(s) for servicing all components. Latches

shall have a positive locking action. All hinges and draw latches shall be constructed of stainless steel. The scrubber shall be designed for indoor installation.

Welding procedure qualifications and welder performance qualifications shall conform to the requirements of Section IX of the ASME Code, latest edition.

Housing shall be painted inside and out (before assembly) using the following three-step procedure:

1. Steam / pressure wash with a paint prep (Oakite™ 187SC, or approved equal).

2. Epoxy priming (CheckRust™ Insl-Tile® Activated Epoxy Coating, EP-5000 Series, or approved equal).

3. Polyurethane final coat of no less than 1.5 mils (CheckRust Insl-Thane® Heavy Duty Polyurethane Enamel, GU-2500 Series or approved equal). Color shall be gray.

The scrubber housing shall be provided with base support.

The scrubber housing shall be designed to facilitate standard fan and motor maintenance.

Door seals shall be attached by mechanical means and designed for replacement. Seals shall be glued in conjunction with mechanical attachment.

The scrubber shall be arranged for horizontal or vertical airflow and shall deliver the designed combined airflow (pressurization plus recirculation). There shall be a manually controlled damper located at the intake for optimization of pressurization air. Inlet, return, and discharge openings shall be as shown on contract drawings. The return and discharge openings shall include grilles with four-way deflection louvers.

Stainless steel nameplate shall be provided permanently attached to the unit. Nameplate shall be engraved with the scrubber type, order number and serial number.

Provide combination motor starter with power disconnect. Install control circuits per accepted submittal.

B. SCRUBBER CHEMICAL MEDIA SECTIONS:

The housing shall contain two chemical media sections, designed to accommodate 12.0-inch modular media containment devices, utilizing filter tracks.

Modular media containment device (module) shall have a nominal size of 24.0 inches wide by 12.0 inches high by 12.0 inches deep in direction of airflow with a medium bed depth of 3.0 inches. Device shall be completely recyclable and/or disposable. Device shall be constructed of 0.125-inch-thick, black, high impact polystyrene.

Module shall be factory-filled with selected chemical media.

Pressure drop through each chemical media section shall not exceed 1.30 iwg. Maximum airflow through chemical media section shall be 250 ft/min.

The residence time through the chemical media section shall not be less than 0.24 second total – 0.12 second per media bed in direction of airflow. Residence time calculations shall only include media in direct path of air.

Module shall be UL-rated Class II. Manufacturer shall provide documentation.

C. PARTICULATE FILTERS:

Prefilters shall be 20- to 25-percent efficient, disposable filters. Efficiency shall be rated and tested to ASHRAE 52-76. The clean filter resistance shall not exceed 0.20 iwg (50 Pa) based on a face velocity of 100 ft/min. Filters shall be 1 inch deep.

Final filters shall be 85- to 90-percent efficient pleated disposable filters. Efficiency shall be rated and tested to ASHRAE 52-76. The clean filter resistance shall not exceed 0.30 iwg (75 Pa) based on a face velocity of 100 ft/min.

D. CHEMICAL MEDIA:

The chemical media shall be composed of carbon, alumina, and other binders (Purafil®, Puracarb® or approved equal) specifically designed for removal of hydrogen sulfide. The media shall be nonflammable and nontoxic.

E. BLOWER:

The blower shall be located between the second and third stages of air cleaning. It shall have a backward curved, centrifugal, GRP (glass-reinforced polyamide) wheel and be direct driven by a motor. Blower motor shall be 1 Hp, 480 volts, 3-phase, 60 Hz. The blower system shall provide 0.5 iwg external static pressure at the design airflow. The blower shall be isolated from housing for quiet operation. The blower motor shall be TEFC.

F. ROOM AIR PRESSRIZATION AND FLOW MONITORING PANEL:

The manufacturer shall provide room air pressurization and flow monitoring panel. Panel shall indicate air flow in cfm and room pressure in inches of W.C and pressure drop across pre-filter and final filter.

2.04 SPARE PARTS

One set of spare prefilters and final filters shall be provided.

2.05 PRODUCT DATA

The following information shall be provided in accordance with Section 01300:

1. Applicable operating and maintenance data in accordance with Section 01730.

PART 3—EXECUTION

3.01 GENERAL

Each unit shall be installed as specified and in accordance with Manufacturer's recommendations.

3.02 FIELD TESTING

Each unit shall be completely field tested to guarantee compliance with the project manual.

END OF SECTION

SECTION 15859

IN-LINE CENTRIFUGAL FANS

PART 1—GENERAL

1.01 DESCRIPTION

A. SCOPE:

This section specifies duct-mounted, in-line fans complete with fans, motors and accessories required for ventilation systems.

B. EQUIPMENT LIST:

Item	Equipment No.
Membrane Gallery Pump Room Supply Fan	SF-2143
Membrane Gallery Pump Room Exhaust Fan	EF-2143
Laboratory Supply Fan	SF-2154

C. OPERATING REQUIREMENTS:

Fan motors shall be non-overloading on all points of the operating curve. Fans shall be designed for continuous duty service and to comply with the following:

Equipment No.	Capacity (cfm)	Static Pressure (in. w.c.)	Maximum Fan Speed (rpm)	Max bhp/ Motor (hp)	Drive Type	Operating Voltage/ Phase	Remarks
SF-2143	500	0.25	1520	0.2/0.33	Belt	120/1	
EF-2143	500	0.25	1520	0.2/0.33	Belt	120/1	
SF-2154	600/300	0.5/0.12	1850	0.33/0.5	Belt	480/3	1

Notes:

1. Fan high and low flows will be controlled by VFD. VFD will be specified under division 16.

D. SOUND AND VIBRATION:

Fans specified in this section shall operate at noise levels below 20 sones, as defined by AMCA Standard 300, and at tip speeds below 5,500 ft/min.

1.02 QUALITY ASSURANCE

A. REFERENCES:

This section contains references to the following documents. They are a part of this section as specified and modified. Where a referenced document contains references to other standards, those documents are included as references under this section as if referenced directly. In the event of conflict between the requirements of this section and those of the listed documents, the requirements of this section shall prevail.

Unless otherwise specified, references to documents shall mean the documents in effect at the time of Advertisement for Bids or Invitation to Bid (or on the effective date of the Agreement if there were no Bids). If referenced documents have been discontinued by the issuing organization, references to those documents shall mean the replacement documents issued or otherwise identified by that organization or, if there are no replacement documents, the last version of the document before it was discontinued. Where document dates are given in the following listing, references to those documents shall mean the specific document version associated with that date, regardless of whether the document has been superseded by a version with a later date, discontinued or replaced.

Reference	Title
AMCA Standard 210	Laboratory Methods of Testing Fans for Rating
AMCA Standard 300	Test Code for Sound Rating

B. CERTIFICATION:

Fans shall bear the AMCA rating seal.

1.03 SUBMITTALS

The following information shall be provided in accordance with the requirements of Section 01300:

1. A copy of this specification section, with addendum updates included, and all referenced and applicable sections, with addendum updates included, with each paragraph check-marked to indicate specification compliance or marked to indicate requested deviations from specification requirements. Check marks (✓) shall denote full compliance with a paragraph as a whole. If deviations from the specifications are indicated, and therefore requested by the Contractor, each deviation shall be underlined and denoted by a number in the margin to the right of the identified paragraph, referenced to a detailed written explanation of the reasons for requesting the deviation. The Engineer shall be the final authority for determining acceptability of

requested deviations. The remaining portions of the paragraph not underlined will signify compliance on the part of the Contractor with the specifications. Failure to include a copy of the marked-up specification sections, along with justification(s) for any requested deviations to the specification requirements, with the submittal shall be sufficient cause for rejection of the entire submittal with no further consideration.

2. A copy of the contract document control diagrams and process and instrumentation diagrams relating to the submitted equipment, with addendum updates that apply to the equipment in this section, marked to show specific changes necessary for the equipment proposed in the submittal. If no changes are required, the drawing or drawings shall be marked "No Changes Required". Failure to include copies of the relevant drawings with the submittal shall be cause for rejection of the entire submittal with no further review.

3. Fan performance curves for the specified operating conditions.

4. Motor data form 11060-A as required in Section 11060.

1.04 ENVIRONMENTAL CONDITIONS

Environmental conditions are specified in Section 018000.

PART 2—PRODUCTS

2.01 ACCEPTABLE PRODUCTS

Fans shall be straight-through centrifugal, in-line fans manufactured by Cook, Greenheck or PennBarry, modified as necessary to provide the specified features and to meet the specified operating conditions.

2.02 MATERIALS

Component	Material
Fan Wheel	Aluminum
Fan Wheel Shaft	Stainless steel
Fan Housing	Aluminum
Fasteners	Stainless steel

Materials specified are considered the minimum acceptable for the purposes of durability, strength, and resistance to erosion and corrosion. The Contractor may propose alternative materials for the purpose of providing greater strength or to meet required stress limitations. However, alternative materials must provide at least the same qualities as those specified for the purpose.

2.03 EQUIPMENT

A. FAN:

The fan housing shall be square or rectangular in design and shall be provided with duct mounting collars at the inlet and outlet for connection to rectangular ductwork.

Fan housing shall be designed to provide access to the motor and fan unit through a gasketed access door. The fan inlet shall be provided with a venturi throat that is overlapped by the fan wheel.

The fan wheel shall have backward inclined blades as provided standard by the manufacturer for the specified conditions. The wheel shall be statically and dynamically balanced at the factory. The fan wheel shaft, on belt-driven fans, shall be mounted in a heavy duty, permanently sealed, permanently lubricated, ball bearing pillow block. Bearings shall be rated for a minimum AFBMA L-10 bearing life of 100,000 hours.

The entire drive assembly, as a unit, shall be removable without removing the fan assembly from the ductwork. Belt-driven fans shall be furnished with adjustable pitch sheaves and adjustable motor bases suitable for a ±5-percent adjustment in operating speed. The V-belt drive shall be as specified in paragraph 11000-2.03.

B. MOTOR:

Unless otherwise specified, the motor shall operate at 1,750 rpm and shall be Type 2 as specified in Section 11060. Motors 1 hp and larger shall be the high efficiency type. Motors 1/12 hp and smaller shall be the fan manufacturer's standard motor. Motors shall be mounted on vibration isolators and shall be sealed from the exhaust air stream. A motor and belt cover shall be provided on all belt-driven fans. A unit-mounted disconnect switch shall be provided on each fan housing. A flexible conduit, connecting the disconnect to the fan motor, shall be provided. The conduit shall be of sufficient length to permit access to the motor and drive assembly without disconnecting the wiring.

Fan motor shall be two-speed where multiple air flow capacities are listed in the equipment schedule under section 1.01.C.

C. ACCESSORIES:

Each fan shall be provided with vibration isolators for fan mounting as specified. Fan inlet guards shall be provided on fans with nonducted inlets. Automatic backdraft damper shall be provided for each fan. Direct drive fans shall be provided with wall-mounted speed controller.

2.04 SPARE PARTS

One set of V-belts shall be provided for each belt-driven fan.

2.05 PRODUCT DATA

The following information shall be provided in accordance with Section 01300:

1. Motor data as specified in paragraph 11060-2.05.

2. Certification that the units have been tested and rated in accordance with the applicable AMCA Standard Test Code and Certified Ratings Program.

3. Applicable operating and maintenance data in accordance with Section 01730.

PART 3—EXECUTION

3.01 INSTALLATION

Each fan shall be installed as specified and in accordance with manufacturer's recommendations. Flexible duct connections shall be provided where the fan connects to ductwork.

3.02 FIELD TESTING

Each fan shall be completely field tested in accordance with Section 15990 to guarantee compliance with the project manual.

END OF SECTION

SECTION 15872

CEILING EXHAUST FANS

PART 1—GENERAL

1.01 DESCRIPTION

A. SCOPE:

This section specifies exhaust fans for installation above ceilings.

B. TYPE:

Fans specified under this section are direct-driven, double-inlet, scroll-type centrifugal cabinet fans.

C. EQUIPMENT LIST:

Item	Equipment No.
Mens Rest Room Exhaust Fan	EF-2153
Womens Rest Room Exhaust Fan	EF-2152

1.02 QUALITY ASSURANCE

A. PERFORMANCE AND DESIGN REQUIREMENTS:

Fans shall be designed to comply with the following:

Equipment No.	Capacity (cfm)	Static Pressure (in. w.c.)	Fan Speed (rpm)	Min. Motor (hp or W)	Operating Voltage/Phase
EF-2152	200	0.50	1050	81W	120/1
EF-2153	200	0.50	1050	81W	120/1

1.03 ENVIRONMENTAL CONDITIONS

The ceiling exhaust fans will be located within buildings where temperatures are expected to range from 65 to 90 degrees F and the relative humidity from 10 to 90 percent.

1.04 SUBMITTALS

The following shall be provided in accordance with the requirements of Section 01300.

1. A copy of this specification section, with addendum updates included, and all referenced and applicable sections, with addendum updates included, with each paragraph check-marked to indicate specification compliance or marked to indicate requested deviations from specification requirements. Check marks (✓) shall denote full compliance with a paragraph as a whole. If deviations from the specifications are indicated, and therefore requested by the Contractor, each deviation shall be underlined and denoted by a number in the margin to the right of the identified paragraph, referenced to a detailed written explanation of the reasons for requesting the deviation. The Engineer shall be the final authority for determining acceptability of requested deviations. The remaining portions of the paragraph not underlined will signify compliance on the part of the Contractor with the specifications. *Failure to include a copy of the marked-up specification sections, along with justification(s) for any requested deviations to the specification requirements, with the submittal shall be sufficient cause for rejection of the entire submittal with no further consideration*.

2. Fan performance curves for the specified operating conditions

3. Fan catalog cuts

PART 2—PRODUCTS

2.01 MATERIALS

Component	Material
Cabinet	Steel
Scroll	Steel
Grill	Plastic
Fan Wheel	Aluminum
Backdraft Damper	Plastic

2.02 EQUIPMENT

The ceiling exhaust fans shall be cabinet fans suitable for installation above the ceilings of the various rooms as shown. The cabinet shall be constructed with adequate reinforcing for hanging above the ceiling and for support of the fan and motor inside. The bottom of the cabinet shall be readily removable for access to the fan, and it shall have a slot type grille for air inlet. The cabinet shall also have provision for fan discharge and duct connection on one side. The fan shall be a scroll type centrifugal fan. Fan wheel shall be of double-inlet design with forward curved blades. The motor shall be directly connected to the fan wheel shaft. Both the fan and the motor shall be mounted on a common steel base which, in turn, is mounted in the cabinet through spring type vibration isolators. A compression seal shall be provided between the fan discharge and the cabinet. A backdraft damper shall be provided at the fan discharge. The discharge from the fan shall be exhausted to outside atmosphere through ductwork as shown. The cabinet fan and all connecting appurtenances shall be protected by a baked enamel coating over phosphatized steel.

PART 3—EXECUTION

3.01 INSTALLATION

Each fan shall be installed as specified and in accordance with Manufacturer's recommendations.

3.02 FIELD TESTING

Each fan shall be completely field tested in accordance with Section 15990 to guarantee compliance with the project manual.

END OF SECTION

SECTION 15875

AXIAL FIBERGLASS REINFORCED PLASTIC (FRP) FANS

PART 1 – GENERAL

1.01 DESCRIPTION

A. SCOPE:

This section specifies axial duct fiberglass reinforced plastic (FRP) fans for corrosive service.

B. EQUIPMENT LIST:

Description	Equipment No.
Membrane area chemical/pump room exhaust fan	EF-2141
Membrane area citric acid room exhaust fan	EF-2142

1.02 PERFORMANCE REQUIREMENTS

A. GENERAL:

Fans specified in this section shall be designed and selected for continuous operation with air containing corrosive and flammable vapors and gases generated from the treatment and conveyance of municipal wastewater and stabilization and dewatering of solids from municipal wastewater treatment processes. Vapors and gases may be expected to include methane, hydrogen sulfide, chlorine gas, sulfur dioxide, gasoline vapors, ammonia, and water saturated air. The air stream may also be expected to contain droplets of dilute sulfuric acid. Air stream temperatures are expected to vary between 50 and 95°F.

B. OPERATING REQUIREMENTS:

The fans shall be selected to achieve the indicated operating capacity at no greater than 80 percent of maximum recommended rpm. Fans shall be non-overloading at all points on their curve. Capacity shall be determined in accordance with AMCA Standard 210.

Equipment No.	Capacity, cfm	Static pressure, inches w.c.	Fan speed, rpm	Fan size, inches	Max. BHP/ Motor hp	Voltage / phase	Remarks
EF-2141	7,000	0.375	2,100	24	1.35/2	480/3	1

Equipment No.	Capacity, cfm	Static pressure, inches w.c.	Fan speed, rpm	Fan size, inches	Max. BHP/ Motor hp	Voltage / phase	Remarks
EF-2142	550	0.375	2,000	12	0.25/0.33	120/1	1

Notes: 1. The motor shall be TEFC construction and non -overloading type at any operating point on the fan curve.

C. BALANCE AND VIBRATION:

Fans specified in this section shall be balanced at the factory to operate without vibration throughout the full operating range specified.

1.03 QUALITY ASSURANCE

A. REFERENCES:

This section contains references to the following documents. They are a part of this section as specified and modified. In case of conflict between the requirements of this section and those of the listed documents, the requirements of this section shall prevail.

Unless otherwise specified, references to documents shall mean the documents in effect at the time of Advertisement for Bids or Invitation to Bid (or on the effective date of the Agreement if there were no Bids). If referenced documents have been discontinued by the issuing organization, references to those documents shall mean the replacement documents issued or otherwise identified by that organization or, if there are no replacement documents, the last version of the document before it was discontinued. Where document dates are given in the following listing, references to those documents shall mean the specific document version associated with that date, whether or not the document has been superseded by a version with a later date, discontinued or replaced.

Reference	Title
AMCA 210	Air Movement and Control Association Test Code and Certified Ratings Program
AMCA Standard 211	Certified Rating Program for Air Moving Devices
AMCA Standard 300	Test Code for Sound Rating
AMCA Standard 301	Methods for Calculating Fan Sound Ratings from Laboratory Test Data
ASTM D4167	Fiber-Reinforced Plastic Fans and Blowers

FRP fabrication shall be in accordance with the National Bureau of Standard Voluntary Product Standards PS-15-69.

B. CERTIFICATION:

Fan shall bear the AMCA rating seal.

C. FACTORY TESTS:

No specific factory tests are specified.

D. WARRANTY AND PERFORMANCE AFFIDAVIT:

A one year 100% parts and labor warranty against manufacturing defects or failure of the equipment specified in this section caused by normal wear and tear shall be provided. The warranty period shall start from the date of final acceptance of the equipment specified in this section.

1.04 SUBMITTALS

The following information shall be provided in accordance with the requirements of section 01300:

1. A copy of this specification section, with addendum updates included, and all referenced and applicable sections, with addendum updates included, with each paragraph check-marked to indicate specification compliance or marked to indicate requested deviations from specification requirements. Check marks (✓) shall denote full compliance with a paragraph as a whole. If deviations from the specifications are indicated, and therefore requested by the Contractor, each deviation shall be underlined and denoted by a number in the margin to the right of the identified paragraph. The remaining portions of the paragraph not underlined will signify compliance on the part of the Contractor with the specifications. The submittal shall be accompanied by a detailed, written justification for each deviation. ***Failure to include a copy of the marked-up specification sections, along with justification(s) for any requested deviations to the specification requirements, with the submittal shall be sufficient cause for rejection of the entire submittal with no further consideration.***

2. A copy of the control diagrams and HVAC drawings with addendum updates that apply to the equipment in this section, marked to show specific changes necessary for the equipment.

3. Manufacturer's catalog and/or other data confirming conformance to specified design, material and equipment requirements.

4. Predicted performance data and/or curves as applicable developed for the specific application, confirming conformance to specified design and operating requirements and characteristics.

5. Motor data form 11060-A as required in section 11060.

6. AMCA Certification.

1.05 ENVIRONMENTAL CONDITIONS

Fans are located outdoors at a wastewater sludge storage tanks. Environmental conditions are specified in Section 01800.

PART 2 – PRODUCTS

2.01 MANUFACTURERS

The Owner and Engineer believe the following candidate manufacturers are capable of producing equipment and/or products that will satisfy the requirements of the Section. This statement, however, shall not be construed as an endorsement of a particular manufacturer's products, nor shall it be construed that a named manufacture's standard equipment or products will comply with the requirement of this Section. Candidate manufacturers include Hartzell (Series 34 or 35) or equal.

2.02 MATERIALS

A. MATERIALS OF CONSTRUCTION:

Component	Material
Housing	Fiberglass reinforced plastic
Propeller	Fiberglass reinforced plastic
Shaft seal	Neoprene or Teflon
Hub	Type 304 stainless steel encapsulated in FRP
Bolts	Type 304 stainless steel
Shaft	Type 304 stainless steel

B. FRP FABRICATION:

1. TYPE: Construction type and material thicknesses shall be in accordance with ASTM D4167.

2.03 CONSTRUCTION

A. FAN:

Fans shall be V-belt driven, axial duct type. Fan configurations shall be as shown on Drawings. The stainless steel shaft hub and bushings shall be completely encapsulated in a reinforced plastic laminate. The belt, bearings, sheaves shall be enclosed and protected from air stream. The rotor shall be statically and dynamically balanced after fabrication. All fasteners shall be stainless steel.

B. MOTOR:

Motor shall be type 2, TEFC type.

C. BEARINGS AND DRIVE ASSEMBLY:

The fan shall be provided with adjustable pitch sheaves and adjustable motor base suitable for a plus or minus 10 percent adjustment in operating speed.

Bearings shall be self-aligning, grease lubricated and prelubed, antifriction bearings of the pillow block type, complete with grease fittings. All bearings shall have an L-10 rating life of 50,000 hours. Lubrication lines shall be extended to the exterior of the fan housing.

D. ACCESSORIES:

Each fan shall be provided with following accessories:

1. Companion flanges
2. FRP motor cover
3. Belt guard
4. Epoxy coated steel mounting feet bolted to the inlet and outlet flanges for ceiling mounting as shown on the drawings
5. Spring type vibration isolators

2.04 STANDBY COMPONENTS

The following standby components shall be provided for each fan size:

1-set V-belts

2.05 PRODUCT DATA

The following information shall be provided in accordance with Section 01300:

1. Applicable operation and maintenance data in accordance with Section 01730.

2. Motor data as specified in paragraph 11060-2.05.

PART 3 – EXECUTION

3.01 INSTALLATION

Each fan shall be installed as specified and in accordance with manufacturer's recommendations.

3.02 FIELD TESTING

After completion of installation, each fan shall be completely field-tested and balanced in accordance with Sections 01660 and 15990 to guarantee compliance with these specifications.

END OF SECTION

SECTION 15876

FUME HOOD EXHAUST FANS

PART 1--GENERAL

1.01 DESCRIPTION

A. SCOPE:

This section specifies fume hood exhaust fans for exhausting corrosive fumes from laboratory hoods.

B. EQUIPMENT LIST:

Item	Equipment No.
Laboratory Fume Hood Exhaust Fan	EF-2154

C. OPERATING REQUIREMENTS:

The fan motor shall be nonoverloading on all parts of the operating curve. Fans shall be designed for continuous duty service with air containing corrosive and flammable vapors and gases from laboratory fume hoods and designed to comply with the following:

Equipment No.	Capacity, cfm	Static pressure, in., w.c.	Wheel diameter-inch	Wheel type	Fan speed, rpm, max	Minimum motor hp	Operating voltage and phase	Remarks
EF-2154	720/360	1.25/0.3125	Vendor to furnish	Backward inclined	2,500	1	480/3	1, 2, 3

Notes:
1 The fan high and low flows will be controlled by VFD. VFD will be specified under Division 16.
2 The fan construction shall be spark proof and meet AMCA spark B construction.
3 Motor shall be nonoverloading type.

D. BALANCE AND VIBRATION:

Fans specified in this section shall be statically and dynamically balanced at the factory to operate without vibration throughout the full operating range specified.

1.02 QUALITY ASSURANCE

A. REFERENCES:

This section contains references to the following documents. They are a part of this section as specified and modified. Where a referenced document contains references to other standards, those documents are included as references under this section as if referenced directly. In the

event of conflict between the requirements of this section and those of the listed documents, the requirements of this section shall prevail.

Unless otherwise specified, references to documents shall mean the documents in effect at the time of Advertisement for Bids or Invitation to Bid (or on the effective date of the Agreement if there were no Bids). If referenced documents have been discontinued by the issuing organization, references to those documents shall mean the replacement documents issued or otherwise identified by that organization or, if there are no replacement documents, the last version of the document before it was discontinued. Where document dates are given in the following listing, references to those documents shall mean the specific document version associated with that date, regardless of whether the document has been superseded by a version with a later date, discontinued or replaced.

Reference	Title
AMCA Publication 99	Standards Handbook
ANSI/AMCA Standard 210-99	Laboratory Methods of Testing Fans for Aerodynamic Performance Rating
AMCA Publication 211-05	Certified Ratings Program - Product Rating Manual for Fan Air Performance
AMCA Standard 300-96	Reverberant Room Method for Sound Testing of Fans
AMCA Publication 311-05	Certified Ratings Program
AMBA	Method of Evaluating Load Ratings of Bearings ANSI-11 (r1999)
ANSI/AMCA Standard 204-96	Balance Quality and Vibration Levels for Fans
AMCA Standard 500-D-98	Laboratory Methods of Testing Dampers For Rating
AMCA Standard 500-L-99	Laboratory Methods of Testing Louvers For Rating
SMACNA	Medium Pressure Plenum Construction Standard
ANSI Z9.5	Laboratory Design
ASHRAE	Laboratory Design Guide
IBC 2009	International Building Code
ICC-ES AC 156	International Code Council Evaluation Services Acceptance Criteria 156
OSHPD	Office of Statewide Health Planning and Development and Special Seismic Certification Preapproval (OSP)

B. QUALITY ASSURANCE:

1. Performance ratings: Conform to AMCA standard 211 and 311. Fans must be tested in accordance with AMCA 211 and 311 in an AMCA accredited

laboratory and certified for sound and air performance. Fan shall be licensed to bear the AMCA ratings seal for both sound and air performance.

2. Classification for Spark Resistant Construction shall conform to AMCA 99.

3. Each fan shall be vibration tested before shipping, as an assembly, in accordance with AMCA 204-05. Each assembled fan shall be test run at the factory at the specified fan RPM and vibration signatures shall be taken on each bearing in three planes - horizontal, vertical, and axial. The maximum allowable fan vibration shall be less than 0.15 in. /sec peak velocity; filter-in reading as measured at the fan RPM. This report shall be provided at no charge to the customer upon request.

4. Seismic certification requires each fan shall be shake table tested at an independent test facility, shall meet an Importance Factor of 1.5, an SDS Value of 2.28 , all Site Classes, all Occupancy Categories and all Seismic Design Categories (A-F).

5. Laboratory exhaust system defined in this section shall have a 12 month warranty from the date of shipment.

1.03 SUBMITTALS

Submittals shall comply with the requirements of Section 01300 and shall include the following information:

1. A copy of this specification section, with addendum updates included, and all referenced and applicable sections, with addendum updates included, with each paragraph check-marked to indicate specification compliance or marked to indicate requested deviations from specification requirements. Check marks (✓) shall denote full compliance with a paragraph as a whole. If deviations from the specifications are indicated, and therefore requested by the Contractor, each deviation shall be underlined and denoted by a number in the margin to the right of the identified paragraph, referenced to a detailed written explanation of the reasons for requesting the deviation. The Construction Manager shall be the final authority for determining acceptability of requested deviations. The remaining portions of the paragraph not underlined will signify compliance on the part of the Contractor with the specifications. Failure to include a copy of the marked-up specification sections, along with justification(s) for any requested deviations to the specification requirements, with the submittal shall be sufficient cause for rejection of the entire submittal with no further consideration.

2. A copy of the contract document control diagrams and process and instrumentation diagrams relating to the submitted equipment, with addendum updates that apply to the equipment in this section, marked to show specific changes necessary for the equipment proposed in the submittal. If no changes are required, the drawing or drawings shall be

marked *"no changes required"*. Failure to include copies of the relevant drawings with the submittal shall be cause for rejection of the entire submittal with no further review.

3. Predicted performance data and curves as applicable, developed for the specified design and operating requirements and characteristics.

4. Installation requirements showing clearance required for maintenance purposes.

5. Motor data form 11060-A as required in section 11060.

1.04 ENVIRONMENTAL CONDITIONS

Environmental conditions are specified in Section 01800.

PART 2--PRODUCTS

2.01 ACCEPTABLE PRODUCTS

Fans shall be Greenheck (model Vektor-H), Penn Barry, Cook, or equal, modified to provide the specified features and to meet specified operating conditions.

2.02 MATERIALS

Component	Material
Fan wheel	Aluminum
Fan housing	Welded steel
Shaft	Steel

Materials specified are considered the minimum acceptable for the purposes of durability, strength, and resistance to erosion and corrosion. The Contractor may propose alternative materials for the purpose of providing greater strength or to meet required stress limitations. However, alternative materials must provide at least the same qualities as those specified for the purpose.

2.03 EQUIPMENT

A. GENERAL:

1. Fans shall be completely assembled as a packaged unit and shall be designed for outdoor installation.

2. Base fan performance at standard conditions (density 0.075 lb/ft^3).

3. Fans selected shall be capable of accommodating static pressure and flow variations of +/-15% of scheduled values.

4. Each fan shall be belt driven.

5. Each fan to be equipped with 316 stainless steel lifting lugs for corrosion resistance.

6. Fasteners exposed to corrosive exhaust shall be stainless steel.

7. Fan assembly shall be designed for a minimum of 125 mph wind loading, without the use of guy wires.

B. FAN:

The fan shall be of the double bearing overhung design type, with bearings isolated from the air stream. Fan wheels shall have backward inclined type blades.

1. Fan Housing and Outlet:

a. Fan housing to be aerodynamically designed with high-efficiency inlet, engineered to reduce incoming air turbulence.

b. Fan housing shall be welded steel and meet specification section 2.15 for corrosion resistant coating. No uncoated metal fan parts shall be acceptable.

c. Fan housings that are fabricated of polypropylene or fiberglass that have lower mechanical properties than steel, have rough interior surfaces in which corrosive, hazardous compounds can collect, and / or which chalk and structurally degrade due to the UV component of the sunlight shall not be acceptable.

d. A high velocity conical discharge nozzle shall be supplied by the fan manufacturer and be designed to efficiently handle an outlet velocity of up to 6,000 fpm. Discharge stack caps or hinged covers, impeding exhaust flow shall not be permitted.

e. Provide housing drain for removal of rain and condensation.

f. A bolted and gasketed access door shall be supplied in the fan housing allowing for impeller inspection or removal of impeller, shaft and bearings without removal of the fan housing.

g. Standard finish color to be gray.

2. Fan Impeller:

   a. Fan impeller shall be centrifugal, backward inclined, with non-stall characteristics. The impeller shall be electronically balanced both statically and dynamically per AMCA Standard 204.

   b. Fan impeller shall be manufactured of aluminum (AMCA type B spark resistant), fully welded and meet specification section 2.15 for corrosion resistant coating.

3. Fan Bypass Air Plenum:

   a. For constant volume systems, the fan shall be connected directly to the exhaust duct without the need of a bypass air plenum. Fans mounted directly to roof curbs shall be provided with a damper tray located in the roof curb for mounting of the gravity isolation damper.

   b. For variable volume systems, a bypass air plenum shall be provided as shown on drawings. The plenum shall be equipped with a bypass air damper and intake air hood with bird screen for introducing outside air at roof level upstream of the fan.

   c. The plenum shall be constructed of fully welded steel, meet specification section 2.15 for corrosion resistant coating, and mount on roof curb as shown on the project drawings. Plenums that are fabricated of plastics or resins that are combustible and have mechanical properties less than steel shall not be acceptable.

   d. The bypass air plenum shall be mounted on factory fabricated roof curb provided by the fan manufacturer, as shown on the project drawings (see section 2.5)

   e. Fan designs that use inlet flexible connectors that can leak causing loss of lab exhaust shall not be accepted.

   f. Bypass air dampers shall be opposed-blade design, and coated with up to 4 mils of Hi-Pro Polyester resin, electrostatically applied and baked.

   g. A fan isolation damper, either gravity backdraft or two position actuated, fabricated of steel or aluminum and coated with minimum 4 mils of Hi-Pro Polyester resin, electrostatically applied and baked, shall be provided as shown on the project documents.

   h. Blower / Plenum vibration isolation shall be limited to neoprene / cork vibration pads.

4. Bypass Air Plenum Curb:

   a. Exhaust system manufacturer shall supply a structural support curb for the plenum, of specified height, as shown on the drawings.

b. Curb shall be fabricated of a minimum of 14 gauge corrosion resistant coated steel and structurally reinforced. Seismic certification requires a minimum of 12 gauge corrosion resistant coated steel and structurally reinforced roof curb be provided.

c. Curbs shall be insulated.

d. When properly anchored to the roof structure, the standard curb / plenum / blower assembly shall withstand wind loads of up to 125 mph without additional structural support.

5. Fan Motors and Drive:

a. Motors shall be premium efficiency, standard NEMA frame, 1,800 or 3,600 rpm, TEFC with a 1.15 service factor. A factory-mounted NEMA 3R disconnect switch shall be provided for each fan. Motor maintenance shall be accomplished without fan impeller removal or requiring maintenance personnel to access the contaminated exhaust components.

b. Drive belts and sheaves shall be sized for 200% of the motor horsepower, and shall be readily and easily accessible for service, if required. Drive shall consist of a minimum of two belts under all circumstances.

c. Fan shaft to be turned and polished of 1040 steel material (optional 316 stainless steel) as standard, coated with corrosion resistant coating.

d. Fan shaft bearings shall be Air Handling Quality, ball or roller pillow block type and be sized for an L-10 life of no less than 100,000 hours. Bearings shall be fixed to the fan shaft using concentric mounting locking collars, which reduce vibration, increase service life, and improve serviceability. Bearings that use set screws shall not be allowed.

e. All shaft bearings shall have extended lube lines with zerk fittings.

6. Corrosion-Resistant Coating:

1. All fan and system components (fan, nozzle, windband and plenum) shall be corrosion resistant coated with LabCoat™, a two part electrostatically applied and baked, sustainable, corrosion resistant coating system. Standard finish color to be gray.

2. All parts shall be cleaned and chemically prepared for coating using a multi-stage wash system which includes acid pickling that removes oxide, increases surface area, and improves coating bond to the substrate.

3. The first powder coat applied over the prepared surface shall be a zinc rich epoxy primer (no less than 70% zinc) and heated to a gelatinous consistency (partial cure) at which the second powder coat of polyester resin shall be electrostatically applied and simultaneously be cured at a uniform temperature of 400°F.

4. The coating system, a total thickness of up to 6 mils, is not affected by the UV component of sunlight (does not chalk), and has superior corrosion resistance to acid, alkali, and solvents. Coating system shall exceed 4000 hour ASTM B117 Salt Spray Resistance.

5. Note that 10-20 mil thick wet coating systems pollute the environment (air and water), and that these manually applied coatings are not uniform over the impeller surface and can cause fan imbalance and vibration.

C. BEARINGS:

Bearings shall be self-aligning; grease lubricated and prelubed, roller or ball antifriction bearings of the pillow block type complete with grease fittings. All bearings shall have an AFBMA L-10 rating life of 100,000 hours.

D. MOTOR AND DRIVE ASSEMBLY:

Fan shall be provided with adjustable pitch sheaves and adjustable motor bases suitable for a plus or minus 5 percent adjustment in operating speed. Motors shall operate at 1,750 rpm and shall be as specified in Section 11060. Motors 1 hp and larger shall be the Type 2 high efficiency-type inverter duty.

E. ACCESSORIES:

Fume hood fans shall include the following accessories:

1. Belt guard
2. Weather cover
3. Spark-resistant construction
4. Shaft seals
5. Spring loaded, stainless steel backdraft damper
6. Access door
7. Drain connection
8. Conical discharge nozzle for outlet velocity of 3,000 fpm
9. Stack extension
10. Aluminum back draft damper
11. Galvanized steel 12-inch roof curb

2.04 SPARE PARTS

One set of drive belts shall be provided for each fan.

2.05 PRODUCT DATA

The following information shall be provided in accordance with Section 01300:

1. Manufacturer and manufacturer's type designation.

2. Manufacturer's catalog and other data confirming conformance to specified design, material and equipment requirements.

3. Applicable operation and maintenance data in accordance with Section 01730.

4. Certification that the units have been tested and rated in accordance with the AMCA Standard 210 Test Code and comply with the AMCA Certified Ratings Program.

5. Motor data as specified in paragraph 11060-2.05.

PART 3--EXECUTION

3.01 GENERAL

Each fan shall be installed as shown and in accordance with manufacturer's recommendations.

3.02 FIELD TESTING

Each fan shall be completely field tested in accordance with Section 15990 to guarantee compliance with the project manual.

END OF SECTION

SECTION 15889

GREASE FILTER/MIST ELIMINATOR

PART 1—GENERAL

1.01 DESCRIPTION

A. SCOPE:

This section specifies duct-mounted filters for removing grease and mist from corrosive air streams. The space is limited for the installation of the grease filter/mist eliminator. The grease filter/mist eliminator must fit in the space available.

B. EQUIPMENT LIST:

Item	Equipment No.
Grease filter/Mist eliminator for Headworks Odor Control Unit	FLT-2110
Grease filter/Mist eliminator Membrane Odor Control Unit	FLT-2131

1.02 QUALITY ASSURANCE

This section contains references to the following documents. They are a part of this section as specified and modified. Where a referenced document contains references to other standards, those documents are included as references under this section as if referenced directly. In the event of conflict between the requirements of this section and those of the listed documents, the requirements of this section shall prevail.

Unless otherwise specified, references to documents shall mean the documents in effect at the time of Advertisement for Bids or Invitation to Rid (or on the effective date of the Agreement if there were no Bids). If referenced documents have been discontinued by the Issuing organization, references to those documents shall mean the replacement documents issued or otherwise identified by that organization or, if there are no replacement documents, the last version of the document before it was discontinued. Where document dates are given in the following listing, references to those documents shall mean the specific document version associated with that date, regardless of whether the document has been superseded by a version with a later date, discontinued or replaced.

Reference	Title
SMACNA	Rectangular and Round Industrial Duct Construction Standards

1.03 PERFORMANCE REQUIREMENTS

A. GENERAL:

Units specified in this section shall be designed and selected for continuous outdoor operation with air containing corrosive and flammable vapors and gases generated from the treatment and conveyance of municipal wastewater. Vapors and gases may be expected to include methane, hydrogen sulfide, chlorine gas, sulfur dioxide, gasoline vapors, ammonia, grease, and water saturated air. The air stream may also be expected to contain droplets of dilute sulfuric acid. Air stream temperatures are expected to vary between 50 and 95°F.

B. OPERATING REQUIREMENTS:

The grease filter/mist eliminator shall remove 99.8% of all particles greater than 10 microns in diameter at 400 feet per minute face velocity. Face velocity through pads shall not exceed 500 feet per minute to avoid carry over. The units shall comply with the following:

Equipment No.	Capacity, scfm	Max. pressure drop with filters clean, in., WC	Connection diameter, inches
FLT-2110	31,000	0.5	54
FLT-2131	23,000	0.5	48

1.04 SUBMITTALS

The following information shall be provided in accordance with the requirements of Section 01300:

1. A copy of the contract drawing, this specification section, with addendum updates included, and all referenced and applicable sections, with addendum updates included, with each paragraph check-marked to indicate specification compliance or marked to indicate requested deviations from specification requirements. Check marks (✓) shall denote full compliance with a paragraph as a whole. If deviations from the specifications are indicated, and therefore requested by the Contractor, each deviation shall be underlined and denoted by a number in the margin to the right of the identified paragraph, referenced to a detailed written explanation of the reasons for requesting the deviation. The Engineer shall be the final authority for determining acceptability of requested deviations. The remaining portions of the paragraph not underlined will signify compliance on the part of the Contractor with the specifications. *Failure to include a copy of the marked-up specification sections, along with justification(s) for any requested deviations to the specification requirements, with the submittal shall be sufficient cause for rejection of the entire submittal with no further consideration.*

2. Detailed installation drawings showing equipment layout, and the size and location of all piping, electrical, instrumentation and structural connections.

3. Listing of equipment components and materials.

4. Manufacturer's data confirming conformance to the specified conditions. Include, as a minimum, horsepower, electrical requirements, and efficiencies. Predicted performance data and/or curves as applicable developed for the specific application, confirming conformance to specified design and operating requirements and characteristics.

PART 2—PRODUCTS

2.01 MANUFACTURERS

The Owner and Engineer believe the following candidate manufacturers are capable of producing equipment and/or products that will satisfy the requirements of the Section. This statement, however, shall not be construed as an endorsement of a particular manufacturer's products, nor shall it be construed that a named manufacture's standard equipment or products will comply with the requirement of this Section. Candidate manufacturers include Diamond Fiberglass, Munters, ECS, without exception.

2.02 MATERIALS

Component	Material
Housing	FRP
First Stage Pad	Type 304 stainless steel
Second Stage Pad	Polypropylene or 304 stainless steel
Gaskets	EPDM
Hardware	Type 316 stainless steel

2.03 EQUIPMENT FEATURES

A. HOUSING:

The grease filter/mist eliminator shall consist of two filter pads housed inside an enclosure. The enclosure shall be suitable for installation outdoors. The housing shall be provided with access door and chamber to give access to both stages filter pads. The housing shall allow removal and replacement of the filter pads through a door or by flanged connections and allow manual removal of the cartridges by one operator. The housing shall have a round flanged for installation in the air piping**.** The flanges shall be drilled and gaskets shall be provided. The housing shall withstand 20-inches water column pressure and 12-inches water column vacuum.

The housing shall be provided with support legs and angle clips for attaching to the equipment pad. A drain connection with a ball valve shall be provided. Two pressure gauges

shall be provided to measure the pressure drop across unit. FRP construction housings constructed of fiberglass reinforced plastic shall comply with the following.

1. The exterior shall have an opaque pigment coat with ultraviolet inhibitor.

2. The interior shall have a vinyl ester resin Nexus veil corrosion liner.

3. Wall thickness shall not be less than 1/4-inch.

4. The section housing the filter pad shall be PVC lined to protect FRP corrosion liner from scratching.

B. FILTER PADS:

The first pad shall be for grease removal and shall be minimum 2-inches thick. The second pad shall be for mist removal and shall be minimum 4-inches thick. The pads shall be assembled side by side to cover the total filter face area. The pad shall be water washable. The pads shall be removable by one operator for cleaning. Weight of individual pads shall not exceed 20 pounds. A differential pressure gage shall be provided to measure the pressure drop across unit. The mist eliminator shall be provided with a 2” drain connection. The mist eliminator shall be provided with hinged door on both sides to facilitate filter removal.

2.04 INSTRUMENTS

A differential pressure indicating transmitter shall be supplied to measure pressure across the two pads. Primary element shall be corrosion resistant and manufactured by Dwyer or equal.

2.05 STANDBY COMPONENTS

Provide one extra set of first and second stage grease filter pads.

2.06 PRODUCT DATA

The following information shall be provided:

1. Applicable maintenance information.

2. Installation information containing instructions to be followed in the installation of the equipment and local control panel. As a minimum, the following information shall be included:

   a. Major parts list including weights of component parts.

   b. Procedures to be followed in unpacking and unloading, including directions indicating proper methods for moving the equipment.

   c. Instructions for field assembling of match-marked components as they will be shipped.

d. Instructions for anchoring and securing the equipment.

e. Site storage and protection requirements for equipment prior to installation.

PART 3—EXECUTION

3.01 INSTALLATION

Install each grease filter/mist eliminator as shown on the Drawings and as recommended by the manufacturer. Unit shall be supported so that there is no strain on the piping to which it is connected. Install to assure access for filter removal. Route the drain pipe to a point of disposal.

Permanently mark the two pressure gauges as recommended by the manufacturer for filter maintenance.

END OF SECTION

SECTION 15891

SHEET METAL DUCTWORK

PART 1—GENERAL

1.01 DESCRIPTION

A. SCOPE:

This section specifies plenums, sheet metal housings, ductwork, equipment connections, reinforcing and other devices required to make the air distribution systems complete and operational.

B. TYPE:

Ductwork and appurtenances shall be designed and fabricated specifically for the applications described under the conditions specified.

C. DESIGN CRITERIA AND CONSIDERATIONS:

1. GENERAL: Unless otherwise specified, sheet metal gauge, reinforcing, hanger and support systems, ductwork joint types and other basic design construction details shall be in accordance with the SMACNA HVAC Duct Construction Standards. Ductwork shall be constructed in accordance with requirements for pressure classification shown in the DUCTWORK SCHEDULE. Ductwork shall be fabricated to the configurations and dimensions specified. Dimensions specified indicate net-free area; dimensions shall be increased by the thickness of the lining where internal lining is required.

2. SYSTEM LEAKAGE: All joints shall be sealed as required to limit total system leakage to a maximum of 1 percent of the specified equipment airflows.

3. CHANGE IN DUCT SIZE: Change in duct size shall be made by a uniformly tapering section. The change in direction of the tapering section shall not be more than 1 inch in 5 inches of run, unless otherwise specified.

4. BENDS IN DUCT: With the exception of mitered bends, all bends in ducts shall have inside radii equal to the duct width or diameter. Double wall turning vanes shall be provided at all 90-degree mitered bends.

5. DUCT SLEEVES: Whenever ducts extend through concrete or masonry walls, floors or ceilings, they shall be provided with a sleeve as specified. Concrete inserts shall be provided before pour to support all ductwork under this section.

6. DUCT OPENINGS: Access doors or hand holes shall be provided in ducts at locations to reach modulating dampers, fusible links, controllers and any other moveable devices in the ducts. The opening shall be 1 inch less duct size or of adequate size to reach in and maintain these devices. Two-inch diameter nipples with threaded caps shall be welded to the duct where specified or directed by the Engineer for balancing the system.

7. VIBRATION ISOLATION FLEXIBLE CONNECTIONS: Flexible connections shall be provided at duct connections to motor-driven air handling equipment and other locations specified. Flexible connections shall be UL-approved and provided with the necessary angle, straps, bolts, clips or other fasteners to secure the flexible material to the equipment and ducts. Flexible connections exposed to the weather shall be provided with approved sheet metal weather covers.

8. INSULATION: Insulation shall be as specified in Section 15260. Exhaust air and foul air ducts need not be insulated, unless otherwise specified.

1.02 QUALITY ASSURANCE

A. REFERENCES:

This section contains references to the following documents. They are a part of this section as specified and modified. Where a referenced document contains references to other standards, those documents are included as references under this section as if referenced directly. In the event of conflict between the requirements of this section and those of the listed documents, the requirements of this section shall prevail.

Unless otherwise specified, references to documents shall mean the documents in effect at the time of Advertisement for Bids or Invitation to Bid (or on the effective date of the Agreement if there were no Bids). If referenced documents have been discontinued by the issuing organization, references to those documents shall mean the replacement documents issued or otherwise identified by that organization or, if there are no replacement documents, the last version of the document before it was discontinued. Where document dates are given in the following listing, references to those documents shall mean the specific document version associated with that date, regardless of whether the document has been superseded by a version with a later date, discontinued or replaced.

Reference	Title
ASHRAE CH 1	Handbook - Equipment Volume, Duct Construction
ASHRAE CH 33	Handbook - Fundamentals Volume, Duct Design
ASTM A167	Stainless and Heat-Resisting Chromium-Nickel Steel Plate, Sheet and Strip
ASTM A525	General Requirements for Steel Sheet, Zinc-Coated (Galvanized) by the Hot-Dip Process
ASTM A527/A527M	Steel Sheet, Zinc-Coated (Galvanized) by the Hot-Dip Process, Lock-Forming Quality
ASTM B209	Aluminum and Aluminum Alloy Sheet and Plate
ASTM B211	Aluminum and Aluminum Alloy Bar, Rod and Wire

Reference	Title
ASTM B308	Aluminum - Alloy 6061-T6 Standard Structural Shapes, Rolled or Extruded
NFPA 90A	Standard for the Installation of Air Conditioning and Ventilating Systems
SMACNA	HVAC Duct Construction Standards Metal and Flexible
SBC	Standard Building Code
SMC	Standard Mechanical Code
UL 181	Factory-made Air Ducts and Connectors

B. REQUIREMENTS OF REGULATORY AGENCIES:

Ductwork construction, installation, and air system performance shall comply with SMC, ASHRAE CH-1 and CH-33, and SMACNA Duct Construction Standards.

1.03 SUBMITTALS

The following information shall be provided in accordance with Section 01300:

1. A copy of this specification section, with addendum updates included, and all referenced and applicable sections, with addendum updates included, with each paragraph check-marked to indicate specification compliance or marked to indicate requested deviations from specification requirements. Check marks (✓) shall denote full compliance with a paragraph as a whole. If deviations from the specifications are indicated, and therefore requested by the Contractor, each deviation shall be underlined and denoted by a number in the margin to the right of the identified paragraph. The remaining portions of the paragraph not underlined will signify compliance on the part of the Contractor with the specifications. The submittal shall be accompanied by a detailed, written justification for each deviation. *Failure to include a copy of the marked-up specification sections, along with justification(s) for any requested deviations to the specification requirements, with the submittal shall be sufficient cause for rejection of the entire submittal with no further consideration.*

2. A copy HVAC airflow schematics, and HVAC drawings with addendum updates that apply to the equipment in this section, marked to show specific changes necessary for the equipment

3. Furnish HVAC duct layout and sections drawings including duct support locations.

4. Duct materials and thickness for each system.

5. Calculations for the duct thickness selected for various systems.

PART 2—PRODUCTS

2.01 GENERAL

The Contractor shall provide all ductwork, plenums, and all auxiliary work and products of any kind necessary to make the HVAC systems complete and ready for operation. Ductwork shall comply with the following restrictions and conditions:

1. Ductmate systems may be used.
2. Snap lock seams shall not be permitted.
3. Where space conditions permit, full radius turns shall be used at offsets.
4. Turning vanes shall be provided where tees, bends, and elbows are not 1-1/2 times the width at centerline and in all rectangular elbows.
5. Ductwork elbows, takeoffs, and fittings shall be in accordance with the SMACNA and ASHRAE standards for the pressure class and conditions specified.
6. Visible duct deflection, loss of shape, or unwarranted noise or vibration resulting from faulty or inadequate support, reinforcing, metal gauge, fabrication, or joint spacing shall be corrected at no expense to the Owner.

2.02 MATERIALS

A. LOW PRESSURE SYSTEMS:

Component	Material
Duct	Aluminum, alloy 3003-H14, conforming to ASTM B209 and ASTM B211
Duct Sleeve	Aluminum, alloy 3003-H14, conforming to ASTM B209 and ASTM B211
Flexible Duct Connector	Noncombustible, weather and ozone resistant, abrasion-proof woven fiberglass fabric with coating weighing not less than 24 ounces per square yard. Maximum flame spread rating of 25, smoke rating of 50 for all materials including connecting tape, etc. UL 181-approved.
Turning Vanes	Same as duct material.
Hangers and Supports, Rivets and Bolts, Reinforcing	Same as duct material.

2.03 JOINTS AND REINFORCING

Transverse stiffeners and joints shall be appropriately spaced to maintain duct cross-section integrity in accordance with the pressure class specified and at the prevailing operating velocities. After joints are crimped, they shall be further secured by bottom punching or riveting. Longitudinal seams shall be Pittsburgh lock and shall be cross-broken outward. Intake, or exhaust, side ducts shall be cross-broken inward. Discharge ducts shall be cross-broken outward. All plenums and casings shall be similarly cross-broken and further reinforced with 1-inch x 1-inch x 1/8-inch angles running diagonally between joints, riveted to the casings.

Ductwork shall have slip joints. Joints shall not interfere with airflow in the ducts. Exterior ducts shall be stiffened, braced, and supported in a manner designed to maintain duct integrity and cross-section under wind and snow loads specified in the appropriate codes or local standards. Interior ducts shall be suitably braced and stiffened at floor and roof penetrations as well as over their unsupported length in a manner designed to maintain duct integrity and limit vibration and noise in accordance with recognized standards of the industry.

2.04 DUCT SLEEVES

Sleeve flanges shall not be less than 4 inches wide and shall be installed tight against each side of the barrier. Sleeves shall be 2 inches larger than the duct or external duct insulation. The space between the duct (or insulation) and the sleeve shall be packed with fiberglass or material of original wall. Duct flanges not less than 4 inches wide shall be installed tight against the wall on each side and fastened to the duct sleeves.

2.05 HANGERS AND SUPPORTS

A. GENERAL:

Duct support spacing shall be in accordance with the SMACNA standards for the pressure class and conditions specified and prevailing in the system. Supports shall be spaced to prevent visible duct deflection and loss of system integrity. Aluminum ductwork shall be constructed with strength and dimensional stability comparable to conventional steel duct. In the absence of other criteria, aluminum sheet and reinforcing shall have a moment of inertia three times greater than that recommended for steel ductwork. Supports shall be designed in accordance with SBC and SMC.

B. CONCEALED CEILING SPACES:

Rectangular ductwork shall be supported with metal strap hanger screwed to the sides and bottom of duct. One strap each side with minimum of two screws in side and one in bottom of each strap.

C. EXPOSED AREAS:

Rectangular ductwork shall be supported with shelf angle trapeze hanger or uni-strut with rods or angles by welding or bolting. Sway bracing shall be provided, minimum of one at right angle to each duct run.

Round ductwork shall be supported with two half-round bands with rods bolted to the bands. Sway bracing shall be provided, minimum of one at right angle to each duct run.

2.06 FLEXIBLE CONNECTIONS

Flexible connection joints shall be airtight and have a minimum allowance of 1-inch slack all around. Flexible connections shall be designed to be removed from the line and be reinstalled without disassembling adjacent ductwork.

Connections shall be installed with a minimum 4-inch clearance between metal parts on fan connections, equipment connections, and our distribution devices.

2.07 TURNING VANES

Turning vanes shall be 2-inch blades for ducts up to 18 inches in either dimension and shall be 4-1/2-inch blades for larger ducts. All turning vane assemblies shall be finished with an air-dried phenolic corrosion-resistant coating prior to installation. All turning vanes shall be constructed of double thickness vanes.

2.08 DAMPERS

Manually operated, opposed-blade or single-blade, quadrant-type balancing dampers shall be provided in each branch duct take-off after leaving the main duct.

Single-blade dampers shall be constructed for ducts 9-1/2 by 30 inches and smaller. Opposed blade dampers shall be constructed with a maximum blade size of 12 by 72 inches.

2.09 DUCTWORK COATING

Exposed uninsulated or internally insulated ductwork shall be coated on all external surfaces in accordance with Section 09900 except in mechanical rooms. Stainless steel ductwork shall be uncoated, unless otherwise specified

2.10 ACOUSTICAL LINING

Acoustical lining shall as specified in Section 15260 for internal ductwork insulation.

PART 3—EXECUTION

3.01 INSTALLATION

Ductwork shall be installed in accordance with SMACNA and NFPA. All ductwork indicated on the drawings is schematic. Therefore, changes in duct size, duct configuration, and location may be necessary to conform to field conditions.

Ductwork and accessories shall be installed to provide a system free from buckling, warping, breathing, and vibration. Ductwork installation shall permit installation of other required services without piercing, crimping, or reducing duct sizes. Where space conditions permit, full

radius turns shall be used at offsets. The inside of all ducts visible through grilles and registers shall be painted flat black.

All ductwork shall be made airtight. Flanged joints shall be sealed with closed-cell neoprene gaskets compressed between mating flanges. All other joints and seams shall be sealed with liquid or mastic type sealants. Taped joints shall not be permitted. All joints shall comply with the requirements of SMACNA Seal Class A.

3.02 TESTS

Tests shall be as specified in Section 15990. Duct test holes with patches in ducts shall be provided where directed or necessary for testing and balancing purposes.

3.03 ACOUSTICAL LINING

Acoustical lining may be used only where specified in the Ductwork Schedule. Lining shall be installed as recommended by the manufacturer. Acoustically lined ductwork need not be wrapped with external thermal insulation.

3.04 DUCTWORK SCHEDULE

Ductwork material and pressure classification shall be as follows:

Area/ Unit	Material	Minimum Thickness (gauge)	Pressure Classification, (in., w. c.)
Pump Station Electrical Room	Aluminum	18	Low Pressure
Pump Room	Aluminum	18	Low Pressure
Wetwell and grinder vault	FRP	-	See Section 13234

END OF SECTION

SECTION 15911

DAMPERS

PART 1—GENERAL

1.01 DESCRIPTION

A. SCOPE:

This section specifies volume and control dampers for air system balancing and control. The damper shall be as shown on the Drawings. Only large dampers operators are assigned equipment numbers. Other dampers shall be as shown on the Drawings.

B. EQUIPMENT SCHEDULE:

Equipment No.	Item	Air Flow Rate, cfm	Size W x H, in.	Remarks
DPR-2154	Lab supply fan SF-2154 Discharge Damper	600/300	12 X 12	1, 2, 3
DPR-2161	Electrical room air handling unit AHU-2161 discharge damper	8,000	28 X 28	1, 2, 3
DPR-2162	Electrical room air handling unit AHU-2162 discharge damper	8,000	28 X 28	1, 2, 3

1. Parallel multi-blade damper.
2. Damper shall be low leakage type. Air leakage rate for 48 x 48-inch damper at 1-inch static pressure differential through closed damper shall not exceed 35 cfm.
3. Damper shall be of Aluminum construction.

1.02 QUALITY ASSURANCE

A. REFERENCES:

This section contains references to the following documents. They are a part of this section as specified and modified. Where a referenced document contains references to other standards, those documents are included as references under this section as if referenced directly. In the event of conflict between the requirements of this section and those of the listed documents, the requirements of this section shall prevail.

Unless otherwise specified, references to documents shall mean the documents in effect at the time of Advertisement for Bids or Invitation to Bid (or on the effective date of the Agreement if there were no Bids). If referenced documents have been discontinued by the issuing organization, references to those documents shall mean the replacement documents

issued or otherwise identified by that organization or, if there are no replacement documents, the last version of the document before it was discontinued. Where document dates are given in the following listing, references to those documents shall mean the specific document version associated with that date, regardless of whether the document has been superseded by a version with a later date, discontinued or replaced.

Reference	Title
AMCA Standard 500	Test Methods for Louvers, Dampers and Shutters
SMACNA	HVAC Duct Construction Standards--Metal and Flexible

B. CERTIFICATION:

Multiple blade dampers shall bear the AMCA certified ratings seal for both air leakage and performance.

C. FACTORY TESTS:

No specific factory tests are specified.

D. WARRANTY AND PERFORMANCE AFFIDAVIT:

A 1-year 100-percent parts and labor warranty against manufacturing defects or failure of the equipment specified in this section caused by normal wear and tear shall be provided. The warranty period shall start from the date of final acceptance of the equipment specified in this section.

No performance affidavit above and beyond the inclusion of the check marked section(s) as specified in the Submittals paragraph of this section is specified.

1.03 SUBMITTALS

The following submittals shall be provided as specified in Section 01300:

1. A copy of this specification section, with addendum updates included, and all referenced and applicable sections, with addendum updates included, with each paragraph check-marked to indicate specification compliance or marked to indicate requested deviations from specification requirements. Check marks (✓) shall denote full compliance with a paragraph as a whole. If deviations from the specifications are indicated, and therefore requested by the Contractor, each deviation shall be underlined and denoted by a number in the margin to the right of the identified paragraph. The remaining portions of the paragraph not underlined will signify compliance on the part of the Contractor with the specifications. The submittal shall be accompanied by a detailed, written justification for each deviation. *Failure to include a copy of the marked-up specification sections, along with justification(s) for any requested*

deviations to the specification requirements, with the submittal shall be sufficient cause for rejection of the entire submittal with no further consideration.

2. A copy of the control diagrams, HVAC airflow schematics, and HVAC drawings with addendum updates that apply to the equipment in this section, marked to show specific changes necessary for the equipment proposed in the submittal. If no changes are required, the drawing or drawings shall be marked "No Changes Required." *Failure to include copies of the relevant drawings with the submittal shall be cause for rejection of the entire submittal with no further review.*

3. Manufacturer's catalog and/or other data confirming conformance to specified design, material and equipment requirements.

4. Certified results of pressure drop test data and water penetration data.

5. Electric actuator data.

6. Damper plan and section drawing with location of damper motor.

PART 2—PRODUCTS

2.01 MANUFACTURERS

Candidate manufacturers include Arrow United Industries, Greenheck and Ruskin.

2.02 MATERIALS

Splitter blade damper and single blade damper material shall be the same as the material of the surrounding ductwork for which the damper is provided unless otherwise specified.

2.03 SPLITTER DAMPER

Splitter damper blade shall be minimum of 18-gauge galvanized steel and sized to fit the specified duct dimensions with 1/8-inch clearance all around. Splitter damper construction and minimum dimension shall comply with SMACNA standards.

2.04 SINGLE BLADE DAMPER

The damper hinge shall consist of a 3/8-inch pin at each side of damper blade to provide a pivot point for damper positioning.

Galvanized steel damper blade shall be minimum 22-gauge. Aluminum damper blade shall be minimum 20-gauge.

2.05 MULTIBLADE DAMPER

A. GENERAL:

Damper frame and blades shall be 12-gauge extruded aluminum. Frames and blades shall be 5-inch extruded channel with reinforcing bosses and groove inserts for silicone seals. Damper blade linkages shall be extruded aluminum and shall be located out of the air stream. Blades shall be provided with silicone seals.

B. PARALLEL BLADE:

Parallel blade dampers shall be constructed such that all damper blades rotate in the same direction when the damper is opened or closed.

C. OPPOSED BLADE:

Opposed blade dampers shall be constructed such that each damper blade rotates in the opposite direction of the blades adjacent to it when the damper is opened or closed.

2.06 BACKDRAFT AND BAROMETRIC DAMPERS

Damper blades shall be aluminum and shall be provided with neoprene or felt edge seals to ensure tight closure. Backdraft dampers shall be counterbalanced when installed in vertical ductwork. The blade interconnecting linkage shall be located within the damper frame and out of the air stream.

2.07 HEAVY DUTY DAMPERS

Dampers shall be heavy-duty industrial grade opposed blade control dampers. Dampers shall be constructed of 14-gauge galvanized steel channel frame with 8-inch depth and 2-inch flanges; Blades shall be V-type fabricated from 12-gauge galvanized steel. Blades shall be mounted on 0.75-inch type 304 stainless steel axles. Axles shall be mounted in ball bearings; the bearing shall be externally mounted and shall be replaceable. The axles shall be operated by out of the air stream blade-to-blade stainless steel linkage. The dampers shall be suitable for pressures to 8.5-inch water column and velocities to 3,000 fpm when tested in accordance with AMCA Standard 500.

2.08 OPERATORS

A. ELECTRIC ACTUATORS: (NOT USED)

B. PNEUMATIC ACTUATORS: (NOT USED)

2.09 MANUAL POSITIONER

A 3/8-inch locking quadrant shall be provided at one end of the damper, external to the ductwork, on manually adjusted dampers. Positioner extensions shall be provided for dampers installed in ductwork located in ceilings, walls or floors that is not directly accessible.

2.10 PRODUCT DATA

The following product data shall be provided in accordance with Section 01300:

1. Catalog data and dimensional drawing.

2. Shop drawings.

3. Applicable operating and maintenance data for damper operators in accordance with Section 01730.

PART 3—EXECUTION

3.01 INSTALLATION

Dampers shall be aligned and installed in the connecting ductwork in accordance with SMACNA standards and the manufacturer's recommendations. The Contractor shall locate damper positioners for direct access at the duct or install extensions and or doors where necessary for accessibility.

Balancing dampers shall be single blade type unless otherwise specified.

3.02 TEST AND ADJUSTMENT

Single blade dampers and splitter dampers shall be tested to assure operation through their full range of movement without binding or interference following installation. Multiple blade dampers shall be manually tested, prior to installation and following installation, to assure operation through their full range of movement without binding or interference. Final damper adjustments and positioning shall be performed during system balancing in accordance with Section 15990.

END OF SECTION

SECTION 15912

FIRE DAMPERS

PART 1--GENERAL

1.01 DESCRIPTION

A. SCOPE:

This section specifies all fire dampers for heating, ventilating and air conditioning systems.

B. OPERATING REQUIREMENTS:

Each fire damper shall cause a pressure drop of not more than 0.05-inch water column at an air velocity of 1500 feet per minute through the device. Each damper shall have the same fire-stop rating as the surrounding structure in which it is installed unless otherwise specified.

1.02 QUALITY ASSURANCE

A. REFERENCES:

This section contains references to the following documents. They are a part of this section as specified and modified. Where a referenced document contains references to other standards, those documents are included as references under this section as if referenced directly. In the event of conflict between the requirements of this section and those of the listed documents, the requirements of this section shall prevail.

Unless otherwise specified, references to documents shall mean the documents in effect at the time of Advertisement for Bids or Invitation to Bid (or on the effective date of the Agreement if there were no Bids). If referenced documents have been discontinued by the issuing organization, references to those documents shall mean the replacement documents issued or otherwise identified by that organization or, if there are no replacement documents, the last version of the document before it was discontinued. Where document dates are given in the following listing, references to those documents shall mean the specific document version associated with that date, regardless of whether the document has been superseded by a version with a later date, discontinued or replaced.

Reference	Title
BOCA	The BOCA Basic National Mechanical Code—Building Officials and Code Administrators International
NFPA 90A	Standard for the Installation or Air Conditioning and Ventilating Systems
SBCCI	Standard Mechanical Code--Southern Building Code Congress International
SMACNA	HVAC Duct Construction Standards--Metal and Flexible

Reference	Title
UL 555	Fire Dampers and Ceiling Dampers
UL 555S	Leakage Rated Dampers for Use in Smoke Control Systems
UMC	Uniform Mechanical Code--International Conference of Building Officials

B. CERTIFICATION:

Fire dampers shall be UL labeled and constructed in accordance with NFPA 90A requirements.

1.03 SUBMITTALS

The following submittals shall be provided as specified in Section 01300:

1. A copy of this specification section, with addendum updates included, and all referenced and applicable sections, with addendum updates included, with each paragraph check-marked to indicate specification compliance or marked to indicate requested deviations from specification requirements. Check marks (✓) shall denote full compliance with a paragraph as a whole. If deviations from the specifications are indicated, and therefore requested by the Contractor, each deviation shall be underlined and denoted by a number in the margin to the right of the identified paragraph. The remaining portions of the paragraph not underlined will signify compliance on the part of the Contractor with the specifications. The submittal shall be accompanied by a detailed, written justification for each deviation. *Failure to include a copy of the marked-up specification sections, along with justification(s) for any requested deviations to the specification requirements, with the submittal shall be sufficient cause for rejection of the entire submittal with no further consideration.*

2. A copy of the control diagrams, HVAC airflow schematics, and HVAC drawings with addendum updates that apply to the equipment in this section, marked to show specific changes necessary for the equipment proposed in the submittal. If no changes are required, the drawing or drawings shall be marked “No Changes Required.” *Failure to include copies of the relevant drawings with the submittal shall be cause for rejection of the entire submittal with no further review.*

3. Manufacturer's catalog and/or other data confirming conformance to specified design, material and equipment requirements.

PART 2--PRODUCTS

2.01 ACCEPTABLE PRODUCTS

Fire dampers shall be Ruskin, Safe-Air, Air Balance, or equal, modified to provide the specified features.

2.02 MATERIALS

Component	Material
Frame	Galvanized steel
Curtain	Galvanized steel
Sleeve	Galvanized steel

2.03 EQUIPMENT FEATURES

Fire dampers shall be the curtain type, with blades out of the airstream. Fire damper frame shall be 20-gage channel. The blades shall be 24-gage, interlocked to form a curtain across the frame opening. The damper blades shall be held in place by fusible links rated for 135 degree F temperature operation. Fire damper sleeves shall be the same gage as the connecting ductwork.

2.04 ACCESS DOOR

An access door shall be provided for each fire damper assembly. The access door and frame shall be constructed, in accordance with SMACNA standards, of metal of the same or heavier gage thickness as the ductwork. The door frame shall be clinch locked or tee locked to the duct. The access door shall be 1 inch smaller than the duct opening and shall be provided with an airtight seal.

2.05 SPARE PARTS

A quantity of 10 percent extra fusible links of each variety and operating characteristic used on the project shall be provided.

2.06 PRODUCT DATA

The following product data shall be provided in accordance with Section 01300:

1. Catalog data and dimensional drawings.
2. Shop drawings.

PART 3--EXECUTION

3.01 INSTALLATION

Fire dampers shall be installed in ductwork penetrating fire-rated walls, floors and ceilings as required by the building code and the local authority. Fire dampers shall be electrolitically isolated using a dielectric material when installed in ductwork systems constructed of aluminum or stainless steel. Fire damper sleeve connections shall be as specified in SMACNA standards.

An access opening shall be provided in ductwork attached to each fire damper. The access opening shall be large enough to permit inspection and resetting of the fire damper it serves. An access door shall be provided to cover the access opening. The Contractor shall stencil each access door "FIRE DAMPER ACCESS" with 2-inch high red letters.

3.02 TESTING

The Contractor shall disconnect the fusible link and operate the fire damper several times to assure proper, unobstructed operation.

END OF SECTION

SECTION 15940

DIFFUSERS, GRILLES, REGISTERS AND EXTRACTORS

PART 1—GENERAL

1.01 DESCRIPTION

This section specifies all ceiling diffusers, grilles, registers and extractors associated with the heating, ventilating, and air conditioning systems.

1.02 QUALITY ASSURANCE

All ceiling diffusers, grilles, registers, and extractors shall be installed as shown on the drawings and shall be of the size and capacity indicated thereon. Ratings and performance shall be in accordance with AMCA and ADC Standards.

1.03 SUBMITTALS

The following submittals shall be provided in accordance with Section 01300:

1. A copy of this specification section, with addendum updates included, and all referenced and applicable sections, with addendum updates included, with each paragraph check-marked to indicate specification compliance or marked to indicate requested deviations from specification requirements. Check marks (✓) shall denote full compliance with a paragraph as a whole. If deviations from the specifications are indicated, and therefore requested by the Contractor, each deviation shall be underlined and denoted by a number in the margin to the right of the identified paragraph. The remaining portions of the paragraph not underlined will signify compliance on the part of the Contractor with the specifications. The submittal shall be accompanied by a detailed, written justification for each deviation. *Failure to include a copy of the marked-up specification sections, along with justification(s) for any requested deviations to the specification requirements, with the submittal shall be sufficient cause for rejection of the entire submittal with no further consideration.*

2. A copy of the control diagrams, HVAC airflow schematics, and HVAC drawings with addendum updates that apply to the equipment in this section, marked to show specific changes necessary for the equipment proposed in the submittal. If no changes are required, the drawing or drawings shall be marked “No Changes Required.” F*ailure to include copies of the relevant drawings with the submittal shall be cause for rejection of the entire submittal with no further review.*

3. Manufacturer's catalogue, shop drawing and/or other data confirming conformance to specified requirements. Data shall include a complete

description of the ceiling diffusers, grilles, registers, extractors and accessories.

4. Specified air quantity, blow length, static pressure design and acoustical performance.

PART 2—PRODUCTS

2.01 GENERAL

A factory applied finish shall be provided as scheduled on the drawings. Color for diffusers installed in ceilings shall match ceiling tile color. Each unit shall be set flat against the room surface finish and shall have a felt gasket or seal to prevent air leakage. Ceiling diffusers, grilles, and registers shall be as specified on the drawings. All air outlets shall be factory painted and protected prior to shipment. Color shall be as selected by the Engineer. All diffusers, grilles, registers and extractors shall be by a single manufacturer.

2.02 SQUARE CEILING SUPPLY AIR DIFFUSERS

A. TYPE:

Anemostat RMD Series or Metalaire Series 5000 and 5500

1. Service: Ceiling or duct
2. Material: Aluminum
3. Frame: Suitable for flat surface mounting
4. Finish: Baked white enamel or other approved finish
5. Blow: As shown on the drawings
6. Accessories: Opposed blade volume damper

B. MANUFACTURERS:

Anemostat, Metalaire or Titus

C. SCHEDULE MARK:

1 2 3 4

Schedule Mark (1, 2, 3 or 4) corresponds to the horizontal diffusion pattern of the ceiling diffuser (i.e., 1-way, 2-way, 3-way or 4-way).

2.03 SQUARE/RECTANGULAR SUPPLY AIR REGISTERS

A. TYPE:

Anemostat S2HO Series or Metalaire VH Series

1. Service: Bottom or side of exposed duct

2. Material: Aluminum
3. Finish: Baked white enamel or other approved finish
4. Accessories: Opposed blade volume damper

B. MANUFACTURERS:

Anemostat, Metalaire or Titus

C. SCHEDULE MARK:

5

2.04 ROTATING “DRUM LOUVER” TYPE SUPPLY REGISTERS

A. TYPE:

Anemostat IJ Series or Metalaire RL Series

1. Service: Side of duct or in wall
2. Material: Aluminum
3. Finish: Baked white enamel or other approved finish
4. Accessories: None

B. MANUFACTURERS:

Anemostat, Metalaire or Titus

C. SCHEDULE MARK:

6

2.05 SQUARE/RECTANGULAR CEILING RETURN REGISTERS

A. TYPE:

Anemostat X3 or Metalaire Series RH

15. Service: Ceiling, wall or duct
16. Material: Aluminum
17. Finish: Baked white enamel or other approved finish
18. Accessories: Opposed blade volume damper

B. MANUFACTURERS:

Anemostat, Metalaire or Titus

C. SCHEDULE MARK:

1

2.06 RECTANGULAR OR SQUARE RETURN/EXHAUST REGISTERS

A. TYPE:

Anemostat GC5 Series or Metalaire CC5 Series

1. Service: Ceiling, wall or duct
2. Material: Aluminum
3. Finish: Baked white enamel or other approved finish
4. Accessories: Opposed blade volume damper

B. MANUFACTURERS:

Anemostat, Metalaire or Titus

C. SCHEDULE MARK:

2

2.07 SQUARE CEILING RETURN/EXHAUST REGISTERS

A. TYPE:

Anemostat X3P Series or Metalaire RP Series

1. Service: Ceiling or duct
2. Material: Aluminum
3. Frame: Suitable for flat surface mounting
4. Finish: Baked white enamel or other approved finish
5. Accessories: Opposed blade volume damper

B. MANUFACTURERS:

Anemostat, Metalaire or Titus

C. SCHEDULE MARK:

3

2.08 DAMPERS

Damper shall be all aluminum opposed-blade type, unless otherwise noted. Damper shall be mounted on back of grilles. Dampers shall be furnished by the diffuser manufacturer and shall be operated by a key through the grille face.

2.09 EXTRACTORS

Extractors shall be furnished by the diffuser manufacturer and shall be operated by a No. 3 key through the grille face or a No. 2 adaptor for operation from a knob located at the ceiling or on the duct. The extractor unit shall be aluminum, finished with an air-dried phenolic corrosion resistant coating prior to installation.

PART 3—EXECUTION

3.01 INSTALLATION

Diffusers, grilles, registers and extractors shall be aligned, connected and installed in accordance with the manufacturer's recommendations and with SMACNA Standards.

3.02 TESTING AND BALANCING

Testing, adjusting and balancing shall be as specified in Section 15990.

END OF SECTION

SECTION 15944

LOUVERS

PART 1—GENERAL

1.01 DESCRIPTION

A. SCOPE:

This section specifies intake and exhaust air louvers and accessories.

B. EQUIPMENT LIST:

Equipment No.	Equipment Description
LVR-2151	Mechanical Room Air Handling Unit Inlet Louver
LVR-2153	Men's Rest Room Exhaust Louver
LVR-2152	Women's Rest Room Exhaust Louver
LVR-2163	Electrical Room Air Purification Unit Inlet Louver
LVR-2141	Membrane Pump Area Exhaust louver
LVR-2142	Membrane-Citric Acid Room Exhaust Fan
LVR-2143-1	Membrane- Pump Room Intake Louver
LVR-2143-2	Membrane- Pump room Exhaust Louver

C. PERFORMANCE AND DESIGN REQUIREMENTS:

1. GENERAL: Louver shall be suitable for air supply or discharge service and shall be sized as specified.

Equipment No.	Louver Dimension (in.)			Minimum Free Area (ft^2)	Air Flow Rate (cfm)	Remarks
	Width	Height	Depth			
LVR-2151	24	24	6	1.6	1,120	Intake, Drainable
LVR-2152	16	16	6	0.55	200	Exhaust Drainable
LVR-2153	16	16	6	0.55	200	Exhaust Drainable
LVR-2163	24	24	6	1.6	250	Intake Drainable
LVR-2141	48	48	6	9.0	7,000	Exhaust Drainable
LVR-2142	24	24	6	1.6	550	Exhaust Drainable
LVR-2143-1	24	24	6	1.6	500	Intake Drainable

Equipment No.	Louver Dimension (in.)			Minimum Free Area (ft^2)	Air Flow Rate (cfm)	Remarks
	Width	Height	Depth			
LVR-2143-2	24	24	6	1.6	500	Exhaust Drainable

2. ACOUSTICAL LOUVERS: (NOT USED)

1.02 QUALITY ASSURANCE

A. REFERENCE:

This section contains references to the following documents. They are a part of this section as specified and modified. Where a referenced document contains references to other standards, those documents are included as references under this section as if referenced directly. In the event of conflict between the requirements of this section and those of the listed documents, the requirements of this section shall prevail.

Unless otherwise specified, references to documents shall mean the documents in effect at the time of Advertisement for Bids or Invitation to Bid (or on the effective date of the Agreement if there were no Bids). If referenced documents have been discontinued by the issuing organization, references to those documents shall mean the replacement documents issued or otherwise identified by that organization or, if there are no replacement documents, the last version of the document before it was discontinued. Where document dates are given in the following listing, references to those documents shall mean the specific document version associated with that date, regardless of whether the document has been superseded by a version with a later date, discontinued or replaced.

Reference	Title
AA 45	Designation System for Aluminum Finishes
AMCA Standard 500	Test Methods for Louvers, Dampers and Shutters
ASTM B221	Aluminum and Aluminum Alloy Extruded Bars, Rods, Wire, Shapes and Tubes
ASTM C1071	Standard Specification for Thermal and Acoustical Insulation (Mineral Fiber, Duct Lining Material)

B. CERTIFICATION:

Louvers shall bear the AMCA-certified ratings seal for both air performance and water penetration.

1.03 SUBMITTALS:

Submittals shall be provided in accordance with Section 01300 and shall include the following items:

1. A copy of this specification section, with addendum updates included, and all referenced and applicable sections, with addendum updates included, with each paragraph check-marked to indicate specification compliance or marked to indicate requested deviations from specification requirements. Check marks (✓) shall denote full compliance with a paragraph as a whole. If deviations from the specifications are indicated, and therefore requested by the Contractor, each deviation shall be underlined and denoted by a number in the margin to the right of the identified paragraph. The remaining portions of the paragraph not underlined will signify compliance on the part of the Contractor with the specifications. The submittal shall be accompanied by a detailed, written justification for each deviation. ***Failure to include a copy of the marked-up specification sections, along with justification(s) for any requested deviations to the specification requirements, with the submittal shall be sufficient cause for rejection of the entire submittal with no further consideration.***
3. A copy of the control diagrams, HVAC airflow schematics, and HVAC drawings with addendum updates that apply to the equipment in this section, marked to show specific changes necessary for the equipment proposed in the submittal. If no changes are required, the drawing or drawings shall be marked “No Changes Required.” ***Failure to include copies of the relevant drawings with the submittal shall be cause for rejection of the entire submittal with no further review.***
4. Manufacturer’s catalog and/or other data confirming conformance to specified design, material and equipment requirements.
5. Certified results of pressure drop test data and water penetration data.

PART 2—PRODUCTS

2.01 ACCEPTABLE PRODUCTS

Louvers shall be Airolite, Construction Specialties or Ruskin, modified to provide the specified features.

2.02 MATERIALS

Component	Material
Blades	ASTM B221, 6063-T52 Extruded Aluminum Alloy
Frame	ASTM B221, 6063-T52 Extruded Aluminum Alloy
Fasteners	Stainless Steel or Aluminum
Bird Screen	Aluminum

2.03 EQUIPMENT FEATURES

A. BLADES:

Blades shall be of the fixed, drainable type with interlocking blade braces to provide an uninterrupted horizontal line. Blades for all louvers shall be minimum 0.081-inch (12-gauge) thick. Slideable interlocked mullions shall have provisions for expansion and contraction.

B. FRAME:

The frame shall be minimum 0.081-inch (12-gauge) thick for all louvers. The louver frame shall be assembled by welding. The head, sill, and jamb shall be one-piece structural members and shall have an integral calking slot and retaining bead.

C. SCREEN:

The louver shall be furnished with a removable bird screen constructed of 1/2-inch mesh, 16-gauge (0.063-inch) wire and secured within a 10-gauge extruded aluminum frame. The screen shall be mounted as shown on the drawings.

D. FINISH:

Louver shall be coated with Kynar. Minimum coating thickness shall be 0.7 mil. The color shall be manufacturer's standard color as selected by the engineer.

2.04 ACOUSTICAL LOUVERS

Acoustical louvers shall be as specified in paragraph 15944-2.03 and shall be provided with the additional features specified herein. Acoustical louvers shall be the stationary type with insulated blades. The blades shall be insulated with mineral fiber conforming to ASTM C1071 requirements for acoustical insulation. The mineral fiber shall be held in place by a perforated aluminum sheet which completely covers the insulation and is securely fastened to the underside of the louver blade.

2.05 COMBINATION LOUVERS (NOT USED)

Combination louver shall be a stationary blade type louver and adjustable blade damper mounted together in a common frame. The stationary louver and frame shall be as specified in paragraphs 15944-2.02 and 15944-2.03. The adjustable blades shall be extruded 6063T5 aluminum, 0.125-inch (8-gauge) thick. The adjustable blade linkage shall be concealed in the louver frame and located out of the air stream. Vinyl edge seals shall be provided on the damper blades. The adjustable blades shall pivot on 1/2-inch diameter aluminum or steel pins located at the blade ends and attached to the operator linkage. The pivot pins shall be mounted on self-lubricating nylon or oil impregnated bronze bearings. Jamb seals shall be provided to prevent air leakage around closed damper blades.

2.06 OPERATORS (NOT USED)

A. ELECTRIC ACTUATORS:

Operators for combination louvers, where specified, shall be 120-volt motor actuators provided complete with all necessary linkage to position the damper throughout its full operating range. The actuator shall be mounted on the outside of the louver frame and shall have sufficient torque to position the size of damper served at the specified conditions. The damper area served by each operator shall not exceed the maximum area recommended by the actuator manufacturer. Time required for the operator's full stroke shall not exceed 1 minute.

B. PNEUMATIC ACTUATORS:

Operators for combination louvers, where specified, shall be piston, rolling diaphragm type pneumatic actuators provided complete with all necessary linkage to position the damper throughout its full operating range. The actuator shall be mounted outside of the louver frame and shall have sufficient torque and length of travel to accurately position the size of damper served at the specified conditions. The damper area served by each actuator shall not exceed the maximum area recommended by the actuator manufacturer. Time required for the operator's full stroke shall be 1 minute.

2.07 PRODUCT DATA

Certified results of pressure drop test data and water penetration data for all louvers shall be provided in accordance with Section 01300.

PART 3—EXECUTION

3.01 INSTALLATION

The louver shall be aligned, connected, and installed as specified and in accordance with the Manufacturer's recommendations. A bituminous coat shall be applied to all aluminum surfaces in contact with concrete or masonry.

3.02 TESTING

After completion of installation, all louvers with operating dampers, both manually and automatically operated, shall be completely field tested to ensure compliance with these specifications.

END OF SECTION

SECTION 15951

HVAC CONTROL SYSTEMS

PART 1--GENERAL

1.01 DESCRIPTION

A. SCOPE:

This section specifies the labor, materials, and equipment required for the provision of the heating, ventilating, and air conditioning control (HVAC) systems. The systems shall be provided complete with all local control panels and hardware and software, electronic and control equipment, transformers, sensors, programmable thermostats not furnished with the equipment, and wiring required for complete operating systems.

The HVAC systems shall be furnished and installed by a single manufacturer.

The engineering, installation, calibration, software programming and checkout necessary for complete and fully operational HVAC systems, as specified hereafter, shall be provided by the HVAC Contractor.

B. PERFORMANCE AND DESIGN REQUIREMENTS:

1 GENERAL: The controlled electric motor and other electrical devices or equipment in any system shall be operated as shown in the electrical schematic diagrams.

1.02 QUALITY ASSURANCE

A. GENERAL:

The systems shall be complete in all respects, tested and ready for operation. All materials, equipment, and apparatus shall be new and of first-class quality.

B. RELATED WORK SPECIFIED ELSEWHERE:

Work specified in this section shall conform to the requirements of Division 16.

C. STANDARDS:

All electrical work performed in the installation of the HVAC system as described in this specification shall be per the current edition of the National Electrical Code (NEC) and per applicable state and local codes and in conformance with Division 16.

1.03 SUBMITTALS

The following submittals shall be provided as specified in Section 01300:

1. Electrical wiring diagram and control panel elevations and detail.

2. Manufacturer's literature for each type of panel, controller or device shown on the riser diagram.

3. A written description, in detail, of all control sequences of equipment operation.

4. A copy of this specification section and the referencing section and all other applicable specification sections governing the pump, drive and driver, supports and specified appurtenances. The specification copies shall be complete with addendum updates included, with each paragraph check-marked to indicate specification compliance or marked to indicate requested deviations from specification requirements. Check marks (✓) shall denote full compliance with a paragraph as a whole. If deviations from the specifications are indicated and, therefore requested by the Contractor, each deviation shall be underlined and denoted by a number in the margin to the right of the identified paragraph. The remaining portions of the paragraph not underlined will signify compliance on the part of the Contractor with the specifications. The submittal shall be accompanied by a detailed, written justification for each deviation. ***Failure to include a copy of the marked-up specification sections, along with justification(s) for any requested deviations to the specification requirements, with the submittal shall be sufficient cause for rejection of the entire submittal with no further consideration***.

1.04 DESIGN AND SYSTEM OPERATING REQUIREMENTS

A. TREATMENT BUILDING ELECTRICAL ROOM:

1. SYSTEM DESCRIPTION: The Electrical Room shall be air conditioned by Air Handling Units AHU-2161 AND 2162 and Condensing Units CU-2161 and 2162.

2. OPERATION: Each air handling unit shall be controlled by an automatic programmable wall mounted room thermostat. Each air handling unit is provided with motor operated discharge damper. When AHU-2161 is operating the damper DPR-2161 shall open and when AHU-2162 is operating the damper DPR-2162 shall open. The discharge dampers shall be interlocked with respective air handling unit. The thermostat shall include a fan ON-AUTO switch and a system COOL-AUTO-OFF switch. The room thermostat for AHU-2161 shall be set at 80 degrees F for cooling. The room thermostat for air handling unit AHU-2162 shall be set at 82 deg F. When cooling is called for by the thermostat, the condensing unit CU-2161 and 2162 shall energize cooling in two steps. The two stage heating and cooling thermostat is provided by the air handling unit manufacturer under section 15850.

The local disconnect switch for the air handling unit and condensing unit shall be provided under Division 16.

Provide duct-mounted smoke detectors shown on the contract drawings and in coordination with Specification Section 16850 - Fire Alarm System and Div. 13 Fire Protection Systems. HVAC systems supplier and Contractor shall coordinate with the Fire Systems design to incorporate the required systems that are to be provided in accordance with Section 16850 and Div. 13 Fire Protection Systems. Air handling units fan shall shut down when smoke detector is activated.

B. HEADWORKS PROCESS EQUIPMENT AND WET WELL AREA:

1. SYSTEM DESCRIPTION: The headworks coarse screening, conveyor and dumpster area, wet well, fine screening area, pump area shall be ventilated and heated by Indirect Gas Fired Make-up Air units MAU-2121 and 2122. The air will be exhausted via exhaust fan F-2111 and odor controlled by carbon odor control unit ORT-2111.

2. OPERATION: The Make-up Air Units shall be controlled by a vendor supplied control panel. These units shall operate continuously. The odor control unit exhaust fan F-2111 shall be interlocked with the make up air units. The make-up air units shall be provided with flow switch and motor operated discharge damper. The discharge damper DPR-2121 shall be interlocked with the make-up air unit MAU-2121 and damper DPR-2122 shall be interlocked with the make-up air unit MAU-2122

682.

The local disconnect switch for the make-up air units shall be provided under Division 16.

C. MEMBRANE AREA:

1. SYSTEM DESCRIPTION: : The membrane area acetic acid room, chemical area, pump area, citric acid room will be continuously ventilated and heated by Direct Gas Fired make-up air unit MAU-2140. The exhaust air from acetic acid room will be odor controlled. The air from chemical and pump area will be exhausted by exhaust fan EF-2141. The air from the critic acid room will be exhausted via exhaust fan EF-2142. The membrane area plant water pump room will be ventilated via supply fan SF-2143 and exhausted by exhaust fan EF-2143.

2. OPERATION: The Make-up Air Units shall be controlled by a vendor supplied control panel. These units shall operate continuously. The heating shall be set at 50 deg F. The exhaust fans EF-2141 and EF-2142 shall be provided with H-O-A switch and AUTO mode the exhaust fans shall be interlocked with the make-up air unit MAU-2140. Controls shall be provided by the MAU's control panel. The motor operated discharge damper DPR-2140 shall be interlocked with MAU-2140.

The supply fan SF-2143 and exhaust fan EF-2143 shall be provided with H-O-A switch and in exhaust fan EF-2143 shall be interlocked with SF-2143 in AUTO mode. Controls shall be provided by the MAU's control panel.

Electric Unit Heater EUH-2143 shall be controlled by wall mounted thermostats. The thermostat shall be set at 50 degrees F for heating. The thermostats shall be furnished with the unit heaters under Section 15632.

Provide area smoke detectors as shown on the contract drawings.

The local disconnect switch for the air handling unit shall be provided under Division 16.

D. TREATMENT BUILDING OFFICE AREA:

1. SYSTEM DESCRIPTION: The Treatment Building office area shall be ventilated, heated and cooled by Air Handling Unit AHU-2151, gas duct heater GDH-2151, Condensing Unit CU-2151, rest room Exhaust Fans EF-2152 and EF-2153 and inline laboratory supply fan SF-2154 and laboratory exhaust fan EF-2154. Controls shall be provided by the MAU's control panel.

2. OPERATION: Air Handling Unit AHU-2151 shall be controlled by an automatic programmable wall mounted thermostat. The programmable thermostat shall include a fan "ON-AUTO" switch and system "HEAT-COOL-AUTO-OFF" switch. The thermostat shall be set at 72 degrees F for heating and 75 degrees F for cooling. In AUTO and COOL modes, when cooling is called for by the thermostat, Condensing Unit CU-2151 shall be energized. In AUTO and HEAT modes, when heating is called for by the thermostat, Gas Duct Heater GDH-2151 shall be energized. The thermostat shall be furnished with the air handling unit under Section 15850.

The Men's Restroom and Women's Restroom shall be exhausted by Exhaust Fans EF-2153 and EF-2152, respectively. The exhaust fans shall be provided with "H-O-A" switches. In AUTO mode, the exhaust fans shall be interlocked with AHU-2151.

The laboratory supply and exhaust fans shall be controlled by Variable frequency drives. Each fan shall be provided with H-O-A switch. Supply and exhaust fan shall operate at high speed when laboratory is occupied and operate at low speed when laboratory unoccupied. In Auto mode the exhaust fan shall be interlocked with the supply fan.

Duct-mounted smoke detector for the air handling unit shall be provided. Upon smoke detection, the unit shall shut down.

The local disconnect switch for the air handling unit shall be provided under Division 16.

1.05 SHIPMENT, PROTECTION AND STORAGE

The equipment shall be protected during shipment, handling, and storage as specified in Section 01605.

PART 2--PRODUCTS

2.01 MANUFACTURERS

The Owner and Engineer believe the following manufacturers are capable of producing equipment and/or products that will satisfy the requirements of the Section. This statement, however, shall not be construed as an endorsement of a particular manufacturer's products, nor shall it be construed that a named manufacture's standard equipment or products will comply

with the requirement of this Section. Manufacturer shall be Honeywell, Johnson, Siemens or Siebe.

2.02 GENERAL

HVAC contractor shall provide all control and power raceway systems and all control and power wiring for HVAC systems unless shown on the electrical drawings or specified under Division 16. If wiring requirements for vendor equipment items differ from those shown in these contract documents, provide required wiring and raceway.

All items of electrical equipment shall meet the requirements of Division 16. All raceway systems and wiring shall meet the requirements of Division 16.

2.03 SMOKE DETECTORS

Smoke detectors are specified in Section 16850and shown on the drawings

2.04 OPERATIONS SOFTWARE

The controls system manufacturer/installer shall provide one copy of all software including any associated licenses necessary for system operation and adjustment. All setpoints (after all testing, calibration, and adjustments have been completed) are to be provided.

2.05 PRODUCT DATA

The following information shall be provided in accordance with Section 01300:

1. Operation and maintenance information specified Section 01730.

PART 3--EXECUTION

3.01 INSTALLATION

Install the temperature control panel, thermostats, sensors, and devices as recommended by the manufacturer and as shown on the Drawings.

3.02 CALIBRATION AND ADJUSTMENTS

After completion of the installation, perform final calibrations and adjustments of the equipment provided and supply services incidental to the proper performance specified herein.

3.03 TESTING

After completion of installation, the controls shall be completely field tested and witnessed by the Engineer to ensure compliance with the performance requirements as specified.

3.04 TRAINING

Instruct the owner's designated representatives in these procedures during the start-up and test period. The duration of the instruction period shall be no less than 8 hours, during normal working hours. Training shall conform to Section 01660.

3.05 SEQUENCE OF OPERATION

Provide the sequence of operation specified in this Section.

END OF SECTION

SECTION 15990

HEATING, VENTILATING, AND AIR CONDITIONING SYSTEMS TESTING, ADJUSTING, AND BALANCING

PART 1—GENERAL

1.01 DESCRIPTION

This section specifies the labor and services necessary to test, adjust, and balance under actual operating conditions air systems design flow rates. Nothing herein shall be construed as relieving the contractor of his overall responsibility of this portion of the work.

1.02 QUALITY ASSURANCE

A. REFERENCES:

This section contains references to the following documents. They are a part of this section as specified and modified. Where a referenced document contains references to other standards, those documents are included as references under this section as if referenced directly. In the event of conflict between the requirements of this section and those of the listed documents, the requirements of this section shall prevail.

Unless otherwise specified, references to documents shall mean the documents in effect at the time of Advertisement for Bids or Invitation to Bid (or on the effective date of the Agreement if there were no Bids). If referenced documents have been discontinued by the issuing organization, references to those documents shall mean the replacement documents issued or otherwise identified by that organization or, if there are no replacement documents, the last version of the document before it was discontinued. Where document dates are given in the following listing, references to those documents shall mean the specific document version associated with that date, regardless of whether the document has been superseded by a version with a later date, discontinued or replaced.

Reference	Title
NEBB	Procedural Standards for Testing Adjusting and Balancing of Environmental Systems
AABC	National Standards for Total System Balance
ASHRAE 70	Standards--Methods of Testing for Rating the Air Flow Performance of Outlets and Inlets

B. TESTING AGENCY:

The Contractor shall procure the services of an independent air balancing and testing agency, belonging to the Associated Air Balance Council (AABC) or the National Environmental Balancing Bureau (NEBB), to perform air balancing, testing and adjustment of systems. The Contractor shall submit a copy of the National Project Certification Performance Guaranty, issued

to the testing agency by the AABC, as a part of the balancing report specified in paragraph 15990-2.01 B.

C. CODES AND STANDARDS:

The Contractor shall comply with applicable procedures and standards of the certification sponsoring association:

1. "National Standards for Field Measurements and Instrumentation, Total Systems Balance, Air Distribution-Hydronics Systems," AABC.

2. "Procedural Standards for Testing, Adjusting, and Balancing of Environmental Systems", NEBB.

3. "Method of Testing for Rating the Air Flow Performance of Outlets and Inlets," ASHRAE.

Calibration and maintenance of instruments and accuracy of measurements shall comply with the requirements of the standards.

1.03 SPECIAL REQUIREMENTS

Tests and adjustments shall include the complete testing and balancing of all heating, ventilating, and air conditioning systems and necessary adjustments to the heating, air conditioning, and ventilating equipment to accomplish the specified design flow rates.

Should any apparatus, material or work fail to meet the specified requirements in these tests, the Contractor shall make the necessary corrections and retest the apparatus, material, or work at no additional cost to the Owner.

1.04 BALANCING

A. GENERAL:

The Contractor shall review plans and specifications prior to testing and balancing the air systems. All ductwork shall be cleaned immediately prior to testing and balancing. The contractor shall submit a proposed approach and schedule for approval prior to the start of testing and balancing work. Characteristics to be tested and adjusted to conform to the values specified include the following:

1. Total airflow rates delivered by fans and air-handling units

2. Flow rates at all grilles, registers, diffusers, supply and exhaust and return ducts

3. Distribution patterns at air outlets

4. Capacity and temperature rise or drop across each heating and cooling coil

5. Operation and modulation of each control valve

B. AIRFLOW RATE MEASUREMENTS:

Airflow rates shall be obtained by adjustment of the fan speeds, dampers, or registers. All flow rates shall be measured with supply, return, and exhaust systems operating with heating and cooling coils wet, with filter bank resistance midway between the design values specified for clean and dirty filters, with auxiliary systems in operation and with all doors and windows closed.

Flow rates at grilles, registers, branch ductwork and air distribution patterns shall be tested in strict accordance with ASHRAE Standard-70.

1.05 SUBMITTALS

The following information shall be provided in accordance with Section 01300:

1. A copy of this specification section, with addendum updates included, and all referenced and applicable sections, with addendum updates included, with each paragraph check-marked to indicate specification compliance or marked to indicate requested deviations from specification requirements. Check marks (✓) shall denote full compliance with a paragraph as a whole. If deviations from the specifications are indicated, and therefore requested by the Contractor, each deviation shall be underlined and denoted by a number in the margin to the right of the identified paragraph. The remaining portions of the paragraph not underlined will signify compliance on the part of the Contractor with the specifications. The submittal shall be accompanied by a detailed, written justification for each deviation. Failure to include a copy of the marked-up specification sections, along with justification(s) for any requested deviations to the specification requirements, with the submittal shall be sufficient cause for rejection of the entire submittal with no further consideration.

2. A copy HVAC airflow schematics, and HVAC drawings with addendum updates that apply to the equipment in this section, marked to show specific changes necessary for the equipment.

3. Sample copy of each of the NEBB or AABC report forms.

4. Proposed approach and schedule of testing and balancing work as specified in paragraph 15990-1.04 A.

5. A description of each air system including equipment to be balanced.

PART 2—PRODUCTS

2.01 BALANCING REPORT

A. REPORT DATA:

The final certified balancing report shall include the following actual field-verified data:

1. Equipment data

   a. Manufacturer and model, size, arrangement, class, location, and equipment number.
   b. Motor horsepower, voltage, phase, and full load amperage.
   c. Fan cfm, static pressure, rpm, and operating motor BHP.

2. Duct size, supply or exhaust recorded cfm, velocity, pressure measurements, and location of all measurements.

3. Terminal units

   a. Manufacturer and model, supply or exhaust, location, and identification number.
   b. Recorded and design cfm.
   c. Recorded and design noise levels and velocities, where specified.

B. REPORT REQUIREMENTS:

1. Each individual final reporting form must bear the signature of the person who recorded the data and that of the supervisor of the reporting organization.
2. One certified organization shall perform the testing and balancing services.
3. All instruments that were used shall be listed and identified including the last date each was calibrated.

C. FINAL REPORT:

Final report shall be submitted prior to Contractor's request for final inspection. In addition to providing all specified data and information on applicable reporting forms, report shall include the following:

1. A schedule for testing and balancing parts of the systems which must be delayed due to seasonal, climatic, occupancy, or other conditions beyond control of the Contractor. Delayed work shall be completed as early as the proper conditions will allow, after consultation with the Engineer.

2. Due to delayed testing, reports shall be submitted after execution of those services.

3. A total balance report shall include the following components:

a. General Information and Summary
b. Instrument Calibration
c. Air Systems
d. Temperature Control Systems
e. Special Systems
f. Sound and Vibration Systems
g. Record drawings with specified and measured flow rates

2.02 CERTIFICATE OF COMPLETION

At completion of testing and balancing, Contractor shall submit a Certificate of Compliance stating that each apparatus, device, outlet, and system has been tested, adjusted, and balanced so that it is operating in conformance with manufacturer's recommendations and with the specified conditions.

2.03 PRODUCT DATA

The following information shall be provided in accordance with Section 01300:

1. The balancing report specified in paragraph 15990-2.01.

2. Documentation to confirm compliance with codes and standards.

3. NEBB or AABC certification.

PART 3—EXECUTION

3.01 GENERAL

The balancing agency shall conduct the above field tests in the presence of the Engineer.

Following completion of testing and balancing the system shall be left in proper working order, replacing belt guards, closing access doors, closing doors to electrical switch boxes, and restoring thermostats to specified settings.

3.02 PERFORMANCE OF WORK

A. AIR SYSTEMS:

1. GENERAL: Testing, adjusting, and balancing shall be performed after the system installation is complete but prior to acceptance of the project.

2. MEASUREMENTS: The Contractor shall perform the following:

a. Measure and adjust air supply and exhaust units to deliver at least 100 percent of the design air volume at 100 percent cooling.
b. Measure static air pressure conditions on fans, including filter and coil pressure drops, and total pressure across the fan.

c. Adjust fan speeds and motor drives within drive limitations, for required air volume. Set a speed to provide air volume farthest distance from the fan without excess static pressure. Check draw amps of fans on initial start-up. If running amps exceed nameplate, shut off motor immediately, notify Engineer, and make necessary drive changes as directed.

d. Evaluate building and room pressure conditions to determine adequate supply and return air conditions.

Airflow rates shall be measured with supply, return, and exhaust systems operating with heating and cooling coils wet, with filter bank resistance midway between design values specified for clean and dirty filters, with auxiliary systems in operation. The deflection pattern of supply outlets shall be adjusted to ensure uniform air distribution throughout the space served.

Airflow rates supplied, exhausted, or returned shall be within plus 5 percent of the design values specified.

3. SYSTEMS TO BE BALANCED: All systems described under Section 15951 briefly described below:

a. Pumping Station Wet Wells.
b. Headworks
c. Membrane Area
d. Administration Building
e. Odor control System
f. All HVAC and odor control system as specified and shown on the contact drawings.

3.03 FINAL INSPECTION

Following completion of testing and balancing, but prior to submitting the balancing report, the Contractor shall recheck, in the presence of the Engineer, random selections of data for air quantities, air motion, and sound levels recorded in the report. Points and areas for recheck shall be as selected by the Engineer. Measurement and test procedures shall be as approved for work forming basis of the report.

Selections for recheck will not exceed 25 percent of the total tabulated in the report, except for special air systems, as described in Section 15891, which may require 100 percent recheck for safety reasons.

In the event the report is rejected, all systems shall be readjusted and tested, new data recorded, new reports submitted, and new inspection test made.

Following acceptance of the reports by the Engineer, the Contractor shall permanently mark all damper positions, circuit balancing valves, and balancing valves so that they can be restored to their correct position if disturbed at any time. If a balancing device is provided with a memory stop, it shall be set and locked. Devices shall not be marked until after final inspection.

END OF SECTION

SECTION 16000

GENERAL REQUIREMENTS FOR ELECTRICAL WORK

PART 1--GENERAL

1.01 DESCRIPTION

A. SCOPE:

This section specifies general requirements for electrical work. Detailed requirements for specific electrical items are specified in other sections but are subject to the general requirements of this section. The electrical drawings and schedules included in this project manual are functional in nature and do not specify exact locations of equipment or equipment terminations.

B. DEFINITIONS:

1. ELEMENTARY OR SCHEMATIC DIAGRAM: A schematic (elementary) diagram shows, by means of graphic symbols, the electrical connections and functions of a specific circuit arrangement. The schematic diagram facilitates tracing the circuit and its functions without regard to the actual physical size, shape, or location of the component devices or parts.

2. ONE-LINE DIAGRAM: A one-line diagram shows by means of single lines and graphical symbols the course of an electrical circuit or system of circuits and the components, devices or parts used therein. Physical relationships are usually disregarded.

3. BLOCK DIAGRAM: A block diagram is a diagram of a system, instrument, computer, or program in which selected portions are represented by annotated boxes and interconnecting lines.

4. WIRING DIAGRAM OR CONNECTION SYSTEM: A wiring or connection diagram includes all of the devices in a system and shows their physical relationship to each other including terminals and interconnecting wiring in an assembly. This diagram shall be (a) in a form showing interconnecting wiring only by terminal designation (wireless diagram), or (b) a panel layout diagram showing the physical location of devices plus the elementary diagram.

5. INTERCONNECTION DIAGRAM: Interconnection diagrams shall show all external connections between terminals of equipment and outside points, such as motors and auxiliary devices. References shall be shown to all connection diagrams which interface to the interconnection diagrams. Interconnection diagrams shall be of the continuous line type. Bundled wires shall be shown as a single line with the direction of entry/exit of the individual wires clearly shown. Wireless diagrams and wire lists are not acceptable.

Each wire identification as actually installed shall be shown. The wire identification for each end of the same wire shall be identical. All devices and equipment shall be identified. Terminal blocks shall be shown as actually installed and identified in the equipment complete with individual terminal identification.

All jumpers, shielding and grounding termination details not shown on the equipment connection diagrams shall be shown on the interconnection diagrams. Wires or jumpers shown on the equipment connection diagrams shall not be shown again on the interconnection diagram. Signal and DC circuit polarities and wire pairs shall be shown. Spare wires and cables shall be shown.

6. ARRANGEMENT, LAYOUT, OR OUTLINE DRAWINGS: An arrangement, layout, or outline drawing is one which shows the physical space and mounting requirements of a piece of equipment. It may also indicate ventilation requirements and space provided for connections or the location to which connections are to be made.

1.02 QUALITY ASSURANCE

A. REFERENCES:

This section contains references to the following documents. They are a part of this section as specified and modified. Where a referenced document contains references to other standards, those documents are included as references under this section as if referenced directly. In the event of conflict between the requirements of this section and those of the listed documents, the requirements of this section shall prevail.

Unless otherwise specified, references to documents shall mean the documents in effect at the time of Advertisement for Bids or Invitation to Bid (or on the effective date of the Agreement if there were no Bids). If referenced documents have been discontinued by the issuing organization, references to those documents shall mean the replacement documents issued or otherwise identified by that organization or, if there are no replacement documents, the last version of the document before it was discontinued. Where document dates are given in the following listing, references to those documents shall mean the specific document version associated with that date, regardless of whether the document has been superseded by a version with a later date, discontinued or replaced.

Reference	Title
NECA-1	National Electrical Contractors Association – Standard Practices for Good Workmanship in Electrical Contracting
NFPA	National Fire Protection Association
NFPA-70	National Electrical Code (NEC)
NFPA-70E	National Electrical Safety Code (NESC)
ACI 318	Building Code Requirements for Structural Concrete

B. IDENTIFICATION OF LISTED PRODUCTS:

Electrical equipment and materials shall be listed for the purpose for which they are to be used, by an independent testing laboratory. Three such organizations are Underwriters Laboratories (UL), Canadian Standards Association (CSA), and Electrical Testing Laboratories (ETL). Independent testing laboratory shall be acceptable to the inspection authority having jurisdiction.

When a product is not available with a testing laboratory listing for the purpose for which it is to serve, the product may be required by the inspection authority, to undergo inspection at the manufacturer's place of assembly. All costs and expenses incurred for such inspections shall be included in the original contract price.

C. FACTORY TESTS:

Where specified in the individual product specification section, factory tests shall be performed at the place of fabrication and performed on completion of manufacture or assembly. The costs of factory tests shall be included in the contract price.

1.03 SUBMITTALS

The following submittals shall be provided in accordance with Section 01300:

1. A copy of this specification section, with addendum updates included, and all referenced and applicable sections, with addendum updates included, with each paragraph check-marked to indicate specification compliance or marked to indicate requested deviations from specification requirements. Check marks shall denote full compliance with a paragraph as a whole. If deviations from the specifications are indicated, and therefore requested by the Contractor, each deviation shall be underlined and denoted by a number in the margin to the right of the identified paragraph, referenced to a detailed written explanation of the reasons for requesting the deviation.

   The Construction Manager shall be the final authority for determining acceptability of requested deviations. The remaining portions of the paragraph not underlined will signify compliance on the part of the Contractor with the specifications.

   Failure to include a copy of the marked-up specification sections, along with justification(s) for any requested deviations to the specification requirements, with the submittal shall be sufficient cause for rejection of the entire submittal with no further consideration.

2. Catalog cuts of equipment, devices, and materials requested by the individual specification sections. Catalog information shall include technical specifications and application information, including ratings, range, weight, accuracy, etc. Catalog cuts shall be edited to show only the items, model numbers, and information which apply.

   Catalog cuts shall be assembled in a folder. Each folder shall contain a cover sheet, indexed by item, and cross-referenced to the appropriate specification paragraph.

3. Interconnection diagram: The Contractor shall prepare interconnection diagrams depicting all cable requirements together with their actual terminations as specified in paragraph 16000-1.01 B.

4. Conduit layout drawings indicating size, location, and support, for all conduits other than single runs of 1-inch diameter or less cast in concrete construction.

   a. Conduit layout drawings shall illustrate a system which conforms to the requirements of paragraph 16000-3.01-B.

   b. For layouts that do not conform to 16000-3.01 B, provide engineering design and calculations signed and sealed by a Professional Engineer registered in the state of the project. Engineering design and calculations shall demonstrate that the proposed layout does not impair or significantly reduce the design structural strength.

5. Safety disconnect switch list including legend with equipment tag, equipment description, and power feeder circuit source and location information.

1.04 DRAWINGS

Where the Contractor is required to provide information on drawings as part of the specified work, such drawings shall be prepared on 22-inch by 34-inch drafting media complete with borders and title blocks clearly identifying project name, equipment and the scope of the drawing.

Drawing quality and size of presentation shall be such as to permit 50 percent reduction of such drawings for insertion in operation and maintenance manuals.

1.05 PROJECT/SITE CONDITIONS

A. GENERAL:

Unless otherwise specified, equipment and materials shall be sized and derated for the ambient conditions specified in Section 01800, but not less than an ambient temperature of 40 degrees C at an elevation ranging from sea level to 3000 feet without exceeding the manufacturer's stated tolerances.

B. CORROSIVE AREAS:

The following areas are designated as corrosive:

1. All exterior areas, process areas and treatment basins shall be considered wet and corrosive.

C. HAZARDOUS (CLASSIFIED) AREAS:

The following areas are designated as hazardous (classified) in accordance with the NEC:

Area	Hazardous Classification

Area	Hazardous Classification
Influent Pumping Station Wet Well	Class 1, Div. 2
Headworks Area	Class 1, Div. 2
Membrane Tanks	Class 1, Div. 2
Biological Treatment Basins	Class 1, Div. 1
Acetic Acid Room	Class 1, Div. 2
Odor Control Systems	Class 1, Div. 2
Membrane Pumping Station Wet Well	Class 1, Div. 1
Drain Pumping Station Wet Well	Class 1, Div. 1

D. SEISMIC:

Electrical equipment, supports, and anchorage shall be designed and installed in accordance with the seismic design requirements specified in Section 01900.

E. DEMOLITION:

There will be demolition work required on this project. Electrical Contractor shall coordinate with the General Contractor to de-energize the necessary equipment as needed. Abandoned conduits that are stubbed up through existing concrete structures that will cause a tripping hazard will be required to be cut and capped flush to the finished floor surface. Removing or plugging of abandoned conduits will be required. All power and control wiring for abandoned equipment shall be removed.

All existing electrical and controls equipment/materials shall be demolished in coordination with construction sequencing and phasing for the project. No existing distribution, controls, conduits or cables are to be reused. This project includes all new electrical and controls construction. Existing switchgear, motor control centers, panelboards, disconnects, control panels, junction boxes, lights, light poles, electrical equipment pads, foundations, conduit and cable are to be demolished by the Contractor. Contractor shall reference the Civil Site plans for the identification of structures to be demolished. All electrical, lighting and controls associated with these structures is to be demolished. Demolition shall also include the removal of all equipment as previously described on existing structures that are to remain in place.

F. FIRE RATED CONSTRUCTION

Contractor shall reference architectural and mechanical plans to coordinate and identify fire rated construction. Electrical means and methods shall maintain all fire rated areas as shown on the drawings. See applicable specifications for further details.

1.06 STORAGE OF MATERIALS AND EQUIPMENT

Materials and equipment shall be stored as specified in paragraph 01605-3.0 E. Equipment and materials to be located indoors shall be stored indoors and sealed with plastic film wrap.

1.07 ELECTRICAL NUMBERING SYSTEMS

A. RACEWAY NUMBERS:

Raceways shall be tagged at all terminations. Contractor shall assign raceway numbers in accordance with the following system where raceway numbers have not been assigned:

Raceway Prefix	Type of Function
C	Control or power - 120V or less
H	Power above 600V
N	Pneumatic tubing
P	Power 208V to 600V
S	Signal - data communication or instrumentation
X	Spare

Prefixes shall be followed by a 4-digit number. Add a letter suffix to distinguish the raceways where more than one raceway is routed to a particular piece of equipment. Example:

Raceway number = P3109A where:
- P = conduit contains power
- 3109 = unique 4-digit number
- A = letter to distinguish raceways to same equipment

B. CONDUCTOR NUMBERS:

Conductors shall be identified with numbers at both ends. Conductor tag numbers shall consist of the equipment number followed by a dash followed by the conductor number specified on the control diagram. Example:

Equipment Tag number = 1900 - L1 where:
- 1900 = cable number
- L1 = conductor number

Conductors in parallel or in series between equipment shall have the same conductor number. Neutral conductors shall have the same conductor number. Wherever possible, the conductor number shall be the same as the equipment terminal to which it connects.

Where factory-wired equipment has terminal numbers different than the conductor numbers shown on the control diagrams:

1. Both shall be shown on the interconnection diagram.
2. Include a copy of the interconnection diagram inside of the equipment cabinet.

1.08 INDICATING LAMP COLORS

Refer to Section 16175 – Miscellaneous Electrical Devices or to Section 16176 – Local Control Panels for indicating lights colors for process and electrical equipment.

1.09 ARC FLASH MITIGATION METHODS

The following mitigation method requirements shall apply to all power distribution and utilization equipment supplied for any products supplied on the project and applies to all equipment divisions in the Contract Documents. Refer to the NFPA-70 (NEC), and NFPA-70E (NESC) for equipment labeling requirements.

A. EQUIPMENT LABELS:

Equipment labels shall be installed on the outside of the electrical equipment enclosure, cabinet, and panels to avoid opening the equipment to access the manufacture's data or the equipment ratings.

B. HINGED DOORS:

Power distribution equipment shall have hinged rear doors where back access is shown.

C. REMOTE RACKING DEVICES:

Power distribution equipment shall have remote racking devices for Operators to insert or remove rack-mounted breakers, rack-mounted devices, or auxiliary equipment drawers into the associated equipment location.

D. INSULATED POWER BUS AND INSULATED CABLE BOOTS:

Provide insulated power bus in power distribution equipment where accessible to installers or maintenance workers.

Provide cable boots for power conductor connections to insulate the exposed power conductor connections.

E. VIEW WINDOWS FOR MONITORING: NOT USED

F. POWER AND CONTROL EQUIPMENT SEPARATION:

Provide separation between power equipment within an enclosure, cabinet, or panel by the uses of barriers, separate access doors, or by other means.

Provide separation barriers between main breaker feeders coming into equipment and other termination points or bussing on the load side of the main breaker.

G. AUTOMATIC SHUTTERS:

Provide automatic shutters, where possible, to close the access to the power bus when a power device is not engaged.

H. CONTACT WITH LIVE PARTS:

All electrical equipment shall be provided with covers, shields or enclosures to prevent contact with live parts.

PART 2--PRODUCTS

2.01 EQUIPMENT AND MATERIALS

A. GENERAL:

Equipment and materials shall be new and free from defects. All material and equipment of the same or a similar type shall be of the same manufacturer throughout the work. Standard production materials shall be used wherever possible.

B. MISCELLANEOUS WIRING AND CONDUIT

The Contractor shall include in the base bid the following miscellaneous wiring, including installation costs. (Assume all conduit to be exposed at elevations up to 20 feet above finished floor or finished grade and include all necessary pullboxes, supports, etc.):

1. 1,000 feet of 5 #12 AWG in 3/4” PVC coated GRS conduit.
2. 1,000 feet of 7#14 AWG in 3/4” PVC coated GRS conduit.
3. 1,000 feet of 2#16 STP in 3/4” PVC coated GRS conduit.

B. EQUIPMENT FINISH:

Unless otherwise specified, electrical equipment shall be painted by the manufacturer as specified in Section 09900 - Coating Systems.

C. GALVANIZING:

Where specified, galvanizing shall be in accordance with Section 05910.

2.02 WIRE MARKERS

Each power and control conductor shall be identified at each terminal to which it is connected. Conductors size No. 10 AWG or smaller shall have identification sleeves. Conductors No. 8 AWG and larger shall use cable markers of the locking tab type. Tabs shall be white plastic with conductor identification number permanently embossed.

Conductors shall be identified in accordance with paragraph 16000-1.07 B. Adhesive strips are not acceptable.

The letters and numbers that identify each wire shall be machine printed on sleeves with permanent black ink with figures 1/8 inch high. Sleeves shall be yellow or white tubing and sized to fit the conductor insulation. Shrink the sleeves with hot air after installation to fit the conductor.

Conductor and Wire Marker Manufacture:

1. TMS Thermofit Marker System by Raychem Co
2. Sleeve style wire marking system by W. H. Brady Co.
3. or equal.

2.03 RACEWAY MARKERS

Raceway markers tags shall be:

1. Solid brass with 0.036-inch minimum thickness.

2. Raceway number stamped in 3/16-inch minimum height characters.

3. Attached to the raceway with 316 stainless steel wire.

2.04 NAMEPLATES

Nameplates shall be made from laminated phenolic plastic.

1. Nominal size: 3/4 inch high by 2 inches long.

2. Black backgrounds with 3/16-inch white letters.

3. Fastened using self-tapping stainless steel screws.

Abbreviations shall be submitted to the Construction Manager prior to manufacture because of space limitations. Nameplate adhesives will not be permitted on the outside of enclosures.

2.05 TERMINAL BLOCKS

Unless otherwise specified, terminal blocks shall be panhead strap screw type. Terminals shall be provided with integral marking strips that permanently identify with the connecting wire numbers as shown on the drawings:

1. Terminal blocks for P-circuits (power 208-600 volts)

    a. Rated not less than the conductor current rating
    b. Rated less than 600 volts AC.

2. Terminal blocks for C-circuits and S-circuits:

   a. Rated not less than 20 amperes
   b. Rated less than 600 volts AC.

3. Terminals shall be tin-plated.

4. Insulating material shall be nylon.

2.06 ELECTRICAL SAFETY MATTING

Switchboard matting shall be provided for added protection of operations staff and workers to cover concrete surfaces in front of electrical equipment.

1. Matting shall meet ASTM D-178 specifications for manufacture of Type II, Class 2: ¼" thickness matting.

2. Flame and oil resistant tested per ASTM standards.

3. ASTM certification engraved or stamped on the back surface of the matt.

4. Matting shall be tested and certified for industrial use. Matt rolls shall be proof testing over the entire surface at 20,000 VAC, and a dielectric test voltage of 30,000 VAC.

5. The Contractor shall provide matting in the electrical room in front of all electrical enclosures.

6. The Contractor shall provide matting in the front of all interior control panels.

7. The Contractor shall provide matting at all exterior electrical distribution equipment, power and control panels.

8. Single piece rolls are preferred to be used in front of long sections of electrical equipment including, but not limited to, switchboards, switchgear, motor control centers, panelboards and control panels.

9. Matting shall be a minimum of 48" wide corrugated black for interior areas and diamond plate surface for exterior areas.

2.07 PRODUCT DATA

The following information and product data specified under individual specification sections shall be provided in accordance with Section 01300.

1. Applicable operation and maintenance information on an item-by-item basis in accordance with Section 01730. Operation and maintenance information shall be provided at the time of equipment, device, or material site delivery,

or at a certain stage of project completion as required by Section 01730, whichever is the earlier. Full-size drawings shall be reduced to 11 x 17 inches.

2. Test results for motors and electrical systems on the forms specified in Section 16030. A file of the original test results shall be maintained by the Contractor. Prior to acceptance of work, the resulting file shall be provided to the Construction Manager.

3. Description of functional checkout procedures specified under paragraph 16000-3.02 C shall be provided 30 days prior to performing functional checkout tests.

4. Record documents specified in Section 01720 and paragraph 16000-3.03.

PART 3--EXECUTION

3.01 GENERAL

A. CONSTRUCTION:

The work under Division 16 shall be performed in accordance with these specifications.

Refer to the National Electrical Contractors Association's (NECA) National Electrical Installation Standards (NEIS) for Standard Practices for Good Workmanship in Electrical Contracting (NECA-1) as a minimum baseline of quality and workmanship for installing electrical products and systems that defines what is meant by "neat and workmanlike" as required by the National Electrical Code Section 110-12. Specified requirements supersede NECA practices.

Electrical layout drawings are diagrammatic, unless otherwise detailed or dimensioned. The Contractor shall coordinate the location of electrical material or equipment with the work. In general, conduit routing is not shown on the Drawings. Conduit routings and stub-up locations that are shown are approximate. The Contractor is responsible for routing all conduits including those shown on electrical and instrumentation one-line diagrams, risers and home runs shown on floor plans. The Contractor shall coordinate conductor and conduit quantities; conduit routings and stub-up locations with approved equipment submittals, other trades and field conditions.

This project includes several packaged systems for process, security and HVAC system. It also includes performance type specifications. Specific equipment, devices and controls vary depending on the Supplier/Vender of these systems. The Contractor shall install and wire all equipment and controls; including packaged systems, and perform all tests necessary to assure conformance to the Drawings and Specifications and ensure that the equipment is ready and safe for energization. The Contractor shall account for these systems variances in the bid. Additional conduit and cable is required to be provided as a part of these specification requirements that is not shown on the drawings. The Contractor shall review these specifications and include conduit, cable and ancillary materials as required for these systems.

Major electrical openings may compromise the structural integrity of the slab and wall

elements. Major electrical openings are defined as openings or penetrations greater than two times the wall thickness in any dimension, and include duct bank transitions into a building through structural elements. Major electrical openings shall be constructed according to standard details on the drawings, up to an opening dimension of three feet. For opening dimensions greater than three feet, construct walls and slabs as specifically detailed on the drawings for that case. Major electrical openings proposed by the Contractor shall be submitted to the Structural Engineer of Record for the project for review.

Minor changes in location of electrical material or equipment made prior to installation shall be made at no cost to the Owner.

B. CONDUITS IN CONCRETE CONSTRUCTION:

Conduits for power, control and instrumentation may be embedded in and pass through concrete construction subject to the limitations in this paragraph and provided conduit is installed as described in these specification and shown on structural and electrical details. Where concrete strength or serviceability requirements prevent the direct embedment of conduit, provide adequate support, bracing, and serviceability details:

1. Concrete strength shall not be impaired significantly by the embedment of conduits in or through structural sections.

2. Conduit layout shall conform to the requirements of ACI 318, Sections 3.3 – Aggregates and 6.3 – Conduits and Pipes Embedded in Concrete.

3. Conduits shall be treated similarly to reinforcing steel for purposes of clearance. In general, code sections require conduit spacing the greater of:

   a. 1.33 times the maximum concrete aggregate size, clear

   b. Three diameters center to center

   Alternate spacing and layout shall be as reviewed and accepted by the Engineer.

4. Conduit and raceway penetrations through walls and slabs where:

   a. one side is a conditioned or an occupied space and the other side not, or

   b. one side has liquid or groundwater contact and the other not,

   shall be detailed and constructed to prevent liquid and moisture penetration through the wall or slab section for each conduit.

C. HOUSEKEEPING:

Electrical equipment shall be protected from dust, water and damage. Motor control centers, switchgear, and buses shall be wiped free of dust and dirt, kept dry, and shall be vacuumed on the inside within 30 days of acceptance of the work.

Before final acceptance, the Contractor shall touch up any scratches on equipment as specified in paragraph 09900-3.03 H.

Electrical equipment temporarily exposed to weather, debris, liquids, or damage during construction shall be protected as specified in paragraph 01605-3.0 F.

D. ELECTRICAL EQUIPMENT LABELING:

Electrical equipment shall have NFPA 70E labels installed stating the results of the Arc Flash analysis specified in Section 16431 Short Circuit and Protective Device Coordination Study Report.

Identification and warning signs shall be provided in all locations as required by the NEC. Including, but not limited to:

1. Arc-Flash hazard warning. Electrical equipment shall have field marked signs and labeling to warn qualified persons of the potential electric arc flash hazards per NEC Article 110.16 Flash Protection.

2. Electrical distribution equipment and utilization equipment shall be field labeled to identify the power source and the load as specified. Refer to NEC Article 110.22 for Identification of Disconnecting Means installation criteria. Specific information is required such as the equipment tag number and equipment description of both the power source and the load equipment.

3. Warning signs shall be provided at each entrance to the electrical room or building in accordance with NEC 110.27(C).

4. All switchboards and panelboards supplied by a feeder shall be marked to indicate where the power supply source is located as required by NEC 408.3(F) and 408.4(A & B).

5. Emergency Systems NEC 700.7(B) and 701.7(B).

E. SAFETY DISCONNECT SWITCHES:

Heavy duty fused and non-fused disconnect switches with current range of 30 to 600 amperes shall be provided as shown on the drawings with the enclosure type matching the area rating. Provide lock-off provision for a hasp padlock. Provide shielded or insulated line terminals with quick-make / quick-break switch operator. Provide internal barrier kit for additional personnel barrier from accidental contacts with live parts. Provide a legend plate with equipment tag, equipment description, and power feeder circuit source and location identification.

Disconnects shall include one auxiliary contact that operates with the power switch blades. The auxiliary contact shall be wired as shown on the drawings for remote status monitoring of the disconnect position where shown, for equipment shutdown or for disconnecting motor space heater where shown.

Fuse clips shall be Class R rejection type and sized for UL Class R, one-time, time-delay fuses. Fuse assembly shall have a minimum short circuit capacity of 100,000 amps symmetrical. Provide fuses as shown and one set of spare fuses with each switch.

F. MOTOR CONNECTIONS:

Verify that the motors are purchased with the correct size motor termination boxes for the circuit content specified as shown on the power single line diagrams or submit custom fabrication drawing indicating proposed motor termination box material, size, gasket, termination kit, grounding terminal, motor lead connection method, and motor terminal box connection/support system. Verify the motor termination box location prior to raceway rough-in.

G. CONDUCTOR INSTALLATION:

An enclosure containing disconnecting means, overcurrent devices, or electrical equipment shall not be used as a wireway or raceway for conductors not terminating within the enclosure. Provide wireways, raceways, termination boxes, or junction boxes external to the enclosure for the other conductors.

3.02 TESTING

A. GENERAL:

Prior to energizing the electrical circuits, insulation resistance measurements tests shall be performed using a 1000-volt megohmmeter to verify the conductor is acceptable for use on the project. The test measurements shall be recorded on the specified forms and provided in accordance with paragraph 16000-1.03.

B. INSULATION RESISTANCE MEASUREMENTS:

1. GENERAL: Insulation resistance measurements shall be made on conductors and energized parts of electrical equipment. Minimum acceptable values of insulation resistance shall be in accordance with the applicable ICEA, NEMA or ANSI standards for the equipment or material being tested, unless otherwise specified. The ambient temperature at which insulation resistance is measured shall be recorded on the test form.

Insulation resistance measurements shall be recorded in a format similar to Form 16000-A, contained in Section 01999. Insulation with resistance of less than 10 megohms is not acceptable.

2. CONDUCTOR AND CABLE TESTS: The phase-to-ground insulation resistance shall be measured for all circuits rated 120 volts and above except lighting circuits. Measurements may be made with motors and other equipment connected. Solid state equipment

shall be disconnected, unless the equipment is normally tested by the manufacturer at voltages in excess of 1000 volts DC.

3. MOTOR TESTS: The Installed Motor Test Form, 16000-B, specified in Section 01999, shall be completed for each motor after installation.

Motors shall have their insulation resistance measured before they are connected. Motors 50 HP and larger shall have their insulation resistance measured at the time of delivery as well as when they are connected. Insulation resistance values less than 10 megohms are not acceptable.

C. PRE-FUNCTIONAL TEST CHECKOUT:

Functional testing shall be performed in accordance with the requirements of Section 16030. Prior to functional testing, all protective devices shall be adjusted and made operative.

1. Submit a description of the proposed functional test procedures prior to the performance of functional checkout.

2. Prior to energization of equipment, perform a functional checkout of the control circuit. Checkout:
   a. Energizing each control circuit.
   b. Operating each control device, alarm device, or monitoring device.
   c. Operate each interlock to verify that the specified action occurs.

Verify motors are connected to rotate in the correct direction. Verification may be accomplished by momentarily energizing the motor, provided the Contractor confirms that neither the motor nor the driven equipment will be damaged by reverse operation or momentary energization.

3.03 RECORD DOCUMENTS

Contract documents shall be maintained and annotated by the Contractor during construction, including the record drawings specified in Section 01720 and the following additional schedules, lists, and drawings:

1. Interconnection Diagrams (16000, Part 2)

2. Original Submittal Drawings (16000, Part 1)

END OF SECTION

SECTION 16030

ELECTRICAL ACCEPTANCE TESTING

PART 1--GENERAL

1.01 DESCRIPTION

A. SCOPE:

The electrical equipment and conductors to be tested are specified herein and shown on the electrical drawings of the Contract Documents.

The Contractor shall retain an independent InterNational Electrical Testing Association (NETA) member Engineering and Testing Firm (Testing Firm) for specified on-site acceptance testing of the project electrical power distribution system and utilization equipment covered by this contract.

The Testing Firm shall be responsible for the Short Circuit and Protective Device Coordination Report as specified in Section 16431. The Testing Firm shall verify the protective device settings are implemented in accordance with Section 16431. The Testing Firm work includes the ARC-Fault equipment labeling work as specified in Section 16431.

Tests performed by the Testing Firm shall be witnessed by the Owner's Representative. Provide the Engineer 30-day advanced notice for Testing Firm tests. Insulation tests by the Contractor typically will not be witnessed. Critical equipment witness testing may be requested by the Engineer.

The manufacturer of the electrical equipment supplied for the project shall complete their on-site factory inspection, testing, and setup prior to the Testing Firm's Acceptance Testing and subsequent Protective Device setting verification work. The power monitors shall be set up by the factory representatives and power monitor readings and settings verified by the Testing Firm. Manufacturer work is specified in the respective equipment sections.

The Installation Contractor shall test motors, conductors, and equipment as specified and shown. Contractor shall provide the labor, tools, material, including quality power sources required by the Testing Firm equipment, and other services necessary to provide specified tests and retesting.

Submit proposed electrical test procedures for tests to be performed by the Installing Contractor, other than insulation resistance testing, and proposed test procedures for tests to be performed by the Testing Firm.

1.02 QUALITY ASSURANCE

A. REFERENCES:

This section contains references to the following documents. They are a part of this section as specified and modified. Where a referenced document contains references to other standards, those documents are included as references under this section as if referenced directly. In the event of conflict between the requirements of this section and those of the listed documents, the requirements of this section shall prevail.

Unless otherwise specified, references to documents shall mean the documents in effect at the time of Advertisement for Bids or Invitation to Bid (or on the effective date of the Agreement if there were no Bids). If referenced documents have been discontinued by the issuing organization, references to those documents shall mean the replacement documents issued or otherwise identified by that organization or, if there are no replacement documents, the last version of the document before it was discontinued. Where document dates are given in the following listing, references to those documents shall mean the specific document version associated with that date, regardless of whether the document has been superseded by a version with a later date, discontinued or replaced.

Reference	Title
ANSI/NETA ATS	International Electrical Testing Association (NETA) - Standard for Acceptance Testing Specifications for Electrical Power Equipment and Systems

B. TESTING FIRM:

The Testing Firm and their proposed project team shall possess the following minimum qualifications:

1. Testing Firm shall be an independent testing organization providing unbiased testing authority, professionally independent of the manufacturers, suppliers, and installers of equipment or systems to be evaluated.

2. Testing Firm shall be regularly engaged in the testing of electrical equipment, devices, installations, and systems.

3. Testing Firm shall be a “NETA Accredited Company” of the InterNational Electrical Testing Association (NETA providing testing in accordance with ANSI/NETA ATS published specifications or the pre-approved firms that use the NETA methods and published testing specifications.

4. If firm's own published testing specifications are proposed, then submit a copy to the Engineer for acceptance and submit the qualifications of the testing staff.

5. Testing Firm's lead technical person shall be currently certified by NETA or the National Institute for Certification in Engineering Technologies (NICET) in electrical power distribution systems testing. Submit proof of technical training and certification for performing testing work.

6. Testing Firm's technicians shall be regularly employed, qualified testing staff.

C. TESTING FIRM QUALIFICATIONS:

For any Testing Firm, the Contractor shall receive Engineer approval of the proposed Testing Firm, their proposed project team, and their test procedures prior to the Pre-Test Submittals.

1. Project Team: Identify lead technical person and testing staff and provide documentation of training and experience demonstrating compliance with the qualifications specified.

2. Testing Firm: Provide reference names and current phone numbers of the Owner, Contractor, or Engineer that has knowledge of the Firm’s work:

   a. Three projects for Owner completed within the past 4 years, or

   b. Three projects for Brown and Caldwell completed within the past 4 years, or

   c. Provide references for five recent projects that were completed within the last 4 years. Provide a description of the scope of the referenced project.

3. For Testing Firm’s experience to be judged acceptable, the Contractor shall demonstrate that the proposed Testing Firm's reference projects are of similar scope and size to this project, and in performing these projects the following has been achieved:

   a. Testing Firm's work did not delay the projects or adversely impact the progress of the Contractor's work or the Owner's project.

   b. Specified requirements were achieved.

   c. Work was performed in accordance with ANSI/NETA ATS, MTS, or other Engineer accepted testing criteria.

   d. Submittals approved with two or fewer re-submittals after the initial submittal.

   e. No warranty claims related to the Testing Firm's work.

4. Provide documentation demonstrating NETA Accreditation and compliance with the qualification specified.

1.03 SUBMITTALS

Contractor shall submit the following information in accordance with specification Section 01300:

A. TESTING FIRM QUALIFICATIONS:

For any Testing Firm not pre-qualified per paragraph 1.02 B, submit qualifications per paragraph 1.02 C.

B. PRE-TEST SUBMITTALS:

1. Description or samples of specified test procedures.

2. Sample test report forms for the specified tests.

3. Preliminary Schedule listing equipment to be tested.

4. Notification form for the work scheduled.

5. Pre-Functional test procedures and testing schedule.

6. Functional test procedures and testing schedule.

C. POST-TEST SUBMITTALS:

1. Completed Section 01999-Test Records:

a. Wire and Cable Resistance Test Data Form: 16000-A

b. Installed Motor Test Form: 16000-B

c. Dry Transformer Test Data Form: 16000-C

d. Motor Control Center Test Form: 16000-D

e. Protective Relay Test Form: 16000-G

f. Low Voltage Switchgear Test Form: 16000-H

g. Loop Wiring and Insulation Resistance Test Data Form: 17000-A

h. Controller Calibration Test Data Form: 17000-C

i. Panel Indicator Calibration Test Data Form: 17000-D

j. Field Switch Calibration Test Data Form: 17000-G

k. Transmitter Calibration Test Data Form: 17000-H

l. Miscellaneous Instrument Calibration Test Data Form: 17000-I

m. Individual Loop Test Data Form: 17000-J

n. Loop Commissioning Test Data Form: 17000-K

2. Test Reports specified in Part 3 of this Section.

PART 2--PRODUCTS

2.01 TESTING EQUIPMENT AND INSTRUMENTS

The test equipment, instruments and devices used for testing shall be calibrated to test equipment standards with references traceable to the National Institute of Standards and Technology.

The test equipment, instruments and devices shall have current calibration stickers indicating date of calibration, deviation from standard, name of calibration laboratory and technician, and date of next recalibration.

PART 3--EXECUTION

3.01 GENERAL

The Contractor shall submit a schedule for the Testing Firm work and notify the Engineer 30 days prior to commencement of any witnessed testing.

The required tests, including correction of defects where found, and subsequent retesting, shall be completed prior to energizing electrical distribution system, utilization systems, and conductors and completed prior to functional testing. The installation of the protective device, breaker, and relay settings shall be completed and verified.

3.02 INSTALLATION CONTRACTOR TESTING

A. GENERAL:

Submit all completed test report forms in a 3-ring binder type notebook at the project Substantial Completion date.

B. INSULATION RESISTANCE MEASUREMENTS:

1. TESTS: Insulation resistance measurements shall be made on conductors and electrical equipment that will carry current. Where not specified, the minimum acceptable values of insulation resistance shall be in accordance with the applicable NETA-ATS, ICEA, NEMA, or ANSI standards for the equipment or material being tested.

The ambient temperature at which insulation resistance is measured shall be recorded on the test form. A megohmmeter shall be used for insulation resistance measurements.

Refer to specification Section 01999-Reference Forms for the test forms required to document the testing performed by the Installing Contractor.

2. CONDUCTOR AND CABLE TESTS: The phase-to-ground insulation resistance shall be measured for circuits 120 volts and above except lighting circuits. Measurements may be made with motors and other load equipment connected. Insulation resistance measurements shall be recorded on Form 16000-A contained in Section 01999, and submitted. Insulation with resistance of less than 100 megohms is not acceptable.

3. MOTOR TESTS: The Installed Motor Test Form, 16000-B, contained in Section 01999, shall be completed for each motor after installation and submitted. All motors shall have their insulation resistance measured before they are connected.

Motors 50 HP and larger shall have their insulation resistance measured at the time of delivery and when they are connected. Insulation resistance values less than 50 megohms are not acceptable.

Verify that motors are connected to rotate in the correct direction with the load disconnected. Verification may be accomplished by momentarily energizing the motor, provided the Contractor confirms that neither the motor nor the driven equipment will be damaged by reverse operation.

Motor running current shall be measured on each phase with the motor operating under load. Current imbalance shall be less than 5-percent difference between phases.

C. POWER DISTRIBUTION EQUIPMENT:

Transformers, panelboards, and other power distribution equipment shall have their insulation resistance measured phase-to-phase and phase-to-ground. Insulation resistance values less than 10 megohms are not acceptable.

D. POWER UTILIZATION EQUIPMENT:

Test receptacles and power outlets using a device to verify polarity, grounding, and the correct wiring connections.

E. SIGNAL AND DATA CABLE TESTS:

Signal conductors and shield drain shall be tested for insulation resistance with the other conductors in the cable grounded. Each shield drain conductor shall be tested for continuity. Insulation resistance measurements shall be recorded on Form 17000-A contained in Section 01999, and submitted.

Instruments used for continuity measurements shall have a resolution of 0.1 ohms and an accuracy of better than 0.1 percent of reading plus 0.3 ohms. A 500-volt or 1000-volt meg-ohmmeter shall be used for insulation resistance measurements as appropriate.

F. PRE-FUNCTIONAL CHECKOUT:

Prior to energizing equipment, the Contractor shall perform a pre-functional checkout of the power and the control circuit. Protective devices shall be installed and available for service and calibrated or adjusted with specified setpoints installed. Contractor selected initial setpoints shall be installed and recorded, when specified setpoints are not required from the manufacturer or the Engineer.

Contractor shall submit a description of proposed test and checkout procedures conforming to the following requirements, including a schedule for conducting these procedures, not less than 30 days prior to the performance of pre-functional testing.

Pre-functional checkout shall consist of energizing each control circuit and operating each control device, protective device, monitoring or alarm device, and each interlock and verify the specified action or response occurs. Coordinate testing with the requirements specified in Section 01660 – Equipment and System Performance and Operational Testing.

G. FUNCTIONAL TESTING:

Contractor shall submit a description of proposed functional test and checkout procedures conforming to the following requirements, including a schedule for conducting these procedures, not less than 30 days prior to the performance of functional testing.

Prior to functional testing, all protective devices shall be adjusted and made operative. Prior to energization of associated equipment, perform a functional checkout of all electrical and instrumentation control circuits as specified in the following and in Division 17. Checkout shall consist of energizing each control circuit and operating each control, alarm, safety device, and each interlock, in turn, to verify that the specified action occurs.

Record and submit data sheets as specified. Coordinate testing with the requirements specified in Section 01660 – Equipment and System Performance and Operational Testing.

3.03 TESTING FIRM ACCEPTANCE TESTING REQUIREMENTS

A. ACCEPTANCE TEST REPORTS:

The Contractor shall maintain a written record of all inspection and test results and, upon completion of the project, shall assemble and certify a final test report

A copy of the preliminary test results shall be provided to the Engineer at the end of each day of testing.

Furnish two copies of the complete acceptance testing final report to the Engineer at Substantial Completion of the project.

B. ACCEPTANCE TEST DOCUMENTATION:

The Contractor shall submit test documentation forms and a detailed description of the proposed inspection and test procedures to be performed by the Testing Firm. Testing shall not commence until the Engineer has approved the proposed forms and procedures.

The description shall identify the test equipment required for each specified test to be performed. Test report forms shall include the following information:

1. Electrical equipment description.
2. Electrical equipment identification number.
3. Electrical equipment nameplate data.
4. Electrical equipment settings.
5. Time and date of test.
6. Ambient conditions at time of test.
7. Inspection checklist and results.
8. Test results.
9. Test equipment used with manufacture, model number, and calibration date.
10. Remarks about test procedures, results, and suggestions.
11. Name and signature of testing personnel.
12. Name and signature of test witness.

C. ACCEPTANCE TESTING FIRM TESTS:

Acceptance testing procedures and test results shall be as specified in ANSI/NETA ATS. The following types of equipment and systems shall be inspected and tested by the Testing Firm. Acceptance testing work shall not be limited to equipment shown on the drawings. Refer to Division 16 specification for the electrical equipment specified.

Refer to the electrical drawings for location and identification of the electrical distribution system equipment, utilization equipment, and electrical conductors, included but not limited to:

1. Switchgear and Switchboard Assemblies.
2. Transformers Dry-Type Air-Cooled.
3. Transformers Liquid Filled.
4. Cables Low-Voltage 600 Volt Maximum.
5. Circuit Breakers Low-Voltage, 100A frame and larger.
6. Protective Relays.
7. Instrument Transformers.
8. Metering, include non-utility power metering equipment.
9. Grounding Systems include installed grounding systems and existing grounding systems that are being utilized.
10. Ground Fault Protection Systems.
11. Motors.
12. Motor Starters Low-Voltage.
13. Motor Control Centers Low-Voltage.
14. Adjustable Speed Drive Systems and harmonic testing per Section 11069-3.02.
15. Surge Protection Devices, include lightning arresters, surge capacitors, and TVSS.
16. Engine Generators.
17. Uninterruptible Power Systems (UPS).

3.04 ACCEPTANCE TEST VALUES

Minimum acceptable test values shall be as specified in ANSI/NETA ATS. Where acceptance test values are not specified, the equipment manufacturer's recommended test values shall be used. Where acceptance test values are not specified and the equipment manufacturers recommended test values are not available, request acceptance test values from the Engineer.

3.05 ACCEPTANCE TEST FINAL REPORT

Test report shall be assembled as described in ANSI/NETA ATS. Test results shall be organized by electrical distribution system equipment, project utilization equipment, and electrical conductors with individual tab dividers with labels to identify each group of items and cross-referenced to the Contract Documents. The equipment description, equipment number, and equipment tag number shall be used as shown on the drawings or listed in specifications.

Final Test Reports that are illogically assembled, labeled, and organized shall be returned for rework at no cost to the Owner and resubmitted in an acceptable format.

Deficiencies and non-compliant test results found during acceptance testing shall be identified in the test report and cover letter. The Testing Firm shall certify in the final test report that all deficiencies and non-compliant test results listed have been “corrected” and shall include a description of the resolution for each problem listed.

3.06 PROTECTIVE DEVICE FIELD SETTINGS

The Testing Firm shall verify, and certify in the acceptance test final report, that the protective device coordination study settings for new and existing equipment based on the Short Circuit and Protective Device Coordination Report specified in Section 16431 have been implemented and recorded on the Testing Firm’s Data Sheets.

3.07 ARC FLASH STUDY RESULTS

The Testing Firm shall provide and install labels on the project electrical equipment for personnel protective clothing requirements as specified in Section 16431.

END OF SECTION

SECTION 16110

RACEWAYS, BOXES, AND SUPPORTS

PART 1--GENERAL

1.01 SCOPE

This section covers the furnishing and installation of electrical conduits, wireways, pull boxes, manholes, handholes, cable trays, fittings and supports. Raceways shall be provided for lighting, receptacles, power, control, instrumentation, signaling and grounding systems.

1.02 REFERENCES

This section contains references to the following documents. They are a part of this section as specified and modified. Where a referenced document contains references to other standards, those documents are included as references under this section as if referenced directly. In the event of conflict between the requirements of this section and those of the listed documents, the requirements of this section shall prevail.

Unless otherwise specified, references to documents shall mean the documents in effect at the time of Advertisement for Bids or Invitation to Bid (or on the effective date of the Agreement if there were no Bids). If referenced documents have been discontinued by the issuing organization, references to those documents shall mean the replacement documents issued or otherwise identified by that organization or, if there are no replacement documents, the last version of the document before it was discontinued. Where document dates are given in the following listing, references to those documents shall mean the specific document version associated with that date, regardless of whether the document has been superseded by a version with a later date, discontinued or replaced.

Reference	Title
ANSI C80.1	Rigid Steel Conduit-Zinc Coated
ANSI C80.3	Electrical Metallic Tubing-Zinc Coated
ASTM F512	Smooth-Wall Polyvinylchloride Conduit and Fittings for Underground Installation
FEDSPEC WW-C-581E	Conduit, Metal, Rigid and Intermediate; and Coupling, Elbow, and Nipple, Electrical Conduit; Zinc Coated
FEDSPEC W-C-1094A	Conduit and Conduit Fittings, Plastic, Rigid
JIC EMP-1	Electrical Standards for Mass Production Equipment
NEMA ICS 6	Industrial Control and Systems Enclosures
NEMA TC2	Electrical Plastic Tubing (EPT) and Conduit (EPC 40 and EPC 80)
NEMA TC6	PVC and ABS Plastic Utilities Duct for Underground Installation
NEMA VE1	Cable Tray Systems

NEMA 250	Enclosures for Electrical Equipment (1000 volts maximum)
NFPA 70	National Electrical Code (NEC)
NFPA 79	Electrical Standards for Industrial Machinery
IBC	International Building Code
UL 1	Flexible Metal Electrical Conduit
UL 6	Rigid Metal Electrical Conduit
UL 360	Liquid Tight Flexible Electrical Conduit
UL 514	Nonmetallic Outlet Boxes, Flush-Device Boxes and Covers
UL 651	Rigid Nonmetal Electrical Conduit
UL 797	Electrical Metallic Tubing
UL 870	Wireways, Auxiliary Gutters, and Associated Fittings
UL 884	Underfloor Raceways and Fittings
UL 886	Outlet Boxes and Fittings for Hazardous (Classified) Locations

1.03 SUBMITTALS

The following information shall be provided in accordance with Section 01300:

1. A copy of this specification section, with addendum updates included, and all referenced and applicable sections, with addendum updates included, with each paragraph check-marked to indicate specification compliance or marked to indicate requested deviations from specification requirements.

   A check mark shall denote full compliance with a paragraph as a whole. If deviations from the specifications are indicated, and therefore requested by the Contractor, each deviation shall be underlined and denoted by a number in the margin to the right of the identified paragraph, referenced to a detailed written explanation of the reasons for requesting the deviation. The Engineer shall be the final authority for determining acceptability of requested deviations. The remaining portions of the paragraph not underlined will signify compliance on the part of the Contractor with the specifications. *Failure to include a copy of the marked-up specification sections, along with justification(s) for any requested deviations to the specification requirements, with the submittal shall be sufficient cause for rejection of the entire submittal with no further consideration.*

2. Manufacturer's descriptive literature for materials.

3. Certification that Contractor has been trained to work on PVC-coated conduit systems.

4. Detailed conduit routing drawings for conduit proposed to be installed in and/or under concrete slabs. Contractor shall reference these specifications, electrical and structural details for requirements.

PART 2--PRODUCTS

2.01 RACEWAYS AND FITTINGS

General requirements for raceway materials specified in this section are listed in the RACESPECS sheets at the end of this section. The type of raceways and raceway fittings to be used for any given area and application shall conform to the requirements in this section.

2.02 BOXES, GUTTERS, TERMINAL CABINETS, MANHOLES, AND HANDHOLES

Provide Type 316L (low carbon), 317, or Type 316 stainless products where specified. Enclosure constructed of mild sheet steel shall be hot-dipped galvanized after fabrication. Hinges shall be continuous type and for NEMA-4X cabinets hinges shall be stainless steel.

Table A specifies the electrical enclosure material and rating for the location and application.

Table A

Location	Electrical Enclosure Material and NEMA Rating
Indoor: Architecturally Finished Area	NEMA 1: mild steel
Indoor: Electrical Room	NEMA 1: mild steel
Indoor: Process Areas	NEMA 4X: Stainless Steel
Indoor: Corrosive Area	NEMA 4X: Stainless Steel
Outdoor: Corrosive Area	NEMA 4X: Stainless Steel
Outdoor: Non-Corrosive Areas	NEMA 4X: Stainless Steel
Corrosive Area (Hypochlorite)	NEMA 4X: Fiberglass
Corrosive Area (Polymer)	NEMA 4X: Stainless Steel
Hazardous Area: Class I Division 2	NEMA 4X: Stainless Steel
Hazardous Area: Class I Division 1	NEMA 7: Galvanized Malleable Iron or Aluminum

A. PULL BOXES AND WIRING GUTTERS:

Indoor boxes and enclosures larger than FD boxes shall be constructed of sheet steel and galvanized after fabrication. Outdoor boxes and enclosures shall be provided with neoprene gaskets on the hinged doors or removable covers constructed of stainless steel. Box and gutter sizes, metal thickness, and grounding shall comply with the National Electrical Code. Bolt-on junction box covers 3 feet square or larger, or heavier than 25 pounds, shall have a rigid handle. Covers larger than 3 x 4 feet shall be split.

B. TERMINAL CABINETS:

Terminal cabinets shall be provided with adjustable terminal strip mounting, back-panels for equipment mounting, print pockets in the doors, continuous door hinges, and three-point lockable latches. Terminal cabinets located indoors shall be NEMA 12. Terminal cabinets located outdoors and in corrosive areas shall be modified NEMA 4X with stainless steel door hinge, three-point latch, and filtered ventilation, if required. Terminal block shall conform to Section 16000.

C. MANHOLES:

Unless otherwise specified, manholes shall be precast concrete, 3000 psi strength at 28 days, with reinforcing with the manhole cover designed for H 20 bridge loading. Necking and shaft shall have 36 inch minimum clear opening.

Manhole dimensions shall be as shown on the drawings and where not shown shall be sized in accordance with the NEC. Manhole cover and frame shall be Class 30B gray cast iron per ASTM A48 with machine finished flat bearing surfaces. Manhole covers shall be engraved "ELECTRICAL".

Manholes shall be watertight. Exterior walls of manholes shall be provided with 6 mils of waterproof membrane, Sonneborn HLM 5000 Series, or equal. Manhole walls shall be provided with boxouts with waterstops on all sides of each boxout. Waterstops shall be as specified in the Cast-in-Place Concrete section.

Raceway duct entries shall be no less than 14 inches above floor and below ceiling. Raceway boxouts shall be sized to accommodate the penetrating underground duct banks. Raceways bell-ends shall be flush with the interior finished manhole wall. From each duct bank entry into the manhole, the continuous duct bank bare copper grounding conductor shall be supported and routed around the interior manhole walls and bonded together.

Floor shall slope to a sump pit with dimensions shown in the manhole detail or with a minimum of 18 inch length x 18 inch width x 12 inches depth.

D. HANDHOLES:

Handholes shall be precast concrete with checker plate, galvanized, traffic covers designed for H 20 loading. Handholes shall be provided with precast solid concrete slab bottoms with sumps. Handholes shall be constructed of 3000 psi reinforced concrete. Handhole cover shall be engraved "ELECTRICAL" or "SIGNAL" as applicable.

Dimensions shall be as specified on the drawings. Handhole walls shall be provided with boxouts, as specified for manholes.

E. MANHOLE AND HANDHOLE CABLE SUPPORTS:

Provide heavy-duty, non-metal cable racks for support of conductors. Racks shall be UL listed glass-reinforced nylon consisting of slotted wall brackets for support arms designed for a minimum of a 400-pound load. Each support bracket shall from the top to the bottom and the

arms shall be adjustable and installed on 24-inch centers. Use ½-inch stainless steel bolts, hardware, inserts, and fasteners. Cables supports, clamps or racks shall be provided to support the cable at minimum 2 foot intervals. Concrete inserts shall be embedded on 24-inch centers in walls and ceiling.

Cable Support Products or equal:

1. Underground Devices Incorporated Type RA arms with CR36 support brackets.

2. Unistrut Power-Rack F20N-STA33 Stanchions with F20N-ARM14 Arms.

F. GROUND BUS:

Provide a ground bus in concrete manholes, handholes, and electrical pullboxes with dimension of 3-foot width x 3-foot length x 3-foot depth and larger. Provide a NEMA threaded 4-hole grounding plate for connecting two to four-1-hole ground connectors that enter the enclosure from two to four duct banks. Products: Burndy, T&B, or equal.

2.03 RACEWAY SUPPORTS

A. CONDUIT SUPPORTS:

Framing channel with end caps and straps shall be provided to support groups of conduit. Individual conduit supports shall be one-hole pipe straps used with clamp backs and nesting backs where required. Material as specified herein.

Conduit supports for PVC coated rigid steel and PVC conduit systems shall be one-hole PVC coated rigid steel clamps or oversized stainless steel clamps.

B. CEILING HANGERS:

Ceiling hangers shall be adjustable steel rod hangers and fittings. Provide J-Type conduit support for single conduit. Straps or hangers of plumber's perforated tape are not acceptable. Unless otherwise shown, hanger rods shall meet ASTM A193 and be sized as 3/8-inch up to 2-inch conduit and shall be 1/2 inch all-thread rod over 2-inch conduit. Material as specified herein.

C. SUSPENDED RACEWAY SUPPORTS AND RACKS:

Suspended raceway supports shall consist of concrete inserts, steel rod hangers, and jamb nuts supporting framing channel or lay-in pipe hangers as required. Framing channel shall be a minimum of 12-gauge. Material as specified herein.

Hanger rods shall be 1/2-inch diameter all-thread rod and shall meet ASTM A193. Suspended raceway supports and racks shall be braced for seismic forces as specified in Section 16000.

D. MATERIALS:

Table B specifies the type of raceway supports required for each location and application.

Table B

Location	Framing Channel	Threaded Rod, Hardware, & Fittings
Indoor, Architecturally finished Area	Steel, HDG	Steel, HDG
Indoor, Electrical Room	Steel, HDG	Steel, HDG
Indoor, Process Areas	Stainless Steel	Stainless Steel
Corrosive Area (hypochlorite area)	Fiberglass or PVC	Fiberglass or PVC
Corrosive Area (polymer area)	Stainless Steel	Stainless Steel
Indoor, Corrosive Area (general)	Stainless Steel	Stainless Steel
Outdoor, Corrosive Area (general)	Stainless Steel	Stainless Steel
Outdoor Areas, Non-corrosive	Stainless Steel	Stainless Steel

HDG = Hot Dip Galvanized Finish.
PVC = PVC COATED.

2.04 CONCRETE ENCASED DUCT BANKS

Concrete used for duct banks shall be Class E with red color added and a minimum 28-day compressive strength of 2,000 psi as specified in the Cast-in-Place Concrete Section 03300.

2.05 UNDERGROUND MARKING TAPE

Underground detectable marking tape shall be for early warning protection of digging around direct buried cables, conduits, and concrete duct banks. Tape shall be OSHA approved.

Marking tape example: Low density polyethylene plastic, nominally 6 inches wide and 4 mil thickness with metallic lined tape with red polyethylene film on top and clear polyethylene film on the bottom. Tape shall be imprinted with a warning continuously along the length similar to: "CAUTION - STOP DIGGING - BURIED ELECTRIC LINE BELOW."

Tape Products: Brady "Identoline"; Services and Materials "Buried Underground Tape"; Somerset (Thomas & Betts) "Protect-A-Line"; or equal.

2.06 NAMEPLATES

Nameplates shall be provided for boxes in accordance with the requirements of Section 16000. Nameplate wording shall be as shown on the drawings. Provide the functional description of the device on the nameplate, where wording is not specified

2.07 FIRESTOPS

Firestops and seals shall be Flamemastic 77, Vimasco No. 1-A, or equal, and shall be applied in accordance with manufacturer's recommendations. Products which are affected by water are not acceptable.

2.08 RACEWAY IDENTIFICATION

Raceway number tags shall conform to the requirements of raceway markers, Section 16000.

2.09 ELECTRICAL SEALANT

Electrical sealant putty shall be non-hardening, non-oxidizing, non-corrosive, non-poisonous, and non-injurious to human skin with service temperature range of 30 to 200 degrees Fahrenheit. Product shall be used to seal against the entrance of water.

2.10 HAZARDOUS AREA AND CORROSIVE AREA CONDUIT SEALS

Sealing compound shall be non-hardening type for corrosive areas. Seal fittings for conduit systems in hazardous atmosphere locations shall be hot-dip galvanized cast ferrous alloy or aluminum alloy. Seal fittings shall be 40-percent fill type.

Sealing compound shall be hard type installed in UL listed for explosion-proof sealing fittings after the conductors are installed, tested, and accepted.

Provide PVC-coated seal fittings used for PVC-coated conduit with 40-mil factory coating. Seal fitting and sealing compound manufacture: Appleton, Crouse-Hinds, or equal.

2.11 PULLING LINE

Pulling line shall be polyethylene type, mildew and rot resistant with minimum of 200-pound tensile strength and minimum 1/4-inch diameter. Install in all “future” raceways. Manufacture: Greenlee, Ideal, or equal.

2.12 CONDUIT THREAD LUBRICANT

Thread lubricant shall be conductive with anti-seize and anti-corrosion properties, compatible with steel and aluminum conduit materials. Manufacture: T&B CP8 KOPR-Shield; Robroy Threadcompound; or equal.

PART 3--EXECUTION

3.01 GENERAL

Table C specifies the type of raceway required for each location and application by RACESPEC sheet. Unscheduled conduit shall be galvanized, rigid steel, RACESPEC type GRS.

Table C

Location	Application/Condition	RACESPEC
Indoor noncorrosive	Exposed	GRS
Indoor corrosive	Exposed	PGRS or RAC
Outdoor	Exposed	PGRS or RAC
Concealed	Power circuits embedded in concrete structure or beneath slab-on-grade	PVC4
Concealed	Instrumentation, communications and data signals encased in concrete, duct bank	PVC4
Concealed	Analog signals	PGRS
Underground	Power circuits encased in concrete, duct bank	PVC4
Underground	Instrumentation, communications and data signals directly buried	PVC4
Underground	Analog signals	PGRS
Nonhazardous	Final connection to equipment and light fixtures	LFS
Hazardous corrosive	Exposed	PGRS
Hazardous	Final connection to equipment	XPFS
Architecturally finished areas	Concealed in framed walls and ceiling spaces (lighting and receptacle circuits only)	EMT
Architecturally finished areas	Final connection to light fixtures	FLEX

3.02 CONDUIT

A. GENERAL:

The conduit systems, installation, and hazardous location fittings are specified herein. In general, conduit routing is not shown on the Drawings. The Contractor is responsible for routing all conduits including those shown on the electrical and instrumentation one-line diagrams; conduit systems required by security, HVAC, lightning protection systems and homeruns shown on floor plans. Contractor shall verify conduit quantities and locations for conduits with approved equipment submittals prior to installation; including quantities in duct banks.

Conduit routings and stub-up locations that are shown are approximate; exact routing to be as required for equipment furnished and field conditions. Conduit routing shall be surface-mounted except where shown on the Drawings or where approved by the Engineer. Approval will require detailed routing drawings to be submitted and approved by the Engineer prior to installation. Conduits routed in slabs shall meet the requirements of these specifications and details as shown on the Drawings; including structural details.

Contractor shall protect all through-penetrations and membrane penetrations at fire-resistance-rated wall assemblies and horizontal assemblies. The fire-resistance rating of all penetrations shall not be less than the required fire resistnace ratings. Provide U.L. approved through-penetraion firestop systems. Contractor shall reference architectural plans and specifications to identify fire rated contruction requirements.

B. INDOOR AND OUTDOOR CONDUIT SYSTEMS:

In general, Contractor shall be responsible for determining conduit routing, wireways, junction boxes, termination cabinets and required fittings that conform to the specified installation requirements:

1. Conduits for lighting and outlets: concealed in finished areas; exposed in process areas.

2. Conduits for process equipment: exposed

3. Conduit inside structures: exposed or concealed underneath slab on grade in duct banks

4. Conduit concealed inside water chambers slabs and walls

Conduit installation shall conform to the requirements of the RACESPEC sheets and the following specified installation requirements:

1. Exposed conduit: Install parallel or perpendicular to structural members and surfaces. Install conduit horizontally and allow minimum headroom of 7 feet.

2. Route two or more exposed conduits in the same general routing parallel with symmetrical bends.

3. Space exposed conduit installed on supports not more than 10 feet apart. Space multiple conduits in parallel and use framing channel.

4. Comply with the requirements of Section 16000 and herein, where conduits are suspended from the ceiling.

5. Secure conduit rack supports to concrete walls and ceilings with cast-in-place anchors or framing channel concrete inserts.

6. Install conduits at least 6 inches from high temperature piping, ducts, and flues with temperatures higher than 90 degree C.

7. Install conduits between the reinforcing steel in walls or slabs that have reinforcing in both faces. See electrical and structure layout details for requirements. Conduits larger than 1” shall not be installed in slabs or walls.

8. Place conduits under the reinforcement in slabs with only a single layer of reinforcing steel. Separation between conduits, conduits and reinforcement, and conduits and surfaces of concrete shall be maintained in accordance with UBC. See electrical and structure layout details for requirements. Conduits larger than 1” shall not be installed in slabs or walls.

9. Route conduit clear of structural openings and indicated future openings.

10. Provide conduits with flashed and watertight seals routed through roofs or metal walls.

11. Grout conduits into openings cut into concrete and masonry structures. All conduits entering and exiting rooms with min. fire ratings shall be sealed to maintain the fire rating of the room.

12. Cap conduits or plug flush conduits during construction to prevent entrance of dirt, trash, and water. Cap or plug empty conduits designated as “future”, “spare”, or “empty” and include a pulling line accessible at both ends. Use anti-seize compound on cap and plug threads prior to installation.

13. Determine concealed conduit stubup locations from the manufacturer's shop drawings. Terminate concealed conduit for future use in specified equipment.

14. Install conduit flush with structural surfaces with galvanized couplings and plugs. Caps and plugs shall match the conduit system.

15. Provide concealed portions of conduits for future equipment where the drawings indicate future equipment. Match the existing installation for duplicate equipment.

16. Terminate conduits that enter enclosures with fittings that match the NEMA rating of the enclosure.

17. Underground metallic or nonmetallic conduit that turn out of concrete, masonry or earth: Install a 90-degree elbow of PVC-coated rigid steel conduit before emergence above ground.

18. Provide O-Z Gedney "Type DX" or Crouse-Hinds "Type XD" bonded, weathertight expansion and deflection fitting for the conduit size where conduit across structural joints that allows structural movement.

C. UNDERGROUND CONDUIT SYSTEM:

Excavation, backfilling, and concrete work shall conform to respective sections of these specifications. Underground conduit shall conform to the following requirements:

1. Underground conduits shall be reinforced concrete encased that are not shown otherwise on the drawings.

2. Concrete encased conduit shall have minimum concrete thicknesses of 2 inches between conduits, 1 inch between conduit and reinforcing, and 3 inches between reinforcing and earth, unless shown otherwise in an electrical detail.

3. Concrete encasement on exposed outdoor conduit risers shall continue to 3 inches above grade, with top crowned and edges chamfered.

4. Underground conduit bend radius shall be not less than 2 feet minimum at vertical risers and shall be not less than 3 feet elsewhere.

5. Where conduit and concrete encasement are terminated underground, the conduit and reinforcing shall both extend at least 2 feet past the concrete. Conduits shall be capped and threads protected. Steel surfaces shall be given two coats of epoxy paint.

6. Underground conduits and conduit banks shall have 2 feet minimum earth cover unless otherwise shown.

7. Underground conduit banks through building walls shall be cast-in-place or installed with concrete into boxouts with waterstops on all sides of the boxout. Water-stops shall be as specified in the Cast-in-Place Concrete section. Extend the horizontal reinforcement from the duct bank into the boxout terminating with J-hook bends.

8. Conduits not encased in concrete and passing through walls with one side in contact with earth shall be sealed watertight with special rubber gasketed sleeve and joint assemblies or with sleeves and modular rubber sealing elements.

9. Thoroughly swab conduits and raceways on the inside, immediately upon completion of pouring concrete.

10. Label raceways in accordance with Section 16000.

11. After the concrete has set and before backfilling, pull a mandrel through each conduit. The mandrel shall have a diameter equal to the nominal conduit inside diameter minus 1/2 inch and shall not be less than 4 inches long.

12. If the mandrel showed signs of protrusions on the inside of the conduit, the conduit shall be repaired or replaced.

13. Provide manufactured plastic conduit spacers anchored to prevent movement during the concrete pour. Manufacture: Carlon, PW Pipe, Underground Devices, or equal.

14. Form the concrete pour ten feet from the wall, manhole, or handhole and form to allow for future conduit entry.

15. Backfill duct banks with clean fill compacted to 90-percent in 6-inch lifts after concrete has cured. Refer to Section 03300 for concrete requirements including minimum 7 days of cure time prior to backfill over duct banks.

16. Allow and provide for two offsets per conduit and raceway for each 100-linear feet to account for unexpected field conditions including for excavation and backfill limited to three feet of extra width and/or depth. Include these specified provisions in the bid price.

17. Provide PVC threaded adapter with female threads where PVC conduit is joined to steel conduit. Procedure:

    a. Before assembly: Double coat steel conduit with Red-Robroy, Green-Permacote, Blue-Ocal or equal product.

    b. After assembly: Seal with 65-mil thick, 2-inch wide mastic sealing tape to ½-inch beyond threads. Procucts: 3M Scotch 2228; Plymouth 02625; or equal.

    c. Cover with 20-mil corrosion protection tape applied in ½-lap layers to 2-inch beyond threads. Products: 3M Scotchwrap 51; Plymouth Plywrap 12; or equal.

18. Where reinforced concrete duct banks enter the side of a building, manhole, or handhole and the reinforcement cannot be brought into a window and be terminated, then drill the structure and embed the reinforcement in epoxy to minimum of 3-inches depth.

19. Provide PVC conduit with bell ends where duct banks terminated at walls, manholes, or handholes. Install bell ends flush with finished concrete.

20. Provide PVC conduit with bell ends where conduit rise below grade into a floor mounted electrical panel, electrical cabinet, MCC, switchboard, or switchgear.

21. Separate power conduits from signal conduit within the same ductbank by 12” or greater separation, as shown. Refer to the drawings or schedules for signal to be installed in metal conduits instead of PVC ducts.

22. Separate high voltage ductbanks from low voltage ductbanks, as shown.

23. Provide wireways for transition from underslab conduits rising into wall-mounted panels where the number of conduits exceed the NEC allowable panel space in the bottom of the panel. Provide conduit sleeves or fitting for panel transition. Continuous thread or all-thread is prohibited.

D. CONDUIT IN BLOCK WALLS:

Install multiple runs of conduit that stub-up into a block wall and connect to recessed electrical panels with adequate space for the conduit. Coordinated the electrical work with the structural work and block installers to provide a chase to install the conduit. Install conduit in the cells that do not contain structural reinforcement. Install conduits in the center of the cell to avoid affecting the structural integrity of the wall.

Avoid conduit and electrical boxes installation that blocks the cell from being grouted or that blocks the cell reinforcing bars from being grouted. Avoid conduit in the first cell adjacent to doors, windows, corners and wall intersections and install conduits in the center of the first available cell a minimum of 1’-0” from the edge of these openings.

Where solid grouting of masonry walls is specified, install conduit and electrical boxes so as to provide sufficient space for grout to flow pass the boxes and conduit in order to fully fill the space beneath and behind. Where boxes need to be held in place, secure the boxes from the face of the block wall. Do not place items behind or next to electrical boxes to hold in place.

Coordinate split-face, slump and scored block installation with the masonry contractor to supply smooth face block at the location of receptacles and switches so that the device covers install flush to the wall. Install translucent weather-proof sealing material under device covers on outdoor or wet area locations.

E. CONDUIT SEAL-OFF FITTINGS:

Conduits passing:

1. Between Class I, Division 1 area and Class I, Division 2 area; provide sealing fittings located at the boundary in accordance with NEC Article-500.

2. From hazardous or corrosive area into a non-hazardous or non-corrosive area.

Install the seal-off material in the conduit seal-off fittings after inspection.

F. CONDUIT AND INNERDUCT SEALING MATERIAL:

Provide HYDRA-SEAL® Handi-Polyurethane-Foam or equal product to seal conduits and inner ducts.

Sealing product required features:

1. Compatible with common cable jacket materials.
2. ASTM E-84 flame spread requirements and UL Classified.
3. Pre-pressurized, portable, one-component closed-cell foam sealing system.
4. Dries tack-free within 15 minutes and cures within 24 hours.
5. Reacts with applied moisture or with ambient humidity.
6. Remove over-spray with acetone and remove cured foam mechanically

Application Criteria:

1. Apply in ambient temperatures between 60° to 100° F.
2. Apply bead onto clean surface.

3.03 MANHOLES AND HANDHOLES

Unless otherwise specified, manhole and handhole installation shall be as follows:

1. Manholes, handholes, and pull boxes shall be set on a minimum of 6 inches of crushed rock on top of undisturbed or compacted earth.

2. Manholes and handholes shall be set plumb so that water shall drain to the sump.

3. Manhole covers shall be 36-inches in diameter and set at 2 inches above finish grade with surrounding pavement sloping away from the manhole cover.

4. Metallic hardware inside manholes and handholes shall be bonded to the ground plate or ground bus using bolted connections, bonding jumpers and grounding bushings.

3.04 CABLE TRAY – NOT USED

3.05 RACEWAY NUMBERING

Each new and reused conduit shall be provided with a number tag at each end and in each manhole, handhole, or pull box. Cable trays shall be identified by stencils at intervals not exceeding 50 feet, at intersections, and at each end to identify power cable tray voltage, control cable tray, or instrument cable tray.

3.06 RACEWAY SCHEDULE

A. GENERAL:

Raceways are scheduled on the drawings and shall be provided as specified on the drawings, if not shown on the drawings, then size in accordance with NFPA 70 and as specified herein.

B. UNSCHEDULED RACEWAY:

Unscheduled lighting and receptacle raceways shall be sized by the Contractor in accordance with the NEC. Minimum size shall be 3/4 inch for exposed and 1 inch for embedded raceway.

The number and size of communication, paging, fire alarm, and security raceways shall be as required for the particular equipment provided subject to the minimum sizes specified herein.

C. SCHEDULED RACEWAY:

The size and type of raceway shall be as specified on the drawings.

3.07 RACESPEC SHEETS

The following RACESPECS are included in this section:

3.07 RACEWAY SPECIFICATION SHEETS (RACESPEC)

Raceway Identification:	EMT
Description:	Electrical Metallic Tubing
Compliance:	ANSI and UL
Finish:	Electro-galvanized steel
Minimum size:	3/4 inch
Fittings:	Compression type. Fittings inside concrete block (CMU) walls: Concrete-tight.
Boxes:	Electro-galvanized sheet steel.
	NEMA Class 1 stamped or form-bent steel with screw covers.

3.07 RACEWAY SPECIFICATION SHEETS (RACESPEC)

Raceway Identification:	FLEX
Description:	Flexible Steel Conduit
Application:	Final connection to equipment subject to vibration or adjustment.
Compliance:	UL 1
Construction:	Spirally wound galvanized steel strip with successive convolutions securely interlocked.
Minimum size:	1/2 inch
Fittings:	Compression type
Other:	FLEX shall be provided with an internal ground wire.

3.07 RACEWAY SPECIFICATION SHEETS (RACESPEC)

Raceway Identification:	GRS
Description:	Galvanized Rigid Steel Conduit (GRS)
Compliance:	ANSI and UL
Finish:	Hot-dip galvanized after fabrication, inside and outside. Smooth finished surfaces.
Manufacturers:	Allied Tube and Conduit Corp., Wheatland Tube Co., or equal.
Minimum size:	Unless otherwise specified, 3/4 inch for exposed, 1 inch for embedded, encased, or otherwise inaccessible.
Fittings:	
Locknuts, Rings, Hubs:	Hot-dip galvanized insulated throat with bonding locknut or ring,. The hubs shall utilize a neoprene "O" ring and provide a watertight connection. O-Z Gedney, CHM-XXT, or equal
Unions:	Electro-galvanized ferrous alloy type Appleton UNF or UNY, Crouse-Hinds UNF or UNY, or equal. Threadless fittings are not acceptable.
Conduit Bodies:	Oversized conduit bodies: Ferrous alloy type with screw taps for fastening covers to match the conduit system. Gaskets shall be made of neoprene.
Boxes:	
Indoor:	Type FD cast ferrous for all device boxes and for junction boxes less than 6 inches square.
Outdoor:	Type FD cast ferrous for all device boxes and for junction boxes less than 6 inches square.

3.07 RACEWAY SPECIFICATION SHEETS (RACESPEC)

Raceway Identification:	GRS (continued)
Corrosive:	NEMA 4X stainless steel or nonmetallic, as specified.
Hazardous:	NEMA Class 7 cast ferrous.
Elbows:	
(3/4" thru 1-1/2")	Factory fabricated or field bent.
(2" thru 6")	Factory fabricated only.
Conduit Bodies (Oversized):	
(3/4" thru 4")	Malleable iron, hot-dip galvanized, unless otherwise noted. Neoprene gaskets for all access plates. Tapered threads for conduit entrances.
(5" and 6")	Electro-galvanized iron or cast iron box.
Expansion Fittings:	Expansion fittings in embedded runs shall be watertight with an internal bonding jumper. The expansion material shall be neoprene allowing for 3/4-inch movement in any direction.
Manufacturers:	Appleton, Crouse-Hinds, Hubbell, O. Z. Gedney, or equal.
Installation:	Rigid steel conduit shall be made up tight and with conductive thread compound. Joints shall be made with standard couplings or threaded unions. Steel conduit shall be supported away from the structures using hot-dip galvanized malleable iron straps with nesting backs or framing channel. Conduit entering boxes shall be terminated with a threaded hub with a grounding bushing. Exposed male threads on rigid steel conduit shall be coated with zinc-rich paint.

3.07 RACEWAY SPECIFICATION SHEETS (RACESPEC)

Raceway Identification:	RAC
Description:	Rigid Aluminum Conduit
Materials:	Conduit and fittings: 6063 aluminum alloy with temper designation T-1.
Compliance:	ANSI and UL
Finish:	Smooth finished outside and inside surfaces.
Manufacturers:	Alcoa, Allied Tube and Conduit Corp., Wheatland Tube Co., or equal.
Application /Conditions:	Indoors, corrosive and non-corrosive areas Outdoors, non-corrosive and non-process areas. Rigid aluminum conduit shall not be installed in concrete, direct buried, or where exposed to severe corrosion, or where exposed to physical damage.
Minimum size:	Unless otherwise specified, 3/4 inch for exposed, 1 inch for inaccessible.
Fittings:	Locknuts: stainless steel. Bushings: non-corrosive cast aluminum alloy, stainless steel, or nonmetallic. Bushings: insulating collar. Grounding bushings: locking type with a feed-through compression lug for securing the ground cables. Threadless fittings: not acceptable.
Manufacturers:	Thomas & Betts, O.Z. Gedney, Crouse–Hinds or equal.
Expansion Fittings:	Expansion fittings shall be watertight with an internal bonding jumper. The expansion material shall be neoprene and shall allow for 3/4-inch movement in any direction.
Manufacturers:	Appleton, Crouse-Hinds, Hubbell, O. Z. Gedney, or equal.

3.07 RACEWAY SPECIFICATION SHEETS (RACESPEC)

Raceway Identification:	RAC (continued)
Hubs:	Hubs: threaded non-corrosive cast aluminum alloy with powdered epoxy finish for connection of conduit to junction, device, or terminal boxes. Hubs: insulating bushings with bonding locknut. Hubs: neoprene "O" ring for a watertight connection.
Manufacturers:	O-Z Gedney, CHM-XXT, or equal
Unions:	Unions shall be non-ferrous alloy type.
Manufacturers:	Appleton UNF or UNY, Crouse-Hinds UNF or UNY, or equal.
Boxes:	
Indoor:	Type FD cast aluminum with powdered epoxy finish for device boxes and junction boxes with a dimension less than 6 inches for the longest side. NEMA Class 12 welded aluminum with threaded hubs with a dimension of 6 inches for the longest side and larger. Boxes in wet locations: PVC coated.
Outdoor:	Type FD, PVC coated, cast aluminum for device boxes and junction boxes with a dimension of less than 6 inches for the longest side. NEMA Class 4X welded stainless steel with threaded hubs for a dimension of 6 inches for the longest side and larger.
Corrosive:	NEMA 4X, stainless steel or PVC coated cast aluminum.
Hazardous:	NEMA Class 7 cast aluminum.
Elbows:	
(3/4" thru 1-1/2")	Factory fabricated or field bent.
(2" thru 6")	Factory fabricated only.

3.07 RACEWAY SPECIFICATION SHEETS (RACESPEC)

Raceway Identification:	RAC (continued)
Conduit Bodies:	
(3/4" thru 4")	Oversized conduit bodies: non-ferrous, copper-free aluminum alloy type with powdered epoxy finish and screw taps for fastening covers. Gaskets shall be made of neoprene. Tapered threads for conduit entrances.
(5" and 6")	Cast aluminum box.
Manufacturers:	Appleton, Crouse-Hinds, Hubbell, O. Z. Gedney, or equal.
Installation:	Joints: made with standard couplings or threaded unions. RAC: 1. Made up tight with thread compound by Ideal, NoAlox anti-oxidant, Crouse-Hinds STL or equal. 2. Supported away from the structures and concrete using stainless steel straps with nesting backs. 3. Terminate with a threaded hub with a grounding bushing where entering boxes. 4. Exposed male threads on rigid aluminum conduit shall be coated with Teflon-rich product. 5. Threaded with manufacture approved special dies and bent proper tools.

3.07 RACEWAY SPECIFICATION SHEETS (RACESPEC)

Raceway Identification:	LFS
Description:	Liquidtight Flexible Steel Conduit
Application:	Final connection to equipment subject to vibration or adjustment.
Compliance:	UL 360
Construction:	Spirally wound galvanized steel strip with successive convolutions securely interlocked and jacketed with liquidtight plastic cover.
Minimum size:	3/4 inch
Fittings:	Cadmium-plated malleable iron body and gland nut with cast-in lug, brass grounding ferrule threaded to engage conduit spiral. O-ring seals around the conduit and box connection and insulated throat. Provide forty-five and ninety degree fittings where applicable. Provide PVC coated flexible conduit and fittings where the conduit system is PVC coated.
Installation:	Length of flexible liquidtight conduit shall not exceed 15 times the trade diameter of the conduit and not exceed 36 inches in length. Use conductive thread compound.

3.07 RACEWAY SPECIFICATION SHEETS (RACESPEC)

Raceway Identification:	PGRS
Description:	Rigid Steel Conduit, Corrosion-Resistant, Polyvinyl Chloride (PVC) Coated. Provide factory made and coated elbows.
Compliance:	PVC coated conduit must be listed by UL with both the zinc coating and the PVC coating, each serving as primary coatings by itself under UL-6. The PVC coating on the conduit shall conform in all respects to the NEMA RN-1 standard.
Finish:	PGRS shall be hot-dip galvanized rigid steel conduit as specified in 16110-3.03 GRS, with a PVC Coating. The PVC coating shall be gray, minimum 40 mils thick, bonded to the outside and continuous over the entire length of the conduit except at the threads, and be free of blisters, bubbles, or pinholes. Thread protectors shall be used on the exposed threads of the PVC coated conduit. A 2-mil coat of urethane enamel coating shall be bonded to the inside. Coating shall be free of pinholes. Bond strength shall exceed the tensile strength of the PVC coat.
Minimum size:	3/4 inch
Fittings:	All fittings shall be UL Listed prior to coating. Fittings to have 2-mil (.020”) thick urethane on both their interior and exterior surfaces. The bond of the interior coating shall be tested using the tape test method (ASTM D3359) and will show no trace of paint after an acetone wipe using test methods (ASTM D1308). Fittings shall be provided with Type 316 stainless steel hardware. Conduit and fittings shall be manufactured by the same company Conduit and fittings shall be coated by the same company. Male threads on elbows and nipples, and female threads on fittings or conduit couplings shall be protected by application of urethane coating.
Covers:	Form 8 fittings shall have an O-ring molded with the coating of their covers. The fittings shall pass a UL observed pressure and vacumm test retaining 25 inch of vacuum and 17 psi of pressure for a period of 80 hours. All fittings shall be supplied with stainless steel screws equipped with PVC encapsulated heads.

Hubs: Hubs for connection of conduit to junction, device, or terminal boxes shall be threaded cast ferrous alloy.
Hubs shall have the same PVC coating as the conduit and insulating grounding bushings. Hubs shall utilize a neoprene "O" ring and shall provide a watertight connection.

3.07 RACEWAY SPECIFICATION SHEETS (RACESPEC)

Raceway Identification: PGRS (continued)

Boxes:

Nonhazardous: NEMA Class 4X stainless steel or nonmetallic.

Hazardous: NEMA Class 7 cast ferrous.

Manufacturers: UL Listed, PVC coated conduit by Robroy Industries: Plasti-Bond; Perma-Cote; KorKap; and Calbond, Ocal or approved equal.

Installation: Plastic coated conduit shall be made up tight, threaded, and installed using tools approved by the PVC-coated conduit manufacturer.

Exposed conduit threads shall be covered by a plastic overlap coated and sealed per manufacturer's recommendations.

Pipe wrenches and channel locks shall not be used for tightening plastic coated conduits. Damaged areas shall be patched, using manufacturer's recommended material. The area to be patched shall be built up to the full thickness of the coating. Painted fittings are not acceptable.

PVC coated conduit shall be supported away from the structure using PVC coated conduit wall hangers or PVC coated conduit mounting hardware.

Damaged work shall be replaced

Training: Installers shall be trained and certified in the proper installation techniques provided by the PVC-coated conduit system manufacture. Proof of certification shall be provided under paragraph 16110-1.03.

3.07 RACEWAY SPECIFICATION SHEETS (RACESPEC)

Raceway Identification:	PVC4
Description:	Rigid Nonmetallic Conduit.
Application:	Heavy wall thickness for direct bury, concrete encasement or surface mounting where not subject to physical damage.
Compliance:	NEMA TC2, UL 651
Construction:	Schedule 40, high-impact, polyvinylchloride (PVC)
Minimum size:	3/4 inch exposed; 1 inch embedded or encased
Fittings:	PVC solvent weld type
Boxes:	
Indoor:	NEMA Class 4, nonmetallic
Outdoor and corrosive:	NEMA Class 4X, nonmetallic
Installation:	PVC conduit entering fiberglass boxes or cabinets shall be secured by threaded bushings on the interior of the box and shall be terminated with a threaded male terminal adapter having a neoprene O ring. Joints shall be made with standard PVC couplings. PVC conduit shall have bell ends where terminated at walls and boxes.

3.07 RACEWAY SPECIFICATION SHEETS (RACESPEC)

Raceway Identification:	WW
Description:	Wireway and Auxiliary Gutter: Match the conduit or raceway system specified and shown on the drawings. Minimum: Flanged, oiltight type with hinged covers
Application:	As shown on the drawings.
Compliance:	JIC EMP-1
Sizes as shown:	4 inch by 4 inch, 6 inch by 6 inch, 8 inch by 8 inch
Finish:	Hot-dip galvanized after fabrication, inside and outside. Smooth finished surfaces.
Indoor non-corrosive area:	NEMA-1, NEMA-12, NEMA-4 or as shown on the drawings.
Outdoor and corrosive area:	NEMA-3R, NEMA-4X or as shown on the drawings.

3.07 RACEWAY SPECIFICATION SHEETS (RACESPEC)

Raceway Identification:	XPFS
Description:	Explosion-proof Flexible Steel Conduit
Application:	XPFS Conduit coupling shall be used for final connections to motors and other equipment subject to vibration or adjustment in Class I Division 1 hazardous areas and shall be watertight.
Size:	1/2 inch – 4-inch
Length:	4-inch – 36-inch

END OF SECTION

SECTION 16120

600-VOLT CONDUCTORS, WIRE, AND CABLE

PART 1--GENERAL

1.01 DESCRIPTION

This section specifies stranded copper cables, conductors, and wire rated 600 volts insulation used for power; lighting, analog, digital, or pulse signals and control circuits.

1.02 REFERENCES

This section contains references to the following documents. They are a part of this section. In case of conflict between the requirements of this section and those of the listed documents, the requirements of this section shall prevail.

Unless otherwise specified, references to document shall mean the documents in effect at the time of Advertisement for bids or Invitation to Bid (or on the effective date of the Agreement if there were no Bids). If referenced documents have been discontinued by the issuing organization, references to those documents shall mean the replacement documents issued or otherwise identified by that organization or, if there are no replacement documents, the last version of the document before it was discontinued. Where document dates are given in the following listing, references to those documents shall mean the specific document version associated with that date, whether or not the document has been superseded by a version with a later date, discontinued or replaced.

Reference	Title
ASTM B3	Soft or Annealed Copper Wire
ASTM B8	Concentric-Lay-Stranded Copper Conductors, Hard, Medium-Hard, or Soft
ASTM B33	Tinned Soft or Annealed Copper Wire for Electrical Purposes
ICEA S-68-516	Ethylene-Propylene-Rubber-Insulated Wire
NEMA WC7	Cross-Linked-Thermosetting Insulated Wire and Cable for the Transmission and Distribution of Electric Energy
NFPA 70	National Electrical Code (NEC)
UL 44	Rubber-Insulated Wires and Cables
UL 83	Thermoplastic-Insulated Wires and Cables

1.03 SUBMITTALS

The following information shall be provided in accordance with Section 01300.

1. Submittals specified in Section 16000.

2. Complete catalog cuts for all conductors, wire, and cable.

PART 2--PRODUCTS

2.01 GENERAL

A. UNSCHEDULED CONDUCTORS AND CABLES:

Where not specified on the Drawings, conductors and cables shall be sized in accordance with the National Electrical Code for the particular equipment served with the minimum size as specified herein.

Unscheduled conductor with insulation shall be provided in accordance with the following:

1. CABLESPEC "MEPR/CPE" multi-conductor power and control cable

2. CABLESPEC “XHHW or THWN” for single conductors

3. CABLESPEC “THWN” for indoor lighting and receptacles

B. CABLE SPECIFICATION SHEETS (CABLESPEC):

General requirements for conductors and cables specified in this Section are listed on CABLESPEC sheets in paragraph 16120-3.06.

2.02 COLOR CODING

A. CONTROL CONDUCTORS:

Single-conductor control conductors shall have the following colors for the indicated voltage:

Control Conductor	120V
Power (AC)	Black
Control (AC)	Red
Neutral	White
Ground	Green
Foreign Voltage (DC)	Blue/White

Control Conductor	120V
Foreign Voltage (AC)	Yellow
Power (DC)	Blue
Control (DC)	Violet

B. POWER CONDUCTORS:

Power conductors shall have the following colors for the indicated voltage:

Power Conductor	480V	208/120V
Phase A	Brown	Black
Phase B	Orange	Red
Phase C	Yellow	Blue
Ground	Green	Green
Neutral	Gray	White

Cables may be black with colored 3/4-inch vinyl plastic tape applied at each cable termination. Tape shall be wrapped with 25 percent overlay to provide 3 inches minimum coverage.

C. SIGNAL CONDUCTORS:

Signal cable conductors shall be color coded black and white for pairs or black, white, and red for triads. Each conductor and each group of conductors shall be numbered.

2.03 POWER AND CONTROL CONDUCTORS AND CABLE, 600 VOLT

A. SINGLE CONDUCTOR:

Provide stranded conductors for all cable or wires. Provide minimum conductor size of 12 AWG for power and lighting circuits and minimum conductor size of 14 AWG for control circuits.

B. MULTICONDUCTOR CABLE:

Provide multiconductor power cable and multiconductor control cable where identified on the drawings. Provide stranded conductors for all cable or wires.

Provide Type MXLPE cable between all variable/adjustable frequency drives and motors. Contractor shall verify conduit sizing is based on actual cable diameter and min. percent fill requirements per the NEC.

2.04 SIGNAL CABLES

A. GENERAL:

Factory cable between manufactured instrument system components shall be provided in compliance with the instrument manufacturer's recommendations.

Signal cable shall be provided for instrument signal transmission. Single instrument cable (SIC) and multiple-circuit instrument cable (MIC) shall be provided in accordance with the following examples:

CABLESPEC “SIC”:
Cable designation: 1PR#16S shielded twisted pair (STP)
Cable designation: 1TR#16S triad (STT)

CABLESPEC “MIC":
Cable designation example: 4PR#16S with individual shields for each of the four pair and an overall shield and jacket for the multiconductor instrument cable.

B. COMMUNICATION, PAGING, AND SECURITY SYSTEM CABLES:

Voice communication, paging, and security system cables shall be specified in their respective specification sections.

2.05 PORTABLE CORD

Portable cord shall be provided in accordance with CABLESPEC "CORD," unless otherwise specified. Cords shall contain an equipment grounding conductor.

2.06 SPLICING AND TERMINATING MATERIALS

Connectors shall be tool applied compression type of correct size and UL listed for the specific application. Connectors shall be tin-plated high conductivity copper. Wire nuts for a splice is prohibited.

Signal and control conductors shall be connected to terminal blocks and field devices and instruments shall be terminated with conductor terminals as specified in paragraph 16000-2.02.

Connectors for wire sizes No. 8 AWG and larger shall be compression tool installed one-hole lugs up to size No. 3/0 AWG, and two-hole or four-hole lugs for size No. 4/0 and larger. Mechanical clamp, dimple, screw-type connectors are not acceptable. In-line splices and taps shall be used only by written consent of the Engineer.

Power conductor splices shall be compression type, made with a compression tool die approved for the purpose, as made by Thomas and Betts Corp., or equal. Splices shall be covered with electrical products designed for the application, insulated, and covered with a heat-shrinkable sleeve or boot, as specified elsewhere.

Motor connection kits shall consist of heat-shrinkable, polymeric insulating material over the connection area and high dielectric strength mastic to seal the ends against ingress of moisture and contamination. Motor connections may use the Tyco Electronics removable boot product line.

Motor connection kits shall accommodate a range of cable sizes for both in-line and stub-type configurations. Connection kits shall be independent of cable manufacturer's tolerances. Refer to the electric motor specification Section 11060.

2.07 CORD GRIPS

Cord grips shall be provided where indicated on the Drawings to attach flexible cord to equipment enclosures. Cord grips shall consist of a threaded aluminum body and compression nut with a neoprene bushing and stainless steel wire mesh for strain relief. Cord grip shall provide a watertight seal at enclosure interface and sized to accommodate the flexible cord.

PART 3--EXECUTION

3.01 GENERAL

Conductors shall be identified at each connection terminal and at splice points. The identification marking system shall comply with Section 16000.

Pulling wire and cable into conduit or trays shall be completed without damaging or putting undue stress on the insulation or jacket. Manufacture recommended and UL Listed pulling compounds are acceptable lubricants for pulling wire and cable. Grease is not acceptable.

Raceway construction shall be complete, cleaned, and protected from the weather before cable is installed. Where wire or cable exits a raceway, a wire or cable support shall be provided.

Provide tin-plated bus bar. Scratch-brush the contact areas and tin plate the connection where flat bus bar connections are made with un-plated bar. Bolts shall be torqued to the bus manufacturer's recommendations.

3.02 600 VOLT CONDUCTOR AND CABLE

Conductors in panels and electrical equipment shall be bundled and laced at intervals not greater than 6 inches, spread into trees and connected to their respective terminals. Lacing shall be made up with plastic cable ties. Cable ties shall be tensioned and cut off by using a tool specifically designed for the purpose such as a Panduit GS2B. Other methods of cutting cable ties are unacceptable.

Conductors crossing hinges shall be bundled into groups not exceeding 10 to 15 conductors and protected using nylon spiral flexible covers to protect conductors. Provide oversized plastic panel wiring duct within panels and panelboards.

Slack shall be provided in junction and pull boxes, handholes and manholes. Slack shall be sufficient to allow cables or conductors to be routed along the walls. Amount of slack shall be equal to largest dimension of the enclosure. Provide dedicated electrical wireways and insulated cable holders mounted on unistrut in manholes and handholes.

Raceway fill limitations shall be as defined by NEC and the following:

1. Lighting and receptacle circuits may be in the same conduit in accordance with de-rating requirements of the NEC. Lighting and receptacle circuits shall not be in conduits with power or control conductors. Signal conductors shall be in separate conduits from power conductors. Motor feeder circuits shall be in separate conduits including small fan circuit unless combination fan-light fixture.

2. Power conductors derived from uninterruptible power supply systems shall not be installed in raceways with conductors of other systems. Install in separate raceways.

3. Slices and terminations are subject to inspection by the Engineer prior to and after insulating.

4. Motor terminations at 460-volt motors shall be made by bolt-connecting the lugged connectors.

5. In-line splices and tees, where approved by the Engineer, shall be made with tubular compression connectors and insulated as specified for motor terminations. Splices and tees in underground handholes or pull boxes shall be insulated using Scotch-cast epoxy resin or Raychem splicing kits.

6. Terminations at solenoid valves, 120 volt motors, and other devices furnished with pigtail leads shall be made using self-insulating tubular compression connectors within the termination box.

7. Terminations at valve and gate motor actuators shall be made directly into the actuator where possible. Power termination shall be made in the actuator power disconnect. Control and signal cable may be routed to a termination box near the actuator on 20-ampere rated terminal strips with label identification for the control and signal conductors. Single wire control conductors and analog cable (SIC or MIC) then installed in flexible conduit to the actuator control and signal termination compartments.

3.03 SIGNAL CABLE

Provide terminal blocks at instrument cable junctions within dedicated terminal boxes provided by the installer. Signal circuits shall be run without splices between instruments, terminal boxes, or panels.

Circuits shall not be made using conductors from different pairs or triads. Triads shall be used wherever 3-wire circuits are required.

Shields are not acceptable as a signal path, except for circuits operating at radio frequencies utilizing coaxial cables. Common ground return conductors for two or more circuits are not acceptable.

Shields shall be bonded to the signal ground bus at the control panel only and isolated from ground at the field instrument or analyzer and at other locations. Shields or drain wires for spare circuits shall not be grounded at either end of the cable run. Terminals shall be provided for running signal leads and shield drain wires through junction boxes.

Spare circuits and the shield drain wire shall be terminated on terminal blocks at both ends of the cable run and be electrically continuous through terminal boxes.

Where instrument cable splicing is required, provide an instrument stand with terminal box rated for the area and environment and mounted approximately 3 feet above grade for instrument cable splices with the circuits and individual conductors provided with label as specified in Section 16000.

Cable for paging, security, voice communication, and telephone systems shall be installed and terminated in compliance with the manufacturers and the Utilities recommendations.

3.04 PORTABLE CORD

Portable power cords feeding permanent equipment, such as pendant cords feeding motors for pumps, cranes, hoists, and portable items shall have a wire mesh cord grip of flexible stainless steel wire to relieve the tension from the cable termination. Connection of portable cords to permanent wiring shall be accomplished with dedicated boxes and terminals blocks.

3.05 TESTING

The Contractor shall test conductors, wire, and cable in accordance with Section 16030.

3.06 CABLE SPECIFICATION SHEETS (CABLESPEC)

A. GENERAL:

Conductor, wire, and cable types for different locations, service conditions and raceway systems are specified on individual cable specification sheets. Scheduled and unscheduled conductors, wires, and cables shall be installed in accordance with the CABLESPEC SHEETS.

B. CABLESPEC SHEETS:

The following CABLESPEC sheets are included in this section:

Type	Volt	Product	Purpose
DC1	300	RS-422: 4-PAIR, 24-AWG UNSHIELDED JACKETED PREMISE WIRE	DATA COMMUNICATION FAST ETHERNET: 100 BASE T CABLE, VIDEO, CCTV
DC2	30	RS-485: 24-AWG, JACKETED PREMISE WIRE	DATA COMMUNICATION REMOTE I/O CABLE
DC3	300	FIBERS CABLE INDOOR/OUTDOOR	DATA COMMUNICATION FIBER OPTIC CABLE
MIC	600	SP-OS: MULTIPLE PAIR PR#18 or 16SH WITH OVERALL SHIELD AND JACKET	CABLE TRAY RATED INSTRUMENT CABLE
SIC	600	P-OS: 1-PR#18 or 16SH or 1-TR#18 or 16SH	CABLE TRAY RATED INSTRUMENT CABLE
THWN	600	PVC INSULATED WITH NYLON JACKET BUILDING GRADE CONDUCTOR	POWER, CONTROL LIGHTING & RECEPTACLES
XHHW	600	XLP INSULATED INDUSTRIAL GRADE CONDUCTOR	POWER, CONTROL, LIGHTING, & RECEPTACLES
MEPR/XLP	600	MULTICONDUCTOR RUBBER INSULATED CABLE WITH JACKET EXAMPLES: POWER CABLE: 3/C #500 KCMIL WITH FACTORY GROUND CONDUCTOR WITHIN CABLE CONTROL CABLE: 19/C #14	CABLE TRAY RATED POWER & CONTROL
MXLPE	1000	MULTICONDUCTOR SHIELDED MOTOR CABLE WITH PVC JACKET	FLEXIBLE 3/C CABLE WITH NEC GROUND CONDUCTOR. MOTOR FEEDER RANGE: 16 AWG - 500KCMIL
CORD	600	HEAVY DUTY CABLE: SJOOW	PORTABLE ITEMS
TCX	300	THERMOCOUPLE EXTENSION CABLE	MATCH THERMOCOUPLE MATERIAL]
COAX		RADIO FREQUENCY CO-AXIAL CABLE	DATA COMMUNICATIONS

Cable System Identification:	DC1
Description:	Premise Cable: IEC Category 5 UTP; NEMA WC-63.1 Category 5e; Fast Ethernet: 100 Base TX; 4 pair, #24 AWG Cable
Voltage:	300 V RMS -
Conductor Material:	Solid Bare copper
Insulation Material:	FRPO - Flame Retardant Polyolefin / FEP -Fluorinated Ethylene Propylene; Color Coded conductor insulation
Jacket:	LS PVC - Low Smoke Polyvinyl Chloride with ripcord Trade Name Example: Flame arrest Sequential Footage Marking: every 2 feet Jacket Color: Blue
Manufacturer(s):	Cooper Industries – Belden 1585A; or equal.

Execution:

Applications:	Gigabit Ethernet Data Communications LAN, CCTV Fixed. Component or Composite Video, Digital Video, RS-422,
Installation:	Install in accordance with associated equipment manufacturer's instruction.
Testing:	Test in accordance with paragraph 16120-3.05.

Cable System Identification:	DC2
Description:	Shielded Data Communication Cable; Remote I/O Cable: RS-485 #22 or #24 AWG Copper.
Voltage:	30 V RMS
Conductor Material:	Tinned copper
Insulation:	Polyethylene; Trade Name Example: Datalene
Jacket:	PVC or CPE Color: Chrome
Manufacturer(s):	Cooper Industries-Belden YM-29560 or equal
Execution:	
Application:	DCU or PLC to Remote I/O - Data Communications Cable.
Installation:	Install in accordance with associated equipment manufacturers instruction.
Testing:	Test in accordance with paragraph 16120-3.05.

Cable System Identification:	DC3
Description:	Fiber Optic Data Cable; 6-Conductor: Color Examples: 1-Blue, 2-Orange, 3-Green, 4-Brown, 5-Slate, 6-White; Indoor/Outdoor; Heavy Duty-MFPT; Cable Tray Rated
Material:	62.5/125/250 micron
Jacket:	Chlorinated Polyethylene (CPE) Color: Orange
Type:	NEC (UL): OFNR with industrial cable tray rating IEEE flame test rated: 802.3Z
Manufacturer(s):	Cooper Industries-Belden I100666; or Engineer accepted equal

Execution:

Application:	Data Communications. (Not Plenum Rated)
Installation:	Install in accordance with paragraph 16120-3.03 and associated equipment manufacturers instruction.
Testing:	Test in accordance with paragraph 16120-3.05.

Cable System Identification:	MIC
Description:	Multiple twisted, shielded pairs, 18 or 16 AWG, with overall shield instrumentation cable; Number of pairs as shown or required for service; UL listed, Cable Tray rated.
Voltage:	600 volts
Conductor Material:	Bare annealed copper; Class-B stranded per ASTM B-8
Insulation:	15 mil, Polyvinyl Chloride (PVC) with 4 mil nylon, 90 degree C temperature rated Color Code per ICEA Method-1: Pairs- Black and White with one conductor in each pair printed alpha-numerically for identification
Lay:	Twisted on a 2-inch lay
Shield:	100 percent, 1.35 mil aluminum/polyester or mylar tape with 7-strand tinned copper drain wire
Overall Shield:	2.35 mil aluminum-Mylar tape with 7-strand tinned copper drain wire
Jacket:	Flame-retardant, moisture and sunlight resistant 45 mil Polyvinyl Chloride (PVC)
Flame Resistance:	UL 1277 and UL 1581 vertical tray flame test
Manufacturer(s):	Okonite, Okoseal-N type SP-OS (Shielded Pairs with Overall Shield); or Cooper Industries-Belden equal; or General Cable equal
Execution:	
Installation:	Install in accordance with paragraph 16120-3.03.
Testing:	Test in accordance with paragraph 16120-3.05.

Cable System Identification:	SIC
Description:	Single twisted, shielded pair or triad, 18 or 16 AWG, instrumentation and signal cable; UL listed; Cable Tray rated
Voltage:	600 volts
Conductor Material:	Bare annealed copper; stranded per ASTM B8
Insulation:	15 mil, Polyvinyl Chloride (PVC) with 4 mil nylon, 90 degree C temperature rated Color Code per ICEA Method-1: Pairs- Black and White with one conductor in each pair printed alpha-numerically for identification
Lay:	Twisted on a 2-inch lay
Shield:	100 percent, 1.35 mil aluminum-Mylar tape with a 7-strand tinned copper drain wire
Jacket:	45 mil Polyvinyl Chloride (PVC)
Flame Resistance:	UL 1277
Manufacturer(s):	Okonite, Okoseal-N Type P-OS (Pair(s) Overall Shield) and Type TOS (Triad(s) Overall Shield); or Cooper Industries-Belden equal; or General Cable equal

Execution:

Use:	Analog signal cable and RTD device Triad extension cable.
Installation:	Install in accordance with paragraph 16120-3.03.
Testing:	Test in accordance with paragraph 16120-3.05.

Cable System Identification:	THWN
Description:	Single conductor lighting and receptacle type; Indoor branch circuit conductor.
Voltage:	600 volts
Conductor Material:	Bare annealed copper; stranded per ASTM B8
Insulation:	THWN-2/THHN, 90 degree C dry, 75 degree C wet, Polyvinyl Chloride (PVC) per UL 83.
Jacket:	Nylon
Flame Resistance:	UL 83
Manufacturer(s):	Okonite, Okoseal-N, series 116-67-XXXX; or equal.
Uses Permitted:	Any lighting, receptacle circuits; power and control circuits up to #8AWG; larger shall be XHHW-2.

Execution:

Installation:	Install in accordance with paragraph 16120-3.02.
Testing:	Test in accordance with paragraph 16000-3.02 and Section 16030.

Cable System Identification:	XHHW
Description:	Industrial grade single conductor Sizes: 14 AWG through 750 kcmil as shown
Voltage:	600 volts
Conductor Material:	Bare annealed copper; stranded per ASTM B8
Insulation:	NEC Type XHHW-2; 90 degree C dry and C wet; Cross-Linked Polyethylene (XLP) per ICEA S-66-524 and UL-44; Color in sizes 14, 12 and 10 AWG: Black, Green, Yellow, White, Orange, Brown, Red, Blue
Jacket:	None
Flame Resistance:	UL 83
Manufacturer(s):	Okonite, X-Olene; Cablec, Durasheath XLP; or equal.
Uses Permitted:	Power, control, lighting and outlet circuits.
Execution:	
Installation:	Install in accordance with paragraph 16120-3.02.
Testing:	Test in accordance with paragraph 16000-3.02 and Section 16030.

Cable System Identification:	MEPR
Description:	Multiconductor Power Cable and Multiconductor Control Cable:14 AWG stranded conductors; Cable tray rated.
Power Cable:	Insulated green grounding conductor sized per the NEC.
Ground Conductor Size:	Multiple sets of multiconductor power cable: Oversize the grounding conductor per NEC 250.
Control Cable Type:	ICEA Method 1, E-2, without white neutral conductor or green ground conductor
Control Cable Identification:	Conductors color coded per ICEA and conductors numbered
Voltage:	600 volts
Conductor Material:	Bare annealed copper; stranded per ASTM B8, coated per ASTM B33
Insulation:	RHW/RHH, 90 degree C dry, 75 degree C wet, ethylene propylene rubber (EPR) per ICEA 2-68-516 and UL 44.
Jacket:	Cross-linked Polyethylene (XLP)
Flame Resistance:	IEEE 383
Manufacturer(s):	Okonite, Okonite-Okolon-Okoseal series 202-11-3XXX; Cablec, Durasheath EP; or equal.

Execution:

Installation:	Install in accordance with paragraph 16120-3.02.
Testing:	Test in accordance with paragraph 16000-3.02 and Section 16030.

Cable System Identification:	MXLPE / S / PVC
Description:	1000 Volt Rated - Flexible Motor Supply Shielded Cable
Power Cable:	Multi-conductor shielded motor feeder cable with PVC jacket: 3/C cable with conductors sizes from #16-AWG to #2-AWG with grounding conductor.
Ground Conductor Size:	Sized per NEC 250
Application:	Feeder cable between VFD motor controller and motor.
Conductor Material:	Flexible copper with high strand count
Insulation:	Thermoset Crosslinked Polyethylene (XLPE): 90 degree C dry, 75 degree C wet, per UL 44.
Jacket:	PVC over assembly; jacket thickness per UL 1277 Cable Tray rated UL 1277 Type TC
Shield:	Tinned copper braid and foil
Flame Resistance:	IEEE 383 Fire Test (70,000 BTU) IEEE 1202: Limited Smoke rated and labeled on cable jacket UL 1685: Vertical Tray Flame Exposure Test
Manufacturer(s):	Anixter B2095XX series Belden 295XX series LAPPUSA OLFLEX VFD Symmetrical: 1AWG - 500kcmil LAPPUSA OLFLEX Servo 2YSLCY-JB flexible cable

Execution:

Installation:	Install in accordance with paragraph 16120-3.02. Install in conduit or cable tray. Not to be used for open wiring installation. Ground shields at both ends. Shield terminating gland may be used at the motor to ensure grounding the shield.
Testing:	Test in accordance with paragraph 16120-3.05 and Section 16030.

Cable System Identification:	CORD
Description:	Industrial Grade Flexible Portable Cord: Synthetic Rubber Insulation with Oil-Resistant Thermoset Jacket construction: Type SOOW for 600 Volt circuits; Type SJOOW for 300 Volt circuits
Voltage:	600 V RMS where shown or where unspecified: Type SOOW
Conductor Material:	Flexible rope stranded annealed copper per ASTM B189 and B33.
Insulation:	Insulation: Ethylene propylene (EPR) per ICEA S-68-516 and rated for continuous operation at 90 degrees C. Green used for ground only Color: 2/C Black and White; 3/C Black, White, and Green; 4/C Black, White, Red and Green; 5/C Black, White, Red, Green, and Orange
Jacket:	Heavy-duty Neoprene per ICEA S-68-516. Color: Black
Manufacturer(s):	Okonite: Okocord; American Insulated Wire Cord equal; or Engineer accepted equal.

Execution:

Installation:	Install in accordance with paragraph 16120-3.02.
Testing:	Test in accordance with paragraph 16120-3.05.

Cable System Identification:	TCX
Description:	Thermocouple Cable Extension: Type PLTC cable approved for cable tray installation; Per NEC Article 725.
Voltage:	300 volts
Conductor Material:	Solid alloy, consistent with the type of thermocouple material specified.
Insulation:	15 mil, 90 degree C, flame-retardant polyvinylchloride (PVC) with 4 mil nylon cover.
Lay:	Twisted on 2-inch lay.
Shield:	100 percent, 1.35 mil aluminum-Mylar tape.
Jacket:	45 mil nylon jacket.
Manufacturer(s):	Okonite, P-OS type PLTC; or equal

Execution:

Installation:	Install in accordance with manufacturers instructions.
Testing:	Test in accordance with paragraph 16120-3.05.

Cable System Identification:	COAX
Description:	Premise Cable: Indoor Riser and Plenum with FRPE Jacket Outdoor / Watertight: Ductbanks Systems with PE Jacket Low Loss Flexible Communication Coaxial Cable
Voltage:	300 V; Voltage Withstand: 3000 Volts DC;
Conductor Material:	Solid 18 AWG; Nominal Impedance: 50-ohm; Nominal Capacitance: 20 Pico-Farad per foot; Bend Radius: 2 inches
Insulation Material:	Foam Polyethylene (PE) or Tetrafluoroethylene (TFE) UL Flame Test: NFPA-262 NEC Type Specification: CMP
Jacket:	Polyethylene (PE), Fire Retardant Polyethylene (FRPE) or Fluorinated Ethylene Propylene (FEP)
Manufacturer(s):	Times Microwave System: LMR-500; Belden Number 83242: 50-ohm Coax -- RG Type 142 B/U; or Engineer accepted equal.

Execution:

Applications:	Giga-Hertz Data Communications, CCTV Fixed. Component or Composite Video, Digital Video
Installation:	Install in accordance with associated equipment manufacturer's instruction. Provide male, female, TNC Male, UHF Male, straight, bulkhead, right-angle etc connectors, fittings, with crimp tools, dies, strip tools, deburr tools and cutting tools as required for the installation.
Testing:	Test in accordance with paragraph 16120-3.05.

END OF SECTION

SECTION 16140

WIRING DEVICES

PART 1--GENERAL

1.01 DESCRIPTION

This Section specifies wiring devices consisting of receptacles, plugs, switches and appurtenances.

1.02 REFERENCES

This Section contains references to the following documents. They are a part of this Section as specified and modified. Where a referenced document contains references to other standards, those documents are included as references under this Section as if referenced directly. In the event of conflict between the requirements of this Section and those of the listed documents, the requirements of this Section shall prevail.

Unless otherwise specified, references to documents shall mean the documents in effect at the time of Advertisement for Bids or Invitation to Bid (or on the effective date of the Agreement if there were no Bids). If referenced documents have been discontinued by the issuing organization, references to those documents shall mean the replacement documents issued or otherwise identified by that organization or, if there are no replacement documents, the last version of the document before it was discontinued. Where document dates are given in the following listing, references to those documents shall mean the specific document version associated with that date, regardless of whether the document has been superseded by a version with a later date, discontinued or replaced.

Reference	Title
NEMA 250	Enclosures for Electrical Equipment (1000 volts maximum)
NEMA WD-1	General Requirements for Wiring Devices
NFPA 70	National Electrical Code (NEC)

PART 2--PRODUCTS

2.01 GENERAL

Wiring devices shall be UL approved for the current and voltage specified and shall comply with NEMA WD-1. Devices shall contain provisions for back wiring and side wiring with captive binding screws.

Provide devices colored to conform to manufacturer’s or industry standard for special use such as orange for isolated ground receptacles, blue for surge suppression receptacles, and red

for emergency power receptacles. Unless shown otherwise on the Drawings or Schedules, normal use devices shall be brown, except those located in finished areas shall be ivory or gray.

2.02 RECEPTACLES AND PLUGS

A. GENERAL:

Receptacles shall be grounding type.

B. 120V RECEPTACLES:

1. INDOOR, CLEAN AREAS: Unless shown otherwise on the Drawings or Schedules, receptacles shall be duplex 20 amp, NEMA 5-20R, and shall accept NEMA 5-15P and 5-20P plugs. Where the manufacturer of cord connected equipment requires and isolated ground, a receptacle with isolated ground shall be provided.

Manufacturers: Hubbell 5362, 5362-AI or equal.

Isolated ground receptacle manufactures: Hubbell IG-5362, Arrow-Hart IG5362, or equal.

2. OUTDOOR, PROCESS OR CORROSIVE AREAS: Receptacle shall be weather resistant, duplex, 20 ampere, NEMA 5-20R, and shall accept NEMA 5-15P and 5-20P plugs. Receptacle and plug shall be corrosion resistant, marine duty with yellow polycarbonate weatherproof lift covers. Receptacles shall be listed as weather resistant type per NEC Article 406.8, “Receptacles in Damp and Wet Locations. Convenience receptacles in these areas shall be GFCI protected.

Manufacturers: Hubbell 53CM62/53CM21, 15W33W/O BOX, or equal.

C. 250V RECEPTACLES:

Receptacles shall be duplex 15 amp, NEMA 6-15R, and shall accept NEMA 6-15P plug caps. Receptacles shall be Hubbell 5662, Arrow Hart 5662, or equal. Plug caps shall be Hubbell 5666-C, Arrow-Hart 6866, or equal.

D. PLUG CAPS:

Male plug caps for 120 volt and 250 volt receptacles shall be of the cord grip armored type with heavy phenolic housing, of the same manufacture as the receptacle. Plug caps shall be rated 15 amps. One plug cap shall be provided for every four receptacles furnished, with a minimum of two plug caps being provided. Plug caps shall be delivered to the Engineer.

E. THREE PHASE RECEPTACLES AND PLUGS:

Receptacles shall be suitable for 480 volt, 3-phase, 4-wire service, with ampere ratings as specified. Receptacles and plugs shall be designed so that the grounding pole is permanently connected to the housing. The grounding pole shall make contact before the line poles are engaged when the plug is connected to the receptacle housing. The plug sleeve shall also make contact with the receptacle housing before the line and load poles make contact. Receptacles

shall be provided complete with cast back box, angle adapter, gaskets, and a gasketed screw-type, weathertight cap with chain fastener. Each receptacle shall be provided with one plug.

Manufacturers: Crouse-Hinds "Arktite," Appleton "Powertite," or equal.

F. RECEPTACLES FOR HAZARDOUS AREAS:

Receptacles for use in hazardous areas shall be rated in accordance with NEC for the area in which they are to be located and shall be factory sealed. Receptacles shall be designed so the plug must be inserted and turned before load is energized. Receptacles shall be provided with mounting box, sealing chamber, and compatible plug. Voltage and current ratings shall be as 120 Vac, 20-ampere.

Manufacturers: Appleton "U-Line," Crouse-Hinds "Ark-Gard 2," or equal.

G. IN-USE COVERS:

Equipment that is to be continuously fed by plug and receptacle and in areas designated NEMA-4X, CORROSIVE, or other areas specified, and in outdoor areas, provide in-use type weatherproof lift covers that maintain weatherproof rating with plug installed for equipment that is cord connected with plug and receptacle. Covers shall be cast aluminum.

Manufacturer: Outdoor, NEMA 4X areas: In-use covers shall be Hubbell WP7, WP8, WP26, or equal. CORROSIVE areas; Manufacturer: TayMac Corporation 20510, Carlon E9UXXXX, Hubbell WP826XXX, or equal.

2.03 SWITCHES

A. GENERAL PURPOSE (INDOOR, CLEAN AREAS):

General purpose switches shall be quiet AC type, specification grade, back and side wired, and shall be provided in accordance with rated capacities as required or as indicated on Drawings or Schedules. Switches shall match receptacles in color.

Manufacturers: General Electric, Hubbell, or Engineer accepted substitute, as follows:

	15A, 120-277V		20A, 120-277V	
	G.E. Co.	Hubbell	G.E. Co.	Hubbell
Single:	PS 15AC1	HBL1201	PS 20AC1	HBL1221
Three-way:	PS 15AC3	HBL1203	PS 20AC3	HBL1223
Four-way:	PS 15AC4	HBL1204	PS 20AC4	HBL1224
SPST momentary:	# 7842	--	--	--

Three position center off momentary:	# 1250	HBL1556	--	HBL1557

B. SWITCHES FOR HAZARDOUS AREAS:

Switches for control of lighting and small single-phase power loads in hazardous areas shall consist of a factory assembled and sealed combination general purpose type switch in an explosion-proof housing. The switch shall be rated in accordance with NEC for the area in which it is to be installed. The external operating mechanism shall consist of a wing-type handle having the "ON" and "OFF" positions visible from the front.

Manufacturers: Crouse-Hinds EDSC Type, Appleton EDSC Type, or equal.

C. SWITCHES FOR OUTDOOR AND CORROSIVE AREAS:

Switches shall be 20-ampere with weatherproof/ corrosion resistant neoprene plate. Switches shall be mounted in "FS" type copper-free aluminum or PVC mounting boxes.

Manufacturers: Hubbell or Arrow-Hart as follows:

	Hubbell with 17CM50 plate	Arrow-Hart with 2881 plate
Single pole	1281	2991
Double pole	1282	2992
3-way	1283	2993
4-way	1284	2994

D. OCCUPANCY SENSOR SWITCHES

Switches shall be UL listed, 1800VA@120V and 4000VA@277V, commercial grade, passive infrared, single pole occupancy sensor switch. Switch shall use passive infrared sensing, have adjustable time delay and manual pushbutton switch for ON/OFF light switching at any time. Switch shall fit in standard wallbox. Switch shall be Leviton ODS15-IDG or approved alternate.

E. OCCUPANCY SENSORS

Sensors shall be line voltage rated, passive infrared sensing, commercial grade, ceiling mounted. Sensor shall be Leviton ODC04-IDW or approved alternate.

2.04 DEVICE PLATES

Device plates shall be provided with switches and receptacles. In non-corrosive indoor areas, device plates shall be made of type 302 stainless steel as manufactured by Crouse-Hinds, Appleton, or equal.

Device plates in corrosive or outdoor areas shall be corrosion-resistant/marine-duty type, gasketed zinc plated malleable iron or aluminum with stainless steel screws.

Device plates for explosion-proof equipment shall be factory provided with the equipment, UL listed, rated for Class I, Div. 1 and 2 areas. Switch enclosed in separate sealing chamber provided with zinc plated malleable iron or copper free aluminum with stainless steel screws.

Device plates shall be provided with engraved laminated phenolic nameplates with 1/8-inch white characters on black background.

Nameplates for switches shall identify panel and circuit number and area served. Nameplates for receptacles shall identify circuit and voltage if other than 120 volts, single phase.

2.05 PLUG STRIPS

Plug strips shall be manufactured of sheet steel with the receptacles mounted on the front cover. The front cover shall be removable.

Plug strips for office and laboratory areas shall have single 3 wire, 20 ampere grounding type receptacles mounted along the strip on a single circuit.

Plug strips for work benches in shop and laboratory areas shall have 3 wire, 20 ampere grounding type duplex receptacles mounted along the strip on the circuits specified. Sufficient space shall be provided behind the receptacles for ten No. 12 AWG conductors in accordance with the NEC space rules.

Manufacture of plug strips: Plugmold, or equal.

2.06 VOICE AND DATA JACKS

Provide modular network jacks for voice and data systems. Jacks shall be Commercial Grade Products incorporating jacks for Category 5e or 6, telephone systems (USOC) and cable TV (CATV). Jacks shall be color coded to delineate the systems: Cat 5e/6: Blue; USOC: office white. Provide face plates as specified herein including label fields. Modular jacks shall be Hubbell Enterprise Grade Commercial Products or approved equal.

Contractor shall provide two (2) – Category 5e or 6 connection and a single (1) – USOC jack in locations as shown on the plans. Provide CATV jacks as indicated on the plans. At a minimum, the Contractor shall provide a single (1) – USOC and CATV jack in the Break Room and Control Room along with a data jack as described above.

Contractor shall coordinate with the Integrator and the Owner’s phone and data systems suppliers to verify specific requirements and locations for voice and data jacks.

2.07 PRODUCT DATA

In accordance with Section 01300, the Contractor shall provide catalog cuts for all materials provided under this section.

PART 3--EXECUTION

Boxes shall be independently supported by galvanized brackets, expansion bolts, toggle bolts, or machine or wood screws as appropriate. Wooden plugs inserted in masonry or concrete shall not be used as a base to secure boxes, nor shall welding or brazing be used for attachment.

Receptacles and switches installed in sheet steel boxes shall be flush mounted. Flush mounted receptacles shall be located 18 inches above the floor unless otherwise indicated. Switch boxes shall be mounted 48 inches above the floor. Receptacles installed in cast device boxes shall be located 48 inches above the floor.

Wiring devices shall be tested for correct connections.

END OF SECTION

SECTION 16155

INDIVIDUAL MOTOR STARTERS

PART 1--GENERAL

1.01 DESCRIPTION

This section specifies individual motor starters and motor controllers installed in enclosures other than motor control centers. Refer to drawings for product, device, and circuit requirements.

1.02 REFERENCES

This section contains references to the following documents. They are a part of this section as specified and modified. Where a referenced document contains references to other standards, those documents are included as references under this section as if referenced directly. In the event of conflict between the requirements of this section and those of the listed documents, the requirements of this section shall prevail.

Unless otherwise specified, references to documents shall mean the documents in effect at the time of Advertisement for Bids or Invitation to Bid or on the effective date of the Agreement if there were no Bids.

If referenced documents have been discontinued by the issuing organization, references to those documents shall mean the replacement documents issued or otherwise identified by that organization or, if there are no replacement documents, the last version of the document before it was discontinued.

Where document dates are given in the following listing, references to those documents shall mean the specific document version associated with that date, regardless of whether the document has been superseded by a version with a later date, discontinued or replaced.

Reference	Title
NEMA ICS 1	General Standards For Industrial Control and Systems
NEMA 250	Enclosures for Electrical Equipment (1000-Volt Maximum)

1.03 SUBMITTALS

The following submittals shall be provided in accordance with Section 01300:

1. Verification of fault withstand ratings, as applicable, and interrupting ratings

2. The bill-of-material, schematic diagram, and wiring diagrams

PART 2--PRODUCTS

2.01 ENCLOSURE

The door to the motor starter enclosure shall be interlocked with an externally operated disconnect handle. Disconnect handle shall be arranged to indicate disconnect position. The disconnect operator handle shall have provisions to accept up to three 3/8-inch shackle padlocks to lock the disconnect in the open position.

Enclosures shall be:

1. NEMA 12 for indoor areas.
2. NEMA 4X for outdoor and process locations.
3. NEMA 7 cast metal for hazardous areas.

2.02 MOTOR BRANCH CIRCUIT PROTECTION

A. GENERAL:

Motor branch circuit protection shall be provided by fused disconnect switches or molded case motor circuit protectors as specified or as indicated.

B. FUSED DISCONNECT SWITCHES:

Fused disconnect switches shall be provided with visible knife blades, shielded line terminals and quick-make, quick-break switch operator. Fuse clips shall be Class R rejection type and sized for UL Class RK, one-time, time-delay fuses. Fuse assembly shall have a minimum short circuit capacity of 50,000 amps symmetrical.

C. MOLDED CASE MOTOR CIRCUIT PROTECTORS:

The motor circuit protector (MCP) type molded case circuit breaker shall only be used as a part of a combination motor starter.

The MCP shall operate on the magnetic principle with a current sensing coil in each of the three poles to provide an instantaneous trip for short circuit protection. The trip setting shall be adjustable over a range of 700 to 1300 percent of the full load current of the motor served and shall be adjustable from the front of the breaker.

The MCP circuit breaker shall be rated to interrupt 65,000 ampere symmetrical when used in conjunction with an individual motor starter.

2.03 MOTOR STARTERS

The basic full voltage, non-reversing motor starter (FVNR) shall consist of a 3 pole, 600 volt AC contactor, transient surge suppressor, and solid-state overload relay, NEMA Size-1 minimum. Reversing (FVR) and multispeed (2S2W) starters shall have additional contactors, overload relays and auxiliary relays as required for the specified functions.

The contactors shall comply with NEMA ICS and NEMA rated for the horsepower as specified.

Overload relays shall be adjustable solid-state with protection for each of the poles. An overload condition shall cause the overload relay to latch in the open position. Reset shall be accomplished with a reset button located on the unit door exterior. Trip setting shall be adjustable from 85 to 115 percent of rating. Provide a minimum of 2 Form-C 2-ampere auxiliary contacts for remote monitoring of the overload alarm condition. Refer to drawing schematics and P&ID diagrams to confirm quantity of contacts required for monitoring and control.

2.04 SOLID STATE STARTERS

The solid state reduced voltage motor starter shall consist of a self-contained unit for the control of 3-pole, 460-volt, 60-Hertz electric motors. The starter shall use solid-state components to limit current during motor starting and stopping. The starter shall include built-in bypass contacts operating closed when the motor is running at speed.

Controls shall permit selection among soft-start with selectable kickstart, current limiting with starting that is programmable 50 to 600 percent of full load current and field set as required. Full voltage start with ramp time less than 0.25 second, dual ramp start, or a start profile designed to reduce fluid surges when starting pumps. Controls shall permit field selection among ramp to stop, coast to stop, or stop profile designed for use with pumps.

Provide an alphanumeric, backlit LCD display. Example: four-line 16-character, for controller set-up, diagnostics, status and monitoring. Provide a keypad for parameter adjustment.

Provide motor overload protection with selectable trip classes of 10, 15, 20 and 30 utilizing three-phase current sensing, initially field set at 20 and field adjusted as required for the application by the Factory Engineer.

Provide a minimum of four 2-ampere, 240 Vac rated auxiliary contacts for customer use. Configure output contacts for: “Auto-Mode” status, “Ready” status, “Full-speed-Bypass” status, and “Fault” alarm. Provide for remote start command. Provide for remote stop command.

Provide the following monitoring functions indicated through the LCD display:

1. Three-phase current
2. Three-phase voltage
3. Power in kW
4. Power usage in kWh
5. Power factor
6. Elapsed time.

Provided as standard:

1. Pre-start line fault alarm
2. Running line fault advising power loss
3. Shorted or missing load connection
4. Pre-start power loss with phase indication

5. Over-temperature
6. Fault alarm with phase problem indication.

Provide the following defeatable protection as standard:

1. Under-load
2. Under-voltage
3. Over-load
4. Over-voltage
5. Voltage Unbalance
6. Excessive Starts Per Hour
7. Phase Reversal
8. Stall
9. Jam.

When fault conditions are detected, the controller shall inhibit starting or shut down. Fault diagnostics shall be indicated in descriptive text on the LCD display. The exclusive use of fault codes is unacceptable. Provide an auxiliary contact that is programmable for fault indication.

Manufacture and model:

1. ABB
2. Allen-Bradley Bulletin 150 SMC Flex
3. GE
4. Eaton - Cutler Hammer
5. Siemens
6. Square D
7. or equal

2.05 TERMINAL BLOCKS

Terminal blocks shall be heavy duty, rated at 20 amperes, 600 volts, and shall contain integral marking strips.

Terminal blocks shall be provided for external control connections. Spare terminals shall be provided as specified. Terminals shall be permanently identified with the numbers specified.

2.06 CONTROL DEVICES

Combination starters shall be provided with door-mounted control devices as shown on the diagrams. Control devices shall be as specified in Section 16175.

2.07 TRANSIENT SURGE SUPPRESSORS

Transient surge suppressors shall be provided in each starter. Suppressors shall be encapsulated, three component, solid-state circuit, in a module suitable for mounting directly to the starter coil. Additional space for suppressors shall not be required. Suppressors shall be rated 120 volts AC/DC.

2.08 CONTROL CIRCUIT TRANSFORMERS

Each combination motor control unit shall be provided with a control circuit transformer rated for 480 x 240-120V, single phase, 60 Hertz. Unless otherwise specified, transformers shall have a minimum volt-ampere rating as follows:

Starter	CPT Minimum Volt-Ampere Rating
Size 1	100
Size 2	150
Size 3	200
Size 4	300

The transformer size shall be increased if the devices applied will cause a control transformer overload or secondary terminal voltage to drop to or below 95 percent of rated secondary control voltage when rated primary voltage is applied. Each control transformer shall be mounted within the enclosure along with its associated circuit breaker and starter.

2.09 CONTROL CIRCUIT FUSING

Two primary fuses, rated to interrupt 200,000 amperes at 600 volts, shall be provided on all motor starters.

Each control circuit transformer shall be provided with one control circuit secondary fuse. The secondary fuse shall have an interrupting rating of 10,000 amperes at 250 volts. The secondary fuse shall be sized at 125 percent of full load current. Fuses shall have time delay characteristics as required to prevent false tripping due to coil in-rush currents.

Fuse holders shall be lamp indicating type for blown fuse indication and shall contain neon lamp, clear transparent knob, and solder terminals.

2.10 WIRING

Conductors shall be 90-degree C switchboard type. Conductors shall be identified with tag numbers as specified in 16000.

2.11 MANUAL STARTERS

Provide manual starters and motor rated switches with horsepower rated, quick-make, quick-break, toggle mechanism with overloads in each phase. Provide NEMA-12 enclosures indoor and NEMA-4X stainless steel enclosures outdoor, process areas, and corrosive areas. Provide label for power source and load as shown. Provide motor rated switches based on horsepower requirement of equipment. Provide Circuit Lock NEMA 4X disconnect switch in a 304 stainless steel enclosure with valox handle and collar. Hubbell HBL 13R92D for 30 amp circuits or approved equal in unclassified process areas. In classified areas, provide starter or switch with listed enclosure. Hubbell HBLB, Square-D 2510FR1 or approved equal.

2.12 NAMEPLATES

Nameplates shall be provided in accordance with the requirements of 16000.

2.13 PRODUCT DATA

The following product data shall be provided in accordance with Section 01300:

1. Operating and maintenance as specified in Section 01730.
2. Manufacturer's catalog data for all material provided under this section. The catalog data shall be assembled in a folder with each page clearly marked with the item and reference number to the specification.
3. MCP and solid-state overload rating selection data.
4. Product calibration and setup information.
5. A copy of the electrical diagrams in a plastic folder in the units.

PART 3--EXECUTION

3.01 DEVICE CALIBRATION AND TESTING

The Contractor shall size the overload relay heater elements or adjust the solid-state overload device to the actual nameplate full load amperes of the motor connected to the starter.

The Contractor shall adjust motor circuit protector to the lowest setting not causing false tripping.

The Contractor shall record the settings on each motor controller and record the settings as part of the Record As-Built drawing submittal.

3.02 MOUNTING HEIGHT

The Contractor shall mount local motor starters at 48 inches above the floor.

3.03 TESTING

Local motor starters and circuits shall be tested in accordance with Section 16030-Testing.

END OF SECTION

SECTION 16175

MISCELLANEOUS ELECTRICAL DEVICES

PART 1--GENERAL

1.01 DESCRIPTION

The vendor, manufacturer, and custom control panels shall provide enclosures, selector switches, pushbuttons, indicators, terminal strips, surge devices, nameplates, testing procedures, wiring method, wiring color coding, wire labeling, separation between power, controls, and instruments, hardwired logic relays or PLC logic products as specified herein and in Sections 16176 and 17310.

This section specifies electrical control and monitoring devices:

1. Control Devices:

    a. Pushbuttons
    b. Selector Switches
    c. Indicating Lights
    d. Control Station Enclosures

2. Control Relays:

    a. Load-Switching
    b. Logic Level Switching
    c. Timers and Time Switch
    d. Alternators

This section specifies power devices:

1. Magnetic Contactors:

    a. Lighting Contactors
    b. Motor Contactors

2. Safety Disconnect Switches

3. Manual starters per Section 16155 – Individual Motor Starters

4. Field Instrument and Field Analyzer: Key-Switch in control station with surge devices

5. Overcurrent Protection: Circuit breakers

6. Elapsed Time Indicators

7. Current transformers and transducers

8. Time Switch

9. Motor Driven Timers – On Delay and Off Delay

10. Intrusion Switches and Override Key Switches

11. Thermostats

12. Static Ground Indicator and Interlock System

Request clarification where conflicts occur with this section and other sections in Divisions 11, 15, 16 and 17.

1.02 REFERENCES

This section contains references to the following documents. They are a part of this section as specified and modified. Where a referenced document contains references to other standards, those documents are included as references under this section as if referenced directly. In the event of conflict between the requirements of this section and those of the listed documents, the requirements of this section shall prevail.

Unless otherwise specified, references to documents shall mean the documents in effect at the time of Advertisement for Bids or Invitation to Bid or on the effective date of the Agreement if there were no Bids.

If referenced documents have been discontinued by the issuing organization, references to those documents shall mean the replacement documents issued or otherwise identified by that organization or, if there are no replacement documents, the last version of the document before it was discontinued.

Where document dates are given in the following listing, references to those documents shall mean the specific document version associated with that date, regardless of whether the document has been superseded by a version with a later date, discontinued or replaced.

Reference	Title
NEMA 250	Enclosures for Electrical Equipment (1000 volts maximum)
NEMA ICS-1	General Standards For Industrial Controls and Systems
NEMA ICS-2	Industrial Control Devices, Controllers, and Assemblies
NEMA KS 1	Enclosed Switches

1.03 SUBMITTALS

The following submittals shall be provided in accordance with Section 01300 and Section 16176:

1. A copy of this specification section, with addendum updates included, and all referenced and applicable sections, with addendum updates included, with each paragraph check-marked to indicate specification compliance or marked to indicate requested deviations from specification requirements.

Check marks shall denote full compliance with a paragraph as a whole. If deviations from the specifications are indicated, and therefore requested by the Contractor, each deviation shall be underlined and denoted by a number in the margin to the right of the identified paragraph, referenced to a detailed written explanation of the reasons for requesting the deviation.

The Engineer shall be the final authority for determining acceptability of requested deviations. The remaining portions of the paragraph not underlined will signify compliance on the part of the Contractor with the specifications.

Failure to include a copy of the marked-up specification sections, along with justification(s) for any requested deviations to the specification requirements, with the submittal shall be sufficient cause for rejection of the entire submittal with no further consideration.

2. Arrangement drawings of the panel enclosure indicating the front door and panel equipment arrangement and dimensions, and enclosure type.

3. Nameplate legend with engraving and sizes.

4. Internal layout drawings showing all components.

5. List of materials and components with the layout drawings.

6. Elementary / schematic diagrams

7. Internal wiring connection diagrams.

8. External wiring interconnection diagrams including interlocks.

9. Power and control single line diagrams, where motor controllers are included.

10. Manufacturer's catalog data for all material provided under this section shall be assembled in a folder with each page clearly marked with the item model number and reference number to the specification.

PART 2--PRODUCTS

2.01 CONTROL DEVICES

A. PUSHBUTTONS:

Pushbuttons shall be flush head, heavy-duty, with NEMA rating to match enclosure type. Operators shall be green for start function, red for stop functions, and black for all other functions. The escutcheon legend shall be as specified on the drawings.

1. UL Listed.

2. Dielectric Strength: 1300 Volts for one minute for Logic Reed contacts, 2200 Volts for one minute for other contacts.

3. 30.5mm mounting hole.

4. Temperature operating range –10 degree C. to +55 degree C.

5. Momentary contact type

6. When switching circuits are monitored by programmable controllers or other solid state circuits, furnish hermetically-sealed, logic-reed type contacts rated not less than 0.15 amperes at 150 Vac and 0.06 amperes at 30 Vdc.

7. When switching circuits are not monitored by programmable controllers or other solid state circuits, furnish contacts with NEMA Utilization Category rating A600 rated not less than 10 amperes continuous and 6 amperes break at 120 Vac.

8. Emergency-stop pushbuttons shall be maintained-contact red-mushroom-head that stops the equipment. The Operator must pull out pushbutton, as one of the permissives to re-start the equipment. Pushbuttons designated "Lock-Out-Stop" (LOS) shall be provided with a padlock attachment to maintain the device in a depressed (stop) position.

Manufacturer: Allen-Bradley 800T/800H series or equal.

B. SELECTOR SWITCHES:

Selector switches shall be heavy-duty with NEMA rating to match enclosure type. Selector switches shall have maintained position contacts. Switches shall be provided with contact blocks and number of positions as required performing the specified or indicated operations.

The escutcheon legend shall be as specified on the drawings. Provide:

1. UL Listed.

2. Dielectric Strength: 1300 Volts for one minute for Logic Reed contacts, 2200 Volts for one minute for other contacts.

3. 30.5mm mounting hole.

4. Temperature operating range –10 degree C. to +55 degree C.

5. Standard knob operator (not lever type nor wing lever type)

6. Number of positions and contact configuration as shown on Drawings.

7. When switching circuits are monitored by programmable controllers or other solid state circuits, furnish hermetically-sealed, logic-reed type contacts rated not less than 0.15 amperes at 150 Vac and 0.06 amperes at 30 Vdc.

8. When switching circuits are not monitored by programmable controllers or other solid state circuits, furnish contacts with NEMA Utilization Category rating A600 rated not less than 10 amperes continuous and 6 amperes break at 120 Vac.

Manufacturer: Allen-Bradley 800T/800H series or equal.

Field instruments and field analyzers specified in Section 17200 – Instrument Index shall have a lock-out style selector switch for locking on or locking off the 120Vac power source. The selector switch shall use a control station in NEMA-12, 4, 4X, or 7 as required by the area classification. Provide O-Z/Gedney Class 441 with two position key-operated maintained contact switch. Provide surge protection device that matches the enclosure type of the power disconnect type control station, field instrument, or field analyzer: Telematic TP48 transmitter surge protection device or equal.

C. INDICATING LIGHTS:

Red, amber, green, and blue indicating lights shall be heavy-duty full voltage 120Vac or 24Vdc push-to-test LED type with NEMA rating to match enclosure type for installation in a 30.5mm hole. Furnish with 28 chip high visibility LED. The escutcheon and lens color shall be as shown on Drawings or scheduled.

White indicating lights shall be as above, incandescent type lamp.

Manufacturer:

1. Allen-Bradley 800H-QRTH10 series or equal for 120Vac applications with colors other than white.

2. Allen-Bradley 800HQRTH24 series or equal for 24Vdc applications with colors other than white.

3. Allen-Bradley 800H-QRT10 series or equal for 120Vac applications with white.

4. Allen-Bradley 800H-QRT24 series or equal for 24Vdc applications with white.

Indicating Light Lens Color:

Lens Color	Typical Function	Example
Red	Danger, running	Equipment operating, motor running, valve open, power voltage applied, cycle in automatic

Lens Color	Typical Function	Example
Amber	Fault condition, attention	Equipment failure, status abnormal
Green	Ready condition	End of cycle; unit or head returned; motors stopped; motion stopped; contactors open, valve closed
White or Clear	Normal condition	Normal pressure of air, water, lubrication, control power on, status okay
Blue	Advisory	Control mode not in automatic

D. CONTROL STATION ENCLOSURES:

1. Enclosures locations and ratings:

a. Indoors: NEMA 12

b. Outdoors and Corrosive areas: NEMA 4X stainless steel, or non-metallic in chlorine storage areas

c. NEC 500 Hazardous Areas: NEMA-7.

E. CONTROL POWER TRANSFORMERS:

1. Sized for the panel devices and products.

2. Dual primary and single secondary fusing.

2.02 CONTROL RELAYS

A. LOAD-SWITCHING CONTROL RELAYS:

Control relays used for switching loads such as solenoids, actuators, contactors, motor starter coils, remote interlocking, etc. shall be heavy-duty machine tool type.

Contacts shall be 4-pole and be field interchangeable to either normally-open or normally-closed. Relay shall be capable of accepting a 4-pole adder.

AC relays shall have NEMA A600 contact ratings and electrical clearances for 600 volts. DC relays shall have NEMA P300 contact ratings and electrical clearances for 250 volts.

Manufacturer: Allen Bradley Bulletin-700, Square D Class 8501, or equal.

B. LOGIC LEVEL SWITCHING CONTROL RELAYS:

Control relays for signal circuits shall have a minimum of three SPDT, gold-flashed, fine silver contacts rated 3-ampere resistive at 120V AC or 28Vdc.

Control relays shall be plug-in type with heavy-duty, barrier-protected screw terminal sockets and clear polycarbonate dust cover with clip fastener.

AC models shall have neon lamp indicator wired in parallel with coil. DC models shall have LED lamp indicator wired in parallel with coil.

Manufacturer: Potter Blumfield series KUP; Schrack Series RA; or equal

C. TIMERS:

1. Multi-function, micro-controller based, socket mounted timing relay.

2. Single functions:

   a. Delay on Make
   b. Delay on Break
   c. Recycle (on time first, equal recycle delays)
   d. Single shot
   e. Interval
   f. Trailing edge single shot
   g. Inverted single shot
   h. Inverted delay on break
   i. Accumulative delay on make
   j. Re-triggerable single shot

3. Dual functions:

   a. Delay on make/delay on break
   b. Delay on make/recycle (on time first, equal recycle delays.)
   c. Delay on make/interval
   d. Delay on make/single shot
   e. Interval/recycle (on time first, equal recycle delays)
   f. Delay on break/recycle (on time first, equal recycle delays)
   g. Single shot/recycle (on time first, equal recycle delays)
   h. Recycle – both times adjustable (on time first)
   i. Recycle – both times adjustable (off time first)
   j. Interval/delay on make
   k. Accumulative delay on make/interval

4. Time delay range, switch selectable:

   a. Single function 0.1 second to 1,705 hours in 8 ranges.
   b. Dual function 0.1 second to 3,100 minutes in 8 ranges.
   c. Setting accuracy +/- 1 percent or 50 milliseconds, whichever is greater.
   d. Repeat accuracy +/- 0.1 percent or 16 milliseconds, whichever is greater.

5. Output:

   a. Two Form-C electromechanical isolated contacts rated 10-amperes resistive at 240Vac
   b. Rated 1/3-horsepower at 120 or 240Vac
   c. Double-pole double-throw: DPDT.
   d. Mechanical life: 10,000,000 operations
   e. Electrical life: 1,000,000 operations at full load.

6. Mounting: Magnal Plug 11-pin socket

7. Environment: -20 to +65 degree C.

8. Manufacture:

   a. ABB / SSAC's multifunction type TRDU time delay relay with dip-switch function setting with 12Vdc, 24Vac, 120Vac, 240Vac inputs as required or indicated or equal.

D. TIME SWITCH:

Provide an electronic time switch with full-year control in a NEMA 3R enclosure. The switch shall incorporate a non-volatile memory that maintains programmed switching times for the life of the time switch and provide a factory installed field replaceable lithium or alkaline battery for time keeping and calendar information for a minimum of 8 years. Furnish with one single-pole, double-throw output switch rated 20-ampere at 240Vac. Furnish with manual override control.

Manufacturer:

1. Intermatic Model ET70115CR or equal.

2. Paragon Electric Company, Inc. EC71ST or equal.

E. ALTERNATING RELAY:

1. Alternate assignment between "Duty" and "Stand-by" at the end of each run cycle.

2. Double-pole, double-throw output relay rated for 7-amps inductive at 120-volts AC. Isolation not less than 1,500-volt RMS input to output. Life of 1,000,000 operations at full electrical load.

3. Switch to select alteration or continuous operation of either load.

4. Mount in Magnal 11-pin socket.

5. Operating temperature range of –20 to +60-degree C.

6. Manufacturer: ABB-SSAC type ARP series or Engineer accepted substitute.

F. MOTOR DRIVEN TIMERS- ON DELAY AND OFF-DELAY:

1. Time Delay Relay - Upon Energization (TDE) or Upon De-Energization (TDDE): TDE driven by a 120 Vac synchronous motor that starts timing when initiated by an external signal via closing a dry contact. Turn a knob on the front of the dial for time settings. TDE device will reset upon power failure. TDDE device will not reset upon power failure. Special configuration where specified: will not reset upon power failure.

2. Provide a pilot light visible from the front of the timer to indicate when the timer motor is energized. Provide visual indication by a cycle progress pointer that advances to zero from the setting then back to zero as time progresses.

3. Provide two of "instantaneous" NEMA Form-C output contacts that actuate when the timing is initiated. Provide two "delayed" NEMA Form-C contacts that actuate when the unit has timed out or de-energized. The timer automatically resets, when the timing cycle is completed. Contact ratings: 10-ampere at 120 Vac and 5-ampere at 240 Vac.

4. Permanently mount and setup the timer with the initial settings shown or specified. Timer range with 16 configurations from 5-seconds to 60-hours. Range and timer setpoints shown on drawings.

5. Timer Manufacturer: Eagle Cycl-Flex Automatic or Manual Reset Timer: HP5 series or HP5E series; Automatic Timing Controls, Series 305D Motor Driven Analog Reset; or equal.

2.03 MAGNETIC CONTACTORS

A. LIGHTING CONTACTOR:

Lighting contactors shall be 100 percent rated for ballast and tungsten lighting, resistance and other non-motor loads.

Contactor shall be rated 600Vac, 60-Hertz with the ampere rating and number of poles as indicated on the drawings. Provide a minimum of two poles per NEMA ICS 2-211B for industrial-duty applications.

The following options shall be available and shall be provided as indicated on the drawings:

1. Auxiliary contacts rated 5-amperes at 600Vac.
2. Timer or time clock attachment.
3. Transient suppression module for 120Vac control circuits.
4. Electrically or mechanically held as specified.

Contactors shall be provided with disconnecting means and overcurrent protection mounted in the same enclosure.

Manufacturers:

1. Allen Bradley Bulletin 500L or 500LP
2. Square D Class 8903
3. ASCO 918 Remote Control with control module
4. or equal.

B. MOTOR CONTACTORS:

Motor contactors shall be designed for continuous operation of induction motors at 600Vac or less at 60-Hertz and shall comply with NEMA ICS 2-210. Unless otherwise specified or indicated, minimum contactor size shall be NEMA Size-1.

Motor contactors shall be supplied with a normally open auxiliary contact for use as a hold-in-contact and status contacts with a minimum of two additional Form-C contacts. Provide 120Vac coil voltage and 60-Hertz frequency with the number of poles and auxiliary contacts as indicated.

Manufacturer: GE, ABB, Allen Bradley, Square D, Eaton-Cutler Hammer or equal.

Provide solid-state overloads relays with one alarm contact. Where specified and shown as E-SSOL, provide the electronic SSOL relay: Automatic Timing and Controls (ATC) Motor Guardian for alarming and tripping on under-current, over-current, single-phase, ground-fault, motor-jam conditions. Provide ATC current transformers and voltage connections.

Manufacturer: ATC Lancaster, PA. Model: Motor Performance Analyzer; or equal.

2.04 SAFETY DISCONNECT SWITCHES

Safety disconnect switches shall be heavy-duty, 30-400-ampere ratings as indicated, circuit breaker operating, fused or non-fused as indicated, stainless steel operator, safety type rated 600 volts AC.

Provide fusible disconnect switches with ratings as indicated with built-in fuse pullers. Provide LPS, LPN, or LPJ 200KAIC current limiting fuses as appropriate for the circuit type and the circuit voltage.

Enclosure locations and ratings:

1. Indoor enclosures: NEMA 12

2. Outdoor or corrosive areas: NEMA 4X stainless steel or nonmetallic for chlorine storage areas

3. Hazardous areas: NEMA 7

4. Classified areas: Suitable for the specified classification.

The operating handle shall be capable of being padlocked in the "off" position. The operator shall be a positive, quick-make, quick-break mechanism. Provide bolt-on hubs. Provide door lock. Provide nameplates with the equipment tag number, equipment description, and power source as indicated on the drawings. Submit nameplate list.

Switches shall be horsepower rated for motors and shall comply with NEMA KS-1. Switches shall be provided with defeatable door interlocks that prevent the door from opening when the operating handle is in the "on" position. Switches shall have line terminal shields.

Manufacturer: ABB, Cutler-Hammer, General Electric, Square-D, or equal.

2.05 OVERCURRENT PROTECTION

A. CIRCUIT BREAKERS:

Circuit breakers shall be thermal magnetic, molded case type with the ampere rating as specified. Unless otherwise specified or indicated, circuit breaker interrupting rating shall be 65,000 amperes symmetrical.

2.06 ELAPSED TIME INDICATORS

Elapsed time indicators shall be panel mounted, non-resettable, 5.5-digit, hour indicator, rated 120Vac, 60-Hertz.

2.07 CURRENT TRANSFORMERS AND TRANSDUCERS

Provide monitoring current transformers with 600Vac insulation and primary ampere rating as indicated with 5-ampere output.

Provide AC current transducer for any one of the phase conductors of the power circuit to be installed through onboard toroid. Provide a loop-powered transducer with input rated from 0 to 50-ampere with 4-20madc analog output scaled for the primary current of the current transformer. Provide zero and span adjustments.

Manufacturer: ABB AC current transducer TCSA Series Loop Powered and mounting accessories, or equal.

Provide a DIN rail or back plate mounted AC current transducer that is a loop-powered transducer with input rated from 0 to 5-ampere and with 4-20madc analog output scaled for the primary current of the current transformer.

Manufacturer: ABB AC current transducer DCSA Series Loop Powered and mounting accessories, or equal.

2.08 TERMINAL STRIPS, BLOCKS, AND DEVICES

1. Power Wiring: Provide back plate mounted terminal strips rated at 600 Vac.

2. Control Wiring: Provide a DIN rail with spring powered contact rated at 300 Vac 24 ampere with pluggable terminals.

3. Terminal identification standard to the product provided.

4. Manufacturer:

   a. Standard: Allen Bradley or equal.
   b. Standard: DIN rail: Phoenix Contact or Weidmuller Z-Series.

2.09 INTRUSION DEVICES

The intrusion switch shall be wide-gap industrial grade magnetic door switch with maximum gap 2.5 inches between the sensing elements. The magnet element shall be mounted on the moving part of the door. The sensor switch shall close when the door is closed. The sensor switch shall open when the door is opened. Provide with appropriate mounting bracket for the entrance doors.

Manufacturer: George Risk Industries - Series 4400 (800-445-5218), or equal.

The intrusion override key switches shall be access control type with mortise cylinder and 24 Vdc single pole double threw (SPDT) maintained contacts.

Manufacturer: Von Duprin SS-900 series.

2.10 THERMOSTATS

Thermostats shall be line voltage type with motor current rated contact and 70-degree to 140-degree Fahrenheit setpoint range.

Manufacturer: Honeywell T631A-1022 or equal.

2.11 STATIC GROUND INDICATOR

Provide a static ground indicator and interlock system for verification of static ground connection to plant equipment, tanker trucks, drums, containers with flammable liquids or powders that are transferred and requiring effective grounding and bonding .

Provide an explosion proof controller that meets NFPA 77 requirements with an intrinsically safe monitoring circuit that verifies a low resistant ground connection and dissipation path to ground. Product shall include an indicator light and interlock enabling product transfer and shall be rated for 120Vac power circuit.

Manufacturer: Earth-Rite Plus with Hytrel Cable and Ground Clamp or equal.

2.12 NAMEPLATES

Nameplates for all control stations, relays, timers, motor contactors and disconnect switches shall be provided in accordance with the requirements of Section 16000-2.02G.

2.13 ALARM BEACON

Alarm beacon shall be a 75-watt sealed-beam lamp with motor driven rotating reflector. Beacon shall be for 120-volt AC service and shall be Federal Signal Model 27S or equal; engineer knows of no equal.

2.14 HORN

Horn shall be a surface mount 120-volt AC enclosed buzzer and shall be Federal Signal Model WB350, Faraday Catalog No. 7410WB, or equal.

2.15 INTRINSIC SAFETY BARRIER

Intrinsic safety barrier shall be dual type to prevent grounding alarm circuit at the barrier. Barriers shall be Panalarm 201-BR2, MTL 787, or equal.

2.16 PRODUCT DATA

Operation and maintenance data as specified in Section 01730 including approved submittal manufacturer's catalog data, as-built drawings, and instructions for all configurable or programmable components.

PART 3--EXECUTION

Control stations, contactors and safety disconnect switches shall be mounted 48 inches above the floor, ground, or slab to center of device. Contractor shall coordinate panel devices with the requirements of other sections; including, Section 16176 – Local Control Panels, Section 17110 – Panels, Section 17900 – Control Specifications, and the equipment specifications in Divisions 11, 13, and 15.

Miscellaneous electrical devices shall be tested in accordance with Section 16000 and Section 16030.

Annunciator systems shall be mounted and connected in panels specified in Section 17110. Annunciators shall be tested as specified in Section 17200.

END OF SECTION

SECTION 16176

LOCAL CONTROL PANELS

PART 1--GENERAL

1.01 DESCRIPTION

A. SCOPE:

This section specifies local control panels used for housing electrical power and control equipment per Panel Schedule herein. Local control panels that include motor controllers and control devices/instruments shall be located in separate compartments.

Vendor and Manufacturer panels specification Sections are referenced in the Panel Schedule and specify specific requirement for these panel. Contractor custom panels are specified herein and shown on the drawings.

The Vendor / Manufacturer package equipment and Contractor custom field panels shall adhere to the requirements in specifications Sections 16155 and 16175 for motor starters, controllers, and devices and the circuits shall be arranged for Fail-Safe wiring and electrical operation, as defined hereinafter. Controls shall be configured where upon loss of power and return of power the system shall return to a ready state.

Refer to Instrument and Control Panels – Section 17110 for electronic types of panels that do not contain motor controllers.

Refer to Division 17 for instrumentation included in the panel. Refer to process equipment control descriptions in the Equipment Sections or in Division 17 for system operation and interlock requirements.

B. PANEL SCHEDULE:

Item	Panel No.	Spec / P&ID	Features *	Panel Type	Panel Title	Notes
1	VCP-2041	11128 / 20-I-604	V, 1, 4	NEMA-4X	Fine Screen 1 Control Panel	Outdoor
2	VCP-2042	11128 / 20-I-604	V, 1, 4	NEMA-4X	Fine Screen 2 Control Panel	Outdoor
3	VCP-2043	11128 / 20-I-604	V, 1, 4	NEMA-4X	Fine Screen 3 Control Panel	Outdoor
4	VCP-2050	11323/20-I-605	V, 1	NEMA-7	GRIT CLASSIFIER CONTROL PANEL	Class I, Div. 2 area
5	VCP-2121	15636/21-I-602	V, 1	NEMA-1	MAKE-UP AIR UNIT 1 CONTROL PANEL	Indoor
6	VCP-2122	15636/21-I-602	V, 1	NEMA-1	MAKE-UP AIR UNIT 2 CONTROL PANEL	Indoor
7	VCP-2140	15634/21-I-604	V, 1	NEMA-1	MEMBRANE AREA MAKE-UP AIR UNIT CONTROL PANEL	Indoor

Item	Panel No.	Spec / P&ID	Features *	Panel Type	Panel Title	Notes
8	VCP-2151	15634/20-M-601	V, 1	NEMA-1	OFFICE AREA MAKE-UP AIR UNIT CONTROL PANEL	Indoor
9	VCP-5060	11300/50-I-606	V, 1, 4	NEMA-4X	MBR INSTRUMENT AIR COMPRESSOR CONTROL PANEL	Outdoor
10	VCP-5110	11737/51-I-601	V, 1, 2, 3, 4	NEMA-4X	UV CHANNEL 1 CONTROL PANEL	Outdoor
11	VCP-5120	11737/51-I-601	V, 1, 2, 3, 4	NEMA-4X	UV CHANNEL 2 CONTROL PANEL	Outdoor
12	VCP-5141	11436/51-I-604	V, 1, 4	NEMA-4X	AIR COMPRESSOR CONTROL PANEL	Outdoor

V* - Vendor / Manufacture Panel per equipment specification requirements
C* - Contractor Custom Panel as shown
1* - Hardwired control logic
2* - Panel mounted Operator Interface Station (OIS)
3* - Programmable Logic Controller (PLC)
4* - Inner door for displays.

1.02 QUALITY ASSURANCE

A. REFERENCES:

This section contains references and information from the following documents. They are a part of this section as specified and modified. Where a referenced document contains references to other standards, those documents are included as references under this section as if referenced directly. In the event of conflict between the requirements of this section and those of the listed documents, the requirements of this section shall prevail.

Unless otherwise specified, references to documents shall mean the documents in effect at the time of Advertisement for Bids or Invitation to Bid (or on the effective date of the Agreement if there were no Bids).

If referenced documents have been discontinued by the issuing organization, references to those documents shall mean the replacement documents issued or otherwise identified by that organization or, if there are no replacement documents, the last version of the document before it was discontinued.

Reference	Title
NFPA 79	NFPA 79 Electrical Standard for Industrial Machinery
NEMA 250	Enclosures for Electrical Equipment (1000 Volts Maximum)
NEMA ICS 6	Industrial Control and Systems: Enclosures
NFPA 70	National Electrical Code (NEC)

Reference	Title
UL 508A	Industrial Control Panels
683.UL 698A	684.Industrial Control Panels Relating to Hazardous (Classified) Locations

B. ASSEMBLY:

The assembled panels and individual components shall be UL Listed and labeled.

Equipment and components shall be Underwriters Laboratory (UL) listed for the purpose per Section 16000 or UL recognized.

The control panels shall have factory applied UL 508A labels.

The intrinsic safety barriers required within a control panel shall be provide per UL 698A with factory applied labels as required by UL.

C. FACTORY TESTING:

Prior to shipment, test the functional operation of the panel, as shown on the drawings, specified in other Divisions, as described in the sequence of operation in the Control Description where provided in Division 17.

1.03 SUBMITTALS

The following submittals shall be provided in accordance with Section 01300:

1. A copy of this specification section, with addendum updates included, and all referenced and applicable sections, with addendum updates included, with each paragraph check-marked to indicate specification compliance or marked to indicate requested deviations from specification requirements.

   A check mark shall denote full compliance with a paragraph as a whole. If deviations from the specifications are indicated, and therefore requested by the Contractor, each deviation shall be underlined and denoted by a number in the margin to the right of the identified paragraph, referenced to a detailed written explanation of the reasons for requesting the deviation.

   The Engineer shall be the final authority for determining acceptability of requested deviations. The remaining portions of the paragraph not underlined will signify compliance on the part of the Contractor with the specifications.

   Failure to include a copy of the marked-up specification sections, along with justification(s) for any requested deviations to the specification requirements, with the submittal shall be sufficient cause for rejection of the entire submittal with no further consideration.

2. Arrangement drawings of the panel enclosure indicating the front door and panel equipment arrangement and dimensions, and enclosure type.

3. List of materials and components with the layout drawings.

4. Data on all materials and components.

5. Heat calculations.

6. Nameplate schedule with character size and nameplate size.

7. Submittal drawing required:

    a. Elementary/schematic diagrams.
    b. Internal wiring connection diagrams.
    c. External wiring interconnection diagrams including interlocks.
    d. Power and control single line diagrams, where motor controllers are included.

8. A copy of the contract document control diagrams and process and instrumentation diagrams relating to the submitted equipment, with addendum updates that apply to the equipment in this section, marked to show specific changes necessary for the equipment proposed in the submittal. If no changes are required, the drawing or drawings shall be marked "no changes required".

PART 2--PRODUCTS

2.01 GENERAL

Panels shall comprise cabinet enclosures with power products, control products, and instrumentation products as specified in Divisions 11, 13, 14, 15, Section 16175 and herein.

Provide:

1. Separation between the power components (over 120Vac) and the control / instrument components (120Vac and less) by locating the power components and the control / instrument components in separate sections of the cabinet enclosure.

2. Power cabinet section and the control / instrument cabinet section with separate door handles.

3. Separation between the power components and the control / instrument components using barriers.

4. External flanged, lockable circuit breaker handle for the main panel

disconnect. Breaker withstand rating shall be 65kAIC.

5. Individual power and control components with internal circuit breakers, as required.

6. Motor controllers, as required by the equipment specifications.

7. Displays with door-in-door construction accessible by opening the cabinet outer door.

8. Face-mounted equipment flush or semi-flush with flat-black escutcheons.

9. Panel tops of wall-mounted panels: mounted at the same elevation.

10. Panel inner door contains a copy of the record elementary and wiring diagrams.

11. Panel inner door contains a drawing holder.

12. Panel drawings enclosed in a transparent, protective jacket.

13. Panel functions as specified.

14. Panels with floor stands, to raise the top of the panel to 60 inches above the floor or work platform.

15. Wall mounting of panel weighs less than 100 pounds, where wall space is available,

16. Input and output signals as shown on the P&ID drawings for control and monitoring of the systems shall be provided. These signals shall be wired out to terminal blocks as specified.

2.02 ENCLOSURES

A. GENERAL:

Panel enclosures shall comply with the requirements of NEMA 250.

B. MANUFACTURER:

The enclosures shall be made by:

1. Hoffmann Enclosures, Inc.
2. Rittal.
3. or equal.

C. PANEL CLASSIFICATION:

Enclosures and Devices:

1. NEMA Type-12: Installed indoors shall be a modified NEMA 12 with:

   a. Piano hinge doors
   b. Breather drains
   c. Fans and filters
   d. Sealing washers for mounting hardware

2. NEMA Type-4X: Installed outdoors or in corrosive areas shall be a modified NEMA 4X stainless steel or non-metallic as shown with:

   a. Piano hinge doors
   b. Breather drains
   c. Sealing washers for mounting hardware
   d. Outdoor enclosures shall include sun shield on the panel's sides, back and top.

3. NEMA Type-7: Installed in Hazardous Areas shall be NEMA 7 with devices per NEC Article 500 requirements for the hazardous area classification.

D. SIZE:

The minimum enclosure area, height by width, shall be twice the sum of the area of the individual components mounted on the back panel. The enclosure depth shall depend on the type of components used but shall be no less than 6 inches.

E. COLOR:

Exterior: ANSI 61 grey; NEMA Type 4X stainless steel unpainted with smooth, brushed finish in indoor areas; provide white painted NEMA Type 4X enclosures for exterior installations.

Interior: White

2.03 HEATING AND VENTILATING

Enclosed cabinet manufacturer/supplier shall review the location of control panels and equipment to be installed in the cabinet in order to determine the required heating and cooling systems by heat load calculations. Sufficient heating and cooling systems shall be provided to produce an environment inside the cabinet, which meets all equipment/devices operating/installation requirements. At a minimum, forced air ventilation shall be provided for enclosed cabinets.

Fans shall be equipped with UL-approved washable filters and provide at least 240 cubic feet per minute (cfm). Noise level at 3 feet from exterior wall and 30 degrees off axis shall not exceed 60 NC units. Fans shall be thermostatically controlled.

Air-conditioners shall be provided where indicated. Supply voltage shall be as specified or as shown on the Drawings.

Closed loop systems will be used where ambient air is excessively hot, humid, dusty or contains other contaminants. Refrigerant shall be environmentally safe.

If required, panel air conditioning cooling requirements shall be a cooling system that does not exchange cabinet interior air with ambient air. The cooling system shall be either a closed glycol loop heat exchange system or a CFC-free refrigeration system as required for the specified equipment and instrument complement and ambient temperature conditions. Panel air conditioner shall be NEMA rated based on the installed area environment and the coils shall be Heresite, or equal coated and protected from corrosion. Air-conditioners shall be equipped with UL-approved washable filters.

Outdoor cabinets shall also be provided with thermostatically controlled space heaters. If space heater surface temperature exceeds 120 degrees F, an expanded metal guard shall be provided.

Thermostat manufacturer and model:

1. Hoffman A-TEMNO
2. Honeywell T631B1013
3. Penn Controls A28AA-4
4. Or equal.

2.04 PANEL WIRING

A. INTERNAL WIRING:

Internal wiring shall be single conductor 90 degree C copper wire and UL listed for panel wiring. Wire size shall be in accordance with NEC. Internal wiring shall be color coded as specified in Section 16000.

B. WIRE MARKERS:

Wire markers shall comply with the requirements specified in Section 16000.

C. WIRING METHODS:

Plastic wireway with covers shall be used to route groups of wires. Wireway fill shall be sized to provide 75% maximum fill. Plastic spiral wrap shall be used for exposed wires. Wires that cross door hinges shall be enclosed in plastic spiral wrap.

D. FAIL-SAFE WIRING

Fail-safe wiring of control relay or other on/off device or instrument provides the condition that will occur upon loss-of-power or internal failure in the device such that the relay is de-

energized in the failure or loss-of-power condition such that the control relay contact operation provides for equipment failing in a safe mode.

2.05 ALARM AND TROUBLE DETECTION

The equipment control system shall incorporate a non-energized, open-state, output contact to activate on an alarm or trouble condition or on loss-of-power. Detection of a critical alarm or trouble condition shall cause the control system to initiate the shutdown or the operation of the equipment's controlled components to achieve a "Fail-Safe" condition.

Devices that signal an alarm or a trouble conditions shall latch in the alarm position and require a manual reset at the equipment control panel.

Alarm and trouble output shall:

1. Open an output dry-contact.
2. Remain open until manually reset.
3. Not indicate abnormal condition when the equipment shutdown manually or automatically.
4. Indicate the alarm at the equipment control panel.

Fail-Safe Design and Operation:

1. Failure of part of a system shall not result in the failure of the rest of the system.
2. Failure of equipment or process shall not propagate beyond the failing device or equipment component.
3. Control design and operation shall prevent improper system functioning due to a circuit malfunction or operator error.
4. Control system design shall cause the controlled equipment to operate in a safe mode in the event of loss-of-power or the failure of a control system component.

2.06 CONTROL DEVICES

Control devices shall comply with Section 16175. Provide devices as specified herein and in accordance with specific equipment specifications.

The following is a MINIMUM, typical control device listing that shall be required for all systems:

1. HOA selector switch for each motor.

2. Start and stop pushbuttons for each motor.

3. Reset pushbutton(s)

4. E-Stop; maintained contact

5. Elapsed Time meter for each motor.

5. Status contacts (dry) for each of the following:

   a. HOA in Auto status
   b. Motor Run status
   c. Motor Fault status

2.07 INDICATING LIGHTS

Indicating lights shall be equipped with colored lenses as specified in Section 16175. Provide indicating devices as specified herein and in accordance with specific equipment specifications.

The following is a MINIMUM, typical control device listing that shall be required for all systems:

1. Provide status indicator lights for each motor (On/Off).

2. Fault indication(s).

3. Direction indicator lights for equipment as applicable (Forward/Reverse).

4. Control Power Indication.

2.08 SURGE PROTECTION

Surge protectors shall be provided at panel external terminal blocks signal circuits which extend to field devices. Surge protectors shall be Joslyn Model 1663-08, Taylor 1020FA, Transector, or equal.

2.09 TERMINAL BLOCKS

Terminal blocks shall be provided in accordance with Section 16000 and Section 16175. The terminal block assembly shall be mounted on channel standoffs. Provide 15 percent, but no less than 8, spare terminals available for future use.

2.10 LABELING AND NAMEPLATES

A. LABELING:

Panel components shall be labeled to match the description on the elementary diagram. Internal components of the panel on the back side of the door shall be labeled with the same description as provided on the front side.

Labeling shall be permanently marked on or near each component. Plastic embossed labels such as "Dymo" tape will not be accepted.

B. NAMEPLATES:

External door-mounted components and the panel description shall be identified with plastic nameplates provided in accordance with Section 16000.

Machine engraved laminated black phenolic nameplates with white lettering shall be provided for panel mounted equipment. Nameplate engraving shall be as specified and shall carry the instrument tag number in 3/32-inch minimum size lettering on the bottom line Nameplates shall be attached to the panel with a minimum of two self-tapping 316 stainless steel screws.

The supplier agrees that nameplate wording may be changed without additional cost or project time extension, if changes are during the submittal process and made prior to commencement of engraving.

Machine embossed metallic adhesive labels shall identify tag number of instruments inside panels. Nameplates shall be attached to panel surfaces, not to instruments.

2.11 GROUNDING

Panels shall be provided with two copper ground bars:

1. One bar bonded to the panel frame and to the station ground system, typically located in the power section.

2. Second (signal) ground bar mounted on insulated stand-offs and bonded to the frame ground bar at one point only, typically located in the control section and bonded to the signal ground bar:

    a. Signal circuits
    b. Signal cable shields
    c. Low-voltage direct current (24Vdc) power supply commons

Surge protectors and separately derived AC power supplies, such as 120Vac receptacles, shall be bonded to the frame ground bar. In panel line-ups exceeding 30-inches width, ground bars shall be 1/4- by 1-inch copper bars extending the entire length of the panel.

Neutrals of locally derived control circuits shall be grounded to the mounting plate using a copper bus or grounding lug.

Provide a grounding lug for a size No. 2 AWG bare copper conductor to connect the panel to the facility ground grid system.

2.12 PRODUCT DATA

The following information shall be provided in accordance with Section 01300:

1. Operations and maintenance information as specified in Section 01730.

2.13 SPARE PARTS

The following spare parts shall be provided:

1. Two spare fuses of each type fuse used.
2. Two spare relays of each type used.
3. Five spare pilot light bulbs of each type used.

PART 3--EXECUTION

3.01 GENERAL

Field verify the following:

1. Panel control circuits grounded with one terminal of each load device connected to the grounded conductor.

2. Panel signal and control wiring separated and installed in separate wireways with barriers between the power wiring and the signal and control wiring.

3. Panel connected to the plant grounding system as specified.

4. Panel tops of wall-mounted panels shall be mounted at the same elevation.

5. Panel inner door contains a copy of the record elementary and wiring diagrams.

6. Panel inner door contains a drawing holder.

7. Panel drawings enclosed in a transparent, protective jacket.

8. Panel functions as specified.

9. Panel mounted with stainless steel unistrut, fittings, and fasteners.

3.02 MOUNTING

Control panels supported directly by concrete or concrete block walls shall be spaced out not less than 5/8 inch by framing channel between instrument and wall. Sills shall be leveled so panel structures will not be distorted. Panels shall be shimmed to precise alignment so doors operate without binding and mounted where shock or vibration will impair its operation.

Support systems shall not be attached to handrails, process piping or mechanical equipment. Control panels supported directly by concrete or concrete block walls shall be spaced out from the wall to provide for air circulation around the panels.

Steel used for support of equipment shall be 316 stainless steel. Support systems including panels shall be designed to prevent deformation greater than 1/8 inch under the attached equipment load and an external load of 200 pounds in any direction.

Floor-mounted cabinets, except in dry control rooms or electrical equipment rooms, shall be mounted on 3-1/2-inch minimum height concrete pads or grouted bases as specified.

Panels shall be shimmed to precise alignment so doors operate without binding. Sealant shall be provided under panels not located in dry control or electrical equipment rooms.

Terminals and terminal blocks shall be sprayed with a silicone resin similar to Dow Corning R-4-3117 conformal coating, after all terminations and testing have been completed.

3.03 FACTORY TESTING

The control panel shall be assembled, interconnected, and functionally tested at the assembly shop prior to shipment.

The Owner/Engineer shall have the option of witnessing the functional shop test. The Contractor shall notify the Owner/Engineer at least 2 weeks in advance prior of the scheduled functional shop test.

3.04 FIELD TESTING

Panels shall be tested in accordance with Section 16030.

END OF SECTION

SECTION 16231

OUTDOOR STANDBY DIESEL-ENGINE GENERATOR

PART 1--GENERAL

1.01 DESCRIPTION

A. SCOPE:

This Section specifies the requirements for providing, factory testing, and on-site acceptance testing of complete and operable standby diesel engine driven generating system (GenSet) with an outdoor metal enclosure, belly tank fuel storage container, and the devices and equipment required for the system operation.

Refer to the Section 16310 and 16364 that specifies the generator control and synchronizing switchgear (SWGR) supply, custom features, factory tests by the generator manufacturer and the GenSet supplier, and shipping to the project site for installation.

The generator shall have two main breakers with kirk-key interlock with connections for:

1. One set of standby feeders to the SWGR.
2. One set of portable load bank lead connections.

The generation system shall include the following:

1. Digital control, monitoring, and display system
2. Cooling system
3. Belly tank
4. Exhaust silencer: mounted inside the enclosure.
5. Noise dampening mounting system.
6. Sound attenuated outdoor enclosure accessories.
7. Accessories: including batteries, battery charger, block heater with 120/208 Vac panelboard sized for the required lights, power outlets, battery charger, and block heater as required by the system and to meet these specifications.
8. Control system testing
9. Temporary Test Load Bank

10. Testing with load bank

B. OPERATING REQUIREMENTS:

The electric power generating system shall have ratings as indicated with 0.80 power factor, 480 volts, WYE connected generator, three-phase, four-wire, 60-Hertz, 1800 rpm and rated for Standby operation per NEC Article-701 or Article-702.

C. GENERATOR SET SCHEDULE:

Tag No.	Description / Location	Enclosure	Rating
GEN-9011	Diesel Fueled Generator Next to Treatment Facility	Outdoor	1000-kW, 3-Phase, 4-Wire
GEN-9012	Diesel Fueled Generator Next to Treatment Facility	Outdoor	1000-kW, 3-Phase, 4-Wire

1.02 QUALITY ASSURANCE

A. REFERENCES:

This section contains references to the following documents. They are a part of this section as specified and modified. Where a referenced document contains references to other standards, those documents are included as references under this section as if referenced directly. In the event of conflict between the requirements of this section and those of the listed documents, the requirements of this section shall prevail.

Unless otherwise specified, references to documents shall mean the documents in effect at the time of Advertisement for Bids or Invitation to Bid (or on the effective date of the Agreement if there were no Bids). If referenced documents have been discontinued by the issuing organization, references to those documents shall mean the replacement documents issued or otherwise identified by that organization or, if there are no replacement documents, the last version of the document before it was discontinued. Where document dates are given in the following listing, references to those documents shall mean the specific document version associated with that date, regardless of whether the document has been superseded by a version with a later date, discontinued or replaced.

Reference	Title
ANSI C57.13	Requirements for Instrument Transformers
IEC 34-5	Rotating Electrical Machines - Part 5: Degrees of Protection by Enclosures for Rotating Machinery
IEC 60529	Guidelines for Panel Testing
ISO	International Organization for Standardization
MG1	Motors and Generators

NEMA MG1	National Electrical Manufacturers Association Standards Publication MG-1
NEMA SG31	Low Voltage Power Circuit Breakers
NEMA SG51	Power Switchgear Assemblies
NFPA 37	National Fire Protection Association Standard 37, Standard for the Installation and Use of Stationary Combustion Engines and Gas Turbines
NFPA 70	National Electrical Code (NEC)
NFPA 110	Emergency and Standby Power Systems
OSHA	Occupational Safety and Health Act
SAE J 1349	Society of Automotive Engineers Engine Power Test Code
UL	Underwriters Laboratories Inc.

B. UNIT RESPONSIBILITY:

The Contractor shall assign unit responsibility, as specified in Section 11000, to the manufacturer of the GenSet provided under this section. This manufacturer is the unit responsibility manufacturer and has unit responsibility, as specified in Section 11000, for both the GenSet equipment assembly specified in this section and for the SWGR specified in Section 16310 and 16364. A completed, signed, and notarized Certificate of Unit Responsibility (Form 11000-C, Section 01999) shall be provided.

C. DESIGN REQUIREMENTS:

1. ENGINE:

a. RATING: Engine brake horsepower shall be sufficient to deliver full rated GenSet kW/kVA when operated at rated rpm and equipped with all engine-mounted parasitic and external loads such as radiator fans, fuel pumps, and cooling water pumps.

b. FUEL: Diesel engines shall be able to deliver rated power when operating on ultra low-sulfur No. 2 diesel fuel having 35 degree API (16°C, 60°F) specific gravity.

c. FUEL CONSUMPTION: Diesel fuel rates shall be based on fuel having a low heating value (LHV) of 42,780 kJ/kg (18,390 Btu/lb) when used at 29°C (85°F) and weighing 838.9 g/l (7.001 lb. / U.S. gal).

2. GENERATOR:

a. MOTOR STARTING: The generator manufacturer shall verify the size of the generator(s) to operate the proposed loads as shown on the single line drawings. The generator(s) shall be required to simultaneously start and run life safety, lighting and plant control systems loads. These loads are fed by Panelboards No. 1 & 2. These systems shall be picked up within 10 seconds of normal power failure. The generator(s) shall also be required to sequentially start and run the remaining 480V, 3-phase loads. The generator will pick up these loads without exceeding the maximum voltage dip and maximum frequency dip variations specified herein, or the maximum temperature limitations of the engine and generator. The entire facility shall

be connected to the standby power system within approximately 1 minute of normal power failure. All motor loads that are not identified as standby loads on the single line diagram shall be started/connected as shown. The supplier and manufacturer shall reference the drawings for further details.

b. GENERATOR PERFORMANCE: Voltage dip for motor starting shall not exceed 25% for any individual load step.

3. GENSET START TIME AND LOAD ACCEPTANCE: Engines shall start, achieve rated voltage and frequency, and be capable of accepting load within 10 seconds.

D. NOISE REQUIREMENTS AND CONTROL:

GenSet enclosure sound pressure level when GenSet is fully loaded shall be not greater than Level-2: 65 dBA at 7 meters (23 feet) from enclosure. Provide a sound attenuated, outdoor, weatherproof enclosure.

E. MANUFACTURER'S QUALIFICATIONS AND WARRANTY:

The complete power generation system shall be the product of one manufacturer who has been regularly engaged in the production of complete generating systems for at least twenty-five years.

The supplier shall be the engine-generating system manufacturer's authorized local representative that shall provide installation assistance, start-up services, and Owner's staff training. The supplier shall have 24-hour service availability with factory-trained technicians qualified to perform trouble-shooting, repairs on the system, and warranty compliance services. The supplier of the emergency generator system shall be authorized by the manufacture to complete all warranty on the complete emergency generator system, including the engine, generator, generator enclosure, and switchgear. Suppliers that employ third party companies to administer warranty services are not acceptable.

The GenSet supplier shall provide the following warranty that includes battery warranty:

Two year parts and labor with travel time included

F. MANUFACTURER FACTORY TESTING:

1. FUNCTIONAL TESTS: Functional testing of the complete power generation system final assembly shall be performed at the GenSet manufacturer's factory to assure proper system operation.

GenSet shall be load tested after the assembly is installed into the enclosure and operate continuously without stoppage for a period of 8 hours.

GenSet shall operate for one hour at ½, ¾, and full load, at 0.8 power factor or greater. Restart the test, if stopped for any reason.

2. PROTOTYPE TEST: The GenSet manufacturer shall certify that engine, generator, and controls have been tested as complete systems in accordance with NFPA 110 of representative engineering models (not on equipment sold).

3. SOUND TEST: Provide a GenSet factory test for sound pressure level measured in accordance with IEEE Standard 85, Test Procedure for Airborne Sound Measurement on rotating electrical machines. Refer to paragraph 1.02 for sound test criteria.

G. SHIPMENT, HANDLING, AND STORAGE:

The equipment shall be protected during shipment, handling, and storage per Section 01605.

1.03 ENVIRONMENTAL CONDITIONS

A. GENERAL:

The GenSet manufacturer shall verify that the diesel engine is correctly sized and is capable of driving the generator with all accessories in place and operating, at the generator's kW rating after derating for the range of temperatures expected in service and the project site altitude.

B: SEISMIC:

Equipment and supports shall be braced per Section 01900.

C. SITE CONDITIONS:

The site conditions are:

1. 40 degrees C maximum ambient

2. per Section 01800

3. Hydrogen sulfide environment

4. High humidity environment

5. Woodstock, Georgia; Wastewater Treatment Facility

1.04 SUBMITTALS

The following submittals shall be provided in accordance with the requirements of Section 01300.

1. A copy of this specification section, with addendum updates included, and all referenced and applicable sections, with addendum updates included, with each paragraph check-marked to indicate specification compliance or marked to indicate requested deviations from specification requirements.

Referenced and applicable sections to be marked up and submitted include:

a. Section 16310 Low Voltage Switchgear
b. Section 16364 Generator Control and Synchronizing Switchgear

A check mark shall denote full compliance with a paragraph as a whole. If deviations from the specifications are indicated, and therefore requested by the Contractor, each deviation shall be underlined and denoted by a number in the margin to the right of the identified paragraph, referenced to a detailed written explanation of the reasons for requesting the deviation. The Engineer shall be the final authority for determining acceptability of requested deviations. The remaining portions of the paragraph not underlined will signify compliance on the part of the Contractor with the specifications. *Failure to include a copy of the marked-up specification sections, along with justification(s) for any requested deviations to the specification requirements, with the submittal shall be sufficient cause for rejection of the entire submittal with no further consideration*

2. Completed Certificate of Unit Responsibility attesting that the Contractor has assigned, and that the manufacturer accepts, unit responsibility in accordance with the requirements of this Section and paragraph 11000-1.02 C. *No other submittal material will be reviewed until the certificate has been received and found to be in conformance with these requirements.*

3. Manufacturer and manufacturer's type designation.

4. Manufacturer's catalog and/or other data confirming conformance to specific design, material and equipment requirements including:

   a. ENGINE:

      1) Type, aspiration, compression ratio, and combustion cycle
      2) Bore, stroke, displacement, and number of cylinders
      3) Rotational speed, RPM
      4) Engine lubricating oil capacity
      5) Engine coolant capacity without radiator
      6) Engine coolant capacity with radiator
      7) Coolant pump external resistance (maximum)
      8) Coolant pump flow at maximum external resistance
      9) Exhaust back-pressure (maximum allowable pressure)
      10) Combustion air inlet flow rate
      11) Exhaust gas, flow rate, stack temperature
      12) Exhaust system back pressure (maximum)
      13) Heat rejection to:
         a. coolant
         b. aftercooler
         c. lube oil

d. exhaust
e. atmosphere

14) Fuel Consumption:
a. 50% load
b. 75% load
c. 100% load

15) Fuel supply system including belly tank and level alarm devices.

b. GENERATOR:

1) Model
2) Frame
3) Voltage
4) kW
5) Power Factor
6) Frequency
7) Insulation class
8) Number of leads
9) Weight, total
10) Weight, rotor

c. EFFICIENCY AT RATED VOLTAGE:

1) Efficiency at 0.8 power factor for 50% load.
2) Efficiency at 0.8 power factor for 75% load.
3) Efficiency at 0.8 power factor for 100% load.

d. RADIATOR:

1) Model
2) Type
3) Heat Rejection: BTU/Hour
4) Fan drive ratio
5) Coolant capacity, radiator
6) Coolant capacity, radiator and engine

e. GENSET WITH ENCLOSURE DIMENSIONS:

1) Dimensions: Length, width, height
2) Weight: dry and wet
3) Vibration isolators

f. POWER RATING: Nominal full capacity standby kW at 0.8 power factor and corresponding kVA rating

5. Exterior paint color chip for enclosure per paragraph 2.07 E.

6. Drawings:

   a. General dimensions drawings showing overall GenSet measurements, mounting location, and interconnection points for load leads, fuel, exhaust, cooling and drain lines.

   b. General dimension drawings for fuel supply and storage system including interconnection points, fuel and drain lines, and level and leak detection equipment, terminal-boxes and panels.

7. Wiring diagrams, schematics and control panel outline drawings published by the manufacturer in Joint Industrial Council (JIC) format for controls and switchgear showing interconnected points and logic diagrams for use by contractor and owner.

8. Provide load calculations based on approved submittal equipment loads. Load calculations shall include step load calculations with voltage, current and frequency steps.

PART 2--PRODUCTS

2.01 MANUFACTURERS

The Owner and Engineer believe the following candidate manufacturers are capable of producing equipment and/or products that will satisfy the requirements of this Section. This statement, however, shall not be construed as an endorsement of a particular manufacturer's products, nor shall it be construed that named manufacturers' standard equipment or products will comply with the requirements of this Section.

The candidate manufacturers include the following:

Equipment Manufacturer / Supplier	Engine-Generator	Control Panel
Manufacturer / Supplier 1	Caterpillar / Caterpillar	CAT EMCPIT
Manufacturer / Supplier 2	Cummins / Onan	Onan Power Command Amp Sentry Protection

2.02 ENGINE EQUIPMENT

A. GENERAL:

The engine shall be a single stationary, liquid cooled, 1800 rpm, four-cycle design, direct injection engine with forged steel crankshaft and connecting rods. Systems with dual engine-generators in one enclosure will not be permitted.

The engine cylinder block shall be cast iron with replaceable wet liners with four valves per cylinder. Provide 6, 12, or 16 cylinders engine with turbocharger and after-cool, as required by the GenSet manufacturer.

The GenSet engine shall not be manufactured with any Class I ozone depleting substances (ODS) as defined by Federal Register Vol. 57 No. 86. The GenSet shall be pre-certified EPA Tier 2 emission requirements.

The GenSet shall be in compliance with the local Air Pollution Control District (APCD) regulations. Certified test reports shall be furnished for APCD acceptance. Engine emissions shall meet or exceed the US EPA's applicable Tier standards and requirements for stationary, non-road diesel emission standards. The EPA Certification Level shall be based on the specific horsepower rating of the GenSet.

B. STRUCTURAL STEEL FRAME:

The generator, radiator, and engine shall be securely mounted on a heavy welded steel frame structure frame that is stiffened and cross-braced to provide a rigid mounting base.

C. ENGINE EQUIPMENT:

The engine shall be equipped with manufacturers standard air filters, fuel filters, pressure gauges, lubricating oil cooler, filters, and pressure gauge, water pump and temperature gauge, service hour meter, flywheel, and flywheel housing when applicable.

D. ENGINE FUEL SYSTEM:

1. FUEL/WATER SEPARATOR: A fuel/water separator shall be provided to protect the fuel system from water damage. The fuel water separator shall have provisions to change the filter element while the engine is operating.

2. FUEL LINES: Flexible fuel lines between engine and fuel supply shall be provided to isolate vibration.

3. FUEL SYSTEM MAINTENANCE: The fuel transfer pump, injection pumps, rack and pinion assembly, and timing mechanism shall be maintenance and adjustment free for the life of the equipment. The fuel filter shall not require changing more frequently than once per year. Provide a fuel filter with spill containment and catch pan for about three gallons of fuel.

E. GOVERNOR:

1. GENERAL: The engine governor shall control engine speed and transient load response. The governor shall be selected, installed, and tested by the GenSet manufacturer.

2. SPEED CONTROL: The engine governor shall be an electronic speed-control actuator. Speed droop shall be 0 (isochronous) from no load to full rated load.

3. FREQUENCY REGULATION: The steady state frequency regulation shall be within 0.25%. Speed shall be sensed by a magnetic pickup off the engine flywheel ring gear.

4. REMOTE SPEED CONTROL: A provision for remote speed adjustment shall be provided.

5. ACTUATOR: The forward acting actuator shall move to the minimum fuel position in the event of a DC power loss.

F. COOLING SYSTEM:

1. GENERAL: The engine jacket water cooling system shall be a closed circuit design with provision for filling, expansion, and de-aeration.

The cooling pump shall be driven by the engine. Auxiliary coolant pumps required for heat exchangers or separate circuit after-cooling shall be engine driven.

The cooling system shall tolerate at least 172 kPa (25 psi) static head. Coolant temperature shall be internally regulated to disconnect external cooling systems until operating temperature is achieved.

2. ENGINE MOUNTED RADIATOR: Heat rejected to the engine jacket water shall be discharged to the atmosphere through a close-coupled radiator.

3. COOLANT: The unit shall have an antifreeze / coolant mixture. The radiator shall cool the jacket water while the engine is operating at full site capability and 0.062 kPa (0.25 inch water column) external air restrictions.

Additional restriction affecting airflow shall not limit the radiator's capability to adequately cool at maximum site temperature. Provide air flow to meet ambient conditions at specified ratings at 100% rated connected load.

4. FAN AND BELT GUARDING: The fan, fan drive, and fan belts shall be covered with 14 gauge punched steel mesh guarding for personnel protection. The guarding shall conform to IEC 34-5, ISO and OSHA standards.

5. RADIATOR FAN: The radiator-cooling fan shall be a propeller type driven from the engine with the air drawn from the engine side and exhausted through the radiator core.

6. INLET AIR SYSTEM: The engine air cleaner shall be engine mounted with maintenance access. The maximum restriction to the combustion air inlet shall not exceed engine manufacturer requirements where external ducting provided.

G. EXHAUST SYSTEM:

1. GENERAL: The engine exhaust system shall discharge combustion gases safely and without leakage with minimum restriction. The critical sound silencer shall be designed for minimum restriction without excessive back-pressure.

Engine exhaust piping shall be Schedule 40 carbon steel type 321 or 316 with long radius 90 degree bends. Piping shall be installed with 9 inch minimum clearance from combustible material or incorporate appropriate insulation and shielding, as appropriate for

personnel safety. Provide a stainless steel flexible connection between the engine and exhaust piping.

Exhaust piping shall be supported and anchored to prevent weight or thermal growth being transferred to the engine. Flexible expansion fittings provided to accommodate thermal growth. Support dampers and spring isolators provided to isolate vibration.

Long runs of exhaust piping shall be pitched away from the engine and water traps installed at the lowest point. Provide a 1-inch diameter capped sample port for emissions testing. Provide ports 90-degrees apart on a straight section of exhaust piping.

Exhaust stacks shall be extended to avoid fumes and odors inside enclosure and installed to minimize noise.

2. SILENCER-CRITICAL: The silencer shall be residential quality**.** Silencer shall be fully-housed and enclosed.

2.03 THERMAL INSULATION WRAP

A. GENERAL:

Provide thermal insulation wrap or other acceptable method for insulating the hot surfaces on generator engines for personnel and structure safety.

B. SURFACES:

Hot surfaces within the enclosure to protect personnel and structure, as recommended by the manufacturer.

C. EXECUTION:

Provide thermal insulation blanket that is easily removed without damaging the blanket during maintenance or repair of the engine.

Stainless steel removable lacing shall be provided. The use of "hot rings" for binding edges or securing blankets is unacceptable.

2.04 GENERATOR SYSTEM

A. GENERATOR:

The generator shall be synchronous, four pole, revolving field, pre-lubricated bearing, air cooled by a direct drive centrifugal blower fan, and directly coupled to the engine with flexible drive discs.

The armature shall have skewed laminations of insulated electrical grade steel, two-thirds pitch windings. The rotor shall have amortissuer damper windings of layer-wound, mechanically-wedged winding construction. The rotor shall be dynamically balanced.

Insulation system components shall meet NEMA MG1 temperature limits for a Class H insulation system. Actual temperature rise measured by resistance method shall not exceed 125 degrees Centigrade to provide additional allowance for internal hot spots.

The generator insulation systems shall be suitably impregnated for operation in severe environments for resistance to sand and other air-born contaminants.

B. EXCITER:

A permanent magnet generator (PMG) shall provide excitation power to the automatic voltage regulator for immunity from voltage distortion caused by non-linear loads on the generator.

The PMG shall sustain field excitation power for optimum motor starting and shall sustain short circuit current for selective operation and coordination of system overcurrent devices.

The PMG exciter insulation systems shall be suitably impregnated for operation in severe environments for resistance to sand and other air-born contaminants.

C. VOLTAGE REGULATOR:

The automatic voltage regulator shall be temperature compensated, digitally controlled pulse width modulated solid-state design, and include over-voltage and over-current protection functions.

Over-voltage protection shall sense generator output voltage, In the event of regulator failure or loss of reference, the regulator shall shut down its output on a sustained over-voltage of one-second duration.

Over-excitation protection shall sense regulator output and shut down its output if overload exceeds ten seconds duration. Both over-voltage and over-excitation protection shall be latched, requiring the generator to be stopped for reset.

Generator output voltage shall be maintained within 1% of rated value for any load variation between no load and full load and drift no more than within 0.5% of rated value at constant temperature.

D. CIRCUIT BREAKER:

The generator mounted circuit breaker shall be mounted and connected in a guarded drip proof freestanding enclosure meeting, IEC 144 requirements and provided with adequate space for customer power cable lug connections. Cable lugs by supplier, refer to the electrical drawings for circuit conductor sizes and numbers.

Provide the following:

1. Molded case circuit breaker rated for 100% current, 3-pole, single-throw, stationary-mounted with manual operating handle, overload and short circuit trips, complete with cable lugs.

2. Circuit breaker shall be UL labeled and rated for 600-volt circuits and provided with a solid state over-current trip device, which shall include adjustable long time, short time and instantaneous trip adjustments.

3. Circuit breakers rated 1000-amperes and over shall have ground-fault protection.

4. A circuit breaker with a 24 Vdc shunt-trip unit wired to terminal board.

5. Three current transformers with 5-ampere secondary windings for the ammeter display, as needed.

6. National Electrical Code required working access space around the Circuit Breaker enclosure.

7. Circuit breaker shall be rated to interrupt a min. of 65,000 ampere symmetrical fault current.

2.05 ENGINE-GENERATOR SYSTEMS

A. ENGINE STARTING SYSTEM:

The engine starting system shall include 24 Vdc starting motor(s), starter relay, and automatic reset circuit breaker to protect against butt engagement.

Required cables furnished and sized for power feeder circuit requirements and capable of starting the specified engine within 10 seconds at the elevation and ambient environmental conditions specified herein.

B. WATER JACKET HEATER:

Jacket water heater(s) shall be provided to maintain coolant temperature of 32°C (90°F) while the engine not running. Heaters shall accept 240, 208 or 120 Vac single phase power and include thermostatic controls.

C. BATTERIES:

Batteries for GenSet starting and control shall be selected and supplied by the GenSet manufacturer. Battery warranty shall be the responsibility of the GenSet manufacturer. Batteries shall be protected from engine fuel leaks.

Batteries shall be maintenance free SLI lead acid type with through-partition connectors and mounted near the starting motor. Batteries shall be mounted on a corrosion resistant or coated steel battery rack close to the starting motor as practical and allow personnel access for inspection and maintenance.

Starting batteries shall be rated 24 Vdc with ampere-hour and ampacity sizing to provide minimum cranking amperes that includes the sizing requirements to allow for engine oil viscosity, ambient starting temperature, project elevation, and accessories. Batteries shall be capable of a minimum of four crank cycles (rolling) of the specified prime mover and have

sufficient current available for “break-away” currents for the particular engine used at the specified worse case temperature.

D. ALTERNATOR:

An engine-mounted belt-driven battery charging alternator shall be installed with an automatic voltage regulator. Alternator and regulator suitable for the application.

E. BATTERY CHARGER:

A dual rate 20-ampere battery charger shall be provided that shall accept 120 Vac single phase input to provide 24 Vdc output.

The battery charger shall be fused on the AC input and DC output, and incorporate current limiting circuitry to avoid the need for a crank disconnect relay. The charger shall be rated for operation at plus 50°C ambient. Charger voltage regulator shall be temperature compensated.

A voltage power switch shall be mounted on the face of the charger and shielded from accidental switching. The charger shall include an AC ammeter and voltmeter, a failure malfunction alarm switch, and be housed in an enclosure suitable for mounting inside the outdoor enclosure.

2.06 FUEL STORAGE SYSTEM

A dual wall subbase fuel tank shall be provided with adequate capacity to allow the diesel-generator unit to operate continuously to provide for the load as required in Section 1.02 for a minimum of 72 hours. The tank shall be constructed of coated steel with all access ports and vents located on the top horizontal surface. The tank shall be pressure and load tested according to UL 142 and shall be UL listed. The tank shall be capable of supporting the weight of the generator, isolators and enclosure, and shall have four lifting eyes capable of lifting the entire generator set package. Low level and leak detector float switches shall be provided, both wired to control panel alarm lights, dry contact output signals for each status, and a tank mounted fuel gauge.

The fill opening shall be equipped with a closure designed so that it may be locked and spill containment.

The generator’s concrete pad and subbase fuel tank total height shall be a min. elevation of 886.00 to ensure the top of the tank is out of the flood plain. Pad elevation is shown at 883.00. Provide additional pad height and/or tank height as needed.

2.07 OUTDOOR ENCLOSURE

A. GENERAL:

The acoustical enclosure shall house the engine generator and the auxiliary equipment required for the electric power generating system. The enclosure shall be a weather-protected sound attenuated enclosure complete with AC and DC lighting, convenience outlet, fire extinguisher and field electrical connection provisions and the following modification and features:

B. SOUND ATTENUATION ENCLOSURE:

The entire engine-generator assembly, including the battery, battery charger, control panel, and radiator shall be enclosed in an aluminum or galvanized steel enclosure suitable for an outdoor environment. The enclosure shall be a walk-in, weather protected, sound attenuated structure designed to reduce the generator set noise. Sound absorbing insulation shall be placed at the walls and ceiling with intake and discharge chambers insulated to restrict the transmission of generator set noise. The enclosure shall be designed for a minimum wind load of 100 mph, roof load of 50 pounds per square foot, and floor load of 200 pounds per square foot if equipped with a floor. The exhaust system shall not be supported by the roof of the enclosure.

Galvanized perimeter frame structure bracing shall allow the enclosure to be removed as a unit without disassembly. Provide crane lifting eyes where required to move enclosure. Provide peaked roof for rain runoff.

Provide fixed vane weather-proof acoustic intake louvers with hinged access and sized per the engine's cooling and combustion airflow requirements.

Provide interior workspace around both sides, and the rear of the generator. Provide NEC required 3-foot clear workspace in front of the generator circuit breaker and generator control panel. Interior walking platform shall be grating or plating all around the generator on the interior, top of the fuel tank and generator support structure to provide a level walking/working area.

Stairs and platform shall be provided from grade to the entrance of the generator enclosure where the elevation difference is greater than 1'-0" from final grade. Stairs and platform shall include safety rails. Materials shall be coated in accordance with Section 09900 or shall be aluminum to provide a corrosion resistant finish.

Contractor and generator supplier shall verify that the subbase fuel tank system and concrete equipment pad elevate the generator and fuel vents and all fill apparatus above the site's 100 year flood plane elevation. Generator pad height shall be adjusted as needed to place equipment above this elevation.

C. DOORS:

Enclosure shall contain four personnel outside entrance double-gasketed doors for entering the engine/generator compartment. Doors shall be fabricated from 14-gauge galvaneal with heavy duty continuous stainless steel piano hinge with stainless steel fasteners and pins.

Outside door latch mechanism shall be flush mounted and lockable. No hardware shall protrude beyond the perimeter of the enclosure to facilitate normal handling and shipping aboard container ships or by highway semi-tractor trailer.

D. SURFACE PREPARATION AND PAINTING:

Surface preparation and painting for the enclosure by the container manufacture shall be as follows:

1. Steel sheeting shall be galvanized steel.

2. Steel components shall be force dried and painted with a two-part epoxy primer and high gloss finish polyurethane topcoat.

3. Caulk open seams with a sealant to prevent rust seepage after painting.

E. EXTERIOR COLOR:

The enclosure exterior shall be painted a custom color as selected by the Owner. Manufacturer shall provide color chart to the Owner for selection; however, the Owner shall have the option to select a custom color. Custom colors shall be matched by manufacturer.

Submit exterior paint color chip for approval and provide one gallon of the same paint for touch up purposes to the Owner.

F. LIGHTING AND OUTLETS:

Three 24 Vdc light fixtures wired to a wall mounted 0-60 minute no-lock-on timer and connected to the battery system.

Provide four 120 Vac, twin tube T-8, four 4-foot fluorescent fixtures with magnetic ballast case rated at 90-degree C wired to two (one on each wall) wall mounted 0-60 minute spring wound timer switches with circuits from the GenSet distribution panelboard. Fixture shall be Holophane EMS or approved alternate.

Provide two wall mounted exterior wall pack type fixtures at entrance doors with photocell control. Fixtures shall provide a min. of 5 foot candles illumination at the entrances. Fixture shall be Lithonia TWF1 or approved alternate.

Provide two 120 Vac interior wall mounted duplex GFI receptacles and one 120Vac weather-proof exterior GFI receptacles with circuits from the GenSet distribution panel board.

G. INTERIOR ELECTRICAL REQUIREMENTS:

Provide an electrical power panel with one 100-ampere, 2-pole, main circuit breaker for incoming 120/208 Vac, 1-Phase, 3-wire, 60-Hertz. Install and factory wire the 12-circuit load center panel inside the enclosure for following loads:

1. Lights
2. Outlets
3. Fuel transfer pump, as required
4. Battery charger
5. Block heater
6. Jacket water heater
7. Motorized louvers (where specified herein)
8. Roof exhaust fan
9. Spares: 20-ampere 1-pole circuit breakers

H. FIRE EXTINGUISHERS:

Two 10-pound 4.5 kg carbon dioxide portable bottle type fire extinguishers shall be provided wall mounted within the GenSet enclosure.

I. ELECTRICAL CONNECTIONS:

The generator main circuit breaker shall be housed in a NEMA-12 gasketed metal enclosure installed within the enclosure. Provide a NEMA-12 gasketed terminal box for control and instrumentation wiring, separated from power connections, and show terminal box location in the submittal documentation.

J. VENTILATION:

Hinge the fixed vane intake louvers for access and size per the engine's cooling and combustion airflow requirements. Separate the intake louver from the exhaust louver.

Orient each louver to minimize superheating of the intake air. Use air directional acoustic barrier plates to mitigate sound escaping from the enclosure while not impeding airflow necessary for combustion and cooling. Install water separator to catch and drain of standing water on the louvers.

A sound insulated baffle shall be installed six inches below the opening of the fan and shall extend twelve inches beyond the fan opening.

K. SOUND ATTENUATION:

The enclosure shall be sound attenuated with composite sandwich construction of perforated metal enclosure either non-flammable mineral fiber or fiberglass. The interior wall surface shall be 20-gauge perforated aluminum metal construction.

2.08 CONTROLS

A. ENGINE-GENERATOR CONTROL PANEL:

The control panel shall be designed and built by the engine-generator manufacturer and mounted near the generator with vibration dampening mounting devices.

Provide a 100 percent solid state microprocessor based control circuitry, sealed dust tight, watertight modular components, and digital instrumentation. Provide IEC-IP52 or NEMA 12 enclosure ratings. Comply with IEC 60529 or NEMA standards for enclosure protection. Label the control panel with ISO symbols.

Display critical parameters such as operating hours, engine rpm, battery DC volts, oil pressure, jacket water temperature, including the specified engine and electrical parameters.

Control panel shall have a communications connection to the Main Switchgear for monitoring and control of the generator. This system shall allow the Owner to connect the control panel monitoring systems to the plant SCADA system via an Ethernet IP or Modicon TCPIP protocol. The following minimum signals shall be monitored:

1. Run status
2. Fault status
3. HOA switch, in Auto status
4. Fuel Tank Leak Alarm

5. Alarms (described below)
6. Metering (described below)

B. ENGINE MONITORING DEVICES:

Engine monitoring signals provided by engine mounted lubricating oil pressure and coolant temperature transducers shall communicated over a serial data link through a Data Sending Unit (DSU) to the control panel receiving module. The safety logic shall shut the engine down if the serial data link is lost.

C. CONTROL FUNCTIONS:

Provide control panel front mounted devices such as generator voltage control device, ammeter/voltmeter phase selector switch, control selector switches, and pushbuttons. Provide control and monitor devices identified and labeled with ISO symbols.

Provide start-stop logic for cycle cranking and cool down operation and red-mushroom head emergency-stop maintained pushbutton.

D. CONTROL WIRING:

GenSet control wiring: Number 16 AWG stranded wire and control panel ground wire Number 12 AWG with green and yellow striped insulation rated. Conductors shall be rated 90°C 600 Vac insulation with UL or CSA listing.

Provide wire identification on the conductor 6-inches from the terminal and protect wire from sharp bends and metal edges.

Provide four sets of Form-C dry contacts rated at 2 amps for remote customer alarming.

E. ALARM AND SHUTDOWN CONDITIONS:

Indicate the following alarm and shutdown conditions and provide a RESET device to clear fault:

1. Low oil pressure: pre-alarm
2. High engine temperature: pre-alarm
3. Low engine temperature: pre-alarm
4. Low fuel: pre-alarm
5. Low battery DC voltage: pre-alarm
6. Generator output circuit breaker (trip or off): alarm
7. Generator overload: alarm
8. Low oil pressure: shutdown
9. High engine temperature: shutdown
10. Low coolant level: shutdown
11. Over-crank: shutdown
12. Over-speed: shutdown
13. Over-voltage: shutdown
14. Under-voltage: shutdown
15. Under-frequency: shutdown

16. High battery voltage alarm
17. Low battery voltage alarm
18. Normal battery voltage indication
19. Battery charger malfunction alarm
20. Spare (2): alarm and shutdown

F. METERING:

Provide digital metering with 0.5% accuracy.

Provide true RMS indication that includes the total harmonic voltage and current content:

1. Voltmeter
2. Ammeter
3. Frequency meter
4. Phase select switch
5. Running time

G. ALARM MODULE:

Provide integral digital alarm annunciator for indication and audible alarm per NFPA Standard 110 on the engine-generator control panel. Provide lamp test switches, alarm horn silence-button, and first-out alarm detection.

2.09 PRODUCT DATA

The following information shall be provided:

1. Certified factory test results.

2. Operation and maintenance information as specified in 01730. In addition the following:

   a. Operating instructions with description and illustration of engine and generator controls and monitors.

   b. Manuals that illustrate and list assemblies, subassemblies and components, except the standard fastening hardware.

   c. Preventative maintenance instructions for daily, weekly, monthly, biannual, and annual maintenance requirements. Include a lubrication chart for all components.

   d. Routine test procedures for electronic and electrical circuits including the generator.

   e. Troubleshooting chart covering the complete GenSet with a description of trouble, probable cause, and suggested remedy.

f. Recommended spare parts list showing consumables anticipated during routine maintenance and test.

g. Wiring diagrams and schematics showing function of electrical components.

h. Complete final submittals including Record As-Built drawings.

i. Manuals and books described above shall be contained in rigid plastic pouches.

3. Training certification Form 11000-B specified in paragraph 16231-3.03.

4. Field test reports as specified.

5. Warranty verification statements published by manufacturer.

6. Location and description of supplier's parts and service facility including parts inventory and number of qualified GenSet service personnel.

7. Installation requirements showing clearances required for maintenance purposes: Access to main breaker, oil fill line, fuel fill line, etc.

PART 3--EXECUTION

3.01 INSTALLATION

A. GENERAL:

The GenSet shall be installed and connected in accordance with manufacturer's recommendations and the installation shall be certified on Form 11000-A as specified in Section 01999.

Verify the equipment pad is sized for the GenSet size per submittal information, level, with ground pad installed.

B. SIGNS:

Provide NEMA MG1-22.61 GenSet nameplate. Provide laminated equipment, device, and panel nameplates per specification Section 16000.

Provide one nameplate with minimum ½-inch lettering per NEC 701.7 for Contractor installation on the Service Entrance Equipment: "Standby Generator located describe_____".

Provide placarding in accordance with U.F.C. Standard 79-3, identifying the material in the storage tank. (Diesel 2-2-0) U.F.C. 7902.1.3.

Signs shall be posted in storage areas prohibiting open flames and smoking in accordance with U.F.C. 7902.1.3.1.

C. CONDUIT TRANSITIONS AT SLAB:

Connection from underground conduits to GenSet equipment shall transition via PVC coated flexible steel conduits. Loose or open cabling will not be permitted.

D. PROTECTION POST BARRIERS:

Provide a minimum 4-inch diameter concrete filled 36-inch high posts around the GenSet. Post shall be removable with locking pin device to keep in place. Provide post at each corner within 3-feet from the enclosure and with 3-feet between posts.

3.02 FIELD INSPECTION AND TESTING

A. PRE-DELIVERY INSPECTION:

Provide a pre-delivery inspection performed by the system manufacturers' local dealer at the dealer's facility to insure no damage occurred in transit. Verify GenSet components, controls, and electrical equipment is included as specified herein. Verify the NEC work access to electrical power equipment and control equipment is provided as specified.

B. PRE-DELIVERY SUPPLIER FACILITY TESTING:

Prior to delivery of the GenSet to the project site, test the GenSet to verify it is free of defects, starts automatically, and carry full load. Test shall be performed at the facility of the system manufacturer's authorized supplier.

The testing shall be done on dry type, resistive load banks capable of precise incremental loading. Salt water brine tanks or load banks requiring water as a source of cooling will not be allowed.

Provide separate test grade instrumentation to monitor the GenSet using the load bank. The GenSet monitoring instruments shall be read and compared to the amperage and voltage on each phase. Both readings shall be recorded and compared in the test report.

C. PRE-DELIVERY TESTING PROCEDURE:

Provide a pre-delivery test and operation that includes the SWGR setup, test, and operation performed by factory trained technicians with test equipment, facilities, and consumables provided by the supplier.

Owner representative shall be scheduled to witness all tests. The test shall be performed on the complete fabricated GenSet within sound attenuated enclosure.

1. Check electrical, exhaust, fuel and water connections for proper size, continuity and tightness of fittings.

2. Check fluids for appropriate levels and jacket water heater operation.

3. Correct defects during the test at no additional cost to the Owner prior to shipment to the job site.

4. Connect a 100 percent rated resistance load bank equivalent to the nameplate rating at unity power factor.

5. The GenSet shall be run for 1.5 hours during first initial run for proper engine break-in, (0.5-hour no-load, 0.5-hour at 50 percent rated load, 0.5-hour at 75 percent load) then 100 percent for 2 hours, or similar manufacturer recommended test operation sequence.

6. The test period shall extend until oil and water temperatures have stabilized for a period not less than 30 minutes.

7. Maintain test records at fifteen minute intervals to record water temperature, fuel pressure, oil pressure, ambient air temperature, voltage, amperage, frequency, kilowatts and power factor.

8. Test safety devices using methods recommended by the manufacturer.

9. Test results shall be documented and submitted for approval.

10. Setup the control system to allow engine to cool before shutdown.

D. ON SITE POST-INSTALLATION TESTING:

Following installation, the following tests shall be performed by the system manufacturer's qualified representative in the presence of the Owner's representative.

Pre-start Checks:

1. oil level
2. water level
3. day tank fuel level
4. battery connection and charge condition
5. engine to control interconnects
6. GenSet intake/exhaust obstructions
7. engine room ventilation obstructions
8. removal of all packing materials

E. FIELD TESTS:

The GenSet field test shall be performed by factory trained technicians at the project site with test equipment, facilities, and consumables including fuel and lubricants provided by the supplier. Provide a full tank of diesel fuel when the testing is completed and the GenSet is available for operation.

Owner’s representatives shall witness the field tests. Contractor shall provide to the Engineer written notice of the date field testing will commence a minimum of two weeks prior to that date.

The following field tests shall be conducted:

1. Check electrical exhaust, fuel and water connections for proper size, continuity and tightness of fittings.

2. Check fluids for appropriate levels and jacket water heater operation.

3. Start-up engine and make initial start-up check of operational equipment.

4. Upon completion of initial start-up and system checkout, schedule the witnessed field test to demonstrate load carrying capability, stability, voltage and frequency.

5. Operate the GenSet for l-hour for proper engine break-in and record water temperature, fuel pressure, oil pressure, ambient air temperature, voltage, amperage, frequency, kilowatts, and power factor.

6. Operate a minimum of 4-hours under full load with consumables necessary for testing furnished by the bidder.

7. Return to normal power source and test the SWGR transfer from normal power to standby power and the SWGR monitoring functions by simulating the loss of normal power source.

8. Test the SWGR initiated "GenSet Start" condition with the load bank.

9. Run the generator for test duration; monitor the oil and water temperatures and record readings every fifteen minutes.

10. Test the GenSet safety devices using methods recommended by the manufacturer.

11. Setup the unloaded run at the conclusion of the test and the retransfer to normal power to allow engine to cool before engine shutdown.

12. Notify the Owner’s representative of problems and the mitigation plan.

13. Submit the formal Test Results Report for approval.

3.03 TRAINING

The Contractor shall contract with the GenSet manufacturer to provide 8-hours of training. Arrange and schedule the training with the Owner.

Training shall include the requirements of Section 01664 and the following:

1. Operational information for the specific equipment provided.

2. Operation of the equipment in automatic and manual modes.

3. Troubleshooting.

4. Routine maintenance.

Training shall be certified on Form 11000-B as specified in Section 01999.

END OF SECTION

SECTION 16310

LOW-VOLTAGE SWITCHGEAR

PART 1--GENERAL

1.01 DESCRIPTION

This section specifies switchgear rated 600 volts, 3 phase, 60 Hertz for power distribution with drawout circuit breakers and associated electrical metering. Switchgear shall be designed and assembled in accordance with UL 1558.

1.02 QUALITY ASSURANCE

A. REFERENCES:

This section contains references to the following documents. They are a part of this section as specified and modified. Where a referenced document contains references to other standards, those documents are included as references under this section as if referenced directly. In the event of conflict between the requirements of this section and those of the listed documents, the requirements of this section shall prevail.

Unless otherwise specified, references to documents shall mean the documents in effect at the time of Advertisement for Bids or Invitation to Bid (or on the effective date of the Agreement if there were no Bids). If referenced documents have been discontinued by the issuing organization, references to those documents shall mean the replacement documents issued or otherwise identified by that organization or, if there are no replacement documents, the last version of the document before it was discontinued. Where document dates are given in the following listing, references to those documents shall mean the specific document version associated with that date, regardless of whether the document has been superseded by a version with a later date, discontinued or replaced.

Reference	Title
ANSI C37.20	Switchgear Assemblies Including Metal Enclosed Bus
ANSI C37.13	Low-Voltage Power Circuit Breakers
UL 1558	Metal-Enclosed Low-Voltage Power Circuit Breaker Switchgear
ANSI C57.13	Requirements for Instrument Transformers

B. FACTORY TESTS:

After assembly, switchgear shall be tested for operation at the specified voltage and current ratings. The main circuits shall be given a dielectric test of 2200-Volts for 1 minute between live parts and ground, and between opposite polarities. The wiring and control circuits shall be given a dielectric test of 1500-Volts for 1 minute between live parts and ground.

Instrument transformers shall have ratio and phase angle tests made in conformance with ANSI C57.13. Three copies of test results shall be submitted.

1.03 SUBMITTALS

The following submittals shall be provided in accordance with Section 01300:

1. A copy of this specification section, with addendum updates included, and all referenced and applicable sections, with addendum updates included, with each paragraph check-marked to indicate specification compliance or marked to indicate requested deviations from specification requirements. A check mark shall denote full compliance with a paragraph as a whole. If deviations from the specifications are indicated, and therefore requested by the Contractor, each deviation shall be underlined and denoted by a number in the margin to the right of the identified paragraph, referenced to a detailed written explanation of the reasons for requesting the deviation. The Engineer shall be the final authority for determining acceptability of requested deviations. The remaining portions of the paragraph not underlined will signify compliance on the part of the Contractor with the specifications. *Failure to include a copy of the marked-up specification sections, along with justification(s) for any requested deviations to the specification requirements, with the submittal shall be sufficient cause for rejection of the entire submittal with no further consideration.*

2. A copy of the contract document control diagrams and process and instrumentation diagrams relating to the submitted equipment, with addendum updates that apply to the equipment in this section, marked to show specific changes necessary for the equipment proposed in the submittal. If no changes are required, the drawing or drawings shall be marked *"no changes required"*. *Failure to include copies of the relevant drawings with the submittal shall be cause for rejection of the entire submittal with no further review.*

3. Manufacturer's data indicating interrupting, withstand and continuous current ratings of all equipment and components.

4. Dimension and rating data.

5. Instrument transformer test results.

PART 2--PRODUCTS

2.01 MANUFACTURERS

The Owner and Engineer believe the following candidate manufacturers are capable of producing equipment and/or products that will satisfy the requirements of this Section. This statement, however, shall not be construed as an endorsement of a particular manufacturer's

products, nor shall it be construed that named manufacturers' standard equipment or products will comply with the requirements of this Section. Candidate manufacturers include:

1. Eaton
2. Square D
3. ASCO
4. or equal

2.02 MANUFACTURE

Materials specified are considered the minimum acceptable for the purposes of durability, strength, and resistance to erosion and corrosion. The Contractor may propose alternative materials for the purpose of providing greater strength or to meet required stress limitations. However, alternative materials must provide at least the same qualities as those specified for the purpose.

A. ENCLOSURE:

Switchgear shall be factory assembled and metal enclosed. Each unit shall consist of a stationary structure assembly and one or more air circuit breaker units, disconnecting devices, and other specified equipment. Each unit shall be provided with a breaker hoist for removing the breaker for maintenance. The breaker hoist shall be mounted on the top of the structure.

B. STATIONARY STRUCTURE:

Stationary structure shall be a self-contained steel unit housing one or more individual breakers or instrument compartments and a rear compartment for buses and outgoing cable connections.

Structure shall be provided with removable steel plates on the top and sides, and each breaker compartment shall be equipped with primary and secondary contacts, rails, and stationary levering mechanism.

Structures shall be provided with horizontal and vertical barriers to separate different voltage classes, buses and cables:

1. Separate different voltage classes.
2. Separate bus compartments from cable compartments.
3. Separate cable compartments between vertical sections.

Structure shall be provided with a rear hinged cover for each cable compartment and a front hinged door for each breaker and metering compartment.

C. FINISH:

Unless otherwise specified, electrical equipment shall be painted by the manufacturer as specified in Section 16000 that references Section 09900 – Coating Systems.

2.03 BUS BARS

A. GENERAL:

Buses shall be tin-plated copper and shall be insulated where accessible to installer or maintenance personnel.

B. MAIN BUS:

Main horizontal bus shall extend through all sections of the switchgear with vertical connections to circuit breakers in each section.

Main bus shall have a continuous rating at least equal to the main circuit breaker and shall be braced to withstand stresses resulting from the maximum short-circuit current available. Minimum bracing shall be 100,000 amperes symmetrical.

Buses shall be mounted on heavy-duty glass polyester supports, and main bus joints shall be tin-plated and bolted using a minimum of two bolts.

Shipping splits and provisions for future bus extensions shall have silver-plated bolted connections.

Switchgear units will be connected single ended or double ended as specified. Double ended units shall be two single ended units connected by bus duct and a tie breaker.

C. NEUTRAL BUS:

Neutral bus, when specified or indicated, shall have the same capacity of the main bus.

D. GROUND BUS:

A ground bus having a momentary rating at least equal to the highest momentary rating of any circuit breaker in the assembly shall extend the length of the bottom of the switchgear. Each end of the ground bus shall be provided with clamp type terminals for No. 4/0 bare copper ground wire.

2.04 CIRCUIT BREAKERS

A. GENERAL:

Breaker element shall consist of a three-pole electrically operated with solid state overcurrent trip device, arc quenchers, manual stored energy closing mechanism, mechanical pushbutton trip and position indicator. Breakers shall be individually mounted, drawout, listed for 100 percent continuous ampere rating as shown on the drawings.

Breakers shall have a minimum interrupting current of 100,000 amperes symmetrical RMS at 480 Vac. Breaker element shall be suitable for mounting on the drawout mechanism in the circuit breaker compartment. Electrically operated circuit breakers shall be capable of operating on 24 to 125 VDC control power.

Provide a breaker test circuit appliance and device.

B. DISCONNECTING DEVICES AND DRAWOUT MECHANISM:

Disconnecting devices shall be the self-aligning type with the disconnecting fingers mounted on the breaker. The drawout mechanism shall rigidly hold the circuit breaker in the fully connected, test, and fully disconnected positions. Interlocks shall be provided to prevent moving the circuit breaker from the fully connected, test, or fully disconnected positions unless the breaker is open. Interlocks shall also prevent closing the breaker between any of these positions. Provide a stored energy mechanism with maximum five-cycle closing.

The drawout mechanism shall be designed so that the breaker can be racked to any position without opening the door. A hasp on the breaker escutcheon shall be provided that can receive three padlocks when the breaker is in the open position.

Breakers shall be provided with mechanical and electrical operation. Provide front-mounted, spring-charging handle, mechanical closing breaker handle and escutcheon-mounted pushbuttons for the main, tie and generator breakers. Feeder breakers shall be provided with escutcheon-mounted pushbuttons. Provide mechanical trip, escutcheon mounted, trip pushbutton handle. For electrical operation, provide motor or solenoid automatic charging, plus manual charging. Electrically closing, escutcheon mounted pushbutton with mechanical closing upon loss of control power. Provide electrical trip, escutcheon mounted, trip pushbutton.

Provide color coded visual indicators: Contractors OPEN and CLOSED, plus mechanism CHARGED and DISCHARGED.

C. AUXILIARY SWITCHES:

Breakers shall be equipped with four normally open and four normally closed auxiliary switches or eight-Form-C contacts rated 10 amperes, 120 volts, and wired to terminal blocks.

Breakers shall be equipped with 30 mm maintenance switches for arcflash reduction. Provide mode selector switch with cover, indicator light and battery holder.

Provide KNOX 4500 Series or approved alternate shunt trip switch to remotely open all power sources to the switchgear.

D. SOLID STATE TRIPPING DEVICES:

Solid state tripping devices shall consist of current sensors logic assembly, magnetic latch release, and required interconnecting wiring. Tripping devices shall be automatic and self-contained within the breaker frame, and shall not require any external relaying or power supplies.

Tripping device shall be provided with manually resettable fault indicators. As a minimum, fault indicators shall provide indication of tripping caused by overload, short circuit or ground fault. Field installable rating plugs shall be interlocked with tripping mechanism.

Tripping functions shall be field adjustable rating plugs and shall provide, as specified, the following tripping characteristics: selective coordination time/current curve shaping adjustable functions:

1. OVERLOAD TRIPPING:
   a. Adjustable ampere setting
   b. Adjustable long-time delay
   c. Provide phase current sensors

2. SHORT CIRCUIT TRIPPING:
   a. Adjustable short-time pickup
   b. Adjustable short-time delay
   c. Adjustable instantaneous pickup
   d. Long-time pickup LED indicator and test receptacle
   e. Long-time delay
   f. Instantaneous pickup with short-time for main, tie and feeders.

3. GROUND FAULT TRIPPING:
   a. Adjustable ground fault pickup
   b. Adjustable ground fault delay

2.05 PANEL INSTRUMENT AND ACCESSORIES

Panel instrument and accessories shall be as specified in accordance with Section 16440 or provided as the manufactures standard offerings for panel instrument and accessories that are rated for metering services and that include potential and current transformers with the standard associated protective and testing devices.

2.06 PROTECTIVE RELAYING

Protective relaying shall be as specified. The tripping devices and instrument transformer ratios specified are preliminary and are subject to confirmation with the protective devices coordination study in Section 16431.

Provide all protective relay functions listed and as required. Provide the following at a minimum for the main and generator breakers:

1. Time overcurrent 50/51
2. Phase failure/Phase unbalance 47
3. Under voltage 27
4. Overvoltage 59
5. Underfrequency 81U
6. Overfrequency 81O
7. Ground fault 64
8. Lockout 86
9. AC directional overcurrent 67
10. Directional power 32

2.07 EQUIPMENT IDENTIFICATION

A. NAMEPLATES:

In addition to the manufacturer's identification, switchgear shall be provided with phenolic nameplates showing switchgear, main breaker, and feeder breaker designations as specified. Nameplates shall comply with Section 16000.

B. CONDUCTOR MARKERS:

Conductor markers shall comply with Section 16000.

2.08 WIRING

A. CONDUCTORS:

Internal switchgear wiring shall consist of single conductor SIS 90 degree C copper wire and UL listed for panel wiring. The wire shall be sized to suit load requirements with the minimum size of No. 14 AWG.

B. TERMINAL BLOCKS:

Terminal blocks shall comply with Section 16000.

C. CABLE CONNECTORS:

Cable connectors for outgoing power cables shall be suitable for use with aluminum or copper conductors. They shall be UL listed as a compression connector and shall be sized for the specified conductor.

Conical washers shall be used for each connection.

2.09 PRODUCT DATA

The following information shall be provided in accordance with Section 01300:

1. Arrangement and layout drawings of the switchgear enclosures depicting equipment and bus arrangement and dimensions including areas of permissible cable entries. A list of material and components shall accompany the layout drawings.

2. Catalog data and instruction manuals on all electrical devices and components mounted on or within the switchgear.

3. Results of factory tests and field breaker setting tests as specified in paragraphs 16310-1.02.B and 16310-3.02.

4. Operation and maintenance information as specified in Section 01730.

5. Manufacturer's product information.

6. Manufacturer's certification and calculations that the equipment meets the seismic requirements of paragraph 16000-1.05 D.

2.10 AUTOMATIC THROWOVER CONTROL

See Specification Section 16364 for Generator Control and Synchronizing Switchgear. This SWGR shall be designed to monitor and control one normal utility source and two standby emergency generator sources to maintain continuous power source at this facility using a PLC based control system.

2.11 ACCESSORIES

1. Breaker lifting hoist and travel rail on top of switchgear.
2. Auxiliary a/b contacts on main, tie and feeder breakers.
3. Handheld test kit for functional testing of trip circuitry of each breaker.
4. Provide SPD as specified in 16445.
5. Slow breaker closing handle for contact adjustments.
6. Provide safety signs per the NEC and at a minimum provide one sign on the front and one in the back of the switchgear. Provide red with white lettering “DANGER/HIGH VOLTAGE/KEEP OUT”

PART 3--EXECUTION

3.01 PROTECTIVE DEVICE SETTINGS

The protective devices shall be adjusted to the settings specified in the protective device coordination study in Section 16431 prior to energizing the switchgear.

3.02 FIELD TESTS

Each switchgear breaker shall be tested in accordance with Section 16030 – Testing.

3.03 INSTALLATION

1. Install equipment in accordance with manufacturer’s instructions and recommendations.
2. Secure equipment to mounting pads with anchor bolts.
3. Install equipment plumb and in longitudinal alignment with pad or wall.
4. Coordinate terminal connections with installation of secondary feeders.
5. Adjust overcurrent protective devices to settings per the coordination study.

3.04 MANUFACTURER’S SERVICES

Furnish manufacturer’s representative for the following services at Job Site or classroom as designated by Owner, for minimum person-days listed below, travel time excluded:

1. 1 person-day for installation assistance and inspection.
2. 1 person-day for functional and performance testing.
3. 1 person-day for prestartup classroom or Job Site training.
4. 1 person-day for plant startup.
5. 1 person-day for post-startup training.

Furnish startup services and training of Owner's personnel at such times as requested by Owner.

Provide Manufacturer's Certificate of Proper Installation.

END OF SECTION

SECTION 16311

LOW-VOLTAGE SWITCHBOARDS

PART 1--GENERAL

1.01 DESCRIPTION

This section specifies indoor, front accessible, deadfront power distribution switchboards rated 600 volts, 3 phase, 60 Hertz.

Provide metal oxide varistor (MOV) surge protective device (SPD) integral within each panelboard that indicates the status and condition of the SPD, tested per NEMA LS-1, rated IEEE C3 Combined Wave of 20kV and 10kA with 200kAIC internal fusing and listed / labeled per UL 1449.

1.02 QUALITY ASSURANCE

A. REFERENCES:

This section contains references to the following documents. They are a part of this section as specified and modified. Where a referenced document contains references to other standards, those documents are included as references under this section as if referenced directly. In the event of conflict between the requirements of this section and those of the listed documents, the requirements of this section shall prevail.

Unless otherwise specified, references to documents shall mean the documents in effect at the time of Advertisement for Bids or Invitation to Bid (or on the effective date of the Agreement if there were no Bids). If referenced documents have been discontinued by the issuing organization, references to those documents shall mean the replacement documents issued or otherwise identified by that organization or, if there are no replacement documents, the last version of the document before it was discontinued. Where document dates are given in the following listing, references to those documents shall mean the specific document version associated with that date, regardless of whether the document has been superseded by a version with a later date, discontinued or replaced.

Reference	Title
ANSI C57.13	Requirements for Instrument Transformers
IEEE	Institute of Electrical and Electronic Engineers
NEMA PB 2	National Electrical Manufacturer Association Deadfront Distribution Switchboards
UL 891	Underwriters Laboratory - Deadfront Switchboards

B. LISTED PRODUCTS:

Electrical equipment and materials shall be listed for the purpose per Section 16000.

C. FACTORY TESTS:

Switchboards shall be tested for operation at the specified voltage and current ratings after assembly. The main circuits shall be given a dielectric test of 2200 volts for 1 minute between live parts and ground, and between opposite polarities. The wiring and control circuits shall be given a dielectric test of 1500 volts for 1 minute between live parts and ground.

Instrument transformers shall have ratio and phase angle tests made in conformance with ANSI C57.13.

1.03 SUBMITTALS

The following information shall be submitted in accordance with Section 01300:

1. A copy of this specification section, with addendum updates included, and all referenced and applicable sections, with addendum updates included, with each paragraph check-marked to indicate specification compliance or marked to indicate requested deviations from specification requirements. A check mark shall denote full compliance with a paragraph as a whole. If deviations from the specifications are indicated, and therefore requested by the Contractor, each deviation shall be underlined and denoted by a number in the margin to the right of the identified paragraph, referenced to a detailed written explanation of the reasons for requesting the deviation.

   The Engineer shall be the final authority for determining acceptability of requested deviations. The remaining portions of the paragraph not underlined will signify compliance on the part of the Contractor with the specifications. *Failure to include a copy of the marked-up specification sections, along with justification(s) for any requested deviations to the specification requirements, with the submittal shall be sufficient cause for rejection of the entire submittal with no further consideration.*

2. A copy of the contract document single line diagrams, building plan, and elevation drawings relating to the submitted equipment, with addendum updates that apply to the equipment in this section, marked to show specific changes necessary for the equipment proposed in the submittal. If no changes are required, the drawing or drawings shall be marked *"no changes required"*. *Failure to include copies of the relevant drawings with the submittal shall be cause for rejection of the entire submittal with no further review.*

3. Catalog data on all electrical devices and components mounted on or within the switchboard.

4. Manufacturer's data indicating interrupting, withstand, and continuous current ratings of all relevant equipment and components.

5. Arrangement and layout drawings of the switchboard enclosures indicating equipment and bus arrangement and dimensions including areas of permissible cable entries. A list of material and components shall accompany the layout drawings. Include weight and shipping split data.

6. Manufacturer's certification that equipment meets the seismic requirements.

1.04 PROJECT/SITE CONDITIONS

Ambient and seismic conditions shall be as specified in paragraph 16000-1.05.

PART 2--PRODUCTS

2.01 MANUFACTURERS

Switchboards shall be provided in accordance with UL 891, NEMA PB 2, and as specified. Provide Arc Flash mitigation products that are offered in the manufacturer's literature.

The Owner and Engineer believe the following candidate manufacturers are capable of producing equipment and/or products that will satisfy the requirements of this Section. This statement, however, shall not be construed as an endorsement of a particular manufacturer's products, nor shall it be construed that named manufacturers' standard equipment or products will comply with the requirements of this Section. Candidate manufacturers include:

1. Eaton Cutler-Hammer "Pow-R-Line" with Magnum DS breakers
2. Schneider – Square D equal
3. General Electric Co. equal
4. or equal

2.02 CONSTRUCTION

A. ARRANGEMENT:

Switchboards shall be new, deadfront, indoor type, metal enclosed, self-supporting, and suitable for 600 volts, 3 phase, 3 wire or 4 wire service as indicated on the drawings. Suitable for mounting against a wall without back access.

Switchboards shall be provided with vertical sections bolted together to form rigid units with switching and protective devices of the number, rating, and type specified.

Interconnections, instrumentation, and control wiring shall be completed in the factory so that site work is limited to bolting shipping sections and connecting cable assemblies.

B. STRUCTURE:

Structural members shall be universal frame die formed type, bolted and braced using self-tapping bolts. Cover plates shall be steel having formed edges. Front plates shall be sectionalized and removable. Lifting eyes shall be provided and switchboards shall be capable of being rolled or moved into position and bolted directly to the floor without the use of floor sills. Switchboard enclosure rating shall be NEMA-1 unless otherwise noted.

C. FINISH:

The finish shall comply with Section 16000.

2.03 COMPONENTS

A. BUS BARS:

Buses shall be tin-plated copper of sufficient size to limit the temperature rise to 65 degrees C, based on UL 891.

Unless otherwise specified, buses shall be braced to withstand short circuit stresses up to 65,000 RMS amperes. Main horizontal bus shall be mounted on glass polyester insulators and shall have the continuous capacity specified.

A ground bus having a momentary rating at least equal to the highest momentary rating of any circuit breaker in the assembly shall extend the full length of the switchboard. Ends of the ground bus shall be provided with clamp-type terminals for No. 4/0 AWG bare copper grounding conductors.

B. CIRCUIT BREAKERS:

1. GENERAL: Circuit breakers shall be stored energy type mechanism to provide quick-make, quick-break, trip-free operation:

a. Insulated case UL listed 100 percent continuous current capacity.
b. Molded case UL listed 80 percent continuous current capacity.
c. Ground fault protection shall be provided as specified or indicated.

Circuit breakers shall provide manual switching operation by means of a low-torque handle or pushbutton on the front of the unit. Automatic operation during overload and short circuit conditions shall be provided by solid state or thermal magnetic tripping devices located in the circuit breaker frame as specified on the drawings.

Circuit breakers shall be front accessible, stationary, individually mounted, and shall have short circuit capabilities equal to or greater than the system in which they are installed.

Circuit breakers shall have a minimum interrupting current of 65,000 amperes symmetrical RMS at 480 Vac.

2. STATIC TRIPPING DEVICES: Solid state static tripping devices shall consist of current sensors, logic assembly, magnetic latch release, and required interconnecting wiring. Tripping devices shall be automatic and self-contained within the breaker frame and shall not require any external relaying or power supplies.

Tripping functions shall be field adjustable and contain the following tripping characteristics:

a. Overload tripping:
   1) Adjustable ampere setting
   2) Adjustable long-time delay

b. Short circuit tripping:
   1) Adjustable short-time pickup
   2) Adjustable short-time delay
   3) Adjustable instantaneous pickup

c. Ground fault tripping:
   1) Adjustable ground fault pickup
   2) Adjustable ground fault delay

C. PANEL INSTRUMENTS AND ACCESSORIES:

Panel instruments and accessories shall be as specified on the drawings or schedules and provided in accordance with Section 16440 where the section is included in the Contract Documents or provide the manufacturer’s standard metering with associated potential and current transformers with accessories.

D. NAMEPLATES:

In addition to the manufacturer's identification, switchboards shall be provided with phenolic nameplates indicating switchboard, main breaker, and feeder breaker designations as specified. Nameplates shall comply with Section 16000 and the NEC for uniquely labeling the power loads and using equipment Tag Numbers and Tag Descriptions where shown on the drawings or schedules.

E. CONDUCTOR MARKERS:

Conductor markers shall comply with Section 16000.

F. WIRING:

Internal switchboard wiring shall consist of single conductor SIS 90 degree C copper wire and UL listed for panel wiring. The wire shall be sized to suit load requirements. Minimum size shall be No. 14 AWG.

2.04 PRODUCT DATA

The following information shall be provided in accordance with Section 01300:

1. Results of breaker setting tests as specified in paragraph 16311-3.02.

2. Operation and maintenance information as specified in Section 16000, including final reviewed submittal.

PART 3--EXECUTION

3.01 PROTECTIVE DEVICE SETTINGS

The protective relays and static tripping devices shall be adjusted to the settings specified in the protective device coordination study in Section 16431 prior to energizing the switchboard.

The instrument transformer ratios and protective devices shown on the drawings are preliminary and are subject to confirmation with the coordination study in Section 16431.

3.02 FIELD TEST

Each switchboard breaker shall be tested in accordance with Section 16030 – Testing.

END OF SECTION

SECTION 16364

GENERATOR CONTROL AND SYNCHRONIZING SWITCHGEAR

PART 1--GENERAL

1.01 DESCRIPTION

This Section specifies generator control and synchronizing switchgear:

1. Section includes:

   a. Switchgear shipped in sections with receiving, unloading, hoisting, testing, installing and connection of factory assemblies that provide electrical switchgear for the standby engine-generator sets control and synchronizing.

   b. Plant Control System interface to the generator monitoring equipment.

2 Items assembled, installed, tested, and connected.

3. Item furnished:

   a. Low voltage power circuit breakers.

   b. Metal enclosed low voltage switchgear.

   c. Electrical metering and monitoring system.

   d. Fuses, relays, control power transformers, current and potential transformers, control wiring, hardware touch-up paint etc.

4. Items furnished per other sections:

   a. The 277/480 volt distribution wiring, raceway and terminations.
   b. External grounding of substation and transformer.
   c. NETA testing of circuit breakers.

5. The switchgear manufacturer furnishing equipment shall be responsible for the complete design, fabrication, assembly, testing, and final testing of equipment, devices, controls, wiring, and accessories described in this specification.

6. Low voltage switchgear assemblies shall be 480Vac, 3-phase, 4-wire, 60 Hertz, free standing cubicles of draw-out, electronic trip, electrically operated circuit breakers, with associated controls, meters, and accessories.

1.02 REFERENCES

This Section contains references to the following documents. They are a part of this Section as specified and modified. Where a referenced document contains references to other standards, those documents are included as references under this Section as if referenced directly. In the event of conflict between the requirements of this Section and those of the listed documents, the requirements of this Section shall prevail.

Unless otherwise specified, references to documents shall mean the documents in effect at the time of Advertisement for Bids or Invitation to Bid (or on the effective date of the Agreement if there were no Bids). If referenced documents have been discontinued by the issuing organization, references to those documents shall mean the replacement documents issued or otherwise identified by that organization or, if there are no replacement documents, the last version of the document before it was discontinued. Where document dates are given in the following listing, references to those documents shall mean the specific document version associated with that date, regardless of whether the document has been superseded by a version with a later date, discontinued or replaced.

Reference	Title
ANSI	American National Standards Institute
NEMA	National Electrical Manufacturers Association
NEMA 250	Enclosures for Electrical Equipment (1000 volts maximum)
NFPA 70	National Electrical Code (NEC)
UL	Underwriters Laboratories, Inc.

1.03 DESCRIPTION OF SYSTEM

Freestanding assembly containing circuit breakers and control devices for operation, control, and synchronization of two engine generator sets with the power utility system. The system shall be designed so the normal utility will carry the entire plant load and the two standby generators shall provide emergency power for normal (duty) loads at the facility. Contractor and supplier(s) shall reference contract drawings for system configuration.

1.04 SYSTEM OPERATION

A. MODES OF OPERATION:

1. Normal Operation:

a. One (normal) power utility source available.

b. Generator main source breakers in the SWGR are open and the SWGR tie breaker is closed.

c. Main service circuit breaker closed.

d. Generator(s) in the automatic mode with the local generator breakers closed.

e. SWGR control and monitoring system monitors normal source; standing by to respond to normal source failure or call to start generators from SCADA.

f. OIT on SWGR indicates all breaker positions and system is in automatic.

2. Utility Outage (Power Outage):

a. Loss of a service transformer, feeder, main service breaker, etc. Monitored by the Plant Control System via the Main Switchgear.

b. SWGR Main Disconnect Breaker (MD1) and tie breaker open, separating normal source, Bus A and Bus B.

c. One generator is started. When it is up to voltage and frequency the feeder breaker (GD01) at the SWGR is closed to the Bus B. After an adjustable period of time (less than 10 sec.) the tie breaker shall close and energize Bus A.

d. Load will be picked up by the first generator by priority by SWGR controlling MCC feeder breakers and PDP on Bus B. As this generator nears 70-80% load, the second generator will be called to start.

e. The second generator will come up to voltage and frequency and when it is synchronized it will be paralleled to the bus by closing its feeder breaker (GD02) at the SWGR. Loads on Bus A will then be picked up by the standby systems by the SWGR controlling MCC feeder breakers and PDP on Bus A. Breakers will be closed by priority.

f. The following is the general step sequence that was used for design purposes. Actual sequencing will be finalized during construction. Coordination will be required with the Plant SCADA system integrator to finalize start/delay times and equipment sequence of startup. The following is the step sequence for the feeder breakers:

1) FB01A
2) FB01B (max. 10 sec)
3) FB04A
4) FB04B
5) FB03A
6) FB02A
7) FB04B
8) FB03B (approximately 1 minute)

g. The system is now in Emergency Mode and full standby power is available.

3. Automatic Operation (Closed Transition):

a. Circuit breaker closed transition time for soft loading and unloading shall be a maximum of 30 seconds and typically in a ranged from 10 to 20 seconds.

b. Provide protective relaying and functions for closed transition of generators.

c. Provide electrically operated circuit breakers.

d. When the normal utility source returns, the SWGR will synchronize the generators with the normal source and close MD1. During this period the generators will unload and return 100% of the load back to the utility and shutdown when this cycle is complete; returning to standby (automatic, shut down) mode, after a cool down period.

4. Emergency shutdown:

a. Shunt trip switch provided and remotely mounted for emergency personnel to open the main circuit breaker. Switch shall be KNOX 4500 Series or approval alternate.

b. Main Switchgear control shall shutdown normal and emergency power systems.

5. Control System Failure:

a. The automatic control system shall be designed to provide manual control during a PLC and/or OIT failure.

b. If the OIT fails, the system will continue to operate normally. During a utility failure the generators will be called to start, synchronize and parallel to the bus. The sequence of operations will not be affected by this failure.

c. Hard wired switches shall be provided inside the SWGR that allow redundant control for automatic modes of operations in case of OIT failure. These switches allow the operator to put all control switches normally shown on the OIT back in the automatic mode.

d. A single generator PLC failure shall not cause a complete system failure, only a failure of that generator to start in automatic mode. This generator shall still be operational and the operator will have the ability to start the generator manually, close the breaker

manually and adjust the voltage and speed manually to allow the generators to share load.

e. Hardwired interlocks shall be provided for safety to prevent breakers from closing.

6. Utility Restoration and Exit from Emergency Mode

a. SWGR senses the utility source is within acceptable operational tolerances for a time duration set at the OIT.

b. SWGR will execute a soft unloading shutdown as previously described.

7. Test Mode

a. SWGR receives a signal to test from SCADA or the OIT.

b. SWGR breaker MD1 and tie breaker are closed (normal) position.

c. One Standby Generator is called to start automatically. This generator accelerates to rated frequency and voltage. The SWGR monitoring the generator's status closes the feeder breaker when the generator is synchronized with the normal utility.

d. The second standby generator is called to start. This generator accelerates to rated frequency and voltage. The SWGR monitoring the generator's status closes the feeder breaker when the generator is synchronized to the bus.

e. SWGR breaker MD1 opens before 30 seconds of closed transition time elapses.

f. The Facility runs on standby power for an adjustable (test) period of time and then begins the soft loading, shutdown cycle, which synchronizes and closes MD1 and shutdown the generators as previously described.

g. If the normal source fails during the test, the test will be cancelled and the system will operate as described in Utility Outage.

8. Utility Bus A and Standby Bus B

a. Using the OIT the operator will have the ability to energize Bus A with the normal source and Bus B with standby power sources.

b. The SWGR will manage this transition to ensure control of generator voltage, frequency and synchronization with the system.

c. The initiation of this operation will occur at the OIT. The operator will select this mode of operation and the SWGR will call the generators to start and synchronize with the bus. Once both normal and standby systems are operating together the tie breaker will open and isolate Bus A and Bus B. Normal source will power Bus A and standby power will power Bus B.

d. Operator will select normal (automatic) operation at the OIT to return the SWGR to it's normal state and shutdown standby power systems.

9. OIT Manual Mode

a. Operator can select manual mode at the OIT.

b. The manual mode allows the operator to start each generator and connect to the bus individually. If more than one generator is started, each synchronizes to the bus before breaker closing, as is typical operation.

c. The normal source MD1 breaker will open prior to the 30 second maximum closed transition time out.

1.05 SUBMITTALS

A. SPECIAL SUBMITTAL REQUIREMENTS:

1. Combine submittals of this Section with Sections listed below to ensure the design of the system/assembly is understood and can be reviewed together:

   a. Section 16310 Low Voltage Switchgear.
   b. Section 16231 Standby Engine Generators.

2. Comply with Section 01300.

3. Provide a detailed written Sequence of Operation, including proposed OIT screens for review.

B. PRODUCT DATA:

Manufacturer's specifications and technical data including performance, construction and fabrication. Submit Product Data on the following items:

1. Bus ratings: volt, phase, bus bracing and ampacity.
2. Electrical one-line, schematic, and wiring drawings.

C. SHOP DRAWINGS:

1. Indicate dimensions, description of materials and finishes, general construction, specific modifications, component connections, anchorage methods, hardware, and installation procedures, including specific requirements indicated.

2. Submit shop drawings on the following items:

a. Supplier shall provide drawings showing the physical layout and dimensions of the switchgear. Contractor shall provide placement drawings showing unit location in the allotted space dimensions verified in the field and with other trades.

b. Elevations, indicating actual arrangement of devices, equipment and meters, complete schematic diagram of wiring for indicator, control and alarm systems identifying items by part number and function.

c. Wiring diagrams showing connections between control switchgear and engine generators.

D. QUALITY CONTROL:

1. Source Quality Control submittals as specified in Part 2 of the Section.
2. Field Quality Control submittals as specified in Part 3 of this Section.

1.06 QUALITY ASSURANCE

A. INSTALLER'S QUALIFICATIONS:

Experienced in installation of systems similar in complexity to those required for this Project.

B. PRODUCT AND MATERIAL QUALIFICATIONS:

1. Factory test after fabrication.

2. Switchgear manufacturer shall conduct operational test using engine generators, simulating complete function of entire system before delivery.

PART 2--PRODUCTS

2.01 MANUFACTURERS

The following are candidate manufacturers or references to relevant reference specifications where manufacturers are named that are known to be capable of producing equipment and/or products that will satisfy the requirements of this Section. This statement, however, shall not be construed as an endorsement of a particular manufacturer’s products, nor

shall it be construed that named manufacturers' standard equipment or products will comply with the requirements of this Section. Candidate manufacturers include:

1. Manufacturer's for Low-Voltage Switchgear are specified in Specification Section 16310. Low-Voltage Switchgear shall be provided by the generator manufacturer to provide an integrated emergency power system.

2. Protective Relays shall be provided on the Main Circuit Breaker for Utility Required Protection during closed transition transferring. Manufacturer shall provide generator protection with protective relays or through the control systems:
   a. Schweitzer Engineering Laboratories
   b. ABB
   c. Basler
   d. Square D
   e. GE Multilin

3. Digital Metering shall be in accordance with 16440.

4. Programmable Logic Controller (PLC): Allen Bradley or Modicon with TCPIP protocol and provisions for communications via the Ethernet IP network.

2.02 SWITCHGEAR

Rigid, free-standing, metal-enclosed low voltage switchgear with complete isolation provided for low voltage controls, paralleling circuit breakers, potential transformers, control power transformers, and tin-plated copper bus with each enclosed and isolated from others with a barrier between sections.

Provide ratings indicated and sections shall meet or exceed the requirements of UL 1558 and applicable standards of NEMA, IEEE and ANSI. Open or panel type construction not providing total isolation shall not be accepted.

Provide sufficient space in a cubicle for the engine generator control for the two generators and master control as needed for the specified system. Generator controls systems, including synchronizing controls, shall be located in the switchgear.

Provide risers within generator cubicles for connection to generators. Stagger cable risers as required. Coordinate risers with manufacture for spacing of risers match.

Provide low voltage distribution sections of synchronizing switchgear by synchronizing switchgear supplier.

1. Distribution sections utilize same drawout solid state trip insulated case circuit breakers as provided by low voltage switchgear supplier.

2. Breakers have ground fault feature.

3. Provide ground fault sensing relay on breaker with pilot light for local annunciation including set of normally-open contacts for remote annunciating fault.

Provide top rail entire length of switchgear for removal and replacement of breakers.

See Section 16310 for additional specifications for low voltage switchgear.

2.03 SELECTOR SWITCHES

Automatic-manual switch, 2 or 3 position, to select between functions described under system operation. Selector switches may be located on the Operator Interface Terminal in the Master Control Section of the switchgear, provided a means to control the generator manually is provided, if the OIT fails.

Engine test switch for generator, 4 position, "stop-off-auto-run".

1. Stop Position: Generator is locked out and if generator is running it shall immediately shut down and its circuit breaker trips

2. Off Position: Generator's circuit breaker trips and generator goes through normal shut down with time delay to allow engine to cool.

3. Auto Position: Generator in standby and start whenever power failure signal is received from automatic transfer switch. When normal power returns generator circuit breaker trips and generator goes through normal shut down with time delay to allow engine to cool.

4. Run Position: Generator starts and continues to run until selector switch is returned to "off" or "stop" position.

Test switch, 3 position, key operated, "test with load - test without load - normal".

1. Test With Load Position: When placed in test with load position generators start, automatically synchronize and parallel on main bus and load transfers to emergency as capacity permits in same priority as if actual power failure had occurred.

2. Test Without Load Position: When placed in test position generator starts, automatically synchronize and parallel on main bus at no load. No transfer is initiated in the without load mode of operation.

3. Normal Position: Return of test switch to normal trips generator breakers and restores equipment to normal operation. Generator shall complete a cool down cycle.

2.04 AUTOMATIC ACTIVE SYNCHRONIZER

A. GENERAL

One for each generator, integral to generator control panel or panel mounted with dust tight enclosure with control adjustments and input/output terminals legibly marked.

Operate synchronizer over input voltage range of 80 percent to 125 percent of nominal indefinitely; and over ambient temperature range of 0 degrees C. to 40 degrees. Synchronizer capable of meeting dielectric and surge withstand capabilities as set forth in IEEE STD. 472-1974/ANSI C 37, 90A-1947 specifications.

Synchronizer becomes operative when generator voltage reaches 75 percent of normal and assumes control of generator voltage, frequency and phase to match main bus and to close generator breaker when preset limit has been reached. Synchronizer relinquishes control of generator governor 1 second after breaker closure.

Provide fail to synchronize time delay relay to sound warning horn in event generators are unable to be synchronized within an adjustable period of time, approximately 0-3 minutes (set at 30 seconds).

B. SYNCHRONIZER OUTPUTS:

1. Voltage raise contact to increase generator voltage to point within preset and adjustable percentage of voltage.

2. Voltage lower contact to decrease generator voltage to point within preset and adjustable percentage of voltage.

3. DC signal suitable for driving governor/amplifier system.

4. Synchronize contact to close generator circuit breaker when generator voltage has same amplitude, frequency, and phase as bus.

C. SYNCHRONIZER FRONT PANEL CONTROLS AND/OR OIT CONTROLS:

1. Phase window control to adjust phase angle acceptance band, approximately plus or minus 4 degrees to plus or minus 30 degrees for 60 Hertz.

2. Voltage window control to adjust voltage and amplitude acceptance band, approximately 0 percent to plus or minus 25 percent.

3. Sync time control to adjust synchronizer damping to particular engine/generator/governor combination being used.

4. Gain control to optimize synchronizing speed to particular engine/generator/governor combination being used.

5. Sync delay control to allow the phase angle to stabilize within phase angle acceptance band before sync relay closure.

D. SYNCHRONIZER MODE SWITCH, 4 POSITION, "AUTO-SYNC CHECK-TEST-OFF":

1. Auto: Normal automatic phase-lock operation with control over generator voltage, frequency, and phase, and providing sync relay contact closure.

2. Sync-Check: No control over generator voltage, frequency, or phase, but provides sync relay contact closure when parameters are within preset limits.

3. Test: Normal automatic phase-lock operation with control over generator voltage, frequency, and phase, but with no sync relay contact closure when sync conditions are met.

4. Off: No control over generator voltage, frequency, or phase, and no relay contact closures. Generator is controlled only by governor and voltage regulator settings.

2.05 REVERSE POWER PROTECTIVE RELAY OR CONTROLS

Responds to power, in-phase component of current to detect motorizing condition of respective engine generator set. Trip setting is adjustable from 0 to 15 percent of forward power rating of respective engine generator set, factory set of 10 percent.

One for each generator, integral to generator control or self-contained single phase, solid state type, inverse time characteristics and dust tight cover, furnished to detect excessive reverse power flow caused by motorizing of failing generator. Upon detection of true reverse power flow, monitor signals to immediately trip generator's breaker and to actuate load shedding.

Monitor automatically resets upon generator power disconnect. Monitors include the following:

1. Response independent of frequency over range of 40 to 70 Hertz and shall be across power factor range of 0.2 to unity, leading or lagging, with repeatability within plus or minus 3 percent.

2. Relay includes adjustable time delay 0.1 to 6.0 seconds with characteristics compatible with specified engine driven generator. Factory setting is 2.0 seconds.

3. Provide test switch to enable relay circuit to sense reverse power.

4. Detection of reverse power flow as specified above causes immediate removal of respective engine generator from bus and immediate shutdown.

2.06 ENGINE GENERATOR CONTROL CUBICLES

Provide the following basic components or functionality and additional equipment necessary to provide for a complete and dependable system. Instruments to be 4 1/2 inch switchboard type, 1 percent accuracy, similar and equal to General Electric AB-40. Edgewise 1 1/2 percent accuracy instruments are not acceptable. As an alternate, metering, status, monitoring and control switches described below may be provided on the OIT in the Master Control Section of the switchgear. Metering shall be provided by power meter, integral to the switchgear.

Provide heavy-duty rotary type instrument control switches, rated 600 Vac, similar and equal to Electro Switch Company Type 24.

1 AC Voltmeter, 600 volt scale.

1 Voltmeter selector switch reading phase to phase and phase to neutral.

1 AC Ammeter, 3000 ampere scale, 5 ampere movement.

1 Ammeter selector switch, reading off-one-two-three.

1 AC Wattmeter, 2000 KW scale.

1 Synchro-scope switch (key interlocked).

1 Frequency meter switch with bus-off-generator nameplates (key interlocked).

1 Circuit breaker control switch with red and green position lights.

1 Reverse power relay (anti-motoring type).

1 Engine selector switch with stop-off-auto-run nameplate.

1 Circuit breaker electrically operated drawout type with lockout relay to prevent re-closing.

1 Set of fail lights as listed under automatic starting control and failure system.

1 Heavy-duty automatic engine starting system arranged to control operation of engine-driven generator through engine selector switch mounted on front door of enclosure.

1 Set of potential transformers as required, Westinghouse Type PXA-10 or equal.

1 Set of current transformers as required, Westinghouse Type PXA-10 or equal.

1 Set of 3 phase main bus with full neutral and separate ground bus.

1 Set of control wiring, fuses, fuse blocks, terminals, nameplates, etc. Wiring to be numbered at both ends.

1 Set of solderless lugs on phase and neutral bus for generator connections.

1 Running time meter, 3 1/2 inch (99.9 MM) flange, general electric 231 or equal.

1 Automatic active synchronizer.

Automatic starting control and failure system for cubicle to control starting, stopping, and monitoring of engine generator. Permit engine cranking system at least 4 cranking attempts of 10 second duration with rest periods of 10 seconds. Over crank lockout to occur after 4 unsuccessful cranking attempts.

Provide failure system for shutdown failure with red warning lights to indicate nature of failure.

Provide following annunciator with additional contacts for remote indication of each.

1	Approach low lube oil pressure	Alarm only
1	Low water temperature	Alarm only
1	Approach high water temperature	Alarm only
1	Battery failure	Alarm only
1	Generator locked out	Alarm only
1	Spare	Alarm only
1	Overspeed	Immediate shutdown
1	Overcrank	Immediate shutdown
1	Reverse power	Immediate shutdown
1	Overcurrent (circuit breaker trip and lockout)	Immediate shutdown
1	Failure to synchronize	Alarm only
1	Low lube oil pressure	Immediate shutdown
1	High water temperature	Immediate shutdown
1	Lamp test switch	

1 Provide audible alarm indication for failure, and alarm modes, adjustable 70-100 decibels, and include silencing circuit which after activation shall permit audible annunciation of subsequent failures

Control device outputs, unless noted otherwise, isolated through plug in relays with contacts rated for intended service. Provide relays used in control circuit logic with gold flashed contacts for low voltage, low current duty. Enclose relays and plug in time delays in polycarbonate covers with control voltages clearly marked.

Generator voltage protective relay to respond to true R.M.S. value of generator voltage. Provide relay with field adjustable pick-up range of 75 percent to 100 percent of nominal and field adjustable dropout of 80 percent to 95 percent of pickup. Provide dropout with 0 differential for time delay reset about dropout setting. Factory settings 90 percent pick-up, 85 percent dropout.

Generator frequency protective relay utilizing full cycle sensing responds to fundamental frequency of system ignoring wave shape distortion resulting from solid state controlled loads. Relay to be field adjustable 45 to 60 Hertz pickup with adjustable differential of 0.1 to 10 Hertz. Provide under frequency trip with 0 differential for time delay reset about trip setting. Factory settings 58.8 Hertz pickup, 52.8 Hertz dropout.

Provide voltage/frequency dropout time delay 0.1 to 6 seconds field adjustable to override loading transients. Repetitive accuracy within plus or minus 10 percent, factory setting 2 seconds.

Provide alarm point and shutdown functions as listed above, with 1 set normally open auxiliary contacts or make all alarm points and shutdown functions available via communications to the Plant's SCADA monitoring and controls systems.

2.07 MASTER CONTROL CUBICLE

One master control cubicle with the following basic components and additional equipment necessary to provide for complete and dependable system. Instruments to be 4 1/2 inch switchboard type, 1 percent accuracy, similar and equal to General Electric AB-40. Edgewise 1 1/2 inch accuracy instruments are not acceptable. As an alternate, metering, status, monitoring and control switches described below may be provided on the OIT.

Provide heavy-duty rotary type instrument control switches, similar and equal to Electro Switch Company type:

1 Manual paralleling permissive relay to prevent manual paralleling until both systems are within acceptable limits.

1 Master control and synchronizing relay panel to control operation and synchronization of engine generators as described herein.

1 Derive DC control power for system logic from engine starting batteries. Power control logic from battery or combination of batteries assuring continuity of power until last battery is no longer available. Transition of

control logic power from battery combination to other battery combination accomplished without disruption in power flow. Control power system to prevent feedback to failing battery.

1 Set of status lights showing number of "engines locked out", "engines running", "engines closed to bus.

1 Load shed and read control panel with manual load shed bypass switch and load-shed bypass indicating light.

1 Set bus voltage and frequency sensors with fail light and reset pushbutton.

1 System test switch with "system in test" indicating light.

1 Fail to synchronize time delay for synchronizer.

1 Provide master audible alarm horn adjustable from 78 to 102 decibels. Include alarm silence pushbutton and circuitry to allow audible annunciation of subsequent malfunctions.

1 Master auto-man switch with "non-automatic" indicating light.

1 Set of fail lights as listed below.

1 Set of potential transformers as required, Westinghouse PXA-10 or equal.

1 Set of 3 phase main bus, with full neutral and separate ground bus. Include solderless load lugs to accept specified load phase and neutral power conductors.

1 Set of control wiring, fuses, fuse blocks, terminals, nameplates, etc., as required. Provide wiring numbered at both ends.

1 Set of solderless lugs on phase and neutral bus for customers load connection.

1 Bus AC Voltmeter, 600 volt scale reading phase to phase.

1 Frequency meter for station bus and each generator unit, dial type 55 65 Hertz scale.

1 Remote shunt trip shutdown switch.

Provide the following fail circuitry for master control cubicle:

1	Low fuel - main tank	Alarm only
1	Voltage/frequency failure	Alarm only
1	Load shed activated	Alarm and load shedding

Each point, as listed above, provided with 1 set of N.O. Auxiliary contacts or make all alarm points and shutdown functions available via communications to the Plant's SCADA monitoring and controls systems.

A. GENERAL REQUIREMENTS:

1. Solid state devices shall exceed transient over-voltage withstand test per NEMA ICSI-109 and surge withstand capability tests (SWC) per IEEE Standard 472-1974 (ANSI C37.90A-1974). In addition, where UL standards exist for components, devices and/or assemblies, such standards apply.

2. Mount solid state controls, monitors, protective relays and devices on glass epoxy printed circuit boards and coated with polyurethane for protection against harsh environments and accidental contact. Provide relays controlled by solid state circuitry with positive binary action on or off, and free from creeping and/or contact chatter.

3. Provide electromagnetic control relays suitable and adequately rated for intended service in control system. Provide relays used in low-voltage, low-current DC control circuits with gold flashed contacts to insure positive contact make. Relays used for other than logic and dry contact switching to have contact ratings suitable for make and carry of their duty current at voltage of operation. Provide plug-in type relays for control circuit duty with retaining clips and transparent plastic or glass covers. Clearly mark relays for control voltage.

4. Repetitive accuracies for solid state protective relays, devices, controls and monitors shall not exceed stated values for AC powered devices over voltage range of 70-110 percent of nominal, and for DC powered devices over voltage range of 20-40 volt DC.

Voltage:	+/- 2% of set point over a frequency range of 40-70 Hertz
Current:	+/- 3% of set point over a frequency range of 40-70 Hertz
Frequency:	+/- 0.2 Hertz
Power:	+/- 3% of set point over a frequency range of 40-70 Hertz
Voltage Difference:	1.0 V over a frequency range of 40-70 Hertz
Frequency Difference:	+/- 0.05 Hertz
Relative Phase Angle:	+/- 1.0 degree at 50 or 60 hertz

5. Repetitive accuracies shall be maintained across an operating temperature range of 10 degrees C to +65 degrees C, 100% humidity, at altitudes up to 2,000 meters.

B. LOAD SHEDDING AND ADDING CONTROL CIRCUITS:

1. Load shedding and adding logic control to add load as generator synchronizes and is connected to emergency bus and to reduce load on emergency bus in case of failure of engine generator. Upon restoration of the failed engine generator, automatically add load to bus.

2. Provide load shedding with multiple levels of shedding to be determined by the customer prior to generator running and connected to the emergency bus.

3. Provide relay pilot contacts, to signal load add/dump. Provide control relays of same quality and type as others in master control cubicle.

4. Provide generator bus under-frequency protection through frequency monitor utilizing full cycle sensing, responding to fundamental frequency of system. Reduction of bus frequency to 58 Hertz or less for a period of 2 seconds or more to initiate load shedding.

Over/under frequency and over/under voltage sensors to detect abnormal condition on emergency bus.

1. Over/under voltage and over frequency failure causes alarm horn to sound and red fail lamp to light.

2. Under frequency condition initiates load shedding as well as sounding alarm horn and lighting red fail lamp.

Derive DC control power for system logic from engine starting batteries. Power Control logic from battery or combination of batteries assuring continuity of power until last battery is no longer available.

Transition of control logic power from battery combination to other battery combination to be accomplished without disruption in power flow.

Control power system prevents feedback to failing battery.

2.08 PILOT LIGHTS

Industrial control rated "press to test" type.

2.09 CIRCUIT BREAKER CONTROL POWER

A. CIRCUIT BREAKER CONTROL POWER:

1. Separate DC power supply for circuit breaker operation incorporating charger, batteries, disconnects, and associated accessories and control wiring.

2. Provide separate AC or DC control power transformer at each breaker for close and charge the breaker.

3. Battery charger capable of operating as a DC power supply when batteries are discharged and input power is available. Provide best battery system.

   - 24 Vdc or 125 Vdc output adjustable +/- 10%; output regulation +/- 0.5%; output current adjustable 80% to 120% of rating.

   - AC input surge suppressors, MOV type.

   - Operating temperature 0C to 50C; storage temperature -40C to 85C.

4. Rack mounted, wet cell, nickel cadmium or lead acid batteries.

   - Individually mounted 1.4 Vdc /cell, encased in high strength polypropylene plastic.

   - Flame arresting flip-top vents.

   - Assembled batteries shall be capable of providing 90% of the required current after 1 hour with an end voltage of not less than 1.14 Vdc / cell.

5. Provide welded steel, painted racks owing no more than two rows vertically.

6. Local indication of the following:

   - Control Power Input Voltage
   - Control Power DC Current
   - Control Power DC Voltage

7. Provide terminals for remote monitoring of the following:

   - Control Power Input Voltage
   - Control Power DC Current
   - Control Power DC Voltage

2.10 SOLID STATE DEVICES

Capable of withstanding transient voltage surges without damage. To establish conformance with the above, manufacturer must verify identical samples have been subjected to the following test:

1. Power and control terminals capable of withstanding test voltage of 1500 volts, 60-Hertz. to ground for 1 minute. Elements of system designed and tested to withstand without damage, change or failure to function properly. Synchronizer capable of meeting dielectric and surge withstand capabilities as set forth in IEEE standard 472-1974/ANSI C. 37, 90A-1974 Specifications.

2. Surge withstand capability test wave to be oscillatory with nominal frequency of 1.0 to 1.5 MHz, crest value of 2.5 KV at first half cycle peak, and envelope decaying to 50 percent of crest value of first peak in 10 microseconds from start of wave.

3. Test wave surge generators source impedance to be 150 ohms. Apply test wave to output at repetitive rate of not less than 50 tests per second for period of 2.0 seconds.

4. Measure voltage and time values with open circuit condition on surge generator.

2.11 FAIL LOCKOUT AND ALARM SYSTEM

Provide engine generator unit with separate fail relays and fail lights to shutdown engine generator, disconnect it from main bus, and illuminate light to indicate nature of failure.

2.12 REMOTE MONITORING

Wire auxiliary N.O. / N.C. interchangeable relays to terminal strip for audible and visual signal on engine generator set control cubicle and master cubicle with one additional relay to indicate engine generator set carrying load.

Sense engine generator carrying load using relay connected to primary terminal of engine generator set main circuit breaker.

All alarm points and shutdown functions shall be available via communications to the Plant’s SCADA monitoring and controls systems ; including signaling that the generator(s) are carrying load.

2.13 SYSTEM PROGRAMMABLE LOGIC CONTROLLER

Provide programmable logic controllers (PLCs) incorporate into switchgear. The primary or master and standby or redundant backup controllers shall be connected by a fiber optic link or high speed network cable. Distributed PLC systems are acceptable. These systems include multiple PLCs, which may include a PLC for each generator, utility breaker, tie breaker and a common PLC for distribution breakers.

Failure of one PLC shall be transparent. The master and redundant PLC must utilize a “hot standby” option. The master or primary CPU processor shall execute the control program when on line. In the event of a failure of the primary CPU, the standby CPU shall come on line and execute the PLC program.

Transition shall be “seamless”. Automatic operation of circuit breakers shall be controlled by the programmable logic controller through Remote I/O modules. Connection with the Remote I/O modules shall be PLC programming for system operation shall be the responsibility of this manufacturer.

PLC, digital metering, and controls communication shall be either Modbus or Modbus Plus to the local devices. Communication to the Plant Control System shall be via Ethernet IP or Modicon TCPIP protocol.

The PLC shall be supplied with single 120 Vac or 24 Vdc power source. Power system shall be sized to maintain sufficient control power to the PLC during breaker operation.

PLC hardware and software shall be fail-safe. If the software encounters a condition not anticipated, it shall stop and await direction. It shall be possible to back out of an unanticipated condition. Under some conditions, the software shall propose an action and await confirmation from an operator before taking the action. Detailed operation of the software shall be worked out in conjunction with the vendors at the time shop drawings are released.

PLC Software Validation. The Vendor shall demonstrate a software quality assurance program aimed at comprehensively eliminating software bugs prior to factory testing. Functions shall be tested on an engineering software simulator by someone different than the person responsible for the original code of any subsequent changes.

The factory testing program shall be designed to test multiple combinations of variables, particularly those that shall be difficult to test in the field.

Develop and implement an organized plan for ensuring previous software corrections or enhancements developed for previous clients have been incorporated in this project. Configuration management processes must be capable of identifying code changes and software revision levels.

2.14 REMOTE I/O

Provide Remote I/O racks installed in each at applicable location as follows:

1. Remote I/O racks shall be installed where distance permits.

2. The remote racks shall be controlled by the master PLC rack.

3. Remote I/O communications shall be Modicon TCPIP or Modbus Plus to the master PLC.

4. Provide interposing relays for outputs to motorized breakers.

5. Relays shall be mounted on a single backplane and wired through labeled terminal blocks.

2.15 CONDUIT AND WIRING

Provide conduit, wiring, cabling, terminations etc. to provide a complete and operational system meeting the performance requirements set forth in the Construction Documents.

Provide compression type lugs for terminations.

2.16 SOURCE QUALITY CONTROL

1. Tests
2. Manufacturer/Shop Inspections
3. Verification of Performance

PART 3—EXECUTION

3.01 PREPARATION

Stand-alone concrete base spec section has been created as Section 03370. This section must be issued for concrete bases.

Concrete base/equipment pad shall be provided in compliance with drawings and specifications.

3.02 INSTALLATION

A. GENERAL:

1. Comply with manufacturer's recommendations.

2. Coordinate with Owner and Engineer to determine load priority for load.

3. Manufactures' representative shall meet with Owner at time of final acceptance tests and to review operation and parts books, correct starting and recommend preventive maintenance procedures.

4. Deliver generator control synchronizing switchgear to site in separate sections for easy assembly in the field by Contractor.

3.03 DEMONSTRATIONS

Factory trained technician on site for 24 hours of Operator training.

The manufacturer shall provide a minimum of 8 hours of onsite assistance to the end user for integration of the system in the Owner's Plant Control System.

END OF SECTION

SECTION 16431

ARC FLASH ANALYSIS, SHORT CIRCUIT STUDY, AND PROTECTIVE DEVICE COORDINATION REPORT

PART 1--GENERAL

1.01 DESCRIPTION

A. GENERAL:

This section specifies that the Contractor subcontract an independent full member NETA Engineering and Study Firm / Testing Firm to prepare:

1. Electrical equipment short circuit study (SCS) for the new equipment being installed.

2. Protective device coordination study (PDCS) report for all equipment in the facility electrical distribution power system.

3. Arc flash analysis (AFA) and labeling for all equipment.

The Testing Firm shall be as described in Section 16030 and shall also be responsible for the electrical testing described therein.

B. SCOPE:

The Short Circuit and Protective Device Coordination Report shall include analysis including Utility Company equipment that affect the installed equipment's short circuit ratings, protective device ratings and protective device settings.

Report shall also include analysis of the equipment's short circuit ratings, protective device ratings and protective device settings affected by the installed equipment.

Report shall include the results of the arc flash hazard analysis study for energized electrical equipment in accordance with the methods outlined in IEEE Standard 1584 and stated hereinafter.

Work shall include the fabrication of signs with the arc flash hazard study results and the installation of the signs on the equipment in accordance with NFPA 70E Table 3-3.9.3 that includes the personnel protective equipment (PPE) risk category, the energy available, and the clothing recommendation.

1.02 REFERENCES

This section contains references to the following documents. They are a part of this section as specified and modified. Where a referenced document contains references to other standards, those documents are included as references under this section as if referenced directly. In the

event of conflict between the requirements of this section and those of the listed documents, the requirements of this section shall prevail.

Unless otherwise specified, references to documents shall mean the documents in effect at the time of Advertisement for Bids or Invitation to Bid (or on the effective date of the Agreement if there were no Bids). If referenced documents have been discontinued by the issuing organization, references to those documents shall mean the replacement documents issued or otherwise identified by that organization or, if there are no replacement documents, the last version of the document before it was discontinued. Where document dates are given in the following listing, references to those documents shall mean the specific document version associated with that date, regardless of whether the document has been superseded by a version with a later date, discontinued or replaced.

Reference	Title
IEEE 141	Recommended Practice for Electric Power Distribution for Industrial Plants
IEEE 242	Recommended Practice for Protection and Coordination of Industrial and Commercial Power Systems
NETA ATS	Acceptance Testing Specifications for Electrical Power Distribution Equipment and Systems, 1999

1.03 SCHEDULE

The report shall be completed, submitted to the Engineer for acceptance and reworked to include the Engineer comments and corrections, as required. **The report shall be approved by the Engineer prior to purchase and fabrication of electrical equipment including switchgear.**

A copy of the Engineer accepted report shall be sent by the Contractor to all affected manufacturers prior to fabrication.

1.04 SUBMITTALS

The report specified in this Section shall be provided in accordance with Section 01300.

PART 2--PRODUCTS

2.01 REPORT

The product shall be a certified report summarizing the short circuit and coordination study and conclusions or recommendations which may affect the integrity of the electric power distribution system. As a minimum, the report shall include the following:

1. The equipment manufacturer's information used to prepare the study.

2. Power Utility Company system information applicable to the project.

3. Short circuit calculations listing short circuit levels at each bus. Provide a sketch of the bus and use both the project term and the bus-code-name to identify the bus, branches, sources, loads. Base the system on the Project One-Line diagram.

4. Coordination study time-current curves including the instrument transformer ratios, model numbers of the protective relays, and the relay settings associated with each breaker.

5. Comparison of short circuit duties of each bus to the interrupting capacity of the equipment protecting that bus.

6. Data used as input to the report that includes cable impedances, source impedances, equipment ratings for the equipment being purchased for the project, etc.

7. Assumptions made during the study.

PART 3--EXECUTION

3.01 GENERAL

Provide a short circuit and coordination study on the electrical power distribution system as specified and as described in Section 6.1 of NETA ATS. The studies shall be performed in accordance with IEEE Standards 141 and 242 and shall utilize the ANSI method of short circuit analysis in accordance with ANSI C37.010.

The studies shall be performed using actual equipment data for both existing and new equipment. The coordination study shall use the data from the same manufacturer of protective relay devices as being provided by the switchgear manufacturer.

For new equipment, the Contractor shall provide copies of final reviewed equipment submittals upon request by the Study Firm.

3.02 QUALIFICATIONS

The short circuit and coordination report shall be performed by the Testing Firm as described in Section 16030. The studies shall be signed by the professional electrical engineer responsible for the studies and registered to practice engineering in the state in which the project is located.

3.03 SHORT CIRCUIT STUDY

The Contractor shall be responsible to obtain and verify all data needed to perform the study. As a minimum, the short circuit study shall include the following:

A. ONE-LINE DIAGRAM:

1. Location and function of each protective device in the system, such as relays, direct-acting trips, fuses, etc.

2. Type designation, current rating, range or adjustment, manufacturer's style and catalog number for all protective devices.

3. Power, voltage ratings, impedance, primary and secondary connections of all transformers.

4. Type, manufacturer, and ratio of all instrument transformers energizing each relay.

5. Nameplate ratings of all motors and generators with their subtransient reactances. Transient reactances of synchronous motors and generators and synchronous reactances of all generators.

6. Sources of short circuit currents such as utility ties, generators, synchronous motors, and induction motors.

7. Significant circuit elements such as transformers, cables, breakers, fuses, reactors, etc.

8. Emergency as well as normal switching conditions, as applicable.

9. The time-current setting of existing adjustable relays and direct-acting trips, as applicable.

B. IMPEDANCE DIAGRAM:

1. Available MVA, voltage, and impedance from the power utility company.

2. Local generated capacity impedance.

3. Bus impedance.

4. Transformer and/or reactor impedances.

5. Cable impedances.

6. Equipment impedances.

7. System voltages.

8. Grounding scheme for the project: resistance grounding, solid grounding, or no grounding.

C. CALCULATIONS:

1. Determine the paths and situations where short circuit currents are the greatest.

2. Study shall address bolted faults and calculate the 3-phase and line-to-ground short circuits of each case.

3. Calculate the maximum and minimum fault currents.

3.04 ARC FLASH ANALYSIS

The Contractor shall be responsible to obtain and verify all data needed to perform the study. The arc flash analysis study shall include the following IEEE Standard 1584 nine step analysis process:

1. Collect system and installation data.

2. Determine modes of operation.

3. Determine bolted fault current.

4. Determine arc fault current.

5. Determine protective device characteristic and arc fault duration.

6. Document system voltages and equipment class.

7. Select working distances.

8. Calculate incident energy.

9. Calculate the arc flash protection boundary.

3.05 PROTECTIVE DEVICE COORDINATION STUDY

As a minimum, the coordination study for the power distribution system shall include the following on 5-cycle, log-log graph paper:

1. Time-current for each protective relay or fuse showing graphically that the settings will provide protection and selectivity within industry standards. Each curve shall be identified, and the tap and time dial settings shall be specified.

2. Time-current curves for each device shall be positioned to provide for maximum selectivity to minimize system disturbances during fault clearing. Where selectivity cannot be achieved, the Engineer shall be notified as to the cause.

3. Time-current curves and points for cable and equipment damage.

4. Circuit interrupting device operating and interrupting times.

5. Indicate maximum fault values on the graph.

6. Sketch of bus and breaker arrangement.

3.06 IMPLEMENTING PDCS SETTINGS AND ARC FLASH SIGN INSTALLATION

The Testing Firm shall implement the protective device coordination study settings on new and existing equipment as required in Section 16030, based on the Engineers accepted Protective Device Coordination Report specified herein and submit a final amended report of the Record As-Built electrical equipment protective device settings subsequent to start-up and testing.

The Testing Firm shall work with the Contractor and the Study Firm for implementing the Arc Flash Hazard sign installation requirements for electrical equipment as specified in NEC Article 110.16 Flash Protection and NFPA 70E.

END OF SECTION

SECTION 16440

INSTRUMENT TRANSFORMERS, METERS, SWITCHES AND ACCESSORIES

PART 1--GENERAL

1.01 DESCRIPTION

This section specifies instrument transformers, meters, test switches and accessories for electrical distribution equipment assemblies.

1.02 REFERENCES

This section contains references to the following documents. They are a part of this section as specified and modified. Where a referenced document contains references to other standards, those documents are included as references under this section as if referenced directly. In the event of conflict between the requirements of this section and those of the listed documents, the requirements of this section shall prevail.

Unless otherwise specified, references to documents shall mean the documents in effect at the time of Advertisement for Bids or Invitation to Bid (or on the effective date of the Agreement if there were no Bids). If referenced documents have been discontinued by the issuing organization, references to those documents shall mean the replacement documents issued or otherwise identified by that organization or, if there are no replacement documents, the last version of the document before it was discontinued. Where document dates are given in the following listing, references to those documents shall mean the specific document version associated with that date, regardless of whether the document has been superseded by a version with a later date, discontinued or replaced.

Reference	Title
ANSI C37.20	Switchgear Assemblies Including Metal-Enclosed Bus
ANSI C39.1	Requirements for Electrical Analog Indicating Instruments
ANSI C57.13	Requirements for Instrument Transformers

PART 2--PRODUCTS

2.01 INSTRUMENT TRANSFORMERS

A. GENERAL:

Instrument transformers shall be molded dry-type in accordance with ANSI C57.13. Transformer volt-ampere rating shall be suitable for carrying the specified load without overheating or exceeding the permissible accuracy for the transformer.

B. POTENTIAL TRANSFORMERS:

Potential transformers shall have an ANSI accuracy class of 0.3. They shall be equipped with current limiting fuses.

C. CURRENT TRANSFORMERS:

Current transformers shall be furnished with the specified ratios. The accuracies shall conform to ANSI C37.20.

2.02 PANEL METERS AND POWER MONITORS

All indicating meters shall be 4-1/2-inch square, semi-flush mounted switchboard type. The movement shall be taut-band with an accuracy of plus or minus 1 percent of full scale. The case shall be black. The scale shall be white with black markings. The length of the scale shall be greater than 7 inches over a deflection angle of 250 degrees. The meters shall be manufactured in accordance with applicable requirements of ANSI C39.1.

Power Monitors and Analyzers shall be the standard product of the electrical equipment manufacture with the standard electrical parameter selection and display.

Power Monitors are required on all new electrical equipment: switchgear, switchboard, motor control center, automatic transfer switch to provide electrical parameter information about the electrical equipment for any voltage class. Two power monitors are required for double-ended and dual feed electrical equipment.

Power Monitors, where shown on the drawings, shall have the following outputs:

1. Phase-Phase Voltage
2. Average Current
3. Power Factor or VARs
4. Kilo-Watt Hours

Power Analyzer Monitor combination units, where shown on the drawings, shall have harmonic analyzer ability that displays the voltage / current harmonic and the Total Harmonic Distortion for the electrical equipment being monitored.

Provide manufacture standard power monitor with outputs via Ethernet TCP/IP data communication protocol.

2.03 INSTRUMENT SWITCHES

Instrument switches shall be provided with contact blocks and positions specified. Switches shall be of the rotary-cam type and contacts shall have positive wiping action of silver-to-silver contact buttons. Switches shall be provided with escutcheon plates and pistol-grip handles. Switches shall be General Electric, SBM; Siemens, ABB equal.

Voltmeter and ammeter switches, pushbuttons or that like to allow four positions with the escutcheon legend as follows:

Voltmeter	OFF	1-2	2-3	3-1
Ammeter	OFF	Phase A	Phase B	Phase C

2.04 KEY INTERLOCK

Where specified, the key interlock shall consist of two or more identically keyed brass bolt locks. The bolt on the lock shall prevent the operation of the electrical equipment. One brass key shall be provided for each group of identical locks. The key shall be held captive when the lock is positioned to allow equipment operation.

2.05 INDICATING LIGHTS

Indicating lights shall be resistor type of the voltage specified.

2.06 NAMEPLATES

Nameplates shall be provided in accordance with Section 16000.

2.07 PRODUCT DATA

The following information shall be provided in accordance with Section 01300:

1. Operation and maintenance items as specified in Section 01730.

2. Manufacturer's product data with features and dimensions of devices.

3. Burden, accuracy class, and ratio data for instrument transformers.

PART 3--EXECUTION

Accessories and devices shall be installed per the electrical distribution equipment manufacturer's instructions.

END OF SECTION

SECTION 16445

SURGE PROTECTIVE DEVICES

PART 1--GENERAL

1.01 DESCRIPTION

Surge Protective Devices (SPD) replaces the Transient Voltage Surge Suppressors (TVSS) based on the National Electrical Code requirements.

A. SCOPE:

Provide SPD with electrical characteristics and ratings for service entrance equipment, switchgear, switchboards, motor control centers, and panelboards specified in the Division 16 electrical distribution equipment specification sections or indicated on the Drawings. Provide SPD with the same voltage, phase, 3 or 4 wire system as the host electrical equipment.

SPD equipment is to be installed as shown on the drawings and/or as required by these specifications.

1.02 QUALITY ASSURANCE

A. REFERENCES:

This section contains references to the following documents. They are a part of this section as specified and modified. Where a referenced document contains references to other standards, those documents are included as references under this section as if referenced directly. In the event of conflict between the requirements of this section and those of the listed documents, the requirements of this section shall prevail.

Unless otherwise specified, references to documents shall mean the documents in effect at the time of Advertisement for Bids or Invitation to Bid (or on the effective date of the Agreement if there were no Bids).

If referenced documents have been discontinued by the issuing organization, references to those documents shall mean the replacement documents issued or otherwise identified by that organization or, if there are no replacement documents, the last version of the document before it was discontinued.

Where document dates are given in the following listing, references to those documents shall mean the specific document version associated with that date, regardless of whether the document has been superseded by a version with a later date, discontinued or replaced.

Reference	Title
ANSI / Underwriters Laboratories 1449 3rd Edition	Surge Protective Devices

Reference	Title
Underwriters Laboratories 1283 3rd Edition	Electromagnetic interference filter for noise attenuation
MIL STD 220A, Rev A, Change Notice #2	Method of Insertion Loss Measurement
National Electrical Code 2008 Article 285	Surge-Protective Devices (SPDs), 1 kV or Less
NEMA LS-1	National Electrical Manufactures Association: Low Voltage Surge Protective Devices
C-UL	Canadian Underwriters Laboratories
ANSI / IEEE C62.41	American National Standards Institute/Institute of Electrical and Electronic Engineering Inc.

1.03 RELATED SPECIFICATIONS

A. DIVISION 16:

1. Section 16310 - Switchgear
2. Section 16311 - Switchboards
3. Section 16470 - Panelboards
4. Section 16920 - Motor Control Centers

1.04 SUBMITTALS

The following information shall be submitted to the Engineer:

Submittals and transmittal procedures for submittals are defined in Section 01300. Submittals should be required for the following conditions:

1. A copy of this specification section, with addendum updates included, and all referenced and applicable sections, with addendum updates included, with each paragraph check-marked to indicate specification compliance or marked to indicate requested deviations from specification requirements. Check marks shall denote full compliance with a paragraph as a whole.

2. If deviations from the specifications are indicated, and therefore requested by the Contractor, each deviation shall be underlined and denoted by a number in the margin to the right of the identified paragraph, referenced to a detailed written explanation of the reasons for requesting the deviation. The Engineer shall be the final authority for determining acceptability of requested deviations. The remaining portions of the paragraph not underlined will signify compliance on the part of the Contractor with the specifications.

3. Failure to include a copy of the marked-up specification sections, along with justification(s) for any requested deviations to the specification

requirements, with the submittal shall be sufficient cause for rejection of the entire submittal with no further consideration.

4. A copy of the contract document control diagrams and process and instrumentation diagrams relating to the submitted equipment, with addendum updates that apply to the equipment in this section, marked to show specific changes necessary for the equipment proposed in the submittal. If no changes are required, the drawing or drawings shall be marked *"no changes required"*. Failure to include copies of the relevant drawings with the submittal shall be cause for rejection of the entire submittal with no further review."

5. Provide verification that the SPD complies with the required ANSI/UL 1449 3rd Edition listing by Underwriters Laboratories (UL) or other Nationally Recognized Testing Laboratory (NRTL).

6. Compliance: File number verified on UL's website or other NRTL's website, with the following information:

   a. Model number
   b. SPD Type
   c. System voltage, phases
   d. Protection modes
   e. Voltage Protection Rating (VPR)
   f. Nominal Discharge Current (In).

7. Drawings showing unit dimensions, weights, installation instruction details, and wiring configuration for sidemount SPD mounted external to electrical assembly.

1.05 PRODUCT DATA

The following information shall be submitted:

1. Final Record as-built drawings and information.

1.06 QUALIFICATIONS

The manufacturer of the assembly shall be the manufacturer of the major components within the assembly.

The manufacturer shall be ISO 9001 or ISO 9002 certified for the equipment specified herein.

The manufacturer shall have produced similar electrical equipment for a minimum period of 5 years.

1.07 DELIVERY, STORAGE AND HANDLING

Equipment shall be handled and stored in accordance with manufacturer's instructions.

One copy of manufacturer's instructions shall be included with the equipment at time of shipment.

1.08 OPERATION AND MAINTENANCE MANUALS

Operation and maintenance manuals shall be provided with each SPD shipped.

PART 2--PRODUCTS

2.01 MANUFACTURERS

The listing of manufacturers does not imply acceptance of products that do not meet the specified ratings, features, and functions. Manufacturers listed shall meet the specifications in their entirety.

Products in compliance with the specification and manufactured by others not named will be considered if pre-approved by the Engineer ten days prior to bid date.

1. ABB
2. Eaton Cutler-Hammer
3. General Electric
4. Siemens
5. Accepted equal

2.02 SURGE PROTECTIVE DEVICES

A. ELECTRICAL REQUIREMENTS:

1. Refer to drawings for operating voltage and unit configuration.

2. Maximum Continuous Operating Voltage (MCOV): Not be less than 125% of the nominal system operating voltage.

3. SPD suppression system include thermally protected metal-oxide varistors (MOVs) as the core surge suppression component for the service entrance and other distribution levels.

4. The system shall not utilize silicon avalanche diodes, selenium cells, air gaps, or other components that may lead to system upset or create environmental hazards.

5. SPD shall protect all modes of the electrical system being utilized. The required protection modes are indicated by bullets in the following table:

	Protection modes			
Configuration	L-N	L-G	L-L	N-G
Wye	●	●	●	●
Delta	N/A	●	●	N/A
Single Split Phase	●	●	●	●
High Leg Delta	●	●	●	●

6. Nominal Discharge Current (In): SPDs applied to the distribution system shall have a 20kA In rating that include Types 1 and 2 or operating voltage. SPD's with "In" that is less than 20kA, shall be rejected.

7. Voltage Protection Rating (VPR): The maximum VPR for the device shall not exceed the following:

Modes	208Y/120	480Y/277	600Y/347
L-N; L-G; N-G	700	1200	1500
L-L	1200	2000	3000

B. SURGE PROTECTIVE DEVICE DESIGN:

1. SPDs containing replaceable modules, replaceable fuses, replaceable batteries, requiring maintenance, or requiring diagnostic test kit shall not be accepted.

2. BALANCED SUPPRESSION PLATFORM: The surge current shall be equally distributed to MOV components for equal stressing with equal impedance paths to each matched MOV.

3. ELECTRICAL NOISE FILTER: EMI/RFI noise rejection filter for noise attenuation of line noise of 50 dB from 10 kHz to 100 MHz using the MIL-STD-220A insertion loss test method.

4. INTERNAL CONNECTIONS: Plug-in component modules or printed circuit boards shall not be used as surge current conductors. Components shall be soldered, hardwired with connections utilizing low impedance conductors.

5. MONITORING DIAGNOSTICS: SPD monitoring:

a. STATUS: Green / red solid-state indicator light for status of the protection on each phase.

(1) For wye configured units, provide indicator lights for status of protection elements and circuitry in the L-N and L-G modes and in the N-G mode.

(2) For delta configured units, provide indicator lights status of protection elements and circuitry in the L-G and L-L modes.

(3) The absence of a green light and the presence of a red light shall indicate that damage has occurred on the respective phase or mode.

(4) Status indicators indicate the protection on each phase or mode. If power is removed from any one phase, the indicator lights shall indicate the status of the protection on other phases and protection modes.

b. REMOTE ALARM: Provide Form C dry contacts (one NO and one NC) for remote annunciation. Both contacts change state under fault condition.

c. AUDIBLE ALARM AND SILENCE BUTTON: Audible alarm activates upon fault conditions. Alarm silence button silences the audible alarm.

d. SURGE COUNTER: LCD display indicates number of surges and trigger each time a surge event with a peak current magnitude of a minimum of 50 ± 20A occurs. A reset pushbutton allows the surge counter to be zeroed and contains a mechanism to prevent accidental resetting of the counter.

6. Overcurrent Protection:

a. The unit shall contain thermally protected MOVs shall disconnect the MOV(s) from the system during a thermal runaway condition.

7. DESIGN: SPD's components and diagnostics shall be contained within one discrete assembly.

8. Safety Requirements:

a. SPD shall minimize potential arc flash hazards by containing no user serviceable / replaceable parts.

b. SPD's designed to interface with the electrical assembly via conductors shall require no user contact with the inside of the unit and required conductors be factory installed.

c. Sidemount SPD's shall be factory sealed in order to prevent access to the inside of the unit with factory installed phase, neutral, ground and remote alarm contacts shall have conductors protruding outside of the enclosure for field wiring.

2.03 SYSTEM APPLICATION

SPD include distribution and branch panel locations, busway, motor control centers (MCC), switchgear, and switchboard assemblies tested and demonstrate suitability for application within ANSI/IEEE C62.41 Category C, B, and A environments.

The minimum surge current capacity:

Minimum surge current capacity based on ANSI / IEEE C62.41 location category			
Category	Application	Per Phase	Per Mode
C	Service Entrance Locations, Switchboards, Switchgear, MCC, Main Entrance	250 kA	125 kA
	High Exposure Roof Top Locations and Distribution Panelboards	160 kA	80 kA
A	Branch Locations: Panelboards, MCCs, Busway	120 kA	60 kA

SPDs installed on the line side of the service entrance disconnect: Type 1.

SPDs installed on the load side of the service entrance disconnect: Type 1 or 2.

2.04 PANELBOARDS

SPD application includes lighting and distribution panelboards, tested for application within ANSI/IEEE C62.41 Category B environments.

1. SPD shall not limit the use of through-feed lugs, sub-feed lugs, and sub-feed breaker options.

2. SPD's installed following the load side of the main breaker and in main lug only panelboards installed following the incoming main lugs.

3. SPD interfaced to the panelboard via a direct bus bar connection. Or SPD connected to a 30A circuit breaker for disconnecting purposes may be installed using short lengths of conductors integrally to the SPD and located directly adjacent to the 30A circuit breaker.

4. SPD shall be mounted within the panelboard by the manufacturer.

5. SPD shall be of the same manufacturer as the panelboard.

6. Panelboard including the SPD shall be UL67 listed.

Sidemount mounting (SPD mounted external to electrical assembly):

1. Lead length between the breaker and suppressor shall be short as possible.

A. SWITCHGEAR, SWITCHBOARD, MCC AND BUSWAY REQUIREMENTS:

1. Service entrance located SPD's shall be tested within ANSI/IEEE C62.41 Category C environments.

2. SPD shall be of the same manufacturer as the switchgear, switchboard, MCC, and busway.

3. SPD shall be factory installed inside the switchgear, switchboard, MCC, and/or bus plug at the assembly point by the original equipment manufacturer.

4. Locate SPD on the load side of the main disconnect device, close to the phase conductors and the ground/neutral bar.

5. SPD connected through a disconnect (30A circuit breaker) located in immediate proximity to SPD. Connection shall be made via bus, conductors, or other connections originating in the SPD shall be as short as possible per the factory specifications.

6. Monitoring and diagnostic features shall be visible on the front of equipment.

2.05 ENCLOSURES

Enclosed equipment shall have enclosures:

1. NEMA 1: Constructed of polymer for units integrated within electrical assemblies or steel for sidemount units for indoor use that provide protection against the ingress of solid foreign objects and falling dirt.

2. NEMA 4: Constructed of steel intended for either indoor or outdoor use to provide protection against access to hazardous parts; to provide protection from the ingress of rain, sleet, snow, splashing water, and hose directed water; and undamaged by the external formation of ice on the enclosure on sidemount units.

3. NEMA 4X: Constructed of stainless steel providing the same level of protection as the NEMA 4 enclosure with the addition of corrosion protection on sidemount units.

PART 3--EXECUTION

3.01 GENERAL

Host equipment Manufacturer's representative shall visit the site, verify installation and testing, and verify that the SPD equipment and SPD installation meets intent of the Contract Documents and manufacturer's warranties and that the guarantees are in effect.

3.02 INSTALLATION

Install according to manufacturers recommendations.

Lead lengths shall not exceed manufactures recommendation.

Electrical equipment manufacturer shall authorize and perform bus taps connections, as necessary.

3.03 TRAINING

Provide a minimum of 1-hours of training for similar SPD systems and conforming to the requirements of Section 01664. Training shall be certified on Form 11000-B specified in Section 01999.

3.04 WARRANTY

The manufacturer shall provide a 10-year warranty from the date of shipment against any SPD part failure when installed in compliance with manufacturer's written instructions and applicable national or local code.

END OF SECTION

SECTION 16446

LIGHTNING PROTECTION SYSTEM

PART 1—GENERAL

1.01 DESCRIPTION

A. SCOPE:

1. Contractor shall provide the lightning protection system design by a qualified Lightning Protection System (LPS) firm registered to design lightning protection systems.

2. Contractor shall furnish and install a complete lightning protection system for the following facilities and structures:

   a. Main Treatment Facility Building

3. Contractor shall test and certify that the lightning protection system design, installation, and testing comply with the lightning protection industry standards as applied to the project facilities and structures.

4. Contractor shall provide the LPS firm with the plant or facilities drawings that indicate the equipment, buildings, structures, and HVAC equipment as the basis for their design work.

5. Contractor shall submit the design drawing to the Design Review Agency for approval and to the Engineer for reference.

B. COORDINATION:

1. Lightning Protection Systems design shall be arranged in accordance with the class of structure to be protected.

2. Coordinate arrangement and connections with roof system proposed for use and roof mounted equipment. Refer to the structural and architectural drawings provided by the Contractor.

C. RELATED SECTIONS:

Contractor shall coordinate the requirements of the Work in this Section along with the requirements of the sections listed:

1. Section 16000 – Electrical
2. Section 16110 – Raceways, Boxes and Supports
3. Section 16450 - Grounding Systems.

1.02 QUALITY ASSURANCE

A. QUALITY CONTROL:

1. Lightning protection system materials shall be the standard product of a manufacturer regularly engaged in the production of lightning protection systems.

2. Materials shall comply in weight, size, and composition for the class of structure to be protected.

3. Lightning protection systems shall be installed under the direct supervision of a Lighting Protection System Certified Master Installer.

B. CERTIFICATION REQUIREMENTS:

1. Provide and submit Master Installer Certified forms for the following:

   a. Form LP1-175A - Jobsite Witness of Grounding Connections.
   b. Form LP1-175B - Post-Installation Inspection.
   c. UL Master Label C.

C. REFERENCES:

This section contains references to the following documents. They are a part of this section as specified and modified. Where a referenced document contains references to other standards, those documents are included as references under this section as if referenced directly. In the event of conflict between the requirements of this section and those of the listed documents, the requirements of this section shall prevail.

Unless otherwise specified, references to documents shall mean the documents in effect at the time of Advertisement for Bids or Invitation to Bid (or on the effective date of the Agreement if there were no Bids). If referenced documents have been discontinued by the issuing organization, references to those documents shall mean the replacement documents issued or otherwise identified by that organization or, if there are no replacement documents, the last version of the document before it was discontinued. Where document dates are given in the following listing, references to those documents shall mean the specific document version associated with that date, regardless of whether the document has been superseded by a version with a later date, discontinued or replaced.

Reference	Title
ANSI/IEEE C62.1	Surge Arresters for AC Power Circuits
ANSI/IEEE C62.11	Metal-Oxide Surge Arresters for Alternating Current Power Circuits
LP1-174	Lightning Protection Institute Installation Code
LP1-175	Lightning Protection Institute Standard of Practice

Reference	Title
NEC	National Electrical Code (NEC): Article 230 – Services Article 250 – Grounding Article 280 – Surge Arrestors Article 501 – Class I Locations Article 502 – Class II Locations Article 800 – Communications Circuits
NFPA-780	Lightning Protection Code
UL Standard No. 96	Lightning Protection Components
UL Standard No. 96A	Master Label Provisions

1.03 SUBMITTALS

A. SHOP DRAWINGS:

The following submittals shall be provided in accordance with Section 01300:

1. Manufacturers technical information for materials proposed for use.

2. Complete scaled drawings identifying the system arrangement and equipment connections for each building.

3. Drawings shall include equipment connection details, down-lead details, routing of system conductors, and locations of air terminals.

B. MASTER LABEL CERTIFICATES:

1. Submit certificates for LP1 Code Compliance together with UL Master Label C certificates.

PART 2—PRODUCTS

2.01 MATERIALS

A. MATERIALS:

1. GENERAL: System materials shall be copper and high copper-content bronze castings.

a. Fittings, except cable holders, shall be heavy-duty type made from bronze castings.

b. Terminal rods, bolts, screws, and related type hardware shall be copper clad steel or brass to prevent galvanic corrosion.

2. COMPONENTS: The system shall consist of the necessary equipment as required to provide a complete and coordinated system. Cable and air terminals used shall bear the UL Label. The components shall consist of, but not limited to, the following:

a. Cables
b. Air terminals
c. Mounting bases
d. Fittings
e. Couplings
f. Connectors
g. Fasteners
h. Conduit
i. Pitch pads and weatherproof seals.

2.02 MANUFACTURERS

The Owner and Engineer believe the following candidate firms are capable of producing equipment and/or products that will satisfy the requirements of this Section. This statement, however, shall not be construed as an endorsement of a particular manufacturer's products, nor shall it be construed that named manufacturers' standard equipment or products will comply with the requirements of this Section.

The candidate detailed design, product manufacturer, and installation firm shall be one of the following or accepted equal:

1. Thompson Lightning Protection Inc.
2. AC Lightning Security.

Early Streamer Emission (ESE) is prohibited product system.

PART 3—EXECUTION

3.01 INSTALLATION

1. Verify field measurements as indicated on the drawings and as specified elsewhere herein.

2. Conceal system conductors where practical and main down-leads and roof risers shall be concealed within the building walls or columns.

3. Allow six foot minimum clearances as required by the NEC from:

a. Lightning rod conductors to non-current-carrying metal parts of electrical equipment unless they are bonded to the rods;

b. Lightning conductors to open conductors of communications systems;
c. Lightning protection grounding electrodes to electrodes of other grounding systems.

4. Do not use lightning protection rods and electrodes in place of the grounding electrodes for electrical equipment.

5. Run leads in conduits as specified in 16110. Down conductors shall be concealed in the building structure.

6. Terminate upper end above floor ceiling, utilize through-roof connectors for cable roof penetrations. Conduit terminations at lower end to be 6-inch above finished ground level, to pinpoint locations during future inspections.

7. Bond metallic objects and systems at roof level.

8. Primary bonds using appropriate fittings and full-size conductor:

   a. Roof intake and exhaust fans, HVAC units, ductwork, piping, ladders, skylights, stacks, vents, etc.
   b. Down-leads to steel column or major framing member at every down-lead position.

9. Secondary bond using secondary cable and fittings:

   a. Metal bodies of inductance located within six feet of a conductor
   b. Equipment with primary bond.

10. Connect to structure ground grid system using exothermic welds.

11. Insure installation of air terminals to withstand wind force equivalent to 100 miles per hour with a gust factor of 1.3 without structural damage and without damage to the integrity of the lightning protection system.

12. Interconnect the Lightning Protection System to the building grounding grid at one location. Suggest the design indicate the interconnection be on opposite side of the building's service entrance location.

** END OF SECTION **

SECTION 16450

GROUNDING SYSTEM

PART 1--GENERAL

1.01 DESCRIPTION

This section specifies the system for grounding electrical distribution and utilization equipment, including but not limited to cabinets, motor frames, manholes, instrumentation, metal surfaces of process/mechanical equipment that contain energized electrical components, metal structures and buildings, outdoor metal enclosures, fences and gates.

The Equipment Grounding Conductor shall ground or bond equipment, structures, or equipment frames to the Grounding Electrode System as defined in the National Electrical Code Article 250 and addressed herein.

The minimum size of the Equipment Grounding Conductors installed with the circuit conductors shall be per the National Electrical Code Table 250.122. The circuit grounding conductor size routed with a feeder or branch circuit conductors is as shown on the drawings.

1.02 REFERENCES

This section contains references to the following documents. They are a part of this section as specified and modified. Where a referenced document contains references to other standards, those documents are included as references under this section as if referenced directly. In the event of conflict between the requirements of this section and those of the listed documents, the requirements of this section shall prevail.

Unless otherwise specified, references to documents shall mean the documents in effect at the time of Advertisement for Bids or Invitation to Bid (or on the effective date of the Agreement if there were no Bids). If referenced documents have been discontinued by the issuing organization, references to those documents shall mean the replacement documents issued or otherwise identified by that organization or, if there are no replacement documents, the last version of the document before it was discontinued. Where document dates are given in the following listing, references to those documents shall mean the specific document version associated with that date, regardless of whether the document has been superseded by a version with a later date, discontinued or replaced.

Reference	Title
IEEE 81	Guide for Measuring Earth Resistivity, Ground Impedance, and Earth Surface Potentials of a Ground System
IEEE Std 81.2-1991	Guide to Measurement of Impedance and Safety Characteristics of Large, Extended or Interconnected Grounding Systems
NETA - ATS	International Electrical Testing Association Inc. - Acceptance Testing Specifications

Reference	Title
NFPA 70	National Electrical Code (NEC) Article 250

1.03 SUBMITTALS

The following information shall be submitted for review in accordance with Section 01300:

A. PRODUCT LITERATURE:

1. A copy of this specification section, with addendum updates included, and all referenced and applicable sections, with addendum updates included, with each paragraph check-marked to indicate specification compliance or marked to indicate requested deviations from specification requirements. A check mark shall denote full compliance with a paragraph as a whole. If deviations from the specifications are indicated, and therefore requested by the Contractor, each deviation shall be underlined and denoted by a number in the margin to the right of the identified paragraph, referenced to a detailed written explanation of the reasons for requesting the deviation. The Engineer shall be the final authority for determining acceptability of requested deviations. The remaining portions of the paragraph not underlined will signify compliance on the part of the Contractor with the specifications. *Failure to include a copy of the marked-up specification sections, along with justification(s) for any requested deviations to the specification requirements, with the submittal shall be sufficient cause for rejection of the entire submittal with no further consideration.*

2. Marked product literature for ground rods, test wells, and equipment ground plate.

PART 2--PRODUCTS

2.01 GROUND CONDUCTORS

The System Ground Conductor shall be soft-drawn, bare annealed copper, concentric stranded, as specified. The minimum sizes shall be as follows, where American Wire Gage (AWG) conductor sizes are not shown or specified:

5 and 15 kV switchgear	2/0 or 4/0 AWG
5 kV motor starters	2/0 or 4/0 AWG
15 kV-5 kV transformers	2/0 or 4/0 AWG
5 kV-480V transformers	2/0 or 4/0 AWG
480V switchgear	2/0 or 4/0 AWG
480V switchboards	2/0 or 4/0 AWG
480V MCC and	2/0 or 4/0 AWG
Cable tray	2/0 or 4/0 AWG
Large motors 250 hp & >	2/0 or 4/0 AWG

Lighting & Power panels	2 AWG
Exposed metal cabinets	2 AWG
Electrical equipment	2 AWG
Buildings and enclosure	2 AWG
Fences and gates	2 AWG
Motors 25 hp to 250 hp	2 AWG
Motors 1 hp to 25 hp	6 AWG

2.02 GROUND RODS

Ground rods shall be copper covered steel, 3/4-inch diameter and 10-feet long. Rods shall have threaded type removable caps so that extension rods of same diameter and length may be added where necessary.

2.03 COMPRESSION CONNECTORS

Compression connections shall be irreversible, cast copper as manufactured by Thomas and Betts, or equal.

2.04 BOLTED CONNECTORS

Bolted connectors shall be Burndy, O. Z. Gedney, or equal.

2.05 WELDED CONNECTORS

Exothermic welding products shall be Erico's Cadweld Plus system with a remotely operated battery powered electronic ignition device and moisture resistant weld metal cup for the required mold, or equal.

2.06 TEST WELLS

Provide concrete test well with cover and connect the ground grid extension using a removable connector.

2.07 EQUIPMENT GROUND BARS

Copper equipment ground bars shall be Erico Eritech EGB Series or equal, sized as required for the installation.

2.08 EQUIPMENT GROUND PLATE

Equipment ground plate shall be two-hole copper flush mounted grounding plate, Erico Cadweld, Burndy YGF Series, or equal.

2.09 PRODUCT DATA

Ground resistance readings specified in paragraph 16450-3.05 shall be provided in accordance with Section 01300.

PART 3--EXECUTION

3.01 GENERAL

Grounding system shall be provided in compliance with the NFPA 70 National Electrical Code (NEC). Grounding conductor shall not be used as a system neutral.

Embedded and buried ground connections shall be made by compression connectors utilizing diamond or hexagon dies and a hand compression tool for wire sizes 2 AWG and smaller and a hydraulic pump and compression head for wire sizes 2/0 AWG and larger. Alternate method allowed: exothermic welding using a remote igniter device.

Tools and dies shall be approved for this purpose; dimple compressions are not acceptable. Compression connections shall be prepared in accordance with the manufacturer's instructions. Compression-type lugs shall be used in accordance with manufacturer's recommendations. Exposed ground connections to equipment shall be made by bolted clamps unless otherwise specified. No solder material shall be used in any part of the ground circuits.

Embedded ground conductors and fittings shall be securely attached to concrete reinforcing steel with tie wires and prevented from displacement during concrete placement.

Notify the Engineer 2 hours prior to backfilling, as each part of the grounding system installed below finished grade is complete and ready for inspection. Non-compliance shall affect the payment schedule for this work.

Grounding conductors extended beyond concrete surfaces for equipment connection shall be extended a sufficient length to reach the final connection point without splicing. Provide grounding fittings, pads, or plates as shown in the electrical details. Minimum grounding conductor extension shall be 3-feet.

Grounding conductors which project from a concrete surface shall be located as close as possible to a corner of the equipment pad, protected by rigid conduit bonded to the grounding conductors, or terminated in a flush grounding plate.

Exposed grounding conductors shall be supported by noncorrosive metallic hardware at 4-foot intervals or less. Grounding conductors for shown and future equipment shall be terminated using a equipment grounding plate.

Ground conductors entering electrical enclosures shall be bonded to a single ground bus or terminal strip in the enclosure and to metallic raceways within or terminating at the enclosure. Direct ground connections to enclosure chassis or back plate are not acceptable. Prior to making ground connections or bonds, the metal surface at the point of connection shall be cleaned.

Lightning arresters shall be directly connected to the ground grid system using lightning industry braided copper conductors, sized as specified.

Metallic sheaths or shields of shielded power cable shall be terminated by a copper ground bus provided with cable connection for connection to the grounding system.

3.02 RACEWAY GROUND

All service, feeder, branch and control circuit raceways shall contain a green insulated ground conductor sized per applicable NFPA 70 National Electrical Code (NEC) tables:

1. T250.66 - Grounding Electrode Conductor for Alternating-Current Systems or

2. T250.122 - Minimum Size Equipment Grounding Conductors for Grounding Raceways and Equipment.

Metallic conduits terminating at concentric knock-outs or reducing washers shall be bonded using insulated grounding bushings. Grounding bushings shall be connected to the grounding system using conductors sized in compliance with NEC.

Cable trays shall have 2/0 or 4/0 bare copper ground conductor run on the outside of each tray or tray group of tiered cable tray. Conductor shall be connected to each section or fitting using an approved ground-clamp and supported at 5 foot intervals.

3.03 EQUIPMENT AND ENCLOSURE BONDING

Electrical distribution and utilization equipment enclosure ground bus, motor frames, manholes, metal structures and buildings, outdoor metal enclosures, fences and gates shall be bonded to the grounding system with conductor sizes as specified.

Connect the conductor to the metal enclosure using a UL listed connector, where the enclosure does not contain an internal ground bus

Non-electrical equipment with metallic enclosures, that are located outdoor and without a cover or a shade, shall be connected to the grounding system.

Chemical tanks provided with grounding lugs (typical) shall be bonded to the facility ground.

Metal framing for grating both indoors and outdoors, stairs and platforms shall be bonded to the facility ground.

3.04 ISOLATED GROUNDING

An isolated ground system shall be installed where required by an equipment manufacturer. The isolated ground conductor shall have green insulation with a yellow stripe and shall be run in the same raceway as the power and neutral conductors. The isolated ground bus shall be kept isolated from neutral and grounding buses.

Where specifically directed by the Engineer and required by an equipment manufacturer, the Contractor shall provide an additional isolated ground conductor from the service or separately derived system to an isolated ground bus bar at each associated distribution point.

3.05 SERVICE AND SEPARATELY DERIVED SYSTEM BONDING

A neutral bonding jumper shall be installed in only one location for each service or separately derived system. The bonding jumper shall be located at the service source or the first immediate distribution point downstream from the source. The neutral and ground buses shall be kept isolated from each other accept where the bonding jumper is installed.

3.06 GROUNDING SYSTEM TESTS

The Contractor shall test the facility grounding system and the building grounding system to determine the ground resistance. The grounding test shall be IEEE Standard 81 using the NETA Fall-of-Potential procedure. A plot of ground resistance readings for each isolated ground rod, ground mat, or ground bus shall be submitted on 8-1/2 x 11 inch size graph paper. Point-to-point resistance measurements are not acceptable.

The current reference rod shall be driven at least 100 feet from the ground rod or grid under test or as recommended by IEEE Standard 81. The measurements shall be made at 10-foot intervals beginning 25 feet from the test electrode and ending 75 feet from it, in direct line between the ground rod or center of grid and the current reference electrode.

A grounding system that shows greater than 2 ohm resistance for the flat portion of the plotted data shall be considered inadequately grounded.

The Contractor shall add additional parallel connected ground rods and/or deeper driven rods until the ground resistance measurements meet the 2 ohm requirement. Additional ground rods will be paid for as extra work where the required numbers exceed that specified when authorized and approved by the Engineer.

Use of salts, water, or compounds to attain the specified ground resistance is not acceptable.

END OF SECTION

SECTION 16460

DRY-TYPE TRANSFORMERS
(600 VOLTS AND LESS)

PART 1--GENERAL

1.01 DESCRIPTION

This section specifies dry-type transformers with primary winding rated 600 volts and less used for power distribution, lighting and control purposes as specified or shown.

This section specifies mini-power centers that include the primary transformer protection, transformer, secondary protection and a circuit breaker panel in one package.

This section specifies K-Rated transformer with electro-magnetic shielding.

1.02 REFERENCES

This section contains references to the following documents. They are a part of this section as specified and modified. Where a referenced document contains references to other standards, those documents are included as references under this section as if referenced directly. In the event of conflict between the requirements of this section and those of the listed documents, the requirements of this section shall prevail.

Unless otherwise specified, references to documents shall mean the documents in effect at the time of Advertisement for Bids or Invitation to Bid (or on the effective date of the Agreement if there were no Bids). If referenced documents have been discontinued by the issuing organization, references to those documents shall mean the replacement documents issued or otherwise identified by that organization or, if there are no replacement documents, the last version of the document before it was discontinued. Where document dates are given in the following listing, references to those documents shall mean the specific document version associated with that date, regardless of whether the document has been superseded by a version with a later date, discontinued or replaced.

Reference	Title
ANSI/IEEE C57.12.01	General Requirements for Dry-Type Distribution and Power Transformers
ANSI/UL 506	Specialty Transformers
NEMA ST20	Dry-Type Transformers for General Application

1.03 RATINGS AND STANDARDS

Transformers rated:

1. 10 kVA and smaller shall be single phase or as indicated.
2. 15 kVA and greater shall be 3 phase or as indicated.
3. Voltage, frequency, number of phases and kVA as indicated.
4. Conform to ANSI/IEEE C57.12.01 and ANSI/ UL 506.

PART 2--PRODUCTS

2.01 MANUFACTURERS

The Owner and Engineer believe the following candidate manufacturers are capable of producing equipment and/or products that will satisfy the requirements of this Section. This statement, however, shall not be construed as an endorsement of a particular manufacturer's products, nor shall it be construed that named manufacturers' standard equipment or products will comply with the requirements of this Section. Candidate manufacturers include:

1. Eaton
2. Square D
3. General Electric
4. Siemens
5. ABB
6. or equal.

2.02 INSULATION

Transformers temperature rise based on 40-degree C ambient temperature:

1. 15 kVA and above: Not exceed 80 degree C temperature rise.
2. below 15 kVA: Not exceed 80 degree C temperature rise.

2.03 COILS

Transformer coils:

1. Copper.
2. 15 kVA and above: impregnated with varnish.
3. 10 kVA and below: encapsulated.

2.04 WINDING CONFIGURATION

Transformers shall have electrically isolated primary and secondary windings. Primary

and secondary winding configurations shall be as specified or shown. Provisions shall be made to permit separate grounding of the neutral conductor and the enclosure. Single-phase transformers shall be the four winding type.

2.05 TRANSFORMER TAPS

Transformers 15 kVA and above shall be provided with two 2-1/2 percent full capacity taps above normal voltage and four 2-1/2 percent full capacity taps below rated voltage on the primary winding.

2.06 TERMINAL COMPARTMENTS

Terminal compartments shall be sized to permit termination of cables specified. Terminal connections shall be made in the bottom third of the enclosure. The terminals shall be copper and sized for the cable specified.

2.07 ENCLOSURES

Transformers enclosures:

1. 15 kVA and smaller: weatherproof, nonventilated enclosures.
2. Indoor over 15 kVA: dripproof, ventilated enclosures.
3. Outdoor: weatherproof enclosures.

2.08 MOUNTING

Transformers 25 kVA and below shall be suitable for wall mounting and include mounting brackets and hardware. Transformers over 25 kVA shall be floor mounting type.

2.09 NAMEPLATES

Nameplates shall be provided in accordance with the requirements of paragraph 16000-2.04.

2.10 SOUND LEVELS

The sound levels shall not exceed the following values:

kVA	dB
0-9	40
10-45	42
50-450	45
225-300	50
500	54

2.11 MINI-POWER CENTERS – NOT USED

2.12 NON-LINEAR LOAD K-FACTOR RATED TRANSFORMER – NOT USED

2.13 SHIELDED ISOLATION TRANSFORMER – NOT USED

2.14 PRODUCT DATA

The following information shall be provided in accordance with Section 01300:

1. Manufacturer's verification that the unit has been built and tested in accordance with the specified ANSI standards.

2. Manufacturer's verification of the sound levels, if different from the specified NEMA ST20 standards.

3. Applicable operation and maintenance information as specified in Section 01730.

4. Manufacturer's product literature.

PART 3--EXECUTION

3.01 GENERAL

Bond transformer enclosures and neutrals together and connect to the ground grid.

3.02 INSTALLATION

Install transformers on walls or floors at locations shown on the Drawings. Install floor mounted transformers on raised concrete bases. Provide sufficient access and working space for ready and safe operation and maintenance.

Mount transformers so that vibrations are not transmitted to the structural parts of the building or to other equipment. Make connections to transformers with flexible conduit.

Adjust tap settings to provide proper voltage at panelboards.

Ground transformer in conformance with the National Electrical Code.

3.03 TESTING

Transformers shall be tested in accordance with Section 16030 – Electrical Acceptance Testing.

**END OF SECTION*

SECTION 16470

LIGHTING AND POWER DISTRIBUTION PANELBOARDS

PART 1--GENERAL

1.01 DESCRIPTION

Three phase, four wire 208Y/120 or 480Y/277 volt, dead front, circuit breaker type panelboard with current rating of 600-amperes or less.

Single phase, three wire 120/240 volt, dead front, circuit breaker type panelboards with current rating of 400-amperes or less.

Provide metal oxide varistor (MOV) surge protective device (SPD) integral within each panelboard that indicates the status and condition of the SPD, tested per NEMA LS-1, rated IEEE C3 Combined Wave of 20kV and 10kA with 200kAIC internal fusing and listed / labeled per UL 1449.

1.02 REFERENCES

This section contains references to the following documents. They are a part of this section as specified and modified. Where a referenced document contains references to other standards, those documents are included as references under this section as if referenced directly. In the event of conflict between the requirements of this section and those of the listed documents, the requirements of this section shall prevail.

Unless otherwise specified, references to documents shall mean the documents in effect at the time of Advertisement for Bids or Invitation to Bid (or on the effective date of the Agreement if there were no Bids). If referenced documents have been discontinued by the issuing organization, references to those documents shall mean the replacement documents issued or otherwise identified by that organization or, if there are no replacement documents, the last version of the document before it was discontinued. Where document dates are given in the following listing, references to those documents shall mean the specific document version associated with that date, regardless of whether the document has been superseded by a version with a later date, discontinued or replaced.

Reference	Title
IEEE	Institute of Electrical and Electronic Engineers
NEMA	National Electrical Manufacturing Association
NFPA 70	National Electrical Code (NEC)
UL 50	Cabinets and Boxes
UL 67	Underwriters Laboratories, Electric Panelboards
UL 489	Molded-Case Circuit Breakers and Circuit Breaker Enclosures
UL 1449	Surge Suppression Devices

PART 2--PRODUCTS

2.01 MANUFACTURERS

The Owner and Engineer believe the following candidate manufacturers are capable of producing equipment and/or products that will satisfy the requirements of this Section. This statement, however, shall not be construed as an endorsement of a particular manufacturer's products, nor shall it be construed that named manufacturers' standard equipment or products will comply with the requirements of this Section. Candidate manufacturers include:

1. Eaton / Cutler-Hammer: PRL1a and PRL3a Clipper Power Visor Surge Protective Device series

2. General Electric: AQ and AD with internal Surge Protective Devices

3. Siemens: S1, SE, and S3 with internal Surge Protective Devices

4. Square D: NQOD and NF with internal Surge Protective Devices

5. or equal

2.02 ARRANGEMENT AND CONSTRUCTION

The front of the panel shall have concealed trim clamps and hinges. The locks shall be flush with cylinder tumbler-type with spring loaded door pulls. The fronts shall not be removable with doors in the locked position. Panelboard locks shall be keyed alike.

Gutter space shall be provided on all sides of the breaker assembly to neatly connect and arrange incoming wiring.

Panelboard shall be composed of individually mounted circuit breakers designed to be removable without disturbing other breakers.

A directory holder with clear plastic plate and metal frame shall be mounted on the inside of the door.

2.03 BUS

Bus shall be tin-plated copper and shall have current ratings as shown on the panelboard schedules, sized in accordance with UL 67. Ratings shall be determined by temperature rise test.

The minimum bus size shall be 100 amperes. Panel fault withstand rating shall be not less than the interrupting rating of the smallest circuit breaker in the panel. Series rating is prohibited.

Panelboards shall be provided with a separate ground bus and, where specified, with a full capacity neutral bus. The neutral bus shall be mounted on insulated stand-offs.

2.04 CIRCUIT BREAKERS

Circuit breakers shall be molded-case type provided for the current ratings and pole configurations specified on the panelboard schedule. Circuit breakers shall be bolt-on type. Circuit breakers shall be listed in accordance with UL 489 for the service specified. Load terminals of circuit breakers shall be solderless connectors.

Circuit breakers rated 120/208 volt and 120/240 volt alternating current shall have a minimum interrupting current rating of 18,000 amperes symmetrical at 240 volt AC or as specified on the panelboard schedule.

Circuit breakers rated 277/480 volt alternating current shall have a minimum interrupting current rating of 25,000 amperes symmetrical at 480 volt or as specified on the panelboard schedule.

Provide circuit breakers with special features such as ground fault interrupting (GFI), heating air conditioning and refrigeration (HACR) rating, or locking capability as shown on the Drawings or Schedules, or as required by these specifications.

Provide a minimum of 10% spare circuit space in all panelboards.

2.05 FINISH

Panelboard cabinet shall be fabricated from hot-dip galvanized steel in accordance with UL 50. Panelboard fronts shall have a gray, baked enamel finish.

2.06 NAMEPLATES

Nameplates shall be provided in accordance with the requirements of Section 16000.

2.07 PRODUCT DATA

The following information shall be provided in accordance with Section 01300:

1. Manufacturer's certification that bus bracing is capable of withstanding the specified short circuit condition.

2. Operation and maintenance information as specified in Section 01730.

3. Quantity and rating of circuit breakers provided with each panelboard.

PART 3--EXECUTION

3.01 GENERAL

The Contractor shall type in the circuit description on the circuit directory as shown on the final record drawings or panelboard schedule.

Provide “Circuit Directory and Circuit Identification” in accordance with NEC 408.4. Each circuit shall be of sufficient detail to allow each circuit to be distinguished from other circuits. Circuit identification shall include load location and provide equipment or instrument Tag Number and Tag Description, where shown on the drawings.

3.02 TESTING

Panelboards shall be tested for proper operation and function.

END OF SECTION

SECTION 16500

LUMINAIRES

PART 1--GENERAL

1.01 DESCRIPTION

This section specifies luminaires (lighting fixtures) features and installation.

1.02 REFERENCES

This section contains references to the following documents. They are a part of this section as specified and modified. Where a referenced document contains references to other standards, those documents are included as references under this section as if referenced directly. In the event of conflict between the requirements of this section and those of the listed documents, the requirements of this section shall prevail.

Unless otherwise specified, references to documents shall mean the documents in effect at the time of Advertisement for Bids or Invitation to Bid (or on the effective date of the Agreement if there were no Bids). If referenced documents have been discontinued by the issuing organization, references to those documents shall mean the replacement documents issued or otherwise identified by that organization or, if there are no replacement documents, the last version of the document before it was discontinued. Where document dates are given in the following listing, references to those documents shall mean the specific document version associated with that date, regardless of whether the document has been superseded by a version with a later date, discontinued or replaced.

Reference	Title
NFPA 70	National Electrical Code (NEC)

1.03 WARRANTY

A. EMERGENCY LIGHTING UNIT BATTERIES WARRANTY:

Manufacturer's standard form in which manufacturer of battery-powered emergency lighting unit agrees to repair or replace components of rechargeable batteries that fail in materials or workmanship within specified warranty period: Two years from date of Substantial Completion. Provide full warranty for first year and prorated warranty for the remaining warranty period.

B. FLUORESCENT BALLASTS WARRANTY:

Manufacturer's standard form in which ballast manufacturer agrees to repair or replace ballasts that fail in materials or workmanship within specified warranty period for Electronic or Electromagnetic Ballasts: Two years from date of Substantial Completion.

C. T5 AND T8 FLUORESCENT LAMPS WARRANTY:

Manufacturer's standard form, made out to Owner, and signed by lamp manufacturer agreeing to replace lamps that fail in materials or workmanship, f.o.b. the nearest shipping point to Project site, within specified warranty period: Two years from date of Substantial Completion.

1.04 EXTRA MATERIALS

Provide extra materials described below that match products installed and that are packaged with protective covering for storage and identified with labels describing contents. Provide at least one of each type.

1. Lamps: Ten for every 100 of each type and rating installed.

2. Plastic Diffusers and Lenses: One for every 100 of each type and rating installed.

3. Battery and Charger: One for every 10 emergency lighting units installed.

4. Ballasts: One for every 100 of each type and rating installed.

5. Globes and Guards: One for every 20 of each type and rating installed.

1.05 SUBMITTALS

Provide submittal information in accordance with Section 16000. Luminaire model numbers are provided on the drawings in the lighting schedule. The Contractor may propose an alternate luminaire for approval; however, sufficient information shall be provided as a part of the submittal for the Engineer and the Owner to review and compare the listed luminaire and the proposed alternate. Contractor and luminaire supplier shall provide a photometric, energy usage (efficiency), approvals/listings and materials comparison between the two fixtures. If an alternate luminaire layout is required the Contractor and luminaire supplier shall provide all illuminance calculations as part of the submittal to verify minimum illuminance levels are met by the proposed revisions. Proposed alternates shall be shown to be equivalent or superior to the luminaire listed. It shall be the Contractor’s responsibility to provide sufficient information to the Engineer and the Owner to verify and approve alternates.

PART 2--PRODUCTS

2.01 LIGHTING MATERIALS

Lighting materials, including luminaires, lamps, accessories, and hardware, shall conform to the detailed requirements specified. Lighting fixtures shall be provided where specified on the drawings.

2.02 INTERIOR LUMINAIRES AND COMPONENTS

1. Recessed Fixtures: Comply with NEMA LE 4 for ceiling compatibility.

2. Incandescent, Fluorescent and HID Fixtures: Comply with UL 1598.

3. Sheet Metal Components: Steel, unless otherwise indicated. Formed and supported to prevent warping and sagging.

4. Doors, Frames, and Other Internal Access: Smooth operating, free of light leakage under operating conditions, and designed to permit relamping without use of tools. Designed to prevent doors, frames, lenses, diffusers, and other components from falling accidentally during relamping and when secured in operating position.

5. Diffusers, Covers, and Globes:

a. Acrylic Lighting Diffusers and Other Products: Provide 100 percent virgin acrylic plastic with high resistance to yellowing and physical changes due to aging, exposure to heat and UV radiation.

1) Lens Thickness: At least 0.125 inch minimum.
2) UV stabilized.

b. Glass Lighting Diffusers and Other Products: Provide annealed crystal glass, unless otherwise indicated.

2.03 EXTERIOR LUMINAIRES

Complying with UL 1598 and listed for installation in wet locations.

A. SHEET METAL COMPONENTS:

Corrosion-resistant aluminum, unless otherwise indicated. Formed and supported to prevent warping and sagging.

B. HOUSINGS:

Housings shall not warp, sag, or deform in use and shall be rigidly formed, weather- and light-tight enclosures. Provide filter/breather for enclosed luminaires.

C. DOORS, FRAMES, AND INTERNAL ACCESS:

Smooth operating, free of light leakage under operating conditions, and designed to permit relamping without use of tools. Designed to prevent doors, frames, lenses, diffusers, and other components from falling accidentally during relamping and when secured in operating position. Removable doors for cleaning or replacing lenses. Designed to disconnect ballast when door opens.

D. EXPOSED HARDWARE MATERIAL:

Stainless steel.

E. PLASTIC PARTS:

High resistance to yellowing and physical changes due to aging, exposure to heat, and UV radiation.

F. LENSES AND REFRACTORS GASKETS:

Provide heat-resistant and aging-resistant resilient gaskets to seal and cushion lenses and refractors in luminary doors.

2.04 FLUORESCENT ELECTRONIC BALLASTS

Ballasts for F32T8 lamps shall be:

1. High frequency solid state electronic.
2. Instant start, parallel operation.
3. Minimum starting temperature: 50 degrees F.
4. Minimum 0.87 ballast factor.
5. Maximum total harmonic distortion (THD): 10%.
6. Power factor: 95% minimum.
7. Sound rated: A.
8. Ballast case temperature not to exceed 90 degrees Centigrade during normal operation in 30 degrees Centigrade ambient temperature.
9. Certified Ballast Manufacturers' Certification.

Built-in self-resetting thermal actuated device shall remove ballast from line when excessive ballast temperature is reached. UL Class P, CBM certified 100% output.

The conductors between ballasts and lamp holders shall have 1,000 volts insulation includes conductors to and from remote ballasts.

Provide ballasts with voltage characteristics to match that of the circuitry shown on the Drawings. No extra compensation will be allowed for failure to properly coordinate ballast voltage with circuitry.

Lamp current crest factor less than 1.7 and ballast factor over 0.85 for T8 lamps.

Ballasts shall comply with ANSI C62.41 – "Guide for Surge Voltages in Low-Voltage AC Power Circuits, Category A" for resistance to normal and common mode transient voltage surges. Comply with FCC Regulations Part 18 Class A for electromagnet interference.

Manufacturers: Advance, MagneTek, Motorola, or equal.

2.05 HIGH-INTENSITY-DISCHARGE LAMP BALLASTS

Comply with NEMA C82.4 and UL 1029. Shall include the following features, unless otherwise indicated.

1. Type: Constant-wattage autotransformer or regulating high-power-factor type.

2. Minimum Starting Temperature: Minus 22 degrees F (Minus 30 degrees C) for single-lamp ballasts.

3. Normal Ambient Operating Temperature: 104 degrees F (40 degrees C).

4. Open-circuit operation: Shall not reduce average life.

5. Ballast Fuses: One fuse in each ungrounded power supply conductor, size per manufacturer recommendations.

A. INSTANT-ON QUARTZ SYSTEM:

Automatically switches quartz lamp on when fixture is initially energized and when momentary power outages occur. Automatically turns quartz lamp off when high-intensity-discharge lamp reaches approximately 60 percent light output.

B. LOW-NOISE BALLASTS:

Epoxy-encapsulated models designed to minimize audible fixture noise.

C. HIGH-PRESSURE-SODIUM BALLASTS:

Solid-state igniter/starter with an average life in pulsing mode of 10,000 hours at an igniter/starter-case temperature of 90 degrees C.

D. METAL HALIDE BALLASTS:

Pulse start ballasts for lamps of 175 watt or for lamps with larger wattage with constant wattage auto transformer with a crest factor of 1.8 maximum. Provide regulated lag ballast with a crest factor or 1.5 with long life requirements.

2.06 EXIT SIGNS

Comply with UL 924 for sign colors and lettering size.

2.07 EMERGENCY LIGHTING UNITS

A. GENERAL:

Self-contained units complying with UL 924 with the following features:

1. Battery: Sealed, maintenance-free, with minimum 10-year nominal life.

2. Charger: Fully automatic, solid-state type with sealed transfer relay.

3. Wire Guard: Where specified or scheduled, heavy-chrome-plated wire guard.

4. Integral Time-Delay Relay: Holds unit on for fixed interval when power is restored after an outage; permits high-intensity-discharge lamps to restrike.

5. Operation: Turns lamp on when circuit voltage drops to 80 percent of nominal voltage. Lamp disconnects from battery when voltage approaches deep-discharge level. Disconnect lamps from battery, battery recharges, and floats on charger when normal voltage is restored.

2.08 EMERGENCY FLUORESCENT LIGHTING FIXTURES

A. INTERNAL TYPE:

Self-contained, modular, battery-inverter unit factory mounted within fixture body complying with UL 924 with the following features:

1. Emergency Connection: Operate one fluorescent lamp continuously. Connect unswitched circuit to battery-inverter unit and switched circuit to fixture ballast.

2. Night Light Connection: Operate one fluorescent lamp continuously.

3. Test Switch and Light-Emitting-Diode Indicator Light: Visible and accessible without opening fixture or entering ceiling space.

4. Battery: Sealed, maintenance-free, nickel-cadmium type with minimum seven-year nominal life.

5. Charger: Fully automatic, solid-state, constant-current type.

B. MANUFACTURERS:

Holophane, Lithonia, Bodine, Daybrite, Guth, Siltron, or equal.

2.09 LAMPS

A. GENERAL:

Lamps shall be as specified on the applicable Fixtures Schedule.

B. MANUFACTURERS:

Lamps shall be General Electric, North American Philips (Norelco), Sylvania, Venture Lighting International, or equal.

C. FLUORESCENT LAMPS:

1. T8 RAPID-START LAMPS: CRI of 75 minimum, color temperature of 3500 K, and average rated life of 20,000 hours, unless otherwise indicated.

2. COMPACT FLUORESCENT LAMPS: CRI 80 minimum, color temperature 3500 K, average rated life of 10,000 hours at 3 hours operation per start, unless otherwise indicated.

D. HIGH-INTENSITY-DISCHARGE (HID) LAMPS:

1. HIGH-PRESSURE-SODIUM LAMPS: NEMA C78.42, wattage and burning position as scheduled, CRI 65 minimum, color temperature 1900 K minimum and average rated life of 24,000 hours.

2. METAL-HALIDE LAMPS: ANSI C78.1372, Type-O, wattage and burning position as scheduled, CRI 70 minimum, and color temperature 4000 K minimum.

E. INCANDESCENT LAMPS:

Rated 130Vac, standard A or PS shape, and frosted inside.

2.10 EXTERIOR LIGHTING POLES

A. GENERAL:

Provide lighting poles with pole cap and the necessary fixture mounting hardware. Provide light switch and power outlet as shown on the drawings.

B. FIBERGLASS POLE:

Fiberglass pole finish shall be impregnated in the resin. Submit available colors for selection. Color shall selected and approved by Owner, Architect or Engineer from manufacturer’s standard finishes.

Manufacturer: Cem-Tec, W. J. Whatley, or equal.

C. CONCRETE POLE:

Concrete pole finish shall be natural mold concrete grey.

Manufacturer: Centrecon; Union Metal – Marbelite; or equal.

D. STEEL OR ALUMINUM POLES:

Provide tapered round, brown steel or aluminum poles. See schedule for requirements. Color shall selected and approved by Owner, Architect or Engineer from manufacturer's standard finishes.

2.11 SITE JUNCTION BOXES

Junction boxes for the distribution of outdoor lighting circuits shall be precast concrete and set flush with the ground. Nominal size shall be approximately 10.5 x 17.25 x 12 inches deep. Lid shall be cast iron with cast inscription: "LIGHTING".

Boxes manufacture: Brooks Products, Christy Concrete Products, Forni Corporation, Utility Vault Company or equal. Example: Brooks catalog No. 3-1/2PB.

2.12 FIXTURE FINISHES

1. Paint Finish: Applied over corrosion-resistant treatment or primer, free of defects.

2. Metallic Finish: Corrosion resistant.

3. Color shall be selected and approved by Owner, Architect or Engineer from manufacturer's standard finishes.

2.13 PHOTOELECTRIC RELAYS

A. PHOTO-CELLS:

1. Provide UL 773 or UL 773A listed units. Factory mount units to the luminaires.

2. Provide time-delay relays that fail in the on-position, factory set to turn light unit on at 1.5 to 3 foot candles (16 to 32 lux) and off at 4.5 to 10 foot candles (48 to 108 lux) with 15-second minimum time delay. Provide directional lens in front of photocell to prevent fixed light sources to cause turnoff.

3. Provide a cadmium sulfide cell housed in a plug receptacle assembly, three-prong, polarized, locking type. Provide assembly for outdoor mounting and rated for 1800 VA at 120V maximum capacity.

a. Relay with locking-type receptacle shall comply with NEMA C136.10.

b. Adjustable window slide for adjusting on-off set points.

2.14 PRODUCT DATA

The following information shall be provided in accordance with Section 01300:

1. Operation and maintenance items as specified in Section 01730.

2. Polar plots on 8-1/2 x 11 inch paper providing candlepower vs. angle and foot-lamberts (brightness) vs. angle for longitudinal and transverse axis.

3. Table of utilization factors for calculation of illumination levels by the zonal cavity method.

4. Catalog information describing fixture and lamp make, materials, and dimensions.

5. Manufacturers' warranties as specified in paragraph 16500-1.03.

6. Standard color selection chart.

PART 3--EXECUTION

3.01 GENERAL

The location and type of luminaires, associated poles, fixtures, and receptacles are as shown on the drawings.

Labels and marks, except the UL label, shall be removed from exposed parts of the fixtures. Fixtures shall be cleaned when the project is ready for acceptance. Photoelectric cells shall be oriented toward the north.

Raceways, wire, or cable shall be provided in accordance with Division 16. Raceways and wire shall be provided from the fixtures, switches and receptacles to the lighting panel in accordance with the NEC. Underground and outdoor wire splices shall be in accordance with Section 16120.

Fixtures labeled to require conductors with a temperature rating exceeding 75 degrees C shall be spliced to circuit conductors in a separately mounted junction box. Fixture wire shall meet UL and NEC requirements. Fixture shall be connected to junction box using flexible conduit with a temperature rating equal to that of the fixture.

Recessed fixtures shall be provided with mounting hardware for the ceiling system specified. A concealed latch and hinge mechanism shall be provided to permit access to the lamps and ballasts and for removal and replacement of the diffuser without removing the fixture

from ceiling panels. Fixtures recessed in concrete shall have protective coating of bituminous paint.

Fixtures shall be aligned and directed to illuminate an area as specified. Fixtures shall be directly and rigidly mounted on their supporting structures. The conduit system shall not be used to support fixtures.

Fixture supports that are welded to steel members shall be treated with rust-resistant primer and finish paint where brackets or supports for lighting fixtures.

Provide manufacturer recommended mounting hardware and brackets.

3.02 WIRE CONNECTIONS

Tighten electrical connectors and terminals according to manufacturer's published torque-tightening values or use torque values specified in UL 486A and UL 486B.

3.03 FIELD QUALITY CONTROL

Inspect each installed fixture for damage then replace damaged fixtures and components. Verify normal operation of each fixture after installation.

Test for Emergency Lighting: Interrupt power supply to demonstrate proper operation. Verify normal transfer to battery power source and retransfer to normal.

Prepare a written report of tests, inspections, observations, and verifications indicating and interpreting results. Retest to demonstrate compliance with specification requirements where adjustments are made. Replace fixtures with damage or corrosion during warranty period.

END OF SECTION

SECTION 16850

FIRE ALARM SYSTEM

PART 1--GENERAL

1.01 DESCRIPTION

A. SCOPE:

This section specifies the complete design, provision, supervision, and installation of a complete, operable, tested fire alarm system by a qualified firm specializing in fire alarm system design and installation. Work includes the design and installation of cable and raceway systems to support the fire alarm system monitoring, control, and alarm devices. Raceways systems shall be installed by the Electrical Contractor on the project and these systems shall be designed and constructed in accordance with Division 16 specifications.

The Master Fire Alarm Control Panel shall monitor the Facility and shall be connected to the Facility's SCADA monitoring and controls system. The FACP shall have the ability to be connected to outside monitoring facilities; including, the local fire department and/or remote County facilities.

It is expected that a single Master Fire Alarm Control Panel can monitor this facility; however, it is the responsibility of the Contractor and their selected qualified firm to assess the facility, applicable code requirements and requirements of the Authority Having Jurisdiction (AHJ) to determine the required equipment for the system.

B. EQUIPMENT LIST:

Tag No.	Equipment Description	Location
FACP-1000	Master Fire Alarm Control Panel	Treatment Building Data Room

1.02 QUALITY ASSURANCE

A REFERENCES:

This section contains references to the following documents. They are a part of this section as specified and modified. In case of conflict between the requirements of this section and those of the listed documents, the requirements of this section shall prevail.

Unless otherwise specified, references to documents shall mean the documents in effect at the time of Notice Inviting Bids. If referenced documents have been discontinued by the issuing organization, references to those documents shall mean the replacement documents issued or otherwise identified by that organization or, if there are no replacement documents,

the last version of the document before it was discontinued. Where document dates are given in the following listing, references to those documents shall mean the specific document version associated with that date, whether or not the document has been superseded by a version with a later date, discontinued or replaced.

Reference	Title
NFPA 70	National Electrical Code (NEC)
NFPA 72	National Fire Alarm Code
NFPA 101	Life Safety Code
NFPA 820	Fire Protection in Wastewater Treatment and Collection Facilities
UL 38	Standard for Safety Manually Activated Signaling Boxes
UL 464	Audible Signaling Appliances
UL 864	Control Units for Fire Protective Signaling Systems
UL 1424	Cables for Power-Limited Fire Alarm Circuits
UL 1971	Standard for Safety Visual Signaling Appliances

B. SHIPMENT, PROTECTION AND STORAGE:

Equipment shipment, protection and storage shall conform to the requirements specified in Section 01605.

C. WARRANTY:

In addition to the guarantee specified in the General Conditions,

The Contractor shall facilitate an extended system and product component warranty between the manufacturer and the Owner.

An extended component warranty shall be provided which warrants functionality of all components used in the system for 5 years from the date of acceptance. The warranty shall cover the components and labor associated with the repair or replacement of the system products within the warranty period. The cost of extended warranty shall be included in Contract bid price.

The Contractor shall staff each installation crew with the appropriate number of trained personnel, in accordance with the manufacturer’s warranty contract agreement, to support the extended warranty requirements.

After installation, testing and acceptance of the fire alarm system, the Contractor shall submit documentation to support the warranty in accordance with the manufacturer’s warranty requirements, and to apply for the warranty on behalf of the Owner.

D. REGULATORY APPROVALS:

The fire alarm control panel shall meet UL Standard 864 Control Units for Fire Protective Signaling Systems. The system shall have proper listing and/or approval from the following nationally recognized agencies:

1. UL Underwriters Laboratories Inc.
2. FM Factory Mutual

E. LOCAL FIRE MARSHALL APPROVAL:

The fire alarm system design and product submittal shall be reviewed and approved by the local fire department with their revisions to the fire alarm system submittal at no additional cost to the Owner. The fire department's approved submittal then shall be submitted as specified herein.

1.03 SUBMITTALS

The following submittals shall be provided in accordance with Sections 16000 and 01300 and shall include the following information:

1. A copy of this specification section, with addendum updates included, and all referenced and applicable sections, with addendum updates included, with each paragraph check-marked to indicate specification compliance or marked to indicate requested deviations from specification requirements. Check marks shall denote full compliance with a paragraph as a whole.

2. If deviations from the specifications are indicated, and therefore requested by the Contractor, each deviation shall be underlined and denoted by a number in the margin to the right of the identified paragraph, referenced to a detailed written explanation of the reasons for requesting the deviation.

3. The Engineer shall be the final authority for determining acceptability of requested deviations. The remaining portions of the paragraph not underlined will signify compliance on the part of the Contractor with the specifications.

4. Failure to include a copy of the marked-up specification sections, along with justification(s) for any requested deviations to the specification requirements, with the submittal shall be sufficient cause for rejection of the entire submittal with no further consideration.

5. Submit information on the following fire alarm system components:

   a. Fire Alarm Control Panels
   b. Local Alarm or Monitoring Devices
   c. Remote Alarm or Monitor Devices

d. Operator Interface Devices
e. Control and Signal Modules
f. Smoke, Fire, and Heat Detectors
g. Strobe, Horn, and Bells
h. Outdoor Rotating Light Beacon
i. Fire Alarm Pull Stations
j. Fire Alarm Cables
k. Guards & Accessories
l. Conduit and Junction Box plant location
l. Copper and Fiber Optic Cable and Network Modules.

6. Certification and verification approval that the proposed equipment is acceptable to the local fire department and its component parts are as listed and are approved by the Fire Marshall.

7. Engineering drawings including the following information:

   a. Type, size, rating, style, catalog number, manufacturers names, photos, and/or catalog data sheets for all items proposed to meet these specifications.

   b. Block diagram showing system relationships of major components and quantities and interconnecting cable requirements.

   c. Plans showing equipment locations, raceway, and conductor requirements.

   d. Control console and panel arrangements, equipment outlet devices, and special mounting details.

   e. Wiring diagrams showing terminal identification for field-installed wiring.

   f. Control logic, electrical schematic, and connection diagrams for the fire alarm system shall include all devices, (i.e., manual stations, bells, fire alarm panel, emergency power unit, remote station modules, zone distribution, and detector requirements).

8. Name, address, and telephone number of fire alarm system supplier.

9. Voltage drop calculations.

10. Field testing procedures and requirements.

PART 2--PRODUCTS

2.01 MANUFACTURERS AND ACCEPTABLE PRODUCTS

Fire alarm system supplier shall have sufficient products available and shall have an available service organization for a seven day a week for the warranted fire alarm system. Subject to compliance with the Contract Documents, the following manufacturers are acceptable: SimplexGrinnell, Edwards Systems Technology, Pyrotronics, Notifier or approved alternate.

2.02 SYSTEM DESCRIPTION

A complete fire protection and signaling system shall be designed and installed, including all associated equipment, devices, and controls necessary for proper operation as described herein and according to criteria of the AHJ(s) and NFPA. The Contractor shall design and install the system cable and raceway system to connect the devices to the panels and to interconnect the system panels.

The Fire Alarm System shall be a microprocessor-based network system with the fire alarm control panel assemblies, annunciators, and field devices designed and manufactured by the same company and tested for a fully functioning system.

The Fire Alarm System shall detect the electrical location of each intelligent fire alarm devices including the new and existing devices. System shall use the manufacturer's standard software for device map graphic display.

Equipment, materials, accessories, devices shall be provided by a single manufacturer. Equipment provided by different manufacturers shall be recognized as system compatible by both manufacturers, and “Listed” as such by Underwriters’ Laboratories.

Peripheral components as specified or as required shall be provided in sufficient number and located as needed to meet all applicable codes. The designer shall locate and provide spacing of notification appliances, initiating devices and select device enclosure types to meet the area type designations indicated on the drawings.

Coordination with other trades and their systems is required. The signaling system supplier shall coordinate with the fire suppression system supplier for monitoring of sprinkler system flow switches, anti-tampering switches, and other associated devices. The signaling system supplier shall coordinate the monitoring of ventilation system flow detection switches and with the instrument supplier for the monitoring of combustible gas detectors. This system shall be integrated with the Plant’s SCADA system and HVAC systems as generally shown on the drawings. Smoke detectors (SD) shown on the mechanical-HVAC do not dictate quantity or locations of device. These systems are to be designed as described herein.

The qualified firm shall provide a complete system design wiring diagrams, interface wiring diagrams, plan drawings with locations of all devices, and operational details.

System shall allow authorized service personnel using a program/service tool or laptop computer to change the function of intelligent fire alarm devices to meet changes in building

layout or environment. System changes by the manufacturer's representative shall be documented and Record Asbuilt drawings and software certification submitted upon completion.

2.03 FIRE ALARM SYSTEM COMPONENTS

A. FIRE ALARM CONTROL PANEL:

The Fire Alarm Control Panel (FACP) system shall include peer-to-peer networking utilizing fiber-optic cable or copper cable data communication link.

The fire alarm system control panels shall be wall mounted or floor mounted containing a card rack for fire zone module, signal circuit modules, power and control modules, remote station modules, transformer, power supplies and system backup batteries. The control panel power service shall be 120 Vac, single-phase, 3-wire plus ground circuits. The control panel cabinet shall conform to UL 864 and the requirements specified herein.

The fire alarm system control panel and batteries shall be mounted in a steel constructed cabinet with a locked door. Provide a viewing glass to view the fire zones and monitor the panel functions.

The batteries shall be the non-hydrogen off-gassing type, rechargeable, and capable of operating the fire alarm control panel for 24 hours without normal power. The batteries shall be provided with a battery charger. Transfer of power to battery back up system shall be automatic during both power-off and power-restore conditions.

The fire alarm circuits shall be electrically supervised with trouble alarm signal to indicate an open device contact or a ground fault that may prevent proper alarm operation. The control and signal modules shall interface between field-located devices and detectors.

The power supply shall furnish power for panel device and field devices such as fire, heat, or smoke heat detectors, pull stations, standpipe tamper and open-valves alarm devices, horns, strobes, and beacons. Provide power supply modules with 24 Vdc regulated power output with overcurrent protection and status indicators.

For indoor locations enclosure shall be for surface mount, metal cabinet with glass door with red baked enamel finish. Size the cabinets to receive the circuit conduit required.

For outdoor locations, provide NEMA-4, 316 stainless steel cabinets for installation of the monitoring, control, and alarm devices as part of the fire alarm system. Size the cabinets to receive the circuit conduit required. Mount the cabinets on stands fabricated from 316 stainless steel products, as shown in the stand installation details.

B. ZONE ALARM AND SYSTEM TROUBLE MONITORS:

Each system fire alarm control panel shall include local control and display monitors with integral membrane style, tactile push-button control switches, or equal, for system functions, status and alarm light emitting diodes (LED) with programmable flash rates, and slide-in labels for alarm of system events. The local control display monitors shall provide the system with

individual alarm and trouble alarm per zone and include a zone or device disable function or switch.

C. REMOTE MONITORS:

The remote control display monitors shall provide the system with individual alarm and trouble alarm per zone and/or device with zone and/or device disable.

D. OPERATOR INTERFACE:

Operator interface shall be by an LCD display that shall indicate alarms, supervisory service conditions and any trouble or alarms. Keyboards or keypads shall not be required to operate the system during alarm conditions. All necessary switches, relays, indicator lamps, wiring terminals, etc. shall be provided for complete operation supervising, control and testing facilities for the entire system.

FPCP shall allow for loading or editing special instructions and operating sequences as required. The system shall be capable of on-site programming to accommodate and facilitate expansion building parameter changes or changes as required by local codes. All software operations shall be stored in a non-volatile programmable memory within FPCP.

The system shall have provisions for disabling and enabling all circuits individually for maintenance and testing purposes.

The system shall be capable of logging and storing events in an alarm log and a trouble log. Events shall be stored in a battery protected random access memory. Each recorded event shall include time and date of that event's occurrence. The system shall have the capability of recalling alarms, trouble conditions, acknowledgments, silencing and reset activities in chronological order for the purpose of recreating an event history.

E. CONTROL AND SIGNAL MODULES:

Control module shall provide alarm resound and upon an alarm condition, a zone will report its status to the control module and cause the alarm LED on the zone to flash and cause the sounding of audible alarms and the operation of the output control relays for intake/exhaust fan, heating ventilation air conditioning (HVAC) duct-smoke detectors, wet fire alarm for flow and tamper switches, and other interface devices monitoring.

Single-pole double-throw, un-powered contacts are required for fan and HVAC interlocks. The Contractor shall connect the contacts to the fan and HVAC equipment controls. Fire alarm Contractor shall furnish pole relays for this purpose.

Signal circuit modules shall supply 2 amperes of signal capacity of DC power. Signal modules shall provide line and shorted line supervision and provide two signal circuits with two individual amber trouble lights with protective fuses visible and accessible on the front of the module. Programmed alarm input may be used for a non-coded system. Signal module shall be the 2-wire parallel circuit type.

The zone alarm LED will cease to flash and remain illuminated; the alarm devices will be silenced when the Acknowledge switch is depressed. Activation of another zone shall repeat the process.

The control module shall include a system reset, alarm lock-in, alarm resound, acknowledge switch, alarm LED, system trouble LED, supervised annunciator outputs for trouble with an annunciator trouble LED, high pitch sound devices, and LED test. Current monitoring meters shall indicate the supervising current for the entire system.

Provide zones or loops with Class B monitoring with non shielded, non twisted wire. Signal Modules shall be addressable devices and supervised Class B signal to their respective inputs at 24 Vdc and suited for #12 to #18 AWG wire size. T-taps wire branches are prohibited.

Control Relay Module shall provide one form “C” dry relay contact rated at 2 amperes at 24 Vdc to control external appliances or equipment shutdown rated for pilot duty and releasing systems. The control relay module shall be suitable for mounting on 2-½-inch deep 1-gang boxes and 1-½-inch deep 4-inch square boxes with 1-gang covers.

F. DETECTION AND SIGNAL DEVICES:

System intelligent detectors shall provide data communications using both broadcast and polling protocol. Detectors shall perform independent fire detection algorithms to measure sensor signal dimensions, time patterns and combine different fire parameters to increase reliability and distinguish real fire conditions from unwanted deceptive nuisance alarms. Eliminate signal patterns not typical of fires by filters. Devices not capable of combining different fire parameters or employing digital signal filters are unacceptable.

Provided detectors with integral microprocessor for alarm decisions based on fire parameter information and stored in the detector head. Provide data flow monitoring between detector and Analog loop controller. Maximum total analog loop response time for detectors that change state shall be 0.5 seconds. Detectors not capable of making independent alarm decisions are unacceptable.

Detectors shall display communication and alarm status. For example: A green LED shall flash to confirm communication with the Analog loop controller. A red LED shall flash to display alarm status. Both LEDs on steady shall indicate alarm-standalone mode status. Both LEDs shall be visible through a full 360 degree viewing angle.

Detectors shall identify up to 32 diagnostic codes available for system maintenance and stored at the detector and transmit pre-alarm and alarm signals in addition to the normal, trouble and cleaning needed alarm information and program smoke detectors for sensitivity settings.

Detector environmental compensation algorithms shall continually monitor the environmental impact of temperature, humidity, other contaminates and detector aging. Detector shall adjust to both 24 hour long term and 4 hour short term environmental changes.

Analog detectors shall continue to operate using sensitivity and environmental compensation information stored in its microprocessor at the time of communications failure. The analog loop controller shall monitor the loop and activate a loop alarm if any detector

reaches its alarm sensitivity threshold. Provide devices with automatic electronic addressing or with custom addressing, and both DIP switches or rotary switches are unacceptable.

1. HEAT DETECTORS: The intelligent combination fixed temperature/rate-of-rise heat detectors provided with low-mass thermistor heat sensor for fixed temperature and for a temperature rate-of-rise of the air, to minimize thermal lag time to process an alarm. Systems using central intelligence for alarm decisions shall not be acceptable.

The heat detector shall have a nominal fixed temperature alarm point rating of 135-degree F (57ºC) and a rate-of-rise alarm point of 15ºF (9ºC) per minute and be suitable for ceiling installation at a minimum of 70 ft (21.3m) centers and be suitable for wall mount applications.

2. SMOKE DETECTORS: Multi-sensor and intelligent addressable type. The smoke detector heads shall detect visible and invisible products of combustion. The smoke detector shall consist of three sensor technologies: ionization, photoelectric, and heat with an integral microprocessor to analyze and process the information obtained from each sensor and adapt to environmental changes, identify a dirty or defective detector, update an historic log, and transmit detector location for automatic device mapping.

3. DUCT SMOKE DETECTOR: Provide Air Duct Smoke Detectors to detect visible and invisible products of combustion with a measuring chamber and a protected reference chamber sensitive to changes in temperature and humidity and protect the measuring chamber from damage and insects. Provide a built-in five second delay to minimize alarms due to transient smoke

Variations in duct air velocity between 400 and 4,000 FPM (2 and 20.3 m/sec.) shall not cause any false alarms. Safeguard radioactive parts and protect circuitry against electrical transients, electromagnetic interference, and polarity reversal. Factory set the detector sensitivity. Mount the detectors head in an enclosure suitable for mounting to an air duct. Provide an air sampling tube that extends into the duct air stream.

Provide smoke detector duct housing assemblies to facilitate mounting an intelligent analog photoelectric detector and a standard relay or isolator detector mounting base. Provide for variations in duct air velocity between 300 and 4000 feet per minute (300 to 1000 feet per minute for ion-photo-heat detector).

Protect the measuring chamber from damage and insects. Provide an air exhaust tube and an air sampling inlet tube which extends into the duct air stream up to ten feet. Provide drilling templates and gaskets to facilitate locating and mounting the housing. Provide five one gang knockouts for mounting optional modules. Finish the housing in baked enamel.

4. STROBE AND HORN: Provide electronic horn/strobes with a red plastic housing with a steady tone sound output level of 100 dBA peak.

The strobe shall provide 15 cd, 30 cd, 60 cd, or 110 cd synchronized flash outputs as required by area coverage. The strobe shall have lens markings oriented for wall or ceiling mounting with lens markings and correctly oriented lettering. Removal of Horn/Strobe to change the lens markings is unacceptable.

Horns/Strobes shall mount in a 4-inch electrical box with extension ring using the two screws provided with ring with twist on mounting. Remove the screws to facilitate mounting is unacceptable.

5. STROBE: The strobe shall provide 15 cd, 15/75cd, 30 cd, 60 cd, or 110 cd synchronized flash outputs as required by area coverage. The strobe shall have lens markings oriented for wall or ceiling mounting with lens markings with correctly oriented lettering.

6. STROBE AND BELL: The bell shall be 6-inch in diameter with a protective guard with 83 dBA at 10 feet vibrating tone.

7. OUTDOOR ROTATING LIGHT: Provide outdoor rotating light for each building containing a fire alarm control panel and positioned suitable to the Fire Department to assist in the location of the fire alarm. The 24 Vdc beacon light shall be powered by the fire alarm control panel. The beacon light shall have a red lens suitable for outdoor mounting.

8. FIRE ALARM PULL STATIONS: Manual type, single-action break glass rod type, with recessed pull lever, positive action sealed switch, and double screw wiring terminals. Enclosure shall be cast metal, finished in fire alarm red, surface or semi-flush mounting as required. Fire alarm pull stations provided at all entrances / exits of the facility, and as required by local fire departments, whether indicated on the contract drawings or not.

Provide intelligent single action, single stage fire alarm pull stations. The pull station shall be of metal construction with an internal toggle switch with a locked test feature. Finish the pull station in red with silver “PULL IN CASE OF FIRE” lettering. The pull station shall be suitable for mounting on 2-½-inch deep 1-gang boxes and 1-½-inch deep 4-inch square boxes with 1-gang covers.

a. FIRE ALARM CABLES: Conductor insulation type shall be designed in accordance with NEC 760. The system designer shall verify wiring is sized to meet the NEC, equipment manufacturer’s requirements and voltage drop. One pair #16 AWG solid copper, vinyl or teflon insulated and an overall jacket with insulation individually color coded with jacket thickness per UL 1424. Cables shall be supplied and installed to interconnect the entire fire alarm system as specified herein and to meet local codes and requirements.

b. GUARDS & ACCESSORIES: Smoke detector guards shall be provided, except where located inside HVAC duct. Bell protective grid shall be provided for fire alarm bells.

c. FIRE ALARM SYSTEM COMPONENTS: UL listed and approved by the agencies specified herein.

2.03 RACEWAY AND JUNCTION BOXES

The raceway systems and pull boxes shall comply with Division 16 for area ratings specified without exception. Fire alarm system cable shall be enclosed in raceways. Provide steel flexible conduit for the cable laid in the cable tray. In cable tray systems, provide gray

PVC-coated galvanized rigid steel conduit to enter and exit the cable tray with three feet of rigid conduit in tray before transition to flex.

2.04 FIRE ALARM SYSTEM DATA COMMUNICATION NETWORK

Provide fiber optic communications interface card for the network link to the Main Fire Alarm Control Panel from the remote Fire Alarm Control Panels. The fiber optics interface module shall utilize 62.5/125 multimode fiber with ST connectors.

The fiber optic interface card shall provide a constant output test signal for maintenance and troubleshooting purposes. The fiber optic interface card shall provide Class B (Style 4) or Class A (Style 7) connections with provisions for backup power during maintenance.

2.05 PRODUCT DATA

The following information shall be provided in accordance with Section 01300:

1. Operating and maintenance information shall be provided as specified in Section 01730.

2. Test documentation shall be provided in a three-ring binder(s) clearly marked on the outside front cover and spine with the words “Test Results”, the project name, and the date of completion (month and year). Tests report printed on 8-1/2” x 11” paper shall include the problem and corrective action with both the failed and passed test data collected in the binder.

3. Installation certification Form 11000-A.

4. Training certification Form 11000-B.

5. Hourly Service Rates and Semi-Annual inspection prices for the installed Fire Alarm System performed by factory trained and authorized personal.

PART 3--EXECUTION

3.01 INSTALLATION

Devices and equipment shall be designed and installed in accordance with the requirements of the Contract Documents, NFPA 72A and 72B, and the manufacturer's recommendations. Refer to contract drawings that represent facility and building plans. Electrical devices, wiring, conduits, etc. shall meet the various electrical area classification and the National Electrical Code Article 500 hazardous classification area requirements as shown in the contract drawings.

Only fire alarm circuits shall be installed fire alarm conduits and raceways. Wiring splices shall not be permitted, except at device connections. Wiring shall be checked and tested

to ensure that there are no grounds, opens, or shorts. Transposing or changing color coding on wiring is unacceptable.

3.02 INSPECTION

A. MANUFACTURER SUPERVISION AND INSPECTION:

The Contractor shall have the manufacturer of the fire alarm system equipment provide the services of a qualified and factory authorized technical representative to supervise and instruct the Contractor in installation procedures. The representative shall supervise and inspect the fire alarm system during installation and supervise the performance of tests.

B. IN-PROGRESS INSPECTIONS:

Inspection shall be performed at the conclusion of cable pulling, prior to closing of ceilings or walls. Inspect the method of cable routing, support and the fire-stop used at wall, floor, or ceiling penetrations.

Inspection shall be performed at completion of cable termination to validate cables are terminated in accordance with TIA/EIA specifications, with minimum bend radius adhered to, and verify that cable ends are dressed neatly and orderly.

C. FINAL INSPECTION:

Final inspection of the fire alarm system shall validate that the system cables were installed and installation meets the NEC stated workmanship requirements.

3.03 PROGRAMMING

Request fire alarm system parameter review by Owner, prior to the programming of the fire alarm system parameters.

3.04 DOCUMENTATION

Provide fire alarm system Record As-built documentation to show additions and changes to the system during installation and to document the settings installed.

3.05 SYSTEM TESTING

A. PRELIMINARY OPERATIONAL TESTING:

Conduct operational tests of each equipment item or each equipment system for not less than 24 hours without interruption.

Furnish personnel, power, and necessary facilities for conducting the test operations. System components shall operate satisfactorily, under continuous full load for the duration of the test period. If any part of a unit shows evidence of unsatisfactory or improper operation during the test period, correction or repairs shall be made and the full operational test, as specified above, shall be repeated after all parts operate satisfactorily.

B. FINAL OPERATIONAL TESTING:

The Owner will test the system for seven days by operating either under actual or simulated conditions before fire alarm system final acceptance. Defects of material or workmanship that appear during this test period shall be corrected and the final test performed before final acceptance.

The Owner final test operation and final acceptance may be given on portions of the system. The Owner shall have the right to take possession of and use any completed portions of the work.

3.06 SYSTEM PERFORMANCE

Owner shall activate the fire alarm system components to validate operation of the fire alarm system.

3.07 FINAL ACCEPTANCE

Completion of the installation; in-progress and final inspections; receipt of the test and Record As-built documentation; and successful performance of the system for a 2-week period, after the 7-day test, shall constitute acceptance of the system.

END OF SECTION

SECTION 16920

600-VOLT MOTOR CONTROL CENTERS

PART 1--GENERAL

1.01 DESCRIPTION

A. SCOPE:

This section specifies freestanding, factory assembled 480 volt Motor Control Centers (MCC) with digital power monitors to display the voltage and current load parameters.

B. EQUIPMENT LIST:

MCCs specified herein and for this project shall be furnished by a single manufacturer. This includes MCCs to be provided as part of a “packaged” equipment system. Elementary control diagrams are provided only for equipment where its starters are located in the MCCs to be provided by the Electrical Contractor. Elementary control diagrams for packaged equipment are to be designed and provided by equipment supplier or systems integrator. However, packaged equipment suppliers are to follow the requirements of these specifications and the general intent of control diagrams shown, to provide similar systems as much as possible.

1.02 QUALITY ASSURANCE

A. REFERENCES:

This section contains references to the following documents. They are a part of this section as specified and modified. Where a referenced document contains references to other standards, those documents are included as references under this section as if referenced directly. In the event of conflict between the requirements of this section and those of the listed documents, the requirements of this section shall prevail.

Unless otherwise specified, references to documents shall mean the documents in effect at the time of Advertisement for Bids or Invitation to Bid (or on the effective date of the Agreement if there were no Bids). If referenced documents have been discontinued by the issuing organization, references to those documents shall mean the replacement documents issued or otherwise identified by that organization or, if there are no replacement documents, the last version of the document before it was discontinued. Where document dates are given in the following listing, references to those documents shall mean the specific document version associated with that date, regardless of whether the document has been superseded by a version with a later date, discontinued or replaced.

Reference	Title
ANSI/NEMA ICS 1	Industrial Control Systems: General Requirements
ANSI/NEMA ICS 18	Motor Control Centers
NFPA 79	Electrical Standards for Industrial Machinery

Reference	Title
UL 845	Motor Control Centers

B. CODES AND STANDARDS

Motor Control Centers and all components shall be Underwriters Laboratory listed to UL 845 and shall conform to NEMA ICS-1 and ICS-18 standards.

1.03 SUBMITTALS

The following information shall be provided in accordance with Section 01300:

1. A copy of this specification section, with addendum updates included, and all referenced and applicable sections, with addendum updates included, with each paragraph check-marked to indicate specification compliance or marked to indicate requested deviations from specification requirements. A check mark shall denote full compliance with a paragraph as a whole. If deviations from the specifications are indicated, and therefore requested by the Contractor, each deviation shall be underlined and denoted by a number in the margin to the right of the identified paragraph, referenced to a detailed written explanation of the reasons for requesting the deviation. The Engineer shall be the final authority for determining acceptability of requested deviations. The remaining portions of the paragraph not underlined will signify compliance on the part of the Contractor with the specifications. *Failure to include a copy of the marked-up specification sections, along with justification(s) for any requested deviations to the specification requirements, with the submittal shall be sufficient cause for rejection of the entire submittal with no further consideration.*

2. Elementary connection and interconnection diagrams as required in paragraph 16920-2.07, in accordance with NFPA 79 and/or NEMA ICS 18 Part 1 standards.

3. Time current curves for all protection devices.

4. List of starters and feeder tap compartments indicating the size and type of circuit protection.

5. Interrupting, withstand, and continuous current rating of:

   a. Bus bars
   b. Feeder tap units
   c. Starter units
   d. Main incoming units

6. Nameplate schedule

7. Dimensioned drawings showing conduit access locations

8. Front view elevation with starter and component schedule

PART 2--PRODUCTS

2.01 MANUFACTURERS

The Owner and Engineer believe the following candidate manufacturers are capable of producing equipment and/or products that will satisfy the requirements of this Section. This statement, however, shall not be construed as an endorsement of a particular manufacturer's products, nor shall it be construed that named manufacturers' standard equipment or products will comply with the requirements of this Section. Motor Control Centers shall be as manufactured by Eaton**,** Square-D**,** General Electric, Allen Bradley or approved equal.

2.02 SERVICE

Motor control centers shall be rated 480 volts, 60 Hertz, 3 phase, 3 wire as specified or indicated, suitable for operation at the specified voltages and short circuit capacities.

2.03 STRUCTURE AND CONSTRUCTION

A. STRUCTURE:

Motor control centers shall be made of No. 14 gage steel minimum and, unless otherwise shown, each section shall be 90 inches high by 20 inches wide by 20 inches deep. The individual unit compartments shall be a minimum of 12 inches high.

Each section shall have 72 inches for stacking starter units into the sections.

The compartments shall have pan-type doors with a minimum of two quarter-turn hold-down latches; and neoprene gaskets.

A full height vertical wireway, 4 inch wide minimum, but not less than 30 square inches in cross section, shall be provided for each vertical motor control center section. The wireway shall contain full height removable doors. Horizontal wireways shall be provided top and bottom, extending the length of motor control centers.

Bottom channel sills shall be mounted front and rear of the vertical sections extending the full length of the motor control center lineup. A removable lifting angle shall be mounted on top and shall extend the width of the motor control center lineup.

B. CONSTRUCTION:

Motor control centers located indoors shall have NEMA 1, gasketed enclosures.

Motor control centers located outdoors shall be NEMA 1 gasketed in a NEMA-3R weatherproof non-walk-in enclosure.

Starter units, size 4 and smaller, and feeder tap units less than 225 amperes shall be drawout plug-in construction with hardened, tin-plated copper free-floating stabs, steel spring backups. The door shall have interference tabs which prevent door closure if unit is improperly installed.

Units shall be latched in the position to assure proper bus contact. The unit disconnect device shall be interlocked to prevent removal or reinsertion of a unit when the disconnect is in the "ON" or "TRIPPED" positions.

Fusible switch or circuit breaker disconnect operators shall be capable of accommodating three padlocks for locking in the "OPEN" position.

Hardware for mounting future starter and feeder tap units shall be provided at compartments specified as "FUTURE."

C. SEISMIC BRACING:

Motor control centers and related equipment shall conform to the seismic anchorage and bracing requirements of Section 01900.

2.04 CONTROL SECTION

The control section (if required) shall be completely barriered and contain an equipment mounting panel made of 10-gage steel which is supported off the back of the enclosure by mounting studs. The usable depth shall be minimum 17 inches. Width shall be 36 inches, or as specified.

Slotted plastic wire ways shall be provided as required to contain the wiring in a neat appearance.

The control section shall include a 115 Vac utility power receptacle for maintenance and an internal switched fluorescent light and provide a separate 115 Vac branch circuit for the programmable controller as shown on the Drawings

2.05 FINISH AND COLOR

The finish and color shall be in accordance with Section 16000.

2.06 BUS

A. GENERAL:

Bus shall be tin-plated copper with bolted connections between vertical and horizontal bus bars. Access for tightening these connections shall be from the front, without the need for tools on the rear of the connection. Insulated horizontal and vertical bus barriers shall be provided. Barriers shall be fabricated from high-strength, glass-filled polyester resin.

The bus shall be braced to withstand a fault current of 65,000 amperes, RMS, symmetrical.

B. HORIZONTAL BUS:

Unless otherwise specified or shown, the main horizontal bus shall be rated a minimum 600 amperes continuous.

C. VERTICAL BUS:

Unless otherwise specified or shown, the vertical bus shall be insulated and rated a minimum 300 amperes continuous.

D. NEUTRAL BUS:

The neutral bus shall be provided and have the same rating as the main horizontal bus, where specified or shown.

E. GROUND BUS:

A 1/4-inch by 2-inch ground bus shall be provided the full length of the motor control center. Ground bus shall be located at the bottom of the motor control center. Provide a lug to terminate a bare 4/0 AWG copper ground conductors at each end of the ground bus.

2.07 WIRING

A. GENERAL:

Motor control centers shall be provided with NEMA ICS 18 Class II**,** Type B wiring. All starter units shall have terminal blocks for control wiring. Terminal blocks shall be provided for power wiring for starters size 2 and smaller.

Motor control centers shall be provided with all necessary interconnecting wiring and interlocking.

Provide elementary and connection diagrams for each starter unit and an interconnection diagram for the entire motor control center.

B. POWER WIRE:

Power wire shall be copper 90 degrees C insulated, sized to suit load; minimum power wire size shall be No. 12 AWG copper stranded.

C. CONTROL WIRE:

Control wire shall be No. 16 AWG stranded copper wire, rated 90 degrees C machine tool wiring (MTW) and UL listed for panel wiring.

D. TERMINATIONS AND CABLE CONNECTIONS:

1. TERMINALS: Control wiring shall be lugged with ring-tongue or locking spade crimp type terminals made from electrolytic copper, tin-plated.

2. CABLE CONNECTORS: Cable connectors for use with stranded copper wire, sizes No. 8 AWG to 1000 kC mil shall be UL listed. Dished conical washers shall be used for each bolted connection. Connectors shall be reusable and shall be rated for use with copper conductors. Incoming line and outgoing feeder compartments shall be provided with crimp type lugs, 3M Company, Burndy Company, or equal.

E. CONDUCTOR MARKERS:

Markers used for identification shall meet the requirements of Section 16000.

2.08 MAIN AND FEEDER CIRCUIT PROTECTION

A. GENERAL:

Main and feeder tap units shall consist of fused disconnect switches or circuit breakers, as specified or shown. Series ratings for overcurrent devices to meet specified short circuit withstand ratings is prohibited.

B. FUSED DISCONNECT SWITCHES – NOT USED

C. CIRCUIT BREAKERS (THERMAL MAGNETIC):

Thermal-magnetic circuit breakers shall be molded case equipped with toggle type handle, quick-make, quick-break over center switching mechanism that is trip-free so that breaker cannot be held closed against short circuits and abnormal currents. The tripped position shall be clearly indicated by breaker handle maintaining a position between "ON" and "OFF." All poles shall open, close, and trip simultaneously. Minimum short circuit capacity shall be 65,000 amperes symmetrical.

D. CIRCUIT BREAKERS (MAGNETIC ONLY) – NOT USED

2.09 MOTOR STARTER UNITS

A. GENERAL:

Motor starter units shall be combination type with contactor and fused disconnect switch, thermal magnetic circuit breaker, or motor circuit protector, and solid-state overload unit as indicated on the drawings or specified in the MCC schedule. The starter units shall have a minimum combination UL listing of 65,000 amperes RMS symmetrical or as indicated or specified in the schedule.

B. FUSED DISCONNECT SWITCHES – NOT USED

C. MOTOR CIRCUIT PROTECTORS:

The molded case motor circuit protector (MCP) shall operate on the magnetic principle with a current sensing coil in each of the three poles to provide an instantaneous trip for short circuit protection. The trip setting shall be adjustable from 700 to 1300 percent of the motor full load amperes from the front of the MCP. The motor circuit protector shall be set at its lowest position at the factory.

D. CONTROL TRANSFORMERS:

Each control transformer shall be rated 480/240-120V, single phase, 2-wires, 60 Hertz. The transformer shall be sized for the load it feeds but shall not be less than the minimum ratings as follows:

NEMA starter size	Minimum transformer volt-ampere rating
1	100
2	150
3	200
4	300

Each control transformer shall be provided with time-delay, slow-blow secondary fuse rated to interrupt 10,000 amperes short circuit at 250 volts AC. Two primary fuses rated to interrupt 200,000 amperes at 600 volts shall be provided on all starters.

Fuse holder for secondary fuse shall be drawout indicating type and mounted on the door of the compartment. Fuse holders for primary fuses shall be fuse clips with full barriers between fuses.

E. CONTACTORS:

Unless otherwise specified or shown, contactors shall be full voltage, 3-pole, 600 volt AC, NEMA Size-1 minimum. Contacts shall be double break, silver-cadmium oxide, and weld resistant. Contacts shall be isolated to prevent arcing. Coils and magnets shall be capable of being removed or replaced without special tools. IEC contactors are prohibited.

Reversing, multispeed, and reduced voltage starters shall have additional contactors, overload relays, and auxiliary relays as required, and shall have mechanically interlocked contactor coils to prevent simultaneous engagement.

F. TRANSIENT VOLTAGE SURGE SUPPRESSOR:

Provide metal oxide varistor (MOV) surge protective device (SPD) integral within each motor control center that indicates the status and condition of the SPD, with 200kAIC internal fusing and listed / labeled per UL 1449, 3rd Edition. Nominal discharge rating shall be 20kA. Minimum surge rating: 160kA per phase.

Provide a factory selected transient surge suppressor rated for each motor starter and power contactor encapsulated in a small module and mounted directly to the starter or contactor coil.

G. AUXILIARY CONTACTS:

Contactors shall be equipped with auxiliary contacts, rated 10 amperes at 120 volts AC. Refer to drawings for actual quantities required. As a minimum, each contactor shall be equipped with two normally open and two normally closed electrically isolated auxiliary contacts with the used and auxiliary contacts wired out to terminal blocks.

H. OVERLOAD RELAY:

The solid-state overload relay shall protect the power wiring and motor from excessive overcurrents. The relay shall be ambient compensated and have adjustment from 90 to 110 percent of the normal rating.

The sensing element shall be adjustable Class 20 tripping time of 20-seconds at 600-percent of current setting. The faster overload trip Class 10 (10-seconds at 600-percent of current setting) and the longer overload trip Class 30 (30-seconds at 600-percent of current setting) shall be field set by the installer during the driven equipment startup with the overload settings that are required by the type of motor driven load.

Provide motor protection relays as shown on the drawing schematics. Motor Protection relays shall be Eaton C441 or approved equal.

I. TERMINAL BLOCKS:

Terminal blocks shall be screw type rated 600 volts; 20 amperes for control wiring and 30 amperes power wiring with starters Size 3 and larger shall terminate the power leads directly to the contactor.

The number of terminal blocks shall be specified on the drawings. Terminal blocks shall be provided with integral marking strips and shall be permanently marked with the conductor number as specified on the drawings. Internal wiring shall be connected on one side of the terminal block; outgoing conductors shall be connected to the other side.

2.10 MISCELLANEOUS

A. GENERAL:

Control devices such as pushbuttons, selector switches, indicating lights and overload reset pushbuttons shall be mounted on the unit compartment door.

Starters and drives for submersible pump motors shall be furnished with circuitry to interface with the motor leak and temperature protection modules (such as the Flygt CAS module). Coordinate with pump supplier and obtain the pump/motor protection devices for mounting in the equipment structure as required. See the pump motor schematic diagram shown on the drawings for additional information.

The control devices shall comply with the requirements of Section 16175.

B. ELAPSED TIME INDICATOR:

Where shown or specified, the elapsed time indicator shall be as specified in Section 16175. The indicator shall be mounted on the unit compartment door.

C. NAMEPLATES:

Nameplates shall be provided in accordance with the requirements of Section 16000. Nameplates shall be provided for all cubicles and compartments and identify the load per NEC. A Nameplate shall be provided identifying the motor control center. Provide equipment tag numbers and descriptions as shown.

2.11 SPACE HEATERS AND THERMOSTATS

Motor control centers located outdoors or in a corrosion rated area shall be provided with space heaters and thermostats to maintain the interior temperature at more than 45 degrees F. Space heaters and thermostats shall be rated 120 volts AC. Space heater shall be powered from a control power transformer.

2.12 DRY-TYPE TRANSFORMERS

Dry-type non-linear energy efficient power transformers shall meet the requirements of Section 16460. The size and voltage shall be as specified.

2.13 PANELBOARDS

Where specified, panelboards mounted in motor control centers shall be flush mounted and shall have the quantity and size of branch circuit breakers specified. The panelboard shall meet the requirements of Section 16470 ampere breakers.

2.14 ADJUSTABLE FREQUENCY DRIVES

AFDs mounted in motor control centers shall be flush mounted and shall meet the following requirements.

1. AFD, ASD, VFD, VSD are interchangeable terms.

2. Provide variable or constant torque PWM type drives for motors as indicated on the Drawings. MCC-mounted AFDs shall not be applied for motors exceeding 75 horsepower. Include circuit breaker disconnecting means, 3-percent line reactors and cooling fans as required to dissipate the heat into the room.

3. Provide a motor output reactor to trim the reflected-wave voltage spike from reflected waves from the motor where indicated on the Drawings or as specified herein.

4. Provide ratings as indicated.

5. Provide microprocessor Operator Interface Station (OIS) on the AFD door.

6. EMI/RFI shielding as required for products and wiring. Provide dv/dt filter or load reactor for all motors 300 feet or more from the AFD. MTE RL reacotrs, 5% impedance open reactor or approved equal.

7. Provide current limiting fuses for short circuit protection if required to meet short circuit requirments of the MCC.

8. Provide factory technician for setup, startup services, and training.

9. Data communication: none; unless provided as part of a vendor package system.

10. Provide four Form-C relays with 5-ampere contacts for interlocks.

11. Provide four programmable relay outputs for on-off status, alarm, “Remote” mode.

12. Provide isolated 4-20madc analog input for speed control.

13. Provide isolated 4-20madc analog output for speed indication.

14. Provide individual line input harmonic filters, as required for harmonic mitigation with adaptive passive technology. Meet IEEE-519 for voltage and current harmonics with Point-of-Common-Coupling at the MCC bus. Individual line filters shall be MTE Matrix Series D or approved equal.

15. Provide forward and reverse indicators for VFDs to be used on equipment with reversing capabilities.

2.15 REDUCED VOLTAGE SOLID STATE STARTERS (RVSS)

RVSS mounted in motor control centers shall be flush mounted and shall meet the following requirements.

1. Provide ratings as indicated and circuit breaker.

2. Provide full-voltage operating contactor. Provide cooling fan and filter, as required.

3. Provide EMI/RFI shielding as required for products and wiring.

4. Provide current limiting fuses for short circuit protection, as required.

5. Provide factory technician for setup, startup services, and training.

6. Data communication: None.

7. Provide Form-C relays as required with 5-ampere contacts for interlocks.

8. Provide selectable kick start and adjustable ramp up and ramp down speeds.

9. Provide overload protection with selectable classes of 10, 15, 20, and 30 with three-phase current sensing, initially set for 20 and field adjusted as required for the application by the Factory Engineer.

10. Provide the following selectable protection:

    a. Under-load
    b. Under-voltage
    c. Over-load
    d. Over-voltage
    e. Voltage Unbalance
    f. Excessive Starts Per Hour
    g. Phase Reversal
    h. Stall and Jam

11. Provide microprocessor Operator Interface Station (OIS) on the SSS door and display as a minimum:

    a. Three-phase current
    b. Three-phase voltage
    c. Power in kW
    d. Power usage in kWh
    e. Power factor
    f. Elapsed time

12. Provide programmable relay outputs for:

    a. Fault alarm
    b. On-Off status
    c. Auto mode or Remote mode status
    d. Ready status
    e. Full-Speed-Bypass status

2.16 SPARE PARTS

One set consisting of the following spare parts shall be provided:

1--set each fuse size and type
10--indicating light bulbs

2.17 PRODUCT DATA

The following information shall be provided in accordance with Section 01300:

1. Manufacturer's certification that the following items are capable of interrupting and/or withstanding the specified short circuit condition:

    a. Bus bar bracing
    b. Feeder tap units
    c. Starter units

2. Operation and maintenance information as specified in Section 01730.

3. Dimensions and weights.

4. Installation instructions.

5. Manufacturer's product data.

6. Manufacturer's certification and calculations confirming that the equipment complies with the seismic anchorage and bracing requirements of Section 01900 and paragraph 16920-2.03 C.

7. Time current curves for all protection devices.

PART 3--EXECUTION

3.01 GENERAL

The motor control centers shall be erected in accordance with the recommendations of the manufacturer and with the details specified herein.

Field wiring shall meet the requirements of paragraph 16120-3.02. Cables larger than No. 6 AWG which hang from their vertical connections shall be supported within 2 feet of the connection.

The solid-state overload relay settings shall be implemented by the Contractor with the settings selected based on the actual full load amperes of the motor connected to the starter and the requirements of the motor driven equipment. Refer to the manufacturer’s literature for setting the overload relays. Refer to the overload relay paragraph 16920-2.09H for the setting options that available in the overload relay.

The motor circuit protectors shall be adjusted by the Contractor to the lowest setting not causing false tripping.

MCC’s to be installed outdoors or in areas with floor drains shall be installed on 3-1/2-inch concrete housekeeping pads per the manufacturer’s installation instruction. Install all MCC’s level and plumb.

Seismic anchorage shall be per Section 01900.

Contractor and MCC supplier shall reference plan view drawings and make note of available space and proposed layouts for MCCs. Available space for MCCs is as shown on the plans; therefore, MCC layouts should be designed to fit within the limits shown.

3.02 FIELD TESTS

Motor control centers shall be tested in accordance with Section 16030.

END OF SECTION

SECTION 17000

GENERAL REQUIREMENTS FOR INSTRUMENTATION AND CONTROL

PART 1--GENERAL

1.01 DESCRIPTION

A. SCOPE:

This section specifies general requirements which are applicable to providing a complete, functional process control, instrumentation, communication, and signal systems for the Little River Water Reclamation Facility. The requirements of this section are applicable to all work specified in Division 17 of these specifications.

Electrical requirements applicable to this work include those specified in Section 16000 for general electrical requirements; Section 16175 for electrical devices; and Section 16176 for control panels.

B. DESCRIPTION OF WORK:

1. GENERAL: The control system consists of a series of new PLC-based control panels, electrical monitoring modules, and operator interfaces communicating on a fault-tolerant fiber optic Ethernet network throughout the facility as shown on the Network Architecture diagram (00-I-008) and monitoring functions shall be as indicated on the drawings, as described, and as otherwise necessary for a complete and operating system.

The control system shall be based on a single ControlLogix based PLC in the Master Control Panel (LCP-2000). This PLC will perform the primary montioring and control of the plant control system. It will have redundant processors and a networked I/O racks. The SCADA software monitoring and control shall be based on GE Proficy HMI/SCADA iFIX software. The system will be monitored using a client/server system using thin client workstaitons in both office grade and industrial panel mount versions. Each thin client will be ACP ThinManager enabled, so that the units can be configured, monitored, and managed using ACP ThinManager software. The office grade thin clients will be located in the control room and offices. Additionally, there will be a number of industural touchscreen thin clients mounted on the front of LCP-2000 and throughout the plant. This configuration is shown on the network architecture drawing (00-I-008). The ThinManager software shall be configured so that an iPad or Android tablet device may be used to access the SCADA system through the ThinManager software. This will allow operations personnel to use the plant WIFI network to monitor and control the plant via the tablet device.

A major portion of the process will be provided by the Membrane System Supplier (MSS). This vendor will provide the Membrane Bioreactor Control Panel (VCP-5000). This system will control the MSS process as shown on the P&IDs. Their equipment is primarily in area 50 on the P&IDs. This control panel will include a touchscreen operator interface to monitor and control the membrane system. The MSS will supply a second operator interface to be turned over to the system integrator. This operator interface will be mounted in panel OIT-5000.

2. SCADA HARDWARE: Server and Workstation computers shall be furnished as described in Section 17317. All labor for configuring the computers, loading software, transportation to the site, and other labor associated with setting up, and troubleshooting the computers shall be performed under the lump sum portion of the bid. Specifications for the computers and associated peripherals will be transmitted to the Contractor during construction. System integrator shall review the computer specification for deviation from the HMI software manufacturer's computer requirements and inform the Engineer and Owner of alterations to be made in the computer requirements to be suitable for use with the HMI software and system architecture.

3. HUMAN MACHINE INTERFACE (HMI): The HMI computer and Operator Interface units shall display and control all I/O points and data points associated with the PLCs and digital equipment networked to the plant control system.

4. PROGRAMMING: Programming shall be provided per Section 17990.

C. DEFINITIONS:

1. GENERAL: Definitions of terminology related to Instrumentation and Industrial Electronic Systems used in the specifications shall be as defined in IEEE 100, ISA S51.1, and NEMA ICS 1.

2. TWO-WIRE TRANSMITTER: A transducer which derives operating power supply from the signal transmission circuit and requires no separate power supply connections. A two-wire transmitter produces a 4 to 20 milliampere current regulated signal in a series circuit with a 24 volt direct current driving potential and a maximum circuit resistance of 600 ohms.

3. FOUR-WIRE TRANSMITTER: A transducer which derives operating power from separate power supply connections. A four-wire transmitter produces a 4 to 20 milliampere current regulated signal in a series circuit with a maximum circuit resistance of 600 ohms. Four-wire transmitters typically require 120Vac or 24Vdc input power supply.

4. GALVANIC ISOLATION: Electrical node having no direct current path to another electrical node. Galvanic isolation refers to a device with electrical inputs and/or outputs which are isolated from ground, the device case, the process fluid, and separate power supply terminals. Inputs and/or outputs may be externally grounded without affecting the characteristics of the devices or providing path for circulation of ground currents.

5. PANEL: An instrument support system which may be a flat surface, a partial enclosure, or a complete enclosure for instruments and other devices used in process control systems including consoles, cabinets and racks. Panels provide mechanical protection, electrical isolation, and protection from dust, dirt, moisture, and chemical contaminants which may be present in the atmosphere.

6. DATA SHEETS: Data sheets shall refer to ISA S20 or ISA TR20.00.01.

7. SIGNAL TYPES: Used in systems specified in Division 17:

a. LOW-LEVEL ANALOG: Signal with full output level of 100 millivolts or less including thermocouples and resistance temperature detectors.

b. HIGH-LEVEL ANALOG: Signals with full output level greater than 100 millivolts but less than 30 volts, including 4 20 mA transmission.

c. DIGITAL CODE: Coded information from the output of an analog to digital converter or digital transmission terminal.

d. PULSE FREQUENCY: Counting pulses emitted from speed or flow transmitters.

e. MODULATED SIGNALS: Signals from modems or low level audio signals. Normal signal level: plus 4 dBm to minus 22 dBm. Frequency range is 300 to 10,000 Hertz.

f. DISCRETE CONTROL OR EVENTS: Dry contact closures and signals monitored by solid state equipment, relays, or control circuits.

g. LOW VOLTAGE DISCRETE CONTROL OR EVENTS: Dry contact closures and signals monitored by solid state equipment, relays, or control circuits operating at less than 30 volts and 250 milliamperes.

h. HIGH-LEVEL AUDIO SIGNALS: Audio signals exceeding plus 4 dBm, including loudspeaker circuits.

i. RADIO FREQUENCY SIGNALS: Continuous wave alternating current signals with fundamental frequency greater than 10 kilohertz.

8. SYSTEMS INTEGRATOR: A firm engaged in the business of detailed control system design and engineering, instrumentation component purchase, system and panel assembly, programming, and implementing the specified process control and industrial automation systems.

1.02 QUALITY ASSURANCE

A. REFERENCES:

This section contains references to the following documents. They are a part of this section as specified and modified. Where a referenced document contains references to other standards, those documents are included as references under this section as if referenced directly. In the event of conflict between the requirements of this section and those of the listed documents, the requirements of this section shall prevail.

Unless otherwise specified, references to documents shall mean the documents in effect at the time of Advertisement for Bids or Invitation to Bid (or on the effective date of the Agreement if there were no Bids).

If referenced documents have been discontinued by the issuing organization, references to those documents shall mean the replacement documents issued or otherwise identified by that organization or, if there are no replacement documents, the last version of the document before it was discontinued.

Where document dates are given in the following listing, references to those documents shall mean the specific document version associated with that date, regardless of whether the document has been superseded by a version with a later date, discontinued or replaced.

Reference	Title
IEEE 100	Standard Dictionary of Electrical and Electronics Terms
ISA S5.4	Instrument Loop Diagrams
ISA S20	Specification Forms For Process Measurement and Control Instrumentation, Primary Elements, and Control Valves
ISA S51.1	Process Instrumentation Terminology
ISA TR20.00.01	Specification Forms for Process Measurement and Control Instruments Part 1: General Considerations
NEMA ICS 1	General Standards for Industrial Control and Systems

B. SYSTEMS INTEGRATOR RESPONSIBILITY:

1. GENERAL:

a. The specified control system and instrumentation integration including panel building, instrument calibration, testing, start-up, operational testing, and training shall be performed by a Systems Integrator staffed with qualified personnel, possessing necessary equipment and experience in performing similar installations.

b. The control system components shall, as far as practical, be of one manufacturer.

c. The components, modules, devices, and control system equipment shall be recognized industrial quality products. Recognized commercial or office grade products are prohibited.

d. The overall system performance shall be demonstrated to and accepted by Owner.

e. The application software packages shall be latest versions available, or compatible with existing software currently in use, as specified in Section 17316.

2. SYSTEMS INTEGRATOR QUALIFICATIONS:

a. The following Systems Integrators are pre-qualified to perform the work specified in Division 17 without the need to provide Evidence of Experience:

1) Global Controls, Smyrna, GA
2) MR Systems, Norcross, GA
3) Transdyn, Duluth, GA
4) Revere Controls, Birmingham, AL

b. Contractor-proposed Systems Integrator shall be evaluated based on submittal of the following Evidence of Experience:

1) Submit evidence of experience in performing three similar successful projects in the last five years with one project currently in progress or competed within the last two years.

2) Submit project descriptions with contact names, addresses, and telephone numbers from the project Owner, General Contractor, and Principal Design Firm.

3). Submit organization chart and resumes for proposed project personnel.

4) Submit Training and Certification information. Completion of the following training courses or appropriate portions thereof or possession of the following certifications included with the Systems Integrator's personnel experience requirements described above:

a) Project manager: Control System Engineer (CSE) registration, Professional Engineer (PE) registration.

b) Systems engineer: Control System Engineer (CSE) registration, Professional Engineer (PE) registration, or completion of the relevant core courses in the Engineering Skills Training program.

c) Programmer: Control System Engineer (CSE) registration, Professional Engineer (PE) registration.

d) Field instrument technician: Certified Control Systems Technician (CCST) registration or completion of the relevant core courses in the Technical Skills Training program.

e) Certified training programs, as offered by ISA.

5) Submit financial data for Systems Integrator division when subsidiary to a parent corporation. Include two years of financial data.

a) Financial Statement.
b) Balance Sheet.
c) Dun & Bradstreet Report.

3. PRE-SUBMITTAL CONFERENCE:

a. Schedule a pre-submittal conference with the Owner and Engineer within 30 calendar days after Contract award to discuss the work, equipment, submittal format, and establish the framework for project coordination and communication.

b. Provide materials 10 days prior to the conference:

1) Instrument Index that lists the devices and instruments specified in Division 17 identify each by tag number, description, function, manufacturer, and model number.

2) Product descriptive literature with a statement that the item is as specified.

3) Proposed equal products with comparative listing of the published specifications for the specified item and the proposed item.

4) Project schedule with deliverables and milestones.

5) Project Control System Block Diagram, when specified.

6) Sample portion of documented PLC and Operator Interface program, when specified.

7) Sample Spec. 17110 control panel schematic diagram proposed for this project, when specified. Sample can be a copy from a previous project provided that it represents the format being proposed for this project.

8) Sample analog and discrete loop diagrams proposed for this project, when specified. Sample can be a copy from a previous project provided that it represents the format being proposed for this project.

9) A copy of this specification section, with addendum updates included, and all referenced and applicable

sections, with addendum updates included, with each paragraph check-marked to indicate specification compliance or marked to indicate requested deviations from specification requirements. A check mark shall denote full compliance with a paragraph as a whole. If deviations from the specifications are indicated, and therefore requested by the Contractor, each requested deviation shall be underlined and denoted by a number in the margin to the right of the identified paragraph, referenced to a detailed written explanation of the reasons for requesting the deviation. The Engineer shall be the final authority for determining acceptability of requested deviations. The remaining portions of the paragraph not underlined will signify compliance on the part of the Contractor with the specifications.

c. The pre-submittal conference will not replace the Product and Shop Drawing Submittal review process.

C. PROCESS EQUIPMENT COORDINATION:

1. Division 17 specified equipment shall be coordinated for proper operation with equipment related process equipment specified in other Divisions.

2. Equipment shall be integrated, furnished, and installed in conformance with the drawings, specifications, and the recommendations of the equipment manufacturer and the related processes equipment manufacturers.

3. Systems Integrator shall obtain manufacturer's technical information for items of equipment not provided with, but directly connected to, the control system. Provide the necessary coordination and components for correct signal interfaces between specified equipment and the control system.

4. Systems Integrator shall coordinate with project subcontractors and equipment suppliers.

5. Systems Integrator shall provide installation supervision for the duration of the project, a minimum of 24 man-weeks on-site.

6. Conflicts between the plans, specifications, manufacturer/vendor drawings and installation instructions, etc., shall be presented to the Engineer for resolution before proceeding.

D. FACTORY ACCEPTANCE TEST (FAT):

Refer to Section 17030.

1.03 ENVIRONMENTAL CONDITIONS

A. GENERAL:

Specified data communication and process control equipment shall suitable for operation in indoor locations and in outdoor locations. Ambient conditions are specified in Section 01800.

B. CORROSIVE LOCATIONS:

Corrosive locations shall be as specified in Division 16.

C. HAZARDOUS (CLASSIFIED) AREAS:

Hazardous areas shall be as specified in Division 16.

1.04 FUNCTIONAL REQUIREMENTS

A. GENERAL:

The instrumentation and control system functions are shown on the drawings and specified in subsequent sections of Division 17. The Systems Integrator drawings and integration practices shall be as defined in IEEE 100, ISA S51.1, and NEMA ICS 1.

B. SUBMITTAL DRAWINGS:

1. GENERAL: The drawings included in the project manual are functional in nature and do not show exact locations of equipment or interconnections between equipment. The Contractor's Systems Integrator shall prepare detailed installation drawings as specified below.

Drawings prepared in AutoCAD version 2010 with borders and title blocks identifying the project, system, revisions to the drawing, and type of drawing. Each revision of a drawing shall include the date and description of the revisions. Drawing prints shall be 11" x 17" with a minimum lettering size of 1/8".

Diagrams shall carry a uniform and coordinated set of wire numbers and terminal block numbers in compliance with panel wiring, Section 16176 and Section 17110, to permit cross-referencing between contract documents and the drawings prepared by the Contractor.

2. CONNECTION DIAGRAMS: Show components of a control panel in an arrangement similar to the actual layout of the panel including internal wiring between devices within the panel. Show terminal blocks used for internal wiring or field wiring, identified as such. Indicate insulation color code, signal polarities, and wire numbers and terminal block numbers.

3. INTERCONNECTION DIAGRAMS: Show panels, panel devices, and field devices with wire numbers, cable numbers, raceway numbers, terminal box numbers, terminal block numbers, panel numbers, and field device tag numbers.

4. ELEMENTARY OR SCHEMATIC DIAGRAM: Shows, by means of graphic symbols, the electrical connections and functions of a specific circuit arrangement. Provide schematics for internal panel power distribution, lighting, and any panel HVAC.

5. ARRANGEMENT, LAYOUT, OR OUTLINE DRAWINGS: Show the dimensioned external and interior control panel views with components and Bill of Material. Provide panel heat load calculations, and indicate cooling or ventilation provisions as required.

6. NETWORK BLOCK DIAGRAM: A network block diagram is a diagram of the overall SCADA system, with annotated boxes to show the primary network components (controllers, hubs, switches, computers, displays), and annotated interconnecting lines that show the system communication media and communication protocols.

7. LOOP DIAGRAMS: Provide loop diagrams for analog and discrete loops interconnected into the control system circuits:

a. Prepare per ISA S5.4 – Loop Diagrams using the Example Loop Diagrams where included.

b. Show device element wiring of the system.

c. Show circuits for hardwired device interlocks.

d. Show circuit cable and wire cable numbers, signal polarities, and terminal block numbers.

1.05 SUBMITTALS

The following information shall be provided in accordance with and Section 01300:

1. A copy of this specification section, with addendum updates included, and all referenced and applicable sections, with addendum updates included, with each paragraph check-marked to indicate specification compliance or marked to indicate requested deviations from specification requirements. A check mark shall denote full compliance with a paragraph as a whole.

   If deviations from the specifications are indicated, and therefore requested by the Contractor, each requested deviation shall be underlined and denoted by a number in the margin to the right of the identified paragraph, referenced to a detailed written explanation of the reasons for requesting the deviation.

   The Engineer shall be the final authority for determining acceptability of requested deviations. The remaining portions of the paragraph not underlined will signify compliance on the part of the Contractor with the specifications.

Failure to include a copy of the marked-up specification sections, along with justification for requested deviations from the specification requirements, with the submittal shall be sufficient cause for rejection of the entire submittal with no further consideration.

2. Detailed product literature, showing product specifications and model number breakdown. Mark to denote features and options included. Include only the applicable pages.

3. Manufacturer's installation manual excerpts, as to be used for this project:

   a. Installation details/drawings.
   b. Electrical connection diagrams
   c. Calibration procedures.

4. Drawings and diagrams specified in paragraph 17000-1.04 B.

5. Nameplate list with material, tag number and description as specified herein.

6. Systems Integrator Evidence of Experience per paragraph 17000-1.02 B 3.

7. Data Sheets in accordance with ISA 20 for each instrument. Identical instruments may be submitted with one common ISA Data Sheet and accompanying tag list.

Review the submittal requirements specified in other Division 17 Sections.

PART 2--PRODUCTS

2.01 GENERAL

A. MATERIALS AND QUALITY:

Equipment material shall be new, free from defects, and industrial-grade, as specified. Each type of instrument, instrument accessory, and device used throughout the work shall be manufactured by one firm, where possible.

Electronic equipment shall be of solid-state construction with printed or etched circuit boards of glass epoxy of sufficient thickness to prevent warping.

B. ENCLOSURES:

Table A specifies the instrument and control panel enclosure material and minimum NEMA rating for the location and application.

Table A

Location	Enclosure Material and NEMA Rating
Indoor: Architecturally Finished Area	NEMA 12: mild steel
Indoor: Electrical Room	NEMA 12: mild steel
Indoor: Process Areas	NEMA 4X: 316 Stainless Steel
Indoor: Corrosive Area	NEMA 4X: 316 Stainless Steel
Outdoor: Corrosive Area	NEMA 4X: 316 Stainless Steel
Outdoor: Non-Corrosive Areas	NEMA 4X: 316 Stainless Steel
Corrosive Area (Hypochlorite)	NEMA 4X: Non-metallic
Hazardous Area:	NEMA 7: Galvanized Malleable Iron or Aluminum or NEMA 4X and UL listed or FM Approved for the Hazardous Area.
Hazardous and Corrosive Area	NEMA 7: Iron or Aluminum with factory applied corrosion resistant coating or NEMA 4X and UL listed or FM Approved for the Hazardous Area.

2.02 NAMEPLATES

Nameplates shall be provided for all field mounted instrument, analyzer, or equipment specified in Division 17. Nameplate lettering shall include the equipment or instrument loop title and the instrument or equipment tag number, where nameplate engraving is not specified or shown. Nameplates shall be machine engraved black phenolic with white 5/32-inch high lettering, as minimum, unless otherwise specified or shown. Nameplate wording may be changed without additional cost or time, if changes are made prior to commencement of engraving.

Nameplates shall be attached to support hardware with a minimum of two self-tapping type 316 stainless steel screws in a readily visible location so the nameplate will remain to identify the service when the device is removed. Field instrument nameplates shall be attached with braided stainless steel straps where not stand mounted.

2.03 PRODUCT DATA

The following Product Data shall be provided in accordance with Section 01300.

1. Record drawings specified by paragraph 17000-1.04 B and the schedules included in Division 17 shall be provided in accordance with Section 01720 in the latest AutoCAD format and PDF format on CD.

   Provide record drawing prints of all drawings following project start-up, but prior to acceptance of the work showing the final constructed state of the instrumentation and control systems.

2. Operating and maintenance information shall be provided in accordance with Section 01730. Include the following in each Operation and Maintenance manual:

   a. Final reviewed Submittals, including revised as-built record drawings.

   b. Manufacturer's operation and maintenance instructions, edited for this project.

   c. Written record of menu configuration, jumpers, switch settings, and other configurable parameters for each instrument.

PART 3--EXECUTION

3.01 INSTALLATION

A. GENERAL:

Equipment shall be installed in locations that are accessible for operation and maintenance services. Equipment not accessible shall be reinstalled at no cost to the Owner.

Installation, calibration, settings, and testing procedures are specified in Section 17000, Section 17200 – Instrument Index Part 3 Execution, and subsequent sections of Division 17

B. FIELD EQUIPMENT:

Equipment shall be provided with ports and adjustable items accessible for in-place testing and calibration. Install equipment between 48 inches and 60 inches above the floor or permanent work platform. Equipment shall be mounted to avoid shock or vibration that may impair operation. Equipment shall be mounted for unobstructed access and walkways. Equipment support systems shall not be attached to handrails, process piping or mechanical equipment.

Instruments and cabinets supported by concrete walls shall be spaced 5/8 inch by framing channel between instrument or cabinet and wall. Block wall shall have additional installation supports, as required, to avoid damage to the wall. Equipment supports shall be hot-dip galvanized after fabrication or shall be 316L stainless steel, as shown or specified.

Support systems including panels shall be designed in accordance with Section 01900 to prevent deformation greater than 1/8 inch in any direction under the attached equipment load and under an external load of 200 pounds.

In wet or outdoor areas, conduit penetrations into instrument housing shall be made through the bottom (preferred) or side of enclosures to minimize water entry from around or from inside of conduits. Provide conduit hubs for connections and waterproof mastic for moisture sealant.

Nameplates shall be provided for all field mounted equipment. Nameplates shall be attached to support hardware with a minimum of two self-tapping Type 316 stainless steel screws in a readily visible location, but such that if the field device is changed out, the nameplate will remain to identify the service.

C. ELECTRICAL POWER CONNECTIONS:

Equipment electric power wiring shall comply with Division 16. Power disconnect switches shall be provided within sight of equipment and labeled to indicate the specific equipment served and the power source location. "Within sight of" is defined as having an unobstructed view from the equipment served and within 50 feet of the equipment served.

Equipment power disconnect switches shall be mounted between 36 inches and 72 inches above the floor or permanent work platform. Where equipment location requirements cannot be met by a single disconnect switch, provide two disconnect switches: one at the equipment and one at the work platform.

Provide a surge arrestor on each 120 volt AC disconnect switch serving equipment located outdoors. Surge arrestor shall be Telematic, LP Series or equal.

D. SIGNAL CONNECTIONS:

Equipment electric signal connections shall be made on terminal blocks or by locking plug and receptacle assemblies. Flexible cable, receptacle and plug assemblies shall be used where shown or specified.

Jacketed flexible conduit shall be used between equipment and rigid raceway systems. Flexible cable assemblies may be used where plug and receptacle assemblies are provided and the installation is not subject to mechanical damage in normal use. The length of flexible conduit or cord assemblies shall not exceed 2 feet, except where sufficient length is required to allow withdrawal of instruments for maintenance or calibration without disconnection of conduit or cord assemblies.

3.02 FIELD TESTS AND INSPECTIONS

A. DELIVERY INSPECTION:

The Contractor shall notify the Owner's Representative upon arrival of any material or equipment to be incorporated into the work. The Contractor shall remove protective covers or otherwise provide access in order that the Owner's Representative may inspect such items.

B. INSPECTION AND INSTALLED TESTS:

Refer to Section 17030 – Process Instrumentation and Control System Testing.

END OF SECTION

SECTION 17030

PROCESS INSTRUMENTATION AND CONTROL SYSTEM TESTING

PART 1--GENERAL

1.01 DESCRIPTION

This section specifies Contractor and Systems Integrator performance in testing and documentation of process instrumentation and control system materials and equipment (PICS).

The term instrumentation covers field and panel instruments, analyzers, primary sensing elements, transmitters, power supplies, and monitoring devices.

Provide the labor, tools, material, power, and services necessary to provide the process instrumentation and control system inspection and testing specified herein. Coordinate all testing with Section 01660 and 17990:

A. FACTORY ACCEPTANCE TESTING (FAT)

B. PRE-OPERATIONAL PERFORMANCE TESTING SEQUENCE:

1. Wiring Testing
2. Network and Bus Cable System Inspection and Testing
3. Piping Testing
4. Installation Inspection
5. Instrumentation Calibration
6. Loop Testing

C. FUNCTIONAL TESTING SEQUENCE:

1. Process Control Strategy Testing
2. Control System Closed Loop Commissioning
3. Functional Checkout

D. OPERATIONAL TESTING:

1. System Acceptance Testing (SAT)

1.02 QUALITY ASSURANCE

A. PICS TESTING MANAGER:

The Contractor or Systems Integrator shall appoint a startup engineer or qualified specialist as PICS Testing Manager to manage, coordinate, and supervise the testing work.

The PICS Testing Manager shall have at least 5 years of total experience, or experience on at least five separate projects, in managing the testing and startup of similar electrical and instrumentation control systems. The quality assurance program shall include:

1. Definition of process areas and systems, with testing executed on an area by area basis, based on the P&ID drawings.

2. Testing for each process area executed in sequential tasks.

3. Regularly updated testing status tracking by process area, system, and task.

4. Regularly updated separate testing documentation for each process system.

B. REFERENCES:

This section contains references to the following documents with additional references listed in Section 17000.

All references shall be to the current edition of the document unless specifically stated otherwise. They are a part of this section as specified and modified. In case of conflict between the requirements of this section and those of the listed documents, the requirements of this section shall prevail.

Unless otherwise specified, references to documents shall mean the documents in effect at the time of Advertisement for Bids or Invitation to Bid (or on the effective date of the Agreement if there were no bids). If referenced documents have been discontinued by the issuing organization, reference to those documents shall mean the replacement documents issued or otherwise identified by that organization or, if there are no replacement documents, the last version of the document before it was discontinued.

Where document dates are given in the following listing, reference to those documents shall mean the specific document version associated with that date, whether or not the document has been superseded by a version with a later date, discontinued or replaced.

Reference	Title
ISA RP7.1	
ISA S51.1	Process Instrumentation Terminology

C. PROJECT LABELING:

The items specifying project labeling herein shall include the following as a minimum: Owner's name, facility name, project name, and project number.

1.03 SUBMITTALS

Submittal material, to be submitted in accordance with Section 01300, shall consist of the following:

A. QUALIFICATION SUBMITTAL:

Provide the following submittal in accordance with Section 01300-Submittals:

1. PICS Testing Manager Qualifications and resume per paragraph 17030-1.02A.

2. Proposed process area and process system breakdowns.

3. Example test forms per paragraph 17030-3.[01 D], revised to show Project Labeling per paragraph 17030-1.02 D.

4. Example I/O interface summary per paragraph 17030-2.02 D.

B. NETWORK TESTING QUALIFICATION SUBMITTAL:

1. Qualifications of independent industrial network testing firm and staff performing the inspection and testing.

C. DEFINITION SUBMITTAL:

Provide the following submittal after review of the Qualification Submittal:

1. Control descriptions per paragraph 17030-2.02 C.

2. I/O Interface Summaries per paragraph 17030-2.02 D.

3. Testing status spreadsheets per paragraph 17030-2.02 A. 3.

4. Test procedures per paragraph 17030-3.01 D.

5. Proposed test forms per PART 3 of this Section 17030, detailed for each test for this project.

6. Certified Factory Calibration Reports.

7. Provide a copy of this specification and the referenced and applicable sections with addenda updates included with each paragraph check-

marked to indicate specification compliance or marked to indicate requested deviations from specification requirements.

8. Provide a copy of Section 17200 Instrument Index with Addenda updates included, marked to indicate requested deviations from specified requirements.

9. Provide a copy of all referenced and applicable Instrumentation Drawings with addenda updates included, marked to indicate requested deviations from specified requirements.

10. Provide a copy of all referenced and applicable Electrical Drawing's Control Diagrams with addenda updates included, marked to indicate requested deviations from specified requirements.

11. Failure to include a copy of the specifications and drawings with the submittal shall be cause for rejection of the entire submittal with no further consideration.

D. FAT:

1. FAT schedule and location.

PART 2--PRODUCTS

2.01 GENERAL

The PICS Testing Manager shall provide test forms, documentation, and records as specified in the following paragraphs.

2.02 TESTING DOCUMENTATION

A. DOCUMENTATION RECORDS:

The PICS Testing Manager shall develop a records keeping system to document progress and completion for each task in each process area or system. The following shall be kept current and available for inspection on-site at all times in a location designated by the Engineer:

1. PICS Testing Manager's qualifications, project startup and testing history, including resume per paragraph 17030-1.02 A.

2. List of names of Contractor's and System Integrator's personnel associated with final construction and testing, and normal and emergency contact telephone numbers

3. Testing Status spreadsheet with breakdown for each process area and process system, with percentage complete on each testing sequence task.

4. Test Report Volumes.

B. TEST REPORT VOLUMES:

The Contractor shall develop and maintain testing documentation for each process area in separate volumes. Each volume shall be kept current and available for inspection on-site at all times in a location designated by the Engineer. Each volume shall include the following as a minimum:

1. Three-ring binder with front cover and spine labeled: "Testing Documentation including Project Labeling per paragraph 17030-1.02 D.

2. Table of Contents with same labeling as the volume cover with tabs for each section:

3. Section 1 – Control Description

4. Section 2 – I/O Interface Summary

5. Section 3 – Instrument Index

6. Section 4 – Test Forms

7. Section 5 – Certified Factory Calibration Reports

8. Section 6 – Final Test Report

C. CONTROL DESCRIPTION:

Provide a control description outlining operation for each process area's system. The Control Description Specification Section 17900 may be used as a basis.

D. I/O INTERFACE SUMMARY:

Provide I/O spreadsheets for each process area's system, per Section 17990. Spreadsheets to include the following for each I/O point:

1. Signal number/tag

2. Annotation description that may be logically abbreviated and that is subject to approval.

3. Complete physical I/O channel designation and addressing or communication I/O register designation.

4. True/False status designations for digital I/O.

5. Process range; engineering units and any multipliers; and raw signal range count for analog I/O.

6. Signals: Fixed point and scaled at the Controller with minimum four significant implied digits of scaling. E.g.: 0 to 1400 at Controller for a pH range of 0 to 14 at Operator Interface.

7. Provide Operator Interface scaling to display decimal digits required.

E. INSTRUMENT INDEX:

Provide a detailed Instrument Index. The Instrument Index from Section 17200 may be used as a basis. Provide details on calibration ranges, setpoints, and deadbands.

2.03 PRODUCT DATA

Provide the following product data submittal after completion of testing.

The following information shall be provided in accordance with specification Section 01300:

1. Completed test forms per PART 3.

2. List of factory calibrated items and calibration certificates.

3. Documentation of network data communication nodes for network type instruments, devices, and variable frequency drives.

4. Final Test Report assembled in a three-ring binder and submitted at the completion of the inspection and testing activities for a process area.

   The binder cover and spine shall be labeled to identify the project name and process area. Test report shall include the applicable test procedures for the process area and the completed inspection and test report forms associated with the equipment and systems of that area.

   Test results shall be organized by equipment item or system with individual, labeled tab dividers to identify each. System deficiencies and non-compliant test results identified in the final test report shall be acknowledged by the responsible testing entity as corrected.

PART 3—EXECUTION

3.01 GENERAL

A. GENERAL REQUIREMENTS:

Materials, equipment, and construction included under this specification shall be inspected in accordance with this section and subsequent sections of this division. Testing shall be performed by the Contractor in accordance with this and subsequent sections of this division.

No required test shall be applied without prior notice to the Engineer. Between 60 and 70 days before the commencement of any testing activity, the Contractor shall provide a detailed step-by-step test procedure complete with forms for the recording of test results, testing equipment used, and a place for identification of the individual performing or, if applicable, witnessing the test.

Provide detail assistance to the Contractor in generating form 01660-A, customized for this project. Submit detailed form prior to testing per the requirements of Section 01660.

B. TECHNICIAN QUALIFICATIONS:

Field instruments and analyzers shall be calibrated and set up by a certified instrument technician qualified to calibrate the instrumentation.

Technicians shall be qualified by completion and certification from training courses offered by The Instrumentation, Systems, and Automation Society (ISA), the instrumentation and analyzer manufacturer's training courses, or technician training courses at a recognized trade school that specializes in instrumentation calibration.

C. TEST EQUIPMENT AND MATERIALS:

Provide test equipment to conduct the specified tests that simulate inputs and read outputs with a rated accuracy at the point of measurement at least three times greater than the component under test.

Test instruments shall have a current calibration sticker showing date of calibration, deviation from standard, name of calibration laboratory and technician, and date recalibration is required. Certified calibration reports traceable to the National Institute of Standards and Technology shall be included with the final test report.

Provide a documenting calibration system to conduct process instrumentation calibration activities that consist of a documenting process calibrator and an instrumentation data management software system that captures the calibration results and electronically document instrument data, date of calibration, calibration procedures, and as-found and as-left instrument calibration data.

Provide buffer solutions and reference fluids for tests of analytical equipment.

Provide a communications and software package to record final configuration parameters and settings for variable frequency drives with the parameters acquired by connection to the network that record the configuration settings without manual data entry or transcription of values.

Vendor software tools may document the systems where a licensed copy of the identical software including connectors, cables, keys, interface cards and devices required for operation is submitted with the final documentation files.

D. FIELD TEST PROCEDURE DOCUMENTATION:

Test procedures submitted for approval within 90 days from the date of Notice to Proceed.

Test procedures for each analog and discrete loop in the process control system shall be organized and assembled in separate volumes for each process area. Final test records shall be submitted in electronic form by scanning and converting the records and files to Adobe PDF format, to preserve actual signatures and signoffs.

Test procedure documentation shall include a detailed, step-by-step description of the required test procedure, panel and terminal block numbers for points of measurement, input test values, expected resultant values, test equipment required, process setup requirements, and safety precautions.

Test report forms for each loop, including forms for wiring, piping, and individual component tests, shall be included with the test procedure documentation. The actual test results shall be recorded on these forms and a final test report assembled as specified in paragraph 17030-3.05.

Test report forms shall be preprinted and completed to the extent possible prior to commencing testing. Test report forms that document the field test procedures shall include the following information:

1. Project name
2. Process area associated with the equipment under test.
3. Instrument loop description.
4. Instrument loop identification number.
5. Instrument nameplate data.
6. Instrument setup and configuration parameters.
7. Time and date of test.
8. Inspection checklist and results.
9. Reference to applicable test procedure.
10. Expected and actual test results for each test point in the loop including programmable controller data table or register values.
11. Test equipment used.
12. Space for remarks regarding test procedure or results, unusual or noteworthy observations, etc.

13. Name, date, and signature of testing personnel.

14. Test witness' name and signature.

E. PERFORMANCE DEVIATION TOLERANCES:

Tolerances shall be specified in Division 17. Where tolerances are not specified, refer to the manufacturer's published performance specifications.

Overall accuracy requirements for loops consisting of two or more components shall be the root-summation-square (RSS) of the component accuracy specifications. Tolerances for each required calibration point shall be calculated and recorded on the associated test report form.

F. INSTALLED TESTS:

Equipment and System Performance and Operational Testing - Section 01660 specifies testing of the mechanical, electrical, instrumentation and HVAC systems. The Contractor's Quality Assurance Manager shall coordinate, manage, and supervise the quality assurance program that includes:

1. Testing plan with the sequence for the test work.
2. Calibration program for all instruments and analyzers.
3. Documentation program that records tests results.
4. Performance testing program systems.

Test forms provided shall conform to the requirements of reference forms 17000-A through 17000-K included in Section 01999. Additional or detailed forms shall be developed as necessary to suit complex instrumentation. Usage of terms used on test forms shall comply with ISA S51.1.

G. WITNESSING:

The Engineer reserves the right to observe factory and field instrumentation testing and calibration procedures. The Engineer shall be notified prior to testing, as specified herein.

3.02 FACTORY TEST

A. FACTORY ACCEPTANCE TEST (FAT):

1. GENERAL: Control system equipment shall be subject to a Factory Acceptance Test with the factory acceptance tests and subsequent retests witnessed by the Engineer and Owner**.** Control system panel programmable logic controllers shall be loaded with the PLC software, Operator Interface software and the programming and graphic configuration application software at the control system equipment supplier's factory prior to the FAT.

Equipment, panel instruments, panels, or cabinets shall be inspected with factory testing performed. Provide written notice to the Engineer thirty working days before the commencement of the FAT activity and include:

a. Schedule for the FAT.

b. Location of the FAT.

c. Testing equipment used.

d. Detailed test procedure with forms for the recording of test results.

e. Sign-off spaces for the individuals performing and witnessing the tests.

2. FACTORY ACCEPTANCE TEST PROCEDURES: Panels provided shall be interlocked or networked as applicable, operated, and checked-out by the equipment supplier prior to the FAT. Submit certification indicating that the panels are ready for the FAT.

The FAT shall include the following:

a. Visual inspection of equipment, instruments, control panels, and graphic displays.

b. Validation of each input loop and output loop by simulated signals for analog inputs and by shorting discrete inputs.

c. Validation shall include:

1) Monitoring state changes on operator interface screens based on the inputs state change.

2) Observation of online PLC programming application software with the associated PLC outputs state change.

3) Outputs triggered by operator interface software devices (pushbuttons, sliders, manually-entered values, etc.)

4) Calibration and operation of instruments on or in the control panels.

d. Repair of loops which do not pass validation.

e. Retest of the FAT at no additional cost.

Panels that pass the FAT may be shipped to the site upon shipping schedule and storage accommodation approval by the Engineer.

3.03 PRE-OPERATIONAL PERFORMANCE TESTING

A. GENERAL REQUIREMENTS:

In general, tests shall be performed in the following order:

B. WIRING TESTS:

Electrical power and signal cable ring-out and resistance testing. Conducted in accordance with Sections 16000 and 16030. Wiring tests shall not be conducted until cables have been properly terminated, tagged and inspected.

1. Power and Control: Per Section 16030.
2. Signal: Test form 17000-A.

C. NETWORK AND BUS CABLE INSPECTION AND TESTING:

Inspected and tested by independent industrial network testing firms.

Proprietary bus systems may be tested by the manufacturer's qualified field services technician. Manufacturer’s sales personnel are not considered to be qualified technicians unless qualifications are documented and certified by the manufacturer.

Standardized networks and buses may be tested by a qualified independent network testing service. The following types of cabling and networks shall be tested and certified by the independent industrial network testing firm:

1. Ethernet system cabling

2. DeviceNet trunk and branch cabling

3. Other networks provided as a part of a packaged monitoring or control system.

Control and instrumentation bus cabling shall be tested and verified using the standards that apply to the specific cable and bus type as follows:

1. Ethernet Category 5E and Category 6: per TIA/EIA-568B standards

2. DeviceNet: per the Rockwell International or Open DeviceNet Vendors Association.

3. Pre-Active Testing: Prior to energizing, cabling shall be inspected and tested to verify the following:

    a. Media type and specifications.

    b. Physical routing and project specific cable identification tagging.

c. Correct termination installation and connection of conductors to pins at terminations.

d. Record cable run length and compare to the manufacturer or industry standards to verify lengths are within specifications.

e. Locations and values of network termination resistance.

f. Integrity and grounding of cable shields.

g. Values of transient protection (surge) elements.

h. Firmware revision level of network devices available prior to energization.

i. Settings of dip switches and configuration parameters.

4. Active System Testing: After the cable or network system has been activated for testing, provide diagnostic monitoring and signal analysis for the bus network system to evaluate network and bus integrity and data transfer quality. The following parameters shall be measured, verified, and recorded:

a. Node addressing.

b. Signal attenuation before and after any repeater device and at the farthest point in the network.

c. Total network trunk voltage and current loading as applicable.

d. Baud rate, message traffic rate, percent bandwidth used, error rate, lost packet count.

e. Firmware revision level of the network devices.

f. Pre-active and active testing shall fall within the specified range of values established by the referenced standards.

g. Correct the functionality of networks and devices connected to the network.

D. PIPING TESTS:

1. Pneumatic Piping Systems: Tested for leaks in compliance with Section 17140. Pneumatic piping systems shall be tested for leaks in compliance with ISA RP7.1, except performed at ten times the normal system operating pressure. Test form 17000-B.

2. Liquid Piping Systems: Tested for leaks in compliance with Section 15050.

E. INSTRUMENT AND COMPONENT INSPECTION:

PICS components inspection activities include the following:

1. Compare and validate instrument type and nameplate data with the drawings, specifications, and data sheet.

2. Validate instrument identification tag.

3. Confirm instrument installation conforms to drawings, specifications, and manufacturer's instructions.

4. Verify proper conductor termination and tagging.

5. Visual check for physical damage, dirt accumulation, and corrosion.

6. Verify including isolation amplifiers, surge protection, and safety barriers are properly installed.

7. Report deficiencies identified within 24 hours of discovery. No instrument or system component shall be tested until all deficiencies are addressed.

F. INSTRUMENTATION CALIBRATION:

1. Instruments and final elements shall be field calibrated in accordance with the manufacturer's recommended procedures and tested in accordance with the Contractor's test procedure.

2. Individual Component Calibration and Testing shall not commence until Instruments and Component Inspections are completed and documented to the satisfaction of the Engineer.

3. Analog instrument calibrated at 0, 10, 50, 90, and 100 percent of the specified full scale range. Each signal sensing trip and process sensing switch shall be adjusted to the required setting. Test data recorded on test forms as specified herein

4. Final element alignment tested and adjusted to verify that each final element operates smoothly over the full range in response to the specified process control signals

5. Test data shall be entered on the applicable test forms at the time of testing: Alarm trips, control trips, and switches shall be set to initial values specified in Section 17200 Instrument Index at this time. Final elements shall be checked for range, dead-band, and speed of response.

6. Any component that fails to meet the required tolerances shall be repaired or replaced by the manufacturer. Repeat the specified tests until the component is within tolerance.

7. Install a calibration sticker on each instrument following successful calibration that indicates the date of calibration, the name of the testing company, and personnel who calibrated the instrument.
8. Test forms 17000-C through 17000-I.

9. Certified Test Reports: Field test and inspection activities include verification of instrument parameter setup, verification of instrument zero, and performance at three operating points within the instrument range. Instrument which fail to demonstrate proper performance shall be returned for re-calibration or replaced as agreed depending on the impact to the project as determined by the Engineer.

Where instrument field calibration is not feasible, certified factory calibration reports may be submitted that includes the name and address of the laboratory that conducts the calibration testing. Certified factory test reports may be submitted for the following instrument types in lieu of field calibration:

TABLE-A. FACTORY CALIBRATION INSTRUMENT LIST

Instrument Identification	Instrument Section	Description
FM	17212	Magnetic flow metering system
FM-C	17212	Magnetic flow metering system - compact
FTD	17212	Thermal dispersion flow metering system
FTT-F	17212	Transit time flow metering system, flanged
FVA	17212	Variable area flow transmitter
TNE	17211	Resistance temperature element, non-intrusive type
TRE	17211	Resistance temperature element, insertion type

G. LOOP TESTING:

1. Loop Testing shall not commence until the Individual Component Calibration and Testing has been completed and documented to the satisfaction of the Engineer.

2. Each instrument loop shall be tested as an integrated system. Check operation from field instruments to transmitter to receiving components to the vendor panel or the Plant Control System Operator Interface Station. Test signals shall be injected at the process impulse line connection where the measuring technique permits, and otherwise at the most primary signal access point.

3. Testing of loops with an interface to a programmable logic controller shall include verification of the programmable logic controller input/output

assignment and verification of operation of the input/output system and processor. Inspect the data table or register in the programmable logic controller memory to verify proper operation.

4. If the output control or monitoring device fails to indicate properly, corrections to the loop circuitry or device shall be made. The test shall be repeated until devices and instruments operate as required.

5. Correct loop circuitry and repeat the test until the instruments operate properly.

6. Test form 17000-J.

3.04 FUNCTIONAL TESTING

A. PROCESS CONTROL STRATEGY/FUNCTIONAL TESTING:

1. Control Strategy Testing shall not commence until the Loop Testing has been completed and documented to the satisfaction of the Engineer.

2. Control Strategy Testing is performed by the Programmer and consist of installing and debugging the PLC control logic program, verifying the interface points between the PLCs and field devices and equipment, and exercising the control strategies. Control Strategy Testing will be performed on one PLC at a time.

3. Provide qualified personnel to immediately correct any deficiencies in the Work that may be encountered during Control Strategy Testing. Failure of the Contractor to provide such personnel in a timely manner may prolong the time allotted to complete Control Strategy Testing.

B. CONTROL SYSTEM CLOSED LOOP TESTING:

1. Closed-Loop Commissioning shall not commence until the Control Strategy Testing has been successfully completed and documented to the satisfaction of the Engineer

2. Closed-loop commissioning tests, performed as part of the system tests, shall demonstrate stable operation of each loop under operating conditions. Tests shall include adjustment of loop tuning parameters.

3. Tuning parameters: gain (or proportional band), integral time constant, and derivative time constant for each control loop, adjusted to provide 1/4-amplitude damping, unless otherwise specified.

4. The loop response to a step disturbance shall be provided for each loop. Two graphs shall be made for cascaded control loops, one showing the secondary loop response with its set point in manual, and the second showing overall loop response.

5. Control loops with "batch" features shall be adjusted to provide optimum response following start-up from an integral action saturation condition.

6. Graph recording shall be provided showing the response and made at sufficient speed and amplitude to show 1/4 amplitude damping. Label to show loop number and title, and settings of parameters and set point.

7. Where a loop is controlled under the direction of a programmable logic controller, the Engineer will perform the necessary adjustment of loop tuning parameters and setpoints; Contractor shall record the loop response, adjusting final elements, and assuring total integrated loop performance as specified.

C. FUNCTIONAL CHECKOUT:

Conducted to verify the operation of discrete and hardwired control devices, refer to Section 01660. Exercise the operable devices and energizing the control circuit. Operate control element, alarm device, and interlocks to verify the specified action occurs.

3.05 OPERATIONAL TESTING

System Acceptance Test (SAT) shall be performed after component and subsystem tests have been completed. The test of the completed system shall be performed in full operation and shall demonstrate that all functional requirements of this specification have been met. SAT shall demonstrate the following:

1. Each component of the system operates correctly with all other components of the system.

2. Analog control loops operate in a stable manner.

3. Hard-wired and software equipment interlocks perform correctly.

4. Process control sequences perform correctly.

5. PLC application program performs monitoring and control functions correctly.

6. Operator interface graphics represent the monitoring and control functions correctly.

END OF SECTION

SECTION 17110

INSTRUMENT AND CONTROL PANELS

PART 1--GENERAL

1.01 DESCRIPTION

A. SCOPE:

This section specifies requirements for panels, cabinets, consoles, termination cabinets, and 19-inch electronic racks for instrument, control, and communication] equipment for the Little River Water Reclamation Facility Project per the Panel Schedule herein.

Provide the instrument, control, and monitoring features indicated on the P&ID and electrical drawings. Panels shall be arranged to separate control and instrument devices from power wiring. Panel shall be arranged for dedicated field wiring terminations rated for 600 Vac or less for power, control, and instrument signal wiring shall be fabricated by a UL-508A recognized facility and shall bear the appropriate UL 508A Industrial Control Panel label. Panels for Hazardous (Classified) Locations shall bear the appropriate UL 698A label.

Transmitters, Analyzers, signal conditioning modules and other equipment or devices as specified in the other Division 17 sections.

Panels that contain programmable logic controllers (PLC) and operator interface stations (OIS) units shall be as indicated in the Panel Schedule. Specific panel devices are specified herein and in Section 16175 – Miscellaneous Electrical Devices.

PLC and OIS shall comply with the specified products in Division 17. Panels that do not comply with the specified products and specified logic method, hardwired or PLC logic, shall not be accepted. Cost to retrofit the panel as specified shall be borne by the panel supplier. Corrections or modifications to UL 508A Industrial Control Panels shall be transported to the panel supplier's facility for corrections, testing, relabeling and inspection.

Field modifications require a UL inspector site inspection for approval of panel corrections and to re-label the panel after the field modifications are completed.

Refer to Local Control Panels - Section 16176 that specifies requirements for manufacturer, vendor, and Contractor provided panels that include motor controllers, combination motor starters, control devices, and logic devices as shown on the electrical drawings.

B. PANEL SCHEDULE:

	Panel No.	Spec / P&ID	Features *	Enclosure Type	Panel Title	E-Dwgs / Notes
1	LCP-2000	17110 / Multiple	1, 2, 5	NEMA-12	Master Control Panel	Main Electrical Room
2	OIT-2000	17110 / 00-I-008	2	NEMA-4X	Headworks Area Operator Interface	Headworks Area (Hazardous Area)
3	LCP-2021-1	17110 / 00-I-008	3	NEMA-4X	GO/NO-GO Control Panel	Headworks Area
4	LCP-2021-2	17110 / 00-I-008	3	NEMA-4X	GO/NO-GO Control Panel	Headworks Area
5	LCP-2021-3	17110 / 00-I-008	3	NEMA-4X	GO/NO-GO Control Panel	Headworks Area
6	VCP-2041	11128 / 20-I-604	1, 2, 5	NEMA-4X	Fine Screen 1 Control Panel	Fine Screen Area
7	VCP-2042	11128 / 20-I-604	1, 2, 5	NEMA-4X	Fine Screen 2 Control Panel	Fine Screen Area
8	VCP-2043	11128 / 20-I-604	1, 2, 5	NEMA-4X	Fine Screen 3 Control Panel	Fine Screen Area
9	VCP-2050	11148 / 20-I-604	1, 2, 5	NEMA-4X	Grit Classifier Control Panel	Grit Classifier Area
10	OIT-3000	17110 / 00-I-008	2	NEMA-4X	Biological Basins Area Operator Interface	Biological Basins Area
11	LCP-4000	17110 / 00-I-008	1, 2, 5	NEMA-4X	MBR Feed Pump Station Control Panel	MBR Feed Pump Station
12	OIT-5000	17110 / 00-I-008	2	NEMA-4X	Membrane Bioreactor Area Operator Interface	Membrane Bioreactor Area
13	VCP-5000	11300 / 50-I-601	1, 2, 5	NEMA-12	Membrane Bioreactor Control Panel	Main Electrical Room
14	OIT-5020	17110 / 00-I-008	2	NEMA-4X	Effluent Area Operator Interface	Effluent Area
15	OIT-5100	17110 / 00-I-008	2	NEMA-4X	Chemical Area Operator Interface	Chemical Area
16	VCP-5110	11737 / 51-I-601	1, 2	NEMA-4X	UV Bank 1 Control Panel	UV Area
17	VCP-5120	11737 / 51-I-601	1, 2	NEMA-4X	UV Bank 2 Control Panel	UV Area
18	VCP-5141	11436 / 51-I-604	3	NEMA-4X	Air Compressor Control Panel	Plant Water Hydropneumatic Tank System
19	VCP-9010	16364 / 90-I-601	1, 2	NEMA-12	Generator 1 Control Panel	Generator 1
20	VCP-9020	16364 / 90-I-602	1, 2	NEMA-12	Generator 2 Control Panel	Generator 2

1* - Programmable Logic Controller (PLC) or Remote I/O devices
2* - Panel mounted Operator Interface Station (OIS)
3* - Hardwired control logic required
4* - Windowed outer door and inner door for displays or devices.

5* - UPS
6* - Fans
7* - Heating
8* - Air Conditioning
9* - Sun/Rain Hood

C. PANEL DESIGN:

1. GENERAL: Panel hardware and software is specified in other Division 17 sections.

2. CONTROL POWER DISTRIBUTION: Panel containing 120-volt powered equipment shall use the din-rail power distribution method with fuses and blown fuse indication. Power is restricted to 120 Vac and 24 Vdc**.**

3. POWER SUPPLIES: Panel containing direct current powered instruments or serving as the termination point for transmission loop powered field instruments shall contain direct current power supply system as specified herein.

4. AIR SUPPLIES: Each panel containing pneumatically operated instruments shall be provided with a dual service regulator and distribution manifold, and all other devices necessary to perform the functions specified. Air distribution and control devices shall be provided as specified in Section 17140.

5. ELECTRICAL CONTROL DEVICES: Pushbuttons, indicating lights, relays, and similar equipment located in panels specified in this section shall comply with the requirements of Section 16175.

6. UNINTERRUPTIBLE POWER SUPPLIES: Panel mounted 120 Vac input and 120 Vac output are specified herein.

1.02 QUALITY ASSURANCE

A. REFERENCES:

This section contains references to the following documents that are part of this section as specified and modified. Where a referenced document contains references to other standards, those documents are included as references under this section as if referenced directly. In the event of conflict between the requirements of this section and those of the listed documents, the requirements of this section shall prevail.

Unless otherwise specified, references to documents shall mean the documents in effect at the time of Advertisement for Bids or Invitation to Bid or on the effective date of the Agreement if there were no Bids. If referenced documents have been discontinued by the issuing organization, references to those documents shall mean the replacement documents issued or otherwise identified by that organization or, if there are no replacement documents, the last version of the document before it was discontinued.

Where document dates are given in the following listing, references to those documents shall mean the specific document version associated with that date, regardless of whether the document has been superseded by a version with a later date, discontinued or replaced.

Reference	Title
EIA RS-310C	Racks, Panels, and Associated Equipment
NEMA 250	Tests for Flammability of Plastic Materials for Parts in Devices and Appliances
UL 94	Tests for Flammability of Plastic Materials for Parts in Devices and Appliances
UL 508A	Industrial Control Panels
UL 698A	Industrial Control Panels Relating to Hazardous (Classified) Locations

This Section references other sections with associated work specified therein:

1. Section 01660 specifies Equipment and System Performance and Operational Testing with reference to Contractor's Quality Assurance Manager that is responsible for startup commissioning of system including mechanical, HVAC, electrical, and instrumentation system.

2. Section 11010 Equipment Control Devices associated with Equipment Systems.

3. Section 16000 specifies raceways, conductors, and device requirements.

4. Section 17030 Instrumentation and Control System Testing

5. Section 17310 Programmable Logic Controller, Operator Interface Stations, and software requirements.

6. Section 17900 Control Specifications.

B. LISTED PRODUCTS:

Equipment and components shall be Underwriters Laboratory (UL) listed for the purpose per Section 16000 or UL recognized.

The control panels shall have factory applied UL 508A labels. Where intrinsic safety barriers are used within a control panel, provide UL 698A factory applied label as required by UL.

C. FACTORY TESTING:

Prior to shipment, the manufacturer shall test the functional operation of the control panel as described in the control description Section 17030.

D. SHIPMENT, PROTECTION AND STORAGE:

Equipment shipment, protection and storage shall conform to the requirements specified in Section 01605.

1.03 SUBMITTALS

A. GENERAL:

Submittals and transmittal procedures for submittals are defined in Section 01300. Submit In accordance with the procedures set forth in Sections 00710 and 01300 that include drawings, information and technical data for equipment and as required in Section 17000. Submittal information shall be included in one complete submittal.

1. A copy of this specification section, with addendum updates included, and all referenced and applicable sections, with addendum updates included, with each paragraph check-marked to indicate specification compliance or marked to indicate requested deviations from specification requirements.

   A check mark shall denote full compliance with a paragraph as a whole. If deviations from the specifications are indicated, and therefore requested by the Contractor, each deviation shall be underlined and denoted by a number in the margin to the right of the identified paragraph, referenced to a detailed written explanation of the reasons for requesting the deviation.

   The Owners Engineer shall be the final authority for determining acceptability of requested deviations. The remaining portions of the paragraph not underlined will signify compliance on the part of the Contractor with the specifications.

   Failure to include a copy of the marked-up specification sections, along with justification(s) for any requested deviations to the specification requirements, with the submittal shall be sufficient cause for rejection of the entire submittal with no further consideration.

2. A marked copy of specification Section 17000.

3. A marked copy of specification section 17030.

4. A marked copy of specification section 17000.

5. A marked copy of specification section 01660.

6. A marked copy of specification section 16175.

7. A marked copy of specification section 16176.

8. A copy of the contract document Process and Instrumentation diagrams relating to the submitted equipment, with addendum updates that apply to the equipment in this section, marked to show specific changes necessary for the equipment proposed in the submittal. If no changes are required, the drawing or drawings shall be marked "no changes required".

   Failure to include copies of the relevant drawings with the submittal shall be cause for rejection of the entire submittal with no further review.

9. Marked contract document Control Schematic diagrams related to the submitted equipment.

10. Marked contract document Control Single Line diagrams related to the submitted equipment.

11. Marked product literature of all the enclosure electrical devices and components mounted on or within the control panel.

12. List of miscellaneous items, cables, spare and replenishment parts, and chemicals to be provided, including MSDS information.

13. Dimensioned drawings:

    a. Exterior panel and layout
    b. Interior devices and layout
    c. Door-in-door construction devices, where required

14. Panel assembly drawings including sections showing clearances between face and rear mounted equipment.

15. Nameplate engraving schedule:

    a. Indicate engraving by line
    b. Character size
    c. Nameplate size
    d. Panel and equipment tag number and description

16. Heat load calculations for each cabinet based on the highest ambient temperature listed in Section 17000 for the area in which the subject panel will be located.

17. Wiring drawings:

    a. Schematic diagrams
    b. Internal wiring diagrams
    c. Connection diagrams

1.04 ENVIRONMENTAL CONDITIONS

Refer to Section 17000.

PART 2--PRODUCTS

2.01 FABRICATION

A. GENERAL:

Panels shall be designed for the seismic requirements of Section 17000. Structures, equipment, and devices shall be braced to prevent damage from specified forces. Equipment panels shall be capable of operation following a disturbance.

Nameplates with tag number and equipment description shall identify face-mounted instruments. Instruments shall be mounted for access to components and ease of removal. Cutouts for future equipment shall be blanked off with suitable covers. Instrument tag numbers shall be identified on the panel rear.

Face-mounted equipment shall be flush or semi-flush with flat-black escutcheons. Face-mounted instruments that are more than 6 inches deep, weigh more than 10 pounds, or exert more than a 4 ft-lb moment force on the face of the panel shall be supported underneath at the rear by a 1-inch x 1/8-inch thick steel angle.

Panels less than 60 inches high shall be provided with floor stands to raise the top of the panel to 60 inches above the floor or work platform. Panels that weigh less than 100 pounds may be wall mounted.

Panels with specified requirements including stainless steel or aluminum mounting requirements that are indicated on the project drawings or on the project details take precedence over the panel types or panel features indicated herein.

B. PANEL LAYOUT:

1. Provide 20 percent spare contiguous sub-panel area for future expansion.

2. Provide minimum of 20 percent spare terminal blocks, with a minimum of 10 analog, discrete, power.

3. Provide minimum of 12 inches clear space from the bottom of the panel to the bottom of the subpanel.

2.02 HEATING, VENTILATING AND COOLING

Forced air ventilation shall be provided for panels where indicated in the Panel Schedule and if the cabinet’s heat load calculations indicate that the interior temperature of the cabinet will exceed 115 degrees-F, under worst case conditions.

Ventilation for panel racks shall be venturi fans provided on 5-1/2-inch high-notched panel. Ventilation for consoles shall be similar to that for panel racks except EIA RS-310 mounting is not required. Fans shall be equipped with UL-approved washable filters and provide at least 240 cubic feet per minute (CFM). Fans shall be thermostatically controlled. Noise level at 3 feet from exterior wall and 30 degrees off axis shall not exceed 60 NC units.

Outdoor panels shall also be provided with thermostatically controlled space heaters. Space heater surface temperature that exceeds 120 degrees F requires an expanded metal guard. Thermostats shall be Honeywell T631B1013, Penn Controls A28AA-4, or equal.

Panel air conditioning cooling requirements shall be a cooling system that does not exchange cabinet interior air with ambient air. The cooling system shall be either a closed glycol loop heat exchange system or a CFC-free refrigeration system as required for the specified equipment and instrument complement and ambient temperature conditions.

Panel air conditioner shall be NEMA rated based on the installed area environment and the coils shall be Heresite, or equal coated and protected from corrosion.

2.03 PROTECTION COATING AND FINISH

Panels located outdoors or located in corrosive areas shall be bottom coated with waterproof coatings.

2.04 NAMEPLATES

External door-mounted components and the panel description shall be identified with plastic nameplates. Machine embossed metallic adhesive labels shall identify tag number of instruments inside panels. Nameplates shall be attached to panel surfaces, not to instruments.

The machine engraved laminated white phenolic nameplates with black lettering shall be provided for panel-mounted equipment. Nameplate engraving shall include the instrument tag number and description in 3/32-inch minimum size lettering.

The machine embossed metallic adhesive labels shall identify tag number of instruments inside panels. Nameplates shall be attached to panel surfaces, not to instruments.

The nameplates shall be attached to the panel with a minimum of two self-tapping 316 stainless steel screws. Provide RTV sealant for nameplates for NEMA-4X stainless steel panels.

The nameplate wording may be changed without additional cost or time prior to commencement of engraving. Submit nameplate legend with the panel submittal.

2.05 PANEL FEATURES

A. INTERCONNECTION WIRING:

Panel Interconnecting Wiring:

1. Panel control wiring: Single conductor stranded copper NFPA No. 70 Type MTW No. 16 AWG minimum, with an exception for factory supplied PLC wiring harnesses that are U.L. approved.

2. Panel instrument wiring: Twisted No. 16 AWG shielded pair or tri conductors.

3. Panel power wiring: Conductors specified in Division 16 and meet the NFPA No. 70 NEC requirements for power including phase, grounded, and grounding conductors.

4. Wiring shall be supported independently of terminations by lacing to panel support structure or by slotted flame retardant plastic wiring channels.

5. Wiring channels shall comply with UL 94, Type V.

6. Wiring channel fill shall not exceed 50 percent.

B. CONDUCTOR IDENTIFICATION:

Wiring shall be tagged at terminations with machine printed plastic sleeves with three-part wire numbers for instrument and control panel internal conductors:

1. Part-1: Prefix of the wire number shall be the instrument loop number or equipment tag number.

2. Part-2: Code letter and wire colors per the following tables.

3. Part-3: Number that identifies individual circuit conductor [Rung Number] [Terminal Number].

Code	120 Vac Conductor	Color
L	Power	Black
C	Control	Red
N	Neutral	White
PG	Ground	Green

Code	V dc Conductor	Color
PS	24 Vdc Power	Blue
PS	12 Vdc Power	Violet
S+	Signal (+)	Black
SG	Signal Ground	White
EG	Equipment Ground	Green
FV	Panel Foreign Voltage	Yellow

C. CONDUCTOR INSTALLATION AND PROTECTION:

1. Power and control wiring shall be carried in covered channels separate from low voltage signal circuits. An interior steel barrier shall be provided between AC control devices and the electronic equipment.

2. Terminal blocks shall be strap screw type rated for 600 volts. Each terminal trip shall have a unique identifying alphanumeric code at one end and a vinyl-marking strip running the entire length of the terminal strip with a unique number for each terminal. Numbers shall be machine printed and 1/8 inch high.

3. No more than two connections shall be made to one terminal.

4. Wire connectors shall be locking fork tongue or ring tongue insulated crimp type terminals.

5. Terminal blocks shall be:

    a. Buchanan 0621-1
    b. Allen-Bradley 1492-HM1 600 V 30-amperes, finger-safe terminal block.
    c. Allen-Bradley 1492-CD3 600 V 35-amperes with #8 screw terminal block for ring or spade terminals.
    d. Phoenix Contact or Weidmuller equal products.

D. FIELD WIRING:

Field wiring shall be connected to separate dedicated terminal blocks in a dedicated part of the panel where the field cables enter the panel.

E. FUSE AND FUSE HOLDERS:

1. Fuses for 120 Vac circuits shall have a minimum of 12,000-amperes interrupting capacity and blown fuse indicators.

2. Fuses for 24 Vdc circuits shall be fast acting glass tube type rated 1/8 or 1/10 amp for 4-20 mA loops.

3. Fuses for 24 Vdc circuits shall be 1/2 amp for the power supply to individual instruments.

4. Fuse holders shall be tip-out or draw-out type.

5. Provide Phoenix Contact or equal products.

F. CONTROL POWER:

120 Vac control power source: Single power source for all control and DC power. Dual power sources, one for control power and one for DC power. Dual power sources, one for PLC and DC power and one for PLC output [and input] control power.

1. Provide control power transformers, as required for the load.

2. Provide direct current power supplies, as required for the load.

3. Provide UPS for PLC and derived loop power as defined above, as required for the load.

G. PANEL POWER:

Panel power source:

1. Provide a 120 Vac circuit for the panel light, receptacle, heating, fan, heat exchanger, or air conditioner cooling load as required.

2. Provide a 120 Vac circuit for air conditioning load as required.

H. ACCESSORIES:

1. Panels greater than 24” high x 24” wide shall include GFCI convenience receptacles and fluorescent utility lights.

2. Receptacles and utility lights shall not be powered by the UPS, where included.

3. Print pocket.

4. Fold-up shelf of sufficient size, sufficient weight capacity, and the proper angle for supporting a laptop computer.

2.06 SURGE PROTECTION

Surge protectors shall be multi-stage, plug-in type selected to protect the equipment. Surge protectors shall be removable without changing the impedance of the circuit. Surge protectors product manufactures shall be:

1. Circuit Components Inc: Din Rail SDD-400 Series for Data or Analog Signals.

2. Circuit Components Inc: SPD-Series at the 120 AC incoming power.

3. Joslyn Model 1663-08

4. Taylor 1020FA

5. Phoenix Contact

6. Telematic

7. Edco

8. Or equal.

2.07 PANEL GROUNDING

Each panel shall be provided with two copper ground bars.

1. One bar (NEC required) shall be bonded to the panel or panel frame or back-plate and to the facility grounding system.

2. Second (signal) ground bar shall be mounted on insulated stand-offs and shall be bonded to the panel ground bar only at one point.

Signal circuits, signal cable shields, and low-voltage DC power supply commons shall be bonded to the signal ground bar.

Field analog wiring shields shall only be grounded at the signal ground bar. Test to verify that single ground point at panel signal ground bar.

Surge protectors and separately derived AC power supplies shall be bonded to the frame ground bar.

Panels exceeding 36-inches width shall contain ground bars shall be 1/4- by 1-inch copper bars extending the entire length of the panel interior at the bottom of the panel.

2.08 PANEL DRAWING PROTECTION

Provide wiring diagrams in accordance with Section 01300. Provide a panel-wiring diagram and schematic for each panel in a plastic bag or plastic container to avoid water damage and aging.

2.09 DIRECT-CURRENT POWER SUPPLIES

Nominal 24-volt direct-current instrumentation and control power supply:

1. Convection-cooled linear type or switching type.
2. Line regulation: 0.4 percent for line variations from 105 to 132 volts
3. Load regulation: 0.4 percent for load variations from 0 to full load.
4. Ripple and noise: Not exceed 100 mV peak-to-peak.
5. Hold-up time at maximum load: Not less than 16 milliseconds.
6. Continuous duty from 0 to 50 degrees C at rated load.
7. Output electronically current limited.
8. Over-voltage crowbar shutdown.
9. Output voltage:
   a. Rated 28 Vdc
   b. Adjustable plus or minus 5 percent
   c. Set to provide 26.4 volts to the panel direct current bus.
10. Power Supply: Lambda LZS series, or equal.

2.10 UNINTERRUPTIBLE POWER SYSTEM (UPS)

The UPS shall be on-line, computer-grade with electrical isolation including output neutral. UPS shall be packaged for panel enclosure mounting using a back-panel bracket or holder:

1. Nominal input voltage: 120Vac**.**
2. Nominal output voltage: 120Vac**.**

The online UPS system shall be provided with integral sealed no maintenance batteries, sized to provide full capacity backup power for 30 minute minimum at connected load with integral battery charger.

The panel supplier shall calculate the required kVA rating at 150 percent of connected load. Submit load calculations, schematic diagrams, and wiring connection diagrams. Provide battery cabling and other required cabling for a complete system.

The UPS shall be mounted within the panel on a pedestal or tray with stainless-steel legs to provide space for wire entry and passage.

Uninterruptible power supply systems shall be as manufactured by Best Power Technology, Inc., Necedah, American Power Conversion, Wisconsin, or equal.

2.11 SPARE PARTS

The following spare parts shall be provided:

1. Ten each of each type of light bulb used in the panels.

2. Five each of each type and rating of fuse used in the panels.

2.12 PRODUCT DATA

The following data shall be provided in accordance with Section 01300:

1. Manufacturer's operation and maintenance information as specified in Section 01730. Manual shall include final reviewed submittal and separate record of all final configuration, jumper, and switch settings.

2. Test results as specified in Section 17030-Part 2.

3. Manufacturer's certification for the performance of features of the specified equipment that cannot be readily inspected.

4. Special requirements for delivery of the information such as time, manner, place, or quantity.

5. Installation and training forms specified in Part 3.

PART 3--EXECUTION

3.01 GENERAL

Floor mounted cabinets shall be mounted and shimmed to precise alignment so doors operate without binding. Sealant shall be provided for conduit entering the panels.

Floor-mounted panels except in dry control rooms or electrical equipment rooms shall be mounted on 3-1/2-inch minimum height concrete pads or grouted bases as specified. Coating shall be provided for outdoor panels in contact on concrete. Field panels and cabinets shall be mounted in compliance with paragraph 17000-3.01 B.

Terminals and terminal blocks shall be sprayed after all terminations have been completed with a silicone resin similar to Dow Corning R-4-3117 conformal coating.

Provide panels with the Record As-built schematic, connection, and interconnection diagrams mounted behind plexiglass holder on the inside of the door. Place documentation in a water proof clear bag in the panel document holder.

3.02 OUTDOOR PANEL SHADE COVERS

Fabricate the custom aluminum panel shade cover and mount the panels facing away from the prevailing sun or wind.

Provide Sun/Rain covers per Electrical Detail for outdoor vendor, manufacture, and custom panels. Fabricate based upon known panel dimensions or accepted submittal drawing dimensions.

3.03 PANEL POWER SUPPLY

Power supply and conditioning equipment shall be mounted and connected in compliance with the manufacturer's instructions.

Line side disconnect switches shall be provided for power supply and conditioning equipment. Line and load side overcurrent protection shall be provided for power supply and conditioning equipment in compliance with NFPA 70. Disconnect switches shall comply with Section 16175.

Small power supply and conditioning equipment may be mounted in the panel served. Larger units shall be mounted adjacent to the equipment served. Where unconditioned power is brought into control panels, it shall be enclosed in metallic raceways within the panel.

Power supply and conditioning equipment larger than 5 kVA load capacity supported from surfaces other than concrete shall be provided with sound isolators.

Final raceway connections shall be a flexible conduit in compliance with Division 16.

3.04 FACTORY TESTING

The control panel shall be assembled, interconnected, and functionally tested at the assembly shop prior to shipment. The Owner/Engineer shall have the option of witnessing the functional shop test. The Contractor shall notify the Owner/Engineer at least two (2) weeks in advance prior of the scheduled functional shop test.

3.05 FIELD TESTING

Field verify the following for Instrument and Control Panels:

10. Control circuits grounded with one terminal of each load device connected to the grounded conductor.

11. Control contacts installed in the ungrounded side of the circuit.

12. Signal and control wiring installed in separate wireways.

13. Barriers between the power wiring and the signal and control wiring.

14. Connected to the plant grounding system, as specified.

15. Center-line of wall-mounted panels shall be 48 inches above the floor.

16. Inner door contains a copy of the Record elementary and wiring diagrams.

17. Inner door contains a protected drawing holder.

18. Drawings enclosed in a transparent, protective jacket.

19. Functions as specified.

20. Mounted with stainless steel unistrut, fittings, and fasteners.

21. Tested in accordance with Section 16030 and Section 17030.

END OF SECTION

SECTION 17121

DATA CABLING SYSTEM

PART 1--GENERAL

1.01 GENERAL REQUIREMENTS

This section specifies requirements for indoor/outdoor rated fiberoptic data cables, installation, terminations, termination cabinets, test, testing, and miscellaneous accessories. The Contractor shall provide all tools, supplies, materials, equipment, and all labor necessary for the construction, installation, and testing of a complete and operable fiberoptic cabling system.

1.02 QUALITY ASSURANCE

A. MANUFACTURER:

Equipment and cabling provided under this section shall be the product of firms regularly engaged in the design and manufacturer of such equipment and cables for a minimum of five years. Manufacturer shall have minimum of seven years experience and shall be ISO 9001 certified.

B. INSTALLER:

Installation, calibration and testing of equipment furnished under this section shall be performed by skilled, technicians, meeting the certification requirements contained in paragraph 17000-1.02 B., and who are regularly engaged in such activities involving systems of similar complexity. Installers shall also possess any licenses and certificates required to perform such work by the local authority having jurisdiction.

C. REFERENCES:

Unless otherwise specified, references to documents shall mean the documents in effect at the time of Advertisement for Bids or Invitation to Bid (or on the effective date of the Agreement if there were no Bids). If referenced documents have been discontinued by the issuing organization, references to those documents shall mean the replacement documents issued or otherwise identified by that organization or, if there are no replacement documents, the last version of the document before it was discontinued. Where document dates are given in the following listing, references to those documents shall mean the specific document version associated with that date, regardless of whether the document has been superseded by a version with a later date, discontinued or replaced.

Reference	Title
BELLCORE GR-20-CORE	Generic Requirements for Optical Fiber and Optical Fiber Cables
BELLCORE GR-409-CORE	Generic Requirements for Intrabuilding Fiber Cable
ISO-9001	Quality Management Systems
ITU-T G.652	Characteristics of a single-mode optical fiber and cable
TIA/EIA-455-86	FOTP-86 Fiber Optic Cable Jacket Shrinkage
TIA/EIA-455-107A	FOTP-107 Determination of Component Reflectance or Link/System Return Loss Using a Loss Test Set
TIA/EIA-492AAAC	Detail Specification for 850 nm Laser-Optimized, 62.5μm Core Diameter/125 μm Cladding Diameter Class Ia Graded-Index Multimode Optical Fibers
TIA/EIA-598-A	Optical Fiber Cable Color Coding

D. FACTORY TEST:

Manufacturer's factory testing shall be conducted for all fiber optic cable reels provided for this Contract. Test documentation shall include the following:

1. Optical Time Domain Reflectometer (OTDR) measurement of fiber length.

2. OTDR measurement of average attenuation at both 850 and 1300 nm.

3. Traces of all OTDR measurements taken.

4. Visual Tracer for short distance cable fault detection.

1.03 SUBMITTALS

The following information shall be submitted for review in accordance with Section 01300:

1. A copy of this specification section, with addendum updates included, and all referenced and applicable sections, with addendum updates included, with each paragraph check-marked to indicate specification compliance or marked to indicate requested deviations from specification requirements. Check marks (✓) shall denote full compliance with a paragraph as a whole. If deviations from the specifications are indicated, and therefore requested by the Contractor, each deviation shall be underlined and denoted by a number in the margin to the right of the identified paragraph, referenced to a detailed written explanation of the reasons for requesting the deviation. The Engineer shall be the final

authority for determining acceptability of requested deviations. The remaining portions of the paragraph not underlined will signify compliance on the part of the Contractor with the specifications. ***Failure to include a copy of the marked-up specification sections, along with justification(s) for any requested deviations to the specification requirements, with the submittal shall be sufficient cause for rejection of the entire submittal with no further consideration.***

2. A copy of the contract document, fiber-optic network system block diagrams, cabinet and panel drawings, control diagrams and process and instrumentation diagrams that apply to the equipment in this section marked to show specific changes necessary for the supplied equipment. If no changes are required, the drawings shall be marked "*No Changes Required."* Manufacturer's specifications, data sheets, and catalog literature for the indoor/outdoor rated fiber optic cable that clearly and unambiguously shows that the cable meets all the requirements specified herein.

3. Cable manufacturer's testing documentation for all cables shipped to the job site. Documentation shall include the reel number and as a minimum for each fiber in each cable the following data:

4. Manufacturer's catalog literature and catalog data sheets for the following items:

    a. Fiber optic cables
    b. Fiber optic cable termination connectors
    c. Fiber optic patch cords
    d. Fiber optic termination panels
    e. Fiber optic adapter plug-in
    f. Fiber optic patch cord storage
    g. Fiber optic cable clamp kit
    h. Connector/Adapter cleaning kit
    i. Inner duct and its accessories
    j. Protective tubing for fiber optic patch cords
    k. Cable pulling grips, swivel and lubricant

5. Shop drawings

    a. Termination panel fabrication and layout drawings with complete list of materials and nameplate engraving list.
    b. Interconnection cable diagrams for the complete system, showing each fiber in each cable. Each termination point shall be clearly marked.

6. Factory test results.

7. Spare parts as required below.

8. Contractor's experience resume for all personnel installing the fiber optic system on this job, including factory certifications.

PART 2--PRODUCTS

2.01 MANUFACTURER

Fiber optic cables shall be as manufactured by Optical Cable Corporation, as follows:

1. Indoor/outdoor multimode fiber optic cable.

2. Patch cords.

   a. Simplex multimode, 4 feet
   b. Duplex multimode, 4 feet

3. Connectors/Couplings shall be Unicam-type connectors manufactured Corning. Connectors shall have ceramic ferrules.

4. Field Fiber Enclosure shall be NEMA 12 enclosures.

2.02 FIBER OPTIC CABLES

A. GENERAL:

Fiber optic cables shall be outdoor plant rated cables in accordance with GR-20-CORE.

B. CABLE FIBER COUNT:

The fiber optic cable shall be composed of multimode fibers as shown on the drawings or as noted.

C. CABLE CONSTRUCTION:

1. GENERAL: The fiber optic cables shall be rated outdoor and shall be a composite multimode central filled core, dielectric sheath, style cable. The cable shall be an assembly consisting of a central tube containing tight-buffered optical fibers, water-absorbent polymer-coated aramid yarn strength member, plastic rod fillers, and a UL-listed outdoor/indoor rated black-colored outer PVC jacket. PVC jacket shall have UV inhibitors for sunlight exposure. Colored fibers shall be 900 micron diameter and assembled in 12 fiber sub-units.

2. STRENGTH MEMBER: The central buffer tube that is strengthened with aramid yarn.

3. FIBER OPTIC BUFFERED CABLES: All fiber optic buffered cables shall be constructed using high performance 62.5/125 μm multimode optical fibers in accordance with TIA/EIA 492AAAC. Each optical fiber shall be tight buffered to PVC at a thickness of 900 μm diameter, nominal. The PVC tight buffers shall be color coded in accordance with TIA/EIA 598-

A. Each optical fiber shall conform to Bellcore GR-409 CORE strip force testing for both the coated fiber and the tight buffer. There shall be no gaps between the coating material and the tight buffer material visible under a 50x-power microscope.

4. OUTER CABLE JACKET: The outer cable jacket shall meet all requirements of the NEC for use in all outdoor areas (including plenums) without being enclosed in conduit. The outer jacket shall be black polyvinylchloride (PVC). The outer jacket shall be extruded directly over the outer layer of the stranded cable core, with no tape separators allowed. The outer jacket shall be smooth and free from holes, splits, blisters, and other surface flaws. A non-wicking polyester yarn ripcord shall be incorporated under the cable jacket for jacket removal. Cable jacket shrinkage test shall measure the shrinkage or expansion of a cable jacket exposed to temperature aging. Maximum shrinkage shall be less than 5 percent for each specimen tested per the test procedure described in TIA/EIA 455-86.

5. CABLE MARKING: The outer jacket shall be surface printed with the manufacturer's identification, date of manufacture, manufacturer's part number, sequential 2-foot marks and required UL marking.

D. MULTIMODE (MM) FIBER CHARACTERISTICS:

The multimode fiber shall meet the requirements of FDDI and shall have the following specifications:

Fiber Type:	Multimode
Core Diameter:	62.5 ± 2.5 μm
Cladding Diameter:	125.0 ± 1.0 μm
Core/Cladding Concentricity Error:	≤ 1.5 μm
Cladding Non-Circularity:	< 1.0%
Core Non-Circularity:	≤ 5.0%
Colored Coating Diameter:	254 ± 7 μm
Numerical Aperture:	0.200 ± 0.015/-0.010
Maximum Attenuation:	3.00 dB/km @ 850 Nm
(Dual window)	1.00 dB/km @ 1300 Nm
Minimum Bandwidth:	2000 MHz-km @ 850 Nm
(Dual Window)	500 MHz-km @ 1300 Nm

E. ADDITIONAL REQUIREMENTS:

The cable shall be packaged on a reel with inner hub diameter greater than the recommended minimum bending diameter of the cable.

The reel shall bear the name of the manufacturer, date of manufacture, the cable identification number, UL label, and the total length of cable on the reel. The ends of all cable shall be sealed to prevent the entry of moisture during shipping, handling, storage, and installation.

2.03 FIBER OPTIC BUFFERED CABLE CONNECTORS AND PATCH CORDS

A. GENERAL:

Fiber optic cable connections shall be Unicam-type, with ceramic ferrules. Kit shall contain all necessary items to prepare the connections and perform the polishing such as connectors, hardware, tools, cleaving tool, continuity tester, visual fault locator, and other supplies necessary for installation of connectors. All singlemode terminations shall be the SC type, all multimode terminations shall be ST type. Fusion-spliced pigtails are not acceptable.

B. CONNECTOR CHARACTERISTICS:

Connectors shall be specifically designed for 125 μm cladded multimode (MM) fiber optic buffered cables specified herein. Connectors shall be rated for a maximum insertion loss of 0.30 dB and have a reflectance of less than -40 dB in accordance with FOTP-107. All connectors shall be fabricated using oven heat cured epoxy method. Ambient cured or UV cured epoxy methods are not acceptable.

C. PATCH CORD CHARACTERISTICS:

Patch cords shall be 3.0 mm single 250 μm coated fiber with jacket and connectors on both ends. Attenuation shall be a maximum of 0.3 dB per mated connector.

2.04 FIBER OPTIC PANELS

A. GENERAL:

Fiber optic patch panels shall consist of a system of components for routing, supporting, and terminating the fiber optic cables specified herein. The system shall consist of rack modules, mounting hardware, cable clamps and grommets, cable routers, storage decks, connector racks, and all other items for a complete system as shown on the drawings and specified herein.

B. DESCRIPTION:

Fiber optic patch panels shall be wall-mounted type fiber optic patch panels, constructed of aluminum or steel, and shall be equipped with removable and hinged metal doors, slide rails that permit the patch panel to slide in and out of the unit while being fully supported. The patch panel shall be 1U or 2U high and shall include a machine printed port labeling system. Provide cable routers and storage decks to retain cables' minimum bending radius. Provide sufficient quantity and type of ports to terminate the number of fiber strands shown on the drawings, and blank covers for unused port spaces. Panels shall be equipped with one port for each fiber. Ports shall be in accordance with the specified cable type.

2.05 INNERDUCT

Plenum rated corrugated inner ducts shall be orange colored PVC 1-inch or 1 1/4 inside diameter. Innerduct shall be used in new conduits in which fiberoptic cables are installed and under raised computer floor.

2.06 PRODUCT DATA

The following information shall be provided in accordance with Section 01300:

1. Operation and maintenance (O&M) instructions in accordance with Section 01730 along with a copy of Section 01730 with each paragraph check marked to show compliance. O&M instructions shall be submitted after all submittals specified in paragraph 01733-1.03 above have been returned marked "No Exceptions Taken" or "Make Corrections Noted." O&M instructions shall reflect the approved materials and equipment.

2. Manufacturer's product information.

3. Cable manufacturer's testing documentation for all cables shipped to the job site. Documentation shall include the reel number and as a minimum for each fiber in each cable the following data:

    a. Attenuation at 850 Nm, 1300 Nm, and 1550 Nm, as applicable to multimode and singlemode fibers.

    b. Optical Time Domain Reflectometer (OTDR) traces for each fiber of each reel, measured at 850 Nm, 1300 Nm, and 1550 Nm, as applicable to multimode and singlemode fibers.

4. All fiber optic cable sample test sheets and all test results. The Contractor shall submit test forms for all tests conducted under this contract in accordance with Section 01300. Test forms shall clearly label the test type, the test location, test date, wavelength, index of refraction, cable identification, fiber type, fiber number, fiber color, and location of each reflectivity point, location of each major loss, and the result or the value of the tested parameter. Along with the test forms, the following documents shall be submitted:

    a. Signature from the Client’s representative who witnesses the test.

    b. Signature from the Contractor’s representative who witnesses the test.

    c. Details (such as manufacturer, model number, serial number and calibration expiration date) of test equipment being used.

All OTDR traces and power meter testing results shall be supplied on printed hard copy, and on 5-1/4-inch floppy disk as well as CD-ROM Disc media.

2.07 SPARE PARTS

1. Furnish one multimode 4-foot fiber optic patch cord for every patch panel.
2. Furnish 12 connectors of each type provided.
3. Furnish one TKT-UNICAM-ELITE installation kit.
4. Furnish Ethernet switch of each type.

PART 3--EXECUTION

3.01 FIBER OPTIC CABLE INSTALLATION

The installation of the fiber optic cable shall be performed and supervised by workers each possessing a minimum of 3 years experience in the installation and termination of fiber optic cable systems of the type specified herein. Prior to installation, the Contractor shall perform delivery testing on all fiber optic cables.

Installation shall be in accordance with cable manufacturer's recommendations. At no time shall the cable be placed in a position with a 10-inch or less, 90-degree bend radius. All installation equipment and methods shall be reviewed and approved by the Engineer prior to installation. Contractor shall notify the Engineer 24 hours prior to any fiber optic cable pull. The Engineer will witness all cable pulls unless otherwise advised in the field.

Woven wire grips shall be used to pull the cable. The grips shall have a minimum length of 18 inches and shall be applied to the cable in conformance to the cable manufacturer's standard recommendations.

A nonfreezing type of swivel shall be inserted between the pulling line and cable pulling grip to prevent twisting under strain. The swivel shall be equipped with shear or tension pins with a breaking strength of 600 pounds. No cable shall be pulled without a functional breakaway swivel.

Lubricant shall be poured or pumped into the innerduct at the feed end location. Nominal application rate shall be 3 gallons per 1,000 feet of cable. If the innerduct is open at intermediate locations, then the appropriate proportion of lubricant shall be applied at each opening. As the cable is being pulled, lubricant shall be poured into the innerduct at the feed location and at each intermediate location. Workmen shall be stationed at each intermediate location as required. After cable pulling, all excess lubricant that has collected shall be removed and the surrounding area cleaned.

The cable shall be installed using a hydraulic capstan or winch, equipped with a recording running line dynamometer to measure the pulling tension. The pulling equipment shall have "slip-load" capability to allow the winch to maintain a constant pulling force without taking up the winch line. The pulling equipment shall also be equipped with a hydraulic bypass that shall be set so that a maximum tension of 600 pounds is not exceeded. If at any time the tension reaches 600 pounds during the pulling operation, the pull shall be stopped and the Engineer shall be notified. The difficulty shall be determined and corrected before pulling is

resumed. The dynamometer shall be connected and turned on before any pulling has begun and shall run continuously through the pulling operation.

The cable reel shall be positioned at the feed point in alignment with the raceway and in such a position that the cable can be passed from the top of the reel in a long, smooth bend into the raceway system. The use of a cable feeder is required.

The Contractor shall supply all bull wheels, blocks, split wheels, cable feeders, and necessary equipment required to provide a clean and safe operation. The cable shall not be allowed to travel over any wheel or block that has a radius less than the minimum radius allowed by the cable manufacturer.

The use of snatch blocks and rollers to guide the cable into the conduit at the feed point shall be minimized. The cable shall be fed slack by hand into the feed point and raceway without the use of rollers wherever possible. The cable reel shall be tended at all times and shall be turned by hand to provide the required cable slack. Under no circumstances shall the cable tension be allowed to turn the cable reel. A rim roller, with a wheel radius greater than the minimum cable bending radius shall be placed at the manhole or vault opening to prevent the cable from dragging on the manhole rim or steps.

A thorough visual inspection for flaws, breaks, or abrasions in the cable sheath shall be made as the cable leaves the reel, and the pulling speed shall be slow enough to permit this inspection. Damage to the sheath or finish of the cable shall be sufficient cause for rejecting the cable. Cable damaged in any way during installation shall be replaced at no additional cost to the Client. During installation, the cable shall be subject to continual inspection by the Engineer.

If the cable becomes damaged during installation, the Contractor shall stop cable installation and notify the Engineer immediately. The Engineer will determine whether to replace the entire reel of cable or to install a termination panel to eliminate the damaged section.

All fiber optic cables should be placed inside their appropriate innerduct, as specified in Cable Schedule or shown on the drawings.

A minimum of 30 feet fiber optic cable service loop shall be used at each end of termination.

Cable ends shall be sealed with temporary caps during installation, up to the time when they are terminated.

Each end of the cable shall be clearly labeled.

3.02 FIBER TERMINATIONS

If epoxy-type fiberoptic connectors are used, each connector shall be finished with an automatic polishing machine.

Active and spare fiber optic cables shall be provided and installed with all required connectors and appurtenances for all data links. All multimode terminations shall be ST type, all singlemode terminations shall be SC type.

3.03 FIELD TESTS

A. GENERAL:

The Contractor shall perform field tests on each fiber of each cable installed in accordance with this Section. Equipment necessary to perform this test shall be provided and operated by the Contractor. All fibers shall be tested for breaks, abnormalities, and overall attenuation characteristics to ensure that the cable system meets the attenuation specifications specified herein. An Owner's representative shall witness all testing and final checkout of the fiber optic system to determine fiber-optic cable system acceptability. The Contractor shall submit all the above test results in accordance with paragraph 17121-1.03.

B. TEST EQUIPMENT:

All test equipment used shall have a calibration sticker indicating the equipment has been calibrated within the preceding 6 months and all other requirements in accordance with Section 01660.

C. DELIVERY TEST:

After delivery to the site, before the cable is installed, the Contractor shall generate an end-to-end OTDR trace for each multimode (MM) fiber at 850 and 1300 NM wavelengths, using the proper index of refraction for that fiber. A 1-kilometer backscatter suppression fiber shall be used, along with a splice index-matching gel. These traces shall also identify the total optical length. An average optical attenuation measurement (dB/km) shall be made for each fiber at both 1310/ 1550 Nm wavelengths (SM), and 850/1300 Nm wavelengths (MM) with an OTDR. Each measurement shall be captured on a trace.

An Owner's representative shall witness all pre-installation testing. All test documentation shall be turned over to the Client within 5 days after the delivery test. If any cable is found to not meet the performance levels of the manufacturer's factory tests, the Contractor shall have that cable replaced by the manufacturer at no additional cost to the Client or change in the completion schedule.

D. OTDR TESTING:

Each optical fiber shall be tested end-to-end for each installed span after cable installation. For each optical fiber, an end-to-end OTDR trace shall be made at both 1310/1500 Nm wavelengths (SM), and 850/1310 Nm wavelengths (MM) and shall show total optical length. This testing shall be conducted from both ends of the fiber. For OTDR testing, a 1-kilometer backscatter suppression fiber shall be used. For each installed multimode (MM) optical fiber, the measured optical power loss in dB shall not exceed the following:

1. Measured loss less than: (0.0030)L + (0.30)N + (0.4)C + 3.00 dB (for 850 nm)

2. Measured loss less than: (0.0010)L + (0.30)N + (0.4)C + 1.00 dB (for 1300 nm)

Any installed fiber optic cables containing one or more fibers not meeting the specified insertion loss above will not be accepted and shall be repaired or replaced at no additional cost to the Client.

E. END-TO-END ATTENUATION TESTING:

Each optical fiber shall be tested for end-to-end attenuation after the cable is installed. The attenuation test shall utilize a stabilized optical source and power meter. The test shall be conducted per EIA Fiber Optic Test Procedure (FOTP) No. 171 Method "B." For each fiber, after the reference measurement is taken, perform three tests in one direction, reverse the test equipment and perform three tests in the opposite direction. The measured loss of the fiber under test is the value of the reference measurement, minus the algebraic average of the six separate measurements. Any installed fiber optic cables containing one or more fibers not meeting the specified optical power loss above will not be accepted and shall be repaired or replaced at no additional cost to the Client.

3.04 OPTICAL PATHS FOR EQUIPMENT COMMUNICATION

The Contractor is responsible for all patch cords connecting the termination panels to the supplied equipment. Protective tubing shall be used to protect all the supplied fiber optic patch cords. Only factory manufactured patch cords in accordance with paragraph 17121-2.02 are acceptable. The Client will assign the final port locations for these patch cords.

The Contractor shall perform OTDR testing and power meter testing for the assigned optical paths. These optical paths may partially consist of the Client’s existing fiber optic cable system.

3.05 TEST RESULTS

Compile all of the test results into a single folder, and submit to the Client for information.

3.06 PATCH PANEL INSTALLATION

Patch panels shall be installed in accordance with the manufacturer's instructions. The mounting bolt seismic calculations required per Section 17000 shall be approved prior to their installation.

3.07 INNER-DUCT INSTALLATION

Non-corrugated innerducts shall be placed inside the assigned conduits (above 2-inch diameter) within the duct bank according to the design documents. Spare innerducts shall be placed at the same time to fill up the whole conduits.

Duct banks for fiber optic cables without any innerduct entering buildings and all other structures from manholes and handholes shall be sealed watertight after cable installation.

Innerducts shall be used to protect any exposed fiber optic cables inside the handholes, manholes and pull boxes. Plenum rated innerduct shall be used to protect the fiber optic cable and patch cords in areas where the cable may be subjected to physical damage, such as in panel rooms, or electric rooms.

END OF SECTION

SECTION 17130

POWER SUPPLY AND CONDITIONING EQUIPMENT

PART 1--GENERAL

1.01 DESCRIPTION

This section specifies requirements for power supply and conditioning equipment required to support the instrumentation and communication systems specified.

1.02 REFERENCES

This section contains references to the following documents. They are a part of this section as specified and modified. Where a referenced document contains references to other standards, those documents are included as references under this section as if referenced directly. In the event of conflict between the requirements of this section and those of the listed documents, the requirements of this section shall prevail.

Unless otherwise specified, references to documents shall mean the documents in effect at the time of Advertisement for Bids or Invitation to Bid (or on the effective date of the Agreement if there were no Bids). If referenced documents have been discontinued by the issuing organization, references to those documents shall mean the replacement documents issued or otherwise identified by that organization or, if there are no replacement documents, the last version of the document before it was discontinued. Where document dates are given in the following listing, references to those documents shall mean the specific document version associated with that date, regardless of whether the document has been superseded by a version with a later date, discontinued or replaced.

Reference	Title
NEMA 250	Enclosures for Electrical Equipment
NFPA 70	National Electrical Code (NEC)
UL 1012	Power Supplies

1.03 PLANT ELECTRICAL SUPPLY SYSTEM

Electric power for instrumentation and communication systems shall be obtained from the power distribution system specified in Division 16. This power is not regulated, wave forms may be distorted, and significant amounts of electrical noise may be present. The Contractor shall provide all necessary power supply and conditioning equipment to provide electrical power of the required voltages and current capacities and of adequate quality to ensure reliable operation of the instrumentation and communication systems. Unless otherwise specified, the Contractor shall assume that the power supply for instrumentation systems is 120 volts plus or minus 15 percent, 60 hertz plus or minus 3 hertz, 5 percent maximum harmonic distortion.

PART 2--PRODUCTS

2.01 GENERAL

Except for power supply units which form an integral part of an individual piece of equipment, all power supply and conditioning equipment shall comply with UL 1012 and shall be approved by UL, CSA, or FM for the application. All power supply equipment shall be provided in redundant configurations such that failure of a single unit will not disable all or any part of the instrumentation and communication systems. Diode isolation shall be provided for redundant direct current supply units, and the power supply negative output terminal shall be grounded.

2.02 ALTERNATING CURRENT (AC) VOLTAGE REGULATORS

Regulators shall be of the solid-state tap-changing type, insensitive to line frequency variations between 47 and 63 hertz. Ferroresonant units are not acceptable. Output regulation for input voltage variation from 85 to 125 volts shall not exceed 3.3 percent. Output regulation for load variation from 0 to 100 percent shall not exceed 1.0 percent. Response time shall be 1.0 cycles or less. Voltage regulators serving panelboards and control panels shall have a load capacity not less than 200 percent of the connected load. Voltage regulators serving individual instruments shall have a load capacity not less than 125 percent of the connected load. Power loss in the regulator shall not exceed 2 percent of the regulator capacity, and harmonic distortion introduced by the regulator shall not exceed 0.1 percent. Regulator output shall be fully protected against internal faults, external overloads and short circuits. Three-phase units shall be 4-wire, wye-connected and capable of supporting 100 percent unbalanced load. Regulators shall be Topaz 73000 series, or equal.

2.03 NOISE-SUPPRESSION ISOLATION TRANSFORMERS

Isolation transformers shall be provided for AC powered instrumentation loads containing solid state circuitry where such is not included within the instrument. Isolation transformers shall be of the triple box shield type. Each coil shall be completely enclosed in a grounded conductive faraday shield, and the overall transformer enclosed in a faraday shield. Common mode noise attenuation between primary and secondary shall exceed 140 dB at 1.0 kHz. Isolation transformer dielectric strength shall be 2500 volts minimum. Isolation transformers serving panelboards and control panels shall have a load capacity not less than 200 percent of the connected load. Isolation transformers serving individual instruments shall have a load capacity not less than 125 percent of the connected load. Power loss in the isolation transformer shall not exceed 2.0 percent of the maximum load rating. Harmonic distortion introduced by the isolation transformer shall not exceed 0.1 percent. Three-phase units shall be 4-wire, wye-connected and capable of supporting 100 percent unbalanced load. Isolation transformers shall be Topaz series or equal.

2.04 DIRECT-CURRENT POWER SUPPLIES

Direct-current supplies for bulk 24-volt nominal instrumentation power shall be convection-cooled switching type. Line regulation shall be 0.4 percent for line variations from 105 to 132 volts, and load regulation shall be 0.4 percent for load variations from 0 to full load. Ripple and noise shall not exceed 100 mV peak-to-peak. Hold-up time at maximum load shall be not less than 16 milliseconds. Efficiency shall be better than 70 percent. Power supply shall be rated for continuous duty from 0 to 50 degrees C at rated load. Output shall be electronically current limited,

and overvoltage crowbar shutdown shall be provided. Power supply output voltage shall be rated 28 volts DC, adjustable plus or minus 5 percent, and shall be set to provide 26.4 volts on the panel direct current bus. Power supplies shall be Lambda LJA series, or equal.

2.05 UNINTERRUPTIBLE POWER SYSTEM (UPS)

A. GENERAL:

This paragraph specifies requirements for uninterruptible power supply (UPS) systems consisting of a battery charger, battery, rectifier inverter, and bypass line transfer switch. The uninterruptible power supply shall be a continuous on-line, double conversion, computer-grade system with isolated neutral. The uninterruptible power supply system shall use a ferro-resonant transformer to provide isolation and power conditioning under normal operation. When power the fails, an inverter shall provide AC power from batteries through the transformer to provide continuous uninterrupted power. Uninterruptible power supply systems shall be as manufactured by Best Power Technology, Inc., Necedah, American Power Conversion, Wisconsin.

B. SYSTEM PERFORMANCE:

The UPS shall be completely isolated from the incoming 120 Vac power with less than 2 pf of effective capacitance. It shall qualify as a separately derived power source per NEC article 250-5D. The unit shall suppress surges as described by IEEE 587A and B to safe levels. Output voltage regulation shall be ±3 percent maximum single harmonic and 5 percent total harmonic distortion at 120 Vac. Frequency distortion shall not exceed ±0.5 hertz. Operating condition shall be 0 to 40 degrees C at 95 percent relative humidity, noncondensing.

The system shall be monitored by a microprocessor with an RS-232 port allowing remote monitoring of the UPS internal alarms. LED indicators shall be provided on the front of the cabinet for systems status and alarms.

The UPS shall provide continuous unity power factor with no interruption from line to inverter and return. The UPS shall be capable of delivering 125 percent of rated capacity for 10 minutes and shall have a surge capability of 150 percent.

C. BATTERY:

Batteries shall be maintenance-free, sealed type, installed in cabinet.

D. BATTERY CHARGER:

The battery charger shall be the constant voltage type and shall provide equalization capability with a manually initiated timer.

E. TRANSFER SWITCH:

No-break transfer line to inverter and return.

F. INVERTER:

The inverter system shall be low frequency pulse width modulated type using power MOSFETS.

2.06 SURGE PROTECTION

Surge arrestors and capacitors shall be provided on the primary winding of isolation transformers supplying power to solid state systems. Surge protectors shall be mounted in a separate , NEMA 1 enclosure adjacent to the transformer and the incoming line passed through this enclosure. Surge arrestors shall be General Electric 9L15EC or equal. Surge capacitors shall be General Electric 9L18B, or equal.

2.07 PRODUCT DATA

The following data shall be provided in accordance with Section 01300:

1. Catalog data including performance parameters.

2. Wiring diagrams.

3. Applicable operation and maintenance information as specified in Section 01730.

PART 3--EXECUTION

Power supply and conditioning equipment shall be mounted and connected in compliance with the manufacturer's instructions unless otherwise specified. Line side disconnect switches shall be provided for power supply and conditioning equipment. Line and load side overcurrent protection shall be provided for power supply and conditioning equipment in compliance with NFPA 70. Disconnect switches shall comply with Section 16175.

Small power supply and conditioning equipment may be mounted in the panel served. Larger units shall be mounted adjacent to the equipment served. Where unconditioned power is brought into control panels, it shall be enclosed in metallic raceways within the panel.

Power supply and conditioning equipment larger than 5 KVA load capacity supported from surfaces other than concrete shall be provided with sound isolators. Final raceway connections shall be a flexible conduit in compliance with Section 16110.

Power supply and conditioning equipment not designed for exposed mounting shall be housed in panels in compliance with Section 17110.

END OF SECTION

SECTION 17200

INSTRUMENT INDEX

PART 1--GENERAL

1.01 DESCRIPTION

A. SCOPE:

This section specifies the Instrument Index and general requirements applicable to process instrumentation and analyzer systems consisting of process sensors, process indicators, signal conditioning module, control and monitoring devices, transmitters, and accessories.

The Contractor shall provide, calibrate, and test the complete process instrumentation and analyzer systems and place in operation and test the system. Testing includes tuning loops and making final adjustments to instruments and analyzers during facility start-up.

The Contactor shall provide the services of certified instrument technicians for testing and adjustment activities as specified in Section 17000.

The Contractor shall examine the mechanical drawings and specifications to determine actual locations, sizes, materials and ratings of process connections. Process taps shall be indicated on pipe shop drawings as specified in paragraph 15050-2.04.

1.02 REFERENCES

Refer to Section 17000 – General Requirements for Instrumentation and Control.

Refer to Section 17030 – Process Instrumentation and Control System Testing.

1.03 SUBMITTALS

Refer to Sections 17000 and 17030.

PART 2--PRODUCTS

2.01 INSTRUMENT INDEX

The Instrument Index, paragraph 17200-3.03, lists instruments and analyzers required for the project. Instrument functions specified on this list shall be provided by the Contractor.

Additional instrumentation devices such as process taps, seals, and other items required to complete the instrument loops due to characteristics of the equipment selected by the Contractor and not specified in the instrument index or on the contract drawings shall be provided at no additional cost to provide a complete working system.

PART 3--EXECUTION

3.01 GENERAL REQUIREMENTS

Materials, equipment, and installation shall be tested and inspected per Sections 17000, 17030, and this section.

Provide buffer solutions and reference fluids for analytical equipment test procedures.

3.02 INSTALLED EQUIPMENT - TESTS AND INSPECTION

Refer to Section 17030 – Process Instrumentation and Control System Testing.

3.03 INSTRUMENT INDEX

The following is an index of the instrumentation equipment, analyzers, and devices.

A. DESCRIPTION OF HEADINGS:

1. TAG NUMBER: Tag Number appears as a heading (PREFIX and NUMBER) and consists of a two, three or four letter prefix indicating the instrument function followed by a number identifying the process loop with which the instrument is associated. Tag Number provides an identification of the instrument, analyzer, or device.

2. DESCRIPTION: Provides the functional description of the instrument, analyzer, or device.

3. P&ID NUMBER: Lists the Process and Instrumentation Diagram on which the instrument, analyzer, or device appears.

4. SPECIFICATION: Provides the specification reference and “INSTRUSPEC” designation for the instrument, analyzer, or device.

5. SIZE: Provides the application data relative to sizing the instrument; flow tube diameter, probe length, associated pipe sizes, etc.

6. RANGE: Provides the calibrated instrument range for each application.

7. SETPOINT: Provides the calibrated switch setpoint.

8. COMMENTS: Provides the features, interlocks, and information applicable to the instrument, analyzer, or device.

TAG NO.	DESCRIPTION	P&ID	SPEC	RANGE	SETPOINT	COMMENTS
LSH-1010	INFLUENT MANHOLE HIGH LEVEL FLOAT	20-I-601	17216-LFS	NA		

TAG NO.	DESCRIPTION	P&ID	SPEC	RANGE	SETPOINT	COMMENTS
LDIT-2011	COARSE SCREEN 1 LEVEL INDICATOR TRANSMITTER	20-I-601	17212-LUT	0 – 9 ft	NA	
LSHH-2011	COARSE SCREEN 1 HIGH LEVEL SWITCH	20-I-601	17216-LFS	NA		
LDIT-2012	COARSE SCREEN 2 LEVEL INDICATOR TRANSMITTER	20-I-601	17212-LUT	0 – 9 ft	NA	
LSHH-2012	COARSE SCREEN 2 HIGH LEVEL SWITCH	20-I-601	17216-LFS	NA		
FIT-2010	COARSE SCREEN PARSHALL FLUME LEVEL INDICATOR TRANSMITTER	20-I-601	17212-LUT	0 – 10 mgd	NA	
AIT-2010	COARSE SCREEN COMBUSTIBLE GAS DETECTOR	20-I-601	17510-MI	0 – 100% LEL	NA	
LSHH-2020	INFLUENT PUMPING STATION LEVEL SWITCH HIGH HIGH	20-I-602	17216-LFS	NA		
LIT-2020-1	INFLUENT PUMPING STATION LEVEL INDICATOR TRANSMITTER	20-I-602	17212-LST2	0 – 25 ft	NA	
PI-2021	INFLUENT PUMP 1 PRESSURE INDICATOR	20-I-602	17211-PG	0 – 30 psi	NA	
PI-2022	INFLUENT PUMP 2 PRESSURE INDICATOR	20-I-602	17211-PG	0 – 30 psi	NA	
PI-2023	INFLUENT PUMP 3 PRESSURE INDICATOR	20-I-602	17211-PG	0 – 30 psi	NA	
PI-2024	INFLUENT PUMP 4 PRESSURE INDICATOR	20-I-602	17211-PG	0 – 30 psi	NA	
LIT-2020-2	INFLUENT PUMPING STATION LEVEL INDICATOR TRANSMITTER	20-I-602	17212-LST2	0 – 25 ft	NA	
PIT-2025	INFLUENT PUMPING STATION PRESSURE INDICATOR TRANSMITTER	20-I-602	17212-PGT	0 – 30 psi	NA	
FIT-2025	INFLUENT PUMPING STATION FLOW INDICATOR TRANSMITTER	20-I-602	17212-FM	0 – 10 mgd	NA	
LSHH-2025	INFLUENT PUMPING STATION LEVEL SWITCH HIGH HIGH	20-I-602	17216-LFS	NA		
PI-2030-1	VORTEX GRIT REMOVAL 3W PRESSURE INDICATOR	20-I-603	17211-PG	0 – 150 psi	NA	
PI-2030-2	VORTEX GRIT REMOVAL SEAL WATER PRESSURE INDICATOR	20-I-603	17211-PG	0 – 150 psi	NA	
FSL-2031	GRIT PUMP 1 SEAL WATER FLOW SWITCH	20-I-603	17211-FTS	NA		
PI-2031-1	GRIT PUMP 1 SUCTION PRESSURE INDICATOR	20-I-603	17211-PG	0 – 30 psi	NA	
PI-2031-2	GRIT PUMP 1 DISCHARGE PRESSURE INDICATOR	20-I-603	17211-PG	0 – 30 psi	NA	
PSL-2031	GRIT PUMP 1 SUCTION LOW PRESSURE SWITCH	20-I-603	17211-PLS			

TAG NO.	DESCRIPTION	P&ID	SPEC	RANGE	SETPOINT	COMMENTS
PSH-2031	GRIT PUMP 1 DISCHARGE PRESSURE INDICATOR	20-I-603	17211-PS			
PI-2032-1	GRIT PUMP 2 SUCTION PRESSURE INDICATOR	20-I-603	17211-PG	0 – 30 psi	NA	
PI-2032-2	GRIT PUMP 2 DISCHARGE PRESSURE INDICATOR	20-I-603	17211-PG	0 – 30 psi	NA	
PSL-2032	GRIT PUMP 2 SUCTION LOW PRESSURE SWITCH	20-I-603	17211-PLS			
PSH-2032	GRIT PUMP 2 DISCHARGE PRESSURE INDICATOR	20-I-603	17211-PS			
PI-2040	FINE SCREEN 3W PRESSURE INDICATOR	20-I-604	17211-PG	0 – 200 psi	NA	
LSH-2060	BIOLOGICAL BASIN SPLITTER BOX HIGH LEVEL SWITCH	20-I-606	17211-LFS			
FIT-2110	ODOR CONTROL HEADWORKS CARBIN UNIT FLOW INDICATOR TRANSMITTER	21-I-601	17212-FTD	0 – 40,000 cfm	NA	
PDIT-2110	ODOR CONTROL GREASE FILTER DIFFERENTIAL PRESSURE TRANSMITTER	21-I-601	17212-PDT	0 - 3 in w.c.	NA	
PI-2112-1	ODOR CONTROL HEADWORKS CARBIN UNIT PREESURE INDICATOR 1	21-I-601	17211-PG	(-6) – 0 in w.c.	NA	
PI-2112-2	ODOR CONTROL HEADWORKS CARBIN UNIT PRESSURE INDICATOR 2	21-I-601	17211-PG	0 - 20 in w.c.	NA	
PDIT-2112	ODOR CONTROL CARBON UNIT DIFFERENTIAL PRESSURE INDICATOR	21-I-601	17212-PDT	Vendor Provided	NA	
FSL-2121	HEADWORKS AREA FLOW SWITCH LOW 1	21-I-602	17216-FTS	NA		
FSL-2122	HEADWORKS AREA FLOW SWITCH LOW 2	21-I-602	17216-FTS	NA		
TIT-2120	HEADWORKS AREA TEMPERTURE INDICATOR TRANSMITTER	21-I-602	17212-TMP	0 – 120 F	NA	
XE-2120	HEADWORKS AREA SMOKE DETECTOR	21-I-602				
FIT-2131	ODOR CONTROL MEMBRANE AREA FLOW INDICATOR TRANSMITTER	21-I-603	17212-FTD	0 – 30,000 cfm	NA	
PI-2131-1	ODOR CONTROL MEMBRANE AREA PRESSURE INDICATOR	21-I-603	17211-PG	(-6) – 0 in w.c.	NA	
PI-2131-2	ODOR CONTROL MEMBRANE AREA PRESSURE INDICATOR	21-I-603	17211-PG	0 - 20 in w.c.	NA	
PDIT-2131	ODOR CONTROL CARBON UNIT DIFFERENTIAL PRESSURE INDICATOR TRANSMITTER	21-I-603	17212-PDT	0 - 3 in w.c.	NA	

TAG NO.	DESCRIPTION	P&ID	SPEC	RANGE	SETPOINT	COMMENTS
PDIT-2133	ODOR CONTROL CARBON UNIT DIFFERENTIAL PRESSURE INDICATOR TRANSMITTER	21-I-603	17212-PDT	0 - 3 in w.c.	NA	
AIT-3011	FERMENTATION TANK 1-1 PH TRANSMITTER	30-I-601	17215-AH	0 - 14	NA	
AIT-3011	FERMENTATION TANK 1-1 ORP TRANSMITTER	30-I-601	17215-AOR	-1500 – 1500 mV	NA	
FIT-3014-1	BIOLOGICAL BASIN TANK 1-1 FLOW INDICATOR TRANSMITTER	30-I-601	17212-FTD	0 – 6000 cfm		
AIT-3014-1	BIOLOGICAL BASIN TANK 1-1 DISSOLVED OXYGGEN TRANSMITTER	30-I-601	17215-ADO	0 – 5 ppm	NA	
FIT-3014-2	BIOLOGICAL BASIN TANK 1-2 FLOW INDICATOR TRANSMITTER	30-I-601	17212-FTD	0 – 6000 cfm		
AIT-3014-2	BIOLOGICAL BASIN TANK 1-2 DISSOLVED OXYGGEN TRANSMITTER	30-I-601	17215-ADO	0 – 5 ppm	NA	
FIT-3014-3	BIOLOGICAL BASIN TANK 1-3FLOW INDICATOR TRANSMITTER	30-I-601	17212-FTD	0 – 6000 cfm		
FIT-3014-4	BIOLOGICAL BASIN TANK 1-4 FLOW INDICATOR TRANSMITTER	30-I-601	17212-FTD	0 – 6000 cfm		
AIT-3014-4-DO	BIOLOGICAL BASIN TANK 1-4 DISSOLVED OXYGGEN TRANSMITTER	30-I-601	17215-ADO	0 – 5 ppm	NA	
AIT-3014-4-NH3	BIOLOGICAL BASIN TANK 1-4 AMONIA TRANSMITTER	30-I-601	17215-NH3	0 – 20 mg/l	NA	
FIT-3015	BIOLOGICAL BASIN TRAIN 1 FLOW INDICATOR TRANSMITTER	30-I-601	17212-FM	0 – 5 mgd	NA	
PI-3015	INTERNAL MIXED LIQUOR RECIRCULATION PUMP 2 PRESSURE INDICATOR	30-I-601	17211-PG	0 – 30 psi	NA	
AIT-3021	FERMENTATION TANK 2-1 PH TRANSMITTER	30-I-601	17215-AH	0 - 14	NA	
AIT-3021	FERMENTATION TANK 2-1 ORP TRANSMITTER	30-I-601	17215-AOR	-1500 – 1500 mV	NA	
FIT-3024-1	BIOLOGICAL BASIN TANK 2-1 FLOW INDICATOR TRANSMITTER	30-I-601	17212-FTD	0 – 6000 cfm		
AIT-3024-1	BIOLOGICAL BASIN TANK 2-1 DISSOLVED OXYGGEN TRANSMITTER	30-I-601	17215-ADO	0 – 5 ppm	NA	
FIT-3024-2	BIOLOGICAL BASIN TANK 2-2 FLOW INDICATOR TRANSMITTER	30-I-601	17212-FTD	0 – 6000 cfm		
AIT-3024-2	BIOLOGICAL BASIN TANK 2-2 DISSOLVED OXYGGEN TRANSMITTER	30-I-601	17215-ADO	0 – 5 ppm	NA	

TAG NO.	DESCRIPTION	P&ID	SPEC	RANGE	SETPOINT	COMMENTS
FIT-3024-3	BIOLOGICAL BASIN TANK 2-3FLOW INDICATOR TRANSMITTER	30-I-601	17212-FTD	0 – 6000 cfm		
FIT-3024-4	BIOLOGICAL BASIN TANK 2-4 FLOW INDICATOR TRANSMITTER	30-I-601	17212-FTD	0 – 6000 cfm		
AIT-3024-4-DO	BIOLOGICAL BASIN TANK 2-4 DISSOLVED OXYGGEN TRANSMITTER	30-I-601	17215-ADO	0 – 5 ppm	NA	
AIT-3024-4-NH3	BIOLOGICAL BASIN TANK 2-4 AMONIA TRANSMITTER	30-I-601	17215-NH3	0 – 20 mg/l	NA	
FIT-3025	INTERNAL MIXED LIQUOR RECIRCULATION PUMP 2 FLOW TRANSMITTER	30-I-601	17212-FM	0 – 5 mgd	NA	
PI-3025	INTERNAL MIXED LIQUOR RECIRCULATION PUMP 2 PRESSURE INDICATOR	30-I-601	17211-PG	0 – 30 psi	NA	
AIT-3031	DE-OX BASIN 1 DISSOLVED OXYGGEN TRANSMITTER	30-I-603	17215-ADO	0 – 5 ppm	NA	
LSH-3031	DE-OX BASIN 1 HIGH LEVEL FLOAT	30-I-603	17211-LFS	NA		
AIT-3032	DE-OX BASIN 2 DISSOLVED OXYGGEN TRANSMITTER	30-I-603	17215-ADO	0 – 5 ppm	NA	
LSH-3032	DE-OX BASIN 1 HIGH LEVEL FLOAT	30-I-603	17211-LFS	NA		
PDIT-3041	AERATION BLOWER 1 DIFFERENTIAL PRESSURE INDICATOR	30-I-604	17212-PDT	Vendor Provided	NA	
TIT-3041-1	AERATION BLOWER 1 SUCTION TEMPERATURE TRANSMITTER	30-I-604	17212-TMP	Vendor Provided		
PIT-3041-1	AERATION BLOWER 1 SUCTION PRESSURE TRANSMITTER	30-I-604	17212-PGT	Vendor Provided		
TIT-3041-2	AERATION BLOWER 1 DISCHARGE TEMPERATURE TRANSMITTER	30-I-604	17212-TMP	Vendor Provided		
PI-3041	AERATION BLOWER 1 DISCHARGE PRESSURE INDICATOR	30-I-604	17211-PG	Vendor Provided		
PIT-3041-2	AERATION BLOWER 1 DISCHARGE PRESSURE TRANSMITTER	30-I-604	17212-PGT	Vendor Provided		
PDIT-3042	AERATION BLOWER 2 DIFFERENTIAL PRESSURE INDICATOR	30-I-604	17212-PDT	Vendor Provided	NA	
TIT-3042-1	AERATION BLOWER 2 SUCTION TEMPERATURE TRANSMITTER	30-I-604	17212-TMP	Vendor Provided		
PIT-3042-1	AERATION BLOWER 2 SUCTION PRESSURE TRANSMITTER	30-I-604	17212-PGT	Vendor Provided		

TAG NO.	DESCRIPTION	P&ID	SPEC	RANGE	SETPOINT	COMMENTS
TIT-3042-2	AERATION BLOWER 2 DISCHARGE TEMPERATURE TRANSMITTER	30-I-604	17212-TMP	Vendor Provided		
PI-3042	AERATION BLOWER 2 DISCHARGE PRESSURE INDICATOR	30-I-604	17211-PG	Vendor Provided		
PIT-3042-2	AERATION BLOWER 2 DISCHARGE PRESSURE TRANSMITTER	30-I-604	17212-PGT	Vendor Provided		
PDIT-3043	AERATION BLOWER 3 DIFFERENTIAL PRESSURE INDICATOR	30-I-604	17212-PDT	Vendor Provided	NA	
TIT-3043-1	AERATION BLOWER 3 SUCTION TEMPERATURE TRANSMITTER	30-I-604	17212-TMP	Vendor Provided		
PIT-3043-1	AERATION BLOWER 3 SUCTION PRESSURE TRANSMITTER	30-I-604	17212-PGT	Vendor Provided		
TIT-3043-2	AERATION BLOWER 3 DISCHARGE TEMPERATURE TRANSMITTER	30-I-604	17212-TMP	Vendor Provided		
PI-3043	AERATION BLOWER 3 DISCHARGE PRESSURE INDICATOR	30-I-604	17211-PG	Vendor Provided		
PIT-3043-2	AERATION BLOWER 3 DISCHARGE PRESSURE TRANSMITTER	30-I-604	17212-PGT	Vendor Provided		
PIT-3040	AERATION BLOWER PRESSURE INDICATOR TEMPERATURE	30-I-604	17212-PGT	0 – 15 psi	NA	
AIT-3111	POST ANOXIC TANK 1 DISSOLVED OXYGEN TRANSMITTER	31-I-601	17215-ADO	0 – 5 ppm	NA	
LIT-3111	POST ANOXIC TANK 1 LEVEL INDICATOR TRANSMITTER 1	31-I-601	17212-LST2	0 – 20 ft	NA	
AIT-3112	POST ANOXIC TANK 2 DISSOLVED OXYGEN TRANSMITTER	31-I-601	17215-ADO	0 – 5 ppm	NA	
LIT-3112	POST ANOXIC TANK 2 LEVEL INDICATOR TRANSMITTER 2	31-I-601	17212-LST2	0 – 20 ft	NA	
LSL-3112	POST ANOXIC TANK DRAIN SUMP LOW LEVEL FLOAT	31-I-601	17216-LFS	NA		
LSH-3112	POST ANOXIC TANK DRAIN SUMP HIGH LEVEL FLOAT	31-I-601	17216-LFS	NA		
LSHH-3112	POST ANOXIC TANK DRAIN SUMP HIGH HIGH LEVEL FLOAT	31-I-601	17216-LFS	NA		
LSHH-4010	MBR FEED PUMP STATION LEVEL SWITCH HIGH HIGH	40-I-601	17216-LFS	NA		
LIT-4010-1	MBR FEED PUMP STATION LEVEL INDICATOR TRANSMITTER 1	40-I-601	17212-LST2	0 – 20 ft	NA	

TAG NO.	DESCRIPTION	P&ID	SPEC	RANGE	SETPOINT	COMMENTS
PI-4011	MBR FEED PUMP 1 PRESSURE INDICATOR 1	40-I-601	17211-PG	0 – 60 psi	NA	
PI-4012	MBR FEED PUMP 2 PRESSURE INDICATOR 2	40-I-601	17211-PG	0 – 60 psi	NA	
PI-4013	MBR FEED PUMP 3 PRESSURE INDICATOR 3	40-I-601	17211-PG	0 – 60 psi	NA	
PI-4014	MBR FEED PUMP 4 PRESSURE INDICATOR 4	40-I-601	17211-PG	0 – 60 psi	NA	
LIT-4010-2	MBR FEED PUMP STATION LEVEL INDICATOR TRANSMITTER 2	40-I-601	17212-LST2	0 – 20 ft	NA	
FIT-4010	MBR FEED PUMP STATION FLOWMETER	40-I-601	17212-FM	0 – 20 mgd	NA	
LIT-5011	MEMBRANE BIO-REACTOR 1 LEVEL INDICATOR TRANSMITTER	50-I-601	17212-LST2	Vendor Provided		
PI-5012-1	MEMBRANE BIO-REACTOR 1 PRESSURE INDICATOR 1	50-I-601	17211-PG	Vendor Provided	Vendor Provided	
PSH-5012-1	MEMBRANE BIO-REACTOR 1 PRESSURE SWITCH HIGH 1	50-I-601	17216-PS	Vendor Provided	Vendor Provided	
PSH-5012-2	MEMBRANE BIO-REACTOR 1 PRESSURE SWITCH HIGH 1	50-I-601	17216-PS	Vendor Provided	Vendor Provided	
PI-5012-2	MEMBRANE BIO-REACTOR 1 PRESSURE INDICATOR 2	50-I-601	17211-PG	Vendor Provided	Vendor Provided	
FIT-5012	MEMBRANE BIO-REACTOR 1 FLOW INDICATOR TRANSMITTER 1	50-I-601	17212-FM	Vendor Provided	Vendor Provided	
AIT-5012	MEMBRANE BIO-REACTOR 1 TUBIDITY TRANSMITTER	50-I-601	17215-SO	Vendor Provided	Vendor Provided	
LIT-5021	MEMBRANE BIO-REACTOR 2 LEVEL INDICATOR TRANSMITTER	50-I-601	17212-LST2	Vendor Provided	Vendor Provided	
PI-5022-1	MEMBRANE BIO-REACTOR 2 PRESSURE INDICATOR 1	50-I-601	17211-PG	Vendor Provided	Vendor Provided	
PSH-5022-1	MEMBRANE BIO-REACTOR 2 PRESSURE SWITCH HIGH 1	50-I-601	17216-PS	Vendor Provided	Vendor Provided	
PSH-5022-2	MEMBRANE BIO-REACTOR 2 PRESSURE SWITCH HIGH 1	50-I-601	17216-PS	Vendor Provided	Vendor Provided	
PI-5022-2	MEMBRANE BIO-REACTOR 2 PRESSURE INDICATOR 2	50-I-601	17211-PG	Vendor Provided	Vendor Provided	
FIT-5022	MEMBRANE BIO-REACTOR 2 FLOW INDICATOR TRANSMITTER 1	50-I-601	17212-FM	Vendor Provided	Vendor Provided	
AIT-5022	MEMBRANE BIO-REACTOR 2 TUBIDITY TRANSMITTER	50-I-601	17215-SO	Vendor Provided	Vendor Provided	
LIT-5031	MEMBRANE BIO-REACTOR 3 LEVEL INDICATOR TRANSMITTER	50-I-601	17212-LST2	Vendor Provided	Vendor Provided	
PI-5032-1	MEMBRANE BIO-REACTOR 3 PRESSURE INDICATOR 1	50-I-601	17211-PG	Vendor Provided	Vendor Provided	

TAG NO.	DESCRIPTION	P&ID	SPEC	RANGE	SETPOINT	COMMENTS
PSH-5032-1	MEMBRANE BIO-REACTOR 3 PRESSURE SWITCH HIGH 1	50-I-601	17216-PS	Vendor Provided	Vendor Provided	
PSH-5032-2	MEMBRANE BIO-REACTOR 3 PRESSURE SWITCH HIGH 1	50-I-601	17216-PS	Vendor Provided	Vendor Provided	
PI-5032-2	MEMBRANE BIO-REACTOR 3 PRESSURE INDICATOR 2	50-I-601	17211-PG	Vendor Provided	Vendor Provided	
FIT-5032	MEMBRANE BIO-REACTOR 3 FLOW INDICATOR TRANSMITTER 1	50-I-601	17212-FM	Vendor Provided	Vendor Provided	
AIT-5032	MEMBRANE BIO-REACTOR 3 TUBIDITY TRANSMITTER	50-I-601	17215-SO	Vendor Provided	Vendor Provided	
LIT-5041	MEMBRANE BIO-REACTOR 4 LEVEL INDICATOR TRANSMITTER	50-I-601	17212-LST2	Vendor Provided	Vendor Provided	
PI-5042-1	MEMBRANE BIO-REACTOR 4 PRESSURE INDICATOR 1	50-I-601	17211-PG	Vendor Provided	Vendor Provided	
PSH-5042-1	MEMBRANE BIO-REACTOR 4 PRESSURE SWITCH HIGH 1	50-I-601	17216-PS	Vendor Provided	Vendor Provided	
PSH-5042-2	MEMBRANE BIO-REACTOR 4 PRESSURE SWITCH HIGH 1	50-I-601	17216-PS	Vendor Provided	Vendor Provided	
PI-5042-2	MEMBRANE BIO-REACTOR 4 PRESSURE INDICATOR 2	50-I-601	17211-PG	Vendor Provided	Vendor Provided	
FIT-5042	MEMBRANE BIO-REACTOR 4 FLOW INDICATOR TRANSMITTER 1	50-I-601	17212-FM	Vendor Provided	Vendor Provided	
AIT-5042	MEMBRANE BIO-REACTOR 4 TUBIDITY TRANSMITTER	50-I-601	17215-SO	Vendor Provided	Vendor Provided	
LIT-5050	MEMBRANE BIO-REACTOR CIP/BACKPULSE SYSTEM LEVEL INDICATOR TRANSMITTER 1	50-I-605	17212-LUT	Vendor Provided	Vendor Provided	
PIT-5060	MEMBRANE BIO-REACTOR INSTRUMENT AIR SYSTEM PRESSURE INDICATOR TRANSMITTER	50-I-606	17212-PGT	Vendor Provided	Vendor Provided	
PDI-5071	AIR SCOUR BLOWER 1 DIFFERENTIAL PRESSURE INDICATOR	50-I-607	17211-PDI	Vendor Provided	Vendor Provided	
PSL-5071	AIR SCOUR BLOWER 1 SUCTION LOW PRESSURE SWITCH	50-I-607	17216-PS	Vendor Provided	Vendor Provided	
PI-5071-1	AIR SCOUR BLOWER 1 SUCTION PRESSURE INDICATOR	50-I-607	17211-PG	Vendor Provided	Vendor Provided	
TI-5071	AIR SCOUR BLOWER 1 DISCHARGE TEMPERATURE INDICATOR	50-I-607	17211-TI	Vendor Provided	Vendor Provided	
PI-5071-2	AIR SCOUR BLOWER 1 DISCHARGE PRESSURE INDICATOR	50-I-607	17211-PG	Vendor Provided	Vendor Provided	
PSH-5071	AIR SCOUR BLOWER 1 DISCHARGE HIGH PRESSURE SWITCH	50-I-607	17216-PS	Vendor Provided	Vendor Provided	

TAG NO.	DESCRIPTION	P&ID	SPEC	RANGE	SETPOINT	COMMENTS
PDI-5072	AIR SCOUR BLOWER 2 DIFFERENTIAL PRESSURE INDICATOR	50-I-607	17211-PDI	Vendor Provided	Vendor Provided	
PSL-5072	AIR SCOUR BLOWER 2 SUCTION LOW PRESSURE SWITCH	50-I-607	17216-PS	Vendor Provided	Vendor Provided	
PI-5072-1	AIR SCOUR BLOWER 2 SUCTION PRESSURE INDICATOR	50-I-607	17211-PG	Vendor Provided	Vendor Provided	
TI-5072	AIR SCOUR BLOWER 2 DISCHARGE TEMPERATURE INDICATOR	50-I-607	17211-TI	Vendor Provided	Vendor Provided	
PI-5072-2	AIR SCOUR BLOWER 2 DISCHARGE PRESSURE INDICATOR	50-I-607	17211-PG	Vendor Provided	Vendor Provided	
PSH-5072	AIR SCOUR BLOWER 2 DISCHARGE HIGH PRESSURE SWITCH	50-I-607	17216-PS	Vendor Provided	Vendor Provided	
PDI-5073	AIR SCOUR BLOWER 3 DIFFERENTIAL PRESSURE INDICATOR	50-I-607	17211-PDI	Vendor Provided	Vendor Provided	
PSL-5073	AIR SCOUR BLOWER 3 SUCTION LOW PRESSURE SWITCH	50-I-607	17216-PS	Vendor Provided	Vendor Provided	
PI-5073-1	AIR SCOUR BLOWER 3 SUCTION PRESSURE INDICATOR	50-I-607	17211-PG	Vendor Provided	Vendor Provided	
TI-5073	AIR SCOUR BLOWER 3 DISCHARGE TEMPERATURE INDICATOR	50-I-607	17211-TI	Vendor Provided	Vendor Provided	
PI-5073-2	AIR SCOUR BLOWER 3 DISCHARGE PRESSURE INDICATOR	50-I-607	17211-PG	Vendor Provided	Vendor Provided	
PSH-5073	AIR SCOUR BLOWER 3 DISCHARGE HIGH PRESSURE SWITCH	50-I-607	17216-PS	Vendor Provided	Vendor Provided	
PDI-5074	AIR SCOUR BLOWER 4 DIFFERENTIAL PRESSURE INDICATOR	50-I-607	17211-PDI	Vendor Provided	Vendor Provided	
PSL-5074	AIR SCOUR BLOWER 4 SUCTION LOW PRESSURE SWITCH	50-I-607	17216-PS	Vendor Provided	Vendor Provided	
PI-5074-1	AIR SCOUR BLOWER 4 SUCTION PRESSURE INDICATOR	50-I-607	17211-PG	Vendor Provided	Vendor Provided	
TI-5074	AIR SCOUR BLOWER 4 DISCHARGE TEMPERATURE INDICATOR	50-I-607	17211-TI	Vendor Provided	Vendor Provided	
PI-5074-2	AIR SCOUR BLOWER 4 DISCHARGE PRESSURE INDICATOR	50-I-607	17211-PG	Vendor Provided	Vendor Provided	
PSH-5074	AIR SCOUR BLOWER 4 DISCHARGE HIGH PRESSURE SWITCH	50-I-607	17216-PS	Vendor Provided	Vendor Provided	

TAG NO.	DESCRIPTION	P&ID	SPEC	RANGE	SETPOINT	COMMENTS
PDI-5075	AIR SCOUR BLOWER 5 DIFFERENTIAL PRESSURE INDICATOR	50-I-607	17211-PDI	Vendor Provided	Vendor Provided	
PSL-5075	AIR SCOUR BLOWER 5 SUCTION LOW PRESSURE SWITCH	50-I-607	17216-PS	Vendor Provided	Vendor Provided	
PI-5075-1	AIR SCOUR BLOWER 5 SUCTION PRESSURE INDICATOR	50-I-607	17211-PG	Vendor Provided	Vendor Provided	
TI-5075	AIR SCOUR BLOWER 5 DISCHARGE TEMPERATURE INDICATOR	50-I-607	17211-TI	Vendor Provided	Vendor Provided	
PI-5075-2	AIR SCOUR BLOWER 5 DISCHARGE PRESSURE INDICATOR	50-I-607	17211-PG	Vendor Provided	Vendor Provided	
PSH-5075	AIR SCOUR BLOWER 5 DISCHARGE HIGH PRESSURE SWITCH	50-I-607	17216-PS	Vendor Provided	Vendor Provided	
PDI-5076	THICKENED SLUDGE BLOWER DIFFERENTIAL PRESSURE INDICATOR	50-I-607	17211-PDI	Vendor Provided	Vendor Provided	
PSL-5076	THICKENED SLUDGE BLOWER SUCTION LOW PRESSURE SWITCH	50-I-607	17216-PS	Vendor Provided	Vendor Provided	
PI-5076-1	THICKENED SLUDGE BLOWER SUCTION PRESSURE INDICATOR	50-I-607	17211-PG	Vendor Provided	Vendor Provided	
TI-5076	THICKENED SLUDGE BLOWER DISCHARGE TEMPERATURE INDICATOR	50-I-607	17211-TI	Vendor Provided	Vendor Provided	
PI-5076-2	THICKENED SLUDGE BLOWER DISCHARGE PRESSURE INDICATOR	50-I-607	17211-PG	Vendor Provided	Vendor Provided	
PSH-5076	THICKENED SLUDGE BLOWER DISCHARGE HIGH PRESSURE SWITCH	50-I-607	17216-PS	Vendor Provided	Vendor Provided	
PIT-5070	AIR SCOUR PRESSURE INDICATOR TRANSMITTER	50-I-607	17212-PGT	Vendor Provided	Vendor Provided	
FI-5080	MEMBRANE CITRIC ACID DILUTION WATER MEMTER	50-I-608	17211-FPM	Vendor Provided	Vendor Provided	
LSH-5080	MEMBRANE CITRIC ACID CONTAINMENT LEVEL SWITCH HIGH	50-I-608	17216-LCS	Vendor Provided	Vendor Provided	
LIT-5080	MEMBRANE CITRIC ACID TANK LEVEL TRANSMITTER	50-I-608	17212-LUT	Vendor Provided	Vendor Provided	
PSH-5081	MEMBRANE CITRIC ACID FEED PUMP 1 PRESSURE SWITCH HIGH	50-I-608	17216-PS	Vendor Provided	Vendor Provided	
PI-5081	MEMBRANE CITRIC ACID FEED PUMP 1 PRESSURE INDICATOR	50-I-608	17211-PG	Vendor Provided	Vendor Provided	
PSH-5082	MEMBRANE CITRIC ACID FEED PUMP 2 PRESSURE SWITCH HIGH	50-I-608	17216-PS	Vendor Provided	Vendor Provided	

TAG NO.	DESCRIPTION	P&ID	SPEC	RANGE	SETPOINT	COMMENTS
PI-5082	MEMBRANE CITRIC ACID FEED PUMP 2 PRESSURE INDICATOR	50-I-608	17211-PG	Vendor Provided	Vendor Provided	
FIT-5091	MEMBRANE THICKENING SYSTEM FLOW INDICATOR TRANSMITTER	50-I-609	17212-FM	Vendor Provided	Vendor Provided	
FIT-5093	MEMBRANE THICKENING SYSTEM INSTRUMENT AIR PRESSURE INDICATOR	50-I-609	17212-FTD	Vendor Provided	Vendor Provided	
PI-5093	MEMBRANE THICKENING SYSTEM INSTRUMENT AIR PRESSURE INDICATOR	50-I-609	17211-PG	Vendor Provided	Vendor Provided	
LIT-5091	MEMBRANE THICKENING SYSTEM LEVEL INDICATOR TRANSMITTER	50-I-609	17212-LST2	Vendor Provided	Vendor Provided	
PI-5092-1	SLUDGE THICKENING PUMP SUCTION PRESSURE INDICATOR	50-I-609	17211-PG	Vendor Provided	Vendor Provided	
PSL-5092-1	SLUDGE THICKENING PUMP SUCTION LOW PRESSURE SWITCH	50-I-609	17216-PS	Vendor Provided	Vendor Provided	
PI-5092-2	SLUDGE THICKENING PUMP DISCHRAGE PRESSURE INDICATOR	50-I-609	17211-PG	Vendor Provided	Vendor Provided	
PSH-5092-2	SLUDGE THICKENING PUMP DISCHRAGE LOW PRESSURE SWITCH	50-I-609	17216-PS	Vendor Provided	Vendor Provided	
FIT-5092	MEMBRANE THICKENING SYSTEM FLOW INDICATOR TRANSMITTER	50-I-609	17212-FM	Vendor Provided	Vendor Provided	
AIT-5092	MEMBRANE THICKENING SYSTEM TUBIDITY TRANSMITTER	50-I-609	17215-SO	Vendor Provided	Vendor Provided	
AIT-5091	MEMBRANE THICKENING SYSTEM SUSPENDED SOLIDS TRANSMITTER	50-I-609	17215-SO	Vendor Provided	Vendor Provided	
LSH-5113	UV DISINFECTION LEVEL 1 SWITCH HIGH	51-I-601	17216-LCS	Vendor Provided	Vendor Provided	
AIT-5111	UV EFFLUENT CHANNEL 1 UV TRANSMISTIVITY TRANSMITTER	51-I-601	11737	Vendor Provided	Vendor Provided	
LSH-5123	UV DISINFECTION LEVEL 2 SWITCH HIGH	51-I-601	17216-LCS	Vendor Provided	Vendor Provided	
AIT-5121	UV EFFLUENT CHANNEL 2 UV TRANSMISTIVITY TRANSMITTER	51-I-601	11737	Vendor Provided	Vendor Provided	
PI-5131	GOLF COURSE REUSE PUMP 1 PRESSURE INDICATOR	51-I-603	17211-PG	0 – 30 psi	NA	
PSL-5131	GOLF COURSE REUSE PUMP 1 LOW PRESSURE SWITCH	51-I-603	17216-PS			
PSH-5131	GOLF COURSE REUSE PUMP 1 HIGH PRESSURE SWITCH	51-I-603	17216-PS			

TAG NO.	DESCRIPTION	P&ID	SPEC	RANGE	SETPOINT	COMMENTS
PI-5132	GOLF COURSE REUSE PUMP 2 PRESSURE INDICATOR	51-I-603	17211-PG	0 – 30 psi	NA	
PSL-5132	GOLF COURSE REUSE PUMP 2 LOW PRESSURE SWITCH	51-I-603	17216-PS			
PSH-5132	GOLF COURSE REUSE PUMP 2 HIGH PRESSURE SWITCH	51-I-603	17216-PS			
PI-5133	PLANT WATER PUMP 1 PRESSURE INDICATOR	51-I-603	17211-PG	0 – 200 psi	NA	
PI-5134	PLANT WATER PUMP 2 PRESSURE INDICATOR	51-I-603	17211-PG	0 – 200 psi	NA	
AIT-5130	GOLF COURSE REUSE TURBIDITY TRANSMITTER	51-I-603	17215-SO	0 – 5 NTU	NA	
FIT-5130	GOLF COURSE REUSE INDICATOR TRANSMITTER	51-I-603	17212-FM	0 – 1000 gpm	NA	
PIT-5130	GOLF COURSE REUSE PRESSURE INDICATOR TRANSMITTER	51-I-603	17212-PGT	0 – 200 psi	NA	
PIT-5133	PLANT WATER PRESSURE INDICATOR TRANSMITTER	51-I-603	17212-PGT	0 – 200 psi	NA	
FIT-5136	EFFLUENT CHANNEL FLOW INDICATOR TRANSMITTER	51-I-603	17212-LUT	0 – 10 mgd	NA	
TIT-5136	EFFLUENT CHANNEL FLOW TEMPERATURE TRANSMITTER	51-I-603	17212-TMP	0 – 120 F	NA	
PIT-5140	HYDROPNEUMATIC TANK PRESSURE TRANSMITTER	51-I-604	17212-PGT	0 – 200 psi		
LIT-5140	HYDROPNEUMATIC TANK LEVEL TRANSMITTER	51-I-604	17212-LFT	0 – 15 ft		
LI-5140	HYDROPNEUMATIC TANK PRESSURE INDICATOR	51-I-604	Equipment Spec			
PSH-5140	AIR RECIEVER TANK PRESSURE SWITCH HIGH	51-I-604	Equipment Spec			
PSL-5140	AIR RECIEVER TANK PRESSURE SWITCH LOW	51-I-604	Equipment Spec			
PSLL-5140	AIR RECIEVER TANK PRESSURE SWITCH LOW LOW	51-I-604	Equipment Spec			
PI-5140	AIR RECIEVER TANK PRESSURE INDICATOR	51-I-604	Equipment Spec			
LSH-5210	SODIUM HYDROXIDE STORAGE TANK LEVEL SWITCH HIGH	52-I-601	17216-LCS	NA		
LI-5210-1	SODIUM HYDROXIDE STORAGE TANK 1 LEVEL INDICATOR 1	52-I-601	Equipment Spec	Vendor Provided	NA	
LIT-5210-1	SODIUM HYDROXIDE STORAGE TANK 1 LEVEL INDICATOR TRANSMITTER 1	52-I-601	17212-LUT	0 – 15 ft	NA	
LI-5210-2	SODIUM HYDROXIDE STORAGE TANK 2 LEVEL INDICATOR 2	52-I-601	Equipment Spec	Vendor Provided	NA	

TAG NO.	DESCRIPTION	P&ID	SPEC	RANGE	SETPOINT	COMMENTS
LIT-5210-2	SODIUM HYDROXIDE STORAGE TANK 2 LEVEL INDICATOR TRANSMITTER 2	52-I-601	17212-LUT	0 – 15 ft	NA	
PSH-5211	SODIUM HYDROXIDE METERING PUMP 1 PRESSURE INDICATOR	50-I-601	17216-PS	NA		
PI-5211	SODIUM HYDROXIDE METERING PUMP 1 PRESSURE INDICATOR	52-I-601	17211-PG	0 – 100 psi	NA	
PSH-5212	SODIUM HYDROXIDE METERING PUMP 2 PRESSURE SWITCH HIGH	50-I-601	17216-PS	NA		
PI-5212	SODIUM HYDROXIDE METERING PUMP 2 PRESSURE INDICATOR	52-I-601	17211-PG	0 – 100 psi	NA	
PSH-5213	SODIUM HYDROXIDE METERING PUMP 3 PRESSURE SWITCH HIGH	50-I-601	17216-PS	NA		
PI-5213	SODIUM HYDROXIDE METERING PUMP 3 PRESSURE INDICATOR	52-I-601	17211-PG	0 – 100 psi	NA	
LSH-5220	ACETIC ACID STORAGE TANK LEVEL SWITCH HIGH	52-I-602	17216-LCS	NA		
LI-5220	ACETIC ACID STORAGE TANK LEVEL INDICATOR	52-I-602	Equipment Spec	Vendor Provided		
LIT-5220	ACETIC ACID STORAGE TANK LEVEL INDICATOR TRANSMITTER	52-I-602	17212-LUT	0 – 9 ft	NA	
PSH-5221	ACETIC ACID STORAGE TANK PRESSURE SWITCH HIGH	52-I-602	17216-PS	NA		
PI-5221	ACETIC ACID METERING PUMP 1PRESSURE INDICATOR 2	52-I-602	17211-PG	0 – 100 psi	NA	
PSH-5222	ACETIC ACID STORAGE TANK PRESSURE SWITCH HIGH	52-I-602	17216-PS	NA		
PI-5222	ACETIC ACID METERING PUMP 2 PRESSURE INDICATOR 2	52-I-602	17211-PG	0 – 100 psi	NA	
LSH-5230	SODIUM HYPOCHLORITE STORAGE TANK LEVEL SWITCH HIGH	52-I-603	17216-LCS	NA		
LIT-5230	SODIUM HYPOCHLORITE STORAGE TANK LEVEL INDICATOR	52-I-603	17212-LUT	0 – 8 ft	NA	
LI-5230	SODIUM HYPOCHLORITE STORAGE TANK INDICATOR TRANSMITTER	52-I-603	Equipment Spec	Vendor Provided		
PSH-5231	SODIUM HYPOCHLORITE PERISTALITIC PUMP 1 PRESSURE SWITCH HIGH	52-I-603	17216-PS	NA		
PI-5231	SODIUM HYPOCHLORITE PERISTALITIC PUMP 1 PRESSURE INDICATOR	52-I-603	17211-PG	0 – 100 psi	NA	

TAG NO.	DESCRIPTION	P&ID	SPEC	RANGE	SETPOINT	COMMENTS
PSH-5322	SODIUM HYPOCHLORITE PERISTALITIC PUMP 2 PRESSURE SWITCH HIGH	52-I-603	17216-PS	NA		
PI-5232	SODIUM HYPOCHLORITE PERISTALITIC PUMP 2 PRESSURE INDICATOR	52-I-603	17211-PG	0 – 100 psi	NA	
PSH-5323	SODIUM HYPOCHLORITE PERISTALITIC PUMP 3 PRESSURE SWITCH HIGH	52-I-603	17216-PS	NA		
PI-5233	SODIUM HYPOCHLORITE PERISTALITIC PUMP 3 PRESSURE INDICATOR	52-I-603	17211-PG	0 – 100 psi	NA	
FSH-5241	TRUCK LOADING SAFETY SHOWER AND EYEWASH FLOW SWITCH	52-I-604	17216-FTS	NA		
FSH-5242	HYPOCHLORITE SAFETY SHOWER AND EYEWASH FLOW SWITCH	52-I-604	17216-FTS	NA		
FSH-5243	CAUSTIC SAFETY SHOWER AND EYEWASH FLOW SWITCH	52-I-604	17216-FTS	NA		
FSH-5244	ACETIC ACID SAFETY SHOWER AND EYEWASH FLOW SWITCH	52-I-604	17216-FTS	NA		
FSH-5245	LAB AREA EYEWASH FLOW SWITCH	52-I-604	17216-FTS	NA		
FSH-5246	GENERATOR AREA SAFETY SHOWER AND EYEWASH FLOW SWITCH	52-I-604	17216-FTS	NA		
FSH-5247	CITRIC ACID SAFETY SHOWER AND EYEWASH FLOW SWITCH	52-I-604	17216-FTS	NA		
LSH-5250	FERRIC CHLORIDE STORAGE TANK LEVEL SWITCH HIGH	52-I-604	17216-LCS	NA		
LI-5250	FERRIC CHLORIDE STORAGE TANK LEVEL INDICATOR	52-I-604	Equipment Spec	Vendor Provided		
LIT-5250	FERRIC CHLORIDE STORAGE TANK LEVELINDICATOR TRANSMITTER	52-I-604	17212-LUT	0 – 15 ft	NA	
PSL-5251	FERRIC CHLORIDE PRESSURE SWITCH LOW1	52-I-604	17216-PS	NA		
PI-5251	FERRIC CHLORIDE METERING PUMP 1 PRESURE INDICATOR	52-I-604	17211-PG	0 – 100 psi	NA	
PSL-5252	FERRIC CHLORIDE PRESSURE SWITCH LOW1	52-I-604	17216-PS	NA		
PI-5252	FERRIC CHLORIDE METERING PUMP 1 PRESURE INDICATOR	52-I-604	17211-PG	0 – 100 psi	NA	
LIT-6010-1	PLANT DRAIN PUMPING STATION LEVEL INDICATOR TRANSMITTER 1	60-1-601	17212-LST2	0 – 25 ft	NA	
LIT-6010-2	PLANT DRAIN PUMPING STATION LEVEL INDICATOR TRANSMITTER 2	60-1-601	17212-LST2	0 – 25 ft	NA	

TAG NO.	DESCRIPTION	P&ID	SPEC	RANGE	SETPOINT	COMMENTS
LSHH-6010	PLANT DRAIN PUMPING STATION LEVEL SWITCH HIGH HIGH	60-1-601	17216-LFS	NA		
LSLL-6010	PLANT DRAIN PUMPING STATION LEVEL SWITCH LOW LOW	60-1-601	17216-LFS	NA		
PI-6011	PLANT DRAIN PUMP 1 PRESSURE INDICATOR 1	60-1-601	17211-PG	0 – 60 psi	NA	
PI-6012	PLANT DRAIN PUMP 2 PRESSURE INDICATOR 2	60-1-601	17211-PG	0 – 60 psi	NA	
LS-9011	GENERATOR 1 LOW FUEL SWITCH	90-I-601	Equipment Spec	Vendor Provided		
LT-9011	GENERATOR 1 FUEL LEVEL TRANSMITTER	90-I-601	Equipment Spec	Vendor Provided		
LS-9012	GENERATOR 2 LOW FUEL SWITCH	90-I-601	Equipment Spec	Vendor Provided		
LT-9012	GENERATOR 2 FUEL LEVEL TRANSMITTER	90-I-601	Equipment Spec	Vendor Provided		

END OF SECTION

SECTION 17211

PROCESS TAPS AND PRIMARY ELEMENTS

PART 1--GENERAL

1.01 DESCRIPTION

This section specifies requirements for instrumentation elements that quantitatively convert the measured variable energy into a form suitable for measurement and process measurement accessories. Application requirements are specified in Section 17200.

A. SCOPE:

This section specifies requirements for instrumentation elements which form a part of the process control systems specified in Section 17000 and Section 17200 – Instrument Index. Application requirements are specified in the instrument schedule, paragraph 17200-3.03.

B. OPERATING REQUIREMENTS:

The devices specified in this section quantitatively convert the measured variable energy into a form suitable for measurement and process measurement accessories.

1.02 REFERENCES

References are listed in Section 17000. They are a part of this section as specified and modified.

1.03 SUBMITTALS

Submittals shall be provided as specified in paragraph 17200-1.03.

PART 2--PRODUCTS

2.01 INSTRUMENTATION SPECIFICATION SHEETS (INSTRUSPEC)

General requirements for primary elements specified in this section are specified on the INSTRUSPEC sheets in paragraph 17211-3.04.

2.02 VALVES

A. ISOLATION VALVES:

Valves shall be full port ball valves with ASTM A276, Type 316 stainless steel trim and body and with Teflon seats and packing. Valves shall be Parker CPI, Whitey, Hoke, or equal.

B. GAGE VALVES:

Gage valves shall be machined from ASTM A276, Type 316 stainless steel bar stock and shall be provided with 1/2-inch NPT connections and integral bleed plug. Valves shall be Anderson, Greenwood & Company M9 VIS-44, Hoke 6801L8Y, or equal.

C. ROOT VALVES:

Root valves shall be ASTM A276, Type 316 stainless steel bar stock with 1/2-inch NPT male process connection and three 1/2-inch NPT female instrument connections. One instrument connection shall be provided with an ASTM A276, Type 316 stainless steel bleed valve. ASTM A276, Type 316 stainless steel plugs shall be provided for unused ports.

Lagging type units shall be provided for insulated vessels and pipes.

Root valve manufactures: Anderson, Greenwood & Company M5 VIS-44, Hoke 6802L8Y, or equal.

D. MANIFOLDS:

Manifolds shall be three-valve bar-stock type. Manifold body shall be machined from ASTM Type 316 stainless steel bar stock. Valves shall be globe configuration with 316 stainless steel ball seats and Teflon stem packing.

Manifolds shall be designed for direct mounting to differential pressure transmitters in place of the flanges normally furnished. Fabricated manifolds or manifolds employing needle or soft seat valves are not acceptable. Purge taps, 1/8-inch NPT shall be furnished on manifolds where water purge is specified.

Manifold manufacturers: Anderson Greenwood AX3T VIS-4, Hoke GP831211F8YL, or equal.

2.03 TUBING AND TUBING FITTINGS

A. STAINLESS STEEL TUBING:

Tubing shall be seamless annealed ASTM A269 Type 316 stainless steel 1/2-inch and 3/8-inch tubing shall have a wall thickness of 0.035 inches and 1/4-inch tubing shall have a wall thickness of 0.028 inches.

B. PLASTIC TUBING:

Tubing shall be extruded from high molecular weight, low density polyethylene compound. Tubing shall be 1/4-inch outside diameter and shall be black, unless otherwise specified or shown. Tubing shall meet the standard ASTM #D-1693 test for stress cracking of base materials. Wall

thickness shall be 0.040 inches plus or minus 0.005 inches. Maximum working pressure shall be 80 psig, at 100 degrees F, or higher.

Tubing manufacturers: Dekoron "P", Parker Hannifin "E", or equal.

C. TUBING FITTINGS:

Tubing fittings shall be Type 316 stainless steel and shall be the double-ferrule swage type. Flare, ball sleeve compression or single-ferrule swage type is not acceptable.

Fitting manufactures: Crawford "Swagelok", Hoke "Gyrolok", or equal.

2.04 CHEMICAL SEALS

A. DIAPHRAGM SEALS:

Seal shall be the diaphragm type with flushing connection, Type 316 stainless steel body and Type 316L diaphragm unless otherwise specified.

Diaphragm seal manufactures: Mansfield and Green Type SG, Ashcroft Type 101, or equal.

B. ANNULAR SEALS:

Seal shall be the in-line full stream captive sensing liquid type. Metallic wetted parts shall be Type 316 stainless steel. Flexible cylinder shall be Buna-N unless otherwise specified. Seals shall be rated 200 psig with not more than 5-inch water column (WC) hysteresis.

Annular seal manufactures: Ronningen-Petter Iso-Ring, Red Valve series 40, or equal.

C. FILL FLUID:

Chemical seals and associated instruments shall be factory filled as follows:

Instrument side of seal, capillary tubing, and instrument shall be evacuated to an absolute pressure of 1.0 Torr or less; filled; and sealed. Provide silicone oil fill fluid, unless otherwise recommended by the seal manufacture.

Chemical seal manufacture: Dow Corning DC200, Syltherm 800, or equal.

2.05 BUSHINGS AND THERMOWELLS

Bushings or thermowells shall comply with ASME B40.200. Temperature taps shall be 1/2-inch NPT, and lagging extensions shall be provided on insulated vessels or pipes. Thermowells and bushings shall be machined from Type 316 stainless steel bar stock unless otherwise specified.

2.06 PURGE ASSEMBLIES

The purge assembly for air or water for flushing seals on sludge level measurement applications with a choice of Buna, Viton, Etylene Propylene O-Rings.

A. AIR:

Air purge assembly shall consist of a constant-differential relay, needle valve, check valve and 0.2 to 2.0 standard cubic feet per hour rotameter.

Assembly manufacturer: ABB Purgemaster Series 10A6100, or equal.

B. WATER:

Water purge assembly shall consist of a strainer, constant-differential regulator, needle valve, check valve, and 20 to 200 cc/m rotameter. Provide 155 micron wye-type strainer.

Strainer manufacturer: ASCO 8600A2, Crane, or equal.

Assembly manufacturer: ABB Purgemaster Series 10A6100, or equal.

2.07 PRODUCT DATA

A. GENERAL:

In accordance with Section 01300 and Section 00710-4.02, drawings, information, and technical data for all equipment as, required in Section 17000 and this section shall be provided. All required product data for this section shall be included in one complete package.

B. ADDITIONAL INFORMATION:

The following product data shall be provided:

1. Flow calculation for each differential-type flow element.

2. Record documentation shall include the data sheets specified in this section.

PART 3--EXECUTION

3.01 INSTALLATION

A. PROCESS CONNECTIONS:

Process taps shall comply with API RP551. Root valves shall be provided at taps, except temperature taps and pump discharge pressure taps. Process connections shall be arranged such

that instruments may be readily removed for maintenance without disruption of process units or draining of large tanks or vessels.

Unions or flange connections shall be provided as necessary to permit removal without rotating equipment. Where process taps are not readily accessible from instrument locations, a block valve shall be provided at the instrument. Block valves shall also be provided for each instrument where multiple instruments are connected to one process tap.

B. ELECTRICAL CONNECTIONS:

Final connections between rigid raceway systems and instruments shall be made with jacketed flexible conduit with a maximum length of 2 feet.

3.01 INSTALLATION

A. GENERAL:

General requirements for the installation of primary elements specified in this section are listed on INSTRUSPEC sheets and the specific application specified in Section 17200 – Instrument Index.

B. PROCESS CONNECTIONS:

1. GENERAL: Unless otherwise specified, process taps shall comply with Section 15050. Process connections shall be arranged such that instruments may be readily removed for maintenance without disruption of process units or draining of large tanks or vessels. Unions or flange connections shall be provided as necessary to permit removal without rotating equipment.

Where process taps are not readily accessible from instrument locations, an isolation valve shall be provided at the instrument.

Isolation valves shall be provided for each instrument where multiple instruments are connected to one process tap.

Pipe between the process connection and instruments shall be 1/2-inch stainless steel with treatment material for easy removal, as specified herein.

2. SAFETY INSTRUMENTS: No valves shall be installed at pressure taps for safety instruments. Safety instruments shall not be connected to the same process tap as instruments used for control, indication, or recording except when annular chemical seals are used.

3. ROOT VALVES: Root valves shall be provided at all process taps, except as follows:

a. Temperature taps, where valves are unnecessary.

b. Pump discharge pressure taps where no instrument is permanently installed. Isolation valves shall be provided.

c. Process taps for safety instruments.

d. Where gauge valves are provided.

e. Where chemical seals are used.

4. GAUGE VALVES: Gauge valves shall be provided for each pressure gauge tap except where chemical seals are used.

C. TUBING:

Tubing shall be installed on supports spaced not more than 3 feet apart and shall run parallel of perpendicular to walls structural members, or intersections of vertical planes and the ceiling. Unless otherwise shown, tubing shall follow building surfaces closely or shall be carried in trays or conduit.

Tubing shall not be supported from piping or equipment except at process taps or connections to the device served. Tubes supported directly on concrete surfaces shall be spaced at least 1/8 inch from the concrete. Tubing support shall be one-hole malleable iron clamps with clamp backs as required. Bends shall be formed to uniform radii without flattening.

Ends of tubing shall be square-cut and de-burred before installation in fittings. Fittings shall be used for splices, connections, and turns near final connections. Bulkhead fittings shall be used when tubing enters a panel.

D. ELECTRICAL CONNECTIONS:

Final connections between rigid raceway systems and instruments shall be made with jacketed flexible conduit with a maximum length of 2 feet.

3.02 TESTING

Applicable testing requirements are specified in paragraph 17200-3.02.

3.03 PROCESS CONNECTIONS:

Process connection piping and tubing shall be tested in accordance with Section 15050.

3.04 INSTRUSPECS

Instrument Specification Sheets (INSTRUSPECS) included in this Section 17211 are listed in Table A and specified following the table.

Table A

INSTRUSPEC Symbol	Instrument Description	Instrument Function
FPM	Propeller meter	Flow measurement
PDG	Differential pressure gauge	Pressure measurement
PDI	Differential pressure indicator	Pressure measurement
PG	Pressure gage	Pressure measurement
PG-C	Pressure gage with capillary tube	Pressure measurement
PLG	Low range pressure gage	Pressure measurement
TCE	Thermocouple temperature element	Temperature measurement
TI	Temperature indicator	Temperature measurement
TRE	Resistance temperature insertion type RTD	Temperature element, measurement

3.04 INSTRUMENT SPECIFICATION SHEET--INSTRUSPEC

Instrument Identification: FPM

Instrument Function: Flow measurement

Instrument Description: Propeller meter

Power Supply: N/A

Signal Input: Process

Signal Output: N/A

Process Connection: AWWA class D flanges

Product Data:

General: The flow meter system shall be designed to operate continuously at any flow rate within the rated range. Meter accuracy shall be ± 2% of rate, or better, at any flow from minimum rating to 150% of maximum rating.

The meter shall be wet flow calibrated against a primary standard with an accuracy of ± 0.25% or better, traceable to the U.S. NIS. Comparisons shall be made at or near the minimum flow rating, at mid-range and at or near the

maximum rating. Two certified copies of the calibration results shall be furnished.

Register: The register shall consist of a 6-digit totalizer shall be, and an instantaneous rate of flow indicator. The totalizer and flow rate indicator shall be calibrated in process units. The register shall be hermetically sealed in a die cast aluminum case.

Drive Assembly: The propeller shaft shall be Type 316 stainless steel running in Type 440C stainless steel bearings. The propeller shaft shall be magnetically coupled to the register. The propeller and drive assembly shall be mounted to the meter tube on a flanged connection to allow removal of the assembly without the necessity of removing the tube from the process line. The propeller shall be constructed of high impact plastic.

Meter: The meter tube shall be steel coated inside and out with fusion-bonded epoxy and shall have a maximum working temperature of 160 deg. F and a maximum working pressure of 150 psig. The meter tube shall be equipped with integral straightening vanes.

Execution:

Installation: Install in accordance with manufacturer's instructions, paragraph 17200-3.01, and the specified functional requirements.

Test: In accordance with paragraph 17200-3.02.

Application/ Calibration: Application, calibration, and set points shall be as specified in paragraph 17200-3.03.

Propeller flow meter manufacturers:
1. McCrometer model MW500
2. Sparling equal
3. or equal.

3.04 INSTRUMENT SPECIFICATION SHEET--INSTRUSPEC

Instrument Identification: PDG

Instrument Function: Pressure measurement

Instrument Description:	Differential pressure gauge
Power Supply:	N/A
Signal Input:	Process
Signal Output:	N/A
Process Connection:	1/2-inch female NPT
Product Data:	Pressure differential gauge shall have a 6-inch diameter, 270-degree scale. Sensing unit shall consist of an opposed, matched pair of bellows. Bellows and housing material shall be Type 316 stainless steel unless otherwise specified. Unit shall be capable of withstanding static working pressures of up to 1000 psig without requiring recalibration. Accuracy shall be plus or minus 1 percent of scale. Zero and span shall be field adjustable.
Execution:	
Installation:	Install in accordance with the manufacturer's instructions, paragraph 17200-3.01, and the specified functional requirements.
Test:	In accordance with paragraph 17200-3.02.
Application/ Calibration:	Application, calibration, and set points shall be as specified in paragraph 17200-3.03. Differential pressure gage manufacturers: 1. ITT Barton model 200 for differential ranges up to 400 inches water column or equal. 2. ITT Barton model 227 for differential ranges above 400 inches water column.

3.04 INSTRUMENT SPECIFICATION SHEET--INSTRUSPEC

Instrument Identification:	PDI
Instrument Function:	Pressure measurement
Instrument Description:	Differential pressure indicator
Power Supply:	N/A
Signal Input:	Process
Signal Output:	N/A
Process Connection:	1/8-inch female NPT
Product Data:	Pressure differential indicator shall have a 4-inch diameter, 90-degree scale. Sensing unit shall consist of two pressure-tight compartments separated by a silicone rubber diaphragm. The diaphragm shall be opposed by a calibrated leaf spring. The motion of the spring shall be transferred to the pointer by magnetic coupling. Bearings shall be sapphire. Housing material shall be die cast aluminum with a salt resistant coating. Unit shall be capable of withstanding static working pressures of up to 35 psig. Accuracy shall be plus or minus 2 percent of scale. Zero pointer adjustment shall be accessible from the face.
Execution:	
Installation:	Install in accordance with the manufacturer's instructions, paragraph 17200-3.01, and the specified functional requirements.
Test:	In accordance with paragraph 17200-3.02.
Application/ Calibration:	Application, calibration, and set points shall be as specified in paragraph 17200-3.03. Differential pressure indicator manufacturers: 1. Dwyer Series 2000 Magnehelic 2. or equal.

3.04 INSTRUMENT SPECIFICATION SHEET--INSTRUSPEC

Instrument Identification:	PG
Instrument Function:	Pressure measurement
Instrument Description:	Pressure gage
Power Supply:	N/A
Signal Input:	N/A
Signal Output:	N/A
Process Connection:	1/2-inch male NPT
Product Requirements:	Pressure gages shall be 4-1/2-inch premium grade, glycerin filled units with bourdon tube element, 270-degree milled stainless steel movement, phenolic case, and shatterproof glass window. Accuracy shall be 1 percent of span or better. All exposed metal parts shall be stainless steel. Pressure gage manufactures: 1. Ashcroft Duraguage Figure 1279 2. Ametek 1981L 3. or equal.

Execution:

Installation:	Install in accordance with manufacturer's instructions and the recommendations of API RP551 to the specified requirements. Root valves shall be provided at all process pressure taps except taps made for safety instruments. Gage valves shall be provided at the instrument where the instrument is not within sight of the root valve or where two or more instruments are connected to a single tap. Safety instruments shall not be connected to the same process tap as instruments used for control, indication, or recording. Unless otherwise specified, pressure instruments shall be located as close as practical to the process tap but shall be positioned to permit observation and maintenance.

3.04 INSTRUMENT SPECIFICATION SHEET--INSTRUSPEC

Instrument Identification: PG (continued)

Pressure gages may be supported from the process tap if this location permits observation from the floor or a permanent work platform. Pressure instruments shall be installed in such a manner that blowout discs are not obstructed.

Application/Calibration: Application, calibration, and set points shall be as specified in paragraph 17200-3.03.

3.04 INSTRUMENT SPECIFICATION SHEET--INSTRUSPEC

Instrument Identification: PG-C

Instrument Function: Pressure Measurement

Instrument Description: Gauge Pressure Transmitter with Capillary Tube

Signal Input: Process pressure

Output: Gauge Pressure

Process Connection: 1/2-inch female NPT

Product Requirements: Bourdon Tube Pressure Gauge

304 stainless steel case
316 stainless steel wetted parts

Size:	4”
Accuracy:	1% of calibrated span.
Static Pressure Rating:	2,000 psi.
Window:	Safety glass
Weather Protection:	NEMA 4X
Acceptable Manufacturer:	WIKA, Alnab, or equal

Execution:

Installation: Install in accordance with manufacturer's instructions and the Engineer’s installation detail.

Pressure gage at 5-foot mounting height.

Rigid gage mounting surface: aluminum or stainless steel.

Provide a gage mounting adapter.

Pressure gage shall not be supported from process piping.

Measure capillary tube length to process pipe prior to ordering instrument.

Pressure gage with capillary tubing shall be provided by a single manufacturer with components factory-assembled prior to shipping.

3.04 INSTRUMENT SPECIFICATION SHEET--INSTRUSPEC

Instrument Identification: PG-C (continued)

Capillary option: Fill Fluid: Silicone high temperature oil suitable for boiler pressure monitoring to 750-degrees F.

Capillary Seal Connection Material: Type 316 stainless steel armored sleeve.

3.04 INSTRUMENT SPECIFICATION SHEET--INSTRUSPEC

Instrument Identification: PLG

Instrument Function: Pressure measurement

Instrument Description: Low range pressure gage

Power Supply: N/A

Signal Input: N/A

Signal Output: N/A

Process Connection: 1/2-inch male NPT

Product Requirements: Pressure gages shall be 4-1/2-inch phenolic turret case construction with shatterproof glass window and 270-degree milled stainless steel movement.

Unless otherwise specified, element shall be ASTM A269, Type 316 stainless steel bellows. Gage shall be provided with a porous metal type snubber with ASTM A276, Type 303 stainless steel body and Type 316 stainless steel filter disc.

Pressure gage manufactures: Ashcroft Type 1188, or equal.

Execution:

Installation: Install in accordance with manufacturer's instructions and the recommendations of API RP551 to the specified requirements.

Root valves shall be provided at all process pressure taps except taps made for safety instruments. Gage valves shall be provided at the instrument where the instrument is not within sight of the root valve or where two or more instruments are connected to a single tap.

Safety instruments shall not be connected to the same process tap as instruments used for control, indication, or recording. Unless otherwise specified, pressure instruments shall be located as close as practical to the process tap but shall be positioned to permit observation and maintenance.

3.04 INSTRUMENT SPECIFICATION SHEET--INSTRUSPEC

Instrument Identification: PLG (continued)

Pressure gages may be supported from the process tap if this location permits observation from the floor or a permanent work platform.

Pressure instruments shall be installed in such a manner that blowout discs are not obstructed.

Application/Calibration: Application, calibration, and set points shall be as specified in paragraph 17200-3.03.

3.04 INSTRUMENT SPECIFICATION SHEET--INSTRUSPEC

Instrument Identification: TI

Instrument Function: Temperature measurement

Instrument Description: Temperature indicator

Power Supply: N/A

Signal Input: Process

Signal Output: N/A

Process Connection: 1/2-inch male NPT

Product Requirements: Temperature indicators shall be 4-1/2-inch gas pressure operated bourdon tube elements, 270-degree movement, phenolic case, shatterproof glass window, and 1/2-inch NPT process connection.

Bulb shall be 3 inches long by 3/8-inch diameter for all ranges. Stem lengths shall be selected to place bulb in middle third of pipe. Indicator head shall be swivel mounted to the stem.

Temperature indicator manufacturer:
Ashcroft Duratemp Type 600B, or equal.

Execution:

Installation: Temperature instruments shall be installed in accordance with the manufacturer's instructions and the recommendations of API RP551 to the specified requirements.

For pipelines less than 4-inch diameter, temperature elements shall be installed at a pipeline elbow if possible.

Where an elbow is not available, a wye fitting shall be installed in the pipeline for installation of the temperature element at a 45-degree angle with the flow.

3.04 INSTRUMENT SPECIFICATION SHEET--INSTRUSPEC

Instrument Identification: TLI

Instrument Function: Temperature measurement

Instrument Description: Captive liquid temperature indicator

Signal Input: Process

Process Connection: 1/2-inch male NPT

Product Data: Temperature shall be measured by the expansion or contraction of a liquid, sealed in an evacuated glass capillary tube. Capillary tube shall be housed in a protective, corrosion-resistant case with an unbreakable lucite crystal.

Scale length shall be 12 inches and shall be marked every 2 degrees F. Major scale divisions shall be at 10-degree F. intervals and scale shall be numerically noted at 20-degree F. intervals. Accuracy shall be plus or minus 1 percent of span, or better.

Execution:

Installation: Install in thermowells specified in paragraph 2.05 of this section in accordance with the manufacturer's instructions, paragraph 17200-3.01, and the specified functional requirements.

For pipelines less than 4-inch diameter, thermowell shall be installed in a pipeline elbow if possible. Where elbow is not available, a wye fitting shall be installed in the pipeline

for installation of the thermowell at a 45-degree angle with the flow.

Test: In accordance with paragraph 17200-3.02.

Application/ Calibration: Application, calibration, and set points shall be as specified in paragraph 17200-3.03.

Captive liquid temperature device manufacturers:
1. Taylor model EU85
2. or equal.

3.04 INSTRUMENT SPECIFICATION SHEET--INSTRUSPEC

Instrument Identification: TRE

Instrument Function: Temperature measurement

Instrument Description: Resistance temperature detector element, inserting type

Power Supply: N/A

Signal Input: Process

Signal Output: 100 ohms nominal at 0 degrees C, resistance temperature coefficient of 0.385%/degree C

Process Connection: 1/2-inch male NPT

Product Requirements: Temperature element shall be tip sensitive, three-wire platinum resistance temperature detector (RTD) in 1/4-inch ASTM A269, Type 316 stainless steel sheath with watertight connection head.

Time constant in agitated water shall not exceed 8 seconds. RTD shall comply with ASTM E1137, tolerance Grade A

RTDs for installation in wells shall be provided with spring loading device and union coupler. Union shall extend out beyond pipe lagging.

Three-wire lead configuration for ambient temperature compensation shall be provided. RTD extension cable conductors shall be shielded triads as specified in Division 16.

Bushings and wells for temperature elements shall comply with ASME B40.200 and unless otherwise specified shall be machined from ASTM A276, Type 316 stainless steel bar stock. Union couplers shall be provided for all temperature elements.

3.04 INSTRUMENT SPECIFICATION SHEET--INSTRUSPEC

Instrument Identification: TRE (continued)

Execution:

Installation: Temperature elements shall be installed in accordance with the manufacturer's instructions.

3.04 INSTRUMENT SPECIFICATION SHEET--INSTRUSPEC

Instrument Identification: TSE

Instrument Function: Temperature measurement

Instrument Description: Resistance temperature detector element, surface type

Power Supply: N/A

Signal Input: Process

Signal Output: 100 ohms nominal at 0 degrees C, resistance temperature coefficient of 0.385%/degree C

Process Connection: Strap or bond to vessel

Product Requirements: Temperature element shall be a three-wire platinum resistance temperature detector (RTD) in a flexible watertight case for attaching to a pipe surface.

RTDs shall comply with ASTM E1137, tolerance Grade A.

RTD extension cable shall be shielded triads as specified in Section 16120.

Execution:

Installation: Temperature instruments shall be installed in accordance with the manufacturer's instructions.

Pad type temperature elements shall be bonded to the pipe per manufacturer's instructions and the pipe insulated for not less than 2 feet upstream and downstream of the temperature element.

Pipe insulation shall comply with Section 15250.

END OF SECTION

SECTION 17212

TRANSMITTERS

PART 1--GENERAL

1.01 DESCRIPTION

This section specifies requirements for process parameter transmitters, associated indication devices, and accessories.

The application requirements are specified in the Instrument Index - Section 17200.

1.02 REFERENCES

References shall be as specified in Section 17000.

1.03 SUBMITTALS

Submittals shall be provided as specified in Sections 01300 and 17000, including:

1. A copy of this specification section, with addendum updates included, and all referenced and applicable sections, with addendum updates included, with each paragraph check-marked to indicate specification compliance or marked to indicate requested deviations from specification requirements. Referenced and applicable sections to be marked up and submitted include:

    a. Section 01664 - TRAINING

    b. Section 01730 - OPERATING AND MAINTENANCE INFORMATION

    c. Section , 17000 - GENERAL REQUIREMENTS FOR INSTRUMENTATION AND CONTROL

    d. Section 17200 - INSTRUMENT INDEX

    A <u>check mark</u> shall denote full compliance with a paragraph as a whole. If deviations from the specifications are indicated, and therefore requested by the Contractor, each deviation shall be underlined and denoted by a number in the margin to the right of the identified paragraph, referenced to a detailed written explanation of the reasons for requesting the deviation. The Construction Manager shall be the final authority for determining acceptability of requested deviations. The remaining portions of the paragraph not underlined will signify compliance on the part of the Contractor with the specifications. *Failure to include a copy of the*

marked-up specification sections, along with justification(s) for any requested deviations to the specification requirements, with the submittal shall be sufficient cause for rejection of the entire submittal with no further consideration.

2. A copy of the contract document Control Diagrams and Process and Instrumentation Diagrams relating to the submitted equipment, with addendum updates that apply to the equipment in this section, marked to show specific changes necessary for the equipment proposed in the submittal. If no changes are required, the drawing or drawings shall be marked *"no changes required"*. *Failure to include copies of the relevant drawings with the submittal shall be cause for rejection of the entire submittal with no further review.*

3. Marked Contract Document Mechanical and/or Electrical Plan drawings, sections, and details showing sensor installation locations and details. *Failure to include copies of the relevant drawings with the submittal shall be cause for rejection of the entire submittal with no further review.*

4. Marked product literature of all equipment and features to be provided.

5. Installation drawings for only the transmitters, sensors, and mounting accessories to be provided.

6. Electrical and signal connection drawings for only the transmitters and sensors to be provided.

7. List of miscellaneous items, cables, spare parts, that will be provided in accordance with INSTRUSPEC sheet requirements.

8. Marked product literature for surge protectors.

PART 2--PRODUCTS

2.01 GENERAL

Measuring elements and transmitters shall comply with the following requirements:

1. Measured parameter output indicators complying with paragraph 17212-2.02 shall be provided with any transmitter that does not include an integral indicator. Indicators, whether integral or separate, shall be calibrated in process units, and engraved on the indicator scale plate.

2. The two-wire type transmitters shall have operating power derived from the signal transmission circuit.

3. Transmitters shall meet specified performance requirements with load variations within the range of 0 to 600 with the power supply at a nominal 24 volts DC with the default range of 0 to 100% corresponding to 4 to 20 madc.

4. Transmitter output shall increase with increasing measurement.

5. Time constant shall be adjustable from 0.5 to 5.0 seconds for transmitters used for flow, level transmitters used for flow measurement, or pressure measurement.

6. Transmitter output shall be galvanically isolated via electro-mechanical or optical technology.

7. Transmitter enclosures shall be rated NEMA 250, Type 4, unless otherwise specified.

8. Transmitters and Analyzers located outdoors shall be provided with surge protectors:

   a. Signal: Emerson/Rosemount Model 470 D, Emerson/EDCO SS64-036-2, CCI SPN-42 FS28 Series, or accepted equal.

   b. AC Power: UL 1449, LED indicator, screw terminal connections, NEMA 4X. EDCO HSP121A or accepted equal.

9. Two-wire transmitter located in a facility area classified as hazardous per the NFPA and the NEC shall be made safe by means of an intrinsic safety barrier as specified in paragraph 17212-2.03.

10. Four-wire transmitters shall be isolated from the process and power or provided with a loop-powered signal current isolator as specified in paragraph 17212-2.05 connected in the output signal circuit.

2.02 PROCESS PARAMETER OUTPUT INDICATOR

Provide digital LED or LCD indicators that integral to the instrument housing where available from the manufacturer. Displays shall be scaled in engineering units, over the calibrated range of the instrument. Calibrate the indicator scale in process units.

Analog output indicators shall be 2.5-inch milli-ammeter with 90-degree movement enclosed in a NEMA 7/9 rated meter case. Provide indicators with accuracy within two percent of span. Provide a diode to maintain loop continuity for indicator removal.

2.03 INTRINSIC SAFETY BARRIERS

Intrinsic safety barriers for two-wire transmitters shall be of the active, isolating, loop powered type. Barrier shall be Measurement Technology LTD Type MT3042, Stahl Series 9000, Accepted equal.

2.04 INSTRUMENTATION SPECIFICATION SHEETS (INSTRUSPEC)

General requirements for instruments specified in this section are listed on INSTRUSPEC sheets in paragraph 17212-3.03.

Application requirements are specified in the Instrument Index, paragraph 17200-2.03, and/or on the drawings.

2.05 SIGNAL CURRENT ISOLATOR

Isolator shall provide galvanic isolation of milliampere transmission signals from transmitters. Isolator shall be housed in a NEMA 250, Type 4/7 conduit body and derive operating power from the signal input circuit.

Input and output signals shall be 4 to 20 milliamperes, and error shall not exceed 0.1 percent of span. Input resistance shall not exceed 550 ohms with an output load of 250 ohms.

Isolator shall be Moore Industries SCX 4-20madc to 4-20madc / 5.5VPL / -RF DIN rail mounted with maximum 250 ohm output impedance, or equal.

2.06 PRODUCT DATA

The following data provided in accordance with Section 01300:

1. Operating and maintenance information as specified in paragraph 17000-2.03. Include final reviewed submittal and separate record of all final configuration, jumper, and switch settings for each transmitter.

2. Test results as specified in Section 17030-Part 2.

PART 3--EXECUTION

3.01 INSTALLATION

Installation requirements are specified in paragraph 17000-3.01.

3.02 TESTING

Testing requirements are specified in Section 17030.

3.03 INSTRUMENT SPECIFICATION (INSTRUSPEC) SHEETS

General requirements for instruments specified in this section are listed on INSTRUSPEC sheets herein. Application requirements are specified in the Instrument Index, paragraph 17200-3.03, and/or on the drawings. INSTRUSPEC sheets for the transmitters listed in the following Table A are included in this paragraph:

Table A. Process Monitors and Indicating Transmitters

INSTRUSPEC Symbol	Instrument Description	Instrument Function
FDU	Doppler Ultrasonic Flow Transmitter	Flow Measurement
FM	Magnetic Flow Transmitter	Flow Measurement
FTD	Thermal Dispersion Flow Transmitter	Flow Measurement
FTD2	Thermal Dispersion Flow Transmitter	Digester Gas Flow Measurement
LFT	Flange Mounted Diaphragm Level Transmitter	Wastewater Level Measurement
LST2	Submerged Diaphragm Level Transmitter	Wastewater Level Measurement
LUT	Ultrasonic Level Transmitter	Level Measurement
PDT	Differential Pressure Transmitter	Pressure Measurement
PGT	Gage Pressure Transmitter	Pressure Measurement
TMP	Temperature Transmitter	Temperature Measurement

3.03 INSTRUMENT SPECIFICATION SHEET--INSTRUSPEC

Instrument Identification:	FM
Instrument Function:	Flow Measurement
Instrument Description:	Magnetic Flow Metering System
Signal Input:	Process
Signal Output:	Analog signal as specified in paragraph 17212-2.01 HART Protocol
Process Connection:	Flange, ANSI B16.5, Class **150**, raised face.
Product Requirements:	Magnetic flow meter provided as a system consisting of a flow tube with separate or integral converter / indicating transmitter, as scheduled in the Section 17200 Instrument Index, complete with interconnecting cables Remote mounted indicating transmitter for full-scale flow rates from 1.0 to 30 feet per second. System error shall not exceed the greater of 0.5 percent of flowrate or 0.1 foot per second from 3 to 30 feet per second.
Flow Tube:	Flow tubes manufacturer shall provide grounding rings fabricated from the same metal as for the electrodes below. Flow tube sizes below 2 inches may be wafer-style ductile-iron or full-body flanged construction. Electrodes: 316L stainless steel unless otherwise specified in Section 17200. Flow tubes installed in areas with potential for flooding shall be IP68 rated for submergence.

3.03 INSTRUMENT SPECIFICATION SHEET--INSTRUSPEC

Instrument Identification: FM (continued)

Liner: Polyurethane unless otherwise specified in Section 17200.

Transmitter: Contain electronics associated with the magnetic flow meter system. Enclosure rating NEMA-4, cast aluminum or metal compartment for power, field connections and calibration adjustments separate from digital circuitry.

Means to calibrate the metering system without use of external calibration units. Transmitter self-diagnostics. Traceability certificate of actual flow lab certification provided with each flowtube.

Integral 4-digit LCD flow indication calibrated in process units. Data retained in non-volatile memory.

Internal circuitry to drive flow signal to zero upon flow meter determined empty pipe condition

Execution:

Installation: Install in accordance with manufacturer's instructions and the specified functional requirements.

Cable: Signal cable between the flow tube and transmitter provided by the system manufacturer with sufficient length of cable for continuous installation between the flow tube and the transmitter.

Manufacturers:

ABB Magmaster MFE
Endress + Hauser Promag 50W/53W
Krohne Optiflux 4000
Accepted equal.

3.03 INSTRUMENT SPECIFICATION SHEET--INSTRUSPEC

Instrument Identification:	FTD
Instrument Type:	Flow Measurement
Instrument Description:	Thermal Dispersion Flowmeter
Power Supply:	120 Vac, 60-Hertz nominal or 24 Vdc as specified in 17200 Instrument Index
Signal Input:	Process
Signal Output:	4 to 20 milliamperes into 0 to 600 ohms, galvanically isolated, HART protocol.
Process Connection:	0.75-inch male NPT
Product Requirements:	Flow indicating transmitter mounted remotely or integral with the flow element, as scheduled in Section 17200 Instrument Index, with LCD flowrate display and totalized flow display. Provide continuous interconnecting cable and mounting hardware. Convert resistance difference to gas flow rate with a maximum error of ±1 percent of reading + 0.5% of full scale. Transmitter housed in a NEMA 4X enclosure and rated for a minimum temperature range of 0 to 140 degrees F. Sensing element shall consist of two matched platinum resistance temperature elements, one heated and the other passive sheathed in a nickel brazed 316 stainless steel insertion assemblies. Element suitable for gas flow velocities from 0.5 to 50 actual feet per second, gas temperatures of -40 to +350 degrees F, static pressures from full vacuum to 300 psig, process pipes 1-inch diameter and larger.

3.03 INSTRUMENT SPECIFICATION SHEET--INSTRUSPEC

Instrument Identification: FTD (continued)

Flow conditioner, flow element, and flow transmitter provided and calibrated as a unit from the manufacturer. Flow conditioner shall match the process piping schedule, material, and end-connection pressure service rating.

Manufacturer shall provide NIST testing and certification documentation for 20, 40, 60, 80 and 100% of the expected flow rate, as provided by the Engineer.

Thermal dispersion flow transmitter manufacturer:
- Fluid Components, Inc., ST98
- Central Station Steam CTFT series
- Accepted equal.

Flow conditioner:
- VORTAB VMR
- Accepted equal.

Execution:

Installation: Install flowmeter per manufacturer's instructions and Engineer's installation detail.

Install flow conditioners per manufacturer's instructions and piping specifications, including gasket material and bolt torque requirements.

Test: In accordance with paragraph 17010-3.02.

3.03 INSTRUMENT SPECIFICATION SHEET--INSTRUSPEC

Instrument Identification:	FTD2
Instrument Type:	Digester Gas Flow Measurement
Instrument Description:	Thermal Dispersion Flowmeter
Power Supply:	120 Vac, 60-Hertz nominal
Signal Output:	4 to 20 milliamperes into 0 to 500 ohms, galvanically isolated, HART protocol
Process Connection:	Flanged, ANSI B16.5, Class 150, raised face
Product Requirements:	Flow measuring system with accuracy of within 1% of full scale, repeatability of 0.5 % of reading.
Flow Measuring System:	Flow measuring system manufacturer provided flow body including reducer, measuring section, and diffuser. Straightening vanes or other flow obstructing devices are not acceptable. Section material and flanges of 316 SS, with all connections welded internally and externally and ground smooth. Measuring section shall be designed for maximum 0.25 inch of water column pressure drop at maximum flow stated in Section 17200. Operating pressures: 16 to 20 inches of water column, maximum 28 inches. Operating temperatures: 45 to 120 degrees F. Gas is primarily Methane from Anaerobic Digesters: Methane Gas (CH_4) 70 percent, Carbon Dioxide (CO_2) 25 percent, Nitrogen (N_2) partial, Hydrogen (H_2) partial, Hydrogen Sulfide (H_2S) partial, Water vapor (H_2O) partial, other gases partial. Reducer and diffuser shall be eccentric for horizontal piping runs to prevent condensate buildup, with fitting for flow sensor aligned toward lower 180 degrees of the measuring section. Coordinate sensor fitting location to allow for sensor removal. Reducer and diffuser shall be concentric for vertical piping. Provide upstream and downstream test gas ports with plugs for maintenance calibration verification. Refer to Mechanical drawings for piping

3.03 INSTRUMENT SPECIFICATION SHEET--INSTRUSPEC

Instrument Identification:	FTD2 (continued) Submit calculations and dimensioned layout drawings prior to fabrication. Provide clear, permanent marking of measuring section tag number, matched to flow sensor.
Sensor:	Sensing element shall consist of two matched platinum resistance temperature elements, one heated and one passive and both sheathed in a alloy C-276 insertion assembly, all welded construction, to operate as a constant temperature thermal anemometer. Element suitable for gas flow velocities from 0.25 to 200 standard feet per second, with 1” MNPT connection, “hot-tap” mounting hardware including full-port ball valve of 316 SS materials. NEMA 7 enclosure. Insertion element designed to prevent twisting or insertion depth changes due to Class I Division 1 or other flexible conduit installations. Provide manufacuturer pre-marked sensor insertion depth. Submit and provide scaled drawings with each measuring section/sensor pair shipment.
Transmitter:	Remote mounted, NEMA 4X, with LCD flowrate and totalized flow display. Provide factory flow calibration with matching flow sensor and transmitter. Thermal dispersion flow transmitter manufacturer: Kurz Instruments, Inc., 452, 155JR Accepted equal.
Calibration:	Factory certified calibration report for range shown in Section 17200.

3.03 INSTRUMENT SPECIFICATION SHEET--INSTRUSPEC

Instrument Identification:	FTD2 (continued)
Measuring Section:	316 Stainless steel matching thickness of gas piping system, flanged connector, reducer and diffuser; eccentric on horizontal piping, concentric on vertical piping, with test gas connections and plugs on upstream and downstream end: Kurz Instruments, Inc. 550E Accepted equal.
Execution:	
Installation:	Install flowmeter per manufacturer's instructions and the specified functional requirements. Signal cable between the flow sensor and transmitter shall be provided by the system manufacturer with sufficient length of cable for continuous installation without splices. Horizontal measuring sections to be installed so bottom inside of pipe and reduced pipe is flat to prevent build-up of condensation at eccentric reducers. Sensor to be inserted 45 degrees from bottom center of reduced pipe.

3.03 INSTRUMENT SPECIFICATION SHEET--INSTRUSPEC

Instrument Identification:	LFT
Instrument Function:	Level Measurement
Instrument Description:	Flange Mounted Diaphragm Level Transmitter
Power Supply:	As specified in paragraph 17212-2.01
Signal Input:	Process
Signal Output:	As specified in paragraph 17212-2.01
Process Connection:	3-inch flange, ANSI B16.5, Class 150, raised face
Product:	Pressure Transmitter: Capacitance or piezoresistive. Wetted parts: Type 316 stainless steel or as specified in Section 17200 Instrument Index. Range: 100:1. Accuracy: 0.075 percent of calibrated span. Static pressure rating: 2,000 psi. Indicator: LCD display. HART data communication protocol Acceptable Manufacturer: Rosemount 3051L. Yokogawa EJA210A or EJA220A. Central Station Steam CWL Series Accepted equal.

Execution:

Installation:	Install in accordance with manufacturer's instructions and the Engineer’s installation detail. Safety instruments shall not be connected to the same process tap as instruments used for control, indication, or recording. Pressure instruments for use with integral seals, or remote seals and capillary tubing provided by a single manufacturer, and components factory-assembled prior to shipping.

Instrument Identification: LFT (continued)

Seals:

Diaphragm and Wetted Parts: Type 316L stainless steel unless otherwise specified in Section 17200.

Process Connection: 3-1/2 inch saddle style, pancake, or flush flanged as required by the application.

Upper Housing/Mounting Flange: Type 316L stainless steel
Lower Housing: Type 316 stainless steel
Temperature Limits: -40 to 300 degrees F

Acceptable Manufacturer:
Rosemount 1199.
Yokogawa EJA series.
Accepted equal.

Capillary option:

Seal Location: High pressure side of transmitter, direct mounting

Fill Fluid: DC 200 Silicone

Capillary Seal Connection Material: Type 316 stainless steel armored sleeving

Execution:

Installation:

Install in accordance with manufacturer's instructions as specified on the drawings.

Calibration:

Differential pressure transmitters in level service on pressurized tanks:

Install the diaphragm seals at the proper elevations.

Zero the transmitter on an empty tank open to the atmosphere.

3.03 INSTRUMENT SPECIFICATION SHEET--INSTRUSPEC

Instrument Identification:	LST2
Instrument Function:	Level Measurement
Instrument Description:	Submerged Level Transmitter and Meter - Wastewater
Power Supply:	24 Vdc Loop Powered
Signal Output:	4 to 20 milliamperes into 0 to 550 ohms , HART protocol
Process Connection:	Submerged, suspended
Product Requirements:	
Sensor/Transmitter:	Minimum 3” large diameter diaphragm with 316 Stainless Steel housing and separate suspension cable. FM Approved for Class I Division 1 when used with approved barrier. Accuracy of 0.25% of full scale and operating temperature from -25°F to 180°F. Cable is shielded and includes vent tube. Separate junction box with built-in breather assembly. Provide cable length to reach junction box without splicing. Manufacturers: Blue Ribbon Corp. Model BC001. Delta Controls Corp. Model 566Y. Endress+Hauser DB53A. Siemens Model A1000i. Accepted equal.
Meter:	NEMA 4X enclosure, surface mount, 120Vac, power. Accepts , 4-20 mA DC (from transmitter), outputs 4-20 mA DC isolated into a minimum of 500 Ω. LCD display with digital scalable process level indicator. Manufacturers: Delta Controls Corp. Endress+Hauser. Siemens Model HydroRanger 200. Accepted equal.

3.03 INSTRUMENT SPECIFICATION SHEET--INSTRUSPEC

Instrument Identification: LST2 (continued)

Execution:

Installation: Install in accordance with manufacturer's instructions.

Manufacturer to provide sensor/transmitter, full length cables, and meter.

Calibration: In accordance with Section 17200-3.02

3.03 INSTRUMENT SPECIFICATION SHEET--INSTRUSPEC

Instrument Identification: LUT

Instrument Function: Level Measurement

Instrument Description: Ultrasonic Level Transmitter

Power Supply: 120 Vac, 60-Hertz nominal or
24 Vdc Loop Powered
as specified in 17200 Instrument Index

Signal Input Process

Signal Output: As specified in paragraph 17212-2.01

Process Connection: As shown or specified

Signal Converter / Indicating Transmitter:

Processor: Selectable algorithims for level, volume, or flow.
Flow: Parshall Flume, Weir, or configurable flow device.

Indicator: 4-digit LCD with 0.50-inch display, scaled in engineering units.
Accuracy: 0.25% of level range.
Analog Outputs: Two 4-20 mA into a minimum of 600Ω.
Discrete Outputs: Two Form-C rated at 5A, 250 Vac.

Enclosure**:** NEMA 4X wall mount

Accessories:
Mounting hardware and cable glands.
Removable Handheld infrared programming device
Programming software and cable length as required.
Ports: none

Acceptable Manufacturer:
Milltronics Hydroranger 200.
Central Station Steam CPS Series.
Accepted equal.

3.03 INSTRUMENT SPECIFICATION SHEET--INSTRUSPEC

Instrument Identification:	LUT (continued)
Sensor:	Measuring range: 1 to 33 feet Beam Angle: 6° Pressure Limit: 30 psi Temperature Limits: -40 to +175°F. Wetted Materials: PVDF Cable: #16 to #20 TSP with PVC jacket Maximum Sensor/Transmitter Separation: 1200 ft. Rating: Class I, Div. 1, Groups A, B, C & D.
Execution:	
Installation:	Install in accordance with manufacturer's instructions and the Engineer's installation detail. Contractor to verify size and type of specified tank connection with approved tank submittals. Transducer rigidly mounted approximately two feet above maximum liquid level and accurately leveled. Transmitter wall or stand mounted as specified.
Calibration:	System calibrated in accordance with Section 17200-3.02.

3.03 INSTRUMENT SPECIFICATION SHEET--INSTRUSPEC

Instrument Identification:	PDT
Instrument Function:	Pressure Measurement
Instrument Description:	Differential Pressure Transmitter
Power Supply:	As specified in paragraph 17212-2.01
Signal Input:	Process
Signal Output:	Analog transmission signal as specified in paragraph 17212-2.01, HART protocol
Process Connection:	Two 1/2-inch female NPT flange adapters
Product Requirements:	Pressure Transmitter: Capacitance or piezoresistive type. Wetted Parts: Type 316 stainless steel or as specified in Section 17200 Instrument Index. Range: 100:1. HART standard data communication protocol. Accuracy: 0.075 percent of calibrated span. Static Pressure Rating: 2,000 psi Indicator: LCD display. Acceptable Manufacturer: Rosemount 3051CD. Central Station Steam CPLD Series. Accepted equal.

Execution:

Installation:	Install in accordance with manufacturer's instructions and the Engineer’s installation detail. Root valves provided at all process pressure taps. Gauge valves provided at the instrument where the instrument is not within sight of the root valve or where two or more instruments are connected to a single tap. Safety instruments shall not be connected to the same process tap as instruments used for control, indication, or recording.

3.03 INSTRUMENT SPECIFICATION SHEET--INSTRUSPEC

Instrument Identification:	PDT (continued) Pressure instruments located as close as practical to the process tap and be positioned to permit observation and maintenance. Pressure instruments shall not be supported from process piping. Pressure instruments for use with integral seals, or remote seals and capillary tubing provided by a single manufacturer with components factory-assembled prior to shipping.
Seals:	Type: Diaphragm Process Connection: 3-1/2 inch saddle style, pancake, or flush flanged as required by the application. Diaphragm and Wetted Parts: Type 316L stainless steel unless otherwise specified in Section 17200. Upper Housing and Mounting Flange: Type 316L stainless steel. Lower Housing: Type 316 stainless steel Temperature Limit, High Side: -40 to 300 degrees F Acceptable Manufacturer: Rosemount 1199. Accepted equal.
Capillary Option:	Seal Location: High pressure side of transmitter, direct mounting Fill Fluid: DC 200 Silicone Capillary Seal Connection Material: Type 316 stainless steel armored sleeving

3.03 INSTRUMENT SPECIFICATION SHEET--INSTRUSPEC

Instrument Identification:	PGT
Instrument Function:	Pressure Measurement
Instrument Description:	Gage Pressure Transmitter
Power Supply:	As specified in paragraph 17212-2.01
Signal Input:	Process
Signal Output:	Analog transmission signal as specified in paragraph 17212-2.01
Process Connection:	1/2-inch female NPT flange adapter
Product Requirements:	Pressure Transmitter: Capacitance or piezoresistive type. Wetted Parts: Type 316 stainless steel or as specified in Section 17200 Instrument Index. Range: 100:1. Accuracy: 0.075 percent of calibrated span. Static Pressure Rating: 2,000 psi. Indicator: LCD display. HART standard data communication protocol Acceptable Manufacturer: Rosemount 3051CG. Accepted equal.

Execution:

Installation:	Install in accordance with manufacturer's instructions and the Engineer's installation detail. Root valves provided at all process pressure taps. Gauge valves provided at the instrument where the instrument is not within sight of the root valve or where two or more instruments are connected to a single tap. Safety instruments shall not be connected to the ame process tap as instruments used for control, indication, or recording.

3.03 INSTRUMENT SPECIFICATION SHEET--INSTRUSPEC

Instrument Identification:	PGT (continued) Pressure instruments located as close as practical to the process tap and be positioned to permit observation and maintenance. Pressure instruments shall not be supported from process piping. Pressure instruments for use with integral seals, or remote seals and capillary tubing provided by a single manufacturer, and all components factory-assembled prior to shipping.
Seals:	Type: Diaphragm, Process Connection: 3-1/2 inch saddle style, flush urface or inline style. Diaphragm and Wetted Parts: Type 316L stainless steel unless otherwise specified. Upper Housing and Mounting Flange: Type 316L stainless steel. Lower Housing: Type 316 stainless steel Temperature Limit, High Side: -40 to 300 degrees F Acceptable Manufacturer: Rosemount 1199. Accepted equal.
Capillary option:	Seal Location: High pressure side of transmitter, direct mounting. Fill Fluid: DC 200 Silicone Capillary Seal Connection Material: Type 316 stainless steel armored sleeving

3.03 INSTRUMENT SPECIFICATION SHEET--INSTRUSPEC

Instrument Identification:	TMP
Instrument Function:	Temperature Measurement
Instrument Description:	Temperature Transmitter
Power Supply:	As specified in paragraph 17212-2.01
Signal Input:	Process temperature monitored by RTD
Signal Output:	Analog transmission signal as specified in paragraph 17212-2.01, HART protocol
Process Connection:	Integral or remote mounting to sensor and thermowell, as specified in 17211.
Product Requirements:	Temperature Transmitter: 2-wire device, powered from the PLC analog input power supply. Temperature Limits: 0-160°F. Humidity Limits: 0-100% RH. Accuracy: 0.25°F + 0.02% span, using 100 Ohm Platinum RTD. Output: One isolated 4-20 mA into a maximum of 600Ω. Sensor update time: 0.5 seconds. Failure mode: transmitter shall have a configurable failure mode to drive the analog signal either high (>21 mA) or low (<3.75 mA) in the event of microprocessor failure. Rating: NEMA 4X or as specified in 17200 Instrument Index. Indicator: LCD display. Acceptable Manufacturer: Rosemount 3144P. Central Station Steam CSTMP Series. Accepted equal.

3.03 INSTRUMENT SPECIFICATION SHEET--INSTRUSPEC

Instrument Identification: TMP (continued)

Execution:

Installation: Install in accordance with manufacturer's instructions and the Engineer’s installation detail.

END OF SECTION

SECTION 17215

PROCESS FLUID ANALYZERS

PART 1--GENERAL

1.01 DESCRIPTION

This section specifies requirements for process fluid analyzer indicating transmitters.

1.02 REFERENCES

References shall be as specified in Section 17000.

1.03 SUBMITTALS

Submittals shall be provided as specified in Sections 01300 and 17000, including:

2. A copy of this specification section, with addendum updates included, and all referenced and applicable sections, with addendum updates included, with each paragraph check-marked to indicate specification compliance or marked to indicate requested deviations from specification requirements. Referenced and applicable sections to be marked up and submitted include:

    a. Section 01664 - TRAINING

    b. Section 01730 – OPERATING AND MAINTENANCE INFORMATION

    c. Section 17000 - GENERAL REQUIREMENTS FOR INSTRUMENTATION AND CONTROL

    d. Section 17200 – INSTRUMENT INDEX

    A check mark shall denote full compliance with a paragraph as a whole. If deviations from the specifications are indicated, and therefore requested by the Contractor, each deviation shall be underlined and denoted by a number in the margin to the right of the identified paragraph, referenced to a detailed written explanation of the reasons for requesting the deviation.

    The Construction Engineer shall be the final authority for determining acceptability of requested deviations. The remaining portions of the paragraph not underlined will signify compliance on the part of the Contractor with the specifications.

Failure to include a copy of the marked-up specification sections, along with justification(s) for any requested deviations to the specification requirements, with the submittal shall be sufficient cause for rejection of the entire submittal with no further consideration.

2. A copy of the contract document Control Diagrams and Process and Instrumentation Diagrams relating to the submitted equipment, with addendum updates that apply to the equipment in this section, marked to show specific changes necessary for the equipment proposed in the submittal.

   If no changes are required, the drawing or drawings shall be marked *"no changes required"*. *Failure to include copies of the relevant drawings with the submittal shall be cause for rejection of the entire submittal with no further review.*

3. Marked Contract Document Mechanical and/or Electrical Plan drawings, sections, and details showing sensor installation locations and details. *Failure to include copies of the relevant drawings with the submittal shall be cause for rejection of the entire submittal with no further review.*

4. Marked product literature of all equipment and features to be provided.

5. Installation drawings for only the analyzers, sensors, and mounting accessories to be provided.

6. Electrical and signal connection drawings for only the analyzers and sensors to be provided.

7. List of miscellaneous items, cables, spare parts, replenishment parts, and chemicals that will be provided in accordance with INSTRUSPEC sheet requirements.

8. List of spare parts available.

1.04 ENVIRONMENTAL CONDITIONS

Refer to Section 17000.

PART 2--PRODUCTS

2.01 MANUFACTURERS

The Owner and Construction Engineer believe the candidate manufacturers listed in the INSTRUSPEC sheets included in this Section are capable of producing equipment and/or products that will satisfy the requirements of this Section. This statement, however, shall not be

construed as an endorsement of a particular manufacturer's products, nor shall it be construed that named manufacturers' standard equipment or products will comply with the requirements of this Section.

2.02 GENERAL

Process fluid analyzers shall comply with the following requirements:

1. Measured parameter output indicators shall be calibrated in process engineering units.

2. Two wire Analyzers shall be 4 to 20 milliampere output with operating power derived from the signal transmission circuit.

3. Transmitter shall support an external load of 0 to 500 ohms with the power supply at a nominal 24 volts DC with the range of 0 to 100% corresponding to 4 to 20 madc.

4. Transmitter output shall be galvanically isolated from the process and the analyzer case.

5. Analyzers located outdoors shall be provided with surge protectors as specified in Section 17212.

6. Transmitter output shall increase with increasing process measurement, except where specified as "reverse action" in the Instrument Index.

7. Electrical parts of analyzer transmitter and/or primary element mechanisms shall housed in enclosures meeting NEMA 250, Type 4 requirements.

8. Electrical equipment and analyzer transmitters located outdoors or in areas specified as corrosive shall have enclosures meeting NEMA 250, Type 4X requirements.

9. Two-wire transmitters, located in a facility hazardous classified area per the NFPA and the NEC, shall be made safe by an intrinsic safety barrier, as specified in paragraph 17212-2.03.

10. Four-wire transmitters shall be isolated from the process and power or be provided with a loop-powered signal current isolator, as specified in paragraph 17212-2.05 and shall be connected in the output signal circuit.

11. One analyzer transmitter shall be provided for each sensor. Dual sensor analyzer capability shall not be utilized.

2.03 PRODUCT DATA

The following data shall be provided in accordance with Section 01300:

1. Operating and maintenance information as specified in paragraph 17000-2.03. Include final reviewed submittal and separate record of all final configuration, jumper, and switch settings for each analyzer.

2. Test results as specified in Section 17030-Part 2.

PART 3--EXECUTION

3.01 INSTALLATION

Installation requirements are specified in paragraph 17000-3.01.

3.02 TESTING

Testing requirements are specified in Section 17030.

3.03 TRAINING

Training requirements are specified in Sections 01664 and 17000. Provide two training sessions, each with one hour per type of Analyzer.

3.04 INSTRUMENTATION SPECIFICATION (INSTRUSPEC) SHEETS

General requirements for instruments specified in this section are listed on INSTRUSPEC sheets herein. Application requirements are specified in the Instrument Index, paragraph 17200-3.03, and/or on the drawings.

INSTRUSPEC sheets for the analyzers listed in the following Table A are included in this paragraph:

Table A. List of Process Fluid Analyzer Indicating Transmitters

INSTRUSPEC Symbol	Analyzer Description	Instrument Function
ADO	Dissolved Oxygen Analyzer	Analyzer Indicating Transmitter
AH	Hydrogen-ion Analyzer (pH)	Analyzer Indicating Transmitter
AOR	Oxygen Reduction Potential Analyzer	Analyzer Indicating Transmitter
CLR	Chlorine Residual Analyzer	Analyzer Indicating Transmitter
NH3	Amonia Analyzer	Analyzer Indicating Transmitter
SO	Optical Type Suspended Solids and Turbidity Analyzer	Suspended Solids and Turbidity Measurement Indicting Transmitter

3.04 ADO INSTRUMENT SPECIFICATION SHEET--INSTRUSPEC

Instrument Identification:	ADO
Instrument Description:	Dissolved Oxygen (DO) Analyzer – Optical Type
Power Supply:	120 volts AC
Signal Output:	4 to 20 mA into 0 to 500 ohms, isolated HART Communications protocol Three Form-C relay outputs
Process Connection:	Submersion
Product Requirements:	
Analyzer:	Analyzer transmitter shall be pipe/surface mount, NEMA 4X with integral keypad/display and self-diagnostics, and shall be Hach SC100, or equal.
Sensor:	Dissolved Oxygen measurement shall be made with a replaceable luminescent technology sensor with integral temperature sensor. Sensor shall be Hach LDO.
Sensor Cleaning:	Air Blast System, Hach 57951-00, 120 volts AC.
Replacement Parts:	[One] sensor. One sensor cap for each sensor/analyzer.
Junction Box:	Hach 58670-00.
Extension Cable:	Hach 57962-00.
Mounting Accessories:	Hach 57944-00 pole mount kit.
Execution:	
Installation:	Submersion assemblies shall be suspended in tanks from pole mount kit.
Application/Calibration:	In accordance with paragraph 17200-3.03.
Calibration:	Calibrate with the Owner. Schedule Owner's Lab and maintenance personnel in advance with the Construction Engineer.
Manufacturer Services:	One day per analyzer on-site, minimum two days.

3.04 AH INSTRUMENT SPECIFICATION SHEET--INSTRUSPEC

Instrument Identification:	AH
Instrument Description:	Hydrogen-ion Activity (pH) Analyzer
Power Supply:	120 volts AC
Signal Output:	4 to 20 mA into 0 to 500 ohms, isolated HART Communications protocol Three Form-C relay outputs
Process Connection:	Submersion
Product Requirements:	
Analyzer:	Analyzer transmitter shall be pipe/surface mount, NEMA 4X with integral keypad/display and self-diagnostics, and shall be Hach SC100, or equal.
Sensor:	pH measurement shall be made with a differential glass electrode, titanium ground electrode, integral preamplifier, 15 foot cable, and glass-filled polyetheretherketone (PEEK) body with 1” NPT threading on both ends. Sensor rated 100 psig, 10 fps flow. Sensor shall be Hach / GLI DPD1P1, or equal.
Replenishment Parts:	One salt bridge and one bottle of standard cell solution for each sensor/analyzer.
Junction Box:	Hach / GLI 60A2053, or equal.
Extension Cable:	Hach / GLI 1W1100, or equal.
Calibration Buffers:	Two sets of each of pH 7 and 10 buffers. Use one set for testing/calibration and training, second set for Owner.
Mounting Accessories:	As required for the installation specified on the drawings, provided by sensor Manufacturer.
Execution:	
Installation:	Submersion assemblies shall be suspended in tanks from type 316 stainless steel, 1-inch, Schedule 40 pipe.
Application/Calibration:	In accordance with paragraph 17200-3.03.
Manufacturer Services:	Two hours per analyzer on-site, minimum one day.

3.04 AOR INSTRUMENT SPECIFICATION SHEET--INSTRUSPEC

Instrument Identification:	AOR
Instrument Description:	Oxygen Reduction Potential (ORP) Analyzer
Power Supply:	120 volts AC
Signal Output:	4 to 20 mA into 0 to 500 ohms, isolated HART Communications protocol Three Form-C relay outputs
Process Connection:	Submersion
Product Requirements:	
Analyzer:	Analyzer transmitter shall be pipe/surface mount, NEMA 4X with integral keypad/display and self-diagnostics, and shall be Hach SC100, or equal.
Sensor:	ORP measurement shall be made with a differential glass platinum electrode, titanium ground electrode, integral preamplifier, 15 foot cable, and glass-filled polyetheretherketone (PEEK) body with 1” NPT threading on both ends. Sensor rated 100 psig, 10 fps flow. Sensor shall be Hach / GLI DRD1P5, or equal.
Replenishment Parts:	One salt bridge and one bottle of standard cell solution for each sensor/analyzer.
Junction Box:	Hach / GLI 60A2053, or equal.
Extension Cable:	Hach / GLI 1W1100, or equal.
Calibration Buffers:	Two sets of each of 200 and 600 mV reference solutions. Use one set for testing/calibration and training, second set for Owner.
Mounting Accessories:	As required for the installation specified on the drawings, provided by sensor Manufacturer.
Execution:	
Installation:	Submersion assemblies shall be suspended in tanks from type 316 stainless steel, 1-inch, Schedule 40 pipe.
Application/Calibration:	In accordance with paragraph 17200-3.03.
Manufacturer Services:	Two hours per analyzer on-site, minimum one day.

3.04 CLR INSTRUMENT SPECIFICATION SHEET--INSTRUSPEC

Instrument Identification:	CLR
Instrument Description:	Chlorine Residual Analyzer
Power Supply:	120 volts AC
Signal Output:	4 to 20 mA into 0 to 500 ohms, isolated, HART protocol Three relay outputs, configurable NO or NC
Process Connection:	3/4-inch NPT (1/2-inch sample line)
Product Requirements:	
Analyzer:	Analyzer transmitter shall be surface mount, and shall be specific to [free] [total] chlorine as specified. The sample-flow system shall be composed of plug-in components on a swing-out panel. It shall contain large ports throughout, grit bombardment of the measuring and counter electrodes, continuous metering of reagent chemicals and detergent into the sample, a self-cleaning main orifice and a solenoid valve for automatic back-flushing cycles. A motor-driven impeller shall maintain a constant sample velocity at the measuring electrode. The reagent pump shall be a valve-less, peristaltic type with brushless stepping motor. The analyzer's electronics shall be microprocessor-based with a touch key pad and alphanumeric display. Electronic components shall be housed in NEMA 4X enclosures. Two security-coded menus shall give access to two levels of operation: a scrollable, informative operator's menu with easy change of operating parameters; and a supervisor's set-up menu with instructions and error messages to assure proper operation. On-line and off-line diagnostics shall also be presented for servicing and calibration. The analyzer shall be easily reprogrammed for different measurement ranges.

3.04 CLR INSTRUMENT SPECIFICATION SHEET--INSTRUSPEC

Product Requirements:	CLR[1] (continued)
Analyzer:	Calibration accuracy shall be one percent of full scale; operating range shall be 40:1; and residual-measurement ranges shall be 0-20 mg/l.
Instrument Identification:	Analyzer shall be Siemens/Wallace & Tiernan (W&T) Micro/2000.
Sensor:	Amperometric three electrode measuring cell. The measuring cell shall be of the flow-through type with three dissimilar metal electrodes which shall produce a signal proportional to chlorine residual. The cell shall provide continuous on-line analysis of chlorine residual sensitive to one part per billion (.001 mg/l) and be capable of continuous feedback control of chlorine residual down to ten parts per billion (.01 mg/l). It shall not lose sensitivity due to extended periods of samples containing no chlorine.
Replacement Parts:	One sensor, W&T. One preventive maintenance kit, W&T G2416.
Replenishment Parts:	One bottle of electrolyte for each sensor/analyzer, W&T U28039.
Calibration Buffers:	One carton of four bottles of pH 4 Reagent for each sensor/analyzer, W&T U13765. Two bottles of Potassium Iodide for each sensor/analyzer for measuring total chlorine, W&T U23661.
Execution:	Install and calibrate instrument in accordance with manufacturer's recommendations. Provide additional components as shown and required by the manufacturer: PRV, needle valves, rotameter, strainer, etc.
Application/Calibration:	In accordance with paragraph 17200-3.03. Owner will assist with calibration and provide hand-held test kit.
Manufacturer Services:	Two hours per analyzer on-site, minimum one day.

3.04 SO INSTRUMENT SPECIFICATION SHEET--INSTRUSPEC

Instrument Identification:	NH3
Instrument Function:	Ammonia Measurement
Power Supply:	120 volts AC
Signal Output:	4 to 20 mA into 0 to 500 ohms, isolated, HART protocol
Process Connection:	Insertion
Product Requirements:	
Analyzer:	Analyzer transmitter shall be pipe/surface mount, NEMA 4X with integral keypad/display and self-diagnostics, and shall be Hach SC1000, or equal.
Filter Probe:	Provide a sample filtration and retrieval system. System shall be provided by the instrument manufacturer and powered through the instrument panel. The filter probe shall include a heated hose for retrieval of the sample. Filter probe shall be a Hach Filtrax unit.
Sensor:	Sensor shall measure ammonia with a range of 0.05 to 20 mg/L at an update interval of 5 to 20 minutes. Sensor shall have an accuracy of no less than 0.05 mg/L. Measurement shall be made using a gas sensitive electrode in a reagent type reaction. Measurement shall be made with stainless steel sensor with dual infrared light beam technique using LED light source. Sensor shall be Hach AMTAX SC (insertion).
Replacement Parts:	Provide two sets of reagents per instrument.
Junction Box:	Hach 58670-00.
Extension Cable:	Hach 57962-00.
Mounting Accessories:	Hach LZY286 stand mount kits for Filter probe, Sensor, and analyzer.
Cleaning:	A cleaning solution shall be provided as recommended by the manufacturer.
Execution:	Installation shall be in accordance with the manufacturer's recommendations.

3.04 INSTRUMENT SPECIFICATION SHEET - INSTRUSPEC

Execution: NH3 (continued)

Application/Calibration: In accordance with paragraph 17200-3.03.

Calibration: Calibrate with the Owner. Schedule Owner's Lab and maintenance personnel in advance with the Construction Engineer.

Manufacturer Services: One day per analyzer on-site, minimum three days.

3.04 SO INSTRUMENT SPECIFICATION SHEET--INSTRUSPEC

Instrument Identification: SO

Instrument Function: Suspended Solids and Turbidity - Optical Measurement - Indicating Transmitter

Power Supply: 120 volts AC

Signal Output: 4 to 20 mA into 0 to 500 ohms, isolated, HART protocol

Process Connection: Insertion, 4" Flanged

Product Requirements:

Analyzer: Analyzer transmitter shall be pipe/surface mount, NEMA 4X with integral keypad/display and self-diagnostics, and shall be Hach SC200, or equal.

Sensor: Measurement shall be made with stainless steel sensor with dual infrared light beam technique using LED light source. One photoreceptor detects scattered light/turbidity, accuracy of the greater of 0.01 NTU or less than 1% of reading. A backscatter photoreceptor detects suspended solids, accuracy of less than 5% of reading. Self-cleaning wiper. Sensor shall be Hach SOLITAX Inline SC (insertion).

Replacement Parts: One sensor.
Five wiper blades for insertion sensor, Hach LZX050.

Junction Box: Hach 58670-00.

Extension Cable: Hach 57962-00.

Mounting Accessories: Hach 57384-00 "hot-tap" insertion mount kit.

Calibration: A Calibration Kit shall be provided consisting of a calibration cylinder, two 500 ml 800 NTU solutions, and a sensor bracket, Hach 57330-00. Calibration fluid, 800 NTU, four, Hach 26605-49.

Execution: Installation shall be in accordance with the manufacturer's recommendations.

3.04 INSTRUMENT SPECIFICATION SHEET - INSTRUSPEC

Execution: SO (continued)

Application/Calibration: In accordance with paragraph 17200-3.03.

Calibration: Calibrate with the Owner. Schedule Owner's Lab and maintenance personnel in advance with the Construction Engineer.

Manufacturer Services: One day per analyzer on-site, minimum three days.

END OF SECTION

SECTION 17216

PROCESS SWITCHES

PART 1--GENERAL

1.01 DESCRIPTION

This section specifies requirements for process activated switches, devices, and accessories.

C. SCOPE:

This section specifies requirements for instrumentation devices, which form a part of the process control systems. Application requirements are as specified in the Instrument Index, paragraph 17200-3.03.

D. OPERATING REQUIREMENTS:

The devices specified in this section quantitatively convert the measured variable energy into a form suitable for process measurement and control.

1.02 QUALITY ASSURANCE

A. MANUFACTURER:

Equipment furnished under this section shall be the products of firms regularly engaged in the design and manufacture of such equipment for a minimum of five years.

B. INSTALLER:

Installation, calibration and testing of equipment furnished under this section shall be performed by qualified, skilled, Certified Technicians specified in Section 17000, who are regularly engaged in such activities involving systems of similar complexity.

C. REFERENCES:

References are listed in Section 17000 and are a part of this section as specified and modified.

1.03 ENVIRONMENTAL CONDITIONS

Equipment provided under this section shall be suitable for operation under ambient conditions described in paragraph 17000-1.03.

1.04 SUBMITTALS

Submittals shall be provided as specified in Sections 01300 and 17000, including:

3. A copy of this specification section, referenced and applicable sections, with addendum updates included and with each paragraph check-marked to indicate specification compliance or marked to indicate requested deviations from specification requirements. Referenced and applicable sections to be marked up and submitted include:

    a. Section 01664 - Training

    b. Section 01730 - Operating and Maintenance Information

    c. Section 17000 - General Requirements for Instrumentation and Control

    d. Section 17200 - Instrument Index

    A check mark shall denote full compliance with a paragraph as a whole. If deviations from the specifications are indicated, and therefore requested by the Contractor, then each deviation shall be underlined and denoted by a number in the margin to the right of the identified paragraph, referenced to a detailed written explanation of the reasons for requesting the deviation.

    The Construction Engineer shall be the final authority for determining acceptability of requested deviations. The remaining portions of the paragraph not underlined will signify compliance on the part of the Contractor with the specifications.

    Failure to include a copy of the marked-up specification sections, along with justification(s) for any requested deviations to the specification requirements, with the submittal shall be sufficient cause for rejection of the entire submittal with no further consideration.

2. A copy of the contract document Control Diagrams and Process and Instrumentation Diagrams relating to the submitted equipment, with addendum updates that apply to the equipment in this section, marked to show specific changes necessary for the equipment proposed in the submittal.

    If no changes are required, the drawing or drawings shall be marked "no changes required". *Failure to include copies of the relevant drawings with the submittal shall be cause for rejection of the entire submittal with no further review.*

3. Marked Contract Document Mechanical and/or Electrical Plan drawings, sections, and details showing sensor installation locations and details. *Failure to include copies of the relevant drawings with the submittal shall be cause for rejection of the entire submittal with no further review.*

4. Marked product literature of all equipment and features.

5. Installation details for the process switches and mounting accessories.

6. Electrical and signal connection drawings for process switches and devices.

PART 2--PRODUCTS

2.01 GENERAL

Process switches and devices shall comply with the following requirements:

1. Contact outputs used for alarm actuation shall be normally-closed or normally-opened as required by the process condition to open to initiate the alarm.

2. Contact outputs used to control equipment shall be normally-opened and shall close to start the equipment.

3. Contacts monitored by solid state equipment such as programmable controllers or annunciators shall be hermetically sealed and rated for switching currents from 20 to 100 mA at 24 volts DC.

4. Contacts, monitored by electromagnetic devices such as mechanical relays, shall be rated as NEMA ICS 2, designation B300.

5. Double barriers provided between switch elements and process fluids such that failure of one barrier will not permit process fluids into electrical enclosures.

6. Switch electrical enclosures rated as NEMA 250, Type 4 minimum.

7. Switch contacts located in Class I, Division 1 areas and monitored by solid-state circuits shall be made safe by intrinsic safety barriers as specified in paragraph 17120-2.04.

8. Switch range shall be selected so that the specified set point is at least 30 percent but not more than 70 percent of the span, between the upper range limit and the lower range limit.

2.02 INSTRUMENTATION SPECIFICATION SHEETS (INSTRUSPEC)

General requirements for instruments specified in this section are listed on INSTRUSPEC sheets in paragraph 17216-3.03.

Application requirements are specified in the Instrument Index, paragraph 17200-3.03, and/or on the drawings.

2.03 PRODUCT DATA

The following data shall be provided in accordance with Section 01300:

1. Operating and maintenance information as specified in paragraph 17000-2.03. Include final reviewed submittal and separate record of all final and switch settings.

2. Test results as specified in Section 17030-Part 2.

PART 3--EXECUTION

3.01 INSTALLATION

Installation requirements are specified in paragraph 17000-3.01.

3.02 TESTING

Testing requirements are specified in Section 17030.

3.03 INSTRUMENT SPECIFICATION (INSTRUSPEC) SHEETS

General requirements for instrumentation specified are listed on INSTRUSPEC sheets herein. INSTRUSPEC sheets for the process switches listed in the following Table A are included in this paragraph:

Table A: Process Switches

INSTRUSPEC Symbol	Instrument Description	Instrument Function
FTS	Thermal Flow Switch	Flow Measurement
LCS	Conductance Level Switch	Level Measurement
LFS	Float Switch, Free floating	Level Measurement
PDHS	Differential Pressure Indicating Switch	Pressure Measurement
PDLS	Differential Pressure Indicating Switch	Pressure Measurement
PS	Pressure Switch	Pressure Measurement

INSTRUSPEC Symbol	Instrument Description	Instrument Function
PLS	Pressure Switch, Low Range	Pressure Measurement
TS	Temperature Switch	Temperature Measurement
VMS	Vibration Switch, Magnetic Type	Vibration Measurement

3.03 INSTRUMENT SPECIFICATION SHEET--INSTRUSPEC

Instrument Identification: FTS

Instrument Function: Flow Measurement

Instrument Description: Thermal Flow Switch

Power Supply: 24 volts DC

Signal Input: Process

Signal Output: Contact as specified in paragraph 17216-2.01

Process Connection: As specified

Product Requirements: Flow switch shall be the thermal convection type. Switch point shall not be affected by process fluid temperature changes in the range of 32 to 140 degrees F and shall have a repeatability of plus or minus 5 percent of range.

Control unit shall operate with the specified repeatability in an ambient temperature range of 25 to 120 degrees F.

Approved Manufacturers: Fluid Components Inc., Flow Technology Inc., or equal.

Execution:

Installation: Install in accordance with manufacturer's instructions.

3.03 INSTRUMENT SPECIFICATION SHEET--INSTRUSPEC

Instrument Identification: LCS

Instrument Function: Level Measurement

Instrument Description: Conductance Level Switch

Power Supply:	120 volts AC, 60-Hertz nominal
Signal Input:	N/A
Signal Output:	Contacts as specified in paragraph 17216-2.01
Process Connection:	Male NPT, 2-inch or 3-inch size depending on number of electrodes.
Product Requirements:	Switch shall be of the conductance type with PVC sheathed 1/4-inch stainless steel rod electrodes for lengths up through 6 feet. For lengths greater than 6 feet, provide wire suspension type with stainless steel shield electrodes. Electrode fittings shall be an epoxy coated and gasketed cast aluminum housing of suitable configuration for the application. Probes shall be B/W Controller Corporation, Charles F. Warrick Co., or equal. Induction relays shall be two winding type. Primary power supply shall be 120 volts, 60-Hertz. Secondary potential shall not exceed 300 volts AC and short circuit current shall not exceed 25 milliamperes.
Approved Manufacturers:	B/W Type [DH], Warrick Series lG, or equal.
Execution:	Installation: Install in accordance with manufacturer's instructions as specified on the drawings. Calibration: In accordance with paragraph 17200-3.02 B.3.b. Switch set point and reset point adjusted as specified.

3.03 INSTRUMENT SPECIFICATION SHEET--INSTRUSPEC

Instrument Identification:	LFS
Instrument Function:	Level Measurement
Instrument Description:	Float Switch, Free-floating
Power Supply:	N/A

Signal Input:	Process
Signal Output:	Contacts, in accordance with paragraph 2.01 of this section.
Process Connection:	N/A
Product Data:	Switch shall be free-floating type, suspended from an oil resistant waterproof cable. The cable designed to support the weight of the float without additional strain relief and permanently sealed where it enters the float body. The conductors shall be a minimum size of 18 AWG. The switch shall be a single pole double throw dry contact type and rated at not less than 10 amperes at 120 Vac. Mercury switches are not acceptable. The float shall have a PVC or ABS corrosion and impact resistant shell.
Execution:	
Installation:	Install in accordance with the manufacturer's instructions, paragraph 17200-3.01, and the specified functional requirements.
Test:	In accordance with paragraph 17200-3.02.
Application/Calibration:	Application, calibration and set points as specified in paragraph 17200-3.03.
Approved Manufacturers:	Magnetrol model T10, Warrick series M, or equal.

3.03 INSTRUMENT SPECIFICATION SHEET--INSTRUSPEC

Instrument Identification:	PDHS
Instrument Function:	Pressure Measurement
Instrument Description:	Differential Pressure indicating Switch
Power Supply:	N/A
Signal Input:	Process
Signal Output:	Contacts, in accordance with paragraph 2.01 of this section.

Process Connection: 1/4-inch male NPT

Product Data:

Gauge: Differential pressure indicating switch shall have a 4-1/2-inch, 210-degree dial face with shatterproof glass window. Bourdon tube shall be bronze unless otherwise specified. Gauges manufactured to Grade A accuracy (±2.5%) in compliance with ANSI specification B40.1. The zero position shall be at the 105-degree point on the dial.

Switch: The number and type of switches as specified in paragraph 17200-3.03.

The switch points visible on the face of the gauge. The switch set point externally adjustable, using a tamper proof key. The contacts set to open or close at the set point.

Execution:

Installation: Install in accordance with manufacturer's instructions, paragraph 17200-3.01, and the specified functional requirements.

Differential pressure indicating switch mounted on a separate stand and connected to the device using 3/8-inch copper tubing in accordance with paragraph 17211-3.01.

3.03 INSTRUMENT SPECIFICATION SHEET--INSTRUSPEC

Instrument Identification: PDHS (continued)

Test: In accordance with paragraph 17200-3.02.

Application/Calibration:

Application, calibration, and set points as specified in paragraph 17200-3.03.

Approved Manufacturers: Ashcroft Type 1125A with model 2265 electric contact accessory, or equal.

3.03 INSTRUMENT SPECIFICATION SHEET--INSTRUSPEC

Instrument Identification:	PDLS
Instrument Function:	Pressure Measurement
Instrument Description:	Differential Pressure indicating Switch
Power Supply:	120 Vac, 60-Hertz nominal.
Signal Input:	Process
Signal Output:	Contacts, in accordance with paragraph 2.01 of this section.
Process Connection:	1/8-inch female NPT
Product Data:	
Indicator:	Pressure differential indicator shall have a 4-inch diameter, 90-degree scale. Sensing unit shall consist of two pressure-tight compartments separated by a silicone rubber diaphragm. The diaphragm opposed by a calibrated leaf spring. The motion of the spring transferred to the pointer by magnetic coupling. Bearings shall be sapphire. Housing material shall be die cast aluminum with a salt resistant coating. Unit capable of withstanding a static working pressures of up to 25 psig. Accuracy shall be plus or minus 2 percent of scale. Zero pointer adjustment accessible from the face.
Switch:	Two independently adjustable, photocell-actuated switch circuits provided. The switch circuits actuated by a light shield attached to the indicator pointer. Each switch circuit shall drive a DPDT output relay. Relay contacts shall be silver cadmium oxide. Switch set points knob-adjustable, accessible from the face and indicated by pointers. Electronic components housed in a translucent styrene acrylonitrile enclosure, mounted on the rear of the indicator.

3.03 INSTRUMENT SPECIFICATION SHEET--INSTRUSPEC

Instrument Identification:	PDLS (continued)
Execution:	
Installation:	Install in panels specified in Section 16176 in accordance with the manufacturer's instructions, paragraph 17200-3.01, and the specified functional requirements.
Test:	In accordance with paragraph 17200-3.02.
Application/Calibration:	Application, calibration, and set points as specified in paragraph 17200-3.03.
Approved Manufacturers:	Dwyer Series 3000 Photohelic, or equal.

3.03 INSTRUMENT SPECIFICATION SHEET--INSTRUSPEC

Instrument Identification:	PS
Instrument Function:	Pressure Measurement
Instrument Description:	Pressure Switch
Signal Input:	Process
Signal Output:	As specified in paragraph 17216-2.01
Process Connection:	1/2-inch female NPT
Product Requirements:	Pressure switch shall consist of a pressure transducer and a precision switch. Pressure transducer shall be the diaphragm piston type with wetted materials as recommended by the switch manufacturer. Piston backed by a cylinder disc to permit 10 times over-range pressure without affecting calibration. Range spring and piston shall be isolated from process fluids by the diaphragm. Switch provided with two 3/4-inch conduit connections. Switch assembly housing shall be cast aluminum rated types 3, 4, and 7D per NEMA ICS6. Contractor shall select pressure transducer so that set point falls between 30 and 70 percent of maximum range.

Approximate set point and, if applicable, reset point indicated on calibrated scales. Repeatability and sensitivity shall be 1.0 percent of operating range. Unless otherwise specified, switches nonadjustable deadband type.

Approved Manufacturers: SOR Inc. Static-O-Ring, Mercoid Series 1000, or equal.

Execution:

Installation: Install in accordance with manufacturer's instructions and to the specified requirements.

Application/Calibration: Application, calibration, and set points as specified in paragraph 17200-3.03.

3.03 INSTRUMENT SPECIFICATION SHEET--INSTRUSPEC

Instrument Identification: PLS

Instrument Function: Pressure Measurement

Instrument Description: Pressure Switch, low range

Power Supply: N/A

Signal Input: Process

Signal Output: Contacts, in accordance with paragraph 2.01 of this section.

Process Connection: 1/4-inch female NPT

Product Data: Pressure switches shall consist of a pressure transducer and a precision switch. Pressure transducer shall be the diaphragm type with wetted materials as recommended by the switch manufacturer, or as specified in paragraph 17200-3.03. The range spring isolated from process fluids by the diaphragm.

The pressure connection shall be brass or aluminum unless otherwise specified. The pressure connection sufficiently sturdy to make the switch suitable for unsupported mounting. Switch housing shall be cast aluminum rated NEMA type 4 with 3/4-inch conduit connections unless otherwise specified.

Approximate set point and, if applicable, reset point indicated on calibrated scales. Repeatability and sensitivity shall be 1.0 percent of operating range. Switches shall be non-adjustable dead-band, automatic reset type with of 0-2 inches water column.

Execution:

Installation: Install in accordance with the manufacturer's instructions, paragraph 17200-3.01, and the specified functional requirements.

Test: In accordance with paragraph 17200-3.02.

3.03 INSTRUMENT SPECIFICATION SHEET--INSTRUSPEC

Instrument Identification: PLS (continued)

Application/Calibration: Application, calibration, and set points as specified in paragraph 17200-3.03.

Approved Manufacturers: United Electric Series H400, or equal.

3.03 INSTRUMENT SPECIFICATION SHEET--INSTRUSPEC

Instrument Identification: TS

Instrument Function: Temperature Measurement

Instrument Description: Temperature Switch

Power Supply: N/A

Signal Input: Process

Signal Output: Contact as specified in paragraph 17216-2.01

Process Connection: 1/2-inch male NPT

Product Requirements: Temperature switch assembly shall consist of a SAMA PMC6-10, Class 2 filled thermal element and pressure switch connected by a capillary tube or close coupled as specified.

Temperature element shall be ASTM A269, type 316 stainless steel with SAMA PMC6-10 dimensions of X equal to or less than 5 inches, Y equal to 3/8-inch nominal, and U as specified.

Temperature switch assembly provided in three ranges with the following characteristics:

Adjustable range, degrees F	Maximum deadband, degrees F	Permissible overrange, degrees F
-50 to 70	15	180
40 to 225	12	360
150 to 375	15	520

3.03 INSTRUMENT SPECIFICATION SHEET--INSTRUSPEC

Instrument Identification: TS (continued)

Switch performance shall not be altered by bulb exposure to the specified over-range temperature.

Execution:

Installation: Temperature switch installed in accordance with the manufacturer's instructions and to the specified requirements with Union couplers provided.

For pipelines less than 4-inch diameter, temperature elements installed at a pipeline elbow if possible. Where an elbow is not available, a wye fitting installed in the pipeline for installation of the temperature element at a 45-degree angle with the flow.

END OF SECTION

SECTION 17218

ELECTRIC POWER MEASUREMENTS

PART 1--GENERAL

1.01 DESCRIPTION

This section specifies requirements for electric power measuring elements and transmitters.

1.02 REFERENCES

This section contains references to the following documents. They are a part of this section as specified and modified. Where a referenced document contains references to other standards, those documents are included as references under this section as if referenced directly. In the event of conflict between the requirements of this section and those of the listed documents, the requirements of this section shall prevail.

Unless otherwise specified, references to documents shall mean the documents in effect at the time of Advertisement for Bids or Invitation to Bid (or on the effective date of the Agreement if there were no Bids). If referenced documents have been discontinued by the issuing organization, references to those documents shall mean the replacement documents issued or otherwise identified by that organization or, if there are no replacement documents, the last version of the document before it was discontinued. Where document dates are given in the following listing, references to those documents shall mean the specific document version associated with that date, regardless of whether the document has been superseded by a version with a later date, discontinued or replaced.

Reference	Title
IEEE C37.90.1	Surge Withstand Capability (SWC) Tests for Protective Relays and Relay Systems

1.03 SUBMITTALS

Submittals shall be provided as specified in paragraph 17200-1.03.

PART 2--PRODUCTS

2.01 GENERAL

Unless otherwise specified, measuring elements and transmitters shall comply with the following requirements:

1. Transmitter output shall be 4 to 20 milliamperes current regulated into 1 to 600 ohms. Power supply shall be 120 volts derived from the power circuits being monitored.

2. Transmitter output shall be galvanically isolated from the power circuits and the transmitter case.

3. Transmitters shall comply with IEEE C37.90.1.

4. Transmitter output shall increase with increasing measurement.

2.02 INSTRUMENTATION SPECIFICATION (INSTRUSPEC) SHEETS

General requirements for instruments specified in this section are listed on INSTRUSPEC sheets in paragraph 17218-3.03. Application requirements are specified in the instrument schedule, paragraph 17200-3.03, and/or on the drawings.

2.03 PRODUCT DATA

The following data shall be provided in accordance with Section 01300:

1. Data specified in paragraph 17000-2.02.

2. Test results as specified in paragraph 17200-3.02 B.

PART 3--EXECUTION

3.01 INSTALLATION

Installation requirements are specified in paragraph 17200-3.01.

3.02 TESTING

Testing requirements are specified in paragraph 17200-3.02.

3.03 INSTRUSPEC SHEETS

The following INSTRUSPEC sheets are included in this section:

INSTRUSPEC symbol	Instrument description	Instrument function
ECT	Current transformer	Electric power measurement
EPT	Potential transformer	Electric power measurement
ES	Direct current shunt	Electric power measurement

ETC	AC current transducer	Electric power measurement
ETP	Three-phase power factor transducer	Electric power measurement
ETV	AC voltage transducer	Electric power measurement
ETW	Three-phase wattage transducer	Electric power measurement

3.03 INSTRUMENT SPECIFICATION SHEET--INSTRUSPEC

Instrument Identification: ECT

Instrument Function: Electric power measurement

Instrument Description: Current transformer

Power Supply: N/A

Signal Input: AC current

Signal Output: 0 to 5 amperes AC

Process Connection: N/A

Product Requirements: Current transformer shall be encapsulated and provided with secondary terminal shorting device. ANSI C57.13 insulation class shall be 0.5 KV or higher and accuracy shall be 0.3X or better. Current transformer shall withstand 200 percent rated current continuously and 10,000 percent rated current for 1 second without damage.

Execution:

Installation: Install in electrical switchboards or in dedicated enclosures separate from other instrumentation equipment. Wiring on the primary side of current transformer shall comply with Sections 16110 and 16120.

3.03 INSTRUMENT SPECIFICATION SHEET--INSTRUSPEC

Instrument Identification:	EPT
Instrument Function:	Electric power measurement
Instrument Description:	Potential transformer
Power Supply:	N/A
Signal Input:	AC voltage
Signal Output:	120 volts AC, isolated
Process Connection:	N/A
Product Requirements:	Potential transformer shall be encapsulated and provided with two primary fuses. ANSI C57.13 insulation class shall be 0.6 KV or higher and accuracy shall be 0.3X or better.

Execution:

Installation:	Install in electrical switchboards or in dedicated enclosures separate from other instrumentation equipment. Where potential connections must be taken out of electrical switchboards, fuses shall be provided in the electrical switchboard to protect wiring between the switchboard and the potential transformer. Wiring on the primary side of potential transformer shall comply with Sections 16110 and 16120.

3.03 INSTRUMENT SPECIFICATION SHEET--INSTRUSPEC

Instrument Identification:	ES
Instrument Function:	Electric power measurement
Instrument Description:	Direct current shunt
Power Supply:	N/A
Signal Input:	DC current
Signal Output:	0 to 50 millivolts DC
Process Connection:	N/A
Product Requirements:	Direct current shunt shall be a base mounted unit with silver-plated brass contact blocks and brazed in manganin resistance element. Shunt shall be calibrated to produce 50 millivolts at the specified current with zero instrument load. Accuracy shall be 0.25 percent and temperature coefficient 0.0014 percent per degree C or better. Shunt shall withstand 120 percent current continuously and 1000 percent current for 10 seconds without damage.
Execution:	
Installation:	Install in electrical switchboards or in dedicated enclosures separate from other instrumentation equipment.

3.03 INSTRUMENT SPECIFICATION SHEET--INSTRUSPEC

Instrument Identification:	ETC
Instrument Function:	Electric power measurement
Instrument Description:	AC current transducer
Power Supply:	120 volts AC, 60 hertz nominal
Signal Input:	0 to 5 amperes AC
Signal Output:	4 to 20 milliamps into 0 to 500 ohms
Process Connection:	N/A
Product Requirements:	Transducer shall comply with IEEE 472 SWC requirements. Transducer shall produce a transmission signal with an accuracy of 0.5 percent or better. Frequency affect shall not exceed 0.2 percent from 50 to 70 hertz. Transducer shall withstand 75 amperes for 10 seconds and 10 amperes continuously without damage. Current input burden shall not exceed 2.0 volt amperes. Input, output, and power supply connections shall be galvanically isolated. Transducer shall be Crompton Instruments, Rochester Instrument Systems, Scientific Columbus, or equal.

Execution:

Installation:	Install in electrical switchboards or in dedicated enclosures separate from other instrumentation equipment.

3.03 INSTRUMENT SPECIFICATION SHEET--INSTRUSPEC

Instrument Identification:	ETP
Instrument Function:	Electric power measurement
Instrument Description:	Three-phase power factor transducer
Power Supply:	120 volts AC, 60 hertz nominal from measurement circuit
Signal Input:	Phase correlated 120 volt and 0 to 5 amperes AC
Signal Output:	4 to 20 milliamps into 0 to 500 ohms
Process Connection:	N/A
Product Requirements:	Transducer shall comply with IEEE 472 SWC requirements. Transducer shall produce a transmission signal with an accuracy of 0.5 percent or better. Three-phase power factor transducer shall utilize one 120 volt potential connection and one 0 to 5 ampere current connection to measure power factor in balanced three-phase circuits. Output shall be linear with phase angle, and calibrated range shall be minus 60 to plus 60 degrees. Current input burden shall not exceed 2.0 volt amperes, and voltage input burden shall not exceed 3.0 volt amperes. Input, output, and power supply connections shall be galvanically isolated. Transducer shall be Crompton Instruments, Rochester Instrument Systems, Scientific Columbus, or equal.

Execution:

Installation:	Install in electrical switchboards or in dedicated enclosures separate from other instrumentation equipment.

3.03 INSTRUMENT SPECIFICATION SHEET--INSTRUSPEC

Instrument Identification:	ETV
Instrument Function:	Electric power measurement
Instrument Description:	AC voltage transducer
Power Supply:	120 volts AC, 60 hertz nominal from measurement circuit
Signal Input:	0 to 150 volts AC
Signal Output:	4 to 20 milliamps into 0 to 500 ohms
Process Connection:	N/A
Product Requirements:	Transducer shall comply with IEEE 472 SWC requirements. Transducer shall produce a transmission signal with an accuracy of 0.5 percent or better. Frequency affect shall not exceed 0.2 percent from 50 to 70 hertz. Voltage input burden shall not exceed 3.0 volt amperes. Input and output connections shall be galvanically isolated. Transducer shall be Crompton Instruments, Rochester Instrument Systems, Scientific Columbus, or equal.

Execution:

Installation:	Install in electrical switchboards or in dedicated enclosures separate from other instrumentation equipment.

3.03 INSTRUMENT SPECIFICATION SHEET--INSTRUSPEC

Instrument Identification:	ETW
Instrument Function:	Electric power measurement
Instrument Description:	Three-phase wattage
Power Supply:	120 volts AC, 60 hertz nominal from measurement circuit
Signal Input:	0 to 150 volts AC and 0 to 5 amperes AC
Signal Output:	4 to 20 milliamps into 0 to 500 ohms
Process Connection:	N/A
Product Requirements:	Transducer shall comply with IEEE 472 SWC requirements. Transducer shall produce a transmission signal with an accuracy of 0.5 percent or better. Three-phase wattage transducer shall utilize one 120 volt potential connection and two 0 to 5 ampere connections to measure power in 3-phase, 3-wire circuits. Calibrated input range shall be 0 to 1000 watts. Current input burden shall not exceed 2.0 volt amperes, and voltage input burden shall not exceed 3.0 volt amperes. Input and output connections shall be galvanically isolated. Transducer shall be Crompton Instruments, Rochester Instrument Systems, Scientific Columbus, or equal.
Execution:	
Installation:	Install in electrical switchboards or in dedicated enclosures separate from other instrumentation equipment.

END OF SECTION

SECTION 17230

UNIVERSAL CASE INSTRUMENTS

PART 1--GENERAL

1.01 DESCRIPTION

A. SCOPE:

This section specifies general requirements for universal case instruments which form a part of process control systems specified in Section 17200. Universal case instruments shall include complete assemblies of measuring, transmitting, control, indicating, and recording elements and accessories.

B. DEFINITIONS:

1. LARGE CASE INSTRUMENTS: Large case instruments shall be nominally 18 inches high by 14 inches wide by 6 inches deep and capable of mounting one to four pressure or temperature elements and a 12-inch circular chart recording mechanism.

2. MEDIUM CASE INSTRUMENTS: Medium case instruments shall be nominally 12 inches high by 10 inches wide by 6 inches deep and capable of mounting one measuring element, an eccentric scale indicator, and output functions as specified.

3. CIRCULAR CASE INSTRUMENTS: Circular case instruments shall accommodate one measuring element, a 6-inch concentric scale indicator, and electric contact control functions as specified.

1.02 REFERENCES

This section contains references to the following documents. They are a part of this section as specified and modified. Where a referenced document contains references to other standards, those documents are included as references under this section as if referenced directly. In the event of conflict between the requirements of this section and those of the listed documents, the requirements of this section shall prevail.

Unless otherwise specified, references to documents shall mean the documents in effect at the time of Advertisement for Bids or Invitation to Bid (or on the effective date of the Agreement if there were no Bids). If referenced documents have been discontinued by the issuing organization, references to those documents shall mean the replacement documents issued or otherwise identified by that organization or, if there are no replacement documents, the last version of the document before it was discontinued. Where document dates are given in the following listing, references to those documents shall mean the specific document version associated with that date, regardless of whether the document has been superseded by a version with a later date, discontinued or replaced.

Reference	Title
ANSI/ISA S51.1	Process Instrumentation Terminology
SAMA PMC6-10-63	Filled System Thermometers, 2nd edition

1.03 SUBMITTALS

Submittals shall be provided as specified in paragraph 17200-1.03.

PART 2--PRODUCTS

2.01 CASES

Cases shall be nonmetallic weather and corrosion resistant types. Windows shall be shatterproof glass or Lexon plastic.

2.02 MEASURING ELEMENTS

A. GENERAL:

Measuring elements shall include internal and/or external components as specified to produce linkage motion within the instrument case which is indicative of the measured variable.

B. PRESSURE:

Pressure elements shall be bellows or helicals as applicable for the specified range. Unless otherwise specified wetted materials shall be type 316 stainless steel for liquids and process gasses, and brass for instrument air and oxygen.

C. TEMPERATURE:

Temperature elements shall be SAMA PMC6-10, Type 1A. Capillary tubing and bulbs shall be type 316 stainless steel, and tubing shall be armored.

D. DIFFERENTIAL PRESSURE UNIT:

Differential pressure elements shall be American Meter Dri-Flo, Barton 199, or equal, for specified spans less than or equal to 50 psid. Differential pressure elements shall be Barton 224, Meriam 1020, or equal, for specified spans greater than 50 psid.

E. ELECTRONIC:

Measurement system shall be a self-balancing servo-potentiometer with solid state electronics. Balancing system shall be step-less, utilizing noncontact or conductive plastic feedback potentiometer. Error shall not exceed 0.25 percent of span and deadband hysteresis

shall not exceed 0.1 percent of span. Servo shall accept thermocouple, resistance temperature, and electronic transmission signals as specified.

2.03 OUTPUT FUNCTIONS

A. CURRENT TRANSMISSION:

Transmitter shall be two-wire motion-balance current-regulator type capable of driving 0 to 400 ohms with a loop power supply of 24 volts. Error, including measuring element and linkages, shall not exceed 0.5 percent of span.

B. INTEGRATION:

Integrator shall be a mechanical type with eight-digit nonreset cyclometer. Cam cycle shall not exceed 15 seconds. Error, including measuring element and linkages shall not exceed 0.5 percent of span.

C. RECORDER:

Recorder shall be 12-inch circular chart type with 120 volt, 60 hertz drive and capillary inking system. Chart rotation shall be 24-hour unless otherwise specified.

D. PNEUMATIC TRANSMISSION:

Pneumatic transmitter shall be 3 to 15 psig output motion-balance type with air delivery capacity of not less than 1.5 scfm and error, including measuring element and linkages not to exceed 0.5 percent of span.

E. PNEUMATIC CONTROL:

Pneumatic controller shall be of the motion-balance type with modes as indicated and 3 to 15 psig, 1.5 scfm minimum output. Control modes shall be as defined in ISA S51.1. Controller output shall be readily reversible without additional parts or necessitating realignment. Controllers shall be provided with a four-position (bumpless transfer type) manual/automatic transfer valve, supply gage, manual regulator, and output gage. Proportional action gain shall be continuously adjustable 0.2 to 50; integral and derivative time constants shall be adjustable from 0.2 to 30 minutes except when fast response is specified where 0.02 to 5 minutes adjustment range shall be provided. When specified, antireset wind-up is specified, relays and pneumatic circuitry shall be provided to eliminate the effect of reset wind-up when the process variable remains off set point for an extended period.

F. ELECTRIC CONTACTS:

Electric contacts shall be provided as specified. Actuation point error shall not exceed 0.5 percent of span. Contact form and rating shall be as specified in Section 17216.

2.04 PRODUCT DATA

The following data shall be provided in accordance with Section 01300:

1. Data specified in paragraph 17000-2.02.
2. Test results as specified in paragraph 17200-3.02 B.

PART 3--EXECUTION

3.01 INSTALLATION

Installation requirements are specified in paragraph 17200-3.01.

3.02 TESTING

Testing requirements are specified in paragraph 17200-3.02.

END OF SECTION

SECTION 17271

SIGNAL CONDITIONING MODULES

PART 1--GENERAL

1.01 DESCRIPTION

This section specifies requirements for panel mounted signal conditioning modules.

1.02 REFERENCES

This section contains references to the following documents. They are a part of this section as specified and modified. Where a referenced document contains references to other standards, those documents are included as references under this section as if referenced directly. In the event of conflict between the requirements of this section and those of the listed documents, the requirements of this section shall prevail.

Unless otherwise specified, references to documents shall mean the documents in effect at the time of Advertisement for Bids or Invitation to Bid (or on the effective date of the Agreement if there were no Bids). If referenced documents have been discontinued by the issuing organization, references to those documents shall mean the replacement documents issued or otherwise identified by that organization or, if there are no replacement documents, the last version of the document before it was discontinued. Where document dates are given in the following listing, references to those documents shall mean the specific document version associated with that date, regardless of whether the document has been superseded by a version with a later date, discontinued or replaced.

Reference	Title
EIA RS-310C	Racks, Panels, and Associated Equipment

1.03 SUBMITTALS

Submittals shall be provided as specified in paragraph 17200-1.03.

PART 2--PRODUCTS

2.01 GENERAL

Unless otherwise specified, signal conditioning modules shall comply with the following requirements:

1. Analog signal inputs shall be 1 to 5 volts DC into 20M ohms.

2. Analog signal outputs shall be 1 to 5 volts DC into 20K ohms.

3. Discrete output contacts shall be SPDT rated 5 amperes at 117 volts AC and 28 volts DC.

4. Power supply shall be 24 volts DC plus or minus 10 percent. Power supply effect shall not exceed 0.005 percent per 1.0 percent change.

5. Electronic trips shall be arranged so that output contact opens in case of loss of signal or loss of power supply.

6. Modules shall be plug-in circuit boards.

7. Modules shall be rated for continuous operation in an ambient temperature of 0 to 80 degrees C. Ambient temperature effect shall not exceed plus or minus 0.01 percent per degree C within that range.

8. Span and zero adjustments shall be made by front accessible multi-turn potentiometers.

9. Electronic trip modules shall be provided with LED indicators for relay status.

10. Printed circuit card cages shall be suitable for 19-inch EIA RS310C rack or panel mounting as required.

11. Modules shall withstand 30 volts per meter radio frequency radiation between 200 and 500 MHz with not more than 0.25 percent calibration effect. Modules shall also be provided with traps on the terminals to shunt conducted radio frequency interference to ground.

12. Signal and power supply terminals shall be galvanically isolated from the card cage frame.

All modules specified in this section shall be the product of a single manufacturer and shall be of matching construction to permit unlimited mixing within the card cages.

2.02 INSTRUMENTATION SPECIFICATION (INSTRUSPEC) SHEETS

General requirements for instruments specified in this section are listed on INSTRUSPEC sheets in paragraph 17271-3.03. Application requirements are specified in the instrument schedule, paragraph 17200-3.03, and/or on the drawings.

2.03 PRODUCT DATA

The following data shall be provided in accordance with Section 01300:

1. Data specified in paragraph 17000-2.02.

2. Test results as specified in paragraph 17200-3.02 B.

PART 3--EXECUTION

3.01 INSTALLATION

Signal conditioning modules shall be installed in panels specified in Section 17110.

3.02 TESTING

Testing requirements are specified in paragraph 17200-3.02.

3.03 INSTRUSPEC SHEETS

The following INSTRUSPEC sheets are included in this section:

INSTRUSPEC symbol	Instrument description	Instrument function
YCC	Current to current isolation amplifier	Signal Conditioning Module

3.03 INSTRUMENT SPECIFICATION SHEET--INSTRUSPEC

Instrument Identification:	YCC
Instrument Function:	Signal conditioning module
Instrument Description:	Current to current isolation amplifier
Power Supply:	24 Vdc unless otherwise specified
Signal Input:	4 to 20 mAdc
Signal Output:	4 to 20 mAdc into 0 to 1000 ohms, isolated
Process Connection:	N/A
Product Data:	Modules shall be of the same manufacture and model series throughout the work and shall be of plug-in construction suitable for 19-inch EIA dimension card racks. Load presented to input signal shall not exceed 5 ohms. Accuracy shall be 0.5 percent of span or better, time constant 50 milliseconds or less, and temperature drift 0.02 percent of span per degree C or less over a range of 0 to 50 degrees C. Power supply effect shall not exceed 0.1 percent of span with power supplies provided.
Execution:	
Installation:	Install in panels specified in Section 16176 or 17110 in accordance with the manufacturer's instructions, paragraph 17200-3.01, and the specified functional requirements.
Test:	In accordance with paragraph 17200-3.02.
Application/Calibration:	Application, calibration, and set points shall be as specified in paragraph 17200-3.03.
Approved Manufacturers:	Moore Industries SCT, AGM Electronics DCT.

END OF SECTION

SECTION 17310

PROGRAMMABLE LOGIC CONTROLLER

PART 1--GENERAL

1.01 DESCRIPTION

A. SCOPE:

This Section specifies requirements for small and large programmable logic controllers (PLCs) designed to execute discrete and continuous control logic with high reliability in industrial applications. Enclosures and components are specified in Section 17110 – Instrument and Control Panels.

All PLCs provided for this project shall comply with the requirements of this Section. PLCs provided with equipment specified in Divisions 11, 13, 14, and 15 are provided by the Equipment Manufacturer. Other PLCs are provided by the Systems Integrator per Section 17000.

B. PLC SCHEDULE:

Panel No.	PLC Size	Testing	Spares
LCP-2000	Large	Factory Acceptance	As specificed
LCP-4000	Large (Remote I/O Rack)	Factory Acceptance	As specificed
VCP-5000	Large	Factory Acceptance	As specificed

C. GENERAL REQUIREMENTS:

General requirements shall be as specified in Sections 17000 and 17110. PLC assemblies provided by Equipment Manufacturers may be provided by firms other than the Systems Integrator.

1.02 QUALITY ASSURANCE

A. REFERENCES:

This Section contains references to the following documents or documents listed in Sections 16000, 17000, and 17110. They are a part of this Section as specified and modified. Where a referenced document contains references to other standards, those documents are included as references under this Section as if referenced directly. In the event of conflict between the requirements of this Section and those of the listed documents, the requirements of this Section shall prevail.

Unless otherwise specified, references to documents shall mean the documents in effect at the time of Advertisement for Bids or Invitation to Bid (or on the effective date of the Agreement if there were no Bids).

If referenced documents have been discontinued by the issuing organization, references to those documents shall mean the replacement documents issued or otherwise identified by that organization or, if there are no replacement documents, the last version of the document before it was discontinued.

Where document dates are given in the following listing, references to those documents shall mean the specific document version associated with that date, regardless of whether the document has been superseded by a version with a later date, discontinued or replaced.

Reference	Title
IEC 61131-3	Programmable Controllers – Part 3: Programming Languages
NEMA IA 2.2	Programmable Controllers – Equipment Requirements and Tests
NEMA IA 2.3	Programmable Controllers – Programming Languages

B. SYSTEMS INTEGRATOR:

Responsibilities and qualifications shall be as specified in Section 17000.

C. FACTORY ACCEPTANCE TESTS:

Factory Acceptance Tests are specified in Section 17030 and scheduled in Paragraph 1.01 B.

1. Submit factory test forms for approval prior to tests.

2. Provide all expenses for one Owner staff member and one Engineer staff member to witness factory testing. Travel shall be during business hours on weekdays.

1.03 SUBMITTALS

The following information shall be provided in accordance with Sections 01300 and 17000:

A. SHOP DRAWINGS:

Submit under Section 17110, including:

PART 1 -

PART 2 - 1. A copy of this Specification Section, with addendum updates included, and all referenced and applicable Sections, with addendum updates included, with each paragraph check-marked to indicate Specification compliance or marked to indicate requested deviations from Specification requirements. A check mark shall denote full compliance with a paragraph as a whole.

PART 3 -

PART 4 - If deviations from the Specifications are indicated, and therefore requested by the Contractor, each deviation shall be underlined and

denoted by a number in the margin to the right of the identified paragraph, referenced to a detailed written explanation of the reasons for requesting the deviation.

PART 5 -

PART 6 - The Construction Engineer shall be the final authority for determining acceptability of requested deviations. The remaining portions of the paragraph not underlined will signify compliance on the part of the Contractor with the Specifications.

PART 7 -

PART 8 - *Failure to include a copy of the marked-up Specification Sections, along with justification(s) for any requested deviations to the Specification requirements, with the submittal shall be sufficient cause for rejection of the entire submittal with no further consideration.*

PART 9 -

PART 10 - 2. Submittal requirements per Section 17110 for the equipment specified herein.

PART 11 -

PART 12 - 3. PLC Input/Output (I/O) loop diagram drawings.

PART 13 -

PART 14 - 4. Internal power distribution schematic diagram drawings.

PART 15 -

PART 16 - 5. PLC power supply loading calculations.

PART 17 -

PART 18 - 6. List of spare parts to be provided.

PART 19 -

PART 20 - B. FACTORY ACCEPTANCE TEST SCHEDULE AND FORMS:

PART 21 -

PART 22 - Submit under Section 17030 and per the requirements of this Section.

PART 23 -

C. OPERATING AND MAINTENANCE INFORMATION:

Operating and maintenance information shall be provided in accordance with Section 01730, including the following for the PLC system:

1. Manufacturer, Representative, and Supplier contact information.

2. Manufacturer instruction manuals shall include only the following as applicable to the PLC system:

   a. Safety Precautions.

   b. Environmental Conditions.

   c. Troubleshooting guides and diagnostic techniques.

   d. Component connection diagrams.

   e. Removal and replacement instructions.

3. Warranty information.

4. Final reviewed submittal.

5. As-built drawings with record of switch and jumper settings for all components.

6. List of spare parts provided.

PART 2--PRODUCTS

2.01 GENERAL

A. MANUFACTURER:

The Owner and Construction Engineer require the specified Manufacturer to provide the equipment and/or products to be furnished under this Section. The Owner and Construction Engineer believe the Manufacturer is capable of producing equipment and/or products that will satisfy the requirements of this Section. This statement, however, shall not be construed to mean that the named Manufacturer's standard product will comply with the requirements of this Section. Manufacturers and models shall be as specified for the purpose of compatible and efficient utilization of existing equipment, supplies, and personnel training and experience, no substitutions are permitted.

B. MATERIALS:

Equipment and/or products shall be new and unused at the time of system assembly.

C. Controller conforming to NEMA IA 2.2, and with required memory and functional capacity to perform specified sequence of operation with scheduled input and output points.

1. RFI/EMI Susceptibility: MIL STD 461B CS02.
2. Showering Arc Test: NEMA Pub No ICS2-230.42.
3. Surge Withstand: ANSI C37.90a.
4. RFI Immunity: IEC 801-3.
5. Ground Continuity: IEC 801-5.
6. Electrostatic Discharge: IEC 801-2.
7. Electromagnetic Field: IEC 61000-4-3.
8. Fast transients: IEC 61000-4-4.

2.02 PROGRAMMABLE LOGIC CONTROLLER − LARGE

A. MANUFACTURER: Allen-Bradley ControlLogix. The most recent model at time of installation.

B. CONTROLLER: TUV SIL2 certified.

C. NEMA IA 2.3 and IEC 61131-3 compliant program editor with program written in Ladder Logic or Function Block Language. Program to be written using the same type of software as is specified below.

D. NETWORKING CONNECTIONS: As shown. Provide all communication interfaces, network cables, taps, terminators, power supplies, and accessories for a complete operating network.

1. Ethernet/IP.

E. PROCESSOR: Serial port dedicated solely for programming use, and battery-backed solid-state RAM memory for storage of the control program. Provide additional serial communications adapters required for other serial interfacing. RAM memory size shall be provided so that 50% is available after program is tested.

F. HOT STANDBY PROCESSOR: The hot standby processor shall provide bumpless transfer within one PLC scan and shall transfer the entire state table each scan. The data transfer rate shall be fast enough to assure bumpless transfer. The hot standby processor shall offset all network communication ports addresses so that the primary controller is always communicating. Provide all redundant processors, switchover processors, I/O interface modules, and cabling for a complete redundant processor system. Equipment Manufacturer PLCs do not require this feature.

G. INPUT AND OUTPUT MODULES:

1. Discrete Inputs: 120 Vac, 16 channel.

2. Discrete Outputs: 120 Vac, 16 channel.

3. Analog Inputs: 4-20 mAdc/1-5 Vdc, isolated channel-to-channel, 8 channel.

4. Analog Outputs: 4-20 mAdc, isolated channel-to-channel, 8 channel.

5. Spare Input/Outputs: The greater of a minimum one channel or 15 percent of each type provided per control panel.

6. I/O Chassis spare slots: Minimum [2] per chassis.

7. HART Analog Inputs: 4-20 mAdc/1-5 Vdc, isolated channel-to-channel, 8 channel. HART Interface (AB Cat No. 1756-IF8H)

8. HART Analog Outputs: 4-20 mAdc, isolated channel-to-channel, 8 channel. HART Interface (AB Cat No. 1756-OF8H)

9. RTD inputs: 6 channel individually isolated RTD inputs, 16 bit resolution, Where necessary RTD inputs cards may be used. In this case the RTD input from a pump, motor, or blower will be wired to the PLC I/O card. (AB Cat No. 1756-IR6I)

H. POWER SUPPLIES:

1. Redundant Processor Chassis: Single, 120 Vac input.

2. Processor and I/O Chassis: Single, 120 Vac input.

3. I/O only Chassis: Single, 120 Vac input.

I. MISCELLANEOUS:

Provide all cables, taps, terminators, power supplies, and accessories for a complete operating PLC system.

2.03 PROGRAMMABLE LOGIC CONTROLLER – SMALL (NOT USED)

2.04 PROGRAMMING SOFTWARE

The following software shall be provided by the Systems Integrator for this project.

A. PROGRAMMABLE LOGIC CONTROLLER – LARGE:

1. Manufacturer: Allen-Bradley RSLogix 5000, RSLinx, and network module software.

2. Licenses: Provide 1 License. Request Owner/City licensee information prior to ordering for registration.

B. PROGRAMMABLE LOGIC CONTROLLER – SMALL (NOT USED)

2.05 SPARE PARTS

The following spare parts shall be provided, refer to Paragraph 1.01 B for schedule.

A. PROGRAMMABLE LOGIC CONTROLLER – LARGE:

1. One of each unique processor card.

2. One of each unique remote I/O and communication card.

3. One for each ten, minimum of one for each unique I/O card.

4. One of each unique power supply.

5. One of each unique pre-fabricated cable.

B. PROGRAMMABLE LOGIC CONTROLLER – SMALL (NOT USED)

2.06 CONTROL PANEL FABRICATION

A. Refer to Section 17110.

B. Detail shop drawings showing field connections and any terminal block jumpering required.

C. Terminate all used and spare I/O wiring to terminal blocks.

D. Create wire markers with “to-from” component name, PLC slot/base, or terminal column number and terminal number information identical at each end. For Large PLC I/O Cables, the cable bundle shall also be labeled with “to-from” PLC slot number and terminal column number information identical at each end.

E. Provide terminal Blocks for field connections to PLC Discrete Inputs:

1. One fused terminal with LED for each group of 8 inputs, connected to control power.

2. Fused terminal connected to eight terminal blocks to provide power to each field input circuit.

3. One terminal per PLC input.

4. One common terminal for each group of 8 inputs, connected to control power common.

F. Provide terminal Blocks for field connections to PLC Discrete Outputs:

1. One fused terminal with LED for each output, connected to control power.

2. Two terminals per PLC relay output. Provide interposing relay for each solid-state PLC output. Connect output and control power common to relay coil. Provide two terminals for relay contact, normally opened unless otherwise noted.

3. One common terminal for each output, connected to control power common.

G. Provide terminal Blocks for field connections to PLC Analog Inputs:

1. One fused terminal with LED for each input, connected to +24 Vdc.

2. Two terminals per PLC input.

3. One common terminal for each input, connected to 24 Vdc common.

4. One ground terminal for each input shield, connected to signal ground bus.

5. Two surge protecting terminals for each field mounted instrument or equipment, grounded to the frame ground bus.

H. Provide terminal Blocks for field connections to PLC Analog Outputs:

1. One fused terminal with LED for each output, connected to +24 Vdc.

2. Two terminals per PLC output.

3. One common terminal for each output, connected to 24 Vdc common.

4. One ground terminal for each output shield, connected to signal ground bus.

5. Two surge protecting terminals for field mounted equipment, grounded to the frame ground bus.

2.07 PRODUCT DATA

The following Product Data shall be provided in accordance with Section 01300.

A. FACTORY ACCEPTANCE TEST RESULTS:

PART 24 - Submit under Section 17030 and per the requirements of this Section.

B. OPERATING AND MAINTENANCE INFORMATION:

Operating and maintenance information shall be provided in accordance with Section 01730, including the following.

1. Manufacturer, Representative, and Supplier contact information.

2. Manufacturer instruction manuals shall include only the following as applicable to the PLC system:

a. Safety Precautions.

b. Environmental Conditions.

c. Troubleshooting guides and diagnostic techniques.

d. Component connection diagrams.

e. Removal and replacement instructions.

3. Warranty information.

4. Final reviewed submittal.

5. As-built drawings with record of switch and jumper settings for all components.

6. List of spare parts provided.

C. PLC PROGRAM – EQUIPMENT MANUFACTURER:

Provide the as-built programmable controller program on a CD and USB drive, prepared using the software type specified in Part 2. Provide 2 copies. Label to include:

1. Owner's name, facility name, project name and project number as shown on the drawings.

2. "Application Programs For (equipment and/or PLC name)".

3. Programming software name and revision.

4. Supplier name and program revision date.

D. PLC PROGRAM – SYSTEMS INTEGRATOR:

Provide the as-built programmable controller program prepared using the software type specified in Part 2 and per Section 17990.

PART 3--EXECUTION

3.01 INSTALLATION

Refer to Section 17110.

Connect input and output devices to the PLC via control panel terminal blocks, not directly to the PLC.

3.02 FIELD INSPECTION AND TESTING

Refer to Section 17110.

A. EQUIPMENT MANUFACTURER AND SYSTEMS INTEGRATOR:

The supplier of each PLC system shall provide a qualified service representative to perform the following:

1. Inspect the PLC installation including I/O and network systems, hardware configuration switch and jumper settings.

2. Monitor all PLC system diagnostic indicators, both hardware and software, and certify that the PLC system performance meets or exceeds the Manufacturer's published specifications.

3. Assist in all testing. The Systems Integrator will provide a minimum of [four] man-weeks on-site for each PLC I/O rack. Equipment Manufacturers shall provide a minimum of two man-days on-site per equipment assembly.

4. Modify PLC programs as required.

5. Certify in writing to the Construction Engineer that the PLC system has been installed and configured in accordance with the Manufacturer's published guidelines. Equipment Manufacturer certification requirements are per the associated equipment Specification.

B. CONTRACTOR:

Fault or trouble conditions shall be investigated and resolved by the Contractor to the satisfaction of the PLC supplier.

3.03 TRAINING

A. OPERATIONS AND TROUBLESHOOTING:

Systems Integrator training is specified in Section 17990. The Systems Integrator shall conduct application program maintenance, modification, and re-loading training conforming to the requirements of Section 01664. A minimum of four man-hours on-site including training materials and expenses shall be provided for three maintenance personnel.

Equipment Manufacturer training is per the associated equipment Specification.

B. PLC PROGRAMMING:

Off-site training shall be provided for the Owner's personnel on the operation and troubleshooting of the PLC system and fundamental programming techniques. Training shall be conducted by a certified instructor in the direct employ of the PLC Manufacturer.

The training shall be structured as a lecture/lab course with hands-on lab exercises utilizing PLC system hardware similar to the hardware installed as work of this contract. Hardware simulators and programming terminals shall be furnished by the PLC Manufacturer. A minimum of three days of formal training shall be presented.

Travel shall occur one day before and one day after training. Include the cost of training and all expenses for two personnel.

3.04 PLC INPUT/OUTPUT (I/O) SUMMARY

The PLC I/O Summary provides a listing of PLC module requirements, and the assigned input/output points for the specified PLC system. The unassigned PLC I/O points shall be tagged as spare. The PLC I/O Summary is included in Attachment A at the end of this Specification Section.

The PLC I/O Summary provides a listing of the assigned input/output points to the specified PLC system.

The detailed assignment of I/O to specific points is provided for information only and will be revised and modified throughout the project. Final assignments shall be coordinated between the Contractor, the System Integrator, and the Owner during Construction.

Clarification of Headings:

1. SIGNAL: The signal number consists of a two or three letter prefix (indicating the I/O point function) followed by a number identifying the process loop with which the I/O point is associated.

2. DESCRIPTION: Provides an abbreviated description of the function of the I/O point.

3. SOURCE: Identifies field device that I/O point is connected to.

4. DRAWINGS: Identifies the Drawings on which the I/O point is referenced.

END OF SECTION

SECTION 17315

PROCESS CONTROL SYSTEM DEVELOPMENT AND PROGRAMMING

PART 1--GENERAL

1.01 DESCRIPTION

A. SCOPE:

This section specifies the general requirements applicable to the development and programming of the process control system graphical operator interface, historical data management system, and process control logic.

1.02 QUALITY ASSURANCE

A. IMPLEMENTATION PLAN MEETINGS:

The Systems Integrator shall include as work of this section of the specifications the requirement for two (2) meetings to be held at the project site. The primary function of the meetings shall be to solicit input from the Owner regarding the implementation of the process control system and to facilitate preparation of the Process Control System Implementation Plan specified herein.

The Systems Integrator shall have in attendance at each meeting a representative who is responsible for the preparation of the Process Control System Implementation Plan. The preliminary schedule and agenda for each of the meetings shall be as described below. The specific dates for each of the meetings shall be scheduled by the Systems Integrator and approved by the Construction Engineer.

The Construction Engineer shall be provided with two (2) weeks minimum advanced written notice of proposed scheduled meeting dates. The System Integrator shall prepare a detailed meeting agenda and submit it to the Construction Engineer with the notice of proposed scheduled meeting dates.

1. Meeting-1 shall be held within sixty (60) days of receipt of Notice to Proceed. The purpose of this meeting shall be to begin preparation of the Process Control System Implementation Plan. The System Integrator shall be prepared to present the capabilities of the proposed process control system software and the alternatives available for each of the major areas of implementation described by the Process Control System Implementation Plan.

2. Meeting-2 shall be held within thirty (30) days of completion of the Engineer's review of the Process Control System Implementation Plan submittal. The purpose of this meeting shall be to discuss the submittal review comments and resolve any related issues.

1.03 SUBMITTALS

The following information shall be provided in accordance with Section 01300:

1. Process Control System Implementation Plan

PART 2--PRODUCTS

2.01 PRODUCT DATA

The following data shall be provided in accordance with Section 01300:

A. PROCESS CONTROL SYSTEM DEVELOPER'S GUIDELINES:

The Process Control System Implementation Plan shall be modified and updated during the course of development of the process control system control logic and graphical operator interface to reflect the conventions and standards used in the final system development. Upon final acceptance of the work, the updated implementation plan shall be re-published and submitted as the Process Control System Developer's Guidelines.

B. PROCESS CONTROL SYSTEM CONFIGURATION REPORT:

Report documenting the final configuration of the process control system including the following:

1. Hardware Configuration: Final switch settings and jumper positions shall be documented for all process control system components including processors, communications adapter modules, motor controllers and adjustable frequency drives, power metering systems, etc.

2. Process Control Logic: Bound hard copy of the annotated process controller program listing. The program listing for each processor shall be separately bound and shall have tab dividers for each program file listing. Program listing shall include cross references.

PART 3--EXECUTION

3.01 PROCESS CONTROL SYSTEM IMPLEMENTATION PLAN

A. GENERAL:

The Systems Integrator shall prepare an implementation plan for the process control system development and programming work. The implementation plan shall establish guidelines for development of the graphical operator interface, the historical data management system and the programmable logic controller (PLC) process control logic and shall insure the consistent application of conventions and methods through the course of development. The implementation plan shall specifically address the following:

1. Tag database structure and configuration.
2. Tag naming conventions.
3. Graphical operator interface standards.
4. Process control system configuration.
5. PLC program file organization.
6. PLC data file organization.
7. List and description of graphic displays.

B. TAG DATABASE STRUCTURE AND CONFIGURATION:

The implementation plan shall define how the tag database will be organized to logically associate tags with specific input/output types, functions, or process areas. In addition, the plan shall prescribe guidelines for configuration of tag alarm handling and annunciation and tag data logging.

C. TAG NAMING CONVENTIONS:

A tag naming convention shall be established which provides a structured organization to the tag database facilitating tag searches and substitutions during system development and provide for effective and efficient design, management and operation of the process control system. The tag naming convention shall be developed to take full advantage of the capabilities of the process control system software and not impose any artificial constraints in the operation or management of the process control system. Tag names shall minimally be comprised of the following information:

1. Equipment type designation.
2. Equipment loop number.
3. Signal type designation.

D. GRAPHICAL OPERATOR INTERFACE STANDARDS:

The configuration and development of the graphical operator interface shall be based on standards prepared specifically for this application. The interface standards shall be consistently applied to the development of the interface to insure optimum usability.

All HMI development including tag naming scheme, screen navigation methods, use of pop-ups, etc. shall be implemented in a manner that is consistent with HMI systems in use elsewhere in the Owner's existing operations at other facilities. Graphic screens shall utilize the same colors, symbols, fonts, and features to provide an interface to operators that is uniform and consistent with existing HMI screens serving Owner's other facilities.

The interface standards shall specifically address the following topics:

1. Graphical Display Type: The user interface will be comprised of various types of graphic displays including schematic overviews, control panels, faceplates, utility displays, and trend displays. The content and layout of each type of interface including navigational and utility features shall be defined by the standard. The standard shall also define the naming conventions for graphic display files.

2. Symbology: The symbology used in the preparation of the graphical interface shall be defined by this standard. The symbology standard shall address the following symbol types:

    a. Symbols representing process equipment, structures, piping, and systems.

    b. Navigational and utility system icons.

    c. Dynamic data display objects including numeric displays, bargraphs, indicating lights, text labels, etc.

    d. Control objects including pushbuttons, selector switches, slider bars, setpoint entry, etc.

3. Colors: The color standard shall define the foreground, background, and border colors used to indicate dynamic conditions (run, stop, alarm, trouble, ready, etc.), process-specific applications (raw water, settled water, finished water, chemicals, etc.), graphic display backgrounds, dynamic data objects, text, control objects, etc.

4. Visibility: The visibility standard shall define the following:

    a. Application of blinking to graphic objects.

    b. Application of font styles and sizes.

    c. Manipulation of graphic object color to represent different conditions.

5. Terminology: All terminology used to annotate the graphical interface shall be defined by these standards. The terminology standards shall define the following:

    a. Descriptive names used to identify the treatment processes, systems, structures, equipment, process variables, etc.

    b. Units of measurement for all process variables.

    c. Alarm condition descriptors.

    d. Abbreviations.

6. Navigation: The navigation standard shall define the organization of the user interface and the features of the navigational system. This standard shall address all techniques used to implement the navigation system and where and how the navigation system is accessed including button bars, shortcut icons, hot links, continuation labels, and graphic menus.

E. PROCESS CONTROL LOGIC CONFIGURATION:

Guidelines shall be developed which define the organization and structure of the process control logic and data memory within the process controller. These guidelines shall address the following:

1. Structure of the control logic including the use of subroutines and the allocation of memory to accommodate modifications and expansion of the control logic.

2. Methodology for handling common control functions shall be standardized such that similar functions are implemented in a consistent manner across the entire project. Standardized routines for motor control, VFD control, instrument data handling, alarm management, etc. shall be developed and reviewed by the Owner prior to final programming.

3. Assignment of data storage memory including data formats and method of documenting memory mapping..

4. Methodology for implementing peer to peer communications including allocation of memory or register addresses is such a way as to organize data for optimum efficiency of data exchanges between peer processors.

F. PROCESS CONTROL STRATEGIES:

Process control strategies shall be reviewed with the Owner and refinements made as agreed to by the Systems Integrator. Modifications to the control strategies that are determined to be a change in scope will be addressed by change order. The final process control strategies shall be incorporated into the Implementation Plan.

3.02 TAG DATABASE DEVELOPMENT

A. GENERAL:

The process control system tag database development shall include the definition of all device, derived and soft tags and the required alarm processing and data logging and archiving definitions for each tag. Conventions used in the development of the tag database shall be as defined in Process Control System Implementation Plan.

B. TAG DEFINITION:

The definition of tags in the tag database shall comply with the following guidelines except as otherwise modified by the Process Control System Implementation Plan:

1. Tag Naming Conventions: Tag names shall minimally consist of two distinct components. The leading component shall represent the tag equipment number. The trailing component (tag descriptor) shall be an abbreviated description of the associated process variable or the function of the tag. Each component shall be assigned a fixed maximum length

which shall be dependent on the available tag name length supported by the process control system software.

The tag equipment number shall be derived from the primary item of process equipment or instrumentation most closely associated with the process variable and shall be comprised of an equipment type prefix followed by process loop number. The equipment numbers shall be as defined by the Contract Documents.

The tag descriptor shall provide a description of the process variable referenced by the tag name or a description of the function associated with the tag. Tag descriptors shall be based on ANSI/ISA-S5.1 and Appendix B of ISA-RP60.6. The tag descriptor may be comprised of several parts to clearly define the tag function. The following typographical convention shall be used to create the tag descriptor:

a. Symbol identification letters (ANSI/ISA-S5.1) shall be all upper case.

b. The first letter of an abbreviation (ISA-RP60.6) shall be upper case. The remainder of the abbreviation shall be lower case.

Examples of the tag names are provided in Table 3.02.B.1:

Table 3.02.B.1

Tag Name	Tag Function
P1121PSH	Pump P1121 pressure switch high
FIT1101	Flow transmitter 1101
P1121Run	Pump P1121 run status

2. Tag Descriptions: Describe the tag in terminology consistent with this application. Abbreviations and equipment numbers shall be not be used in the tag description without prior approval of the Owner. Tag descriptions shall not include any wording which implies the state or condition of the tag. For example, the tag description for P1121PSH shall read “Backwash Water Pump 1 Discharge Pressure” in lieu of “Backwash Water Pump 1 Discharge Pressure High.”

3. ON/OFF and Alarm State Labels: The ON/OFF and alarm state labels shall consist of words which describe the state of the tag. For digital tags, the logic TRUE state of the tag will generally be the state labeled.

Examples of ON/OFF and alarm state labels include RUN, OFF, OPEN, CLOSED, READY, ALARM, NORMAL, HIGH, LOW, HIGH-HIGH, LOW-LOW, etc. Abbreviations shall not be used in ON/OFF or alarm state labels.

C. TAG TYPES:

Tags shall be classified as either device tags, derived tags or soft tags. Device tags shall be those tags which have a physical device as the data source. Derived tags are those tags whose value is calculated or otherwise derived from another tag. Derived tags have no data source address. Soft tags are those tags whose value is obtained from another process software application.

Tags shall be defined for each of the following tag data sources:

1. Physical input/output process variables derived from the process control input/output subsystems. Refer to the Input/Output Summary, paragraph 17310-3.04.

2. Control and status data derived from the process control logic required to fully implement the process control strategies specified in paragraph 17200-3.04. This data shall include the following types of information:

   a. Operating setpoints.

   b. Process operations setup and control parameters including start/stop, lead/lag, auto/manual, enable, etc.

   c. Operating status and fault data including ready, fail-to-run, etc.

   d. Timing/counting function data including preset and accumulated values.

3. Operating, fault and diagnostic data derived from the external systems, such as chlorine generator, metering pump systems, including the following:

   a. Process variable transmitters and analyzers.

   b. Operating status of all system equipment including run and ready status.

   c. Power parameters.

   d. System trouble and alarm conditions.

   e. Process control system diagnostic data.

   f. System status, control and configuration parameters including lead/lag selection, operating setpoints, etc.

   g. Refer to the particular equipment specification section in Div. 11 for specific data to be produced, consumed and transmitted by external systems.

4. Operating data derived from electronic power metering systems including the following power parameters:

    a. Kilowatts
    b. Kilowatt-hours
    c. Kilowatt demand
    d. Kilovars
    e. Kilovolt-amperes
    f. Kilovolt-ampere-hours
    g. Kilovolt-ampere demand
    h. Power factor
    i. Line currents
    j. Voltage (phase-to-phase and phase-to-ground)
    k. Line frequency.

5. Operating, fault and diagnostic data derived from solid-state adjustable frequency motor speed controllers including the following:

    a. Run status
    b. Drive fault
    c. Start/stop control
    d. Speed setpoint
    e. Running speed
    f. Running amps

6. Diagnostic data derived from the process control system controllers, I/O subsystems, and communications controllers including the following:

    a. Controller operating mode
    b. Controller performance (e.g., Scan time)
    c. Controller fault status and fault code
    d. Controller time and date values
    e. Controller network address
    f. I/O subsystem fault status
    g. I/O module channel health
    h. Communication controller fault status

7. Analytical, operating and diagnostic data derived from turbidity instruments including, but not limited to the following:

    a. Instrument operating mode
    b. Particle count in each of the particle size ranges configured.
    c. Instrument diagnostic or fault status and status code
    d. Instrument network address
    e. Communication link status or fault condition.

8. Table 3.02.C.8 specifies the types of derived process variables and the associated real-time process variable.

Table 3.02.C.8

Real-time Process Variable Type	Derived Process Variable	Description
Flow	Totalized Flow	Totalized flow process variable shall be defined for all flow process variables.
Level	Volume	A process variable representing tank volume shall be defined for all chemical and fuel storage tanks and shall be based on the real-time level process variable and the geometry of the storage tank.
Run Status	Accumulated Runtime	An accumulated runtime process variable shall be defined for all rotating equipment which has an associated run status tag defined in the tag database.

D. DATA LOGGING:

Tags representing the following types of process variables shall be defined in the tag database for data logging. This data shall support historical and real-time dynamic trending functions.

1. Flow or chemical feed rate
2. Process pressure
3. Storage tank level or volume
4. All analytical instrument values including pH, turbidity, particle count, temperature, and chemical residual
5. Filter loss of head
6. Chemical storage weight
7. Power parameters representing line current, kilowatts, kilovars, kilovolt-amperes, and power factor.

E. ALARM HANDLING, ANNUNCIATION, AND LOGGING:

All discrete tags representing alarm or trouble conditions shall be defined in the tag database to be processed as alarms. All analog tags shall have alarm thresholds defined in the tag database. The value of the alarm thresholds shall be defined by the Owner during the preparation of the Process Control System Implementation Plan.

The tag database shall be configured to implement alarm processing and annunciation as defined by the Process Control System Implementation Plan. Each tag's alarm definition shall prescribe whether the occurrence of the alarm condition is logged to journal, printed, or audibly annunciated or any combination thereof.

3.03 GRAPHICAL OPERATOR INTERFACE DEVELOPMENT

A. GENERAL:

The process control system graphical operator interface development shall include the preparation of the specified graphic displays in accordance with the Process Control System Implementation Plan and the requirements of this specification. The Systems Integrator shall prepare additional graphic displays as may be required to provide a comprehensive process and system management graphical operator interface.

B. DEVELOPMENT GUIDELINES:

The graphical operator interface shall be developed in accordance with recognized usability practices to insure efficient and effective use of the process control system. The completed graphical operator interface shall adhere to the following three principles of usability:

- Learnability: The graphical operator interface shall be easy to learn so that the user can quickly start being productive with the tools provided by the system.
- Efficiency: The graphical operator interface shall be efficient to use, so that once the user has learned the system, a high level of productivity is possible.
- Memorability: The graphical operator interface shall be easy to remember, so that the casual user is able to return to the system after some period of absence without the need to learn the interface over again.

Adherence to the stated principles of usability shall be achieved through consistent application of the following development standards defined herein and as defined in the Process Control System Implementation Plan.

1. Graphic Design: The layout and organization of each graphic display shall be consistent among the graphic display types and shall adhere to the following standards:

    a. Position similar information and features of the graphical operator interface at the same location on each display.

    b. Enclose groupings of associated data in a frame or box.

    c. Color conventions shall be consistently applied throughout the graphical interface. Foreground colors shall be selected to provide contrast to the background color. Verify that all colors chosen can be viewed by the end-user.

    d. Text font sizes, colors and types shall be consistently applied throughout the graphical interface.

C. GENERAL GRAPHIC DISPLAY CONFIGURATION:

Graphic displays shall be configured as either full screen displays or pop-up displays. Each type of display configuration shall include the following features:

1. Full Screen Display

   a. Full screen displays shall be maximized, occupying the full, usable area of the window.

   b. Controls to close or minimize the window shall be disabled.

   c. Window exit control shall be embedded in the graphic display's navigational controls.

   d. Full screen displays shall remain in the background when a pop-up display is called from navigational hot links within the full screen display.

   e. Navigational and utility button bars shall be provided.

2. Pop-up Display

   a. Pop-up displays shall not occupy the full window and shall appear in the foreground when called from a full screen display.

   b. Pop-up displays shall appear at a user-defined location on the background display when called, but shall have the capability to be dragged to a different location on the screen.

   c. Pop-up displays shall not be resizable.

   d. Pop-up displays shall be provided with close control.

D. GRAPHIC DISPLAY TYPES:

Graphic displays shall be categorized as either schematic overview, control panel, faceplate, trend or utility.

1. Schematic Overview: The schematic overview graphic display shall be presented as a process flow diagram and shall represent major process piping, major equipment, process variable data, and process alarm and status data.

   Schematic overview displays shall be prepared in accordance with the following guidelines except as otherwise modified by the Process Control System Implementation Plan:

   a. Numeric display objects shall be provided to indicate the instantaneous value of all analog process data associated with the process. In addition, dynamic fill shall be used to indicate analog process data representing level.

b. Dynamic equipment symbols shall be provided to indicate run, off, and fault conditions for all major equipment associated with the process.

c. An alarm summary object indicating only those alarms related to the associated process shall be provided at the bottom of the display.

d. Continuation labels shall be provided to access associated schematic overview displays.

e. Hot links shall be provided on equipment symbols to provide access to an associated control panel display or faceplate.

f. Hot links shall be provided on numeric display objects to access associated trend displays.

g. Navigational and utility button bars shall be provided.

h. Schematic overview shall be a full screen display.

2. Control Panel: The control panel graphic display shall be presented as a virtual control panel providing a point of operator interface for control of a specific equipment item or system.

Control panel graphic displays shall be prepared in accordance with the following guidelines except as otherwise modified by the Process Control System Implementation Plan:

a. Graphical control objects representing selector switches, pushbutton, slider bars, etc., shall be provided to initiate the appropriate control function.

b. All pertinent operating status data associated with the equipment or system controlled by the panel shall be indicated.

c. Navigational control in the form of short-cut icons or labels shall be provided to access associated graphic displays.

d. Control panels shall be configured as pop-up graphic displays.

3. PID controller Faceplate (if used): The PID controller faceplate graphic display shall represent the appearance and functionality of a typical PID controller. The PID controller faceplate graphic display shall provide a point of operator interface for control of a specific process.

PID controller faceplate graphic displays shall be prepared in accordance with the following guidelines except as otherwise modified by the Process Control System Implementation Plan:

a. Analog data shall be presented in numerical and bargraph format.

b. PID operating status such as mode, high/low limiting, deadband in effect, etc., shall be indicated.

c. Navigational control in the form of short-cut icons or labels shall be provided to access associated graphic displays.

d. PID controller faceplates shall be configured as pop-up graphic displays.

4. Trend Display: The trend graphic display shall present a graphical trend object with the associated controls to adjust the time scale and scroll the time axis.

Trend graphic displays shall be prepared in accordance with the following guidelines except as otherwise modified by the Process Control System Implementation Plan:

a. A pen legend shall be provided which associates the trend plot to a process variable description through the use of color.

b. Y-axis shall be graduated and labeled in the appropriate engineering units.

c. Controls shall be provided to adjust the time scale and to scroll the X-axis backwards and forwards.

d. Navigational control in the form of short-cut icons or labels shall be provided to access associated graphic displays.

e. Trend graphic displays shall be configured as pop-up graphic displays.

5. Utility Display: The utility graphic display shall present all pertinent data associated with an ancillary support system. The utility graphic display shall provide a point of operator interface for control, monitoring and management of the specified utility system.

Utility graphic displays shall be prepared in accordance with the following guidelines except as otherwise modified by the Process Control System Implementation Plan:

a. Provide a schematic representation of the utility system where specified.

b. Numeric display objects shall be provided to indicate the instantaneous value of all analog process data associated with the utility.

c. Dynamic symbols or labels shall be provided to indicate current condition of the utility and its components.

d. Graphical control objects representing selector switches, pushbutton, slider bars, etc., shall be provided to initiate the appropriate control function.

e. Navigational control in the form of short-cut icons or labels shall be provided to access associated graphic displays.

f. Control panels shall be configured as either full screen displays or pop-up graphic displays, as specified.

6. PLC System Status Display: The PLC system status graphic display shall present all pertinent data associated with the process PLC system itself. The PLC system status graphic display shall provide a diagnostic interface for troubleshooting, monitoring and management of the PLC system. No control is associated with the PLC system status graphic displays.

PLC system status graphic displays shall be prepared in accordance with the following guidelines except as otherwise modified by the Process Control System Implementation Plan:

a. Provide a schematic representation of the PLC system where specified.

b. Provide detailed displays for each PLC processor showing the processor status, including diagnostic and fault codes. Display shall include communication status of Ethernet, IObus and any additional communication links associated with the processor.

c. Status of all discrete I/O points shall be indicated by dynamic text or colored graphical object. Status and raw data value of all analog I/O points shall be indicated by dynamic text.

d. Dynamic symbols or labels shall be provided to indicate current condition of the processor and its components.

e. Navigational control in the form of short-cut icons or labels shall be provided to access associated graphic displays.

E. NAVIGATION SYSTEM:

The navigation system shall be configured to provide a logical, intuitive path through the graphical operator interface and also provide the flexibility to directly access graphic displays and system utilities. The graphical operator interface shall be generally organized by process area; however, shortcuts shall be provided to navigate beyond process boundaries.

The graphical operator interface shall incorporate features to accommodate mouse-oriented navigation throughout the process control system. Scrollable menus, button bars,

embedded hotlinks and continuation labels shall be used to create a navigational system which provides ready-access to commonly used displays and utilities.

The navigation system shall be implemented in accordance with the following guidelines unless otherwise modified by the Process Control System Implementation Plan:

1. Process Overview Graphic Display: A process overview display schematically representing the overall facility shall be function as the system startup display and "home base" for conventional system navigation. Embedded hot links shall be provided on this display to permit access to all other displays.

2. Continuation Labels: Continuation labels shall be provided on all process schematic displays where a process line continues to another process area. These labels shall have embedded hot links to the process schematic display referenced by the label.

3. Graphic Menu System: A graphic menu system shall be provided where the navigational control action can result in multiple options. A graphic menu display shall be configured as a pop-up display and shall provide short cuts to associated graphic displays.

4. Short Cut Icons: Short cut icons shall be utilized to provide direct access to typical display types. Short cut icons shall be provided to represent schematic displays, control panels, trend displays, and PID controller faceplates. Short cut icons shall typically be applied to pop-up displays such as graphic menus, control panels, faceplates, and trend displays.

5. Hot Links: Hot links shall be embedded in each of the following types of display objects to provide access to an associated display or menu:

Table 3.03.E.5

Display Object	Hot Link
Equipment Symbol	Associated trend, PID controller faceplate, control panel or graphic menu display
Numeric Display	Associated trend display

F. OTHER REQUIREMENTS:

A number of additional reqiurements are to be adhered to for the development of the SCADA system software. These include owner preferences for graphical representation of the process and incorporation of additional data. The following paragraphs detail these owner requirements:

1. O&M Informaton: The SCADA software shall incorporate operation and maintenance information into the graphic displays. This will include displaying equipment type, model numbers, calibration settings, serial numbers, etc for devices on the SCADA system. This infomration shall be accessed by clicking a button or link on the screen. This shall bring up a pop-up window that will display the O&M information. Throughout the

system network communicatable devices such as those communicating via HART, MODBUS, ETHERNET/IP, or other such protocols may be used to gather this information. Where not availble via these protocols the informaiton will be entered as static informaiton for each device by the system integrator. Additionally the system integrator shall incorporate links to the O&M manual PDF file for each device as well as a link to the manufacturer's website. This window shall also give the owner the ability to enter custom notes for the piece of equipment. Each time new note is entered it shall be date and time stamped and stored in this notes window for future access.

2. Example Graphics: The following are representative screenshots of the SCADA system from the water treatment plant in Fulton County. The SCADA screens developed for this project shall be similar in nature to these example graphics. They shall be designed with 3D images of the process and overlayed with relavant infromation. Where applicable, animation of the process shall be implemeted to show running equipment or operating processes.

3. 3D models: The 3D models and associated imagery that are used to create the 3D graphics shall be turned over to the owner and shall become their property to be used for the owner's use. Additionally the owner may turn over the 3D models to other system integrators for modification of the graphics or future expansion of this or other Fulton County facilities.

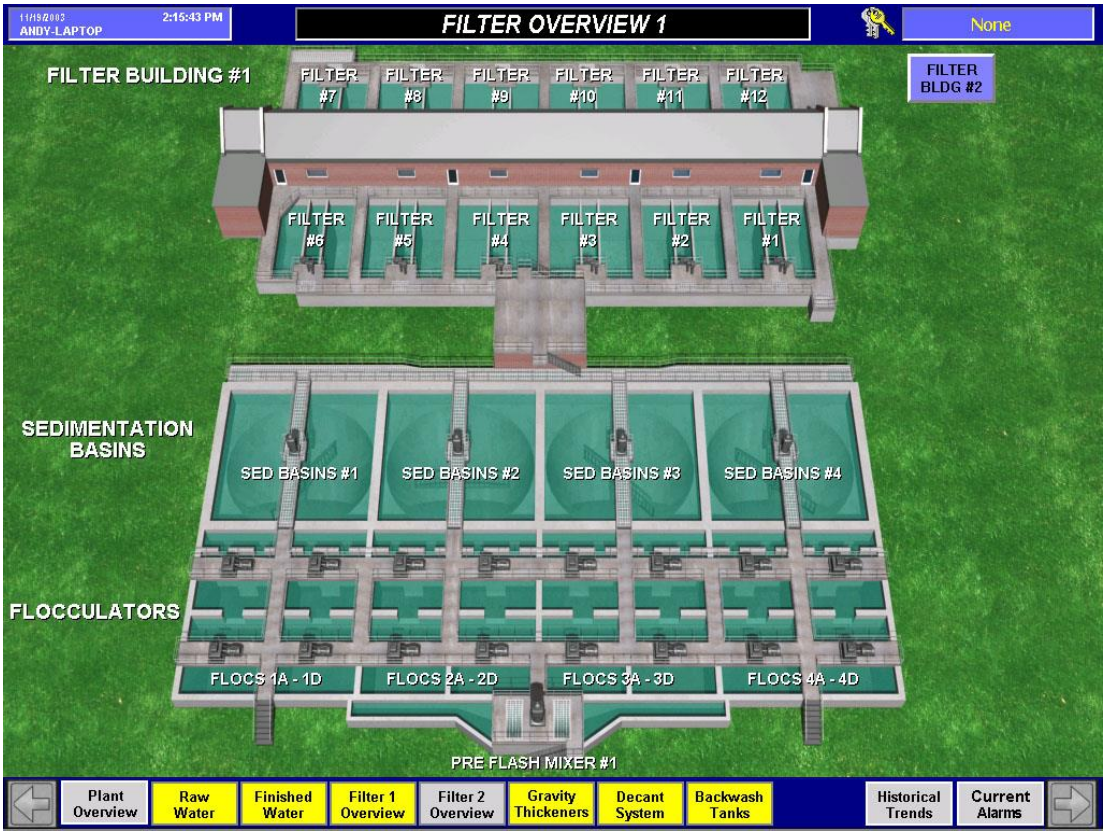

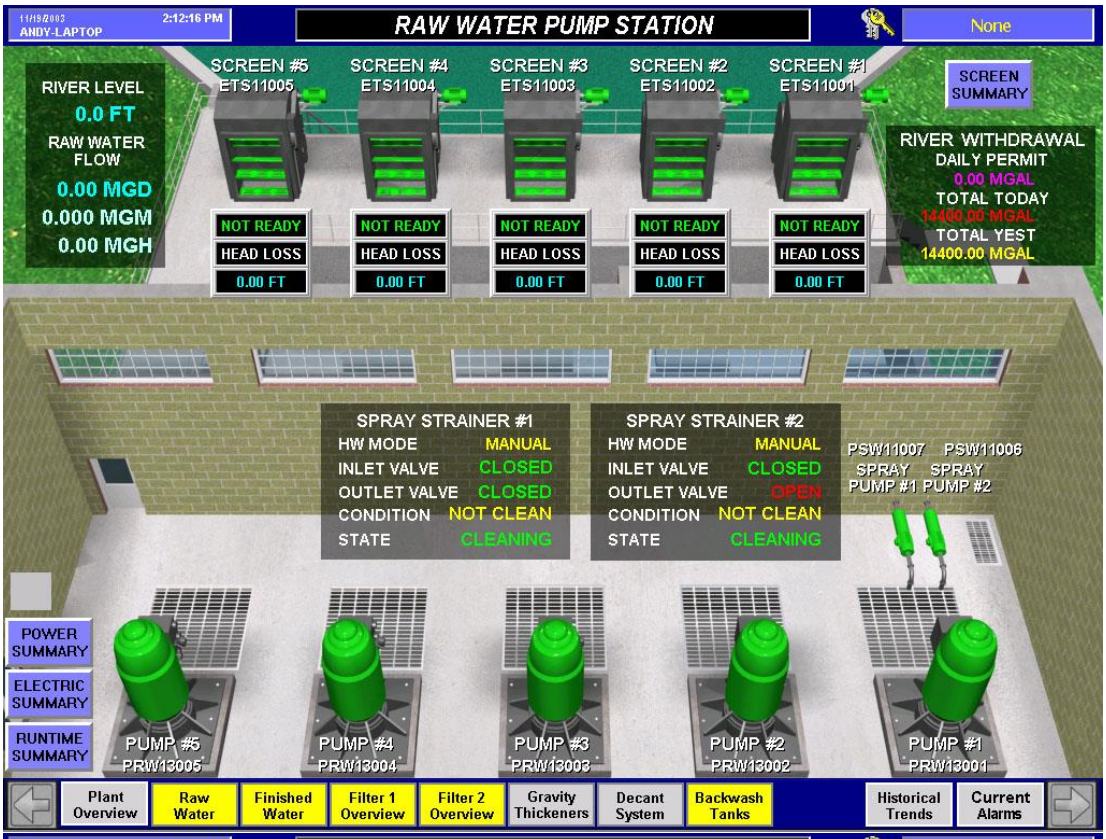
11/19/2003 2:12:16 PM
ANDY-LAPTOP
RAW WATER PUMP STATION
None
RIVER LEVEL
0.0 FT
RAW WATER FLOW
0.00 MGD
0.000 MGM
0.00 MGH
SCREEN #5 ETS11005
SCREEN #4 ETS11004
SCREEN #3 ETS11003
SCREEN #2 ETS11002
SCREEN #1 ETS11001
SCREEN SUMMARY
RIVER WITHDRAWAL
DAILY PERMIT
0.00 MGAL
TOTAL TODAY
14400.00 MGAL
TOTAL YEST
14400.00 MGAL
NOT READY
HEAD LOSS
0.00 FT
SPRAY STRAINER #1
HW MODE MANUAL
INLET VALVE CLOSED
OUTLET VALVE CLOSED
CONDITION NOT CLEAN
STATE CLEANING
SPRAY STRAINER #2
HW MODE MANUAL
INLET VALVE CLOSED
OUTLET VALVE OPEN
CONDITION NOT CLEAN
STATE CLEANING
PSW11007 SPRAY PUMP #1
PSW11006 SPRAY PUMP #2
POWER SUMMARY
ELECTRIC SUMMARY
RUNTIME SUMMARY
PUMP #5 PRW13005
PUMP #4 PRW13004
PUMP #3 PRW13003
PUMP #2 PRW13002
PUMP #1 PRW13001
Plant Overview
Raw Water
Finished Water
Filter 1 Overview
Filter 2 Overview
Gravity Thickeners
Decant System
Backwash Tanks
Historical Trends
Current Alarms

11/19/2003 2:17:22 PM
ANDY-LAPTOP
SED/FLOC OVERVIEW 3&4
None
SED BASIN 1&2
SED BASIN 5&6
3C
3D
FLC51033
SEDIMENTATION BASIN #3
FLC51034
FLOCCULATOR SYSTEM #3
THK51014
3B
3A
FLC51032
FLC51031
SEDIMENTATION BASIN #4
4B
4A
FLOCCULATOR SYSTEM #4
FLC51042
FLC51041
FMS54001
THK51015
4C
4D
FLC51043
FLC51044
PRE-FLASH MIXER #1
ALUM
POLYMER
PRE FLASH CHEMICAL INJECTION
TO SETTLED SLUDGE PUMPS 1&2
TO SETTLED WATER FLUME #2
PAC
CHLORINE
POLYMER
SETTLED CHEMICAL INJECTION
FROM RESERVIOR
Plant Overview
Raw Water
Finished Water
Filter 1 Overview
Filter 2 Overview
Gravity Thickeners
Decant System
Backwash Tanks
Historical Trends
Current Alarms

11/19/2003
ANDY-LAPTOP
2:09:46 PM
None
RESERVIOR #2
DECANT SYSTEM
GRAVITY THICKENERS
DEWATERING FACILITY
MAINTENANCE
FILTERS 13 - 24
SED BASINS 5 - 8
FILTERS 1 - 12
SED BASINS 1 - 4
RESERVIOR #1
BACKWASH TANKS
#1
#2
FUEL DEPO
POST FLASH MIXER
CHEMICAL BUILDING
ADMINISTRATION BUILDING
ISOLATED PUMPS
FINISHED WATER PUMP STATION
RAW WATER PUMP STATION
Plant Overview
Raw Water
Finished Water
Filter 1 Overview
Filter 2 Overview
Gravity Thickeners
Decant System
Backwash Tanks
Historical Trends
Current Alarms

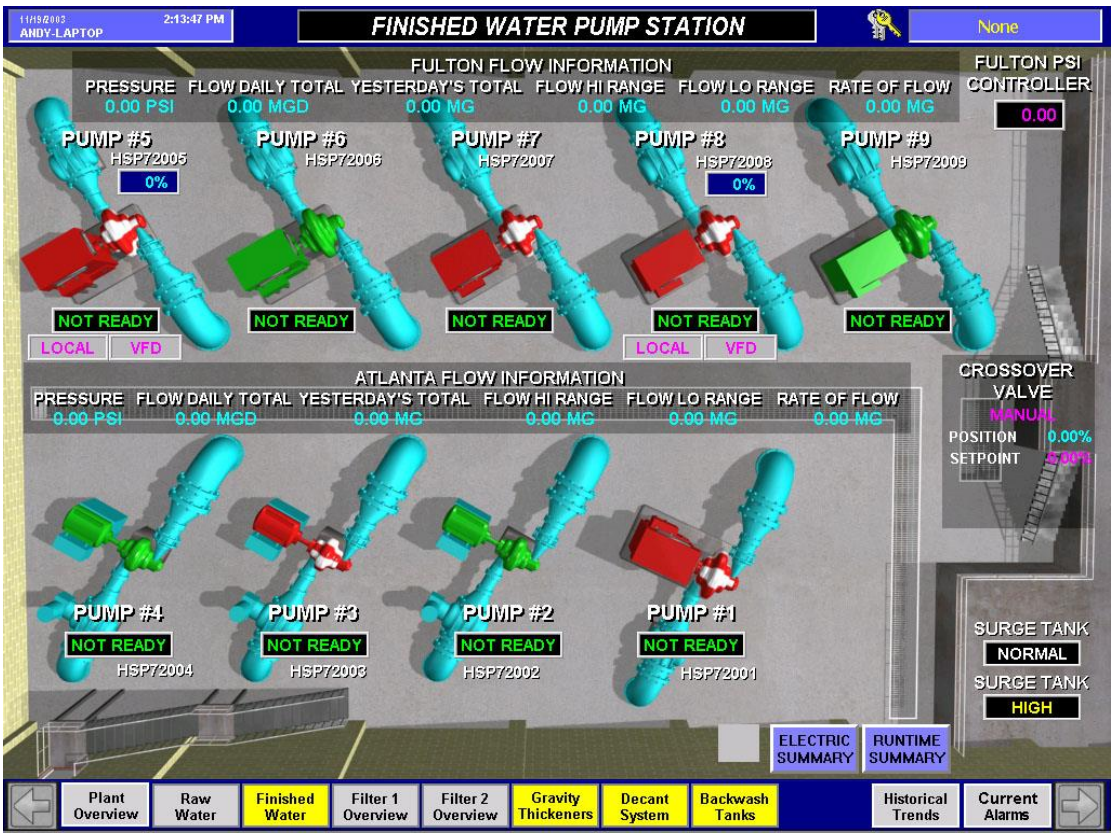

3.04 PROCESS CONTROL LOGIC DEVELOPMENT

The process control system control logic development shall include the preparation of control logic required to implement the specified control strategies and support the specified operator interface functions.

A. ORGANIZATION:

The control logic shall be organized in a hierarchical structure which correlates to the actual process relationships. Individual control logic program files shall be prepared for each system or equipment item and shall be organized by process area. Data table files shall be similarly organized by process area. Data types shall be consistently applied throughout the control logic in accordance with the Process Control System Implementation Plan.

The control logic and data table organization shall facilitate the addition of future control logic.

B. DOCUMENTATION:

All control logic shall be completely annotated down to and including the instruction level. Each rung or statement of control logic shall be provided with annotation specific to its function. Each program file shall have a title and a detailed description of the control strategy represented by

the control logic. Terminology consistent with the Process Control System Implementation Plan shall be applied throughout.

C. CONTROL LOGIC IMPLEMENTATION:

The project control strategies outline the general control requirements of the treatment process and associated utility systems. In addition to the requirements of the control strategies, the following control features shall be implemented in the process control logic:

1. Fail to operate: All automatically operated equipment shall be monitored for failure to respond to control requests from the process control system. Upon a call to start, stop, open, close, etc., a fail timer shall be initiated. If the appropriate equipment status signal (run, off, full open, full closed) is not reported back to the process control system within the time duration defined by the fail timer, an alarm shall be initiated through the process control system MMI.

2. Time based control: Process control logic for all equipment and processes controlled on the basis of time duration shall provide for operator access to the preset value of the time function through the MMI and report back to the MMI the instantaneous value of the time function associated value.

3. PID Regulatory control: Every PID regulatory control function implemented in the process control logic shall be interfaced with the MMI to provide the following functions:

    a. Report to the MMI the instantaneous values of the process variable, setpoint, and control variable.

    b. Report to the MMI the current operating mode, high/low limiting in effect, deadband in effect, cascade mode in effect, etc.

    c. Provide operator control of the operating mode, setpoint value, and the control variable in manual mode.

    d. PID tuning parameters shall be accessible via password protected screens. Supervisor level access is required for modification of tuning parameters.

4. Control Setup Control functions which are described in the control strategies as operator initiated or invoked through the process control system MMI shall be interfaced with the MMI to permit operator manipulation of that control function and to report back the current status of the control configuration. Functions of this type include manual start/stop, lead/lag selection, hand/off/automatic selection, enable, setpoint adjustment, etc.

5. Real Time Data Server Communication: Control logic shall be implemented to facilitate and optimize the communication of data between the process control system real-time data server and the process controllers. Paragraph 3.02 of this specification defines the types of tags to be defined in the tag

database. Control logic shall be implemented as required to make the specified real-time data available to the tag database. Control logic shall also be provided to support optimization of the communication between the process control system MMI real-time data server and the process controllers. Data of similar format (binary, integer, floating point, string, etc.) shall be grouped in data tables designated a communication buffer files. All tags defined in the tag database shall be addressed to the designated communication buffer files.

3.05 ON-LINE HELP

An on-line help system shall be developed to provide an on-line reference for the use of the process control interfaces and a description of the conventions used throughout the graphical operator interface. The on-line help utility shall be WinHelp or HTML-based and shall address the following topics:

1. Graphical conventions used in the operator interface including symbols, icons, colors, etc.

2. Graphical operator interface navigation system.

3. Standard procedures for login/logoff, printing, etc.

4. Functional description of each control panel graphic display including a graphic image of the display and descriptions of each object on the display.

Topics in the help system shall be dynamically-linked with other related topics through the use of hypertext-sensitive jumps and popups. All help pages shall be indexed with keywords to facilitate the use of the help utility. The on-line help utility shall include a table of contents, index and glossary.

The on-line help system shall be called from the utility button bar within the graphical operator interface.

3.06 HISTORICAL DATA MANAGEMENT SYSTEM

The historical data management system development shall include the preparation of extracts to enter the following real-time process variable types and associated attributes into the historical database.

Table 3.06

Process Variable Type	Sample Interval	Attribute			
		Total	Average	Maximum	Minimum
Flow	Hourly		X	X	X
	Daily	X			
Level	Daily		X	X	X
Power	Daily	X	X	X	X
Pressure	Daily		X	X	X

Equipment Run	Daily	X			
Water Quality Analysis	Hourly		X	X	X
	Daily				
Volume/Weight	Daily		X	X	X

3.07 TESTING AND COMMISSIONING

The graphical operator interface shall be tested and commissioned in accordance with specification 17030.

END OF SECTION

SECTION 17316

PROCESS CONTROL SOFTWARE SYSTEMS

PART 1--GENERAL

1.01 DESCRIPTION

A. SCOPE:

This section specifies software systems for the process control system real-time human-machine interface (HMI) and historical data management system. The programming and configuration of these software systems shall be performed in accordance with Specification 17315.

1.02 SUBMITTALS

The following information shall be provided in accordance with Section 01300:

1. Manufacturer's product literature for all software systems.

2. Manufacturer's recommended hardware requirements for optimum operation of each software system.

3. A copy of this specification section, with addendum updates included, and all referenced and applicable sections, with addendum updates included, with each paragraph check-marked to indicate specification compliance or marked to indicate requested deviations from specification requirements. Check marks (✓) shall denote full compliance with a paragraph as a whole. If deviations from the specifications are indicated and, therefore requested by the Contractor, each deviation shall be underlined and denoted by a number in the margin to the right of the identified paragraph. The remaining portions of the paragraph not underlined will signify compliance on the part of the Contractor with the specifications. The submittal shall be accompanied by a detailed, written justification for each deviation. Failure to include a copy of the marked-up specification sections, along with justification(s) for any requested deviations to the specification requirements, with the submittal shall be sufficient cause for rejection of the entire submittal with no further consideration.

PART 2--PRODUCTS

2.01 ACCEPTABLE PRODUCTS

This specification is based on General Electric iFix products and, by virtue of this reference, establishes the level of performance, functionality, and quality for any products offered in lieu of the referenced products including the named manufacturers. Upon election to

use products of another manufacturer, named or otherwise, the Contractor shall be responsible for all changes required in hardware and software configuration to provide the established level of performance and quality. The products listed below shall be supplied and turned over to the OWNER with O&M manuals.

The process control software systems are listed in the "Proposed Major Equipment Supplier List" in the Contract Documents. The acceptable manufacturers of process control software systems are as follows:

A. REAL-TIME HUMAN-MACHINE INTERFACE:

1. Two (2) – iFIX Development and I/O Servers (redundantly configured), 4000 tags
2. Seventeen (17) – iFIX View Nodes
3. One (1) – iFIX Historian, 2000 tags
4. Two (2) – Redundant ThinManager Servers
5. Seventeen (17) – Thin Client licenses

B. PROCESS DATABASE SYSTEM:

1. Microsoft SQL Server

C. CONTROL LOGIC PROGRAMMING:

1. One (1) - RSLogix 5000 (9324-RLD200ENE)
2. One (1) - RSEmulate 5000 (9310-WED200ENE)

Substitutions to the above listed manufacturers may be offered by the Contractor in accordance with the Instructions to Bidders.

2.02 SOFTWARE LICENSING

All process control system software products shall be licensed in the Owner's name. The number of licenses for each process control system server application including communication drivers shall be as required to implement the process control system as specified herein and detailed on the Drawings.

PART 3--EXECUTION

3.01 PROCESS CONTROL SOFTWARE SYSTEM PROGRAMMING

Process control system software shall be programmed and configured in accordance with the requirements of Specification 17315.

3.02 TRAINING

Contractor shall include as work of this specification the cost of all enrollment fees, round trip air travel, local ground transportation, and lodging for four (4) of the Owner's personnel to

attend a 5 day training course addressing the programming and development of the process control software systems.

The Contractor shall provide the services of the systems integrator for the purpose of training the Owner's personnel in the proper operation of the process control system graphical operator interface.

Training shall address the use of each graphical interface display and the underlying control logic associated with each control and monitoring function as well as the use of all system utilities.

Training shall consist of 40 hours of classroom training conducted in two 4-hour sessions per day. The same material shall be presented in each session.

Training shall comply with Section 01664 and shall be certified on form 11000-B specified in Section 01999.

END OF SECTION

SECTION 17318

COMPUTER WORKSTATIONS AND NETWORK EQUIPMENT

PART 1--GENERAL

1.01 DESCRIPTION

A. SCOPE:

This section specifies computer software and hardware systems for SCADA and control network. As noted below a portion of this hardware will be provided by the owner. The system integrator is to notify the owner within 60 days of notice to proceed when the owner provided hardware will be required.

1.02 QUALITY ASSURANCE

A. REFERENCES:

Refer to paragraph 17000-1.03 A.

B. SYSTEMS RESPONSIBILITY:

Refer to paragraph 17000-1.03 B.

1.03 SUBMITTALS

The following information shall be provided in accordance with Section 01300:

1. A copy of this specification section, with addendum updates included, and all referenced and applicable sections, with addendum updates included, with each paragraph check-marked to indicate specification compliance or marked to indicate requested deviations from specification requirements. Check marks shall denote full compliance with a paragraph as a whole. If deviations from the specifications are indicated and, therefore requested by the Contractor, each deviation shall be underlined and denoted by a number in the margin to the right of the identified paragraph. The remaining portions of the paragraph not underlined will signify compliance on the part of the Contractor with the specifications. The submittal shall be accompanied by a detailed, written justification for each deviation. Failure to include a copy of the marked-up specification sections, along with justification(s) for any requested deviations to the specification requirements, with the submittal shall be sufficient cause for rejection of the entire submittal with no further consideration.

2. Manufacturer's product literature for all software systems, marked to show products included.

3. Manufacturer's product literature for all hardware components, marked to show products included.

4. Proposed schedule of procurement, installation, and testing of products provided.

5. List and quantities of spares if applicable.

PART 2--PRODUCTS

2.01 INDUSTRIAL COMPUTER HARDWARE
The following was available at the time of design. Provide the most recent technology available at the time of installation.

A. THIN CLIENT HARDWARE (SI Provided):

1. ACP TK-3770 Thin Client or approved equal:
2. ACP ThinManager compatiable fanless thin client device
3. Office grade plastic enclosure
4. USB Optical Mouse with Scroll
5. USB keyboard
6. DVI-D video connection capable of "4K" resolution
7. Dual display support
8. Six (6) USB 3.0 ports
9. 10/100 Mbps RJ-45 Ethernet port
10. Power: 120 VAC
11. Quantity: Seven (7)

B. THIN CLIENT OPERATOR INTERFACE TERMINAL (System Integrator Provided):

1. Arista ARP-2219-ACP-D00 Thin Client or approved equal:
2. ACP ThinManager compatiable thin client device
3. Panel Mounted Industrial Enclosure with stainless steel bezel
4. 27 inch touchscreen
5. 4K resolution

6. 700:1 or higher contrast ratio
7. 178 degree horizontial and vertical viewing angle
8. Six (6) USB 3.0 ports
9. 10/100 Mbps RJ-45 Ethernet port
10. Power: 120 VAC.
11. 2 year warranty
12. Proivde sun shield for outdoor units
13. Quantity: Six (6)

C. THIN CLIENT OPERATOR INTERFACE TERMINAL – HAZARDOUS CONDITIONS (System Integrator Provided):

1. Arista ARP-2219AP-D00-CIDII-003 or approved equal.
2. Panel Mounted Thin Client
3. ACP ThinManager compatiable
4. Stainless Steel Bezel
5. 27” touch screen display
6. 24V DC input
7. 4K resolution
8. Class I Div II
9. Quantity: One (1)

D. FIREWALL : (To coordinate with Fulton County IT Department)

Provide WatchGuard XTM 330 firewall or approved equal.

1. Include 2-year subscription

E. WIRELESS FIREWALL : (To coordinate with Fulton County IT Department)

Provide WatchGuard XTM 33/33-W firewall or approved equal.

1. Include 2-year subscription

F. INDUSTRIAL FIREWALL (System Integrator Provided):

Provide Phoenix Contact FL mGuard 2000 industrial network firewall or approved equal.

1. High Speed Stateful Inspection Firewall
2. 124Mbps or greater firewall throughput
3. 40Mbps or greater VPN throughput
4. 2 x 10/100 Mbps RJ-45 Ethernet ports
5. Web based management
6. DIN-Rail Rugged Steel Enclosure
7. VPN Tunneling
8. Fully Managed operation
9. Quantity: As shown on network architecture diagram

G. INDUSTRIAL PoE ETHERNET SWITCH

Provide Trendnet TPE-T88g PoE Switch or approved equal.

1. 8 x 10/100 Mbps RJ-45 PoE / PoE+ ports
2. 8 x 10/100 Mbps RJ-45 Ethernet ports
3. Rack Mountable
4. Quantity: One (1)

H. INDUSTRIAL ETHERNET SWITCH – TYPE 1

Provide Trendnet TEG-160WS or approved equal.

1. 16 x 10/100 Mbps RJ-45 Ethernet ports
2. Rack Mountable
3. Quantity: Two (2)

I. INDUSTRIAL ETHERNET SWITCH – TYPE 2 (System Integrator Provided):

Provide N-TRON 308FX2-N, Phoenix Contact FL SWITCH 3000, or approved equal.

1. 6 x 10/100 Mbps RJ-45 Ethernet ports
2. 2 x 100BaseFX Ports
3. DIN-Rail Enclosure
4. Fully Managed operation
5. Ring Manager with ~30ms Ring Healing
6. Quantity: As shown on network architecture diagram

J. INDUSTRAIL ETHERNET SWITCH – TYPE 3 (System Integrator Provided)

Provide N-TRON 306TX-N, Phoenix Contact FL SWITCH, or ENGINEER approved equal.

1. 6 x 10/100 Mbps RJ-45 Ethernet ports
2. DIN-Rail Enclosure
3. Unmanaged operation
4. Quantity: As shown on network architecture diagram

K. SERVER HARDWARE – TYPE 1

Provide IBM System x3550 M4 server or approved equal.

1. Redundant power supplies
2. Intel Xeon 5600, 3.6GHz processor
3. 32 GB RAM
4. 2 TB SATA Disk Storage with RAID 1 redundancy
5. Meets requirements for Windows Server 2008 R2 and SCADA applications, or latest version of Windows Server that is compatiable with SCADA applications
6. Provide 4-years 24x7, 4 hour response time
7. Rack mounted
8. Quantity: Three (3)

L. SERVER HARDWARE – TYPE 2

Provide IBM System x3550 M4 server or approved equal.

1. Redundant power supplies
2. Intel Xeon 5600, 3.6GHz processor
3. 16 GB RAM
4. 6 TB SATA Disk Storage with RAID 1 redundancy
5. Meets requirements for Windows Server 2008 R2 and SCADA applications, or latest version of Windows Server that is compatiable with SCADA applications

6. Provide 4-years 24x7, 4 hour response time
7. Rack mounted
8. Quantity: Two (2)

M. REMOTE SERVER CONSOLE

Provide rack mounted keyboard-video-mouse console, IBM 172319X or approved equal.

1. 19” diagonal screen
2. IBM Keyboard w/ Integrated Pointing Device PS/2 - US English 103P, Part # 42C0030, or ENGINEER approved equal
3. At least one (1) front USB connection

N. NETWORK PRINTER

Provide color network laser printer for control system printing. Provide the printer with the following minimum features:

1. Multifunction Color Laser Printer, Copier, Scanner, Fax
2. 600 dpi color and black and white capability
3. 10/100 Mbps network interface
4. 30 pages per minute color or black and white printing
5. Microsoft Windows 7 and Server compatible
6. Quantity: One (1)
7. Provide one (1) installed and one (1) full spare set of toner cartridges (color and black and white)
8. Hewlett Packard Color LaserJet Pro 500 or approved equal

O. LARGE FORMAT DISPLAY

Provide 60 inch wall mounted display for monitoring the SCADA and security systems. The display shall have the following minimum features:

1. 60-inch LCD Display with LED backlight rated for 24 / 7 usage
2. 700 cd/m^2 brightness
3. Built-in stereo speakers
4. 4,000 to 1 contrast ratio
5. 1920 x 1080 resolution
6. DVI-D video connection
7. 176 degree horizontial and vertical viewing angle
8. 3 year warranty including On-Site
9. Quantity: Two (2)

10. Wall mounting kit with vertical tilt capability
11. Sharp PN-R603 or approved equal

P. DESKTOP MONITOR

Provide 24 inch desktop monitor with following minimum features:

1. 24 inch diagnoally measured display
2. 16:10 aspect ratio
3. Minimum 1920 x 1080 resolution
4. DVI-D video connection
5. 1,000 to 1 contrast ratio
6. 350cd/m^2 brightness
7. 178 degree horizontial and vertical viewing angle
8. Built in speakers or external undermount soundbar
9. Quantity: Five (5)
10. Microsoft Windows 7 compatible
11. Dell UltraSharp U2413 or approved equal

Q. SERVER AND NETWORK RACK

1. APC NetShelter SV AR2400 or equal
2. 19” wide Computer type enclosed rack.
3. Lockable doors
4. Removable side panels
5. Mesh type paneling for pass-thru ventilation and equipment monitoring without unlocking doors
6. 42U capacity
7. Adjustable equipment mounting depths
8. Dual power strips for redundant power
9. Dual Rack-Mounted UPS

R. NETWORK RACK MOUNTED UPS

1. APC Smart-UPS RT or equal
2. Network Rack mounted Uninterruptable Power Supply
3. Sized to support connected load for a minimum of 30 minutes
4. 120VAC Power Input / Output

5. On-Line operation

S. TABLET DEVICE

1. Apple iPad or Android tablet device
2. 12 inch screen
3. 256 GB storage
4. Compatible with ACP ThinManager Client App
5. Otter Box Defender Series case
6. Quantity: Three (3)

2.02 WORKSTATION SOFTWARE

A. GENERAL:

All software products shall be licensed in the Owner's name. Request licensee name and address from the Construction Engineer prior to ordering. Provide latest versions.

B. OIS SOFTWARE:

Refer to Section 17316.

C. OFFICE SOFTWARE

Provide Microsoft Office Professional for each workstation.

2.03 SOURCE QUALITY CONTROL

The Owner and Construction Engineer require the specified manufacturers to provide the equipment and/or products to be furnished under this section. The Owner and Construction Engineer believe the manufacturers are capable of producing equipment and/or products that will satisfy the requirements of this Section. This statement, however, shall not be construed to mean that the named manufacturer's standard product will comply with the requirements of this Section. Manufacturers shall be as specified for the purpose of compatible and efficient utilization of existing equipment, supplies, and personnel training and experience.

2.04 PRODUCT DATA

The following data shall be provided in accordance with Section 01300.

A. OPERATION AND MAINTENANCE INFORMATION:

One set of all software and hardware manuals shall be provided at time of delivery to the Owner, including maintenance information. Include written warranty and final reviewed submittal.

PART 3--EXECUTION

3.01 GENERAL

Provide workstations and equipment as shown. Troubleshoot and repair any intermittent or inoperative network connections.

3.02 SOFTWARE INSTALLATION

A. Workstation operating system software shall be pre-loaded by the workstation manufacturer.

B. ICW software will be installed by the Programmer.

3.03 APPLICATIONS CONFIGURATION

A. Industrial computer workstation (ICW) operating system software will be configured by the Programmer.

B. ICW application software will be configured by the Programmer.

C. Network firewall, switch, router, and other devices configuration will be by the Owner.

3.04 SPARE WORKSTATION

Provide workstations assembled, with software loaded, operational, and ready for immediate replacement use.

END OF SECTION

SECTION 17510

AMBIENT AIR POLLUTION MONITORING SYSTEMS

PART 1--GENERAL

1.01 DESCRIPTION

This section specifies general requirements for air pollution monitoring systems which include field mounted sensing elements and monitoring assemblies which are field or panel mounted as specified. Application requirements are specified in Section 17200.

PART 2--PRODUCTS

2.01 GENERAL

Unless otherwise specified, air pollution monitoring systems shall comply with the following requirements:

1. Field elements shall be suitable for the atmospheric pollution monitored; i.e., combustible gas detectors shall be explosion proof as specified in paragraph 17000-1.03, and chlorine, sulfur dioxide, and hydrogen sulfide detectors shall operate where exposed to dangerous concentrations of the monitored gas.

2. Power supplies shall be 120 volts, 60 hertz nominal with integral backup sufficient for not less than 4 hours operation.

3. Concentration indication shall be provided on the monitoring assembly.

4. Two contact outputs with adjustable set points shall be provided for "warning" and "danger" levels. Contact outputs shall be suitable for actuation of annunciator equipment specified in Section 17120.

2.02 INSTRUMENTATION SPECIFICATION SHEETS (INSTRUSPEC)

General requirements for instruments specified in this section are given on INSTRUSPEC sheets in paragraph 17510-3.03. Application requirements are specified in the instrument index, paragraph 17200-3.03, and/or on the drawings.

2.03 BATTERY EQUIPMENT

Batteries shall be sealed lead-calcium type and shall be provided with a charger of sufficient capacity to return full charge within 24 hours of 4-hour discharge.

2.04 PRODUCT DATA

Product data shall be provided as specified in paragraph 17000-2.02.

PART 3--EXECUTION

3.01 INSTALLATION

Install in accordance with manufacturer's instructions and as specified in paragraph 17200-3.01.

3.02 TESTING

Test with calibration gas ampules as recommended by the instrument manufacturer.

3.03 INSTRUSPEC (AIR POLLUTION MONITORING SYSTEMS)

Air pollution monitoring systems are specified on the following INSTRUSPECS. They are arranged alphabetically in Table A by system identification coding.

Table A. List of Air Pollution Monitoring Systems

INSTRUSPEC symbol	System description	System function
MI	Combustible gas infrared detector	Ambient Air Pollution Monitor

3.03 INSTRUMENT SPECIFICATION SHEET--INSTRUSPEC

Instrument Identification:	MI
Instrument Function:	Ambient air pollution monitor
Instrument Description:	Infrared combustible gas detector
Power Supply:	24 volts DC, loop power
Signal Input:	Ambient air
Signal Output:	One 4 to 20 milliampere into 0 to 600 ohm signal proportional to 0 to 100 percent lower explosive limit (LEL) of methane and two independent nonlatching alarm contacts. HART protocol.
Process Connection:	Flange type mounting
Product Requirements:	System shall consist of one or more infrared analyzers in a flange type mounting, such that sensor is inserted into the gas to be analyzed per manufacturer's instructions. Analyzers shall be open cell infrared units housed in a NEMA 7 case. Analyzers shall be designed for in situ measurement, and the ambient gas shall be completely isolated from the detection system by a window and mirror assembly. Automatic compensation for dirt buildup on mirror and window assembly shall be provided. Analyzer shall be MSA Ultima X, or equal. Processor shall include a gas concentration indicator calibrated in percent of lower explosive limit (LEL), channel selector, test pushbutton, reset pushbutton, set point calibration facility, and power supply monitor lamps. Units shall include latching warning lamp and contacts, latching alarm lamp and contacts fault lamp and normal lamp. One set of calibration filters shall be provided by the Contractor.
Execution:	
Installation:	In accordance with manufacturer's instructions.

END OF SECTION

SECTION 17765

FIBER OPTIC COMMUNICATION EQUIPMENT

PART 1--GENERAL

1.01 SCOPE

Provide the fiber optic appurtenances required to complete the fiber optic cabling system. Section 16123 specifies requirements for fiber optic data communication cables including installation, terminations, and testing.

1.02 QUALITY ASSURANCE

A. REFERENCES:

Unless otherwise specified, references to documents shall mean the documents in effect at the time of Advertisement for Bids or Invitation to Bid (or on the effective date of the Agreement if there were no Bids). If referenced documents have been discontinued by the issuing organization, references to those documents shall mean the replacement documents issued or otherwise identified by that organization or, if there are no replacement documents, the last version of the document before it was discontinued. Where document dates are given in the following listing, references to those documents shall mean the specific document version associated with that date, regardless of whether the document has been superseded by a version with a later date, discontinued or replaced.

Reference	Title
ANSI/ICEA S-87-640	Standard for Optic Fiber Outside Plant Communications Cable.
BELLCORE GR-20-CORE	Generic Requirements for Optical Fiber and Optical Fiber Cables
BELLCORE GR-409-CORE	Generic Requirements for Intrabuilding Fiber Cable
BELLCORE GR-487-CORE	Generic Requirements for Electronic Equipment Cabinets
BELLCORE GR-771-CORE	Generic Requirements for Fiber Optic Splice Closures
ISO-9001	Quality Management Systems
NFPA 70	National Electrical Code (NEC)
TIA/EIA-455-86	FOTP-86 Fiber Optic Cable Jacket Shrinkage
TIA/EIA-455-107A	FOTP-107 Determination of Component Reflectance or Link/System Return Loss Using a Loss Test Set
TIA/EIA-492AAAC	Detail Specification for 850 nm Laser-Optimized, 50μm Core Diameter/125 μm Cladding Diameter Class Ia Graded-Index Multimode Optical Fibers
TIA/EIA-598-B	Standard for Optical Fiber Cable Color Coding

1.03 SUBMITTALS

The following information shall be submitted for review in accordance with Section 01300:

A. PRODUCT LITERATURE:

1. A copy of this specification section, with addendum updates included, and all referenced and applicable sections, with addendum updates included, with each paragraph check-marked to indicate specification compliance or marked to indicate requested deviations from specification requirements.

   A check mark shall denote full compliance with a paragraph as a whole. If deviations from the specifications are indicated, and therefore requested by the Contractor, each deviation shall be underlined and denoted by a number in the margin to the right of the identified paragraph, referenced to a detailed written explanation of the reasons for requesting the deviation. The Construction Engineer shall be the final authority for determining acceptability of requested deviations. The remaining portions of the paragraph not underlined will signify compliance on the part of the Contractor with the specifications.

   Failure to include a copy of the marked-up specification sections, along with justification(s) for any requested deviations to the specification requirements, with the submittal shall be sufficient cause for rejection of the entire submittal with no further consideration.

2. A copy of the contract document drawings showing fiber optic system terminations and appurtenances, marked to show specific changes necessary for the supplied equipment.

   If no changes are required, the drawings shall be marked "*No Changes Required.*"

3. Manufacturer's catalog literature and catalog data sheets for the following items, marked to indicate products proposed, as applicable to the project:

   a. Fiber optic patch cords
   b. Fiber optic termination panels

4. Shop drawings:

   a. Termination panel fabrication and layout drawings with complete list of materials and nameplate engraving list.

   b. Interconnection cable diagrams for the complete system, showing each fiber and color in each cable. Each termination point shall be clearly marked.

PART 2--PRODUCTS

2.01 FIBER OPTIC CABLE PATCH CORDS

A. GENERAL:

Provide preparation for the connections including polishing, connectors, hardware, cleaving tool, continuity tester, visual fault locator, and supplies for installation of connectors. Terminations shall be ST type. Fusion-spliced pigtails are not acceptable.

Fiber optic cable connections shall be provided with ceramic ferrules, polycarbonate not acceptable.

B. MULTIMODE PATCH CORD CHARACTERISTICS:

Patch cords shall be 3.0 mm single coated duplex fiber with jacket and connectors on both ends. Attenuation shall be a maximum of 0.3 dB. Provide length required for connection from patch panel to equipment. Color: Orange.

2.02 FIBER OPTIC PANELS

A. GENERAL:

Fiber optic patch panels shall consist of a system of components for routing, supporting, and terminating the fiber optic cables specified herein. Terminations shall be ST type. Fiber optic cable connections shall be provided with ceramic ferrules, polycarbonate not acceptable.

B. DESCRIPTION:

Provide the following:

1. Wall-mounted type fiber optic patch panels constructed of aluminum or steel with removable hinged metal doors.

2. Mounting hardware, cable clamps and grommets, cable routers, storage decks, connector racks, and items for a complete system.

3. Machine printed port labeling system.

4. Cable routers and storage decks to retain cables' minimum bending radius.

5. Sufficient quantity of ports to terminate the number of fiber strands specified and blank covers for unused port spaces.

6. One port for each fiber in accordance with the specified cable type.

Panel shall be Corning Cable Systems ICH or equal.

2.03 PRODUCT DATA

The following information and product data specified under individual specification sections shall be provided in accordance with Section 01300.

1. Manufacturer's operation and maintenance information as specified in Section 01730. Manual shall include final reviewed submittal.

PART 3--EXECUTION

3.01 INSTALLATION

Patch panels and patch cords shall be installed in accordance with the manufacturer's instructions.

END OF SECTION

SECTION 17900

CONTROL STRATEGIES

PART 1--GENERAL

1.01 DESCRIPTION

A. These control strategies are not intended to apportion work or responsibility for work among subcontractors, suppliers and manufacturers, but are offered as a guide for programming, start up, and checkout. They describe how the system is to operate, and do not necessarily include every component required to make the system function.

B. For the purposes of this section, "Existing" refers to those structures, devices, or items of equipment which were a part of the process system prior to the work done under this Contract.

C. Control strategies describe sequential and interlocking control functions, analog control functions, color-graphic video display HMI Computers and Operator Interfaces and alarm and event logging. The Operator Interface and HMI computers shall perform supervisory functions.

D. The System Integrator will configure Operator Interface and HMI computer screens to be similar to the existing HMI process graphic displays, equipment status and alarming requirements for the abnormalities of the process and malfunctions of equipment.

PART 2--PRODUCTS (NOT USED)

PART 3--EXECUTION

3.01 CONTROL STRATEGIES

A. The following control strategies are included in this section and describe general control features for all systems.

Control Strategy Number	Title
1	Discrete Point Status
2	Analog Point Status
3	General Ready, Running and Failure System
4	SCADA Inputs and Outputs Distribution and Control Requirements
5	General Recording System
6	General Contact/Logic System
7	General Process Control Function (Analog) System
8	Trend Plots
9	Color Notation for Dynamic Objects on Control Graphic Display Screens
10	Discrete Alarm System
11	Discrete Status System
000	Startup Sequence
201	Coarse Screening
202	Influent Pumping Station
203	Vortex Grit Removal
211	Headworks Area Odor Control
212	Headworks HVAC
213	Membrane Area Odor Control
214	Membrane Area HVAC
301-1	Biological Basins – IMLR Pump
301-2	Biological Basins – Aeration Control
303	De-Ox Basins
304	Aeration Blowers

Control Strategy Number	Title
311	Post Anoxic Tanks
401	Membrane Feed Pump Station
513-1	Plant Water Pumps
513-2	Reuse Pumps
514	Hydro Pneumatic Tank System
521	Sodium Hydroxide Feed System
522	Acetic Acid Feed System
523	Sodium Hypochlorite Feed System
524	Ferric Chloride Feed System
531	Sludge Thickening
601	Plant Drain Pump Station

1. DISCRETE POINT STATUS

A. REFERENCE DRAWINGS:

All P&IDs.

B. SYSTEM COMPONENTS:

In accordance with P&IDs.

C. DESCRIPTION:

The status of each discrete input point shall be maintained in the SCADA system database. The status of each logical discrete point shall also be maintained in the SCADA system database. Logical points are points which depend upon the status of one or several discrete input points.

For example, an equipment-failed logical status will result from a loss of ready status when running. Loss of ready status when NOT running will not result in a failed logical status.

D. SCADA:

Calculate and maintain the status of all discrete and logical discrete status points in the SCADA system database.

END OF CONTROL STRATEGY 1

2. ANALOG POINT STATUS

A. REFERENCE DRAWINGS:

All P&IDs.

B. SYSTEM COMPONENTS:

In accordance with P&IDs.

C. DESCRIPTION:

Analog input points shall be checked for the following status conditions:

Failed: Point value is less than or greater than the specified value range, typically less than 3.6 mA and greater than 21.6 mA.

Low Alarm: Point value is equal to or less than a predetermined alarm value.

High Alarm: Point value is equal to or greater than a predetermined alarm value.

Normal: Point value is within the predetermined low and high alarm values.

An analog point which is in alarm status shall not be changed to normal status until the point value changes by the predetermined deadband value for the point.

D. SCADA:

Failed, high alarm, low alarm, and deadband values shall be maintained in the SCADA system database. These limits may be changed via the SCADA programmer.

Point status shall be maintained in the SCADA system database. Discrete alarm outputs shall be driven from the point status.

END OF CONTROL STRATEGY 2

3. GENERAL READY, RUNNING AND FAILURE SYSTEM

Each motor-driven piece of equipment shall have a RUNNING status input to the SCADA system. If the equipment is equipped with one or more HAND-OFF-AUTO switches, the equipment shall have an input for AUTO status. If a “RUNNING” input status occurs and the “AUTO” status does not occur, the SCADA system shall identify that the motor is operating in the HAND mode.

The run time shall be calculated and stored for all equipment being monitored. This function shall be equivalent to a conventional elapsed time meter. Program an adjustable timer to set a flag for maintenance of equipment. Eachi piece of equipment shall have a non-resetable elapsed time meter. A summary of equipment requiring maintenance shall be printed out upon plant operator request.

The failure of driven equipment shall be monitored by the SCADA system. Equipment shall be considered failed under the following conditions:

1. The equipment is in AUTO and the SCADA system attempts to operate the equipment and it does not respond within a defined time period.

2. The equipment is in AUTO and running and for whatever reason other than the SCADA system requesting the equipment to “STOP,” the equipment stops.

In addition, specific equipment is required to provide “Trouble”, “Fault”, or other specific alarm inputs to the SCADA system. This input shall be added to the internal logic described in items 1 and 2 above so that any one of these events shall trigger a “FAIL” alarm.

The SCADA system shall be used to the extent that it shall facilitate sequencing of the equipment. The plant operator shall be able to bypass the sequencing and START/STOP the equipment and OPEN/CLOSE valves and gates on a “MANUAL” procedure from the hand switches when desired. Interface to the SCADA system shall be through I/O points or workstations or laptops.

END OF CONTROL STRATEGY 3

4. SCADA INPUTS AND OUTPUTS DISTRIBUTION AND CONTROL REQUIREMENTS

A. REFERENCE DRAWINGS:

Various P&IDs.

B. DESCRIPTION:

HMI / SCADA system I/O assignment shall be as shown on the P&IDs.

Upon failure of a process equipment item, the SCADA system shall start the next available unit, as described in the applicable control strategy.

Upon failure of a PLC input/output module, SCADA system shall skip equipment controlled by PLC input/output module and go to next process unit in the lead-lag sequence.

For example two pumps' input/outputs shall be equally distributed to two different I/O modules. If three pumps are required and only two input modules and two output modules are available, then as a minimum, two pumps shall be assigned to one set of input/output modules while the third pump shall be assigned to the second set of input/output modules.

Note that "pumps" are used to describe the I/O distribution requirements. The concept shall be extended to all process equipment including, valves, gates, instruments for level, flow, pressure, etc.

END OF CONTROL STRATEGY 4

5. GENERAL RECORDING SYSTEM

A. REFERENCE DRAWINGS:

All P&IDs.

B. DESCRIPTION:

HMI workstations shall generate reports based upon process variables (pressure, flow, temperature, level and analytical) and equipment status (speed, and motor current) in real-time and from recent historical data. The exact report requirements will be determined by the Owner and shall be configured by the System Programmer during the project construction period.

All motors greater or equal to 40 HP shall be included under this recording requirement. All instruments shown on the P&IDs with PIR-xxxx. FIR-xxxx, TIR-xxxx, LIR-xxxx, and AIR-xxxx shall also be included under this recording requirement (where xxxx indicates instrument tag number).

END OF CONTROL STRATEGY 5

6. GENERAL CONTACT/LOGIC SYSTEM

A. REFERENCE DRAWINGS:

All P&IDs.

B. DESCRIPTION:

All discrete/logic control functions shall be provided as required and shall include but not be limited to the following:

1. Discrete/Logic Functions: The ability to perform logic and sequencing functions shall be supported to provide control interlocks, event sequencing and other logic operations.

2. Boolean Algebra requirements: AND gate, OR gate, NAND gate, NOR gate, XOR gate, and NXOR gate.

3. Logic requirements: Logic switch, logic compare, bi-directional time delay, and on-off with feedback.

4. Ladder Logic requirements: NO contact, NC contact, energize coil, latch/unlatch coil, retentive timer on/off delay, up/down counter, counter/timer reset, ladder execution control, immediate input, and immediate output.

END OF CONTROL STRATEGY 6

7. GENERAL PROCESS CONTROL FUNCTION (ANALOG) SYSTEM

A. REFERENCE DRAWINGS:

All P&IDs.

B. DESCRIPTION:

All analog control functions shall be provided as required and shall include but not be limited to the following:

1. Proportional-Integral-Derivative (PID) Control--Standard controller functions with balanceless, bumpless transfer from manual to automatic, manual overrides, external reset and output summing capabilities. Provision for cascade, rationing gain, bias, lead-lag, dead-time, feed forward, and feedback control shall be available.

2. HMI display system shall have a common PID controller operator interface for all equipment utilizing PID control. Controller operator interface shall include alphanumeric and graphic indication of the following features as a minimum:

   a. ID of controlled equipment

   b. ID of process variable input

   c. Controller setpoint value

   d. Process variable value

   e. Controller output value

   f. Setpoint adjustment interface

   g. Indication if setpoint is under local or remote control

   h. Local/Manual control output adjustment interface

   i. Indication if control output is under local/manual control or under control of process controller

3. Computational Functions: On-line mathematical functions shall be available to provide real-time computational capability of control variables for use in feed-forward and other advanced control functions.

4. All setpoints for alarm and control shall be adjustable from password-protected HMI Computer screens. Coordinate level of security required for password protection of setpoint screens with the Owner and Engineer.

Appropriate control action(s) shall be provided as needed.

END OF CONTROL STRATEGY 7

8. TREND PLOTS

A. REFERENCE DRAWINGS:

All P&IDs.

B. DESCRIPTION:

HMI workstations shall graphically plot trends of process variables (pressure, flow, temperature, level and analytical), controller setpoints and outputs, and equipment status (speed and motor current) in real-time and from historical data. The plant operator shall be able to select the plotting interval, within the limits of the actual data collection. Provide a minimum of four trends per display view.

In addition to the plotted data, a trend shall include:

1. Time
2. Date
3. Tag number
4. Plotting interval
5. Time at start
6. Time at latest value

END OF CONTROL STRATEGY 8

9. COLOR NOTATION FOR DYNAMIC OBJECTS ON CONTROL GRAPHIC DISPLAY SCREENS

A. REFERENCE DRAWINGS:

All P&IDs, all control strategies.

B. DESCRIPTION:

All dynamic objects on control graphic display screens shall be provided with multiple-color display to identify status as tabulated below:

Equipment	Status	Required color
Motor	Running	Red
Motor	Ready, Off	Green
Valve	Open position	Red
Valve	Transition	Flashing Yellow
Valve	Closed position	Green
Gate	Open position	Red
Gate	Transition	Flashing Yellow
Gate	Closed position	Green
All	Abnormal condition	Amber (Yellow)

END OF CONTROL STRATEGY 9

10. DISCRETE ALARM SYSTEM

A. REFERENCE DRAWINGS:

All P&IDs, electrical control diagrams, and vendor drawings

B. SYSTEM COMPONENTS:

In accordance with P&IDs.

C. DESCRIPTION:

All discrete input alarms shall be provided as shown on P&IDs or listed in the instrument index (Section 17200) whether or not specific control strategies are provided. Whenever a P&ID is not shown with any On/Off, Start/Stop, Open/Close or analog modulation control, no specific control strategy will be written even if a discrete alarm system is shown on the drawing. For this condition, control strategy 18 shall be applicable. Discrete inputs can be from field instruments (level switches, pressure switches, etc.), local control panels (relay outputs, alarm module outputs, switches), and packaged systems (designated terminals with packaged units). A manual reset is required at the equipment control panel; Reset from SCADA is not acceptable.

On a power failure, equipment shall return to the ready state when power is returned. Given the process condition, the lead piece of equipment shall start if called for. The lag and lag-lag, etc., starting sequence shall be staggered at 15 second intervals (adjustable) depending on the process. Operations shall designate this time during startup.

END OF CONTROL STRATEGY 10

11. DISCRETE STATUS SYSTEM

A. REFERENCE DRAWINGS:

All P&IDs, electrical control diagrams, and vendor drawings.

B. SYSTEM COMPONENTS:

In accordance with contract drawings, P&IDs and as called out in the specifications.

C. DESCRIPTION:

All discrete input status shall be displayed on HMI screens as required by the reference drawings and specifications regardless whether or not specific control strategies are provided. Each discrete input shall be shown in its appropriate process screen and/or equipment status screen. Discrete inputs can be originated from field instruments (motorized actuators, HVAC related air handling units, power management related contact inputs, level switches, pressure switches, etc.), local control panels (relay outputs, alarm module outputs, switches), and packaged systems (designated terminals with packaged units).

All equipment HOA selector switch Auto mode status contact is to be monitored by the PLC. When the HOA switch is not in the Auto mode the SCADA system shall display “Not in Auto” for that respective piece of equipment.

END OF CONTROL STRATEGY 11

000. STARTUP SEQUENCE

Reference Drawing: None.

Description:

When the plant is running under generator power the equipment shall startup based on a pre-defined sequence. Plant backup power generators will not allow all equipment to be started up simultaneously during a power outage. Thus there must be a sequenced startup of the equipment with adequate delays between the equipment startup. The startup sequence will be operator adjustable from a screen on the SCADA system. On this screen each major piece of equipment shall be listed. Each piece of equipment shall have a selection for its numbered startup sequence. There shall be a list of the delays, in seconds, between the startup sequences. These shall each be operator adjustable.

Local Controls:

None.

Local Automatic Control Mode:

None.

SCADA Manual Control Mode:

None.

SCADA Automatic Control Mode:

When equipment is in Automatic mode and running under generator power, the equipment shall start according to the operator adjustable startup sequence and delays as described above.

Interlocks:

None.

Alarms: The following alarms shall be provided:

None.

END OF CONTROL STRATEGY 000

201. COARSE SCREENING

Reference Drawing: 20-I-601

Description:

Two course screens shall be provided to remove debris that is encountered in wastewater that would be detrimental to equipment within the wastewater treatment facility. The debris collected by the screen is washed and compacted before it is conveyed to the grit/screenings container via two screw conveyors for proper disposal. Course Screen No. 1 & 2 and Screw Conveyor No. 1 & 2 shall have starters and hardwired controls located in MCC A.

Each conveyor shall have two solenoid valves which will send flushing water to the conveyors.
There shall be separate ON and OFF timers for the conveyor, interlocked with the conveyor run signal. Each of these timers shall be adjustable from 0 to 60 minutes. The solenoids shall open for a set duration based on the ON timer (initially set at 5 minutes). After this ON timer has expired the solenoid shall stay off for the duration of the OFF timer (initially set at 10 minutes). Once the OFF timer has expired the cycle shall begin again. The time between cycle starts and the time of operation are controlled by adjustable timers in the SCADA system. Times are set based on experience involving the amount of water to be delivered to the conveyor.

Each of two course screens shall be equipped with a level sensor and transmitter that will measure the differential level across the screen. The screen shall vary speed depending on the level differential level. A high level will cause the screen to run faster, a low level will cause a decrease in screen speed. All level signals shall be wired to LCP-2000.

An open/close type electric actuator shall be provided to each of the two influent channel gates that will allow either course screen to be isolated from process flow. The effluent gate will not have an electric actuator.

Downstream of the course screens a parshall flume with an ultrasonic instrument (FE/FIT-2010) shall be provided to measure plant influent flow. The influent flow signal shall be logged at SCADA.

An explosive gas detection device shall be provided in the course screening area as specified. The gas detector shall alarm on high or high-high levels of methane. Continuous methane levels shall be indicated and logged at SCADA.

Local Controls:

Local Controls are available from the Course Screen starter in MCC A. When either course screen control panel HOA switch is in the HAND position the respective screen shall run continuously at the speed set by the local speed control. If either screen is in the OFF position the respective screen shall not run under any condition.

Local controls for the conveyors are available from the conveyor starter in MCC A. When either conveyor control panel HOA switch is in the HAND position the respective conveyor shall run continuously. If either conveyor is in the OFF position the respective conveyor shall not run under any condition.

Local Automatic Control Mode:

There is no local automatic control for this system. The automatic control is provided by the SCADA automatic control mode.

SCADA Manual Control Mode:

The operator shall have the option of remote manual operation with start/stop control from the SCADA HMI for operation of each course screen system. When in remote manual mode the screen and associated conveyor shall run continuously as commanded by the PLC. The screen shall run at the speed designated by the operator adjustable manual speed control setpoint.

The operator shall have the option to isolate either screen from process flow by manually controlling the respective set of isolation gates from SCADA.

SCADA Automatic Control Mode:

The area plant PLC shall control of course screen(s) while in automatic control mode. When the course screen HOA is in AUTO the screen shall operate based on differential setpoint as set at the SCADA HMI. Course screen shall operate on a variable speed control based on the differential level in AUTO mode. There shall be operator adjustable low level setpoint that shall allow the screen to run at minimum speed and a high level setpoint that shall allow the screen to run at maximum speed. The screen shall run proportionally between these two setpoints. If the high high level switch is activated the screen shall run at full speed, regardless of the differential level. The screen should continue to run at full speed for 120 seconds after the high level switch has been activated and then should continue running at the minimum speed or the proportional speed indicated by the differential level transmitter. Initial setpoints for screen operation shall be verified and set in the field.

When Conveyor No. 1 or No .2 HOA is in the AUTO position, and AUTO mode is selected at the HMI. The conveyor shall run for an adjustable period of time after the respective course screen has stopped.

Interlocks:

If the high level backup level float switch is activated, the associated course screens shall run continuously until the switch is deactivated. The backup level control shall over-ride hand or automatic control. High level float switch is a hardwired interlock. A high level alarm signal shall be transmitted to SCADA for each screen.

General fail or E-Stop activated shall require a manual reset on the associated control panel for either screen or conveyor via hardwire interlock.

Alarms: The following alarms shall be provided:

General Fail Course Screen No. 1

High Level Alarm Course Screen No. 1

General Fail Course Screen No. 2

High Level Alarm Course Screen No. 2

General Fail Conveyor No. 1

General Fail Conveyor No. 2

Level instruments over or under range

High methane level in Coarse Screening building

High-High methane level in Coarse Screening building

END OF CONTROL STRATEGY 201

202. INFLUENT PUMPING STATION

Reference Drawing: 20-I-602

Description:

The Pump Station contains four submersible centrifugal pumps with Variable Frequency Drives. Sequentially, the pumps will be hardwired through local control panel. The level in the wet well is detected by redundant continuous level transmitters LIT-2020-1 and LIT-2020-2 with back up hardwired relay logic. Pumps 1 and 2 are smaller, lower flow rate pumps. Pumps 3 and 4 are larger, higher flow rate pumps. During times of low flow pumps 1 and 2 will primarily run. During times of higher flow pumps 3 and 4 will run to keep up with the higher flows and pumps 1 and 2 will not be used.

The pump station will normally be controlled by the master control panel (LCP-2000). A human machine interface shall be mounted on LCP-2000 to show all signals associated with the influent pump station. The pumps are variable frequency drive (VFD) motor starters to allow the pump station to flow match the incoming waste water. Each of the VFD's will have the ability to be operated manually and independent of the Pump Station Control Panel. The pumps will start and stop based on the wet well level set points; the pump speed will vary as the incoming flow (LE/LIT-2010) changes to maintain the selected wet well level setpoint.

A float switch (LSHH-2020) shall be provided to alarm SCADA upon High High level in the wetwell.

A magnetic flow meter (FE/FIT-2025) shall be provided in a metering vault to measure flow out of the influent wetwell. A float switch shall be provided in the metering vault to alarm SCADA upon High-High level.

Local Manual Controls:

Each motor starter is to include: HOA, Run, Off, Fault lights, Pump Fail light, and reset pushbutton. Each motor starter shall run independently of the Pump Station PLC, with the pump protective relays, when in the Hand position. When placed in the Off position the pump shall stop. There are no low level interlocks in the Hand mode.

Local Automatic Control Mode:

Under normal operating conditions, the Influent Pump Station pumps operate automatically through the Pump Station Control Panel PLC. Automatic alternation, Lead, Lag, Lag-Lag and standby pumps are selected by switch HS-2025 located on SCADA or the PMWS. The PMWS and SCADA include for each pump: HOA, Pump Run, Pump Off, and Fault indication. The pumps operate in one of two modes with the continuous level transmitter. Should the level transmitter fail (over or under range) a Level Transmitter Fault shall be indicated and the PLC will continue to operate the pumps by using the back up Level Transmitter. The level control method is selectable, PLC or backup relay logic Mode; the PLC mode is the normal mode of operation.

SCADA Manual Control Mode:

Each pump has an HOA selector switch to manually run the respective pump in hand or place in the Off mode to take out of service.

SCADA Automatic Control Mode:

From SCADA, using the Auto Alternation hand switch the lead pump can be selected manually or the automatic alternation mode selected.

The pumps will start and stop based on the wet well level set points; the pump speed will vary as the incoming flow changes to maintain the selected wet well level setpoint.

The Lead/lag designation discussion should include the following sequence of pump operation.

- One small pump ON
- 2nd small pump ON
- Small pumps OFF, one large pump ON
- 2nd large pump on
- Large pumps stay on. one small pump ON
- 2nd small pump ON

The pumps will be controlled to maintain a constant level in the wet well.

On rising inflow, if the lead pump is unable to maintain set point level running at a settable speed (typically 100 percent) for a settable period of time (typically one minute) and the level rises to the Lag pump start setpoint, the controls will start the lag pump.

The controls will equalize the speeds of the pumps and control them to maintain the set point wet well level. The process shall repeat by adding the Lag-Lag pump if the lead and lag pumps, running in parallel are unable to maintain set point level at a settable speed (typically 100 percent) for a settable period of time (typically one minute). Should the Lead, Lag or Lag-Lag pump fail the Standby pump will be called for in its place.

On a decrease of inflow, the speed of the pumps will drop to maintain constant wet well level. If the pumps are unable to keep the wet well level from dropping while at a minimum pump speed (determined by the curves of the pumps and the system curve) for a settable period of time, the controls shall stop the Lag-Lag pump once the Lag-Lag stop set point is reached and equalize the speeds of the remaining pump(s). This is similar for the Lag and Lead pumps.

The control loop shall be tuned to minimize unwanted speed fluctuations for a stable operation.

Where adjustable set points and times are used in the descriptions above, values are initial settings. During startup, field-determine the final settings in conjunction with the Owner as necessary.

Interlocks:

Should the PLC fail the backup relay logic will control the pumps based on the level setpoints and the VFD's when called for will operate at 100% speed. Should the PLC fail an output will de-energize the first output of the PLC turning off the PLC Fault relay. This enables the pump station to operate using the backup relay logic. The LIT shall be operator selectable using the panel mounted selector switch on the Pump Station Control Panel inner door. Should the lead pump fail the standby pump shall operate. When the level in the wet well rises and trips LSH (closes) the lead pump starts. The pump will continue to operate until the LSL setpoint opens. Should a pump fault occur the respective pump shall shut down and the standby pump shall operate. Provide a hand switch on the OIT to allow the relay logic to be tested. When in the test mode the PLC fail output will turn off and the relay logic shall resume operation until the test mode is returned to normal PLC control. This status shall be indicated on the SCADA system. Should the PLC fail the backup relay logic shall resume the pump station operation and a communications alarm will be indicated on the SCADA system since communication to the PLC will be lost. In the backup mode the Lead pump is always Pump No. 1, the Lag pump is Pump No. 2, the Lag-Lag Pump is Pump No. 3 and the Standby pump is Pump No. 4 (this is also the LSHH setpoint or Hi Level Alarm. Should a pump fail to start the alarm will be indicated on the respective pump motor starter. As the level rises the next pump will come on when the respective setpoint switch is reached.

Each submersible pump shall have software interlocks to shut off the associated pump upon high-high moisture and high temperature.

Each submersible pump shall have hardwired interlocks to shut off the associated pump when the high motor temperature or moisture intrusion switches activate. RTD and leak detection modules shall be provided in the VFD control panel to accommodate this interlock. RTD and Leak Detection Modules shall be provided by VFD supplier.

Each submersible pump shall have five RTD's, three for motor windings, one for motor bearing, and one for pump bearing. These RTD's shall be monitored by PLC RTD modules in the master control panel and shall shut down pumps upon high-high temperature detected via software interlock.

Each submersible pump shall have a moisture monitor to be monitored by the PLC at SCADA. Software interlock shall shutdown the respective pump upon high moisture.

END OF CONTROL STRATEGY 202

203. VORTEX GRIT REMOVAL

Reference Drawing: 20-I-603

Description:

The purpose of the Grit Chamber is to remove heavy, inorganic particles (grit) from the wastewater stream entering the plant. The Grit Chamber is a round concrete tank as shown on Process and Instrumentation Diagram. Paddles revolve slowly in the chamber to keep lighter organic materials in suspension while the grit settles to the bottom of the tank. The paddles are turned by a vertical shaft through the middle of the chamber. The shaft is turned by a drive unit, consisting of a constant speed motor and a gear reducer. Water is injected periodically into the bottom of the chamber to agitate the settled grit prior to pumping. The water line is fitted with a solenoid valve for control by the PLC in LCP-2000. The drive mechanism operates continuously in normal plant operation.

Two constant speed Grit Pumps shall be provided to remove the grit slurry that collects in the bottom of the Grit Chamber and pump it through the Cyclone Separator to the Grit Classifier.

Local Controls:

Local control for the Vortex Grit Chamber is performed by placing the individual paddle HAND/OFF/AUTO selector switch at the MCC A to the HAND mode to start the paddle and to the OFF mode to stop the paddle. Grit Pump 1 and Grit Pump 2 can also be controlled at the local level by placing the individual pump HAND/OFF/AUTO selector switch to the HAND mode to start the pump and to the OFF mode to stop the pump.

Local Automatic Control Mode:

There is no local automatic control of the grit chamber or the grit pumps.

SCADA Manual Control Mode:

A software ON-OFF switch shall be provided in the SCADA software. When the HAND-OFF-AUTO switch on the MCC A is placed in the AUTO position, the ON-OFF switch in the SCADA software shall have full control of the operation of the paddle. When the software ON-OFF switch is placed in the ON position the paddle shall run continuously. If the switch is placed in OFF the paddle will stop running.

SCADA Automatic Control Mode:

There is no automatic control of the grit chamber paddle drive. It is manually controlled as described previously.

The pumps operate on operator adjustable timers. There shall be separate ON and OFF timers for the grit pumping system. Each of these timers shall be adjustable from o to 60 minutes. The lead pump shall run for a set duration based on the ON timer (initially set at 5 minutes). After this ON timer has expired the pump shall stay off for the duration of the OFF timer (initially set at 10 minutes). Once the OFF timer has expired the cycle shall begin again. The time between cycle starts and the time of operation are controlled by adjustable timers in the SCADA system. Times are set based on experience involving the amount of grit collected and the time it takes to pump it out. During normal

operation in the Automatic Mode, the Grit Pumps alternate each cycle. The alternation of the two grit pumps will help to keep their respective suction lines clear.

The bottom of the Grit Chamber hopper includes a spray water header is equipped with a solenoid-operated, spray water distribution header that is intended to fluidize any grit that has settled in the bottom of the Grit Chamber hopper for mixing with the grit slurry.

Interlocks:

The solenoid valve which sends 3W water to the Grit Chamber hopper spray water distribution header shall be hardwired to the constant speed drive. This solenoid shall be hardwired to the starter and controlled by a timer in the MCC.

A high torque switch shall be hardwired to the constant speed drive for the paddle in the vortex grit chamber.

Alarms: The following alarms shall be provided:

The paddle for the vortex grit chamber has a common FAIL alarm status input provided to the SCADA system for indication.

Each grit pump has a common FAIL alarm status input provided to the SCADA system for indication at the operator workstation.

END OF CONTROL STRATEGY 203

211. HEADWORKS AREA ODOR CONTROL

Reference Drawing: 21-I-601

Description:

The system consists of an activated carbon tower as a mist eliminator and grease filter (FLT-2110) and an odor control fan (F-2111 with enclosure. The mist eliminator and grease filter shall be provided to remove grease and mist from the foul air before the foul air enters the odor control fan. A thermal dispersion flow meter (FE/FIT-2110) shall be used to measure foul air flow through the odor control system. The VFD-equipped odor control fan shall pull foul air into the odor control unit and release the exhaust into the atmosphere. An exhaust fan shall be provided in the odor control fan enclosure. Differential pressure transmitters shall be provided to monitor the health of the mist eliminator/grease filter, and the carbon media.

Local Controls:

The odor control fan (F-2111) is controlled from the control panel in the MCC. Local control is performed by placing the individual odor control fan HAND/OFF/AUTO selector switch (HS-2111) to the HAND mode to start the fan and to the OFF mode to stop the fan. The speed adjustment for the VFD equipped odor control fan shall be made directly at the VFD panel with the potentiometer.

Local Automatic Control Mode:

There are no local automatic controls for this system.

SCADA Manual Control Mode:

When the HAND/OFF/AUTO switch for the odor control fan at the VFD is in HAND or OFF mode, the SCADA system receives a Not in Auto status input for indication at the operator workstation. The odor control fan can manually be started and stopped from the operator workstation with the HAND/OFF/AUTO selector switch at the HMI in the HAND mode and toggling the START/STOP selector (HS-2111) at the HMI. The speed is manually set at SCADA with a 0 - 100% speed setting.

SCADA Automatic Control Mode:

When operating in SCADA automatic control the PLC shall automatically adjust the blower speed to maintain an operator selectable flow setpoint at SCADA. The PLC shall use the flow signal from FE/FIT-2110 for the feedback variable to adjust the blower speed. An adjustable flow setpoint shall be provided at SCADA.

Interlocks:

Alarms: The following alarms shall be provided:

A high differential pressure signal shall alert the Operator at SCADA to service the carbon media.

A common fail signal shall be provided at SCADA to signify odor control fan failure.

END OF CONTROL STRATEGY 211

212. HEADWORKS HVAC

Reference Drawing: 21-I-602

Description:

The Headworks HVAC system consists of two Make-Up Air Units (MAU-2021/2022). The MAUs shall provide heated make-up air to the headworks building. Each MAU shall be equipped with a control panel located in the HVAC room, one discharge damper and one Thermal Flow Switch on the effluent side of the discharge damper. SCADA is used for monitoring this system.A local control station with GO/NO GO lights is located at each entrance to the area. The LCS has a “Reset” button; a “GO” (green), and a “NO GO” (red) light on it. When the “GO” green light is illuminated one may enter following the proper confined space procedure. The “NO GO” light will light up when the ventilation system is inoperable, indicating that it is not safe to enter the area.

Local Controls:

The Make-Up Air Units are controlled from the control panel in the HVAC room.

Local Automatic Control Mode:

Local automatic controls for GO/NO GO Panel.

SCADA Manual Control Mode:

There are no SCADA manual controls for this system.

SCADA Automatic Control Mode:

There are no SCADA automatic controls for this system.

Interlocks:

When the low flow switch for either MAU blower (FSL-2121/2122) is activated while the fan is running, the Low Flow Alarm (FAL-2121/2122) shall activate at SCADA.

Alarms: The following alarms shall be provided:

A general FAIL alarm for the Make-Up Air Unit 1 shall be provided at SCADA for indication.

A general FAIL alarm for the Make-Up Air Unit 2 shall be provided at SCADA for indication.

A low flow alarm for the Make-Up Air Unit 1 discharge line (FAL-2121) shall be provided for indication at SCADA.

A low flow alarm for the Make-Up Air Unit 2 discharge line (FAL-2122) shall be provided for indication at SCADA.

END OF CONTROL STRATEGY 212

213. ODOR CONTROL MEMBRANE AREA

Reference Drawing: 21-I-603

Description:

The system consists of an activated carbon tower as shown on Process and Instrumentation Diagram 21-I-603 and specified in Section 13282. In addition, a mist eliminator and grease filter (FLT-2131), diluted chemical liquid drain system, ductwork, anodor control fan (F-2132-1), exhaust stacks, damper, MBR exhaust fan enclosure (F-2132-2), and piping are included. A mist eliminator and grease filter shall be provided to remove grease and mist from the foul air before the foul air enters the odor control fan. A thermal dispersion flow meter (FE/FIT-2131) shall be used to measure foul air flow through the odor control system. The VFD-equipped odor control fan shall pull foul air into the MBR odor control unit, which shall release the exhaust into the atmosphere. An exhaust fan shall be provided in the MBR exhaust fan enclosure. Differential pressure transmitters shall be provided to monitor the health of the mist eliminator/grease filter and the carbon media.

Local Controls:

The odor control fan (F-2132-1) is controlled from the local control panel. Local control for the Odor Control Membrane Area is performed by placing the individual odor control fan HAND/OFF/AUTO selector switch (HS-2132) to the HAND mode to start the fan and to the OFF mode to stop the fan. The speed adjustment for the VFD equipped odor control fan shall be made directly at the variable speed drive (VFD) panel with the potentiometer.

Local Automatic Control Mode:

There are no local automatic controls for the odor control membrane area.

SCADA Manual Control Mode:

When the HAND/OFF/AUTO switch for the odor control fan at the VFD is in HAND or OFF mode, the SCADA system receives a NOT IN AUTO status input (?) from the VFD for indication at the operator workstation. The odor control fan can manually be started and stopped from the operator workstation with the HAND/OFF/AUTO selector switch at the HMI in the HAND mode and toggling the START/STOP selector (HS-2132) at the HMI. The speed is manually set at SCADA with a 0 - 100% speed setting.SCADA Automatic Control Mode:

When operating in SCADA automatic control the PLC shall automatically adjust the blower speed to maintain an operator selectable flow setpoint at SCADA. The PLC shall use the flow signal from FE/FIT-2131 for the feedback variable to adjust the blower speed.

Interlocks:

None.

Alarms: The following alarms shall be provided:

A high differential pressure signal shall alert the Operator at SCADA to service the carbon media.

A common fail signal shall be provided at SCADA to signify either VFD fail or Overload condition.

END OF CONTROL STRATEGY 213

214. MEMBRANE HVAC

Reference Drawing: 21-I-604

Description:

The Membrane HVAC system consists of one Make-Up Air Unit (MAU-2140). The membrane area acetic acid room, chemical area, pump area, and citric acid room will be continuously ventilated and heated by MAU-2140. The MAU shall be equipped with a vendor provided programmable wall mounted thermostat and one discharge damper per spec Section 15951. MAU-2140 shall also be provided with a motor control panel VCP-2140. Exhaust fans EF-2141 and EF-2142 shall be supplied with motor control panels VCP-2141 and VCP-2142 located in the MCC.

Local Controls:

The MAU is controlled from the vendor-provided control panel located in the HVAC building. Vendor provided control is as specified in Section 15951.

Makeup air unit fan 2140, and the exhaust fans EF-2141 and EF-2142 can be controlled manually by placing the respective MCC located HAND/OFF/AUTO selector switches in HAND mode. When motor 2140, 2141 or 2142 is placed in HAND the respective motor shall run.

Interlocks:

The exhaust fans EF-2141 and EF-2142 shall be interlocked with the make-up air unit MAU-2140.

The motor operated discharge damper DPR-2140 shall be interlocked with MAU-2140.Exhaust fan EF-2143 shall be interlocked with SF-2143 in AUTO mode.

Alarms: The following alarms shall be provided:

A general FAIL signal (UA-2040) for the MAU shall be transmitted to SCADA for indication.

A general FAIL signal (UA-2042) for the chemical storage/pump room exhaust fan shall be transmitted to SCADA for indication.

A general FAIL signal (UA-2043) for the Citric Acid area exhaust fan shall be transmitted to SCADA for indication.

END OF CONTROL STRATEGY 214

301-1. BIOLOGICAL BASINS – IMLR PUMP

Reference Drawing: 30-I-601

Description:

Each biological basin train shall contain one constant-speed mixer for each fermentation/anoxic swing tank, a motor-controlled butterfly valve in each aeration tank, and an Internal Mix Liquor Recirculation Pump to pump internal mix liquor to the fermentation tanks. The aeration shall be provided from the aeration blowers. The IMLR Pump shall be VFD-controlled.

Local Controls:

Each pump can be run continuously by placing the respective HAND/OFF/AUTO selector switch at the mixer control panel in MCC A to the HAND position. If the switch is in the OFF position the respective mixer shall not run under any condition. The motor-operated valve can be opened and closed manually by placing the LOCAL/OFF/REMOTE selector switch in LOCAL mode. When the OPEN/STOP/CLOSE switch is placed in OPEN, the valve will open until it is 100% open or until the operator places the switch to STOP. When the switch is placed in CLOSE, the valve will close until it is 100% closed or until the operator places the switch to STOP. The position of the valve shall be monitored at SCADA.

The IMLR Pump can be run manually by placing the HAND/OFF/AUTO selector switch at the MCC A to the HAND position. The speed of the pump can be controlled by adjusting the potentiometer located on the control panel. If the switch is in the OFF position the IMLR Pump shall not run under any condition.

Local Automatic Control Mode:

There are no local automatic controls for this system.

SCADA Manual Control Mode:

A software HAND-OFF-AUTO switch for each mixer shall be provided in the SCADA software. When the HAND-OFF-AUTO switch on the MCC A is placed in the AUTO position, the HAND-OFF-AUTO switch in the SCADA software shall have full control of the operation of the mixer. When the software HAND-OFF-AUTO switch is placed in the HAND position the mixer shall run continuously. If the switch is placed in the OFF position the mixer shall stop running. There is no REMOTE-MANUAL mode of operation for the motor-controlled valve.

A software HAND-OFF-AUTO switch shall be provided in the SCADA software for the IMLR Pump. When the HAND-OFF-AUTO switch on the MCC is placed in the AUTO position, the HAND-OFF-AUTO switch in the SCADA software shall have full control of the operation of the IMLR Pump. When the software HAND-OFF-AUTO switch is placed in the HAND position the pump shall run based on a 0-100% speed setpoint from SCADA.

SCADA Automatic Control Mode:

A software HAND-OFF-AUTO switch for the mixer shall be provided in the SCADA software. When the HAND-OFF-AUTO switch on the MCC A is placed in the AUTO position, the HAND-OFF-AUTO switch in the SCADA software shall have full control of the operation of the mixer. When the switch is placed in the AUTO position the mixer will run continuously unless either the high temperature switch or general fault alarm is activated. If the high temperature or general fault alarms are activated, the mixer will shut off.

When the LOCAL/REMOTE hand switch (HS-3014-1) located in the aeration tank is in REMOTE mode, the PLC shall automatically control the position of the valve based on the DO level in the tank (AE/AIT-3014-1)When the local HAND/OFF/AUTO selector switch for the IMLR Pump (HS-3015) is placed in the AUTO position, the pump shall run based on a flow setpoint (FE/FIT-3015) from the IMLR line. If the general fault alarm, the high temperature switch, or either of the moisture intrusion switches are activated, the pump shall shut off.

Interlocks:

When the high temperature switch (TSH-3011) for the mixer is activated, the mixer shall shut off. When the general fault alarm for the mixer (UA-3011) is activated, the mixer shall shut off.

A software interlock shall be provided for the motorized valve in the aeration tank.

The IMLR Pump shall be furnished with a moisture intrusion switch for the motor (MSH-3015A) and a separate moisture intrusion switch for the seals (MSH-3015B). If either of these switches is activated, the pump motor shall shut off.

If the high temperature switch (TSH-3015) for the IMLR pump is activated, the pump motor shall shut off.

When the general fault alarm for the IMLR Pump (UA-3015) is activated, the pump motor shall shut off.

Alarms: The following alarms shall be provided:

A high temperature alarm for the mixer motor (TSH-3011) shall be provided for indication at SCADA.

A general fault alarm for the mixer (UA-3011) shall be provided for indication at SCADA.

A general fault alarm for the motorized valve (UA-3014-1) shall be provided for indication at SCADA.

A moisture intrusion alarm for the IMLR pump motor (MA-3015A) shall be provided for indication at SCADA.A moisture intrusion alarm for the IMLR pump seals (MA-3015B) shall be provided for indication at SCADA.

A high temperature alarm for the IMLR pump motor (TA-3015) shall be provided for indication at SCADA.

A general fault alarm for the IMLR pump (UA-3015) shall be provided for indication at SCADA.

END OF CONTROL STRATEGY 301-1

301-2. BIOLOGICAL BASINS – AERATION CONTROL

Reference Drawing: 30-I-601

Description:

Each biological basin train contains four aeration zones that will have the aeration flow controlled based on the desired dissolved oxygen level in that zone. Each zone's aeration pipe includes a modulating valve to control the air flow, a flowmeter to measure the air flow, and a dissolved oxygen sensor to measure the dissolved oxygen. The following control strategy describes the control of these features.

Local Controls:

Each valve can be run locally by placing the respective valve LOCAL-REMOTE selector switch at the valve in the LOCAL position. With the valve in the LOCAL mode the position of the valve can be controlled by using the OPEN-STOP-CLOSED switch on the valve actuator.

Local Automatic Control Mode:

There are no local automatic controls for this system.

SCADA Manual Control Mode:

A software MANUAL-AUTO switch for each valve shall be provided in the SCADA software. When the LOCAL-REMOTE switch on the valve placed in the REMOTE position, the MANUAL-AUTO switch in the SCADA software shall have full control of the operation of the valve. When the software MANUAL-AUTO switch is placed in the MANUAL position the valve's position shall be controlled by the manual position setpoint.

SCADA Automatic Control Mode:

A software MANUAL-AUTO switch for the valve shall be provided in the SCADA software. When the LOCAL-REMOTE switch on the valve is placed in the REMOTE position, the MANUAL-AUTO switch in the SCADA software shall have full control of the operation of the valve. When the switch is placed in the AUTO position the valve will modulate to achieve a dissolved oxygen level in its respective tank. A higher air flow (more open valve) will result in a higher dissolved oxygen level in the basin. Each biological basin train has four (4) aeration zones and three (3) dissolved oxygen setpoints. There are only three (3) dissolved oxygen setpoints because tank 3 does not have a dissolved oxygen instrument. There shall be an operator adjustable switch on the SCADA screen that will select whether the valve in zone 3 will mimic the position of the valve in zone 2 or zone 4. These valves will each work independently to achieve the dissolved oxygen level in their respective tank.

To achieve the most efficient operation of the aeration system it is desirable to have the modulating valves open as much as possible. Ideally one or more of the valves will operate at 100% open. To create the most efficient operating scenario possible, the control system shall monitor the operation of all of the valves. When the least open valve is less than 90% open for more than 120 seconds (operator adjustable), the system shall adjust all of the valve positions to allow the least open valve to 100% open.

Interlocks:

None.

Alarms: The following alarms shall be provided:

As shown on the P&IDs.

END OF CONTROL STRATEGY 301-2

303. DE-OX BASINS

Reference Drawing: 30-I-603

Description:

Return Activated Sludge shall enter the De-Ox basins from the MBR system. The RAS shall enter the cutthroat flume before it is transported to each De-Ox basin. The De-Ox Basin trains 1 and 2 contain one mixer each that shall be constant speed. The level of oxygen in the basins shall be detected by dissolved oxygen analyzers AE/AIT-3031 and AE/AIT-3032.

Local Controls:

Local control for the De-Ox basins is performed by placing the individual mixer HAND-OFF-AUTO selector switch at the MCC B to the HAND mode to start the mixer and to the OFF mode to stop the mixer.

Local Automatic Control Mode:

When the HAND-OFF-AUTO switch on the MCC B is placed in the AUTO position the mixer shall operate automatically according to the SCADA Manual and Automatic Control Modes.

SCADA Manual Control Mode:

A software HAND-OFF-AUTO switch shall be provided in the SCADA software. When the HAND-OFF-AUTO switch on the MCC B is placed in the AUTO position, the HAND-OFF-AUTO switch in the SCADA software shall have full control of the operation of the mixer. When the software HAND-OFF-AUTO switch is placed in the HAND position the mixer shall run continuously. If the switch is placed in OFF the mixer shall stop running.

SCADA Automatic Control Mode:

A software HAND-OFF-AUTO switch for each mixer shall be provided in the SCADA software. When the HAND-OFF-AUTO switch on the MCC B is placed in the AUTO position, the HAND-OFF-AUTO switch in the SCADA software shall have full control of the operation of the mixer. When the switch is placed in the AUTO position, the mixer shall run continuously unless the general fault alarm is activated. If the general fault alarm is activated, the mixer shall shut off.

Interlocks:

None.

Alarms:

The following alarms shall be provided: A HIGH level alarm shall alert the operator at SCADA that the RAS level in the De-Ox basins is abnormally high.

A general fault alarm for each mixer shall be provided for indication at SCADA.

END OF CONTROL STRATEGY 303

304. AERATION BLOWERS

Reference Drawing: 30-I-604

Description:

The aeration blowers provide air to the aeration basins to satisfy biological oxygen demand (BOD) of the micro-organisms. Aeration air is provided by three multi-stage variable speed centrifugal blowers. The discharges of the blowers are connected to a common header that supplies the Aeration Basins. Each aeration blower shall be furnished with a vendor provided local control panel and PLC. The individual blower control is provided by the vendor control panel. LCP-2000 shall provide coordination of the blower system and overall control so as to maintain a constant air pressure on the aeration system.

Local Manual Controls:

Local control for the aeration blowers is as described in specification Section 11485.

Local Automatic Control Mode:

Local control for the aeration blowers is as described in specification Section 11485.

SCADA Manual Control Mode:

A software HAND-OFF-AUTO switch for each blower shall be provided in the SCADA software. When the HAND-OFF-AUTO switch on the individual Aeration Blower control panel is placed in the AUTO position, the HAND-OFF-AUTO switch in the SCADA software shall have full control of the operation of the blower. When the software HAND-OFF-AUTO switch is placed in the HAND position the blower shall run continuously based on the manual speed setpoint entered by the operator. If the switch is placed in OFF the blower shall stop running.

SCADA Automatic Control Mode:

A software HAND-OFF-AUTO switch for each blower shall be provided in the SCADA software. When the HAND-OFF-AUTO switch on the individual Aeration Blower control panel is placed in the AUTO position, the HAND-OFF-AUTO switch in the SCADA software shall have full control of the operation of the blower. When the switch is placed in the AUTO position, the blower system shall vary speed to maintain a pressure setpoint based on the aeration header pressure (PIT-3040). This pressure setpoint shall be operator adjustable and shall initially be set at 6.4 psi. If the pressure drops below an operator adjustable pressure setpoint (initially set at 6.2 psi) for more than 30 seconds and the lead blower is running at 100%, the lag blower shall be started. If the pressure increases over the lag stop setpoint (initially set at 6.4 psi) and the blowers are running below an operator adjustable minimum speed setpoint, the lag blower shall be turned off. The lead blower may be operator selected or set to alternate. In the alternation mode the blowers shall alternate every 24 hours, based on an operator selected time of day. The operator may select the hour that the blowers will alternate. This shall be settable from 0 to 23.

Interlocks:

None.

Alarms:

Alarms shall be as shown on the P&IDs.

END OF CONTROL STRATEGY 304

311. POST ANOXIC TANKS

Reference Drawing: 31-I-601

Description:

The Post Anoxic Basin Trains system consists of two Post Anoxic Tanks and a Post Anoxic Tank drain pump. Each Post Anoxic Tank contains a constant-speed mixer and a level transmitter for tank level indication at SCADA.

Local Controls:

When the respective mixer HAND-OFF-AUTO selector switch is placed in HAND mode at the MCC, the mixer shall run constantly.

When the Post Anoxic Tank Drain Pump HAND/OFF/AUTO selector switch is placed in HAND mode at the MCC, the pump shall run constantly.

Local Automatic Control Mode:

There are no local automatic controls for this system.

SCADA Manual Control Mode:

A software HAND-OFF-AUTO switch shall be provided in the SCADA software for each mixer. When the HAND-OFF-AUTO switch on the MCC is placed in the AUTO position, the HAND-OFF-AUTO switch in the SCADA software shall have full control of the operation of the respective mixer. When the software HAND-OFF-AUTO switch is placed in the HAND position the mixer shall run continuously.

A software HAND-OFF-AUTO switch shall be provided in the SCADA software for the Post Anoxic Drain Pump. When the HAND-OFF-AUTO switch on the MCC is placed in the AUTO position, the HAND-OFF-AUTO switch in the SCADA software shall have full control of the operation of the Post Anoxic Drain Pump. When the software HAND-OFF-AUTO switch is placed in the HAND position the pump shall run continuously.

SCADA Automatic Control Mode:

A software HAND-OFF-AUTO switch shall be provided in the SCADA software for each mixer. When the HAND-OFF-AUTO switch on the MCC is placed in the AUTO position, the HAND-OFF-AUTO switch in the SCADA software shall have full control of the operation of the respective mixer. When the switch is placed in the AUTO position the mixer shall run continuously unless a general fault alarm is activated.

A software HAND-OFF-AUTO switch shall be provided in the SCADA software for the Post Anoxic Drain Pump. When the HAND-OFF-AUTO switch on the MCC is placed in the AUTO position, the HAND-OFF-AUTO switch in the SCADA software shall have full control of the operation of the Post Anoxic Drain Pump. When the switch is placed in the AUTO position the pump shall start when the high level float is activated and stop when the low level float is activated.

Interlocks:

There shall be hardwired interlocks provided in the vendor packages for the mixers and for the post anoxic tank drain pump.

Alarms: The following alarms shall be provided:

A general fault alarm for mixer MX-3111 shall be provided for indication at SCADA.

A general fault alarm for mixer MX-3112 shall be provided for indication at SCADA.

A general fault alarm for the Post Anoxic Tank Drain Pump P-3112 shall be provided for indication at SCADA.

END OF CONTROL STRATEGY 311

401. MBR FEED PUMP STATION

Reference Drawing: 40-I-601

Description:

The MBR Feed Pump Station contains four submersible centrifugal pumps with Variable Frequency Drives. Sequentially, the pumps will be hardwired through the local control panel. The level in the wet well is detected by redundant continuous level transmitters LIT-4010-1 and LIT-4010-2 with back up hardwired relay logic.

The pump station will normally be controlled by the master control panel (LCP-2000). The pumps are variable frequency drive (VFD) motor starters to allow the pump station flow match the incoming mixed liquor. Each of the VFDs will have the ability to be operated manually and independent of the Pump Station Control Panel. The flow rate from the MBR PLC (VCP-5000) OR the flow rate from the Influent Pump Station shall be used to control flow into the MBR Feed wet well. A software selector switch shall be provided to determine whether to control flow from the MBR PLC or from the Influent Pump Station.

Local Controls:

Each motor starter is to include: H-O-A, Run, Off, Fault lights, Pump Fail light, and reset pushbutton. Each motor starter shall run independently of the Pump Station PLC, with the pump protective relays, when in the Hand position. When placed in the Off position the pump shall stop. There are no low level interlocks in the Hand mode.

Local Automatic Control Mode:

There is no local automatic control.

SCADA Manual Control Mode:

A software HAND-OFF-AUTO switch shall be provided in the SCADA software for each MBR Feed Pump. When the HAND-OFF-AUTO switch on the MCC is placed in the AUTO position, the HAND-OFF-AUTO switch in the SCADA software shall have full control of the operation of the respective MBR Feed Pump. When the software HAND-OFF-AUTO switch is placed in the HAND position the pump shall run continuously using the manual speed selected on the VFD.

SCADA Automatic Control Mode:

The Automatic control of the pump station will primarily be based on the flow rate setpoint transmitted from the MBR control system in VCP-5000. Alternately the flow rate can be set to look at the influent pump station flow rate. In this mode a multiplier may be used to allow the operator to choose a multiplier of the influent flow rate as the desired flow rate for the pump station. In either mode the pumps will run to maintain the flow rate setpoint. When a single pump is not able to keep up with the desired flow rate, deemed by a pump running at 100% speed for greater than 60 seconds, a second pump should be called for. If two pumps are unable to keep up with the flow rate demand, a third pump may be called to run. The reverse is true for decreasing flow rates. If the pumps run at minimum speed (determined at startup with the pump manufacturer) for greater than 60 seconds, the additional pump shall shut down. The primary function of

the pump station is to match the flow rate desired. The level should not be a controlling factor since the station is essentially pumping back to itself through the process. However, if the level reaches a high level setpoint (LSH-4010), the pumps should increase speed or an additional pump should be called to run in order to reduce the wet well level. The additional pumps should continue to run until the wet well level reaches a medium wet well level setpoint (LSM-4010). If the wet well level reaches a low level setpoint (LSL-4010) the running pumps shall reduce to minimum speed. If the level continues to drop to the low low level setpoint (LSLL-4010) the pumps should shut down. The pumps may continue to operate on flow rate mode once the level returns to the medium level setpoint (LSM-4010). Each of these levels shall be operator adjustable. The control loop shall be tuned to minimize unwanted speed fluctuations for a stable operation. From SCADA, using the Auto Alternation hand switch the lead pump can be selected manually or the automatic alternation mode selected.

Where adjustable set points and times are used in the descriptions above, values are initial settings. During startup, field-determine the final settings in conjunction with the Owner as necessary.

Interlocks:

Should the PLC fail the backup relay logic will control the pumps based on the level setpoints and the VFD's when called for will operate at 100% speed. Should the PLC fail an output will de-energize the first output of the PLC turning off the PLC Fault relay. This enables the pump station to operate using the back up relay logic. The LIT shall be operator selectable using the panel mounted selector switch on the Pump Station Control Panel inner door. Should the lead pump fail the standby pump shall operate. When the level in the wet well rises and trips LSH (closes) the lead pump starts. The pump will continue to operate until the LSL setpoint opens. Should a pump fault occur the respective pump shall shut down and the standby pump shall operate. Provide a hand switch on the OIT to allow the relay logic to be tested. When in the test mode the PLC fail output will turn off and the relay logic shall resume operation until the test mode is returned to normal PLC control. This status shall be indicated on the SCADA system. Should the PLC fail the backup relay logic shall resume the pump station operation and a communications alarm will be indicated on the SCADA system since communication to the PLC will be lost. In the backup mode the Lead pump is always Pump No. 1, the Lag pump is Pump No. 2, the Lag-Lag Pump is Pump No. 3 and the Standby pump is Pump No. 4 (this is also the LSHH setpoint or HI Level Alarm. Should a pump fail to start the alarm will be indicated on the respective pump motor starter. As the level rises the next pump will come on when the respective setpoint switch is reached.

Alarms: The following alarms shall be provided:

As shown on the P&IDs

END OF CONTROL STRATEGY 401

513-1. PLANT WATER PUMPS

Reference Drawing: 51-I-603

Description:

There are two constant speed plant water pumps which pump No.3 water from UV effluent channel into the plant water distribution system that supplies plant water to the various plant water demands. A hydropneumatic tank is provided as part of the distribution system to provide storage volume. The pumps shall be operated based on a pressure setpoints at the Plant Water Hydropneumatic Tank (PIT-5140) as indicated by SCADA. Monitoring of the EFFLUENT/REUSE WATER PUMP STATION shall be as shown on the P&IDs and as described in the I/O schedule.

Local Controls:

Local control for the Effluent and Reuse Water Pump Station is performed by placing the individual pump HAND-OFF-AUTO selector switch on the MCC-C to the HAND mode to start the pump and to the OFF mode to stop the pump.

Local Automatic Control Mode:

There are no local automatic controls for the Plant Water Pumps.

SCADA Manual Control Mode:

When the HAND-OFF-AUTO switch for each pump at the MCC is in AUTO mode, the SCADA system may have manual control of the pump. The pump can manually be started by placing the software HAND-OFF-AUTO selector switch in the HAND mode. The pump may be stopped by placing the software HAND-OFF-AUTO selector switch in the OFF mode.

SCADA Automatic Control Mode:

The pumps can be controlled automatically by the plant SCADA system by placing the individual HAND-OFF-AUTO selector switch to the AUTO mode. The PLC shall use the values obtained from hydropneumatic tank pressure transmitter (PIT-5140) to turn start and stop the pumps. When commanded by the hydropneumatic tank, a second pump shall operate.

The lead pump is selectable by a selector in the SCADA. This may also be set to automatic alternation. In this mode the lead pump shall alternate each run cycle.

Interlocks:

The pumps shall not run if the low level switch (LSL-5130) is activated. Once the level returns to normal the pumps shall wait 5 minutes to resume operation.

Alarms: The following alarms shall be provided:

As shown on the P&IDs.

END OF CONTROL STRATEGY 513-1

513-2. REUSE PUMPS

Reference Drawing: 51-I-603

Description: There are 2 constant speed reuse water pumps which pump No.3 water from the Effluent Channel to the Offsite Golf Course. The constant speed pumps shall pump a volume of flow each day by using a flow total setpoint.

Local Controls:

Local control for the Reuse Water Pump Station is performed by placing the individual pump HAND-OFF-AUTO selector switch to the HAND mode to start the pump and to the OFF mode to stop the pump.

Local Automatic Control Mode: There are no local automatic controls for the recycled water pumps.

SCADA Manual Control Mode: The following SCADA controls shall be furnished:

A software HAND-OFF-AUTO switch shall be provided in the SCADA software for each Reuse Water Pump. When the HAND-OFF-AUTO switch on the MCC-C is placed in the AUTO position, the HAND-OFF-AUTO switch in the SCADA software shall have full control of the operation of the respective Reuse Pump. When the software HAND-OFF-AUTO switch is placed in the HAND position the pump shall run continuously.

SCADA Automatic Control Mode:

The pumps can be controlled automatically by the plant SCADA system by placing the individual HAND-OFF-AUTO selector switch to the AUTO mode. The pumps shall deliver a predetermined volume of water to an offsite golf course daily. This operator adjustable volume shall be based on the pump flow (FIT-5130). The operator shall have a start hour setpoint (set from 0 to 23) that will be used to select the hour upon which the pumps will start. At this time each day a single pump will start and deliver the desired flow total to the golf course. The lead pump is selectable by a selector in the SCADA. This may also be set to automatic alternation. In this mode the lead pump shall alternate each run cycle.

Interlocks: The following interlocks shall be made:

The pumps shall not run if the low level switch (LSL-5130) is activated. Once the level returns to normal the pumps shall wait 5 minutes to resume operation.

Alarms: The following alarms shall be provided:

As shown on the P&IDs.

END OF CONTROL STRATEGY 513-2

514. HYDROPNEUMATIC TANK SYSTEM

Reference Drawing: 51-I-604

Description:

The plant water hydropneumatic tank system consists of a hydropneumatic tank (ASME pressure vessel with no bladder). A separate air compressor system with a vendor provided control panel is to be supplied and operated separately.

Local Controls:

There is no local control for the tank.

Local Automatic Control Mode:

There is no local automatic control for the tank.

SCADA Manual Control Mode:

There is no SCADA Manual Control Mode of the Hydropneumatic tank system.

SCADA Automatic Control Mode:

The hydropneumatic tank system shall monitor the level and pressure inside the tank to command the plant water pumps to start and stop and to increase the air pressure in the tank. The tank pressure (PIT-5140) and tank level (LIT-5140) are monitored by new instrumentation. When the tank pressure reaches a low pressure setpoint (PSL-5140) the plant water pumps will turn start. When the tank pressure returns to the high pressure setpoint (PSH-5140) the pumps will stop. If the pressure reaches a low low level (PSLL-5140) both plant water pumps will run.

When the level in the tank reaches a middle 2 level (LSM2-5140) the air solenoid valve (SV-5140 will be opened to reduce the water level. When the level reaches the middle 1 level (LSM1-5140) the solenoid valve will close.

Level and pressure setpoints to be coordinated with ENGINEER during startup.

Interlocks:

If the tank level reaches a high level setpoint (LSM1-5140) the pumps should stop.

If the tank pressure reaches a high pressure setpoint (PSH-5140) the solenoid valve (SV-5140) should close.

Alarms: The following alarms shall be provided:

As shown on the P&IDs.

END OF CONTROL STRATEGY 514

521. SODIUM HYDROXIDE FEED SYSTEM

Reference Drawing: 52-I-601

Description: There are 3 variable speed peristaltic chemical pumps to feed Sodium Hydroxide into Biological Basins 1 and 2 and the MBR Feed Channel. Each Feed pump is operated automatically by the respective PLC in order to deliver a setpoint flow to each of the respective areas. The pumps are automatically started when MBR flow is detected and then controlled automatically by the PLC in a lead/lag/duty standby configuration. Two Bulk Storage Tanks are provided with level detection in each tank permit the pumps to run. Using a software PID controller, the respective PLC will flow pace based on the MBR flow rate. The chemical sump contains a high level detection switch (LSH-5210) to notify the operator of a liquid presence in the containment area.

Local Controls: Local control for each of the Sodium Hydroxide metering pumps is performed by placing the individual pump HAND/OFF/AUTO selector switch to the HAND mode to start the metering pump and into the OFF mode to stop the pump. The speed of the metering pump will be made by adjusting the local potentiometer at the variable speed drive (VFD) panel.

The Bulk Storage Tanks include a common Truck Fill Station (LCP-5200). The truck fill station provides local indication of each of the tank levels and includes a High-High Level Alarm light for each of the tanks; if either of the High-High level alarms is activated the common strobe will flash and horn will sound. The High-High Level Alarm is also indicated in the SCADA system.

Local controls for the Sodium Hydroxide Feed Pumps are as described in specification Section 11381.

Local Automatic Control Mode: There is no Local Automatic Control of the Sodium Hydroxide Feed System.

SCADA Manual Control Mode: The following SCADA controls shall be furnished:

The chemical metering pumps shall each have controls at the MCC. When the HAND/OFF/AUTO switch for each pump at the MCC is in HAND or OFF mode, the SCADA system receives a NOT IN AUTO status input from the LCP for indication of NOT IN AUTO at the SCADA The pump speed can be remotely manually adjusted from the operator workstation with the speed HAND/AUTO graphic at the HMI while in the MANUAL mode at the VFD and entering a speed value at the speed control field with a 0-100% speed setting.

SCADA Automatic Control Mode:

Pump 1 shall deliver chemical solution to the MBR feed channel. Pump 3 shall deliver solution to the biological basins. Pump 2 shall have an operator adjustable selector switch to allow the pump to be controlled based on either of these delivery points. The adjustment of where each pump shall deliver chemical shall be based on manual adjustment of the discharge ball valves.

Dosage control - Pumps shall be flow paced to the MBR flowmeter (FIT-4010) or influent flow rate (FIT-2010) based on an operator selection to provide the operator selected dosage in mg/L. Based on the pump characteristics and flow pacing signal, the PLC will

calculate the required pump speed to provide the selected dosage. Metering pump speed feedback will be monitored by the PLC and displayed at the operator workstation. Duty pump failover –The PLC shall switchover to the standby pump upon failure of the duty pump.

The operator shall input the desired sodium hydroxide dosage for each application point and the concentration of sodium hydroxide solution at the operator workstation, and the PLC shall calculate required feed rate (in gph) based on flow and yield a 4-20 mA output signal to the duty metering pump. The following formula shall be used to calculate the chemical feed rate in flow pacing mode:

Feed Rate (gph) = [Product Dosage (ppm) x 8.34 x Flow Rate] / [Solution Density (lbs/gal) x Solution Strength (% w/w) / 100 x 24 (hr/day)]

Interlocks: The following interlocks shall be made:

A low-low level at the respective bulk tank will shut the pumps down via software interlock and send an alarm if the level falls below its set point. The pump station will restart automatically when the level rises above the set point deadband.

Hardwired interlocks will shut down the respective pump and send an alarm on High Discharge Pressure or seal leak detected.

Alarms: The following alarms shall be provided:

The sodium hypochlorite bulk storage tanks and day tank has a HIGH LEVEL and LOW LEVEL alarm status input provided to the SCADA system for indication at the operator workstation.

Each metering pump has a common FAIL alarm status input provided to the SCADA system for indication at the operator workstation.

The containment area has a sump HIGH LEVEL alarm status input provided to the SCADA system for indication at the operator workstation.

If either of the bulk tanks reaches a HIGH-HIGH level setpoint, an alarm shall alert the operator at SCADA to service the respective bulk tank.

END OF CONTROL STRATEGY 521

522. ACETIC ACID FEED SYSTEM

Reference Drawing: 52-I-602

Description:

There is 1 set of 2 variable speed peristaltic chemical pumps for feeding acetic acid to the biological basins. These pumps are operated automatically, flow paced by the respective PLC based on the influent pump station or permeate flow rates. The pumps are automatically started when flow is detected and then controlled automatically by the PLC in a duty standby configuration. There is one Acetic Acid Bulk Storage Tank with level detection in each tank to permit the pumps to run. If flow rises or falls out of an operator selected flow band, the flow pace signal may be automatically trimmed upward or downward by the PLC proportional to fermentation flow. The chemical sump shall have a high level detection switch (LSH-5220) to notify the operator of a liquid presence in the containment area.

Local Controls:

Local control for each of the acetic acid metering pumps is performed by placing the individual pump HAND/OFF/AUTO selector switch to the HAND mode to start the metering pump and into the OFF mode to stop the pump. The speed of the metering pump will be made by adjusting the local potentiometer at the variable speed drive (VFD) panel.

The Bulk Storage Tank includes a common Truck Fill Station for all chemical systems (LCP-5200). The truck fill station provides local indication of the tank level and includes a High-High Level Alarm light for the tank; if the High-High level alarm is activated the common strobe will flash and horn will sound. The High-High Level Alarm is also indicated in the SCADA system.

Local controls for the Acetic Acid Feed Pumps is as described in specification Section 11381.

Local Automatic Control Mode: There are no local automatic controls for the acetic acid metering pumps.

SCADA Manual Control Mode: The following SCADA controls shall be furnished:

The chemical metering pumps shall each have a Control Panel at the MCC. When the HAND/OFF/AUTO switch for each pump at the MCC is in HAND or OFF mode, the SCADA system receives a NOT IN AUTO status input from the LCP for indication of NOT IN AUTO at the operator workstation. The pump speed can be remotely manually adjusted from the operator workstation with the speed HAND/AUTO graphic at the HMI while in the MANUAL mode at the VFD and entering a speed value at the speed control field with a 0-100% speed setting.

SCADA Automatic Control Mode:

All pumps shall be controlled to flow pace based on the influent flow rate signal (FIT-2010).

Dosage control - Pumps shall be flow paced to the fermentation basin to provide the operator selected dosage in mg/L. Based on the pump characteristics and flow pacing signal, the PLC will calculate the required pump speed to provide the selected dosage. Duty pump failover –The PLC shall switchover to the standby pump upon failure of the duty pump.

The operator shall input the desired acetic acid dosage for the application point and the concentration of acetic acid solution at the operator workstation, and the PLC shall calculate required feed rate (in gph) based on flow and yield a 4-20 mA output signal to the duty metering pump. The following formula shall be used to calculate the chemical feed rate in flow pacing mode:

Feed Rate (gph) = [Product Dosage (ppm) x 8.34 x Flow Rate] / [Solution Density (lbs/gal) x Solution Strength (% w/w) / 100 x 24 (hr/day)]

Interlocks: The following interlocks shall be made:

A low-low level at the respective tank will shut the pumps down via software interlock and send an alarm if the level falls below its set point. The pump station will restart automatically when the level rises above the set point deadband.

Hardwired interlocks will shut down the respective pump and send an alarm on High Discharge Pressure or seal leak detected.

Alarms: The following alarms shall be provided:

The Acetic Acid bulk storage tank has a HIGH LEVEL and LOW LEVEL alarm status input provided to the SCADA system for indication at the operator workstation.

Each metering pump has a common FAIL alarm status input provided to the SCADA system for indication at the operator workstation.

The containment area has a sump HIGH LEVEL alarm status input provided to the SCADA system for indication at the operator workstation.

If the bulk tank reaches a HIGH-HIGH level setpoint, an alarm shall alert the operator at SCADA.

END OF CONTROL STRATEGY 522

523. SODIUM HYPOCHLORITE FEED SYSTEM

Reference Drawing: 52-I-603

Description:

There are 3 variable speed sodium hypochlorite peristaltic chemical pumps. Pump 1 doses into the MBR, pump 2 doses to the membrane thickening system, and pump 3 doses into the offsite reuse pump station. Pumps are operated automatically, flow paced by the respective PLC based on either the MBR flow rate for P-5231 or the offsite reuse pump flow rate for P-5233. The pumps are automatically started when flow is detected by the PLC. There is one Sodium Hypochlorite Bulk Storage Tank with level detection to permit the pumps to run. If flow rises or falls out of an operator selected flow band, the respective flow pace signal may be automatically trimmed upward or downward by the PLC proportional to the respective flow signal. The chemical sump shall have a high level detection switch (LSH-5230) to notify the operator of a liquid presence in the containment area.

Local Controls:

Local control for each of the sodium hypochlorite metering pumps is performed by placing the individual pump HAND/OFF/AUTO selector switch to the HAND mode to start the metering pump and into the OFF mode to stop the pump. The speed of the metering pump will be made by adjusting the local potentiometer at the variable speed drive (VFD) panel.

The Bulk Storage Tank includes a common Truck Fill Station (LCP-5200). The truck fill station provides local indication of the tank level and includes a High-High Level Alarm light for the tank; if the High-High level alarm is activated the common strobe will flash and horn will sound. The High-High Level Alarm is also indicated in the SCADA system.

Local control for the Sodium Hypochlorite Feed Pumps is as described in specification Section 11381.

Local Automatic Control Mode:

There are no local automatic controls for the sodium hypochlorite metering pumps.

SCADA Manual Control Mode: The following SCADA controls shall be furnished:

The chemical metering pumps shall each have controls at the MCC. When the HAND/OFF/AUTO switch for each pump at the MCC is in HAND or OFF mode, the SCADA system receives a NOT IN AUTO status input from the LCP for indication of NOT IN AUTO at the operator workstation. The pump speed can be remotely manually adjusted from the operator workstation with the speed HAND/AUTO graphic at the HMI while in the MANUAL mode at the VFD and entering a speed value at the speed control field with a 0-100% speed setting.

SCADA Automatic Control Mode:

Pump 5231 doses into the MBR, pump 5232 doses to the membrane thickening system, and pump 5233 doses into the offsite reuse pump station. Pump 1 and 2 shall have an operator adjustable selector switch to allow the pump to be controlled based on either of

these delivery points. The adjustment of where each pump shall deliver chemical shall be based on manual adjustment of the discharge ball valves.

Dosage control - Pumps shall be flow paced to the respective flowmeter to provide the operator selected dosage in mg/L. Based on the pump characteristics and flow pacing signal, the PLC will calculate the required pump speed to provide the selected dosage.

The operator shall input the desired sodium hypochlorite dosage for the application point and the concentration of sodium hypochlorite solution at the operator workstation, and the PLC shall calculate required feed rate (in gph) based on flow and yield a 4-20 mA output signal to the duty metering pump. The following formula shall be used to calculate the chemical feed rate in flow pacing mode:

Feed Rate (gph) = [Product Dosage (ppm) x 8.34 x Flow Rate] / [Solution Density (lbs/gal) x Solution Strength (% w/w) / 100 x 24 (hr/day)]

Interlocks: The following interlocks shall be made:

A low-low level at the respective tank will shut the pumps down via software interlock and send an alarm if the level falls below its set point. The pump station will restart automatically when the level rises above the set point deadband.

Hardwired interlocks will shut down the respective pump and send an alarm on High Discharge Pressure or seal leak detected.

Alarms: The following alarms shall be provided:

The Acetic Acid bulk storage tank has a HIGH LEVEL and LOW LEVEL alarm status input provided to the SCADA system for indication at the operator workstation.

Each metering pump has a common FAIL alarm status input provided to the SCADA system for indication at the operator workstation.

The containment area has a sump HIGH LEVEL alarm status input provided to the SCADA system for indication at the operator workstation.

If the bulk tank reaches a HIGH-HIGH level setpoint, an alarm shall alert the operator at SCADA.

END OF CONTROL STRATEGY 523

525. FERRIC CHLORIDE FEED SYSTEM

Reference Drawing: 52-I-605

Description:

There are 2 variable speed ferric chloride peristaltic chemical pumps. Pump5251 doses into Biological Trains 1 and 2, and pump5252 doses into the MBR Feed channel. Pumps are operated automatically, flow paced by the respective PLC based on either the MBR flow rate for P-5252 or Biological Trains 1 and 2 flow rate for P-5251. The pumps are automatically started when MBR or Biological Train flows are detected by the PLC. There is one Ferric Chloride Bulk Storage Tank with level detection to permit the pumps to run. If flow in either the MBR or Biological train 1 and 2 rises or falls out of an operator selected flow band, the respective flow pace signal may be automatically trimmed upward or downward by the PLC proportional to the respective flow signal. The chemical sump shall have a high level detection switch (LSH-5250) to notify the operator of a liquid presence in the containment area.

Local Controls:

Local control for each of the sodium hypochlorite metering pumps is performed by placing the individual pump HAND/OFF/AUTO selector switch to the HAND mode to start the metering pump and into the OFF mode to stop the pump. The speed of the metering pump will be made by adjusting the local potentiometer at the variable speed drive (VFD) panel.

The Bulk Storage Tank includes a Truck Fill Station (LCP-5200). The truck fill station provides local indication of the tank level and includes a High-High Level Alarm light for the tank; if the High-High level alarm is activated the common strobe will flash and horn will sound. The High-High Level Alarm is also indicated in the SCADA system.

Local control for the Ferric Chloride Feed Pumps is as described in specification Section 11381.

Local Automatic Control Mode: There are no local automatic controls for the ferric chloride metering pumps.

SCADA Inputs/Manual Control Mode: The following SCADA inputs and controls shall be furnished:

The chemical metering pumps shall each have a Control Panel at the MCC. When the HAND/OFF/AUTO switch for each pump at the MCC is in HAND or OFF mode, the SCADA system receives a NOT IN AUTO status input from the LCP for indication of NOT IN AUTO at the operator workstation. The pump speed can be remotely manually adjusted from the operator workstation with the speed HAND/AUTO graphic at the HMI while in the MANUAL mode at the VFD and entering a speed value at the speed control field with a 0-100% speed setting.

SCADA Automatic Control Mode:

Pump-5251 shall be controlled to flow pace based on the Biological Trains 1&2 flow rate signal FE/FIT-xxxx. Pump 5252 shall be controlled to flow pace based on the MBR flow rate FE/FIT-4010.

Dosage control - Pumps shall be flow paced to the respective flowmeter to provide the operator selected dosage in mg/L. Based on the pump characteristics and flow pacing signal, the PLC will calculate the required pump speed to provide the selected dosage.

The operator shall input the desired ferric chloride dosage for the application point and the concentration of ferric chloride solution at the operator workstation, and the PLC shall calculate required feed rate (in gph) based on flow and yield a 4-20 mA output signal to the duty metering pump. The following formula shall be used to calculate the chemical feed rate in flow pacing mode:

Feed Rate (gph) = [Product Dosage (ppm) x 8.34 x Flow Rate] / [Solution Density (lbs/gal) x Solution Strength (% w/w) / 100 x 24 (hr/day)]

Interlocks: The following interlocks shall be made:

A low-low level at the respective tank will shut the pumps down via software interlock and send an alarm if the level falls below its set point. The pump station will restart automatically when the level rises above the set point deadband.

The chemical dosing shall be interlocked with the influent flow regardless of which pacing method is being used. If the influent flow drops below an operator adjustable setpoint then the ferric chloride flow shall stop for an operator adjustable period of time.

Hardwired interlocks will shut down the respective pump and send an alarm on High Discharge Pressure or seal leak detected.

Alarms: The following alarms shall be provided:

The ferric chloride bulk storage tank has a HIGH LEVEL and LOW LEVEL alarm status input provided to the SCADA system for indication at the operator workstation.

Each metering pump has a common FAIL alarm status input provided to the SCADA system for indication at the operator workstation.

The containment area has a sump HIGH LEVEL alarm status input provided to the SCADA system for indication at the operator workstation.

If the bulk tank reaches a HIGH-HIGH level setpoint, an alarm shall alert the operator at SCADA.

END OF CONTROL STRATEGY 524

601. PLANT DRAIN PUMP STATION

Reference Drawing: 60-I-601

Description:

The Pump Station contains two constant speed submersible centrifugal pumps. Sequentially, the pumps will be hardwired through local control panel. The level in the wet well is detected by redundant continuous level transmitters LIT-6010-1 and LIT-6010-2 with back up hardwired relay logic. The pump station will normally be controlled by the master control panel (LCP-2000). The pumps will start and stop based on the wet well level set points. A float switch (LSHH-2020) shall be provided to alarm SCADA upon High High level in the wetwell. A magnetic flow meter (FE/FIT-6010) shall be provided to measure flow out of the pump station.

Local Manual Controls:

Each motor starter is to include: HOA, Run, Off, Fault lights, Pump Fail light, and reset pushbutton. Each motor starter shall run independently of the Pump Station PLC, with the pump protective relays, when in the Hand position. When placed in the Off position the pump shall stop. There are no low level interlocks in the Hand mode.

Local Automatic Control Mode:

Under normal operating conditions, the Pump Station pumps operate automatically through the Pump Station Control Panel PLC. Automatic alternation, Lead and Lag pumps are selected by switch HS-6010 located on SCADA. The pumps operate in with the continuous level transmitter. Should the level transmitter fail (over or under range) a Level Transmitter Fault shall be indicated and the PLC will continue to operate the pumps by using the backup Level Transmitter. The level control method is selectable, PLC or backup relay logic Mode; the PLC mode is the normal mode of operation.

SCADA Manual Control Mode:

Each pump has a software HAND-OFF-AUTO selector switch to manually run the respective pump in hand or place in the Off mode to take out of service.

SCADA Automatic Control Mode:

From SCADA, using the Auto Alternation hand switch the lead pump can be selected manually or the automatic alternation mode selected.

Under normal operating conditions, the Pump Station pumps operate automatically through the PLC. Automatic alternation, lead, and standby pumps are selected by software selection on the SCADA. The OIT includes for each pump: HOA, run, fault and auto mode indication. The pumps operate in with the continuous level transmitter as listed below. Should the level transmitter fail (over or under range) a Level Transmitter Fault shall be indicated and the PLC will continue to operate the pumps by using the back up floats. In this method of control, Mode 2 below is not available. The level control method is selectable, LIT or Float Mode; the LIT (level transmitter) mode is the normal mode of operation.

The lead pump runs based on the start and stop level set points. The standby pump runs only if the lead pump fails. When the level in the wet well rises to a preset level set point, LSH-6010 the lead pump starts. The lead pump will continue to run until the low level switch LSL-6010 is reached, the pump is to then stop. With the Lead Pump Selector Switch in the Alternation mode, as each pump stops the next pump in line becomes the lead pump and the last pump in the sequence becomes the standby pump. Should the duty pump not run when called for after 5 seconds (this is set during startup) a pump fault shall be indicated and the standby pump shall operate. Should a duty pump be in the failed mode it shall be indicated and taken out of the alternation sequence.

Should the LIT fail the PLC will control the pumps based on the float status as these are inputs to the PLC. Should the PLC fail an output will de-energize the first output of the PLC turning off the PLC Fault relay. This enables the pump station to operate using the backup float relay logic. The lead pump shall be operator selectable using the panel mounted selector switch on the Pump Station Control Panel inner door. Should the lead pump fail the standby pump shall operate. When the level in the wet well rises and trips LSH (closes) the lead pump starts. The pump will continue to operate until the LSL float opens. Should a pump fault occur the respective pump shall shut down and the standby pump shall operate. Provide a hand switch on the OIT to allow the relay logic to be tested. When in the test mode the PLC fail output will turn off and the float relay logic shall resume operation for one cycle and then return to the PLC control. This status shall be indicated on the SCADA system.

Each motor starter is to include: HOA, run, off, fault light, pump moisture light, pump over-temperature light and reset pushbutton. Each motor starter shall run independently of the Pump Station PLC, with the pump protective relays, when in the Hand position. There are no low level interlocks in this mode. Each pump will provide to the PLC: Auto mode, Run and Fault status.

Where adjustable set points and times are used in the descriptions above, values are initial settings. During startup, field-determine the final settings in conjunction with the Owner as necessary.

Interlocks:

Should the PLC fail the backup relay logic will control the pumps based on the level setpoints. Should the PLC fail an output will de-energize the first output of the PLC turning off the PLC Fault relay. This enables the pump station to operate using the backup relay logic. The LIT shall be operator selectable using the panel mounted selector switch on the Pump Station Control Panel inner door. Should the lead pump fail the standby pump shall operate. When the level in the wet well rises and trips LSH (closes) the lead pump starts. The pump will continue to operate until the LSL setpoint opens. Should a pump fault occur the respective pump shall shut down and the standby pump shall operate. Provide a hand switch on the OIT to allow the relay logic to be tested. When in the test mode the PLC fail output will turn off and the relay logic shall resume operation until the test mode is returned to normal PLC control. This status shall be indicated on the SCADA system. Should the PLC fail the backup relay logic shall resume the pump station operation and a communications alarm will be indicated on the SCADA system since communication to the PLC will be lost. In the backup mode the Lead pump is always Pump No. 1 and the Lag pump is Pump No. 2. Should a pump fail to start the alarm will be indicated on the respective pump motor starter. As the level rises the next pump will come on when the respective setpoint switch is reached.

Each submersible pump shall have software interlocks to shut off the associated pump upon high-high moisture and high temperature.

Each submersible pump shall have hardwired interlocks to shut off the associated pump when the high motor temperature or moisture intrusion switches activate. RTD and leak detection modules shall be provided in the MCC to accommodate this interlock. RTD and Leak Detection Modules shall be provided by pump supplier.

Each submersible pump shall have a moisture monitor to be monitored by the PLC at SCADA. Software interlock shall shutdown the respective pump upon high moisture.

END OF CONTROL STRATEGY 601

END OF SECTION

SECTION 8
GENERAL CONDITIONS

00800-1 FAMILIARITY WITH SITE

Execution of this agreement by the Contractor is a representation that the Contractor has visited the site, has become familiar with the local conditions under which the work is to be performed, and has correlated personal observations with the requirements of this agreement.

00800-2 CONTRACT DOCUMENTS

This agreement consists of Owner's invitation for bid, instructions to bidders, bid form, performance bond, payment bond, acknowledgments, the contract, general conditions, special conditions, specifications, plans, drawings, exhibits, addenda, and written change orders.

A. Notice of Award of Contract:

B. Execution of Contract Documents

Upon notification of Award of Contract, the Owner shall furnish the Contractor the conformed copies of Contract Documents for execution by the Contractor and the Contractor's surety.

Within ten (10) days after receipt the Contractor shall return all the documents properly executed by the Contractor and the Contractor's surety. Attached to each document shall be an original power-of-attorney for the person executing the bonds for the surety and certificates of insurance for the required insurance coverage.

After receipt of the documents executed by the Contractor and his surety with the power-of-attorney and certificates of insurance, the Owner shall complete the execution of the documents. Distribution of the completed documents will be made upon completion.

Should the Contractor and/or Surety fail to execute the documents within the time specified; the Owner shall have the right to proceed on the Bid Bond accompanying the bid.

If the Owner fails to execute the documents within the time limit specified, the Contractor shall have the right to withdraw the Contractor's bid without penalty.

Drawings and Specifications:

The Drawings, Specifications, Contract Documents, and all supplemental documents, are considered essential parts of the Contract, and requirements occurring in one are as binding as though occurring in all. They are intended to define, describe and provide for all Work necessary to complete the Project in an acceptable manner, ready for use, occupancy, or operation by the Owner.

In case of conflict between the Drawings and Specifications, the Specifications shall govern. Figure dimensions on Drawings shall govern over scale dimensions, and detailed Drawings shall govern over general Drawings.

In cases where products or quantities are omitted from the Specifications, the description and quantities shown on the Drawings shall govern.

Any ambiguities or need for clarification of the Drawings or Specifications shall be immediately reported to the Construction Manager in writing. Any such ambiguity or need for clarification shall be handled by the Construction Manager in writing. No clarification of the Drawings and Specifications hereunder by the Construction Manager

shall entitle the Contractor to any additional monies unless a Change Order has been processed as provided by "Changes in the Contract" hereof.

Any work done by the Contractor following a discovery of such differing site condition or ambiguity or need for clarification in the Contract Drawings and Specifications prior to a written report to the Construction Manager shall not entitle the Contractor to additional monies and shall be done at the Contractor's risk.

The Construction Manager will furnish the Contractor five (5) copies of the Contract Drawings and the Specifications, one copy of which the Contractor shall have available at all times on the Project site.

00800-3 DEFINITIONS

The following terms as used in this agreement are defined as follows to the extent the definitions herein differ or conflict with those in the Instructions for Bidders, Section 00100, the definitions herein shall control.

Alternate bids – the amount stated in the bid or proposal to be added to or deducted from the amount of the base bid or base proposal if the corresponding change in project scope or alternate materials or methods of construction is accepted.

Base bid – the amount of money stated in the bid or proposal as the sum for which the bidder or proposer offers to perform the work.

Change Order - an alteration, addition, or deduction from the original scope of work as defined by the contract documents to address changes or unforeseen conditions necessary for project completion. A written order to the Contractor issued by the County pursuant to Fulton County Policy and Procedures 800-6 for changes in the work within the general scope of the contract documents, adjustment of the contract price, extension of the contract time, or reservation of determination of a time extension.

Construction Manager shall mean the individual designated in writing, by the Director of the Public Works Department as the Construction Manager.

Contractor shall mean the party of the second part to the Contract Agreement or the authorized and legal representative of such party.

Contract Documents include the Contract Agreement, Contractor's Bid (including all documentation accompanying the Bid and any post-Bid documentation required by the County prior to the Notice of Award), Bonds, all Special Conditions, General Conditions, Supplementary Conditions, Specifications, Drawings and addenda, together with written amendments, change orders, field orders and the Construction Manager's written interpretations and clarifications issued in accordance with the General Conditions on or after the date of the Contract Agreement.

Shop drawing submittals reviewed in accordance with the General Conditions, geotechnical investigations and soils report and drawings of physical conditions in or relating to existing surface structures at or contiguous to the site are not Contract Documents.

Contract Price - The sum specified in the Agreement to be paid to the Contractor in consideration of the Work.

Contract Time shall mean the number of consecutive calendar days as provided in the Contract Agreement for completion of the Work, to be computed from the date of Notice to Proceed.

Owner or County shall mean Fulton County Government, party of the first part to the Contract Agreement, or its authorized and legal representatives.

Day - A calendar day of twenty-four hours lasting from midnight of one day to midnight the next day.

Detention Equipment Contractor ("DEC") – Any legally chartered business entity whose primary activity is the supply and/or installation of detention hardware equipment and related systems.

Director - Director of the Public Works Department of Fulton County, Georgia or the designee thereof.

Engineer of Record – Brown and Caldwell, Inc., developed the specifications and drawings referred to herein.

Final Completion shall mean the completion of all work as required in accordance with the terms and conditions of the contract documents.

Liquidated Damages shall mean the amount, stated in the Contract Agreement, which the Contractor agrees to pay to the Owner for each consecutive calendar day beyond the Contract time required to complete the Project or for failing to comply with associated milestones. Liquidated Damages will end upon written notification from the Owner of Final Acceptance of the Project or upon written notification of from the Owner of completion of the milestone.

Notice to Proceed - A written communication issued by the County to the Contractor authorizing it to proceed with the work, establishing the date of commencement and completion of the work, and providing other direction to the Contractor.

Products shall mean materials or equipment permanently incorporated into the work.

Program Manager - Not used in this contract. Delete all references.

Project Manual - The Contract Documents.

Provide shall mean to furnish and install.

Substantial Completion - The date certified by the Construction Manager when all or a part of the work, as established pursuant to General Condition 00800-81, is sufficiently completed in accordance with the requirements of the contract documents so that the identified portion of the work can be utilized for the purposes for which it is intended.

Work or Project - All of the services specified, indicated, shown or contemplated by the contract documents, and furnishing by the Contractor of all materials, equipment, labor, methods, processes, construction and manufacturing materials and equipment, tools, plans, supplies, power, water, transportation and other things necessary to complete such services in accordance with the contract documents to insure a functional and complete facility.

00800-4 CODES

All codes, specifications, and standards referenced in the contract documents shall be the latest editions, amendments and revisions of such referenced standards in effect as of the date of the request for proposals for this contract.

00800-5 REVIEW OF CONTRACT DOCUMENTS

Before making its proposal to the County, and continuously after the execution of the agreement, the Contractor shall carefully study and compare the contract documents

and shall at once report to the Construction Manager any error, ambiguity, inconsistency or omission that may be discovered, including any requirement which may be contrary to any law, ordinance, rule, or regulation of any public authority bearing on the performance of the work. By submitting its proposal, the Contractor agrees that the contract documents, along with any supplementary written instructions issued by or through the Construction Manager that have become a part of the contract documents, appear accurate, consistent and complete insofar as can be reasonably determined. If the Contractor has timely reported in writing any error, inconsistency, or omission to the Construction Manager, has properly stopped the affected work until instructed to proceed, and has otherwise followed the instructions of the Construction Manager, the Contractor shall not be liable to the County for any damage resulting from any such error, inconsistency, or omission in the contract documents. The Contractor shall not perform any portion of the work without the contract documents, approved plans, specifications, products and data, or samples for such portion of the work. For purposes of this section "timely" is defined as the time period in which the contractor discovers, or should have discovered, the error, inconsistency, or omission, with the exercise of reasonable diligence.

00800-6 STRICT COMPLIANCE

No observation, inspection, test or approval of the County or Construction Manager shall relieve the Contractor from its obligation to perform the work in strict conformity with the contract documents except as provided in General Condition 00800-48.

00800-7 APPLICABLE LAW

All applicable State laws, County ordinances, codes, and rules and regulations of all authorities having jurisdiction over the construction of the project shall apply to this agreement. The Contractor shall comply with the requirements of any Fulton County program concerning non-discrimination in contracting. All work performed within the right of way of the Georgia Department of Transportation and any railroad crossing shall be in accordance with Georgia Department of Transportation regulations, policies and procedures and, where applicable, those of any affected railroad. The Contractor shall comply with all laws, ordinances, codes, rules and regulations bearing on the conduct of the work as specified and the Contractor agrees to indemnify and hold harmless the County, its officers, agents and employees, as well as the Construction Manager and the Program Manager against any claim or liability arising from or based on the violation of any law, ordinance, regulation, order or decree affecting the conduct of the work, whether occasioned by the Contractor, his agents or employees.

00800-8 PERMITS, LICENSES AND BONDS

All permits and licenses necessary for the work shall be secured and paid for by the Contractor. If any permit, license or certificate expires or is revoked, terminated, or suspended as a result of any action on the part of the Contractor, the Contractor shall not be entitled to additional compensation or time. The Contractor shall obtain and keep in force at all times performance and payment bonds payable to Fulton County in penal amounts equal to 100% of the Contract price.

00800-9 TAXES

A. The Contractor shall pay all sales, retail, occupational, service, excise, old age benefit and unemployment compensation taxes, consumer, use and other similar taxes, as well as any other taxes or duties on the materials, equipment, and labor for the work provided by the Contractor which are legally enacted by any

municipal, county, state or federal authority, department or agency at the time bids are received, whether or not yet effective. The Contractor shall maintain records pertaining to such taxes and levies as well as payment thereof and shall make the same available to the County at all reasonable times for inspection and copying. The Contractor shall apply for any and all tax exemptions which may be applicable and shall timely request from the County such documents and information as may be necessary to obtain such tax exemptions. The County shall have no liability to the Contractor for payment of any tax from which it is exempt.

B. The Contractor is obligated to comply with all local and State Sales and Use Tax laws. The Contractor shall provide the Owner with documentation to assist the Owner in obtaining sales and/or use tax refunds for eligible machinery and equipment used for the primary purpose of reducing or eliminating air or water pollution as provided for in Chapter 48-8-3 (36) and (37) of the Official Code of Georgia. All taxes shall be paid by the Contractor. All refunds will accrue to the Owner.

Acceptance of the project as complete and final payment will not be made by the Owner until the Contractor has fully complied with this requirement.

00800-10 DELINQUENT CONTRACTORS

The County shall not pay any claim, debt, demand or account whatsoever to any person firm or corporation who is in arrears to the County for taxes. The County shall be entitled to a counterclaim, backcharge, and offset for any such debt in the amount of taxes in arrears, and no assignment or transfer of such debt after the taxes become due shall affect the right of the County to offset any taxes owed against said debt.

00800-11 LIEN WAIVERS

The Contractor shall furnish the County with evidence that all persons who have performed work or furnished materials pursuant to this agreement have been paid in full prior to submitting its demand for final payment pursuant to this agreement. A final affidavit, Exhibit A, must be completed, and submitted to comply with requirements of 00800-11. In the event that such evidence is not furnished, the County may retain sufficient sums necessary to meet all lawful claims of such laborers and materialmen. The County assumes no obligation nor in any way undertakes to pay such lawful claims from any funds due or that may become due to the Contractor.

00800-12 MEASUREMENT

All items of work to be paid for per lump sum of measurement shall be subject to inspection, measurement, and confirmation by the Construction Manager.

00800-13 ASSIGNMENT

The Contractor shall not assign any portion of this agreement or moneys due there from (include factoring of receivables) without the prior written consent of the County. The Contractor shall retain personal control and shall provide personal attention to the fulfillment of its obligations pursuant to this agreement. Any assignment without the express written consent of the County shall render this contract voidable at the sole option of the County.

00800-14 FOREIGN CONTRACTORS

In the event that the Contractor is a foreign corporation, partnership, or sole proprietorship, the Contractor hereby irrevocably appoints the Secretary of State of Georgia as its agent for service of all legal process for the purpose of this contract only.

00800-15 INDEMNIFICATION

The Contractor hereby assumes the entire responsibility and liability for any and all injury to or death of any and all persons, including the Contractor's agents, servants, and employees, and in addition thereto, for any and all damages to property caused by or resulting from or arising out of any act or omission in connection with this contract or the prosecution of work hereunder, whether caused by the Contractor or the Contractor's agents, Servants, or employees, or by any of the Contractor's subcontractors or suppliers, and the Contractor shall indemnify and hold harmless the County, the Construction Manager, County's Commissioners, officers, employees, successors, assigns and agents, or any of their subcontractors from and against any and all loss and/or expense which they or any of them may suffer or pay as a result of claims or suits due to, because of, or arising out of any and all such injuries, deaths and/or damage, irrespective of County or Construction Manager negligence (except that no party shall be indemnified for their own sole negligence). The Contractor, if requested, shall assume and defend at the Contractor's own expense, any suit, action or other legal proceedings arising there from, and the Contractor hereby agrees to satisfy, pay, and cause to be discharged of record any judgment which may be rendered against the County and the Construction Manager arising there from.

In the event of any such loss, expense, damage, or injury, or if any claim or demand for damages as heretofore set forth is made against the County or the Construction Manager, the County may withhold from any payment due or thereafter to become due to the Contractor under the terms of this Contract, an amount sufficient in its judgment to protect and indemnify it and the Construction Manager, County's Commissioners, officers, employees, successors, assigns and agents from any and all claims, expense, loss, damages, or injury; and the County, in its discretion, may require the Contractor to furnish a surety bond satisfactory to the County providing for such protection and indemnity, which bond shall be furnished by the Contractor within five (5) days after written demand has been made therefore. The expense of said Bond shall be borne by the Contractor.

00800-16 SUPERVISION OF WORK AND COORDINATION WITH OTHERS

The Contractor shall supervise and direct the work using the Contractor's best skill and attention. The Contractor shall be solely responsible for all construction methods and procedures and shall coordinate all portions of the work pursuant to the contract subject to the overall coordination of the Construction Manager. All work pursuant to this agreement shall be performed in a skillful and workmanlike manner.

The County reserves the right to perform work related to the Project with the County's own forces and to award separate contracts in connection with other portions of the project, other work on the site under these or similar conditions of the contract, or work which has been extracted from the Contractor's work by the County.

When separate contracts are awarded for different portions of the project or other work on the site, the term "separate contractor" in the Contract Documents in each case shall mean the contractor who executes each separate County Agreement.

The Contractor shall cooperate with the County and separate contractors in arranging the introduction and storage of materials and equipment and execution of their work, and shall cooperate in coordinating connection of its work with theirs as required by the Contract Documents.

If any part of the Contractor's Work depends for proper execution or results upon the work of the County or any separate contractor, the Contractor shall, prior to proceeding with that portion of the Work, promptly report to the Construction Manager any apparent discrepancies or defects in such other work that render it unsuitable for such proper execution and results **within fourteen (14) days** of discovery of such discrepancy or defect. Failure of the Contractor to so report in writing shall constitute an acceptance of the County's or separate contractor's work as fit and proper to receive the Work, except as to any defects which may subsequently become apparent in such work by others.

Any costs caused by defective or untimely work shall be borne by the party responsible therefore.

Should the Contractor wrongfully cause damage to the work or property of the County or to other work or property on the site, including the work of separate contractors, the Contractor shall promptly remedy such damage at the Contractor's expense.

Should the Contractor be caused damage by any other contractor on the Project, by reason of such other contractor's failure to perform properly his contract with the County, no action shall lie against the County or the Construction Manager inasmuch as the parties to this agreement are the only beneficiaries hereof and there are no third party beneficiaries and neither the County nor the Construction Manager shall have liabilities therefore, but the Contractor may assert his claim for damages solely against such other contractor. The Contractor shall not be excused from performance of the contract by reason of any dispute as to damages with any other contractor or third party.

Where the Work of this Contract shall be performed concurrently in the same areas as other construction work, the Contractor shall coordinate with the Construction Manager and the separate contractors in establishing mutually acceptable schedules and procedures that shall permit all jobs to proceed with minimum interference.

If a dispute arises between the Contractor and separate contractors as to their responsibility for cleaning up, the County may clean up and charge the cost thereof to the Contractor or contractors responsible therefore as the County shall determine to be just.

00800-17 ADMINISTRATION OF CONTRACT

The Program Manager and the Construction Manager shall provide administration services as hereinafter described.

For the administration of this Contract, the Construction Manager shall serve as the County's primary representative during design and construction and until final payment to the Contractor is due. The Construction Manager shall advise and consult with the County and the Program Manager. The primary point of contact for the Contractor shall be the Construction Manager. All correspondence from the Contractor to the County shall be forwarded through the Construction Manager. Likewise, all correspondence and instructions to the Contractor shall be forwarded through the Construction Manager.

The Construction Manager will determine in general that the construction is being performed in accordance with design and engineering requirements, and will endeavor to guard the County against defects and deficiencies in the Work.

The Construction Manager will not be responsible for or have control or charge of construction means, methods, techniques, sequences, or procedures, or for safety precautions and programs in connection with the Work, nor will it be responsible for the Contractor's failure to carry out the Work in accordance with the Contract Documents. The Construction Manager will not be responsible for or have control or charge over the acts or omissions of the Contractor, its engineers, consultants, subcontractors, or any of their agents or employees, or any other persons performing the Work.

Based on the Construction Manager's observations regarding the Contractor's Applications for Payment, the Construction Manager shall determine the amounts owing to the Contractor, in accordance with the payment terms of the Contract, and shall issue Certificates for Payment in such amount to the County.

The Construction Manager shall render interpretations necessary for the proper execution or progress of the Work. Either party to the Contract may make written requests to the Construction Manager for such interpretations.

Claims, disputes and other matters in question between the Contractor and the County relating to the progress of the Work or the interpretation of the Contract Documents shall be referred to the Construction Manager for interpretation.

All interpretations of the Construction Manager shall be consistent with the intent of and reasonably inferable from the Contract Documents and shall be in writing or in graphic form.

Except as otherwise provided in this Contract, the Construction Manager shall issue a decision on any disagreement concerning a question of fact arising under this Contract. The Construction Manager shall reduce the decision to writing and mail or otherwise furnish a copy thereof to the Contractor. The decision of the Construction Manager shall be final and conclusive unless, within thirty (30) days from the date of receipt of such copy, the Contractor files a written appeal with the Director of Public Works and mails or otherwise furnishes the Construction Manager a copy of such appeal. The decision of the Director of Public Works or the Director's duly authorized representative for the determination of such appeals shall be final and conclusive. Such final decision shall not be pleaded in any suit involving a question of fact arising under this Contract, provided such is not fraudulent, capricious, arbitrary, so grossly erroneous as necessarily implying bad faith, or is not supported by substantial evidence. In connection with any appeal proceeding under this Article, the Contractor shall be afforded an opportunity to be heard and to offer evidence in support of Contractor's appeal. Pending any final decision of a dispute hereunder, the Contractor shall proceed diligently with the performance of the Contract as directed by the Construction Manager.

The Construction Manager shall have authority to reject Work which does not conform to the Contract Documents. Whenever, in the Construction Manager's opinion, it is considered necessary or advisable for the implementation of the intent of the Contract Documents, the County shall have authority to require special inspection or testing of the Work whether or not such Work be then fabricated, installed or completed. The Contractor shall pay for such special inspection or testing if the Work so inspected or tested is found not to comply with the requirements of the contract; the County shall pay for special inspection and testing if the Work is found to comply with the contract.

Neither the Construction Manager's authority to act under this Subparagraph, nor any decision made by the Construction Manager in good faith either to exercise or not to exercise such authority, shall give rise to any duty or responsibility of the Construction Manager to the Contractor, any subcontractor, any of their agents or employees, or any other person performing any of the Work.

The Contractor shall provide such shop drawings, product data, and samples as may be required by the Construction Manager and/or as required by these Contract Documents.

The Construction Manager shall conduct inspections to determine Substantial Completion and Final Completion, and shall receive and forward to the County for review written warranties and related documents required by the Contract Documents and assembled by the Contractor. The Construction Manager shall approve and issue Certificates for Payment upon compliance with Substantial and Final Completion requirements indicated in General Conditions 00800-81, 00800-82, 00800-84 and 00800-85 of this Agreement.

Except as provided in General Condition 00800-48, the Contractor shall not be relieved from the Contractor's obligations to perform the work in accordance with the contract documents by the activities or duties of the County or any of its officers, employees, or agents, including inspections, tests or approvals, required or performed pursuant to this agreement.

00800-18 RESPONSIBILITY FOR ACTS OF EMPLOYEES

The Contractor shall employ only competent and skilled personnel. The Contractor shall, upon demand from the Construction Manager, immediately remove any superintendent, foreman or workman whom the Construction Manager may consider incompetent or undesirable.

The Contractor shall be responsible to the County for the acts and omissions of the Contractor's employees, subcontractors, and agents as well as any other persons performing work pursuant to this agreement for the Contractor.

00800-19 LABOR, MATERIALS, SUPPLIES, AND EQUIPMENT

Unless otherwise provided in this agreement, the Contractor shall make all arrangements with necessary support agencies and utility companies provide and pay for all labor, materials, equipment, tools, construction equipment and machinery, water, heat, utilities, transportation, and other facilities and services necessary for the execution and completion of the work.

00800-20 DISCIPLINE ON WORK SITE

The Contractor shall enforce strict discipline and good order among its employees and subcontractors at all times during the performance of the work, to include compliance with the Fulton County Drug Free Work Place Policy. The Contractor shall not employ any subcontractor who is not skilled in the task assigned to it. The Construction Manager may, by written notice, require the Contractor to remove from the work any subcontractor or employee deemed by the Construction Manager to be incompetent.

00800-21 HOURS OF OPERATION

All work at the construction site shall be performed during regular business hours of the Fulton County government, except upon the Construction Manager's prior written consent to other work hours. It is further understood that the Contractor's construction schedule is based on a normal 40 hours, five day work week, less Fulton County-

recognized holidays. Contractors work schedule shall not violate Fulton County Noise Ordinance by working hours inconsistent with the Fulton County Noise Ordinance. The County's current noise ordinance or other applicable ordinance shall govern. If the Contractor desires to work in excess of this limit, the Contractor shall submit a written request to the Construction Manager, a minimum of five days prior to the desired work date. The Contractor shall be responsible for any additional expenses incurred by the Owner as a result of the extended work hours, including resident inspection overtime. The cost associated with resident inspector overtime shall be deducted from the Contractor monthly payment request.

00800-22 FAMILIARITY WITH WORK CONDITIONS

The Contractor shall take all steps necessary to ascertain the nature and location of the work and the general and local conditions which may affect the work or the cost thereof. The Contractor's failure to fully acquaint itself with the conditions which may affect the work, including, but not limited to conditions relating to transportation, handling, storage of materials, availability of utilities, labor, water, roads, weather, topographic and subsurface conditions, other separate contracts to be entered into by the County relating to the project which may affect the work of the Contractor, applicable provisions of law, and the character and availability of equipment and facilities necessary prior to and during the performance of the work shall not relieve the Contractor of its responsibilities pursuant to this agreement and shall not constitute a basis for an equitable adjustment of the contract terms. The County reserves the right to perform with its own forces or to contract with other entities for other portions of the project work, in which case the Contractor's responsibility to assure its familiarity with work conditions hereunder shall include all coordination with such other contractors and the County necessary to insure that there is no interference between contractors as will delay or hinder any contractor in its prosecution of work on the project. The County assumes no responsibility for any understandings or representations concerning conditions of the work made by any of its officers, agents, or employees prior to the execution of this agreement.

00800-23 RIGHT OF ENTRY

The County reserves the right to enter the site of the work by such agent, including the Construction Manager, as it may elect for the purpose of inspecting the work or installing such collateral work as the County may desire. The Contractor shall provide safe facilities for such access so that the County and its agents may perform their functions.

00800-24 NOTICES

Any notice, order, instruction, claim or other written communication required pursuant to this agreement shall be deemed to have been delivered or received as follows:

Upon personal delivery to the Contractor, its authorized representative, or the Construction Manager on behalf of the County. Personal delivery may be accomplished by in-person hand delivery or bona fide overnight express service.

Three days after depositing in the United States mail a certified letter addressed to the Contractor or the Construction Manager for the County. For purposes of mailed notices, the County's mailing address shall be 141 Pryor Street, 6th Floor, Atlanta, Georgia 30303, or as the County shall have otherwise notified the Contractor. The Contractor's mailing address shall be the address stated in its proposal or as it shall have most recently notified the Construction Manager in writing.

00800-25 SAFETY

A. SAFETY, HEALTH AND LOSS PREVENTION

The Contractor shall be responsible for implementing a comprehensive project-specific safety, health and loss prevention program and employee substance abuse program for this project. All Sub-Contractors must either implement their own program or follow the Contractor's safety, health and loss prevention program and employee substance abuse program.

The Contractor's safety, health and loss prevention program and employee substance abuse program must meet or exceed all governmental regulations (OSHA, EPA, DOT, State, local), and any other specific Fulton County requirements

B. COUNTY'S SAFETY, HEALTH, AND LOSS PREVENTION PROCESS GUIDELINES AND REQUIREMENTS

The County and its agents reserve the right, but assume no duty, to establish and enforce safety, health, and loss prevention guidelines and to make the appropriate changes in the guidelines, for the protection of persons and property and to review the efficiency of all protective measures taken by the Contractor. The Contractor shall comply with all safety, health, and loss prevention process guidelines and requirements and changes made by the County or its agent(s). The issuance of any such guidelines or changes by the County or its agent(s) shall not relieve the Contractor of its duties and responsibilities under this Agreement, and the County or its agent(s) shall not thereby assume, nor be deemed to have assumed, any such duties or responsibilities of the Contractor.

C. COMPLIANCE OF WORK, EQUIPMENT, AND PROCEDURES WITH ALL APPLICABLE LAWS and REGULATIONS

All Work, whether performed by the Contractor or its Sub-Contractors of any tier, or anyone directly or indirectly employed by any of them, and all equipment, appliances, machinery, materials, tools and like items incorporated or used in the Work, shall be in compliance with and conform to:

1. All applicable laws, ordinances, rules, regulations and orders of any public, quasi-public or other governmental authority relating to the safety of persons and their protection against injury, specifically including, but in no event limited to, the Federal Occupational Safety and Health Act of 1970, as amended, and all rules and regulations now or hereafter in effect pursuant to said Act.

2. All rules, regulations, and requirements of the County or its agent(s) and its insurance carriers relating there to. In the event of a conflict or differing requirements the more stringent shall govern.

D. PROTECTION OF THE WORK

1. The Contractor shall, throughout the performance of the Work, maintain adequate and continuous protection of all Work and temporary facilities against loss or damage from whatever cause, shall protect the property of the County and third parties from loss or damage from whatever cause arising out of the performance of the Work, and shall comply with the requirements of the County or its agent(s) and its insurance carriers, and with all applicable laws, codes, rules and regulations, (as same may be

amended) with respect to the prevention of loss or damage to property as a result of fire or other hazards.

2. The County or its agent(s) may, but shall not be required to, make periodic inspections of the Project work area. In such event, however, the Contractor shall not be relieved of its aforesaid responsibilities and the County or its agent(s) shall not assume, nor shall it be deemed to have assumed, any responsibility otherwise imposed upon the assurance of Contractor by this Agreement.

E. SAFETY EQUIPMENT

1. The Contractor shall provide to each worker on the Project work area the proper safety equipment for the duties being performed by that worker and will not permit any worker on the Project work area who fails or refuses to use the same. The County or its agent shall have the right, but not the obligation, to order the removal of a worker from the Project work site for his/her failure to comply with safe practices or substance abuse policies.

F. EMERGENCIES

1. In any emergency affecting the safety of persons or property, or in the event of a claimed violation of any federal or state safety or health law or regulation, arising out of or in any way connected with the Work or its performance, the Contractor shall act immediately to prevent threatened damage, injury or loss and to remedy said violation. Failing such action the County or its agent(s) may immediately take whatever steps it deems necessary including, but not limited to, suspending the Work as provided in this Agreement.

2. The County or its agent(s) may offset any and all costs or expenses of whatever nature, including attorneys' fees, paid or incurred by the County or its agent(s) (whether such fees are for in-house counsel or counsel retained by the County or its agent), in taking the steps authorized by Section 00800-25(G) (1) above against any sums then or thereafter due to the Contractor. The Contractor shall defend, indemnify and hold the County, its officers, agents, and employees harmless against any and all costs or expenses caused by or arising from the exercise by the County of its authority to act in an emergency as set out herein. If the Contractor shall be entitled to any additional compensation or extension of time change order on account of emergency work not due to the fault or neglect of the Contractor or its Sub-Contractors, such additional compensation or extension of time shall be determined in accordance with General Condition 00800-52 and General Condition 00800-87 of this Agreement.

G. SUSPENSION OF THE WORK

1. Should, in the judgment of the County or its agent(s), the Contractor or any Sub-Contractor fail to provide a safe and healthy work place, the County or its agent shall have the right, but not the obligation, to suspend work in the unsafe areas until deficiencies are corrected. All costs of any nature (including, without limitation, overtime pay, liquidated damages or

other costs arising out of delays) resulting from the suspension, by whomsoever incurred, shall be borne by the Contractor.

2. Should the Contractor or any Sub-Contractor fail to provide a safe and healthy work place after being formally notified in writing by the County or its agents of such non-compliance, the contract may be terminated following the termination provision of the contract.

H. CONTRACTOR'S INDEMNITY OF THE COUNTY FOR CONTRACTOR'S NON-COMPLIANCE WITH SAFETY PROGRAM

1. The Contractor recognizes that it has sole responsibility to assure its Safety Program is implemented and to assure its construction services are safely provided. The Contractor shall indemnify, defend and hold the County and its agents harmless, from and against any and all liability (whether public or private), penalties (contractual or otherwise), losses, damages, costs, attorneys' fees, expenses, causes of action, claims or judgments resulting, either in whole or in part, from any failure of the Contractor, its Sub-Contractors of any tier or anyone directly or indirectly employed by any of them or for whose acts any of them may be liable, to comply with the safety requirements of the contract. The Contractor shall not be relieved of its responsibilities under the safety requirements of the Contract should the County or its agent(s) act or fail to act pursuant to its rights hereunder.

2. The Contractor shall not raise as a defense to its obligation to indemnify under this Subparagraph I any failure of those indemnified hereunder to assure Contractor operates safely, it being understood and agreed that no such failure shall relieve the Contractor from its obligation to assure safe operations or from its obligation to so indemnify. The Contractor also hereby waives any rights it may have to seek contribution, either directly or indirectly, from those indemnified hereunder.

3. In any and all claims against those indemnified hereunder by any employee of the Contractor, any Sub-Contractor of any tier or anyone directly or indirectly employed by any of them or anyone for whose acts any of them may be liable, the indemnification obligation under this Subparagraph I shall not be limited in any way as to the amount or type of damages, compensation or benefits payable by or for the Contractor or any Sub-Contractor of any tier under any workers' compensation act, disability benefit or other employee benefit acts.

00800-26 BLASTING AND EXCAVATION

The Contractor acknowledges that it is fully aware of the contents and requirements of O.C.G.A. § 25-9-1 through 25-9-12 concerning blasting and excavation near underground gas pipes and facilities and shall fully comply therewith.

00800-27 HIGH VOLTAGE LINES

The Contractor acknowledges that it is fully aware of the contents and requirements O.C.G.A. § 46-3-30 through 46-3-39 concerning safeguards against contact with high voltage lines, and the Contractor shall fully comply with said provisions.

00800-28 SCAFFOLDING AND STAGING

The Contractor acknowledges that it is the person responsible for employing and directing others to perform labor within the meaning of O.C.G.A. § 34-1-1 and agrees to comply with said provisions.

00800-29 CLEAN-UP

The Contractor shall clean up all refuse, rubbish, scrap materials, and debris caused by its operations to the end that the site of the work shall present a neat, orderly and workmanlike appearance at all times.

00800-30 PROTECTION OF WORK

The Contractor shall be responsible for maintenance and protection of the work, which shall include any County-furnished supplies, material, equipment, until final completion of this agreement and acceptance of the work as defined herein. Any portion of the work suffering injury, damage or loss shall be considered defective and shall be corrected or replaced by the Contractor without additional cost to the County.

00800-31 REJECTED WORK

The Contractor shall promptly remove from the project all work rejected by the Construction Manager for failure to comply with the contract documents and the Contractor shall promptly replace and re-execute the work in accordance with the contract documents and without expense to the County. The Contractor shall also bear the expense of making good all work of other Contractors destroyed or damaged by such removal or replacement.

00800-32 DEFECTIVE WORK

If the Contractor defaults or neglects to carry out any portion of the work in accordance with the contract documents, and fails within three days after receipt of written notice from the Construction Manager to commence and continue correction of such default or neglect with diligence and promptness, the County may, after three days following receipt by the Contractor of an additional written notice and without prejudice to any other remedy the County may have, make good such deficiencies and complete all or any portion of any work through such means as the County may select, including the use of a separate Contractor. In such case, an appropriate change order shall be issued deducting from the payments then or thereafter due the Contractor the cost of correcting such deficiencies. In the event the payments then or thereafter due the Contractor are not sufficient to cover such amount, the Contractor shall pay the difference to the County on demand.

The County may, at its option, accept defective or nonconforming work instead of requiring its removal or correction. In such case, a change order shall be issued reducing the price due the contractor to the extent appropriate and equitable. Such contract price adjustment shall be effected whether or not final payment has been made.

00800-33 WARRANTY OF NEW MATERIALS

The Contractor warrants to the County that all materials and equipment furnished under this contract will be new unless otherwise specified, and the Contractor further warrants that all work will be of good quality, free from faults and defects, and in conformance with the contract documents. The warranty set forth in this paragraph shall survive final acceptance of the work.

00800-34 CONTRACTOR'S WARRANTY OF THE WORK

If within one year after the date of issuance of the certificate of final payment pursuant to General Condition 84, or within such longer period of time as may be prescribed by law or by the term of any applicable special warranty required by the contract documents, any of the work is found to be defective or not in accordance with the contract documents, the Contractor shall correct such work promptly after receipt of written notice from the Construction Manager to do so. This obligation shall survive both final payment for the work and termination of the contract.

00800-35 ASSIGNMENT OF MANUFACTURERS' WARRANTIES

Without limiting the responsibility or liability of the Contractor pursuant to this agreement, all warranties given by manufacturers on materials or equipment incorporated in the work are hereby assigned by the Contractor to the County. If requested, the Contractor shall execute formal assignments of said manufacturer's warranties to the County. All such warranties shall be directly enforceable by the County.

00800-36 WARRANTIES IMPLIED BY LAW

The warranties contained in this agreement, as well as those warranties implied by law, shall be deemed cumulative and shall not be deemed alternative or exclusive. No one or more of the warranties contained herein shall be deemed to alter or limit any other.

00800-37 STOP WORK ORDERS

In the event that the Contractor fails to correct defective work as required by the contract documents or fails to carry out the work in accordance with contract documents, the Construction Manager, in writing, may order the Contractor to stop work until the cause for such order has been eliminated. This right of the County to stop work shall not give rise to any duty on the part of the County or the Construction Manager to execute this right for the benefit of the Contractor or for any other person or entity.

00800-38 TERMINATION FOR CAUSE

If the Contractor is adjudged bankrupt, makes a general assignment for the benefit of creditors, suffers the appointment of a receiver on account of its insolvency, fails to supply sufficient properly skilled workers or materials, fails to make prompt payment to subcontractors or materialmen, disregards laws, ordinances, rules, regulations, or orders of any public authority having jurisdiction, fails to diligently prosecute the work, or is otherwise guilty of a material violation of this agreement and fails within seven days after receipt of written notice to commence and continue correction of such default, neglect, or violation with diligence and promptness, the County may, after seven days following receipt by the Contractor of an additional written notice and without prejudice to any other remedy the County may have, terminate the employment of the Contractor and take possession of the site as well as all materials, equipment, tools, construction equipment and machinery thereon. The County may finish the work by whatever methods the County deems expedient. In such case, the Contractor shall not be entitled to receive any further payment until the work is completed. If the unpaid balance of the contract price exceeds the cost of completing the work, such excess shall be paid to the Contractor. If such costs exceed the unpaid balance, the Contractor shall pay the difference to the County on demand. This obligation for payment shall survive the termination of the contract. Termination of this agreement pursuant to this paragraph may result in disqualification of the Contractor from bidding on future County contracts.

00800-39 TERMINATION FOR CONVENIENCE

The County may, at any time upon written notice to the Contractor, terminate the whole or any portion of the work for the convenience of the County. The effective date of the terminations shall be provided in the written notice. Said termination shall be without prejudice to any right or remedy of the County provided herein. In addition, in the event this agreement has been terminated due to the default of the Contractor, and if it is later determined that the Contractor was not in default pursuant to the provisions of this agreement at the time of termination, then such termination shall be considered a termination for convenience pursuant to this paragraph.

00800-40 TERMINATION FOR CONVENIENCE - PAYMENT

If the Contract is terminated for convenience by the Owner as provided in this article, Contractor will be paid compensation for those services actually performed as approved by the Owner or his representative. Partially completed tasks will be compensated for based on a signed statement of completion prepared by the Project Manager and submitted to the Contractor which shall itemize each task element and briefly state what work has been completed and what work remains to be done. Contractor shall also be paid for reasonable costs for the orderly filing and closing of the project.

00800-41 TERMINATION FOR CONVENIENCE - PAYMENT LIMITATIONS

Except for normal spoilage, and except to the extent that the County shall have otherwise expressly assumed the risk of loss, there shall be excluded from the amounts payable to the Contractor the fair value, as determined by the Construction Manager, of property which is destroyed, lost, stolen or damaged so as to become undeliverable to the County or to another buyer.

00800-42 COST TO CURE

If the County terminates for cause the whole or any part of the work pursuant to this agreement, then the County may procure upon such terms and in such manner as the Construction Manager may deem appropriate, supplies or services similar to those so terminated, and the Contractor shall be liable to the County for any excess costs for such similar supplies or services. The Contractor shall continue the performance of this agreement to the extent not terminated hereunder.

00800-43 ATTORNEY'S FEES

Should the Contractor default pursuant to any of the provisions of this agreement, the Contractor and its surety shall pay to the County such reasonable attorney's fees as the County may expend as a result thereof and all costs, expenses, and filing fees incidental thereto.

00800-44 CONTRACTOR'S RESPONSIBILITIES UPON TERMINATION

After receipt of a notice of termination from the County, and except as otherwise directed by the Construction Manager, the Contractor shall:

1. Stop work under the contract on the date and to the extent specified in the notice of termination;
2. Place no further orders or subcontracts for materials, services or facilities, except as may be necessary for completion of such portion of the work under the agreement as is not terminated;

3. Terminate all orders and subcontracts to the extent that they relate to the performance of work terminated by the notice of termination;

4. Assign to the County in the manner, at the times, and to the extent directed by the Construction Manager, all of the rights, title and interest of the Contractor under the orders and subcontracts so terminated, in which case the County shall have the right, at its discretion, to settle or pay any and all claims arising out of the termination of such orders or subcontracts;

5. Settle all outstanding liabilities and all claims arising out of such termination of orders and subcontracts with the approval or ratification of the Construction Manager, to the extent the Construction Manager may require, which approval or ratification shall be final for all purposes;

6. Transfer title and deliver to the entity or entities designated by the Construction Manager, in the manner, at the times, and to the extent, if any, directed by the Construction Manager, and to the extent specifically produced or specifically acquired by the Contractor for the performance of such portion of the work as has been terminated:

    a. The fabricated or un-fabricated parts, work, and progress, partially completed supplies, and equipment, materials, parts, tools, dyes, jigs, and other fixtures, completed work, supplies, and other material produced as a part of or acquired in connection with the performance of the work terminated by the notice of termination; and

    b. The completed or partially completed plans, drawings, information, and other property to the work.

7. Use its best efforts to sell in the manner, at the times, to the extent, and at the prices directed or authorized by the Construction Manager, any property described in Section 6 of this paragraph, provided, however, that the Contractor shall not be required to extend credit to any buyer and further provided that the proceeds of any such transfer or disposition shall be applied in reduction of any payments to be made by the County to the Contractor pursuant to this agreement.

8. Complete performance of such part of the work as shall not have been terminated by the notice of termination; and

9. Take such action as may be necessary, or as the Construction Manager may direct, for the protection and preservation of the property related to the agreement which is in the possession of the Contractor and in which the County has or may acquire an interest.

00800-45 RECORDS

The Contractor shall preserve and make available to the County all of its records, books, documents and other evidence bearing on the costs and expenses of the Contractor and any subcontractor pursuant to this agreement upon three days advance notice to the Contractor.

00800-46 DEDUCTIONS

In arriving at any amount due the Contractor pursuant to the terms of this agreement, there shall be deducted all liquidated damages, advance payments made to the Contractor applicable to the termination portion of the contract, the amount of any claim which the County may have against the Contractor, the amount determined

By the Construction Manager to be necessary to protect the County against loss due to outstanding potential liens or claims, and the agreed price of any materials acquired or sold by the Contractor and not otherwise recovered by or credited to the County.

00800-47 REIMBURSEMENT OF THE COUNTY

In the event of termination, the Contractor shall refund to the County any amount paid by the County to the Contractor in excess of the costs properly reimbursable to the Contractor.

00800-48 SUSPENSION, INTERRUPTION, DELAY, DAMAGES

The Contractor shall be entitled to only those damages and that relief from termination by the County as specifically set forth in this agreement. The Construction Manager may issue a written order requiring the Contractor to suspend, delay or interrupt all or any part of the work for such period of time as the County may determine to be appropriate for the convenience of the County. If the performance of the work is interrupted for an unreasonable period of time by an act of the County or any of its officers, agents, employees, contractors, or consultants in the administration of this agreement, an equitable adjustment shall be made for any increase in the Contractor's costs of performance and any increase in the time required for performance of the work necessarily caused by the unreasonable suspension, delay, or interruption. Any equitable adjustment shall be reduced to writing and shall constitute a modification to this agreement. In no event, however, shall an equitable adjustment be made to the extent that performance of this agreement would have been suspended, delayed or interrupted by any other cause, including the fault or negligence of the Contractor. No claim for an equitable adjustment pursuant to this paragraph shall be permitted before the Contractor shall have notified the Construction Manager in writing of the act or failure to act involved, and no claim shall be allowed unless asserted in writing to the Construction Manager within ten days after the termination of such suspension, delay or interruption.

00800-49 COMMENCEMENT AND DURATION OF WORK

The County may issue a Notice to Proceed at any time within 120 days following execution of the contract by the County. The Contractor shall commence work pursuant to this agreement within ten days of mailing or delivery of written notice to proceed. The Contractor shall diligently prosecute the work to completion within the time specified therefore in the Agreement. The capacity of the Contractor's construction and manufacturing equipment and plan, sequence and method of operation and forces employed, including management and supervisory personnel, shall be such as to insure completion of the work within the time specified in the Agreement. The Contractor and County hereby agree that the contract time for completion of the work is reasonable taking into consideration the average climatic conditions prevailing in the locality of the work and anticipated work schedules of other contractors whose activities are in conjunction with or may affect the work under this contract.

00800-50 TIME OF THE ESSENCE

All time limits stated in this agreement are of the essence of this contract.

00800-51 IMPACT DAMAGES

Except as specifically provided pursuant to a stop work order or change order, the Contractor shall not be entitled to payment or compensation of any kind from the County for direct or indirect or impact damages including, but not limited to, costs of acceleration arising because of delay, disruption, interference or hindrance from any cause whatsoever whether such delay, disruption, interference or hindrance is reasonable or unreasonable, foreseeable or unforeseeable, or avoidable, provided, however, that this provision shall not preclude the recovery of damages by the Contractor for hindrances or delays due solely to fraud or bad faith on the part of the County, its agents, or employees. The Contractor shall be entitled only to extensions in the time required for performance of the work as specifically provided in the contract.

00800-52 DELAY

The Contractor may be entitled to an extension of the contract time, but not an increase in the contract price or damages, for delays arising from unforeseeable causes beyond the control and without the fault or negligence of the Contractor or its subcontractors for labor strikes, acts of God, acts of the public enemy, acts of the state, federal or local government in its sovereign capacity, by acts of another separate contractor, or by an act or neglect of the County.

00800-53 INCLEMENT WEATHER

The Contractor shall not be entitled to an extension of the contract time due to normal inclement weather. Unless the Contractor can substantiate to the satisfaction of the Construction Manager that there was greater than normal inclement weather and that such greater than normal inclement weather actually delayed the work, the Contractor shall not be entitled to an extension of time therefore. The following shall be considered the normal inclement weather days for each month listed, and extensions of time shall be granted in increments of not less than one half day only for inclement weather in excess of the days set out.

January	10 days
February	10 days
March	7 days
April	6 days
May	4 days
June	3 days
July	4 days
August	2 days
September	2 days
October	3 days
November	6 days
December	9 days

00800-54 DELAY - NOTICE AND CLAIM

The Contractor shall not receive an extension of time unless a Notice of Delay is filed with the Construction Manager within ten days of the first instance of such delay, disruption, interference or hindrance and a written Statement of the Claim is filed with the Construction Manager within 20 days of the first such instance. In the event that the Contractor fails to comply with this provision, it waives any claim which it may have for an extension of time pursuant to this agreement.

00800-55 STATEMENT OF CLAIM - CONTENTS

The Statement of Claim referenced in Article 00800-54 shall include specific information concerning the nature of the delay, the date of commencement of the delay, the construction activities affected by the delay, the person or organization responsible for the delay, the anticipated extent of the delay, and any recommended action to avoid or minimize the delay.

00800-56 WORK BEHIND SCHEDULE, REMEDY BY CONTRACTOR

If the work actually in place falls behind the currently updated and approved schedule, and it becomes apparent from the current schedule that work will not be completed within the contract time, the Contractor agrees that it will, as necessary, or as directed by the Construction Manager, take action at no additional cost to the County to improve the progress of the work, including increasing manpower, increasing the number of working hours per shift or shifts per working day, increasing the amount of equipment at the site, and any other measure reasonably required to complete the work in a timely fashion.

00800-57 DILIGENCE

The Contractor's failure to substantially comply with the requirements of the preceding paragraph may be grounds for determination by the County that the Contractor is failing to prosecute the work with such diligence as will insure its completion within the time specified. In such event, the County shall have the right to furnish, from its own forces or by contract, such additional labor and materials as may be required to comply with the schedule after 48 hours written notice to the Contractor, and the Contractor shall be liable for such costs incurred by the County.

00800-58 SET-OFFS

Any monies due to the Contractor pursuant to the preceding paragraph of this agreement may be deducted by the County against monies due from the County to the Contractor.

00800-59 REMEDIES CUMULATIVE

The remedies of the County under Articles 00800-56, 00800-57, and 00800-58 are in addition to and without prejudice to all of the rights and remedies of the County at law, in equity, or contained in this agreement.

00800-60 TITLE TO MATERIALS

No materials or supplies shall be purchased by the Contractor or by any Subcontractor subject to any chattel mortgage or under a conditional sales contract or other agreement by which any interest is retained by the seller. The Contractor hereby warrants that it has good and marketable title to all materials and supplies used by it in the work, and

the Contractor further warrants that all materials and supplies shall be free from all liens, claims, or encumbrances at the time of incorporation in the work.

00800-61 INSPECTION OF MATERIALS

All materials and equipment used in the construction of the project shall be subject to adequate inspection and testing in accordance with accepted standards and in accordance with the requirements of the contract documents. Additional tests performed after the rejection of materials or equipment shall be at the Contractor's expense.

00800-62 CONSTRUCTION MANAGER'S PRESENCE DURING TESTING

All tests performed by the Contractor shall be witnessed by the Construction Manager unless the requirement therefore is waived in writing. The Construction Manager may perform additional tests on materials previously tested by the Contractor, and the Contractor shall furnish samples for this purpose as requested.

00800-63 MATERIALS INCORPORATED IN WORK

The Contractor shall furnish all materials and equipment to be incorporated in the work. All such materials or equipment shall be new and of the highest quality available. Manufactured materials and equipment shall be obtained from sources which are currently manufacturing such materials, except as otherwise specifically approved by the Construction Manager.

00800-64 STORAGE OF MATERIALS

Materials and equipment to be incorporated in the work shall be stored in such a manner as to preserve their quality and fitness for the work and to facilitate inspection.

00800-65 PAYROLL REPORTS

The Contractor may be required to furnish payroll reports to the Construction Manager as required by the Owner Controlled Insurance Program.

00800-66 CONTRACTORS' REPRESENTATIVE

Before beginning work, the Contractor shall notify the Construction Manager in writing of one person within its organization who shall have complete authority to supervise the work, receive orders from the Construction Manager, and represent the Contractor in all matters arising pursuant to this agreement. The Contractor shall not remove its representative without first designating in writing a new representative. The Contractor's representative shall normally be present at or about the site of work while the work is in progress. When neither the Contractor nor its representative is present at the work site, the superintendent, foreman, or other of the Contractor' employee in charge of the work shall be an authorized representative of the Contractor.

00800-67 SPECIALTY SUB-CONTRACTORS

The Contractor may utilize the services of specialty subcontractors on those parts of the project which, under normal contracting practices, are performed by specialty subcontractors. The Contractor shall not award more than seventy-five percent of the work to subcontractors.

00800-68 INSPECTION BY THE CONSTRUCTION MANAGER

All work pursuant to this agreement shall be subject to inspection by the Construction Manager for conformity with contract drawings and specifications. The Contractor shall

give the Construction Manager reasonable advance notice of operations requiring special inspection of a portion of the work.

00800-69 WORK COVERED PRIOR TO CONSTRUCTION MANAGER'S INSPECTION

In the event that work is covered or completed without the approval of the Construction Manager, and such approval is required by the specifications or required in advance by the Construction Manager, the Contractor shall bear all costs involved in inspection notwithstanding conformance of such portion of the work to the contract drawings and specifications.

00800-70 SCHEDULING OF THE WORK

The work of this contract shall be planned, scheduled, executed, and reported as required by the Contract Documents.

00800-71 PROGRESS ESTIMATES

The Contractor shall prepare a written report for the Construction Manager's approval, on County forms, of the total value of work performed and materials and equipment obtained to the date of submission. Such a report must accompany each request for a progress payment and is subject to review and approval by the Construction Manager. Approval of a progress estimate or tendering of a progress payment shall not be considered an approval or acceptance of any work performed, and all estimates and payments shall be subject to correction in subsequent estimates. Progress payments shall be made for all completed activities and for materials suitably stored on-site.

00800-72 PROGRESS PAYMENTS

Upon approval of each monthly estimate of work performed and materials furnished, the Construction Manager shall approve payment to the Contractor for the estimated value of such work, materials, and equipment, less the amount of all prior payments and any liquidated damages. The Contractor will be paid 100 percent, less retainage, of the cost of materials received and properly stored on-site but not incorporated into the work. Payments for materials or equipment stored on the site shall be conditioned upon submission by the Contractor of bills of sale to establish the County's title to such materials or equipment. The Contractor's request for payment shall provide sufficient detail as to the work completed or materials purchased for which payment is requested to permit meaningful review by the Construction Manager.

00800-73 TIME OF PAYMENT

The Contractor will be paid within 45 days following receipt of an approved Progress Estimate. The Contractor expressly agrees that the payment provisions within this Contract shall supersede the rates of interest, payment periods, and contract and subcontract terms provided for under the Georgia Prompt Pay Act, O.C.G.A. §13-11-1 et seq., and that the rates of interest, payment periods, and contract and subcontract terms provided for under the Prompt Pay Act shall have no application to this Contract. The County shall not be liable for any late payment interest or penalty.

Submittal of Invoices: Invoices shall be submitted as follows:

Via Mail:
Fulton County Government
141 Pryor Street, SW
Suite 7001
Atlanta, Georgia 30303

Attn: Finance Department – Accounts Payable

OR

Via Email:
Email: Accounts.Payable@fultoncountyga.gov

At minimum, original invoices must reference all of the following information:

1) Vendor Information
    a. Vendor Name
    b. Vendor Address
    c. Vendor Code
    d. Vendor Contact Information
    e. Remittance Address

2) Invoice Details
    a. Invoice Date
    b. Invoice Number (uniquely numbered, no duplicates)
    c. Purchase Order Reference Number
    d. Date(s) of Services Performed
    e. A written report of the total value of work performed and materials and equipment obtained to the date of submission

3) Fulton County Department Information (needed for invoice approval)
    a. Department Name
    b. Department Representative Name

00800-74 RETAINAGE

The County shall retain from each progress payment ten percent of the estimated value of the work performed until the progress payments, including retainage, total 50 percent of the contract price. If a contract includes two or more projects or assignments that have been separately priced and have separate budgets, and the performances of such projects or assignments are not related to or dependent upon the performance of any other, the 50 per cent limit shall be based upon the price for each individual project or assignment. Thereafter, no further retainage shall be withheld so long as the Contractor is making satisfactory progress to insure completion of the work within the time specified therefore. The County may reinstate the ten percent retainage in the event the Construction Manager determines that the Contractor is not making satisfactory progress to complete the work within the time specified in this agreement or in the event that the Construction Manager provides a specific cause for such withholding. The County may also withhold retainage upon substantial completion of the work as provided in O.C.G.A. §13-10-81(c). Interest may be paid upon the retainage in accordance with Georgia law.

00800-75 PAYMENT OF SUBCONTRACTORS

The Contractor shall promptly pay each subcontractor upon the receipt of payment from the County. Such payment shall be made from the amount paid to the Contractor pursuant to the subcontractor's work. The Contractor shall also maintain the records of the percentage retained from payments to the Contractor pursuant to such subcontractor's work. The Contractor shall procure agreements from each subcontractor

requiring each subcontractor to pay their subcontractors, agents and employees in a similar manner. The County reserves the right to inquire of any subcontractor, supplier, materialmen, or subconsultant, the status of any indebtedness of the Contractor. The County further reserves the right to require the Contractor to designate on each instrument of payment exceeding $400.00 to subcontractors, suppliers, materialmen, and subconsultants that such payment is on account of the work under this Contract.

00800-76 COUNTY'S RESPONSIBILITIES TO SUBCONTRACTORS

Neither the County nor the Construction Manager shall have any obligation to pay any subcontractor except as otherwise required by law.

00800-77 PROGRESS PAYMENTS - ACCEPTANCE OF WORK

Certification of progress payments, as well as the actual payment thereof, shall not constitute the County's acceptance of work performed pursuant to this agreement.

00800-78 PAYMENTS IN TRUST

All sums paid to the Contractor pursuant to this agreement are hereby declared to constitute trust funds in the hands of the contractor to be applied first to the payment of claims of subcontractors, laborers, and suppliers arising out of the work, to claims for utilities furnished and taxes imposed, and to the payment of premiums on surety and other bonds and on insurance for any other application.

00800-79 JOINT PAYMENTS

The County reserves the right to issue any progress payment or final payment by check jointly to the Contractor and any subcontractor or supplier.

00800-80 RIGHT TO WITHHOLD PAYMENT

The Construction Manager may decline to approve payment and may withhold payment in whole or in part to the extent reasonable and necessary to protect the County against loss due to defective work, probable or actual third party claims, the Contractor's failure to pay subcontractors or materialmen, reasonable evidence that the work will not be completed within the contract time or contract price or damage to the County or any other contractor on the project.

00800-81 CERTIFICATE OF SUBSTANTIAL COMPLETION

Upon the Contractor's submission of a request for a certificate of Substantial Completion, the Construction Manager shall inspect the work and determine whether the work is Substantially Complete. If the work is Substantially Complete, the Construction Manager shall issue a certificate of Substantial Completion of the work which shall establish the date of Substantial Completion, shall state the responsibilities of the County and the Contractor for security, maintenance, heat, utilities, damage to the work and insurance, and shall fix the time within which the Contractor shall complete the items submitted by the Contractor as requiring correction or further work. The certificate of substantial completion of the work shall be submitted to the County and the Contractor for their written acceptance of the responsibilities assigned to them pursuant to such certificate.

If in the sole opinion of the Construction Manager, the work is not substantially complete, the Construction Manager shall notify the Contractor of such, in writing, and outline requirements to be met to achieve Substantial Completion.

00800-82 PAYMENT UPON SUBSTANTIAL COMPLETION

Upon Substantial Completion of the work and upon application by the Contractor and approval by the Construction Manager, the County shall make payment reflecting 100% work completed, less value of work remaining as determined by Construction Manager and any authorized retainage.

00800-83 COMMENCEMENT OF WARRANTIES

Warranties required by this agreement shall commence on the date of final completion of the project as determined under Article 00800-84 unless otherwise provided in the certificate of Substantial Completion.

00800-84 FINAL PAYMENT - WAIVER OF CLAIMS, DISPUTE OF FINAL PAYMENT

The acceptance of the Substantial Completion payment shall constitute a waiver of all claims by the Contractor except those previously made in writing and identified by the Contractor as unsettled at the time of application for payment at Substantial Completion and except for the retainage sums due at final acceptance. Following the Construction Manager's issuance of the certificate of Substantial Completion and the Contractor's completion of the work pursuant to this agreement, the Contractor shall forward to the Construction Manager a written notice that the work is ready for final inspection and acceptance. If after inspection the Construction Manager certifies that the work is complete and issues written notification of such to the Contractor, the Contractor shall forward to the Construction Manager a final application for payment. The Construction Manager shall issue a certificate for payment, which shall approve final payment to the Contractor and shall establish the date of final completion.

In the event the Contractor timely disputes the amount of the final payment, the amount due the Contractor shall be deemed by the Contractor and the County to be an unliquidated sum and no interest shall accrue or be payable on the sum finally determined to be due to the Contractor for any period prior to final determination of such sum, whether such determination be by agreement of the Contractor and the County or by final judgment of the proper court in the event of litigation between the County and the Contractor. The Contractor specifically waives and renounces any and all rights it may have under O.C.G.A. §13-6-13 and agrees that in the event suit is brought by the Contractor against the County for any sum claimed by the Contractor under the Contract or for any extra or additional work, no interest shall be awarded on any sum found to be due from the County to the Contractor in the final judgment entered in such suit. All final judgments shall draw interest at the legal rate, as specified by law.

00800-85 DOCUMENTATION OF COMPLETION OF WORK

Neither the final payment nor the remaining retainage shall become due until the Contractor submits the following documents to the Construction Manager:

a. An affidavit that all payrolls, bills for materials and equipment, and other indebtedness connected with the work have been paid other otherwise satisfied;

b. The surety's consent to final payment; and

c. Any other data reasonably required by the County or Construction Manager establishing payment or satisfaction of all such obligations, including releases, waivers of liens, and documents of satisfaction of debts.

In the event that a subcontractor refuses to furnish a release or waiver as required by the County or Construction Manager, the Contractor may furnish a bond satisfactory to the County to indemnify the County against such loss. In the event that any lien or indebtedness remains unsatisfied after all payments are made, the contractor shall refund to the County all moneys that the County may become compelled to pay in discharging such lien or other indebtedness, including all costs and reasonable attorney's fees.

00800-86 GOVERNING LAW

Each and every provision of this agreement shall be construed in accordance with and governed by Georgia law. The parties acknowledge that this contract is executed in Fulton County, Georgia and that the contract is to be performed in Fulton County, Georgia. Each party hereby consents to the Fulton Superior Court's sole jurisdiction over any dispute which arises as a result of the execution or performance of this agreement, and each party hereby waives any and all objections to venue in the Fulton Superior Court.

00800-87 CHANGES IN THE WORK

A. CHANGE ORDERS

1. A Change Order is a written order to the Contractor signed to show the approval and the authorization of the County, issued after execution of the Contract, authorizing a change in the Work and/or an adjustment in the Contract Sum or the Contract Time. Change Orders shall be written using forms designated by the County with Contractor providing supporting documentation as required by the Construction Manager. The Contract Sum and the Contract Time may be changed only by approved Change Order pursuant to Fulton County Procedure 800-6. The amount payable by the Change Order is payment in full for all direct and indirect costs incurred and related to the work under said Change Order, including but not limited to delays, imports, acceleration, disruption and extended overhead. A Change Order signed by the Contractor indicates the Contractor's agreement therewith, including the adjustment in either or both of the Contract Sum or the Contract Time.

2. The County, without invalidating the Contract, may order changes in the Work within the general scope of the Contract as defined herein. The time allowed for performance of the work and the contract price to be paid to the Contractor may be adjusted accordingly.

3. The cost or credit to the County resulting from a change in the Work shall be determined in one or more of the following ways:

    a. By mutual acceptance of a lump sum properly itemized and supported by sufficient substantiating data to permit evaluation;

    b. By unit prices stated in the Contract Documents or subsequently agreed upon;

    c. By cost to be determined in a manner agreed upon by the parties and a mutually acceptable fixed or percentage fee; or

    d. By the method provided in Subparagraph A4 below.

4. If none of the methods set forth in Subparagraphs 3a, 3b, or 3c above is agreed upon, the Contractor, provided a written order signed by the Construction Manager is received, shall promptly proceed with the Work involved. The cost of such Work shall then be determined by the Construction Manager on basis of the reasonable expenditures and savings of those performing the Work attributable to the change. The cost of the change shall include only the items listed in Subparagraph 5a below, and in the case of either a decrease or an increase in the Contract Sum, an allowance for overhead and profit in accordance with the schedules set forth in Subparagraphs 5b and 6 below shall be applied to the cost or credit.

   a. In such case, and also under Subparagraph 3a above, the Contractor shall keep and present, in such form as the Construction Manager may prescribe, an itemized accounting of all actual costs expended, together with appropriate supporting data for inclusion in a Change Order.

   b. All hourly rate charges shall be submitted to the Construction Manager for prior review and approval. All hourly rate charges shall be properly supported as required by the Construction Manager with certified payrolls, or their acceptable equivalent. When authorized to proceed for a given change and actual expenditures have been made prior to execution of a Change Order for the entire change, such actual expenditures may be summarized monthly, and if approved, incorporated into a Change Order. When both additions and credits covering related Work or substitutions are involved in any one change, the allowance for overhead and profit shall be figured on the basis of the net increase or decrease, if any, with respect to that change.

5. In Subparagraphs 3 and 4 above, the items included in "Cost and "Overhead" shall be based on the following schedule:

   a. Unless otherwise provided in the Contract Documents, "Cost" shall be limited to the following: cost of materials incorporated into the Work, including sales tax and cost of delivery; cost of direct labor (labor cost may include a pro rata share of foreman's account of the change) including social security, old age and unemployment insurance, and fringe benefits required by agreement or custom; workers' or workmen's compensation insurance; rental value of equipment and machinery; costs for preparing Shop Drawings.

   b. Unless otherwise provided in the Contract Documents, "Overhead" shall include the following: bond and insurance premiums including increase and decreases from change in the Work, supervision, superintendence, construction parking, wages of timekeepers, watchmen and clerks, small tools, consumable supplies, expendables, incidentals, general office expense, the cost of additional reproduction for the Contractor's subcontractors beyond that agreed upon in the Contract Documents, construction parking, any additional costs of craft supervision by the

Contractor's or subcontractors' superintendents, and overhead charges which would be customary and expended regardless of the change in the Work due to other overlapping activities which are included as part of the original Contract, and all other expenses not included in "Cost" above.

c. In the event that a change is issued by the County which would require the expenditure of substantial amounts of special supervision (beyond the foreman level) by the Contractor, the Contractor may, at the sole direction of the Construction Manager, be allowed to incorporate these charges into the agreement cost for the change.

6. In Subparagraphs 3 and 4 above, the allowance for overhead and profit combined, included in the total cost or credit to the County, shall be based on the following schedule:

   a. For the Contractor, for any work performed by the Contractor's own forces, ten (10) percent of the cost.

   b. For the Contractor, for any work performed by a Contractor's subcontractor, five (5) percent of the amount due the subcontractor.

   c. For each subcontractor or sub-subcontractor involved, for any work performed by that subcontractor's or sub-subcontractor's own forces, ten (10) percent of the cost.

   d. For each subcontractor, for work performed by a sub-subcontractor, five (5) percent of the amount due to the sub-subcontractor.

   e. Cost to which overhead and profit is to be applied shall be determined in accordance with Subparagraph 5 above unless modified otherwise.

7. In order to facilitate checking of quotations for extras or credits, all proposals or bids, except those so minor that their propriety can be seen by inspection, shall be accompanied by a complete itemization of costs, including labor cost, materials and subcontracts. Labor and materials shall be itemized in the manner defined in Subparagraph 4 above. Where major cost items are subcontracts, they shall be itemized also. In no case shall a change be approved without such itemization.

8. No payment shall be made for any changes to the contract that are not included in a fully executed Change Order.

B. CONCEALED, UNKNOWN AND DIFFERING CONDITIONS

1. Should concealed conditions be encountered in the performance of the Work below the surface of the ground, or should concealed or unknown conditions in an existing structure be at variance with the conditions indicated by the Contract Documents, or should unknown physical conditions below the surface of the ground or concealed or unknown conditions in an existing structure of an unusual nature, differing materially from those ordinarily encountered and generally recognized as inherent in work of the character provided for in this Contract, be

encountered, the Contract Sum and Contract Time shall be equitably adjusted by Change Order upon request by either party made **within twenty (20) days after the first observance** of the conditions. No such request for equitable adjustment shall be valid unless the Contractor complies with this (20) days' notice and Subparagraph C.1. below.

2. The Contractor shall promptly, and before such conditions are disturbed, notify the Construction Manager in writing of any claim of concealed, unknown or differing conditions pursuant to this paragraph. The Construction Manager shall authorize the Engineer to investigate the conditions, and if it is found that such conditions do materially so differ and cause an increase or decrease in the Contractor's cost of, or the time required for, performance of any part of the Work under this Contract, whether or not changed as a result of such conditions, an equitable adjustment shall be recommended to the Construction Manager.

3. No claim of the Contractor under this clause shall be allowed unless the Contractor has given the notice required in (a) above, prior to disturbing the condition.

4. No claim by the Contractor for an equitable adjustment shall be allowed if asserted after final payment under this Contract.

5. Any materially differing site condition as between what is shown on the Drawings and Specifications and actually found on site shall be immediately reported to the Construction Manager in writing prior to the commencement of Work at the site. Failure of the Contractor to notify the Construction Manager in writing of the differing site condition prior to performance of Work at the site shall constitute a waiver of any claim for additional monies. Any Change Order necessitated by the differing site condition shall be processed as provided under "Changes in the Contract".

C. REQUESTS FOR ADDITIONAL COST

1. If the Contractor wishes to request an increase in the Contract Sum, the Contractor shall give the Construction Manager written notice thereof within twenty (20) days after the occurrence of the event, or identification of the conditions, giving rise to such request. This notice shall be given by the Contractor before proceeding to execute the Work, except in an emergency endangering life or property in which case the Contractor shall proceed in accordance with Article 00800-25 and Subparagraph A.4 above. No such request shall be valid unless so made within the twenty (20) days specified above. If the County and the Contractor cannot agree on the amount of the adjustment in the Contract Sum, it shall be determined by the Construction Manager. Any change in the Contract Sum resulting from such claim shall be documented by Change Order.

2. If the Contractor claims that addition cost is involved because of, but not limited to (1) any written interpretation pursuant to General Condition 00800-17 of this Agreement, (2) any order by the County to stop the Work pursuant to Articles 00800-25 and 00800-37 of this Agreement where the Contractor was not at fault, or any such order by the Construction Manager as the County's agent, or (3) any written order for a minor

change in the Work issued pursuant to Paragraph D below, the Contractor shall submit a request for an increase in the Contract Sum as provided in Subparagraph C.1 above. No such claim shall be valid unless the Contractor complies with Subparagraph C.1 above and approved by the County pursuant to Change Order Policy 800-6.

D. MINOR CHANGES IN THE WORK

The Construction Manager may order minor changes in the Work not involving an adjustment in the Contract Price, extension of the time allowed for performance of the work and not inconsistent with the intent of the Contract Documents. Such changes shall be effected by a written Change Directive issued by the Construction Manager, and shall be binding on the County and the Contractor. The Contractor shall carry out such written orders promptly.

E. BONDS

If any change order results in an increase in the contract price, the contractor shall increase the penal sum of the performance and payment bonds to equal the increased price.

00800-88 DISAGREEMENT WITH ORDERS FOR CHANGE

Contractor's written acceptance of a Change Order or other order for changes shall constitute his final and binding agreement to the provisions thereof and a waiver of all claims in connection therewith, whether direct or consequential in nature. Should Contractor disagree with any order for changes, he may submit a notice of potential claim to the Construction Manager, at such time as the order is set forth in the form of a Change Order. Disagreement with the provisions of an order for changes shall not relieve Contractor of his obligation under Article 00800-87 of this Agreement.

00800-89 NO WAIVER OF REMEDIES

Exercise by the County of any remedy is not exclusive of any other remedy available to County and shall not constitute a waiver of any such other remedies. Failure of the County to exercise any remedy, including breach of contract remedies, shall not preclude the County from exercising such remedies in similar circumstances in the future.

00800-90 LAND AND RIGHTS-OF-WAY

The owner will provide, as indicated in the Contract Documents and prior to Notice to Proceed, the lands upon which the work is to be done, right-of-way for access thereto, and such other lands which are designated for the use of the Contractor. The Contractor shall confine the Contractor's work and all associated activities to the easements and other areas designated for the Contractor's use. The Contractor shall comply with any limits on construction methods and practices which may be required by easement agreements. If, due to some unforeseen reason, the necessary easements are not obtained, the Contractor shall receive an equitable extension of contract time dependent upon the effect on the critical path of the project schedule or the County may terminate the Contract for its convenience.

00800-91 COORDINATION WITH STATE DEPARTMENT OF TRANSPORTATION

No clearing or grading shall be completed by Contractor within the State Department of Transportation (DOT) area under construction. The Contractor must coordinate his construction scheduling with DOT.

If the Contractor begins work before DOT's completion date, he must obtain the approval of DOT before starting work in the area. The state DOT has the right to stop the Contractor's work the DOT area.

The Contractor shall receive no additional compensation or damages resulting from delay or work stoppage from DOT actions or scheduling.

Contractor shall obtain DOT drawings of the DOT, project area for verification of road geometry, storm drains, etc. from Georgia Department of Transportation or Fulton County. The Contractor is responsible for obtaining any pertinent DOT revisions.

INDEX

SUBJECT	GENERAL CONDITION ARTICLE #
Administration of Contract	17
Applicable Law	7
Assignment	13
Blasting and Excavation	26
Changes	87, 88
Clean Site	29
Codes	4
Commencement of Work	49
Contract Documents	2
Contractor's Representative	66
Defective Work	31, 32
Definitions	3
Delay	51, 52, 54, 55
Extension of Time	52, 53, 54
Familiarity of Time	1, 22
Final Payment	84
Governing Law	86
High Voltage Lines	27
Inclement Weather	53
Indemnification	15
Inspections	23, 61, 62, 68, 69
Interruption	48
Licenses	8
Liquidated Damages	46, 48
New Materials	33, 63
Notices	24
Payment	72, 73, 75
Payment of Subcontractors	75, 76
Payment Upon Substantial Completion	82, 84
Payroll Reports	65
Permits	8

Progress Payments	72, 73, 77, 78, 79, 80
Protection of Work	30, 64
Records Inspection	45
Retainage	11, 74
Safety	25
Scaffolding and Staging	28
Scheduling	70
Service of Process	14
Stop Work Order	37
Subcontractors	67, 76
Substantial Completion	81
Suspension	48
Supervision of Work	16, 66
Surety's Responsibility	17
Taxes	9, 10
Termination for Cause	38, 44, 47
Termination for Convenience	39, 40, 41
Time of the Essence	50
Warranties	33, 34, 35, 36
Work Behind Schedule	56

EXHIBIT A

FINAL AFFIDAVIT

TO FULTON COUNTY, GEORGIA

I, _____, hereby certify that all suppliers of materials, equipment and service, subcontractors, mechanic, and laborers employed by _____ or any of his subcontractors in connection with the design and/or construction of _____ at Fulton County have been paid and satisfied in full as of _____, 20___, and that there are no outstanding obligations or claims of any kind for the payment of which Fulton County on the above-named project might be liable, or subject to, in any lawful proceeding at law or in equity.

_____
Signature

_____
Title

Personally appeared before me this _____ day of _____, 20_____. _____, who under Oath deposes and says that he is _____of the firm of _____, that he has read the above statement and that to the best of his knowledge and belief same is an exact true statement.

_____
Notary Public

_____
My Commission expires

END OF SECTION

SECTION 9

SPECIAL CONDITIONS

STATEMENT OF BIDDER'S QUALIFICATIONS AND SAFETY RECORD FORM

STATEMENT OF BIDDER'S QUALIFICATIONS
This Statement is to accompany bids submitted for the following project:
#16ITB090716K-EC, Little River WRF Expansion Project S-134. Bidders must meet the minimum qualification criteria set forth under items 5, 7, 8, 9 10, 11 and 12 of this section and must provide the organization chart as set forth under item 6 of this section to be deemed a "Responsible and Responsive Bidder".

1. NAME OF BIDDER: _____

2. BUSINESS ADDRESS: _____

_____

3. TELEPHONE NUMBER: _____

4. OFFICIAL REPRESENTATIVE AND TITLE: _____

_____

5. Using the forms provided in this Section, list previously completed or current projects which are similar in scope and complexity to this project which were completed or assigned to your firm or joint venture, including: Name of project, location of project, owner's name, address and phone number, description of work performed, initial contract amount, final contract amount, start date, scheduled completion date and actual completion date. (If a joint venture, list separately for each joint venture partner.) Limit to 5.

   a. Contractors must have successfully completed at least two contracts involving construction or modification of an activated sludge wastewater treatment plant with at least tertiary treatment and with solids handling systems. Work will have included reinforced concrete, erection of structural steel, piping, installation of process and mechanical equipment, odor control, electrical, instrumentation and instrumentation systems with a capacity of not less than 2 MGD and a construction value of not less than $15,000,000.

6. Provide the following information for the organization proposed for this project:

   a. Organizational chart.

   b. Indicate the participation by the various members in the organization, as shown on the organizational chart, in the management and in the division of work (If a joint venture, indicate percent of man hours and percent of project cost to be performed by each joint venture member).

7. Using the forms provided in this Section, provide information for the Project Manager and the Project Superintendent.

   a. Project Manager must have been project manager for duration of project and successfully completed at least two contracts involving construction or modification of an activated sludge wastewater treatment plant with at least tertiary treatment and with solids handling systems. Work will have included reinforced concrete, erection of structural steel, piping, installation of process and mechanical equipment, odor control, electrical, instrumentation and instrumentation systems with a capacity of not less than 2 MGD and a construction value of not less than $15,000,000.

   b. Project Superintendent must have successfully completed at least two contracts involving construction or modification of an activated sludge wastewater treatment plant with at least tertiary treatment and with solids handling systems. Work will have included reinforced concrete, erection of structural steel, piping, installation of process and mechanical equipment, odor control, electrical, instrumentation and instrumentation systems with a capacity of not less than 2 MGD and a construction value of not less than $15,000,000.

8. The Contractor must have an established Safety Program. Complete the attached form entitled "CONTRACTOR SAFETY RECORD FORM".

9. The Contractor's Workman's Compensation Ratings (EMR-Experience Modification Rate) must not exceed an average of 1.0 over the last three (3) years.

Year	Experience Modification Rate (EMR)
2016	
2015	
2014	
Average	

10. The Contractor's OSHA Incidence Rates must not exceed the Industry Standard for Construction, published by the U.S. Department of Labor (2012) for Heavy and Civil Engineering Construction, all industries, (i.e.-Recordable Incidence Rates of 3.2 and Days Away from Work Incidence Rates of 1.7 per OSHA definition and calculation) for the last three (3) years.

Year	Total Recordable Incidents	Total Hours Worked	OSHA Incidence Rate*
2016			
2015			
2014			
Average			

Year	Total Days Away from Work Incidents	Total Hours Worked	OSHA Incidence Rate*
2016			
2015			
2014			
Average			

* Use your OSHA Form No. 200 and the formula:

(Total Incidents x 200,000 hours) ÷ (Number of hours worked) = Incidence Rate

11. If there have been any fatalities during the last five (5) years on any projects performed by the Contractor or on any work performed under the direct supervision of a proposed Project Manager and the Contractor or proposed Project Manager was cited by OSHA for "Willful", in performing the work in which the fatality occurred, the Contractor will be disqualified based on the County's review. The Contractor may also be disqualified in the event that a Recordable Incident occurred due to the same condition that existed when a previous fatality occurred and resulted in an OSHA citation for failure to implement a corrective action plan.

    a. Fatalities during the last five years where Contractor was cited by OSHA for "Willful" Violation

    _____

    b. Fatalities during the last five years where the proposed Project Manager was cited by OSHA for "Willful" Violation

    _____

12. If there have been any incidents during the last five (5) years on any wastewater or water treatment facility projects performed by the Contractor or on any work performed under the direct supervision of a proposed Project Manager that resulted in the wastewater or water treatment facility failing to meet NPDES Discharge Permit requirements due to the actions of the Contractor or Project Manager or failure of the Contractor or Project Manager to perform work on schedule; the Contractor will be disqualified based on the County's review.

    a. NPDES Discharge Permit violations during the last 5 years related to facility projects performed by the Contractor:

    _____

    b. NPDES Discharge Permit violations during the last 5 years related to work under the direct supervision of the proposed Project Manager:

    _____

The previous statements and attachments are true, correct, and complete to the best of my knowledge.

Date: _____

Firm Name: _____

By: _____

Title: _____

Sworn to and subscribed before me

this _____ day of _____ , 20___

Notary Public

CONTRACTOR SAFETY RECORD FORM

I. General Information

Name of Firm: _____

Business Address: _____

Telephone: _____ Fax: _____

Prepared by/Title: _____ Date prepared: _____

II. Experience Modification Rates

List your firm's Workers Compensation Experience Modification Rates (EMR) for the last three years.

Year	Experience Modification Rate (EMR)
2016	
2015	
2014	

III. OSHA Incidence Rates

A. List your firm's Occupational Safety Health Administration (OSHA) incidence rates for the last three years.

Year	Total Recordable Incidents	Total Hours Worked	OSHA Incidence Rate*
2016			
2015			
2014			

* Use your OSHA Form No. 200 and the formula:

(Total Incidents x 200,000 hours) ÷ (Number of hours worked) = Incidence Rate

B. Provide your incidence rates over the last three years for the following categories:

	Incidence Rate by Year*		
Category	Year 2016	Year 2015	Year 2014
Fatalities			
Injuries and Illnesses with Lots Work Days			
Injuries and Illnesses with Restricted Work Days			

* Use your OSHA Form No. 200 and the formula:

(Total Incidents x 200,000 hours) ÷ (Number of hours worked) = Incidence Rate

C. Does your firm have any upheld OSHA citations in the past five years?

Yes ☐ No ☐ (If yes, attach explanation)

IV. Safety Program Information

A. Do you have a written safety program?

Yes ☐ No ☐ (If yes, attach outline)

B. Which of the following does your safety program contain:

1. Does your company require health and safety training of its subcontractors?

Yes ☐ No ☐

2. Is documentation of health and safety training required?

Yes ☐ No ☐

3. Do you have a Hazard Communication Program (29 CFR 1910.1200, CCR Title 8 Section 5194)?

Yes ☐ No ☐

4. Do you have a Confined Space Entry and Rescue Program (29 CFR 1910.146, CCR Title 8 Section 5156-5159)?

Yes ☐ No ☐ (If yes, attach explanation)

5. Do you have a "Hot Work" permit program (29 CFR 1910.146, CCR Title 8 5156-5159)?

Yes ☐ No ☐ (If yes, attach explanation)

6. Do you have a "Lock-Out/Tag-Out" program (29 CFR 1910.417)?

Yes ☐ No ☐ (If yes, attach explanation)

C. Do you have an Equipment Maintenance Program for the following:

1. Miscellaneous construction tools and equipment? Yes ☐ No ☐

2. Ladders? Yes ☐ No ☐

3. Scaffolds? Yes ☐ No ☐

4. Heavy Equipment? Yes ☐ No ☐

5. Vehicles? Yes ☐ No ☐

D. Do you have a new employee safety orientation program?

Yes ☐ No ☐

1. If yes, does it include instruction in the following:

(a) Company Safety Policy Yes ☐ No ☐
(b) Company Safety Rules Yes ☐ No ☐
(c) Safety Meeting Attendance Yes ☐ No ☐
(d) Company Safety Record Yes ☐ No ☐
(e) Hazard Recognition Yes ☐ No ☐
(f) Hazard Reporting Yes ☐ No ☐
(g) Injury Reporting Yes ☐ No ☐
(h) Non-Injury Accident Reporting Yes ☐ No ☐
(i) Personal Protective Equipment Yes ☐ No ☐
(j) Respiratory Protection Yes ☐ No ☐
(k) Fire Protection Yes ☐ No ☐
(l) Housekeeping Yes ☐ No ☐
(m) Toxic Substance Yes ☐ No ☐
(n) Electrical Safety Yes ☐ No ☐
(o) Fall Protection Yes ☐ No ☐
(p) First-Aid/CPR Yes ☐ No ☐
(q) Driving Safety Yes ☐ No ☐
(r) Hearing Conservation Yes ☐ No ☐
(s) Lock-Out/Tag-Out Yes ☐ No ☐
(t) Bloodborne Pathogens Yes ☐ No ☐
(u) Asbestos Yes ☐ No ☐
(v) Confined Spaces Yes ☐ No ☐
(w) Hazard Communication Yes ☐ No ☐

E. Do you conduct safety meetings for your employees? Yes ☐ No ☐

1. If yes, how often:

Daily ☐ Weekly ☐ Bi-weekly ☐ Monthly☐ As Needed ☐

F. Do you conduct health and safety audits of work in progress?

Yes ☐ No ☐

1. If yes, who conducts the audits?

_____

2. How often are the audits conducted?

_____

G. Do you notify all employees of accidents and precautions related to accidents and near misses?

Yes ☐ No ☐

1. If yes, how is this notification accomplished?

(a) Safety meetings Yes ☐ No ☐
(b) Post notification in office Yes ☐ No ☐
(c) Post notification at the site where the incident occurred Yes ☐ No ☐
(d) Other _____

H. Is safety a criteria in evaluating the performance of:

1. Employees Yes ☐ No ☐
2. Supervisors Yes ☐ No ☐
3. Management Yes ☐ No ☐

I. Does your firm hold "tailgate" safety meetings? Yes ☐ No ☐

1. If yes, how often:

Daily ☐ Weekly ☐ Bi-weekly ☐ Monthly☐ As Needed ☐

J. Does your company have a drug and alcohol testing policy?

Yes ☐ No ☐

K. Does your company require that subcontractors participate in drug surveillance/testing program?

Yes ☐ No ☐

L. Does your company have a method of disseminating safety information?

Yes ☐ No ☐

END OF SECTION