FC-5076
ATLANTA FULTON COUNTY WATER TREATMENT PLANT BULK HYPOCHLORITE SYSTEM AND FILTER/PLATE SETTLER IMPROVEMENTS

VOLUME I OF II

ATLANTA-FULTON COUNTY
WATER RESOURCES COMMISSION
JOHNS CREEK, GEORGIA

MAY 2010

williams-russell and johnson, inc.
engineers - planners - architects

BULK HYPOCHLORITE SYSTEM AND FILTER/PLATE SETTLER IMPROVEMENTS

GEORGIA REGISTERED No. 12150 PROFESSIONAL 25FEB10 ENGINEER LOUIS A. HETTEL

GEORGIA REGISTERED No. PE 028663 PROFESSIONAL 2/25/10 ENGINEER P. MATHIS BRADEWELL

GEORGIA REGISTERED No. 11922 PROFESSIONAL 02/25/10 ENGINEER THOMAS H. MIDDLEBROOKS

GEORGIA REGISTERED No. 019675 PROFESSIONAL 02/25/10 ENGINEER NGAN MIN KONG

STATE OF GEORGIA CHARLES PERINCHIEF, JR. 02/25/10 CERTIFICATE NO. 005493 REGISTERED ARCHITECT

GEORGIA REGISTERED PE 16028 PROFESSIONAL 2/25/10 ENGINEER VICTOR L. WOOD

GEORGIA REGISTERED No. 009533 PROFESSIONAL 02/25/10 ENGINEER BHAGU N. AHUJA

ATLANTA-FULTON COUNTY
WATER RESOURCES COMMISSION
JOHNS CREEK, GEORGIA

Vol. I of II

Invitation to Bid
Instructions to Bidders
Draft Commission-Contractor Agreement

Appendices

A EBO Requirements
B Insurance and Bonding Requirements
C Contractor Disclosure Form and Questionnaire
D Local Bidder Preference Program

Exhibits

A/A-1 Construction Legislation (to be inserted after City Council and County action)
B Required Submittals
- Authorization to Transact Business
- Bid Bond/Bid Guarantee
- Bid Documentation
- Bid Form
- Statement of Bidder's Qualifications
- Affidavit
- Insurance Coverage and Bonding Capacity
- Non-Collusion Affidavit
- Bidder Financial Statements and Other Financial Information

C Georgia Utility Contractor License
D Georgia Security and Immigration Compliance Act of 2006 Affidavits
E Performance and Payment Bonds
F Addenda (to be inserted at time of Contract Execution)

General Conditions
Special Conditions

Vol. II of II

TECHNICAL SPECIFICATIONS

Section	Title
Division 1 - General Requirements	
01010	Summary of Work
01011	Unique Requirements
01016	Occupancy
01020	Equipment Allowances
01025	Measurement and Payment
01060	Regulatory Requirements
01340	Shop Drawings, Product Data and Samples
01350	Project Document Tracking and Control System
01410	Testing Laboratory Service
01510	Temporary Facilities
01540	Job Site Security
01562	Dust Control
01580	Project Identification and Signs
01590	Field Offices
01610	Transportation and Handling
01611	Storage and Protection
01630	Substitutions and Options
01640	General Equipment and Stipulations
01645	Manufacturer Services
01655	Starting of Systems
01710	Cleaning and Waste Management
01720	Record Documents
01730	Operation and Maintenance Data
01740	Warranties and Bonds
Division 2 - Site Work	
02060	Demolition of Existing Facilities
02073	Removal of Existing Equipment and Piping
02075	Removal of Existing Concrete and Masonry
02100	Site Preparation
02112	Tree Protection
02125	Erosion and Sedimentation Control
02140	Dewatering
02150	Sheeting, Shoring and Bracing
02200	Earthwork
02224	Trench Excavation and Backfill
02228	Waste Material Disposal
02521	Concrete Curbs and Gutters
02523	Concrete Sidewalk and Driveway
02607	Manholes
02609	Resetting Manhole Frames

02610 Site Piping
02666 Piping Testing and Acceptance
02675 Disinfection of Potable Water Facilities
02710 Underdrains and Subsurface Drainage
02774 Storm Drainage System
02900 Landscape

Division 3 – Concrete

03100 Concrete Formwork
03200 Concrete Reinforcement
03250 Concrete Accessories
03300 Cast-In-Place Concrete
03602 Non-Metallic Grouting

Division 4 - Masonry

04210 Brick Masonry
04220 Concrete Unit Masonry
04270 Glass Unit Masonry

Division 5 - Metals

05102 Structural Metals
05312 Steel Roof Decking
05500 Miscellaneous Metals

Division 6 - Wood and Plastic

06100 Rough Carpentry
06610 Fiberglass Grating, Stairs, Treads, Supports and Handrails

Division 7 - Thermal and Moisture Protection

07110 Membrane Waterproofing
07150 Dampproofing
07210 Building Insulation
07222 Roof Insulation
07410 Preformed Fascia and Soffit Panels
07600 Flashing and Sheet Metal
07610 Sheet Metal Roofing
07900 Sealants

Division 8 - Doors and Windows

08225 Fiberglass Reinforced Polyester Doors
08710 Finish Hardware
08735 Weatherstripping and Thresholds

Division 9 - Finishes

09900 Painting

Division 11 - Equipment

11215 Peristaltic Type Hose Pumps
11232 Magnetically Coupled Chemical Pump
11247 Thermoplastic Vertical Sump Pump
11325 Inclined Plate Settlers
11374 Water Filter and Appurtenances

Division 13 - Special Construction

13215 Fiberglass Storage Tanks
13226 Filter Media

Division 15 - Mechanical

15050 Basic Mechanical Materials and Methods
15062 Ductile Iron Pipe and Fittings
15069 Plastic Pipe
15094 Pipe Supports and Hangers
15095 Pipe Couplings and Expansion Joints
15100 Valves
15205 Process Piping Specialties
15405 Water Supply System
15410 Sanitary Drainage System
15450 Plumbing Equipment
15835 Electric Heaters
15870 Fans
15940 Air Outlets and Inlets

Division 16 - Electrical

16000 Electrical Power and Systems
16040 Electrical Demolition
16050 Basic Electrical Materials and Methods
16111 Conduit
16120 Wire and Cable
16130 Boxes
16150 Motors
16160 Cabinets and Enclosures
16455 Grounding
16461 Dry Type Transformers
16470 Panelboards
16489 Variable Speed Drives
16510 Lighting Fixtures
16670 Lightning Protection System
16722 Fire Alarm System

16950 Testing

Division 17 - Instrumentation

17000 Instrumentation and Controls
17050 Loop Descriptions
17100 Control Panels
17120 Surge Protection
17200 Control Devices
17250 Programmable Logic Controllers
17300 Instrumentation Devices
17950 Instrument Installation

Invitation to Bid

FC-5076
ATLANTA-FULTON COUNTY WATER TREATMENT PLANT
BULK HYPOCHLORITE SYSTEM AND
FILTER/PLATE SETTLER IMPROVEMENTS

ATLANTA-FULTON COUNTY WATER RESOURCES COMMISSION
JOHNS CREEK, GEORGIA

Sealed Bids, for furnishing all materials, labor, tools, equipment and appurtenances necessary for the construction of the FC-5076 Atlanta-Fulton County Water Treatment Plant Bulk Hypochlorite System and Filter/Plate Settler Improvements will be received by the Atlanta-Fulton County Water Resources Commission, a joint venture partnership between the City of Atlanta, a municipal corporation of the State of Georgia ("City"), and Fulton County, a political subdivision of the State of Georgia ("County") ("Commission") at office of the Commission, 9750 Spruill Road, Johns Creek, Georgia 30022, until 1:59 p.m., local time, on June 10, 2010, and then at said office publicly opened and read aloud.

Bidders must attend the mandatory, guided, pre-bid conference and site inspection to be held on May 28, 2010 at 10:00 a.m. Potential major subcontractors, e.g., electrical, instrumentation, are encouraged to attend the meeting and tour. This will be the only date and time the plant will be made available for inspection by potential bidders. A bid submitted by a Bidder which did not attend the pre-bid conference and tour will not be opened.

The Project consists of upgrading the filter and plate settler basins on Phases 1 and 2 and converting the disinfection system to bulk deliveries of sodium hypochlorite including: providing access ladders on Phase 1 plate settlers; replacing Phase 2 plate settlers; adding underdrains and/or caps to Phase 1 and Phase 2 filters; demolishing the existing chlorine gas disinfection system; adding a new bulk hypochlorite storage and feed system and storage room; and associated site, architectural, mechanical, electrical, and instrumentation and control work.

The work will be awarded in one Contract. The Bid/Contract Documents for this Project may be examined and copies obtained at the cost of $300.00 per copy at Jordan, Jones & Goulding, 6801 Governors Lake Parkway, Bldg. 200, Norcross, Georgia 30071. A viewing copy **(FOR VIEWING PURPOSES ONLY)** will be available at the City of Atlanta, Department of Procurement, 55 Trinity Avenue, S.W., Suite 1790, Atlanta, Georgia 30303 and at the Fulton County Department of Purchasing and Contract Compliance, 130 Peachtree Street, Suite 1168, Atlanta, Georgia 30303.

Each Bid must be accompanied by a Bid Bond, prepared on the form of Bid Bond attached to the Bid/Contract Documents or a Surety Company's Standard Bid Bond, duly executed by the Bidder as principal and having as surety thereon a surety company licensed to do business in the State of Georgia by the Georgia Insurance Commissioner and listed in the latest issue of U.S. Treasury Circular 570, in the amount of five percent of the Bid.

The successful Bidder for this Contract will be required to furnish a satisfactory Performance Bond and Payment Bond each in the amount of 100 percent of the Bid, and proof of insurance in accordance with the requirements set forth in Appendix B.

The Owner reserves the right to reject all Bids, to waive informalities and to readvertise.

ATLANTA-FULTON COUNTY WATER RESOURCES COMMISSION
Kathy Crews, General Manager

END OF SECTION

PART I

INSTRUCTIONS TO BIDDERS

TABLE OF CONTENTS

PART I INSTRUCTIONS TO BIDDERS

1.	SOLICITATION/NOT OFFER	3
2.	RECEIPT AND OPENING OF BIDS	4
3.	PREPARATION OF BIDS	4
4.	GEORGIA UTILITY CONTRACTOR'S LICENSE	5
5.	HOW TO SUBMIT BIDS	5
6.	EXECUTION OF BIDDING DOCUMENTS	6
7.	FAILURE TO BID [INTENTIONALLY DELETED]	
8.	ERRORS IN BIDS	7
9.	DISQUALIFICATION OF BIDDERS	7
10.	REJECTION OF BIDS	8
11.	FAILURE TO PERFORM	8
12.	BID FORM	8
13.	BID GUARANTEE	9
14.	STATEMENT OF BIDDER'S QUALIFICATIONS	9
15.	AFFIDAVITS	10
16.	EQUAL BUSINESS OPPORTUNITY PROGRAM	10
17.	AUTHORIZATION TO TRANSACT BUSINESS	11
18.	BUSINESS NON-DISCRIMINATION POLICY	11
19.	EQUAL EMPLOYMENT OPPORTUNITY IN PURCHASING AND CONTRACTING	11
20.	CONTRACT EMPLOYMENT REPORT	11
21.	FIRST SOURCE JOBS POLICY EMPLOYMENT	11
22.	BID FORM/BID SCHEDULE/BID DATA/CHECKLIST	11
23.	WAGE RATES [INTENTIONALLY DELETED]	
24.	PRE-BID INSPECTION	12
25.	ADDENDA AND INTERPRETATIONS	12
26.	PRE-BID CONFERENCE	13
27.	TIME FOR RECEIVING BIDS	13
28.	BID MODIFICATION AND WITHDRAWAL	13
29.	BID EVALUATION	14
30.	AWARD CRITERIA	16
31.	SURETY BONDS	17
32.	POWER OF ATTORNEY	18
33.	INSURANCE REQUIREMENTS	18
34.	LAWS AND REGULATIONS	18
35.	AGREEMENT TERMS	19
36.	LIQUIDATED DAMAGES	19
37.	EXECUTION OF AGREEMENT	19
38.	POST AWARD CONFERENCE	19
39.	SUBSTITUTIONS	20
40.	PERMITS, EASEMENTS AND RIGHTS-OF-WAY	20
41.	PROVISION OF SUBCONTRACTING DATA	20

FC-5076
ATLANTA-FULTON COUNTY WATER TREATMENT PLANT
BULK HYPOCHLORITE SYSTEM AND
FILTER/PLATE SETTLER IMPROVEMENTS

PART I

INSTRUCTIONS TO BIDDERS

1. SOLICITATION/NOT OFFER

This solicitation does not constitute an offer by the **Atlanta-Fulton County Water Resources Commission, a joint venture partnership between the City of Atlanta ("City") and Fulton County ("County")** (the "**Commission**") to enter into an agreement and is not an offer that can be accepted by the Bidder to form an agreement. No language contained anywhere in this solicitation should be construed or interpreted to convey an offer to enter into agreement with the Commission. The terms of this solicitation are to be considered as a whole. However, no terms may be considered in whole or in part to constitute an offer to enter into an agreement with the Commission.

This solicitation is only an invitation for offers from interested Bidders and no offer shall bind the Commission.

This solicitation is an invitation for the Bidder to make an offer to the Commission in the form of a Bid. No offer made in response to the terms and conditions of this solicitation may include any terms and conditions which can bind the Commission to any contractual Agreement until such time as the Agreement has first been awarded by the Commission to the most responsible and responsive bidder whose bid meets the material requirements and criteria set forth in the solicitation and is accepted and duly executed and sealed by the City, the County and agents of the Commission, as designated on the signature page of the Agreement included in this solicitation. The term of your offer must conform to all applicable federal and local laws, including without limitation, all ordinances of the City and County and all requirements of the solicitation.

YOUR OFFER IS A FIRM OFFER AND MAY NOT BE WITHDRAWN EXCEPT AS AUTHORIZED BY GEORGIA LAW, O.C.G.A. 36-91-52, AND THE CODE OF THE CITY OF ATLANTA.

Your response to this solicitation is a firm offer, which the Commission may accept or reject in whole or in part without any further action on your part. The acceptance of your offer by the Commission will form an Agreement, which is enforceable against you.

2. RECEIPT AND OPENING OF BIDS

Sealed Bids for the Contract **FC-5076 Atlanta-Fulton County Water Treatment Plant Bulk Hypochlorite System and Filter/Plate Settler Improvements** will be received by Owner at office of the Owner, 9750 Spruill Road, Johns Creek, Georgia 30022, no later than **1:59 p.m., EDT**, (as verified by the Bureau of National Standards) on **June 10, 2010.**

ABSOLUTELY NO BID WILL BE ACCEPTED AFTER 1:59 P.M.

All Bids received by the time and date established above will be opened and publicly read.

THE LOCAL BIDDER PREFERENCE PROGRAM IS APPLICABLE TO THIS PROJECT. IN ORDER TO BE APPROVED AS A LOCAL BIDDER AND RECEIVE A BID PREFERENCE ON AN ELIGIBLE LOCAL PROJECT, THE APPLICATION FOR APPROVAL AS A LOCAL BIDDER AND ALL SUPPORTING DOCUMENTS MUST BE RECEIVED BY THE COMMISSION NO LATER THAN THIRTY (30) DAYS PRIOR TO THE DATE BIDS ARE RECEIVED ON SUCH ELIGIBLE PROJECT. (SEE APPENDIX D)

3. PREPARATION OF BIDS

All Bids must be submitted on bid document forms supplied by the Commission and shall be subject to all requirements of the Agreement Documents. All Bids must be regular in every respect and no interlineations, excisions, or special conditions shall be made or included in the Bid by the Bidder.

Lump sum, unit price, and extensions of unit prices must be entered in the appropriate spaces provided on the Bid Schedule/Bid Form. Unit prices shall include an appropriate allocation of overhead and other indirect costs so that the summation of unit price extensions and lump sum items represents the total bid amount. In the case of any Bid item for which a fixed amount

predetermined by the Commission has already been entered on the Bid Schedule, the amount so entered shall be conclusive of all Bidders as the price for such item, and shall not be revised unless the Commission directs a change in the Scope of Work affecting the item to which such amount relates.

The Commission may consider as irregular any conditional bid or any Bid on which there is an alteration of, or departure from, the Bid Schedule hereto attached
and at its option may reject the same.

Erasures or other changes in the Bids must be explained or noted over the signature of the Bidder. Failure to do so shall render the Bidder as non-responsive and cause rejection of the Bid.

Failure to execute the Bid Schedule/Bid Form documents may render the Bidder as non-responsive and cause rejection of the Bid.

4. GEORGIA UTILITY CONTRACTOR'S LICENSE (REQUIRED SUBMITTAL)

The Bidder shall provide a Bidder's Georgia Utility Contractor's License Number. A utility Contractor's license number held by a Subcontractor or issued by another state does **NOT** fulfill this requirement in lieu of the Bidder's Georgia Utility Contractor's License. Failure to provide the Bidder's Georgia Utility Contractor License Number will result in a rejection of the Bid at the Opening. The Bidder is required to submit the certificate included in Exhibit C.

5. HOW TO SUBMIT BIDS

The Bid and required submittals, including the Bid Schedule, the Bid Documentation, the Bid Form, the acknowledgment of each Addendum, the Bid Bond Guarantee, the Power of Attorney for the attorney-in-fact signing the Bid Guarantee, the Affidavit, Office of Contract Compliance forms/certificates, and other documents as required in these Agreement documents may be photocopied for submission of Bids. Submit the original and five (5) copies of the Bid and required attachments.

The complete package of Bid documents shall be enclosed in envelopes or boxes (outer and inner), both of which shall be sealed and clearly labeled with the project name, name of Bidder and date and time of bid opening in order to guard against premature opening of the Bid.

Bids must be addressed to:

Kathy Crews
General Manager
Atlanta Fulton County Water Resources Commission
9750 Spruill Road
Johns Creek, Georgia 30022

6. EXECUTION OF BIDDING DOCUMENTS

A complete set of Bidding Documents have been bound separately from the agreement forms and Specifications for the use of Bidders. Bidders shall submit their Bids, together with the bid guarantee and all forms which the Bidder is required to sign, executed in the appropriate manner as set forth below:

a. If the Bidder is a corporation, all documents requiring execution by the Bidder shall be signed by the president or vice-president of the corporation, whose signature shall be attested by the secretary or assistant secretary of the corporation and the corporate seal affixed.

b. If the Bidder is an individual, he or she shall sign the documents and his or her signature shall be notarized by a notary public.

c. If the Bidder is an individual doing business under a trade name, all documents shall be signed by the Bidder whose signature shall be followed by either, "doing business as," or "trading as," followed by the trade name of the Bidder's business, and notarized by a notary public.

d. If the Bidder is a partnership, all forms shall be executed by placing the name of the partnership followed by "By: (the name of the partner executing)" followed by the word "Partner," and notarized by a notary public.

e. If the Bidder is a joint venture, each party to the joint venture shall execute the Bidding Documents in the manner set forth in items a, b, c, or d of this article of the Instructions to Bidders as appropriate for this type of organization.

If the Bidder is a Joint Venture, all other documents in the Bidding Documents shall be executed by one of the parties to the joint venture, as

provided by Article 4 of the Joint Venture Statement, in the same manner as the executed said Joint Venture Statement.

7. FAILURE TO BID [INTENTIONALLY DELETED]

8. ERRORS IN BIDS

Bidders and their authorized representatives are expected to fully familiarize themselves with the conditions, requirements, and Specifications before submitting Bid. Failure to do so will be at the Bidder's own risk. In case of error in extension or prices in the Bid, the unit prices(s) shall govern.

9. DISQUALIFICATION OF BIDDERS

Any of the following may be considered as sufficient for disqualification of a Bidder and the rejection of the Bid:

a. Submission of more than one Bid for the same work by an individual, firm, partnership or Corporation under the same of different name(s);

b. Evidence of collusion among Bidders;

c. Previous participation in collusive bidding on Work for the Commission, City of Atlanta or Fulton County;

d. Submission of an unbalanced Bid, in which the prices quoted for same items are out of proportion to the prices for other items;

e. Lack of competency of Bidder. The Agreement will be awarded only to a Bidder(s) rated as capable of performing the Work. The Commission may declare any Bidder ineligible at any time during the process of receiving Bids or awarding the Agreement where developments arise which, in the opinion, the Commission adversely affect the Bidder's responsibility; however, the Bidder will be given an opportunity by the Commission to present additional evidence before final action is taken;

f. Lack of responsibility as shown by past Work judged from the standpoint of workmanship and progress; financial

irresponsibility, including but not limited to, leaving retainage in Commission account;

g. Uncompleted Work for which the Bidder is committed by Agreement, which in the judgment of the Commission, might hinder or prevent the prompt completion of Work under this Agreement if awarded to such Bidder; and

h. Being in arrears on any of his existing or prior contracts with the Commission or in litigation which the Commission thereon or having defaulted on a previous contract with the Commission.

10. REJECTION OF BIDS

Bids may be considered irregular and may be rejected if they show omissions, alterations of forms, addition not called for, conditions limitations, unauthorized alternate Bids or other irregularities of any kind. The Commission reserves the right to waive any informalities or irregularities of Bids.

11. FAILURE TO PERFORM

If for any reason the Contractor fails to perform any of the Work required by the Specifications, or if the Work performed is not as specified, the Commission reserves the absolute right to have such Work performed by other persons and deduct the cost thereof from the Bid price of the company under Agreement.

12. BID FORM (REQUIRED SUBMITTAL)

Unit prices shall include an appropriate allocation of overhead, other indirect costs and profits so that the summation of unit price extensions and lump sum items represents the total Bid amount. In the case of any Bid item for which a fixed amount predetermined by the Commission has already been entered on the Bid Form, the amount so entered shall be conclusive of all Bidders as the price for such item, and shall not be revised unless the Commission directs a change in the Scope of the Work affecting the item to which such amounts relates. Award will be based on the total fixed unit cost for all items aggregated.

13. BID GUARANTEE (REQUIRED SUBMITTAL)

Bidders are required to furnish a Bid Guarantee in the amount of five percent (5%) of the total Bid amount. Bidders offering alternative Bids shall provide a guaranty for the largest total Bid amount. At the option of the Bidder, the guaranty may be a certified check payable to the order of the Commission or a bid bond in the form attached. The bid bond shall be secured by a guaranty or a surety company listed in the latest issue of U.S. Treasury Circular 570. The amount of such bid bond shall be within the maximum amount specified for such company in Circular 570. No Bid shall be considered unless it is accompanied by the required guaranty. Bid Guarantee shall ensure the execution of the Agreement and the furnishing of the performance and payment bonds and insurance by the successful Bidder as required by the Agreement Documents. The Bid Guarantee, except for Bid Bonds, of the Bidders submitting the five (5) lowest total Bid amounts for the Agreement will be retained either until the successful Bidder has signed the Agreement and furnished performance and payment bonds and certificates of insurance, or until the ninetieth (90th) calendar day after the Bid opening date, whichever is sooner. Other Bid Guarantees will be returned within ten (10) calendar days after the Bid opening date. Bid Guarantees being held pending the signing of the Agreement and furnishing other documents will be returned within three (3) calendar days thereafter. Each Bidder agrees that if it is awarded the Agreement and fails to execute the Agreement and to furnish the other documents required within fifteen (15) days, the Commission will retain the Bid Guarantee as liquidated damages and not as a penalty.

Attorneys-in-fact who sign bid bonds must file with the bond a certified and effectively dated copy of their power of attorney.

14. STATEMENT OF BIDDER'S QUALIFICATIONS (REQUIRED SUBMITTAL)

The statement of Bidder's Qualifications must be filled out completely, signed by the Bidder, and notarized.

The Commission shall have the right to require such additional information, as it deems necessary to evaluate the ability of the Bidder to successfully perform the Work.

The Commission reserves the right to reject any Bidder who does not satisfy the Commission as to his ability to successfully perform the Work, previous pre-qualification notwithstanding.

The cause for rejection shall include:

a. Non-compliance of the Bidder with the requirements of an equal employment opportunity in contracting program as may be prescribed by ordinance;

b. Non-compliance by the Bidder with the requirements of a minority and female business enterprise participation program as may be prescribed;

c. Inadequate quality, availability and adaptability of the supplies or services to the particular use required; or

d. Unacceptable number and scope of conditions attached to the Bid by the Bidder, if any.

15. AFFIDAVITS (REQUIRED SUBMITTAL)

1) The affidavit must be filled in completely, signed by the Bidder, and notarized. Violation of the statements set forth in this affidavit may be grounds for rejection of Bid, or termination of Agreement by the Commission, as appropriate, as well as other appropriate remedies as provided by local, state, and federal statutes.

2) **Georgia Immigration and Security Compliance Act: This Request for Proposals is subject to the Georgia Security & Immigration Compliance Act.** Pursuant to the Georgia Security & Immigration Compliance Act of 2006, as amended on May 11, 2009, bidders and proponents are notified that all bids/proposals for services that are to be physically performed within the State of Georgia must be accompanied by proof of their registration with and continuing and future participation in the E-Verify program established by the United States Department of Homeland Security. A completed affidavit, available at: http://www.atlantaga.gov/business/doingbusiness must be submitted on the top of the bid/proposal at the time of submission, prior to the time for opening bids/proposals. Under state law, the City cannot consider any bid/proposal which does not include a completed affidavit. It is not the intent of this notice to provide detailed information or legal advice concerning the Georgia Security & Immigration Compliance Act of 2006, as amended on May 11, 2009. All bidders/proponents intending to do business with the City are responsible for independently apprising themselves and complying with the requirements of that law and its effect on City

procurements and their participation in those procurements. For additional information on the E-Verify program or to enroll in the program, go to: https://e-verify.uscis.gov/enroll

16. EQUAL BUSINESS OPPORTUNITY PROGRAM (REQUIRED SUBMITTAL)

The Bidder shall complete the Equal Business Opportunity ("**EBO**") Program documents in accordance with the instructions included in APPENDIX A, REQUIREMENTS OF THE CITY OF ATLANTA OFFICE OF CONTRACT COMPLIANCE, and shall properly execute the documents.

A determination by the Commission that misstatements have been made by the Bidder in this document shall cause rejection of Bid or termination of Agreement, as appropriate and shall be grounds for other remedies available under local ordinances, and state or federal statutes.

17. AUTHORIZATION TO TRANSACT BUSINESS (REQUIRED SUBMITTAL)

If the Contractor is a corporation or corporations combined to form a joint venture, the corporation or members of the joint venture team, prior to Agreement execution, must submit documentary evidence from the Secretary of State that the corporation is in good standing and that the corporation is authorized to transact business in the State of Georgia.

18. BUSINESS NON-DISCRIMINATION POLICY

The Commission prefers to do business with firms or institutions that include representation of minorities and women at all levels.

19. EQUAL EMPLOYMENT OPPORTUNITY ("EEO") IN PURCHASING AND CONTRACTING

To be eligible for award of this Agreement, the Bidder must certify and fully comply with the requirements, terms, and conditions of the section on EEO.

20. CONTRACT EMPLOYMENT REPORT

Upon award of an Agreement with the Commission, the successful Bidder must submit a Contract Employment Report ("**CER**") and supplemental information as required to comply with the paragraph, "Monitoring of EEO Policy, Requirements of the Office of Contract Compliance," page EBO-2.

21. FIRST SOURCE JOBS POLICY EMPLOYMENT AGREEMENT (REQUIRED SUBMITTAL LOCATED IN APPENDIX A)

The Bidder shall acknowledge and implement the First Source Jobs Policy.

22. BID FORM; BID SCHEDULE; BID DATA; CHECKLIST (REQUIRED SUBMITTAL)

The Bidder must complete and execute these sections of the Bidding documents.

23. WAGE RATES. (INTENTIONALLY DELETED).

24. PRE-BID INSPECTION

Prior to submission of a Bid, the Bidder shall have made a thorough examination of the Work Site. The Bidder shall become informed as to the nature of the proposed construction, the kind of facilities required to carry out the construction, labor conditions, and all other matters that may affect the cost and time of completion of the Work upon which it bids.

The Bidder shall make itself familiar with all of the Agreement documents and other instructions before submitting its Bid, in order that no misunderstanding shall exist in regard to the nature and character of the Work to be done. No allowance shall be made for any claims that the Bid is based on incomplete information as to the nature and character of the site or the Work involved.

The Contractor, by execution of the Agreement, shall in no way be relieved of any obligation under it due to its failure to receive or examine any form or legal instrument or to visit the site and acquaint itself with the conditions there existing, and the Commission shall be justified in rejecting any claims based on facts regarding that which the Contractor should have known as a result thereof.

25. ADDENDA AND INTERPRETATIONS

All questions by prospective Bidders as to the interpretations of the Bidding Documents must be submitted in writing to: Wayne Price, Director-Specifications/Construction Contracts, Jordan, Jones & Goulding, 6801 Governors Lake Pkwy, Norcross, Georgia 30071, or

emailed to wayne.price@jjg.com, and must be received by **3:00 p.m. EDT on Tuesday, June 1, 2010**. Every interpretation made to a Bidder will be in the form of an addendum to the Bidding Documents. In addition, all addenda will be mailed to each person holding Bidding Documents, but it shall be the Bidder's responsibility to make inquiry as to the addenda issued. All such addenda shall become part of the Agreement and all Bidders shall be bound by such addenda, whether or not received by the Bidders.

The Commission shall not be bound by any information, explanation, clarification, or any interpretation, oral or written, by whosoever made, that is not incorporated into an addendum to the Bidding Documents.

26. PRE-BID CONFERENCE

A Mandatory Pre-Bid Conference and tour of the work site will be held on May 28, 2010 at 10:00 a.m. At that time, the general requirements of the project will be discussed. Any additional questions raised by Bidders will be discussed.

General requirements of the project will be discussed at the Pre-bid Conference. Also discussed will be questions regarding preparation and submission of Bids and general contractual requirements. Bidders will be allowed to ask questions. **Oral answers to questions during the Pre-bid Conference will not be authoritative**.

It should be emphasized, however, that nothing stated or discussed during the course of this conference shall be considered to modify, alter or change the requirements of the Bidding Documents, unless it shall be subsequently incorporated into an addendum to the Bidding Documents.

27. TIME FOR RECEIVING BIDS

Bids received prior to the advertised hour of opening will be kept secured and sealed. The Owner will decide when the specified time has arrived, and no Bid received thereafter will be considered, except that when a Bid arrives by mail after the time fixed for opening, but before the reading of all other Bids is completed, and it is shown to the satisfaction of the Commission that the non-arrival on time was due solely to delay in the mail for which the Bidder was not responsible, such Bid will be received and considered.

28. BID MODIFICATION AND WITHDRAWAL

Bids may be modified after they have been submitted, but only before the Bid opening date and time. Modifications must be signed by the Bidder and must be received by the Commission no later than the Bid opening time and date. Modifications should not reveal the total Bid amount, but should identify the addition and subtraction or other modification in a manner in which the prices will not be known by the Commission until the sealed Bid is opened.

Bids may be withdrawn after they have been submitted, but only before the Bid opening date and time. Withdrawn bids may be resubmitted, but only in the manner in which the Bid was originally submitted. Withdrawals must be signed as stipulated above for modification. Bids may not be withdrawn between the Bid opening time and date and the sixtieth (60th) calendar day thereafter, except as may be agreed upon by a written agreement between the Bidder and the Commission.

29. BID EVALUATION

a. Each Bid timely received and in the Commission's hands at the time set forth for the Bid opening shall constitute an offer to perform the Agreement on the terms and conditions thereof, in strict accordance with the Agreement documents, and all other requirements, all for the Bid total. For good cause and valuable consideration, the sufficiency of which is acknowledged by submittal of a Bid, each Bidder promises and agrees that its Bid shall be irrevocable for a period of ***sixty calendar days*** after the Bid opening and will not be withdrawn or modified during that time. The Commission may accept any Bid by giving the Bidder Written Notice of acceptance during that time. If necessary, the period of time specified may be extended by written agreement between the Commission and the Bidder or Bidders concerned.

b. After the Bids have been opened and before any award is made, the Commission will evaluate the Bid process, the Bid total, the supplements to the Bid form, Bidder's experience, financial data, Local Preference Program, proposed Subcontractors and equipment manufacturers and other data relating to Bidders' responsibility and qualifications to perform the Agreement satisfactorily.

c. All extension of the unit prices shown and the subsequent addition of extended amounts may be verified by the Commission. In the event of a discrepancy between the unit price bid and the extension, the

unit price will be deemed intended by the Bidder and the extension shall be adjusted. In the event of a discrepancy between the sum of the extended amounts and the bid total, the sum of the extended amounts shall govern.

d. Bidder may be required to submit, in writing, the addresses of any proposed Subcontractors or Equipment manufacturers listed on the Bid, and to submit other material information relative to proposed Subcontractors or Equipment manufacturers. The Commission reserves the right to disapprove any proposed Subcontractor or Equipment manufacturers whose technical or financial ability or resources or whose experience are deemed inadequate.

e. The Commission reserves the right to reject any Bid the prices of which appear to be unbalanced, and to reject any or all Bids, or parts thereof, if it determines, in its sole discretion, that such rejection is in the best interest of the Commission. Where only a single responsible and responsive Bid is received, the Commission may in its sole discretion, elect to conduct a price or cost analysis of the Bid. Such Bidder shall cooperate with such analysis and provide such supplemental information as may be required. The determination whether to enter into an Agreement with such sole Bidder shall be solely within the Commission's discretion and not dependent upon performance of a price or cost analysis.

f. Bids will be evaluated on the basis of determining the lowest Bid total of a Bidder, not including alternates, whose Bid is responsive to the Invitation to Bid and who is determined to be technically, financially and otherwise responsible to perform the Agreement satisfactorily, and to meet all other requirements of the Bidding Documents relating thereto. Any Bid may be rejected if it is determined by the Commission to be non-responsive, provided, however, that the Commission reserves the right to waive any irregularities or technicalities which it determines, within its sole discretion, to be minor in nature and in the interest of the public. Furthermore, any Bid may be rejected if it is determined by the Commission, in its sole discretion, that the bidder is not capable of performing the Agreement satisfactorily based upon review of its experience and technical and financial capabilities, or the failure of such bidder to provide information requested relating to such determination. Additionally, the Commission reserves the right to disqualify Bids, before and after the bid opening, upon evidence of collusion with intent to defraud or other illegal practices upon the part of any Bidder(s).

g. The Commission intends to award the Agreement at the earliest practicable date to the lowest responsive, responsible Bidder(s), provided that the Bid is within the funds available for the project. In addition, the Commission reserves the right to reject all Bids if it determines, in its sole discretion, that the public interest will be best served by doing so.

h. A Pre-award Conference may be conducted with the apparent low Bidder(s) to review general requirements of the Bidding Documents.

30. AWARD CRITERIA

Award will be made after evaluating the prices, responsiveness and responsibility of each Bidder.

A. The **responsiveness** of a Bidder is determined by the following:

1. A timely and effective delivery of all services, materials, documents, and/or other information required by the Commission;
2. The completeness of all material, documents and/or information required by the Commission; and
3. The notification of the Commission of methods, services, supplies and/or equipment that could reduce cost or increase quality.

B. The **responsibility** of a Bidder is determined by the following:

1. The ability, capacity and skill of the Bidder to perform the Agreement or provide the Work required;
2. The capability of the Bidder to perform the Agreement or provide the Work promptly, or within the time specified without delay or interference;
3. The character, integrity, reputation, judgment, experience and efficiency of the Bidder. Required experience in order for the Bidder to be deemed responsible must include completion of at least two potable water treatment plant projects, with a construction cost equal to or greater than $10 million, in the past ten years.
4. The quality of performance of previous contracts or work;
5. The previous existing compliance by the Bidder with laws and ordinances relating to the Agreement or Work;
6. The sufficiency of the financial resources and ability of the Bidder to perform Agreement or provide the Work;

7. The compliance of the Bidder with the requirements of Division II, Equal Employment Opportunity (EEO), and Division 12, Minority and Female Business Enterprises, of the City's Department of Procurement;
8. The quality, availability and adaptability of the supplies or contractual Work to the particular use required; and
9. The successful Bidder shall assume full responsibility for the conduct of his agents and/or employees during the time such agents or employees are on the premises for the purpose of performing the Work herein specified
10. City's evaluation of financial information concerning a Bidder and its consideration of such information in determining whether a Bidder is responsive and responsible may involve a review of several items of information required to be included in a Bid. City will review the information included in Form 7; Company Financial Statements attached to this ITB and any additional information required on that form to be included in a Bid. Further, if this ITB requires the provision of a Payment Bond and/or Performance Bond if a Contract is awarded, City will review the information included in Form 3; Proof of Insurance and Bonding Capacity. A Bidder must include with that form (a) notarize letter(s) from its proposed insurer(s) and surety(ies) indicating that the financial capacity of the Bidder is such that the insurer(s)/surety(ies) is/are willing to issue insurance and Payment and Performance Bonds for the Bidder if a Contract is awarded to it. Further, if this ITB requires a successful Bidder that is awarded a Contract pursuant to this procurement to post some other type of performance guarantee (e.g. letter of credit, guaranty agreement, etc.), a Bidder must submit with its Bid a notarized letter from an appropriate financial institution (e.g. bank) indicating that it is willing to issue such performance guarantee for the Bidder if a Contract is awarded to it.

31. SURETY BONDS

Regarding submission of surety bonds prior to or subsequent to the Bid submission, the following requirements pertain:

a. Any surety bond submitted in accordance with the Bid or Agreement requirements must be issued by a corporate surety company satisfactory to the Commission and authorized to act as such in the State of Georgia;

b. Such bonds shall conform to the forms provided with the Bid Documents and be completed in accordance with the instructions thereon; and

c. In accordance with Georgia law, and upon award of the Agreement, separate performance and payment bonds shall be required of the successful Bidder, each in an amount not less than the total amount payable under the Agreement. The performance bond shall remain in effect for one (1) year after final acceptance of the Work or the guaranty period under the Agreement, whichever is the larger.

The payment bond shall remain in effect for the period required under Georgia law for the payment bonds on public construction agreements. Reference is made to the bond forms and the Agreement Documents for additional particulars of the terms required in the bonds. In the case of any inconsistency between the Bond Forms and Georgia law, the law shall control. Alterations, extension of the time allowed for performance, extra and additional Work, and other changes authorized under the Agreement may be made without notice to or consent of the surety or sureties.

32. POWER OF ATTORNEY

Attorneys-in-fact who sign agreement bonds must file with each bond a certified copy of their power of attorney with the appropriate effective date.

33. INSURANCE REQUIREMENTS

The Contractor shall procure and maintain during the life of this Agreement, Workmen's Compensation, Public Liability, Property Damage, Automobile Liability insurance and any other insurance necessary to satisfy the requirements of the Agreement Documents.

34. LAWS AND REGULATIONS

The Bidder's attention is directed to the fact that all applicable state laws, municipal ordinances, and the rules and regulations of all authorities having jurisdiction over construction of the project shall apply to the Agreement throughout, to the extent that such requirements do not conflict with federal laws or regulations, and they will be deemed to be included in the Agreement the same as though therein written out in full.

Bidder's attention is directed to the following laws and regulations:

a. INTENTIONALLY DELETED;

b. Applicable provisions of the Occupational Safety and Health Act ("**OSHA**") must be observed during Work under this Agreement; and

c. Appendix A – Requirements of the Office of Contract Compliance.

35. AGREEMENT TERMS

The term of the Agreement shall be for a period of six hundred forty calendar days, or as may be amended under the Agreement to comprise the Agreement Time. Contractor shall commence the Work within ten calendar days after receipt of Notice to Proceed and shall substantially complete the Work within six hundred ten (610) calendar days from issuance of the Notice to Proceed and finally complete the Work within six hundred forty calendar (640) days of issuance of the Notice to Proceed.

36. LIQUIDATED DAMAGES

The performance of the Work under Agreement within the specified time is essential to the Commission's economic interests. The attention of potential Bidders is directed to the provisions of the Agreement Documents, which establish the basis for liquidated damages to be paid to the Commission in the event that the Work is not completed on schedule**.**

37. EXECUTION OF AGREEMENT (REQUIRED SUBMITTAL)

Each Bidder shall execute six copies of its portion of the Commission-Contractor Agreement and submit such with its Bid. Subsequent to the award and within fifteen (15) days after the prescribed forms are presented for signature, the successful Bidder shall execute and deliver to the Commission six copies of the performance and payment bonds and insurance certificates. The failure of a Bidder to execute six copies of the Commission-Contractor Agreement and submit such with the Bid may cause the Bid to be deemed nonresponsive. The failure of the successful Bidder to supply the required bonds within fifteen (15) days after the prescribed forms are presented for signature, or within such extended period as the Commission may grant, based upon reasons determined sufficient by the Commission, shall constitute a default, and the Bidder shall forfeit the Bid Guarantee and the Commission may either award the Agreement to the next lowest responsive Bidder or re-advertise for Bids, and may proceed against the bid guarantee of the defaulted Bidder. If a more favorable Bid is

received by re-advertising, the defaulting Bidder shall have no claim against the Commission for a refund.

38. POST AWARD CONFERENCE

A pre-construction conference may be held with the successful Bidder and all known Subcontractors at a time and place set by the Commission.

39. SUBSTITUTIONS

See Special Conditions Article SC-28.

40. PERMITS, EASEMENTS AND RIGHTS-OF-WAY

A. All permits which hare the responsibility of the Commission have been obtained.

B. All easements which are the responsibility of the Commission have been obtained.

C. All rights-of-way which are the responsibility of the Commission have been obtained.

41. PROVISION OF SUBCONTRACTING DATA

Any Proponent awarded a contract pursuant to this procurement shall comply with Chapter 2, Article X, Division 1, Section 2-1296 of the Code of Ordinances of the City of Atlanta by submitting, on an annual basis, information on its use of all subcontractors within the prior calendar year. By way of example, this information shall first be required to be provided on a form prescribed by the Chief Procurement Officer by March 31, 2011 (for the 2010 calendar year).

END OF INSTRUCTIONS TO BIDDERS

DRAFT

COMMISSION-CONTRACTOR AGREEMENT

DRAFT COMMISSION - CONTRACTOR AGREEMENT
FC- 5076
ATLANTA FULTON COUNTY WATER TREATMENT PLANT
BULK HYPOCHLORITE SYSTEM AND FILTER/PLATE SETTLER IMPROVEMENTS

STATE OF GEORGIA
COUNTY OF FULTON

THIS AGREEMENT for **FC- 5076 Atlanta Fulton County Water Treatment Plant Bulk Hypochlorite System and Filter/Plate Settler Improvements**, is made and entered into this the _____ day of _____ 2010, by and between the Atlanta-Fulton County Water Resources Commission, (hereinafter the "**Commission**") a joint venture partnership between the City of Atlanta, a municipal corporation of the State of Georgia, (hereinafter the "**City**") and Fulton County, a political subdivision of the State of Georgia (hereinafter the "**County**") and _____ (hereinafter the "**Contractor**").

W I T N E S S E T H:

WHEREAS, the Commission desires to engage Contractor to perform all Work required by the Contract Documents for **FC-5076 Atlanta-Fulton County Water Treatment Plant Bulk Hypochlorite System and Filter/Plate Settler Improvements** (the "**Project**"); and

WHEREAS, Contractor has the necessary personnel and facilities to perform the Work; and

WHEREAS, this Agreement is authorized by the City, pursuant to Resolution No. ____, adopted by the City Council of the City on the _____day of _____, 200___, and approved by the Mayor on _____, attached hereto, marked "Exhibit A" and made a part hereof by reference;;

WHERES, this Agreement was authorized by the County, pursuant to Resolution No. _____, adopted and approved by the Fulton County Board of Commissioners on ____, attached hereto as Exhibit A-1;

WHEREAS, the Board of Commissioners for the Atlanta-Fulton County Water Resources Commission recommended approval of this Agreement on ____; and

WHEREAS, the Commission desires to enter into this Agreement with Contractor for the performance of all Work associated with the Project in accordance with the terms and conditions herein.

NOW, THEREFORE, for and in consideration of the mutual Agreement among the parties hereinafter, and for other good and valuable consideration, the parties hereto do agree as follows:

1.

The Commission hereby engages Contractor to perform, and Contractor agrees to perform for the Commission, all Work required by the Agreement Documents relative to the Project. Contractor shall commence the Work within ten (10) calendar days after receipt of Notice to Proceed and shall substantially complete within the time stated in the Bid Solicitation.

2.

a) Contractor represents that it has, or will secure at its own expenses, all personnel required to perform all Work to be completed under this Agreement;

b) All the Work required hereunder will be performed by Contractor or under the direct supervision of Contractor. All personnel engaged in the Work by Contractor shall be fully qualified and shall be authorized or permitted under applicable State and local law to perform such Work;

c) None of the Work or services covered by this Agreement shall be transferred, assigned, or subcontracted by Contractor without the prior written consent of the Commission. The Commission agrees that it shall not unreasonably withhold its consent to Contractor subcontracting portions of the Work. Contractor agrees, however, that it shall not assign or subcontract this Contract, in whole or in part, without the consent of the Commission and that any attempted assignment or subcontracting of this Agreement without the Commission's consent shall be void. Contractor further agrees that it will not make any material change in the ownership of its organization or constituent parts without the written consent of the Commission. Material for purposes of this paragraph shall refer to the transfer or sale of ten percent (10%) or more of the ownership interest in Contractor's organization. In the event that Contractor proposes any material change in its ownership, Contractor agrees to provide the Commission with adequate assurances of future performance, including its surety's consent to the terms of any change in ownership.

3.

The Agreement Documents relative to this Agreement consist of:

This Commission-Contractor Agreement;

Appendix A - Equal Business Opportunity Program:
- Policy Statement;
- Equal Business Opportunity (EBO) M/FBE Availability;
- Equal Business Opportunity Program Reminders;
- Covenant of Non-discrimination (EBO-1);
- Subcontractor Contact Form (EBO-2);
- Equal Business Opportunity Subcontractor Project Plan (EBO-3)
- First Source Jobs Information (Form-4);
- First Source Jobs Agreement (Form-5)

Appendix B: Insurance and Bonding Requirements;
Appendix C: Contractor's Questionnaire and Disclosure Form;
Appendix D: Local Bidder Preference Program
Exhibit A and A-1: Legislation;
Exhibit B: Required Submittals:
- Authorization to Transact Business;
- Bid Guarantee;
- Bid Documentation - Certifications;
- Bid Form;
- Statement of Bidders Qualifications;
- Affidavit;

Exhibit C: Contractor's Georgia Utility License Certificate;
Exhibit D: Georgia Security and Immigration Compliance Act of 2006 Affidavits;
Exhibit E: Performance and Payment Bonds;
Exhibit F: Addenda;
General Conditions (GC);
Special Conditions (SC);
Technical Specifications;
Plans and Drawings;
Any Additional Instructions and Detailed Drawings (as defined in the General Conditions, GC-2);
Modifications (including without limitation Change Orders or Change Directives) issued after execution of this Agreement; and
Approved Complete Network Schedule and Approved Revisions Thereto.

These collectively form the Agreement, and are all as fully a part of the Agreement as if attached to this Agreement or repeated herein.

These collectively form the Agreement, and are all as fully a part of the Agreement as if attached to this Agreement or repeated herein.

4.

All reports, information, data, or other documents, given to, prepared by or assembled by Contractor under this Agreement shall be kept confidential and shall not be made available

to any individual or organization by Contractor without the prior written approval of the Commission.

5.

The Commission may, from time to time, request changes in the Scope of Work to be performed by Contractor hereunder. No such change, including any increase or decrease in the amount of the compensation or the Agreement Time, which may be mutually agreed upon by and between the Commission and Contractor, shall be effective and enforceable unless a **written** change order or **written** Construction Change Directive modifying this Agreement has been issued in accordance with GC-41.

6.

Contractor warrants that it has not employed or retained any company or person, other than a bona fide employee working for Contractor to solicit or secure this Agreement; and that it has not paid or agreed to pay any person, company, association, corporation, individual or firm, other than a bona fide employee working for Contractor any fee, commission, percentage, gift, or any other consideration contingent upon or resulting from the award or making of this Agreement. For the breach or violation of the above warranty and upon a finding after notice and hearing, the Commission shall have the right to terminate this Agreement without liability and, at its discretion, to deduct from the Agreement price or otherwise recover, the full amount of such fee, commission, percentage, gift or consideration.

7.

During the performance of this Agreement, Contractor agrees to comply with all provisions of Part 2, Chapter 2, Article X, Division 11, including Section 2-1441 of the Code of Ordinances ("**Ordinance**"), City of Atlanta, as may be amended through the term of this Agreement.

8.

During the performance of this Agreement, Contractor agrees to comply with Part 2, Chapter 2, Article X, Division 12, including Sections 2-1441 through 2-1460 of the Code of Ordinances of the City of Atlanta, the Equal Business Opportunity, as may be amended throughout the Term of this Agreement ("**EBO**") Program and Appendix A.

9.

The Commission agrees to pay Contractor for the Work performed pursuant to this Agreement on an as needed basis per the prices as stated in the Pricing Sheet, hereinafter attached in Exhibit B for amount not to exceed _____ Dollars.

10.

Contractor shall commence the Work within ten (10) calendar days after receipt of Notice to Proceed and shall substantially complete the Work within six hundred forty (640) calendar days from issuance of the Notice to Proceed and fully complete the Work within six hundred ten (610) calendar days of issuance of the Notice to Proceed, except as may be amended by the Commission in accordance with GC-26 which comprises the Agreement Time, as defined herein. It is understood and agreed that the Commission will sustain substantial monetary and other injury and damages, including, but not limited to, increased costs, expenses and liabilities in the event of failure by the Contractor to perform its Work in accordance with the Contract. Accordingly, should the Contractor not complete the Work, or any such portion thereof, within the days required under this Section, then charges shall be assessed against any money due or that may become due the Contractor in accordance with the following schedule:

Substantial Completion: $1,000.00 per day
Final Completion: $500.00 per day

11.

Contractor, by the execution of this Agreement, acknowledges that it is possessed of that degree of care, learning, skill, and ability which is ordinarily possessed by other members of its profession and further contracts that in the performance of the duties herein set forth, it will exercise such degree of care, learning, skill and ability as is ordinarily employed by Contractor under similar conditions and like circumstances and shall perform such duties without neglect.

12.

Contractor agrees to obtain and maintain during the entire term of this Agreement all of the insurance called for in the Agreement Documents, with the Commission, City and County as an additional insured in each policy of public liability and property damage insurance, and shall furnish to the Commission a certificate of insurance showing required coverage. The cancellation of any policy of insurance required by this Agreement shall meet the requirements of notice under the laws of the State of Georgia as presently set forth in the Georgia Code.

13.

In addition to its agreement to obtain and maintain the insurance as set forth herein above, the Contractor agrees that to the fullest extent permitted by law, the Contractor shall at his sole cost and expense indemnify, defend, satisfy all judgments and hold harmless the Commission, City, County, the Designer, the Engineer, and their agents and employees from and against all claims, damages, actions, judgments, costs, penalties, liabilities,

losses and expenses, including, but not limited to, attorneys' fees arising out of or resulting from the performance of the Work, provided that any such claim, damage, action, judgment, cost, penalty, liability, loss or expense (1) is attributable to bodily injury, sickness, disease or death, or to injury to or destruction of tangible property (other than the Work itself) including the loss of use resulting there from; and (2) is caused in whole or in part by any act or omission of the Contractor, any Subcontractor, anyone directly or indirectly employed by any of them or anyone for whose acts any of them may be liable, regardless of whether or not it is caused in part by a party indemnified hereunder. Such obligation shall not be construed to negate, abridge or otherwise reduce any other right or obligation of indemnity which would otherwise exist as to any party or person described in Appendix B, Insurance and Bonding Requirements.

In any and all claims against the Commission, City, County, the Engineer or any of their agents or employees by any employee of the Contractor, any subcontractor, anyone directly or indirectly employed by any of them or anyone for whose acts any of them may be liable, the indemnification obligation in Appendix B, Insurance and Bonding Requirements, shall not be limited in any way, including, but not limited by, the limits of the liability insurance required under this Agreement and the Agreement Documents, nor limited by any limitation on the amount or type of damages, compensation or benefits payable by or for the Contractor or any Subcontractor under workers' or workmens' compensation acts, disability benefit acts or other employee benefit acts.

14.

Except as provided by GC-7, the Contractor shall obtain, at its own expense, all permits and licenses required by all municipal, state and federal authorities now in force, or which may hereafter be in force, pertaining to the performance of the work called for by this Agreement. The Agreement Documents, including this Agreement, constitute the entire and integrated Agreement between the Commission and the Contractor and may be amended only by written instrument approved by both parties. The parties agree that this Agreement shall not become binding on the Commission, and the Commission shall incur no liability upon the same, until this Agreement has been executed by the Mayor, officially sealed by the Municipal Clerk; executed by the Chair of the Fulton County Board of Commissioners, sealed by the County Clerk; and delivered to Contractor.

15.

The Georgia Security and Immigration Compliance Act of 2006 pursuant to O.C.G.A. § 13-10-91 and Georgia Department of Labor Rule 300-10-1-02 is effective as of July 1, 2007, and applies to contracts for services which are physically performed with a public entity. The Contractor is required to submit the attached Georgia Security and Immigration Compliance Act of 2006 Required Contractor Submittal, the Contractor Affidavit and the Subcontractor Affidavits as shown in Exhibit D. Contractor's failure to comply with this requirement shall constitute a material default in the contract, which may result in termination of this Original Agreement.

IN WITNESS WHEREOF, the Commission and Contractor have executed this Agreement by their duly authorized officers, as of the date first above written.

ATLANTA FULTON COUNTY WATER RESOURCES COMMISSION

By: _____

_____
(print):
Chairperson, Board of Commissioners
Atlanta-Fulton County Water
Resources Commission

By: _____

_____
(print)
General Manager

CITY OF ATLANTA

By: _____
Mayor

ATTEST:

_____
Municipal Clerk (SEAL)

RECOMMENDED:

_____
Robert J. Hunter
Commissioner, Department of
Watershed Management

APPROVED:

_____
Chief Procurement Officer

APPROVED AS TO FORM:

_____
City Attorney

FULTON COUNTY

By: _____
Chairman, Board of Commissioners

ATTEST:

_____
Clerk, Board of Commissioners (SEAL)

RECOMMENDED:

_____
Angela Parker
Director
Department of Public Works

APPROVED AS TO FORM:

_____
County Attorney

CONTRACTOR: [insert name] _____

[if corporation]

	ATTEST
By: _____	_____
_____	_____
(name printed/title)	**(name printed) (affix seal)** **Corporate Secretary/Assistant Secretary**
	ATTEST
By: _____	_____
_____	_____
(name printed/title)	**(name printed) (affix seal)** **Corporate Secretary/Assistant Secretary**

[if Limited Liability Corporation]

BY: [print managing member or authorized officer]_____
TITLE:

_____
(print name of individual signing):
Title:

Notary Public:

_____(seal)
My commission expires:

APPENDIX A

OFFICE OF CONTRACT COMPLIANCE

CITY OF ATLANTA

Kasim Reed
Mayor

SUITE 1700
55 TRINITY AVENUE, SW
ATLANTA, GA 30303
(404) 330-6010 Fax: (404) 658-7359
Internet Home Page: www.atlantaga.gov

OFFICE OF CONTRACT COMPLIANCE
Hubert Owens
Director
howens@atlantaga.gov

MEMORANDUM

TO: Adam L. Smith, Chief Procurement Officer
Department of Procurement

FROM: Hubert Owens
Mayor's Office of Contract Compliance

RE: **SBE Bid Documents for Project No.: FC-5076, Bulk Hypochlorite System and Filter/Plate Settler Improvements**

DATE: March 4, 2010

The SBE bid documents with project specific availability for Project No.: **FC-5076, Bulk Hypochlorite System and Filter/Plate Settler Improvements** are enclosed.

The entire OCC package, which includes the project specific availability for the above referenced contract, must be included in the bid documents. Please note that the enclosed package is solely for this project.

If there are questions, please contact me at (404) 330-6010, or **Bruce T. Bell** at (404) 330-**0000.**

cc: File
Keith Brooks, DOP

CITY OF ATLANTA

Kasim Reed
Mayor

SUITE 1700
55 TRINITY AVENUE, SW
ATLANTA, GA 30303
(404) 330-6010 Fax: (404) 658-7359
Internet Home Page: www.atlantaga.gov

OFFICE OF
CONTRACT COMPLIANCE
Hubert Owens
Director
howens@atlantaga.gov

March 3, 2010

RE: Project No.: 5076, Bulk Hypochlorite System and Filter/Plate Settler Improvements

Dear Prospective City of Atlanta Bidder:

The Office of Contract Compliance information is an integral part of every City of Atlanta bid. All Bidders are required to make efforts to demonstrate compliance with the program requirements at or prior to the time of Bid opening, or upon request by OCC. Bidders are required to ensure that prospective subcontractors, vendors, suppliers and other potential participants are not denied opportunities to compete for work on a City contract and afford all firms, including Small Business Enterprises (SBE) opportunities to participate in the performance of the business of the City to the extent of their availability, capacity and willingness to compete. Please read all of the information very carefully. Pay close attention to the specific SBE goals for this project and the SBE program reminders listed on page 7.

Additionally, as the City of Atlanta is developing its Small Business Enterprise database, bidders will be allowed to submit the names of companies that meet the size standards of the United States Small Business Administration Guidelines. [see 13 C.F.R. § 121.201 (and further explained in 13 C.F.R. §§ 121.104 through 121.107)]. These requirements may be accessed via the internet by visiting: http://ecfr.gpoaccess.gov/ and choosing "Title 13- Business and Credit" from the browse-able drop down field.

If you have any questions about the information included in this section of the solicitation, please contact the City of Atlanta Office of Contract Compliance at (404) 330-6010.

The City of Atlanta looks forward to the opportunity to do business with your company.

Table of Contents

Policy Statement 1

Implementation of EBO Policy 2

Determination of Good Faith Efforts During Bid Process 2

OCC Review of Bidder Submissions 3

Small Business Enterprise Program Bid/RFP Submittals 4

Monitoring of SBE Policy 4

Implementation of EEO Policy 4

Monitoring of EEO Policy 4

First Source Jobs Program Policy Statement 5

Small Business Enterprise Goals for this Project 6

Small Business Enterprise Program Reminders 7

Covenant of Non-Discrimination (SBE1) 8

Subcontractor Contact Form (SBE2) ..... 9 - 10

Subcontractor Utilization Form (SBE3) 11

First Source Job Information (Form 4) 12

First Source Jobs Agreement (Form 5) 13

CITY OF ATLANTA

SMALL BUSINESS ENTERPRISE

POLICY STATEMENT

It is the policy of the City of Atlanta to promote full and equal business opportunity for all persons doing business with the City. The City must ensure that firms seeking to participate in contracting and procurement activities with the City are not prevented from doing so on the basis of size as it relates to revenue and number of employees. The purpose of the Small Business Enterprise Program is to ensure that the City of Atlanta has a robust race-neutral approach to promoting full and equal business opportunity for all persons doing business with the City of Atlanta, to promote commerce by assisting SBEs to actively participate in the City's procurement process, and ensure that the City of Atlanta utilizes programs that provide it with the best possible resources. SBE Goals for this project are set forth on page 6.

Implementation of SBE Policy

The Office of Contract Compliance will review information submitted by Bidders pertaining to efforts to promote opportunities for small businesses to compete for business as prime contractors, subcontractors and/or Suppliers. A Bidder is eligible for award of a City contract upon a finding by OCC that the Bidder has utilized good faith efforts to attract all businesses regardless of size. To assist prime contractors in this effort, the Office of Contract Compliance has set forth in this solicitation document the SBE goals within the relevant NAICS Codes, for this Project.

For subcontracting, the SBE Project Participation Plan must include all subcontractors to be utilized on the project, detail the services to be performed, the dollar value of the work to be performed by each subcontractor, and the *City of Atlanta* SBE or other acceptable certification number, and supplier id number.

For Suppliers, the Subcontractor Project Plan must include all suppliers to be utilized on the project, the supplies to be provided, including the dollar value of the supplies being provided and the *City of Atlanta* SBE or other acceptable certification number, and supplier id number

Determination of Good Faith Efforts During Bid Process

No Bidder shall be awarded a contract on an Eligible Project unless the Office of Contract Compliance determines that the Bidder has satisfied the requirement of section 2-1372 on such Eligible Project. Accordingly, each Bidder shall submit with each Bid the following:

1. Covenant of Non Discrimination. Each Bidder shall submit with her/his Bid a Covenant of Non-Discrimination which is set forth herein as Exhibit SBE1.

2. Outreach Efforts Documentation. Each Bidder shall submit with her/his Bid written documentation demonstrating the Bidder's outreach efforts to identify, contact, contract with, or utilize businesses, including certified SBEs, as subcontractors or Suppliers on the Eligible Project. This information shall be set forth on Exhibit SBE2, which is included herein.

3. SBE Project Participation Plan. Each Bidder shall submit with her/his Bid a completed and signed SBE Project Participation Plan, which is included herein as Exhibit SBE3, which lists the name, address, telephone number and contact person of each subcontractor or other business to be used during the contract, the NAICS Code and the type of work or service each business will perform, the dollar value of the work and the scope of work, certification number of each business, and any other information requested by the Office of Contract Compliance. In order for the Office of Contract Compliance to officially consider a firm to be an SBE firm, it must be certified by or have a certification application pending with the Office of Contract Compliance at the time of the Bid.

OCC Review of Bidder Submissions

The Office of Contract Compliance shall determine whether a Bidder has satisfied the good faith efforts requirement of section 2-1372 based on its review of the Covenant of Non Discrimination, the Outreach Efforts Documentation, the SBE Project Participation Plan, and its review of other relevant facts and circumstances. In reviewing the documents submitted by a Bidder to determine whether the Bidder has satisfied the good faith outreach practices requirement of this section, the Office of Contract Compliance will consider, among other things, the total project dollars subcontracted to or expended for services performed by other businesses, including certified SBEs, whether such businesses perform Commercially Useful Functions in the work of the contract based upon standard industry trade practices, whether any amounts paid to Supplier businesses are for goods customarily and ordinarily used based upon standard industry trade practices, and the availability of certified SBEs within the relevant NAICS Codes for such Eligible Project.

To determine whether a competitor that has failed to meet SBE goals may be awarded the contract, the city will determine whether the efforts the bidder made to obtain SBE participation were "good faith efforts." Efforts that are merely pro forma are not "good faith efforts" to meet the goals. In order to award a contract to a bidder that has failed to meet SBE contract goals, the Office of Contract Compliance will determine whether the bidder actively and aggressively made efforts to meet the City's SBE goals. A bidder making a good faith effort would consider a number of factors in negotiating with subcontractors, including SBE subcontractors, and would take a firm's price and capabilities as well as contract goals into consideration. However, the fact that there may be some additional costs involved in finding and using SBEs is not in itself sufficient reason for a bidder's failure to meet the contract SBE goal, as long as such costs are reasonable. Also, the ability or desire of a prime contractor to perform the work of a contract with its own organization does not relieve the bidder of the responsibility to make good faith efforts. Prime contractors are not, however, required to accept higher quotes from SBEs if the price difference is excessive or unreasonable. In determining whether a bidder has made good faith efforts, the Office of Contract Compliance will take into account the performance of other bidders in meeting the contract. For example, when the apparent successful bidder fails to meet the contract goal, but others meet it, the Office of Contract Compliance may reasonably raise the question of whether, with additional reasonable efforts, the apparent successful bidder could have met the goal. If the apparent successful bidder fails to meet the goal but meets or exceeds the average SBE participation obtained by other bidders, the City may view this, in conjunction with other factors, as evidence of the apparent successful bidder having made good faith efforts. Competitors that fail to meet SBE goals and fail to demonstrate "good faith efforts" shall be deemed non-responsive to the city's SBE requirements and shall not be eligible to be awarded the contract.

Small Business Enterprise Program Bid/RFP Submittals

The Covenant of Non Discrimination, the Outreach Efforts Documentation, the SBE Project Participation Plan, and any other information required by OCC in the solicitation document must be completed in their entirety by each Proponent and submitted with the other required Bid/RFP documents in order for the Bid/RFP to be considered responsive. Failure to timely submit these forms, fully completed, will result in the Bid/RFP being considered as non-responsive, and therefore, excluded from consideration.

Monitoring Of SBE Policy

Upon execution of a contract with the City of Atlanta, the successful bidder's SBE Project Participation Plan will become a part of the contract between the bidder and the City of Atlanta. The SBE Project Participation Plan will be monitored by the City of Atlanta's Office of Contract Compliance for adherence with the plan. The successful bidder will be required to provide specific information on a monthly basis that demonstrates the use of subcontractors and suppliers as indicated on the SBE Project Participation Plan. The failure of the successful bidder to provide the specific information by the specified date each month shall be sufficient cause for the City to evoke penalties as set forth in the City of Atlanta Code of Ordinances, Section 2-1373.

Implementation of EEO Policy

The City effectuates its EEO policy by adopting racial and gender work force availability for every contractor performing work for the City of Atlanta. These percentages are derived from the work force demographics set forth in the 2000 Census EEO file prepared by the United States Department of Commerce for the applicable labor pool normally utilized for the contract.

Monitoring of EEO Policy

Upon award of a contract with the City of Atlanta, the successful bidder must submit a Contract Employment Report (CER), describing the racial and gender make-up of the firm's work force. If the CER indicates that the firm's demographic composition does not meet the adopted EEO goals, the firm will be required to submit an affirmative action plan setting forth the steps to be taken to reach the adopted goals. The CER and the affirmative action plan, if necessary, will become a part of the contract between the successful bidder and the City of Atlanta. Compliance with the EEO requirements will be monitored by the Office of Contract Compliance.

First Source Jobs Program Policy Statement

It is the policy of the City of Atlanta to provide job opportunities to the residents of the City of Atlanta, whenever possible. Every contract with the City of Atlanta creates a potential pool of new employment opportunities. The prime contractor is expected to work with the First Source Jobs Program to fill at least 50% of all new entry-level jobs, which arise from this project, with residents of the City of Atlanta. For more specific information about the First Source Jobs Program contact:

Deborah Lum
Manager, One Stop Services
First Source Jobs Program
Atlanta Workforce Development Agency
818 Pollard Boulevard
Atlanta, GA 30315
(404) 658-6312

Small Business Enterprise Goals for this Project

Project No.: FC-5076, Bulk Hypochlorite System and Filter/Plate Settler Improvements

The Small Business Enterprise goals for the trade categories listed in this project are:

25.00% SBE

Please be reminded that no Bidder shall be awarded a contract on an Eligible Project unless the Office of Contract Compliance determines that the Bidder has satisfied the good faith efforts requirement of section 2-1372 on such Eligible Project. Details of the OCC review process for determination of non-discrimination are detailed on pages 2 and 3 of this document.

Small Business Enterprise Program Reminders

1. Subcontractor Certification. It is the prime contractor's responsibility to verify that SBEs included on their SBE Project Participation Plans are certified with the City of Atlanta's Office of Contract Compliance by filing with OCC a self-certification form or a letter or other documentation from the United States Small Business Administration that establishes that the firm qualifies as an 8(a) firm or HUBZone firm.

2. Reporting. The successful bidder must submit monthly SBE participation reports to the Office of Contract Compliance.

3. Subcontractor Contact Form. It is required that bidders list and submit information on all subcontractors they solicit for quotes, all subcontractors who contact them with regard to the project, and all subcontractors they have discussions with regarding the project. Failure to provide complete information on this form will result in your bid being declared non-responsive.

4. SBE Ordinance. The SBE Program is governed by the provisions of the SBE Ordinance set forth in the City of Atlanta Code Division 9 section 2 - 1356 through 2 -1377. The ordinance can be obtained from the City of Atlanta Clerk's Office at (404) 330-6032.

5. Supplier Participation. In order to receive full SBE credit, suppliers must manufacture or warehouse the materials, supplies, or equipment being supplied for use on the Eligible Project.

COVENANT OF NON-DISCRIMINATION

The undersigned understands that it is the policy of the City of Atlanta to promote full and equal business opportunity for all persons doing business with the City of Atlanta. The undersigned covenants that we have not discriminated, on the basis of a firm's revenue or employee size with regard to prime contracting, subcontracting or partnering opportunities. The undersigned further covenants that we have completed truthfully and fully the required forms SBE-2 and SBE-3. Set forth below is the signature of an officer of the bidding entity with the authority to bind the entity.

_____
Signature of Attesting Party

_____
Title of Attesting Party

On this _____ day of _____, 20___, before me appeared _____, the person who signed the above covenant in my presence.

_____
Notary Public

Seal

FORM SBE-1

OFFICE OF CONTRACT COMPLIANCE

SUBCONTRACTOR CONTACT FORM

List all subcontractors or suppliers(SBE and Non-SBE) that were contacted regarding this project

Name of Sub-Contractor/ Supplier	City Of Atlanta Supplier ID Number	Company Name, Contact Name, Address and Phone Number	City Of Atlanta Business License? *(Yes or No)*	Type of Work Solicited for	Business Ownership *(See Code below)*	Certification No. and Expiration Date	Results of Contact

Name of Sub-contractor/ Supplier	City Of Atlanta Supplier ID Number	Company Name, Contact Name, Address and Phone Number	City Of Atlanta Business License? (Yes or No)	Type of Work Solicited for	Business Ownership (see code below)	Certification No. and Expiration Date	Results of Contact

Proponent's Name: _____ **Project Name:** _____ **FC#:** _____

Signature: _____ **Contact No:** _____ **Date:** _____

SMALL BUSINESS ENTERPRISE PROJECT PARTICIPATION PLAN
SUBCONTRACTOR/SUPPLIER UTILIZATION

List **all** subcontractors and suppliers, including lower tiers, to be used on this project.

Name of Sub-contractor/ Supplier	City Of Atlanta Supplier ID Number	Company Name, Address and Phone Number	City Of Atlanta Business License? (yes or no)	NIAC Code	Type of Work to be Performed	Is Business a Small Business Enterprise? (yes or no)	Certificati No. and Expiratior Date

Total SBE% _____
Total Subcontractor% _____

Proponent's Co. Name: _____ **Date:** _____ **FC#:** _____

Proponent's Contact Number:_____ **Project Name:**_____

Signature: _____ _____

Form SBE-3

First Source Job Information

Company Name: _____

FC No.: _____

Project Name: _____

The following entry level positions will become available as a result of the above referenced contract with the City of Atlanta.

1.

2.

3.

4.

5.

Include a job description and all required qualifications for each position listed above.

Identify a company representative and contact phone number who will be responsible for coordinating with the First Source Jobs Program.

Company Representative: _____

Phone Number: _____

FORM 4

First Source Jobs Agreement

THIS AGREEMENT REGARDING THE USE OF THE FIRST SOURCE JOBS PROGRAM BY CONTRACTORS WITH THE CITY OF ATLANTA TO FILL ENTRY LEVEL JOBS is made and entered into by _____

This_____ day of_____, 201__.

The City of Atlanta requires the immediate beneficiary or primary contractor for every eligible project to enter into a First Source Jobs employment agreement. The contractor agrees to the following terms and conditions:

- The first source for finding employees to fill all entry level jobs Created by the eligible project will be the First Source Program.
- The contractor will make every effort to fill 50% of the entry level jobs created by this eligible project with applicants from the First Source Program.
- The contractor shall make good faith effort to reach the goal of this employment agreement.
- Details as to the number and description of each entry level job must me provided with the bid.
- The contractor shall comply with the spirit of the First Source Jobs Policy beyond the duration of this agreement and continue to make good faith attempts to hire employees of similar backgrounds to those participating in the First Source Program.
- The contractor as a condition of transfer, assignment or otherwise shall require the transferee to agree in writing to the terms of the employment Agreement.

Upon a determination that a beneficiary or contractor has failed to comply with the terms of this Agreement, the City may impose the following penalties based on the severity of the non-compliance:

- The City of Atlanta may withhold payment from the contractor.
- The City of Atlanta may withhold 10 percent of all future payments on the contract until the contractor is in compliance
- The City of Atlanta may refuse all future bids on city projects or applications for financials assistance in any form from the City until the contractor demonstrated that the First Source requirements have been met, or cancellation of the eligible project.
- The City of Atlanta may cancel the eligible project.

All terms stated herein can be found in the City of Atlanta Code of Ordinances Sections 5-8002 through 5-8005.

The undersigned hereby agrees to the terms and conditions set forth in this agreement.

_____

Contractor

APPENDIX B

INSURANCE and BONDING

APPENDIX B
INSURANCE & BONDING REQUIREMENTS
FC-5076 Bulk Hypochlorite System and Filter/Plate Settler Improvements

A. Preamble

The following requirements apply to all work under the agreement. Compliance is required by all Contractors/Consultants. **To the extent permitted by applicable law, the City of Atlanta ("City") reserves the right to adjust or waive any insurance or bonding requirements contained in this Appendix B and applicable to the agreement.**

1. Evidence of Insurance Required Before Work Begins

No work under the agreement may be commenced until all insurance and bonding requirements contained in this Appendix B, or required by applicable law, have been complied with and evidence of such compliance satisfactory to City as to form and content has been filed with City. Contractor/Consultant must provide City with a Certificate of Insurance that clearly and unconditionally indicates that Contractor/Consultant has complied with all insurance and bonding requirements set forth in this Appendix B and applicable to the agreement. The firm named in the contract as the **Prime Contractor/Consultant must also be listed on the certificate of insurance as the Insured.** In accordance with the solicitation documents applicable to the agreement at the time Contractor/Consultant submits to City its executed agreement, Contractor/Consultant must satisfy all insurance and bonding requirements required by this Appendix B and applicable by law, and provide the required written documentation to City evidencing such compliance. In the event that Contractor/Consultant does not comply with such submittal requirements within the time period established by the solicitation documents applicable to the agreement, City may, in addition to any other rights City may have under the solicitation documents applicable to the agreement or under applicable law, make a claim against any bid security provided by Contractor/Consultant.

2. Minimum Financial Security Requirements

All companies providing insurance required by this Appendix B must meet certain minimum financial security requirements. These requirements must conform to the ratings published by A.M. Best & Co. in the current Best's Key Rating Guide - Property-Casualty. The ratings for each company must be indicated on the documentation provided by Contractor/Consultant to City certifying that all insurance and bonding requirements set forth in this Appendix B and applicable to the agreement have been unconditionally satisfied.

For all agreements, regardless of size, companies providing insurance or bonds under the agreement must meet the following requirements:

i) Best's Rating not less than A-,
ii) Best's Financial Size Category not less than Class IX, and
iii) Companies must be authorized to conduct and transact insurance contracts by the Insurance Commissioner, State of Georgia.

iv) All bid, performance and payment bonds must be underwritten by a U.S. Treasury Circular 570 listed company.

If the issuing company does not meet these minimum requirements, or for any other reason is or becomes unsatisfactory to City, City will notify Contractor/Consultant in writing. Contractor/Consultant must promptly obtain a new policy or bond issued by an insurer acceptable to City and submit to City evidence of its compliance with these conditions.

Contractor/Consultant's failure to comply with all insurance and bonding requirements set forth in this Appendix B and applicable to the agreement will not relieve Contractor/Consultant from any liability under the agreement. Contractor/Consultant's obligations to comply with all insurance and bonding requirements set forth in Appendix B and applicable to the agreement will not be construed to conflict with or limit Contractor/Consultant's/Consultant's indemnification obligations under the agreement.

3. Insurance Required for Duration of Contract

All insurance and bonds required by this Appendix B must be maintained during the entire term of the agreement, including any renewal or extension terms, and until all work has been completed to the satisfaction of City.

4. Notices of Cancellation & Renewal

Contractor/Consultant must, notify the City of Atlanta in writing at the address listed below by mail, hand-delivery or facsimile transmission, within 2 days of any notices received from any insurance carriers providing insurance coverage under this Agreement and Appendix B that concern the proposed cancellation, or termination of coverage.

68 Mitchell St. Suite 9100
Atlanta, GA 30303
Facsimile No. (404) 658-7450

Confirmation of any mailed notices must be evidenced by return receipts of registered or certified mail.

Contractor/Consultant shall provide the City with evidence of required insurance prior to the commencement of this agreement, and, thereafter, with a certificate evidencing renewals or changes to required policies of insurance at least fifteen (15) days prior to the expiration of previously provided certificates.

5. Certificate Holder

The **City of Atlanta** must be named as certificate holder. All notices must be mailed to the attention of **Risk Management** at **68 Mitchell Street, Suite, 9100, Atlanta, Georgia 30303.**

6. Project Number & Name

The project number and name must be referenced in the description section of the insurance certificate.

7. Additional Insured Endorsements – Form CG 20 10 (11/85) or its equivalent

The City must be covered as Additional Insured under all insurance (except worker's compensation and professional liability) required by this Appendix B and such insurance must be primary with respect to the Additional Insured. Additional Insured language must read **"In compliance with the contract requirements, certificate holder is an additional insured under the policy."** Confirmation of this must unconditionally appear on any **Certificate of Insurance** provided by Contractor/Consultant as evidence of its compliance with this Appendix B. **Contractor/Consultant must also submit to City an Additional Insured Endorsement (Form CG 20 10 (11/85) or its equivalent) evidencing City's rights as an Additional Insured for each policy of insurance under which it is required to be an additional insured pursuant to this Appendix B. Endorsement must not exclude the Additional Insured from Products - Completed Operations coverage. The City shall not have liability for any premiums charged for such coverage.**

8. Mandatory Sub-Contractor/Consultant Compliance

Contractor/Consultant must require and ensure that all subContractor/Consultants/subconsultants at all tiers to be sufficiently insured/bonded.

9. Self Insured Retentions, Deductibles or Similar Obligations

Any self insured retention, deductible or similar obligation will be the sole responsibility of the contractor.

10. Task Order (if applicable)

Evidence of compliance with insurance requirements must be provided on a Task Order basis prior to the issuance of any Notice to Proceed.

B. Workers' Compensation and Employer's Liability Insurance

Contractor/Consultant must procure and maintain Workers' Compensation and Employer's Liability Insurance in the following limits to cover each employee who is or may be engaged in work under the agreement. :

Workers' Compensation. . . . . **Statutory**
Employer's Liability:
Bodily Injury by Accident/Disease **$1,000,000 each accident**
Bodily Injury by Accident/Disease **$1,000,000 each employee**
Bodily Injury by Accident/Disease **$1,000,000 policy limit**

C. Commercial General Liability Insurance

Contractor/Consultant must procure and maintain Commercial General Liability Insurance on form (CG 00 00 01 or equivalent) in an amount not less than **$1,000,000 per occurrence subject to a $2,000,000 aggregate**. The following indicated extensions of coverage must be provided:

- ☒ Contractual Liability
- ☒ Broad Form Property Damage
- ☒ Premises Operations
- ☒ Personal Injury
- ☒ Advertising Injury
- ☒ Fire Legal Liability
- ☒ Medical Expense
- ☒ Independent Contractor/Consultants/SubContractor/Consultants
- ☒ Products – Completed Operations
- ☒ X.C.U. Liability
- ☒ Additional Insured Endorsement* (primary& non-contributing in favor of the City of Atlanta)
- ☒ Waiver of Subrogation in favor of the City of Atlanta

D. Commercial Automobile Liability Insurance

Contractor/Consultant must procure and maintain Automobile Liability Insurance in an amount not less than **$1,000,000** Bodily Injury and Property Damage combined single limit. The following indicated extensions of coverage must be provided:

- ☒ Owned, Non-owned & Hired Vehicles
- ☒ Waiver of Subrogation in favor of the City of Atlanta

If Contractor/Consultant does not own any automobiles in the corporate name, non-owned vehicle coverage will apply and must be endorsed on either Contractor/Consultant's personal automobile policy or the Commercial General Liability coverage required under this Appendix B.

E. Excess or Umbrella Liability Insurance

Contractor/Consultant shall procure and maintain a policy providing Excess or Umbrella Liability Insurance which is at least as broad as the underlying policy. This insurance, which shall be maintained throughout the life of the contract, shall be in an amount of not less than **$10,000,000 per occurrence** and will be excess over workers compensation/employers liability, general liability and auto liability.

- ☒ Coverage must follow form with primary policy
- ☒ May be used to achieve minimum general and auto liability limits
- ☒ Coverage must be as broad as primary policy

F. Builders Risk / Installation Floater

Contractor/Consultant shall procure and maintain policy for Builders Risk/ Installation Floater with all risk coverage to cover damage or destruction to renovations,

repairs or equipment being installed or otherwise being handled or stored by the Contractor, including off-site storage, transit and installation. The coverage must be in an amount equal to **100 percent of the value of the contract**. The following indicated extensions of coverage must be provided:

- ☒ All Risk Coverage
- ☒ Operational Testing Coverage included
- ☒ Loss Payee Endorsement

G. Property Coverage/Inland Marine

Contractor/Consultant shall procure and maintain all risk property coverage in an amount equal to replacement value for all equipment, furniture, fixtures, machinery and/ or personal property.

H. Professional Liability Insurance

Contractor/Consultant shall procure and maintain during the life of this contract Professional Liability Insurance in an amount of **$5,000,000** per occurrence and annual aggregate. The policy will fully address the Contractor/Consultant's professional services associated with the scope of work contained in this document. The policy will include at least a three year Extended Reporting Provision.

I. Pollution Liability

Contractor/Consultant must procure and maintain Pollution Liability Insurance in an amount not less than **$5,000,000** each occurrence/aggregate. Completed operations coverage shall remain in effect for no less than three (3) years after final completion. This coverage can also be satisfied with an endorsement to the General Liability policy.

J. Performance and Payment Bond

Contractor/Consultant shall furnish a Payment Bond and Performance Bond to the City in an amount equal to **100 percent of the total contract value** and for the duration of the entire term.

The person executing the Bonds on behalf of the surety shall file with the Bonds a general power of attorney unlimited as to amount and type of bonds covered by such power of attorney, and certified by an official of said surety.

APPENDIX C

CONTRACTOR'S DISCLOSURE FORM AND QUESTIONNAIRE

CONTRACTOR'S DISCLOSURE FORM AND QUESTIONNAIRE

1. Please provide the names and business addresses of each of the Contractor's officers, director's, affiliates and other employees, agents or representative of this form, the subject project, **FC-5076, Atlanta Fulton County Water Treatment Plant Bulk Hypochlorite System and Filter/Plate Settler Improvements**

   For the purposes of this form, the term "affiliate" of any Contractor shall mean any person or entity which directly or indirectly controls or is controlled by, or is under common control with such Contractor. "Control" means the possession, directly or indirectly, of the power to direct or cause the direction of the management and policies of a person or entity, whether through ownership of voting securities, by entreat, or otherwise.

   Describe accurately, fully and completely, their respective relationships with said Contractor, including their ownership interests and their anticipated role in the management and operations of said Contractor.

2. Please describe the general development of said Contractor's business during the past five (5) years, or such shorter period of time that said Contractor has been in business.

3. Please state whether any of the following events have occurred in the last five (5) years with respect to said Contractor. If any answer is yes, explain fully the following:

   (a) Whether a petition under the federal bankruptcy laws or state insolvency laws was filed by or against said Contractor, or a receiver fiscal agent or similar officer was appointed by a court for the business or property of said Contractor;

   (b) Whether Contractor was subject of any order, judgment, or decree not subsequently reversed, suspended or vacated by any court of competent jurisdiction, permanently enjoining said Contractor from engaging in any type of business practice, or otherwise eliminating any type of business practice; and

   (c) Whether said Contractor's business was the subject of any civil or criminal proceeding in which there was a final adjudication adverse to said Contractor which directly arose from activities conducted by the business unit or corporate division of said Contractor which submitted a bid or proposal for the subject project, if so please explain.

4. Please state whether any employee, agent or representative of said Contractor who is or will be directly involved in the subject project has or had within the last five (5) years; (i) directly or indirectly had a business relationship with the City, the County or the Commission, (ii) directly or indirectly received revenues from the City, County or Commission or (iii) directly or indirectly receives revenues from the result of conducting business on City, County or Commission property or pursuant to any contract with the City, County or Commission. Please describe any such relationship.

5. Please state whether any employee, agent or representative of said Contractor who is or will be directly involved in the subject project has or had within the last five (5) years a direct or indirect business relationship (to the best of your knowledge and belief) with any elected or appointed City, County or Commission official or with any City, County or Commission employee, and fully describe such business relationship.

NOTE: If any response to any question set forth in this questionnaire has been disclosed in any other document, a response may be made by attaching a copy of such disclosure. (For example, said Contractor's most recent filings with the Securities and Exchange Commission (SEC) may be provided if they are responsive to certain items within the questionnaire). However, for purposes of clarity, Contractor should correlate its responses with the exhibits by identifying the exhibit and its relevant text.

Disclosures must specifically address, completely respond and comply with all information requested and fully answer all questions requested by the Commission. Such disclosure must be submitted at the time of the bid or proposal submission and included as a part of the bid/proposal submitted for this project. Disclosure is required for Contractors, joint venture partners and first-tier Subcontractors and/or Sub-consultants.

Failure to provide required disclosure, submit officially signed and notarized documents or respond to any and all information requested/required by the Commission can result in the bid/proposal declared as non-responsive. This document must be completed and included as a part of the bid/proposal package along with other required documents.

Under penalty or perjury, I declare that I have examined this questionnaire and all attachments hereto, if applicable, to the best of my knowledge and belief, and all statements contained hereto are true, correct, and complete.

On this _____ day of _____, 20___

_____
(Legal Name of Bidder)

_____
(Signature of Authorized Representative)

_____
(Title)

_____
(Date)

Sworn to and subscribed before me,

this _____ day of_____, 20____

_____
(Notary Public) (Seal)

Commission Expires _____
(Date)

APPENDIX D

LOCAL BIDDER PREFERENCE PROGRAM

(REQUIRED SUBMITTAL-WHEN BIDDER DESIRES TO RECEIVE BID PREFERENCE ON THIS PROJECT)

Table of Contents

Statement of Policy…….…….2

Certification as a Local Bidder……...3

Criteria to be Certified as a Local Bidder…….4

Term of Certification……...…….5

CITY OF ATLANTA
LOCAL BIDDER PREFERENCE PROGRAM

STATEMENT OF POLICY

For the construction of the project FC-5076, Atlanta Fulton County Water Treatment Plant Bulk Hypochlorite System and Filter/Plate Settler Improvements, the Commission is implementing the City of Atlanta's Local Bidder Preference Program.

The City of Atlanta (the "**City**") has a significant interest in encouraging the creation of employment opportunities for its residents and for businesses located within the City. As a purchaser of goods and services, the City will benefit from expanded job and business opportunities for its residents and businesses through additional revenues generated by its activities. It is in the interest of the City and its residents to give preference on Eligible Local Projects to those Eligible Bidders, as defined in Section 2-1443, who have direct physical and economic relationships with the City.

CERTIFICATION AS A LOCAL BIDDER

Only an approved Eligible Bidder certified by the Office of Contract Compliance may be certified as a Local Bidder. In order to be certified as a Local Bidder, an Eligible Bidder must submit a completed application to the Department of Procurement ("**DOP**"), and the applicant must be approved and certified by the DOP.

An Eligible Bidder must submit a completed and signed written application to become a Local Bidder before it will be allowed to receive a bid preference on an Eligible Local Project. In order to be approved as a Local Bidder and receive a bid preference on an Eligible Local Project, the application for approval as a Local Bidder and all supporting documents must be received by the DOP **no later than thirty (30) calendar days prior to the date the bids are received** on such Eligible Local Project. An Eligible Bidder who fails to submit an application for approval as a Local Bidder within thirty (30) calendar days prior to the date bids are received on an Eligible Local Project, and who otherwise meets the requirements for approval as a Local Bidder, shall be approved as a Local Bidder and receive a bid preference on such future Eligible Local Projects for which the date bids are received is at least thirty (30) calendar days after the date such application is received.

CRITERIA TO BE CERTIFIED AS A LOCAL BIDDER

To be certified as a Local Bidder, the Eligible Bidder must satisfy no less than two of the following criteria:

1. Verify that the Eligible Bidder's principal place of business is located in the City or that the Eligible Bidder has held a valid City business license for at least one (1) year prior to the date of the application.

2. Verify that a majority of the full time employees, chief officers, and managers of the Eligible Bidder have regularly conducted work and business in the City for at least one (1) year prior to the date of application.

3. Verify that a majority of the employees based at the Eligible Bidder's location(s) in the City have been residents of the City for at least one (1) year prior to the date of application.

4. Provide references or other means of verification acceptable to the DOP that the services the Eligible Bidder offers to the City have been provided by the Eligible Bidder in the City for at least one (1) year prior to the date of application. If the applicant is a Joint Venture or Mentor-Protégé team, each participant in the Joint Venture or Mentor-Protégé team must be approved independently as a Local Bidder in order for the Joint Venture or Mentor-Protégé team to receive the bid preference on Eligible Local Projects.

The application provides instructions for required supporting documentation that Bidder must submit with the application for the criteria listed above.

TERM OF CERTIFICATION

The certification as a Local Bidder shall expire two (2) years from the date of the approval of the application. Following the expiration date, a business is no longer a Local Bidder. An Eligible Bidder must submit a new application for certification as a Local Bidder to the DOP and establish that it continues to meet the requirements contained in 2-1188.1(d) in order to receive the bid preference on Eligible Local Projects.

Eligible Bidders certified as Local Bidders shall be under a continuing duty to immediately inform the DOP in writing of any changes in the Eligible Bidder's business if, as a result of such changes, the Eligible Bidder no longer satisfies the requirements contained in 2-1188.1(d).

EXHIBIT A

LEGISLATION

(TO BE PROVIDED AFTER BIDDING)

EXHIBIT B

REQUIRED SUBMITTALS

AUTHORIZATION TO TRANSACT BUSINESS

If the successful Bidder is a corporation or corporations combined to form a joint venture, before the Agreement is executed, the corporation or the members of the joint venture team must submit documentary evidence from the Secretary of State that the corporation is in good standing and that the corporation is authorized to transact business in the State of Georgia. The Commission reserves the right to request this evidence anytime during the procurement process.

BID BOND

STATE OF GEORGIA
COUNTY OF FULTON

KNOW ALL MEN BY THESE PRESENTS, that we, _____, as Principal, and _____, as Surety, are held and firmly bound unto the Atlanta Fulton County Water Resources Commission in the sum _____ Dollars ($_____) lawful money of the United States of America, for the payment of which sum will and truly to be made, we bind ourselves, our heirs, personal representatives, successors and assigns, jointly and severally, firmly by these presents.

WHEREAS, the Principal was submitted to the Owner a Bid for **FC-5076 Atlanta-Fulton County Water Treatment Plant Bulk Hypochlorite System and Filter/Plate Settler Improvements**

NOW, THEREFORE, the conditions of this obligation are such that if the Bid be accepted, the Principal shall, within ten (10) days after receipt of conformed Agreement Documents, execute a Agreement in accordance with the Bid upon the terms, conditions and prices set forth therein, and in the form and manner required by the Agreement Documents and execute sufficient and satisfactory separate Performance and Payment Bonds payable to the Owner, then this amount of five percent (5%) of the total Base Bid amount in form satisfactory to the Owner, then this obligation shall be void; otherwise, it shall be and remain in full force and effect in law; and the Surety shall, upon failure of the Principal to comply with any or all of the foregoing requirements within the time specified above, immediately pay to the aforesaid Owner, upon demand, the amount hereof in good and lawful money of the United States of America, not as a penalty, but as liquidated damages.

This bond is given pursuant to and in accordance with the provision of O.C.G.A. Section 36-91-1 *et. Seq.* And all the provisions of the law referring to this character of bond as set forth in said Sections or as many be hereinafter enacted and these are hereby made a part hereof to the same extent as if set out herein in full.

IN WITNESS WHEREOF, the said Principal has hereunder affixed its signature and seal, and said Surety has hereunto caused to be affixed its corporate signature and seal, by its duly authorized officers, on this _____ day of _____, 20___.

FC-5076 Atlanta-Fulton County Water Treatment Plant Bulk Hypochlorite System and Filter/Plate Settler Improvements

CONTRACTOR – PRINCIPAL: _____

By: _____
(name signed)

_____
(name printed or typed)

Title: _____

Address: _____

_____

Attest: _____
(name signed)

_____
(name printed or typed)

Title: _____
(SEAL)

SURETY: _____

By: _____
(name signed)

_____
(name printed or typed)

Title: _____

Address: _____

_____

Witness: _____
(name signed)

_____
(name printed or typed)

Title: _____
(SEAL)

BID GUARANTEE

BID BOND OF SURETY MAY BE USED

SUBMIT POWER OF ATTORNEY FROM AGENT

BID DOCUMENTATION

FC-5076
Atlanta-Fulton County Water Treatment Plant
Bulk Hypochlorite System and Filter/Plate Settler Improvements

--Certification—

THE UNDERSIGNED HEREBY CERTIFIES THAT THE BID DOCUMENTATION CONTAINED HERIN CONSTITUTES ALL THE INFORMATION USED IN PREPARATION OF THE BID AND THAT I HAVE PERSONALLY EXAMINED THESE CONTENTS AND HAVE FOUND THAT THIS BID DOCUMENTATION IS COMPLETE.

BY: _____

TITLE: _____

FIRM: _____

ADDRESS: _____

_____

TELEPHONE NO. _____

FAX NO. _____

DATE: _____

BID FORM

FC-5076 Atlanta-Fulton County Water Treatment Plant
Bulk Hypochlorite System and Filter/Plate Settler Improvements

TO: The Atlanta Fulton County Water Resources Commission

Submitted: _____, 20___

The undersigned, as Bidder, hereby declares that the only person or persons interested in this Bid, as principal or principals, is or are named herein and that no other person, than herein mentioned has any interest in this Bid or in the Agreement to be entered into, that this Bid is made without connection with any other person, company or parities making a Bid or proposal; and that it is in all respects fair and in good faith without collusion or fraud.

The Bidder further declares that he has examined the Site of Work and fully informed himself in regard to all conditions pertaining to the place where the Work is to be done; that he has examined the Agreement Documents for the Work furnished prior to the opening of Bids; and that he has satisfied himself relative to the Work to be performed.

The Bidder proposes and agrees, if this Bid is accepted, to contract with the Commission, in the form of Agreement specified, to furnish all necessary Materials, Equipment, means of transportation and labor necessary, and to complete this Project in full and complete accordance with the shown, noted, described and reasonably intended requirements of the Agreement Document to the full and entire satisfaction of the Commission, and with a definite understanding that no money will be allowed for extra work except as set forth in the Agreement Document.

Bidder hereby agrees to commence Work under this Agreement on or before a date to be specified in the written “Notice to Proceed” from the Commission.

The undersigned acknowledges receipt of addenda numbered _____ through _____.

In accordance with the above understanding, the undersigned proposes to do all of the Work, furnish all of the Materials, and complete the Work in accordance with the Agreement Documents for the Total Bid.

* * * BASE BID * * *

ITEM 1 – Furnishing all products, materials and equipment and performing all labor necessary to complete and put into operation the Bulk Hypochlorite System and Filter/Plate Settler Improvements, including all work shown on the Drawing and/or specified and not included in Items 2 through 4 below, nor the Alternates, the amount of: _____

_____

_____ DOLLARS ($_____).

Item No.	Description	Estimated Qty.	Unit	Unit Price	Total Price
2.	Brand Name Specification Products				
a.	Water Filters and Appurtenances	Allowance			$1,007,646.00
3.	Cash Allowances				
a.	Soils and Concrete Testing	Allowance			$10,000.00
b.	Construction Verification Surveying	Allowance			$5,000.00
c.	Unforeseen Work Elements	Allowance			$500,000.00
* * * ADDITIONAL WORK IF ORDERED BY THE ENGINEER * * *					
4.	Removal of Unsuitable Material and Replacement with				
a.	Crushed Stone	50	C.Y.	$	$
b.	Suitable Earth Material	50	C.Y.	$	$

BASE BID TOTAL, ITEMS 1 THROUGH 4, INCLUSIVE, THE AMOUNT OF _____

_____

_____ DOLLARS ($_____).

***** ALTERNATE NO. 1 *****

ADD, FOR REPLACING ALL MATERIAL IN SPECIFICATION SECTION 11325 SPECIFIED AS AISI 304 STAINLESS STEEL WITH AISI 316 STAINLESS STEEL THE AMOUNT OF: _____

_____

_____ DOLLARS ($_____).

***** ALTERNATE NO. 2 *****

ADD, FOR FURNISHING ALL PRODUCTS, MATERIALS AND EQUIPMENT AND PERFORMING ALL LABOR NECESSARY TO FURNISH AND INSTALL THE 24-INCH DIP AND BUTTERFLY VALVE IN FLOCCULATION-SETTLING BASIN NO. 1 AS SHOWN ON THE DRAWINGS THE AMOUNT OF: _____

_____

_____ DOLLARS ($_____).

***** ALTERNATE NO. 3 *****

ADD/DEDUCT (CIRCLE ONE), FOR FURNISHING ALL PRODUCTS, MATERIALS AND EQUIPMENT AND PERFORMING ALL LABOR NECESSARY TO FURNISH AND INSTALL THE PERESTALTIC TYPE TUBE PUMP EQUIPMENT SPECIFIED IN SECTION 11215 MANUFACTURED BY MASTERFLEX IN LIEU OF WATSON-MARLOW BREDEL THE AMOUNT OF: _____

_____

_____ DOLLARS ($_____).

BID DATA

The Bidder shall designate below the one manufacturer for each product to be furnished and installed if awarded the work with the understanding that no changes or substitutions will be considered for these manufacturers unless directed by the Owner. The Bidder understands that if this information is not provided, offering products meeting all specification requirements and having the approval of the Engineer, then the Owner reserves the right either to determine the Bidder non-responsive and reject the Bid or to designate the manufacturer of the products to be provided which will meet all specification requirements, which Owner-designated manufacturer products must be furnished by the Bidder at no increase in the Contract Price.

1. Product: PERISTALTIC TYPE TUBE PUMPS
   Manufacturer: _____

2. Product: MAGNETICALLY-COUPLED CHEMICAL PUMP
   Manufacturer: _____

3. Product: THERMOPLASTIC VERTICAL SUMP PUMP
   Manufacturer: _____

4. Product: INCLINED PLATE SETTLERS
   Manufacturer: _____

5. Product: FIBERGLASS STORAGE TANKS
   Manufacturer: _____

6. Product: FILTER MEDIA
   Manufacturer: _____

STATEMENT OF BIDDER'S QUALIFICATIONS

This Statement is to accompany Bids submitted for the following project:
Atlanta-Fulton County Water Treatment Plant
Bulk Hypochlorite System and Filter/Plate Settler Improvements

1. NAME OF BIDDER: _____

2. BUSINESS ADDRESS: _____

   _____

3. TELEPHONE NUMBER: _____

4. FASCIMILE NUMBER: _____

5. OFFICIAL REPRESENTATIVE AND TITLE: _____

The undersigned hereby authorizes and requests any person, firm, or corporation to furnish any information requested by the Owner in verification of the recitals comprising this Statement of Bidder's Qualifications.

I, _____, certify that I am _____ of the Bidder, and that the answers to the following questions and statements contained therein are true and correct.

Sworn to and subscribed
Before me this _____day
Of _____,
20____.

_____
Notary Public

Date: _____

Firm Name: _____
_____

By: _____

Title: _____

All questions must be answered and the data given must be clear and comprehensive. This statement must be notarized. If necessary, questions may be answered on separate attached sheets. The Bidder may submit any additional information desired. Attach all additional sheets to this statement. (Sample "Project Information Form" contained at the end of this Section.)

1. When organized: _____

2. If a Corporation, where incorporated: _____

3. How many years have you been engaged in the contracting business under your present
firm or trade name? _____

4. Contracts on hand. (Complete a "Project Information Form", for each Contract on hand.)

5. General description of type of work performed by your company: _____
_____

6. Have you ever failed to complete any work awarded to you? If so, where and why? _
_____

7. Have you ever defaulted on a contract? If so, where and why? _____
_____

8. Attach a list of the most important projects recently completed by your company which are similar in scope to this Project. (Complete a "Project Information Form", for each Project listed.)

9. Names, background and experience of the principal members of your organization, including officers:

Name	Position	Years Experience

Project Information Form

Project Title: _____

Project Description: _____
_____
_____
_____

Project Owner:

- Owner Name: _____
- Contact Person: _____
- Phone Number: _____

Engineer/Construction Manager:

- Company Name: _____
- Contact Person: _____
- Phone Number: _____

Contract Amount:

- Initial: _____
- Final: _____

Contract Time

- Initial: _____
- Final: _____
- Completion Date: _____

AFFIDAVIT

STATE OF GEORGIA
COUNTY OF FULTON

Personally appeared before the undersigned, _____
who on oath, says that he/she is _____
and, in such capacity, is authorized to sign this Affidavit, and says on oath that, has submitted to the Commission Bid or offer to do the following Work under Agreement, to-wit:

FC-5076
Atlanta-Fulton County Water Treatment Plant
Bulk Hypochlorite System and Filter/Plate Settler Improvements

Affiant states upon oath that _____, has not, by itself or with others, directly or indirectly, entered into any combination, arrangement or scheme, whatsoever, with any other Bidder to increase the price of said Work, or to offer a different sum from its Bids; and Affiant further states that _____, has entered into no arrangement, expressed or implied, to induce others not to bid, or to do any by-bidding.

Affiant further states that the said Bid of _____
is bona fide, and that has gone to any furnisher or supplies and attempted to get such person or company to furnish the materials to _____only, or if furnished any other Bidder, that the material shall be at a higher price.

_____
(COMPANY NAME)

_____
(PRESIDENT/VICE PRESIDENT)

Sworn to and subscribed before me,

this ___ day of _____,20___.

Notary Public County: _____
(Secretary)

My Commission expires:
_____.

INSURANCE COVERAGE AND BONDING CAPACITY
Atlanta Fulton County Water Resources Commission

FC-5076
Atlanta-Fulton County Water Treatment Plant
Bulk Hypochlorite System and Filter/Plate Settler Improvements

The Bidder shall provide the Commission with satisfactory evidence of the Bidder's ability to obtain the required insurance and bonds from (a) company (ies) satisfactory to the Commission and licensed by the Insurance Commissioners of the State of Georgia to transact Surety business in the State of Georgia. Bidder shall submit this form with bid.

SURETY:

COMPANY NAME: _____

COMPANY ADDRESS: _____

_____

CONTACT NAME AND PHONE: _____

BONDING CAPACITY IS: _____

AVAILABLE (uncommitted) BONDING CAPACITY IS: _____

INSURER: _____

COMPANY NAME: _____

COMPANY ADDRESS: _____

_____

CONTACT NAME AND PHONE: _____

_____
COMPANY NAME

_____
PRESIDENT/VICE PRESIDENT

Sworn to and subscribed before me this ____ day of _____, 20___ .

_____
SECRETARY/ASSISTANT SECRETARY
(affix corporate seal, here if a corporation)

NON-COLLUSION AFFIDAVIT

Personally appeared before the undersigned, _____who, on oath, says that (s)he is and, in such capacity, is authorized to sign this Affidavit, and says on oath, that , (s)he has submitted to the Atlanta-Fulton County Water Resources Commission a Bid or offer to do the following work under Contract, to wit:

PROJECT: FC-5076, Atlanta Fulton County Water Treatment Plant Bulk Hypochlorite System Filter/Plate Settler Improvements

Affiant states upon oath that _____ has not, by itself or with others, directly or indirectly, entered into any combination, arrangement or scheme, whatsoever, with any other Bidder to increase the price of said work, or to offer a different sum from its Bids; and Affiant further states that _____ has not entered into any arrangement, expressed or implied, to induce others not to propose, or to do any by-bidding.

Affiant further states that pursuant to O.C.G.A. Section 36-91-21 (d) and (e), has not, by itself or with others, directly or indirectly, prevented or attempted to prevent competition in such proposals by any means whatsoever. Affiant further states that (s)he has not prevented or endeavored to prevent anyone from summation or offer on the project by any means whatever, nor has Affiant caused or induced another to withdraw a Bid or offer for the work.

Affiant further states that the said offer of _____ is bona fide, and that no one has gone to any supplier and attempted to get such person or company to furnish the materials to the Bidder only, or if furnished to any other Bidder, that the material shall be at a higher price.

Date: _____, 20__.

Corporate Bidder:
[Insert Corporate Name]

_____
By:_____
Name:_____
Title:_____

_____
Corporate Secretary/Assistant Secretary (Seal)

Non-Corporate Bidder:
[Insert Bidder Name]

_____
By:_____
Name:_____
Title:_____

_____
Notary Public (Seal)

My Commission Expires:_____

NOTE:

IF THE BIDDER IS A PARTNERSHIP OR JOINT VENTURE, ALL OF THE PARTNERS/JOINT VENTURERS AND ANY OFFICER, AGENT, OR OTHER PERSON WHO MAY HAVE REPRESENTED OR ACTED FOR THEM IN THE PREPARATION OF THE BID FOR OR PROCURING THE CONTRACT SHALL ALSO MAKE THIS OATH.

IF THE BIDDER IS A CORPORATION, ALL OFFICERS, AGENTS, OR OTHER PERSONS WHO MAY HAVE ACTED FOR OR REPRESENTED THE CORPORATION IN THE PREPARATION OF THE BID FOR OR PROCURING THE CONTRACT SHALL MAKE THE OATH.

Bidder Financial Statements and Other Financial Information

Note: If a general partnership or a joint venture is proposed, all member companies are to respond separately to all questions, completing separate Forms to be included in the ITB.

ALL FIGURES IN U.S. DOLLARS (US$)

1. Summary of assets and liabilities on basis of the audited financial statement of the last three financial years.

Standard currency of Company's Financial Statement: . . . . . .

The exchange rate used: ..... = US $.....

	Year ____ (million)	Year ____ (million)	Year ____ (million)
Current Assets	US$.....	US$.....	US$.....
Current Liabilities	US$.....	US$.....	US$.....
Working Capital	US$.....	US$.....	US$.....
Total Assets	US$.....	US$.....	US$.....
Total Liabilities	US$.....	US$.....	US$.....
Net-Worth	US$.....	US$.....	US$.....

The above figures are to be prepared and attested to by a Certified Public Accountant

---

2. Total value of the balance of work in hand:

US $.....

3. Value of available credit for the Project from reputable local Banks or foreign bank verified by local banks.

Name of Bank, Address, Telephone and Fax numbers	Amount (US$)
.....	.....
.....	.....
.....	.....
.....	.....
.....	.....
Total	**.....**

---

4. Amounts of manufacturing and/or construction work for the last five years.

Year ___ (Million)	Year ___ (Million)	Year (Million)	Year ____ (Million)	Year ____ (Million)
US$.....	US$.....	US$.....	US$.....	US$.....

---

5. (a) Please attach copies of the Company's most recent (3) three-years audited financial statements certified by a Certified Public Accountant, licensed accountant and other financial data which you consider to be useful. Proponents should demonstrate financial capability by providing the following documentation for each member of the proponent's team:

   Annual reports and financial statements including income statements, balance sheets, and changes in financial position.

   The latest quarterly financial report and a description of any material changes in financial position since the last annual report.

   Providing banking or other institutional lenders references, and provide any other information that the Proponent may deem appropriate to reflect its financial capability.

   (b) Please attach the statement from the banks confirming the Company's credit lines available for the Project.

   (c) Proponents are required to submit hard copies of all of the above financial conditions.

EXHIBIT C

GEORGIA UTILITY CONTRACTOR’S LICENSE

\

GEORGIA UTILITY CONTRACTOR'S LICENSE CERTIFICATION

FC-5076, Atlanta Fulton County Water Treatment Plant Bulk Hypochlorite System Filter/Plate Settler Improvements

Contractor's Name: _____

Utility Contractor's License Number: _____

Expiration Date of License: _____

FC Number and Project Name: **FC-5076, Invitation To Bid For Atlanta Fulton County Water Treatment Plant Bulk Hypochlorite System Filter/Plate Settler Improvements**

EXHIBIT D

GEORGIA SECURITY AND IMMIGRATION COMPLIANCE ACT OF 2006

_____ COUNTY }
}
STATE OF _____ }

CONTRACTOR AFFIDAVIT AND AGREEMENT

COMES NOW before me, the undersigned officer duly authorized to administer oaths, the undersigned contractor, who, after being duly sworn, states as follows:

1.

By executing this affidavit, the undersigned contractor verifies its compliance with O.C.G.A. § 13-10-91 and Georgia Department of Labor Rule 300-10-1-.02, stating affirmatively that the individual, firm, or corporation which is contracting with the City of Atlanta has registered with and is authorized to participate in a federal work authorization program* in accordance with the applicability provisions and deadlines established in O.C.G.A. § 13-10-91 and Georgia Department of Labor Rule 300-10-1-.02.

2.

The undersigned contractor is using and will continue to use the federal work authorization program throughout the contract period.

3.

The undersigned contractor further agrees that, should it employ or contract with any subcontractor(s) in connection with the physical performance of services pursuant to the contract with the City of Atlanta of which this affidavit is a part, the undersigned contractor will secure from such subcontractor(s) similar verification of compliance with O.C.G.A. § 13-10-91 and Georgia Department of Labor Rule 300-10-1-.02 through the subcontractor's execution of the subcontractor affidavit required by Georgia Department of Labor Rule 300-10-1-.08 or a substantially similar subcontractor affidavit. The

undersigned contractor further agrees to maintain records of such compliance and provide a copy of each such verification to the City of Atlanta at the time the subcontractor(s) is retained to perform such service.

_____ _____
E-Verify Program User Identification Number Date of Authorization

FURTHER AFFIANT SAYETH NOT.

_____ _____
BY: Authorized Officer or Agent Date

_____
Contractor Name

_____
Title of Authorized Officer or Agent of Contractor

_____
Printed Name of Authorized Officer or Agent

Sworn to and subscribed before me
This ____ day of _____, 20__

_____
Notary Public

My commission expires: _____

* Any of the electronic verification of work authorization programs operated by the United States Department of Homeland Security or any equivalent federal work authorization program operated by the United States Department of Homeland Security to verify information of newly hired employees, pursuant to the Immigration Reform and Control Act of 1986 (IRCA), P.L. 99-603. As of the effective date of O.C.G.A. § 13-10-91, the applicable federal work authorization program is the "EEV / Basic Pilot Program" operated by the U.S. Citizenship and Immigration Services Bureau of the U.S. Department of Homeland Security, in conjunction with the Social Security Administration (SSA).

_____ COUNTY **}**
} **SUBCONTRACTOR AFFIDAVIT**
STATE OF GEORGIA **}**

COMES NOW before me, the undersigned officer duly authorized to administer oaths, the undersigned subcontractor, who, after being duly sworn, states as follows:

By executing this affidavit, the undersigned subcontractor verifies its compliance with O.C.G.A. § 13-10-91 and Georgia Department of Labor Rule 300-10-1-.02, stating affirmatively that the individual, firm, or corporation which is engaged in the physical performance of services under a contract with _____ (name of contractor) on behalf of the City of Atlanta has registered with and is participating in a federal work authorization program* in accordance with the applicability provisions and deadlines established in O.C.G.A. § 13-10-91 and Georgia Department of Labor Rule 300-10-1-.02.

_____
EEV / Basic Pilot Program User Identification Number

FURTHER AFFIANT SAYETH NOT.

_____ _____
BY: Authorized Officer or Agent Date

_____
Subcontractor Name

_____
Title of Authorized Officer or Agent of Subcontractor

_____
Printed Name of Authorized Officer or Agent

Sworn to and subscribed before me
This ____ day of _____, 20__

_____
Notary Public
My commission expires: _____

* Any of the electronic verification of work authorization programs operated by the United States Department of Homeland Security or any equivalent federal work authorization program operated by the United States Department of Homeland Security to verify information of newly hired employees, pursuant to the Immigration Reform and Control Act of 1986 (IRCA), P.L. 99-603. As of the effective date of O.C.G.A. § 13-10-91, the applicable federal work authorization program is the "EEV / Basic Pilot Program" operated by the U.S. Citizenship and Immigration Services Bureau of the U.S. Department of Homeland Security, in conjunction with the Social Security Administration (SSA).

GEORGIA SECURITY AND IMMIGRATION COMPLIANCE ACT OF 2006
Required Contract Submittal

CONTRACT NO. FC-5076, ATLANTA FULTON COUNTY WATER TREATMENT PLANT BULK HYPOCHLORITE SYSTEM FILTER/PLATE SETTLER IMPROVEMENTS

CONTRACTOR: _____

Effective July 1, 2007, the following language is required to be included in all contracts entered into by the City of Atlanta (hereinafter "City") for the physical performance of services within this State:

A. Pursuant to the Georgia Security and Immigration Compliance Act of 2006, the Contractor understands and agrees that compliance with the requirements of O.C.G.A. § 13-10-91 and Georgia Department of Labor Rule 300-10-1-.02 are conditions of this Agreement. The Contractor further agrees that such compliance shall be attested by the Contractor through execution of the contractor affidavit required by Georgia Department of Labor Rule 300-10-1-.07, or a substantially similar contractor affidavit. The Contractor's fully executed affidavit is attached hereto as Exhibit ___ and is incorporated into this Agreement by reference herein.

B. By initialing in the appropriate line below, the Contractor certifies that the following employee-number category as identified in O.C.G.A. § 13-10-91 is applicable to the Contractor:

1. _____ 500 or more employees;
2. _____ 100 or more employees;
3. _____ Fewer than 100 employees.

C. The Contractor understands and agrees that, in the event the Contractor employs or contracts with any subcontractor or subcontractors in connection with this Agreement, the Contractor shall:

1. Secure from each such subcontractor an indication of the employee-number category as identified in O.C.G.A. § 13-10-91 that is applicable to the subcontractor;
2. Secure from each such subcontractor an attestation of the subcontractor's compliance with O.C.G.A. § 13-10-91 and Georgia Department of Labor Rule 300-10-1-.02 by causing each such subcontractor to execute the subcontractor affidavit required by Georgia Department of Labor Rule 300-10-1-.08, or a substantially similar subcontractor affidavit. The Contractor further understands and

agrees that the Contractor shall require the executed subcontractor affidavit to become a part of the agreement between the Contractor and each such subcontractor and shall provide a copy of said affidavit to the City. The Contractor agrees to maintain records of each subcontractor attestation required hereunder for inspection by the City at any time.

D. Contractor's failure to comply with the requirements of O.C.G.A. § 13-10-91 and Georgia Department of Labor Rule 300-10-1-.02 shall be a material default of performance of this Agreement and may result in termination of this Agreement for such default, pursuant to the termination provisions of this Agreement.

By the signature below, Contractor's duly authorized representative acknowledges the contractual requirements contained in this document and agrees to comply with them as required by law.

This _____ day of _____ , 20__.

ATTEST:

_____
Contractor's Representative

_____
Contractor's Representative (Print Name)

EXHIBIT E

PAYMENT AND PERFORMANCE BONDS

Payment Bond

INSTRUCTIONS

1. This form is required for use in connection with the Agreement identified on its face. There shall be no deviation from this form without approval by the Commission.

2. The full legal name and business address of the Principal shall be inserted in the space designated "Principal" on the face of the form. The bond shall be signed by an authorized person. Where such person is signing in a representative capacity (e.g., an attorney-in-fact), but is not a member of the firm, partnership, or joint venture, or an office of the corporation involved, evidence of this authority must be furnished.

3. Corporation executing the bond as surety must be among those appearing on the U.S. Treasury Department's most current list of approved sureties and must be acting within the amounts and limitations set forth therein.

4. Corporate surety shall be duly authorized by the Commissioner of Insurance of the State of Georgia to transact surety business in the State of Georgia.

5. Do not date this bond. The Commission will date this bond the same date or later than the date of the Agreement.

6. The Surety shall attach a duly authorized power-of-attorney authorizing signature on its behalf of any attorney-in-fact.

7. Corporations executing the bond shall affix their corporate seals. Individuals shall execute the bond opposite the word "Seal."

8. The name of each person signing this bond shall be typed or printed in the space provided.

Payment Bond

"Commission"- means Atlanta Fulton County Water Resources Commission, a joint venture partnership between the City of Atlanta, a municipal corporation of the State of Georgia, and Fulton County, a political subdivision of the State of Georgia.
"Project" - means FC-5076 Atlanta-Fulton County Water Treatment Plant Bulk Hypochlorite System and Filter/Plate Settler Improvements_____

"FC No." FC-5076_____
"Principal" (Legal Name and Business Address) ._____

_____

_____

Type of Organization ("X" one): _____ Individual
_____ Partnership
_____ Joint Venture
_____ Corporation

"Surety:" (Name and Business Address) _____

_____

_____,
duly authorized by the Commissioner of Insurance of the State of Georgia to transact surety business in the State of Georgia.

"Agreement:" Agreement between Principal and Commission, dated _____ day of _____, 20___, regarding performance of Work relative to the Project.

"Penal Sum:" _____.

KNOW ALL MEN BY THESE PRESENTS, that we, the Principal and Surety hereto, as named above, are held and firmly bound to the Commission in the above Penal Sum for the payment of which well and truly to be made we bind ourselves, our heirs, executors, administrators, successors, jointly and severally.

WHEREAS, the Principal and the Commission entered into the Agreement identified above;

NOW, THEREFORE, the conditions of this obligation are such that if the Principal shall make payment of all Subcontractors and all persons supplying labor, Materials, machinery and Equipment for the performance of said work, this obligation shall be void; otherwise of full force and effect.

And the Surety to this bond, for value received, agrees that no modification, change, extension of time, alteration or addition to the terms of the Agreement or to the Work to be performed thereunder shall in any wise affect its obligation on this bond, and it does hereby waive notice of any such modification, change, extension of time, alteration or addition to the terms of the Agreement or the Work.

It is agreed that this bond is executed pursuant to and in accordance with the provisions of O.C.G.A. Section 36-91-1 *et seq.* and is intended to be and shall be construed to be a bond in compliance with the requirements thereof, though not restricted thereto.

IN WITNESS WHEREOF, the Principal and the Surety have caused these presents to be duly signed and sealed this _____ day of _____, 20___.

PRINCIPAL:_____

_____
President/Vice President (Sign)

_____
President/Vice President (Type or Print)

Attested to by:

_____
Secretary/Assistant Secretary (Seal)

SURETY:_____

By: _____
Attorney-in-Fact (Sign)

_____
Attorney-in-Fact (Type or Print)

APPROVED AS TO FORM

_____
Associate/Assistant City Attorney

APPROVED AS TO FORM

_____
County Attorney

APPROVED

_____
City of Atlanta Chief Financial Officer

APPROVED

_____

Performance Bond

INSTRUCTIONS

1. This form is required for use in connection with the Agreement identified on its face. There shall be no deviation from this form without approval by the Commission.

2. The full legal name and business address of the Principal shall be inserted in the space designated "Principal" on the face of the form. The bond shall be signed by an authorized person. Where such person is signing in a representative capacity (e.g., an attorney-in-fact), but is not a member of the firm, partnership, or joint venture, or an office of the corporation involved, evidence of this authority must be furnished.

3. Corporation executing the bond as surety must be among those appearing on the U.S. Treasury Department's most current list of approved sureties and must be acting within the amounts and limitations set forth therein.

4. Corporate surety shall be duly authorized by the Commissioner of Insurance of the State of Georgia to transact surety business in the State of Georgia.

5. Do not date this bond. The Commission will date this bond the same date or later than the date of the Agreement.

6. The Surety shall attach a duly authorized power-of-attorney authorizing signature on its behalf of any attorney-in-fact.

7. Corporations executing the bond shall affix their corporate seals. Individuals shall execute the bond opposite the word "Seal."

8. The name of each person signing this bond shall be typed or printed in the space provided.

Performance Bond

"Commission"Atlanta Fulton County Water Resources Commission

"Project" FC-5076 Atlanta-Fulton County Water Treatment Plant Bulk Hypochlorite System and Filter/Plate Settler Improvements

"FC No." _____

"Principal" (Legal Name and Business Address) _____

_____

_____

Type of Organization ("X" one): _____ Individual
_____ Partnership
_____ Joint Venture
_____ Corporation

"Surety:" (Name and Business Address) _____

_____

_____,
duly authorized by the Commissioner of Insurance of the State of Georgia to transact surety business in the State of Georgia.

"Agreement:" Agreement between Principal and Commission, dated _____ day of _____, 20___, regarding performance of Work relative to the Project.

"Penal Sum:" _____.

KNOW ALL MEN BY THESE PRESENTS, that we, the Principal and Surety hereto, as named above, are held and firmly bound to the Commission in the above Penal Sum for the payment of which well and truly to be made we bind ourselves, our heirs, executors, administrators, successors, jointly and severally.

WHEREAS, the Principal and the Commission entered into the Agreement identified above;

NOW, THEREFORE, the conditions of this obligation are such that if the Principal shall faithfully and fully comply with, perform and fulfill all of the undertakings, covenants, conditions and all other of the terms and conditions of said Agreement, including any and all duly authorized modifications of such Agreement, within the original term of such Agreement and any extensions thereof, which shall include, but not be limited to any obligations created by way of warranties and/or guarantees for workmanship and materials which warranty and/or guarantee may extend for a period of time of one year beyond completion of said Agreement, this obligation shall be void; otherwise, of full force and effect.

And the Surety to this bond, for value received, agrees that no modification, change, extension of time, alteration or addition to the terms of the Agreement or to the Work to be performed thereunder shall in any wise affect its obligation on this bond, and it does hereby waive notice of any such modification, change, extension of time, alteration or addition to the terms of the Agreement or the Work.

It is agreed that this bond is executed pursuant to and in accordance with the provision of O.C.G.A. Section 13-10-1 and 36-91-1, *et seq.* and is intended to be and shall be construed to be a bond in compliance with the requirements thereof, though not restricted thereto.

IN WITNESS WHEREOF, the Principal and the Surety have caused these presents to be duly signed and sealed this _____ day of _____, 20___.

PRINCIPAL:_____

_____
President/Vice President (Sign)

_____
President/Vice President (Type or Print)

Attested to by:

_____
Secretary/Assistant Secretary (Seal)

SURETY:_____

By: _____
Attorney-in-Fact (Sign)

_____
Attorney-in-Fact (Type or Print)

APPROVED AS TO FORM

_____
Associate/Assistant City Attorney

APPROVED AS TO FORM

_____
County Attorney

APPROVED

_____
City's Chief Financial Officer

APPROVED

_____

GENERAL CONDITIONS

TABLE OF CONTENTS

Page No.

GC-1 AGREEMENT AND AGREEMENT DOCUMENTS 1
GC-2 ADDITIONAL INSTRUCTIONS AND DETAIL DRAWINGS 2
GC-3 DEFINITIONS 2
GC-4 APPLICABLE CODES, SPECIFICATIONS, AND STANDARDS 9
GC-4.1 General 9
GC-4.2 Standards 10
GC-5 ADEQUACY OF DESIGN 10
GC-6 CITY OF ATLANTA ORDINANCES [intentionally deleted] 12
GC-7 PERMITS AND REGULATIONS 12
GC-8 TAXES 12
GC-9 ARREARS TO OFFSET DEBT AGAINST COMMISSION 12
GC-10 LIENS 13
GC-11 ASSIGNMENTS 13
GC-12 PATENTS AND ROYALTIES 14
GC-13 OUT-OF-STATE CONTRACTORS 14
GC-14 CONTRACTOR'S OBLIGATIONS 15
GC-14.1 Supervision and Construction Procedures 15
GC-14.2 Labor and Materials 16
GC-14.3 Contractor's Construction Schedule 16
GC-14.4 Conditions Affecting the Work 16
GC-15 RIGHT OF ENTRY 17
GC-16 NOTICES 17
GC-17 SAFETY PRECAUTIONS AND PROGRAMS 18
GC-18 SAFETY OF PERSONS AND PROPERTY 18
GC-18.1 Damage, Injury, or Loss 18
GC-18.2 Notice 18
GC-18.3 Warning, Signage 18
GC-18.4 Hazardous Materials 19
GC-18.5 Remedy 19
GC-18.6 Project Safety Coordinator 19
GC-18.7 Loads 19
GC-18.8 Emergencies 20
GC-18.9 Miscellaneous 20
GC-19 USE OF PREMISES AND CLEAN UP 21
GC-19.1 Storage, Cleanup and Cutting 21
GC-19.2 Protection and Use of Site 22
GC-20 PROTECTION OF AGREEMENT WORK 24
GC-21 DEFECTS IN THE WORK AND UNAUTHORIZED WORK 24
GC-22 GUARANTEE OF WORK AND MATERIALS 25
GC-22.1 Warranty of Materials, Equipment and Work 25
GC-22.2 Warranty of Continued Liability of Electronics 25
GC-22.3 Guarantee and Repair 26
GC-22.4 Manufacturer Warranties 26

GC-22.5 Non-Exclusive Nature of Warranties 26
GC-23 TERMINATION OF AGREEMENT 26
GC-23.1 Termination for Contractor Default 26
GC-23.2 Commission's Right to Stop the Work 28
GC-23.3 Intentionally Omitted 28
GC-23.4 Termination for Convenience of Commission 28
GC-23.5 General Termination Provisions 30
GC-24 SUSPENSION OF WORK 33
GC-24.1 Right to Suspend Work 33
GC-24.2 Rights Upon Certain Unreasonable Suspensions 33
GC-24.3 Damages Upon Suspension 34
GC-24.4 Time Extension Upon Suspension 34
GC-24.5 Damages for Non-Excusable Delays 34
GC-24.6 Abnormal Weather 35
GC-24.7 Impacts From Adjacent Property 35
GC-25 COMMENCEMENT AND PROSECUTION OF THE WORK 35
GC-26 TIME 36
GC-26.1 Progress and Completion 36
GC-26.2 Delay, Damages, and Extensions of Time 36
GC-27 RESPONSIBILITY FOR COMPLETION 40
GC-27.1 Duty to Accelerate 40
GC-27.2 Recoverable Acceleration Expenses 40
GC-27.3 Acceleration by Commission's Forces 41
GC-27.4 Set-Off of Acceleration Costs 41
GC-27.5 Acceleration Remedies Cumulative 41
GC-28 WORKING DRAWINGS, SHOP DRAWINGS, DATA ON MATERIAL 42
AND EQUIPMENT, SAMPLES, AND LICENSES 42
GC-28.1 General 42
GC-28.2 Shop Drawings 44
GC-28.3 Working Drawings 46
GC-28.4 Record Agreement Drawings 47
GC-28.5 Samples 47
GC-28.6 Operation and Maintenance Manuals 48
GC-29 CONTRACTOR'S TITLE TO MATERIALS 49
GC-30 INSPECTION AND TESTING OF MATERIALS 50
GC-31 MATERIALS AND EQUIPMENT 51
GC-32 STORAGE OF MATERIALS AND EQUIPMENT 51
GC-33 REPORTS, RECORDS, AND DATA 51
GC-33.1 General 52
GC-33.2 Payroll Reports 52
GC-33.3 Contractor's Daily Reports 52
GC-34 CONTRACTOR'S SUPERVISION OF THE WORK 52
GC-34.1 General 52
GC-34.2 Contractor's Representative 52
GC-35 SUBCONTRACTORS AND SUPPLIERS 53
GC-36 INSPECTION OF WORK 54

GC-36.1 General 54
GC-36.2 Engineer's Access to Work 54
GC-36.3 Cooperation And Safety 54
GC-36.4 Inspection of Covered or Completed Portions of Work 55
GC-36.5 Inspection Not a Waiver or Acceptance 55
GC-36.6 Correction of Non-Compliant Work 55
GC-37 COMMISSION'S AUTHORITY 56
GC-38 PROGRESS PAYMENTS 56
GC-38.1 Progress Estimates 56
GC-38.2 Progress Payments 57
GC-38.3 Retention from Progress Payments 57
GC-38.4 Additional Payment Conditions 58
GC-38.5 Payments Withheld 60
GC-38.6 Waiver and Preservation of Claims In Periodic Application of Payments ... 61
GC-39 SUBSTANTIAL COMPLETION ("Substantial Completion") 62
GC-39.1 Certificate of Substantial Completion 62
GC-39.2 Warranty Commencement 62
GC-39.3 Intentionally Omitted 62
GC-40 FINAL PAYMENT ("Final Payment") 62
GC-40.1 Certificate for Final Payment 62
GC-40.2 Final Payment Conditions 62
GC-40.3 Intentionally Omitted 63
GC-40.4 Waiver of Claims by Contractor Upon Final Payment 63
GC-41 CLAIMS, CHANGES, AND EXTRA WORK 64
GC-41.1 Claims and Contractor's Obligation to Proceed in the Face of Disputes 64
GC-41.2 Changes in the Work 68
GC-41.3 No Oral Changes. 76
GC-42 MISCELLANEOUS MODIFICATIONS AND ALLOWANCE ITEMS 77
GC-43 OWNERSHIP AND USE OF DOCUMENTS 77
GC-44 CHANGED CONDITIONS 77
GC-45 INTENTIONALLY OMITTED 78
GC-46 INTENTIONALLY OMITTED 78
GC-47 INTENTIONALLY OMITTED 78
GC-48 INTENTIONALLY OMITTED 78
GC-49 MEASUREMENT AND PAYMENT 78
GC-49.1 Measurement 79
GC-49.2 Payment at Agreement Prices 79
GC-50 HISTORICAL, SCIENTIFIC, AND ARCHEOLOGICAL DISCOVERIES 79
GC-51 SEPARATE AGREEMENTS 79
GC-51.1 Separate Contractors 79
GC-51.2 Cooperation 79
GC-51.3 Review of Separate Contractor's Work 80
GC-51.4 Notice to Contractor 80
GC-51.5 Damage to Separate Contractor 80
GC-51.6 Commission's Right to Clean Up 80
GC-52 OFFICIAL NOT TO BENEFIT 80

GC-53 GRATUITIES AND KICKBACKS 81
GC-54 PRECONSTRUCTION CONFERENCE 81
GC-55 TIME OF COMPLETION AND LIQUIDATED DAMAGES 81
GC-55.1 Liquidated Damages 82
GC-55.2 No Penalty 82
GC-56 RIGHT TO AUDIT 83
GC-57 DISPUTES 83
GC-57.1 Mediation 83
GC-57.2 Arbitration at the Commission's Election 83
GC-58 AGREEMENT ADMINISTRATION DOCUMENTS 84
GC-59 MISCELLANEOUS PROVISIONS 85
GC-59.1 Governing Law 85
GC-59.2 Contingent Assignment 85
GC-59.3 Rights and Remedies 85
GC-59.4 Unenforceability of any Article 86
GC-59.5 Obligation to Perform 86
GC-59.6 Labor Relations 86
GC-59.7 Covenant Not to Sue 86
GC-60 [intentionally deleted] 87
GC-61 [intentionally deleted] 87
GC-62 WAGE RATES AND REPORTING PROCEDURES 87
GC-62.1 Certified Payrolls 87
GC-62.2 Submittals 87
GC-62.3 [intentionally deleted] 87

PROJECT NO. FC-5076

PROJECT TITLE

ATLANTA FULTON COUNTY WATER TREATMENT PLANT BULK HYPOCHLORITE SYSTEM AND FILTER/PLATE SETTLER IMPROVEMENTS

GENERAL CONDITIONS

GC-1 AGREEMENT AND AGREEMENT DOCUMENTS

The General Conditions, Special Conditions, Technical Provisions, Drawings, Changes, and all other parts of the Agreement Documents are complementary, and a requirement occurring in one shall be as binding as though occurring in all. The parts of the Agreement are complementary and describe and provide for completion of the Work. The table of contents, titles, headings, running headlines and marginal notes contained herein and in said documents are solely to facilitate reference to various provisions of the Agreement Documents and in no way affect, and shall not be considered in the interpretation of the provisions to which they refer.

Execution of the Agreement by Contractor is a representation that Contractor has visited the Site, become familiar with the local conditions under which the Work is to be performed, and has correlated personal observations with the requirements of the Agreement Documents.

The intent of the Agreement Documents is to include all items necessary for the proper execution and completion of the Work. Work not specifically covered in the Agreement Documents shall be required if it is consistent therewith and reasonably inferable therefrom as being necessary to produce the intended results. Words and abbreviations that have well-known technical or trade meanings are used in the Agreement Documents in accordance with such recognized meanings.

If and to the extent of any inconsistency, ambiguity, conflict, discrepancy or error in the Agreement Documents (a “discrepancy”), Contractor shall immediately notify the Owner in writing and seek clarification from the Owner (within 24 hours of discovery). In the event that the Owner fails to clarify such discrepancy within a reasonable time under the circumstances, Contractor shall proceed with the Work and give precedence to the Agreement Documents in the following order of priority:

(1) Written modifications (including without limitation Change Orders and Change Directives) issued after execution of the Agreement;

(2) Addenda issued in writing prior to the execution of the Agreement;

(3) the Agreement;

(4) Addendum, if any, to the General Conditions and Special Conditions;

(5) Special Conditions;

(6) the General Conditions;

(7) the Specifications; and

(8) the Plans and Drawings.

If the application of the foregoing procedure fails to resolve the discrepancy, then unless Contractor sought and obtained the clarification of the discrepancy prior to entering this Agreement, then the discrepancy shall be resolved by construing the provision in favor of the Owner and in such a manner as will further the Owner's best interests and which may impose the more expensive or greater obligation upon Contractor. When Contractor fails to provide this notice and seek clarification, Contractor assumes full responsibility to correct or adjust work performed pursuant to Agreement Documents known, or which should have been known, to contain such a discrepancy.

GC-2 ADDITIONAL INSTRUCTIONS AND DETAIL DRAWINGS

During the progress of the Work, the Engineer may issue additional instructions and Drawings supplemental to those listed in the Special Conditions showing additional details required for the performance of the Work, and may issue revised Drawings pursuant to Change Orders or Change Directives, or for correction of errors in the Plans. The additional instructions and Drawings thus supplied will become a part of the Agreement Documents. Contractor shall carry out the Work in accordance with the additional instructions and Drawings.

GC-3 DEFINITIONS

The following terms as used in this Agreement are respectively defined, as follows:

Abandonment - Shall mean the permanent termination of the use of, or of service from in or on, a facility.

Approved, Directed, Ordered, Or Their Derivatives - Approved, as directed, or ordered by the Engineer or the Commission, unless otherwise clearly indicated.

Acceptance - The formal written acceptance by the Commission of the fully and finally completed Work.

Addenda - Revisions to the Proposal Documents issued by the Commission prior to opening of the Bid.

Agreement - The written agreement for the performance of and payment for the Work, which includes by reference and is a part of the Agreement Documents, executed on behalf of the Commission and the Contactor, also called Commission-Contractor Agreement.

Agreement Documents - The Agreement Documents are defined in other portions of the Agreement, but include, at least, the following, if applicable to this Project:

The Commission-Contractor Agreement;
- Appendix A - Equal Business Opportunity Program:
  - Policy Statement;
  - Equal Business Opportunity (EBO) M/FBE Availability;
  - Equal Business Opportunity Program Reminders;
  - Covenant of Non-discrimination (EBO-1);
  - Subcontractor Contact Form (EBO-2);
  - Equal Business Opportunity Subcontractor Project Plan (EBO-3)
  - First Source Jobs Information (Form-4);
  - First Source Jobs Agreement (Form-5)

Appendix B: Insurance and Bonding Requirements;
Appendix C: Contractor's Questionnaire and Disclosure Form;
Appendix D: Local Bidder Preference Program
Exhibit A and A-1: Legislation;
Exhibit B: Required Submittals:
- Authorization to Transact Business;
- Bid Guarantee;
- Bid Documentation - Certifications;
- Bid Form;
- Statement of Bidders Qualifications;
- Affidavit;

Exhibit C: Contractor's Georgia Utility License Certificate;
Exhibit D: Georgia Security and Immigration Compliance Act of 2006 Affidavits;
Exhibit E: Performance and Payment Bonds;
Exhibit F: Addenda;
General Conditions (GC);
Special Conditions (SC);
Technical Specifications;
Plans and Drawings;
Any Additional Instructions and Detailed Drawings (as defined in the General Conditions, GC-2);

Modifications (including without limitation Change Orders or Change Directives) issued after execution of this Agreement; and
Approved Complete Network Schedule and Approved Revisions Thereto.

The Agreement Documents may also be referred to from time to time as the "Contract Documents."

Agreement Price - The price or prices for the Work or items of Work set forth in the Bid.

Agreement Time - The number of calendar days stated in the Agreement Documents for the Substantial Completion of the Work or Final Completion of the Work, or the achievement of a specific interim milestone, as the context may require.

Applicant - Shall mean any person, company or corporation who intends or plans to request for water services for a new development.

Application for Payment - The form approved by the Commission that is to be used by Contractor in requesting progress payments or final payment, together with such supporting documentation as is required in the Agreement Documents.

Bid - The offer or bid of the Bidder submitted in the prescribed manner on the prescribed form setting forth the prices for the Work to be performed together with supplemental information as required by the Agreement Documents.

Bidder - Any person, firm, partnership, corporation or any combination thereof submitting a Bid for the Work.

Bonds - Bid, Performance Bonds, Payment Bonds, and other instruments of security furnished by Contractor and his surety in accordance with the Agreement Documents. Bond means a written instrument of surety approved by the Commission with a valid Certificate of Authority issued by the United States Department of Treasury under Sections 9304 to 9308 of Title One of the United States Code as security to the Commission, on behalf of a Bidder or the Contractor, to guaranty faithful performance of acts, duties or obligations under the Contract Documents and includes the following.

- Bid Bond means the security instrument furnished with a Bid to guaranty that, if the Bidder is awarded the Contract, the Bidder will execute the Agreement within the time specified in the Bidding Documents.

- Maintenance Bond, if required on the Project, means the security instrument furnished by the Contractor and its surety on the approved form as a guaranty, in addition to other warranties and guaranties, to remedy any defects in the Work of the Contractor which may develop during the warranty period after Completion of the Contract.

- Payment Bond means the security instrument furnished by the Contractor and its surety on the Payment Bond Form as a guaranty that Contractor will pay in full all bills and accounts for materials and labor used in the Work.

- Performance Bond means the security instrument furnished by the Contractor and its surety on the Performance Bond Form as a guaranty that the Contractor will complete the Work in accordance with the terms of the Contract.

Change - Any change in the Work authorized by the Engineer.

Change Directive – A written order prepared by the Owner and signed by the Owner directing a Change in the Work prior to agreement or adjustment, if any, in the Agreement Price or Agreement Time, or both.

Change Order - A written agreement signed by the Owner and Contractor, stating their agreement upon all of the following: (1) change in the Work; (2) the amount of the adjustment, if any, in the Agreement Price; and (3) the extent of the adjustment, if any, in the Agreement Time.

City - Shall mean the City of Atlanta, Georgia, and shall include all agencies, establishments or officials of the government of the City.

Commission-Contractor Agreement - The written agreement for the performance of and payment for the Work executed on behalf of the Commission and the Contactor, which is both a part of the Agreement Documents and includes all Agreement Documents by reference. The Commission-Contractor Agreement may also be called “Agreement.”

Commission’s Contractor - Shall mean the legally authorized representative of the Commission, a private contractor, or other concerned agency performing Work under a direct Agreement with the Commission.

Commission – Shall mean Atlanta Fulton County Water Resources Commission, a joint venture between the City of Atlanta and Fulton County. The Commission may also be referred to from time to time as the “Owner.”

Construction - Shall mean the actual site preparation, building and all related Work, including facility relocation and adjustments.

Construction Easement/Temporary Easement - Any space or area dedicated to the Commission or other entity for the purpose of utilities or location of utilities for a specific period of time.

Construction Equipment - Equipment used in the performance of the Work but not incorporated therein.

Contract Documents - The Agreement Documents referenced above.

Contractor - Any firm, partnership, corporation, joint venture, LLC or any combination thereof who enters into a contractual Agreement with the Commission. This excludes Subcontractors/Sub-consultants.

County – Shall mean Fulton County, Georgia, a political subdivision of the State of Georgia.

CPM Schedule – A logic tied computerized network schedule incorporating all elements of the Work, prepared and updated in accordance with the requirements of the Special Conditions, subject to approval of the Commission.

Day - A calendar day of twenty-four (24) hours lasting from midnight one (1) day to midnight the next day.

Department - Shall mean the Department of Watershed Management.

Designer - Shall refer to the firm licensed to practice engineering in the State of Georgia that seals the plans and specifications prior to bid.

Drawings - That part of the Agreement Documents which show the shape, outlines, dimensions, characteristics, scope of and other similar requirements governing the Work, or portions thereof, prepared by the Designer and including revisions thereto. The term is used interchangeably with the word "Plans" and includes without limitation Standard Details and Drawings.

Engineer - Commission or duly authorized representative assigned to administer the technical aspects of the Agreement. The terms Resident Engineer, Contract Administrator, or Contract Manager may be used interchangeably to denote the person designated expressly by the Commission with authority to administer the Agreement.

Equipment - Equipment incorporated or to be incorporated in the Work.

Force Account - A method of payment, other than lump sum or unit price, for Work ordered by Change Order and paid for in accordance with force account procedures indicated in “Force Account” Section of the General Conditions.

General Conditions - The General Conditions of the Agreement for construction that govern the rights, duties, and obligations of the parties.

GDOT - The Georgia Department of Transportation.

Inspector - The authorized representative of the Engineer or the Commission assigned to make detailed inspection of any or all portions of the Work or Materials thereof.

MARTA - Shall mean the Metropolitan Atlanta Rapid Transit Authority, or its designated legal representatives.

Materials - Materials incorporated or to be incorporated in the Work unless otherwise clearly indicated.

Modifications – Binding changes, addenda, revisions, or the like, to the Work or the Agreement Documents, including Changes to Work made by Change Order or Change Directive as required by GC-41.

Notice of Intent or Letter of Intent to Award - The written notice of the acceptance of the Bid from the Commission to a Bidder.

Notice to Proceed - ("NTP") Written communication issued by the Commission to Contractor authorizing it to proceed with the Work and establishing the date of commencement of the Agreement time and on which Contractor shall start to perform his obligations in accordance with the Agreement Documents.

Owner - Same as "Commission" above.

Permanent Easement - Any space or area dedicated to the Commission or other entity for the purpose of constructing and/or maintain existing or future utilities.

Plans - That portion of the Agreement Documents describing in drawings, the shapes, outlines, dimensions, characteristics, scope and other similar requirements governing the of Work, or portions thereof, prepared by the Designer and including revisions thereto. The term is used interchangeably with the word "Drawings" and includes without limitation Standard Details and Drawings.

Project - The Project is identified in the Commission-Contractor Agreement and is the total construction of which the Work performed under the Agreement Documents is a part.

Public Space/Public Right-of-Way - Shall mean the area between private property lines under the jurisdiction of a municipal, county, state or federal government, including, but not limited to, an alley, roadway, median, sidewalk, public way, or any combination thereof.

Punch List - Shall mean the lists prepared by the Commission's Representative or Design Consultant prior to Substantial Completion and through Final Completion indicating items of Work not in accordance with the requirements of the Contract Documents and which must be performed, corrected and accomplished prior to acceptance of the Work.

Replacement Facility - Shall mean that facility, meeting the Department's current standards, which will be constructed or provided, as a consequence of the rearrangement of an existing facility or portion thereof.

Resident Engineer - The Commission's Engineer who is assigned to the Site or any part thereof.

Responsive Bid - A Bid which is accurate and complete with respect to Bid schedules and information submitted relative to the technical qualifications, financial responsibility and is able to comply with Equal Opportunity and other requirements of the Agreement Documents.

Samples - Shall mean physical examples furnished by Contractor, which illustrate materials, equipment or workmanship. Approved Samples in conformance with the Contract Documents establish the standards of the Work.

Shop Drawings - Shall mean drawings, diagrams, illustrations, schedules or other data illustrating the Work, and all illustrations, brochures, standard schedules, performance charts, specifications, instructions, diagrams, and other information prepared by a Subcontractor, Supplier, vendor or manufacturer and submitted by Contractor as required in the Contract Documents.

Scope of Services - See "Work."

Sidewalk Area - Shall mean that portion of a street between the curb lines and the adjacent property lines intended primarily for the use of pedestrians whether paved or in use.

Site - The areas required for the performance of the Work.

Special Conditions - Terms which supplement items covered in General Conditions.

Specifications, Technical Specifications - Shall mean those portions of the Contract Documents consisting of written technical descriptions, provisions or requirements of the Work to be performed under the Contract Documents, including, but not limited to, the quantities or quality of materials, equipment, construction systems or applications. Standards for specifying materials or testing that are cited in the Specifications are part of the Contract Documents.

Standards - Shall mean those current Standards of Engineering analysis and design, including Installation and Material Specifications, which the Commission utilizes in the design and construction of its own projects.

State - The State of Georgia.

Subcontractor - An individual, firm, corporation or any combination thereof having a direct contract with Contractor for the performance of a part of the Work at the site.

Substantial Completion - The date certified by the Engineer when all or a part of the Work, identified in the Engineer's certification, is sufficiently completed in accordance with the requirements of the Agreement Documents so that the identified portion of the Work can be utilized for the purposes for which it is intended.

Supplier - Any individual, firm, or corporation who supplies Material or Equipment for the Work (including that fabricated to a special design) but who does not perform or provide significant labor at the Site.

Temporary Facility - Shall mean a facility constructed for whatever purpose and not intended to be permanent.

Utility - Shall mean and include all public, private, or cooperatively owned lines, facilities and systems for producing, transmitting or distributing communications, power, electricity, heat, gas, oil, crude products, water, steam, waste, storm water, and other similar commodities, such as public owned fire and police signal systems, which directly or indirectly serve the public or any part thereof.

Work - All the services specified, indicated, shown, or contemplated by the Agreement Documents and the furnishing by Contractor of all Materials, Equipment, labor, methods, processes, construction and manufacturing materials and equipment, tools, plants, supplies, power, water, transportation and other things necessary to complete such services in accordance with the Agreement Documents and that will ensure a functional and complete facility.

Working Days - Generally, Monday, Tuesday, Wednesday, Thursday, and Friday; however, on some projects, Saturday and/or Sunday may be considered working days, if specified as working days by the Commission or Engineer.

Written Notice - A written statement transmitted from one party to an authorized representative of another party.

GC-4 APPLICABLE CODES, SPECIFICATIONS, AND STANDARDS

GC-4.1 General

All codes, Specifications, regulations, laws, ordinances, and standards referred to in the Agreement Documents shall mean, and are intended to be, the latest editions, amendment, and revisions of such reference standard in effect as of the date of the Invitation to bid for this Agreement, and as may be updated or amended to be applicable to the Project.

GC-4.2 Standards

Reference to a technical society, institution, association, or governmental authority, or pronoun in place of them, is made in the Agreement Documents in accordance with the following abbreviations:

ANSI	American National Standards Institute;
ASTM	American Society for Testing and Materials;
AWS	American Welding Society;
AASHTO	American Association of State Highway and Transportation Officials;
ACI	American Concrete Institute;
AFBMA	Anti-Friction Bearing Manufacturer's Association;
AI	Asphalt Institute;
AISI	American Iron and Steel Institute;
AISC	American Institute of Steel Construction;
AMCA	Air Moving and Conditioning Association;
API	American Petroleum Institute;
ASME	American Society of Mechanical Engineers;
ASTM	American Society for Testing and Materials;
AWG	American (Brown and Sharpe) Wire Gauge;
AWS	American Welding Society;
AWWA	American Water Works Association;
CRSI	Concrete Reinforcing Steel Institute;
EPA	Environmental Protection Agency (Federal);
EPD	Environmental Protection Division (Georgia State);
GDOT	Georgia Department of Transportation (“GDOT”);
MARTA	Metropolitan Atlanta Rapid Transit Authority;
NACE	National Association of Corrosion Engineers;
NFPA	National Fire Protection Association;
NSF	National Sanitary Foundation;
OSHA	Occupational Safety and Health Administration; and
UL	Underwriter’s Laboratories Incorporated.

GC-5 ADEQUACY OF DESIGN

Before placing its Bid to the Commission, and continuously after the execution of the Agreement, Contractor shall carefully study and compare the Agreement Documents and shall at once report any error, ambiguity, inconsistency or omission that may be discovered, including any requirement which may be contrary to any law, ordinance, rule, regulation, or order of any public authority bearing on the performance of the Work. By submitting its Bid for the Agreement and the Work under it, Contractor agrees that the Agreement Documents, along with any supplementary written instructions issued by or through the Engineer that have become a part of the Agreement Documents, appear accurate, consistent, and complete. Contractor shall perform no portion of the Work at

any time without Agreement Documents or, where required, approved shop Drawings, product data, or samples for such portion of the Work.

No claims shall be made by Contractor based on claims of defects, errors, omissions, ambiguities or inconsistencies in the Agreement Documents which were reasonably discoverable by a review of the Agreement Documents and correlation thereof with the actual conditions at the Project Site. No observation of the Engineer or Commission, and no inspections, tests or approval shall relieve Contractor from his obligation to perform the Work in strict conformity with the Agreement Documents.

Contractor has determined, by its own investigation and research, all the conditions affecting the work to be done and materials to be furnished and does not rely upon any representation by the Commission in connection therewith.

THE COMMISSION, ITS AGENTS AND EMPLOYEES MAKE NO REPRESENTATION OR WARRANTY OF ANY NATURE WHATSOEVER TO CONTRACTOR CONCERNING THE AGREEMENT DOCUMENTS. By the execution hereof, Contractor acknowledges and represents that it has received, reviewed and carefully examined such documents, has found them to be complete, accurate, adequate, consistent, coordinated and sufficient for construction, and that Contractor has not, does not, and will not rely upon any representations or warranties by the Commission concerning such documents as no such representations or warranties have been or are hereby made.

Prior to execution of the Contract, Contractor has evaluated and satisfied itself as to the condition and limitations under which the Work is to be performed, including, without limitation, (i) the location, condition, layout, and nature of the Project Site and surrounding areas, (ii) generally prevailing climatic conditions, (iii) anticipated labor supply and costs, (iv) availability and cost of materials, tools and equipment, and (v) other similar issues. With the exception of any differing site conditions clause, if any, that may be included in the Agreement Documents, the Commission assumes no responsibility or liability for the physical condition of the Project Site, or any improvements located on the Project Site. Contractor shall be solely responsible for providing a safe place for the performance of the Work.

Contractor acknowledges and agrees that its obligation to construct the Work in accordance with the Agreement Documents is not in any way altered or affected by the observations or inspections of the Commission or the Designer. Further, Contractor acknowledges and agrees that any warranty periods included herein merely set forth the time period during which Contractor is contractually required to specifically perform corrective work and that these warranty periods are not and shall not be construed to be exclusive remedies of the Commission. Instead, Contractor acknowledges and agrees that it shall be liable to the Commission for the cost of correcting Work not performed in accordance with the Agreement Documents for the full period of the applicable statute of limitations.

GC-6 CITY OF ATLANTA ORDINANCES. [INTENTIONALLY OMMITTED]

GC-7 PERMITS AND REGULATIONS

All applicable federal laws, state laws, municipal ordinances, and the rules and regulations of all authorities having jurisdiction over construction of the Project shall apply to the Agreement throughout to the extent that such requirements do not conflict with federal laws or regulations and in the event of a conflict, federal laws shall govern. All Work performed within the right of way of GDOT shall be in accordance with GDOT regulations, policies, and procedures.

Except as expressly stated in the Contract Documents, Contractor shall secure and will provide all building permits, licenses, and other applicable legal documents required for Contractor's performance of the Project.

Contractor shall give all notices and comply with all permits, laws, ordinances, rules and regulations bearing on the conduct of the Work as drawn and specified.

If any permit, license or certificate expires or is revoked, terminated or suspended as a result of any action on the part of Contractor or any person or entity for which Contractor is responsible, it shall neither be entitled to any additional compensation, nor to an extension of Agreement Time.

GC-8 TAXES

Contractor shall pay all sales, retail, occupational, service, excise, old age benefit and unemployment compensation taxes, consumer, use and other similar taxes as well as any other taxes or duties on the Material, Equipment and labor for the Work or portions thereof provided by Contractor which are legally enacted by any municipal, county, federal or state authority or department or agency thereof at the time Bids are received, whether or not yet effective.

All records maintained by Contractor pertaining to such taxes and levies and payment thereof shall be made available to the Commission at reasonable times for inspection, audit and copying.

GC-9 ARREARS TO OFFSET DEBT AGAINST COMMISSION

No money shall be paid by the Commission upon any claim, debt, demand or account whatsoever, to any person, firm, or corporation who is in arrears to the Commission for taxes, or any other debt or claim, and the Commission shall be entitled to counterclaim and/or offset any such debt, claim, demand or account in the amount of taxes so in

arrears or other debts or claims of the Commission, and no assignment or transfer of such debt, claim, demand, or account after the said taxes are due or after any such debt or claim is asserted by the Commission, shall affect the right of the Commission to so offset the said taxes, debts, or other obligations against the same.

Contractor agrees that the Commission shall be allowed to setoff and recoup any claim or demand that it may have against Contractor (or any of its constituent members if Contractor is a joint venture) whether such claim or demand is liquidated or unliquidated. Contractor further agrees that in the event it assigns or sells any amounts due or to become due under this Agreement, notice to the Commission of such assignment or sale shall not affect the Commission's rights of setoff or recoupment against Contractor for claims subsequently arising on this or any other project. Any assignee or purchaser of any amounts due Contractor under this Agreement shall be bound to these provisions and shall assume the risk of subsequently arising claims of setoff or recoupment.

GC-10 LIENS

Contractor acknowledges that neither it nor any of its Subcontractors or Suppliers have lien rights on public property. Contractor will furnish the Commission with evidence, satisfactory to the Commission that all persons who have done Work or furnished materials in performance of this Agreement have been fully paid before it shall demand final payment due or unpaid under this Agreement. In case such evidence is not furnished, an amount necessary to meet the lawful claims of the persons aforesaid may be retained from any monies due or that may become due the said Contractor under this Agreement until the lawful claims aforesaid shall be fully discharged, and it is understood and agreed that the Commission assumes no obligation nor in any way undertakes to pay such lawful claim out of any funds due or that may become due the said Contractor out of the Commission's own funds.

If, in its sole discretion, the Commission wishes to make joint payment to Contractor and any of its Subcontractors or Suppliers, Contractor agrees that the Commission may do so, and Contractor agrees to cooperate with the Commission in identifying the amounts due Subcontractors and Suppliers to facilitate the making of said joint payment.

GC-11 ASSIGNMENTS

Contractor shall retain personal control and shall give personal attention to the fulfillment of this Agreement. Contractor shall not assign the whole or any part of this Agreement or any monies due or to become due hereunder without the written consent of the Commission. In case Contractor assigns all or any part of any monies due or to become due under this Agreement, the instrument of assignment shall contain, or shall be deemed to contain, a clause substantially to the effect that it is agreed that the right of the assignee in and to any monies due or to become due to Contractor shall be

subject to claims of all persons, firms, and corporations for services rendered or materials supplied for the performance of the Work called for in this Agreement and to setoffs and recoupments by the Commission as set forth in GC-9 above. Any assignment of this Agreement in whole or in part or any assignment of monies due or to become due hereunder must bind the assignee to all terms and conditions of this Agreement and protect and preserve all rights and remedies of the Commission as against Contractor and extend to the Commission the same rights and remedies against assignee. In the event that any person or entity should claim entitlement to all or any part of any monies due or to become due under this Agreement under the doctrine of subrogation, it further agrees that its rights shall be subject to claims of all persons, firms, and corporations for services rendered or materials supplied for the performance of the Work called for in this Agreement and to setoffs and recoupments by the Commission as set forth in GC-9 above.

GC-12 PATENTS AND ROYALTIES

Contractor shall indemnify and hold harmless the Commission and its officers, agents, servants, and employees from liability or all claims of any nature or kind, including costs, attorneys' fees, and expenses for, or on account of, any patented or unpatented invention, process, article, or appliance manufactured or used in the performance of the Agreement, including its use by the Commission, unless otherwise specifically stipulated in the Agreement Documents.

If Contractor uses any design, device or Materials covered by letters, trademarks, patent or copyright, he shall provide for such use by suitable agreement between the Commission and the holder of such design, device or Material. It is mutually agreed and understood that, without exception, the Agreement Price shall include all royalties or costs arising from the use of such design, device, or Materials in any way involved in the Work. Contractor or his sureties or both shall indemnify and hold harmless the Commission, its officers and employees from any and all claims for infringement by reason of the use of such patented or copyrighted design, device or Materials or any trademark or copyright in connection with Work agreed to be performed under this Agreement and Contractor shall indemnify the Commission for any cost, expense or damage which it may be obliged to pay by reason of such infringement at any time during the prosecution of the Work or after completion of the Work, including any costs or expenses for experts and attorneys' fees.

GC-13 OUT-OF-STATE CONTRACTORS

If the lowest responsive Bidder is a foreign corporation, partnership, or sole proprietorship, the Bidder hereby irrevocably appoints the Secretary of State of Georgia as its agent for services of all legal process for the purpose of this Agreement only and shall obtain all required certificates and licenses required by the Georgia Law.

GC-14 CONTRACTOR'S OBLIGATIONS

GC-14.1 Supervision and Construction Procedures

GC-14.1.1

Contractor shall supervise and direct the Work, using Contractor's best skill and attention. Contractor shall be solely responsible for all construction means, methods, techniques, sequences and procedures and shall coordinate all portions of the Work under the Agreement. All Work under the Agreement shall be performed in a skillful and workmanlike manner. Contractor shall exercise its control over all means, methods, techniques, and procedures so as to carefully and diligently coordinate the work of all Subcontractors and Suppliers or anyone working by, through, or under Contractor or a Subcontractor or Supplier.

GC-14.1.2

Contractor shall be responsible to the Commission for the acts and omissions of Contractor's employees, Subcontractors, Suppliers, and their agents and employees, and any other persons performing any of the Work under a contract with Contractor or a Subcontractor or Supplier.

GC-14.1.3

Contractor shall not be relieved from Contractor's obligations to perform the Work in accordance with the Agreement Documents by the activities or duties of the Engineer in the administration of the Agreement or by inspections, tests, or approvals required or performed by persons other than Contractor.

GC-14.1.4

Contractor shall carefully study and compare the Agreement Documents with each other and with the site conditions and other information furnished by the Owner and shall at once report in writing to the Owner alleged errors, inconsistencies or omissions. If Contractor performs any construction activity involving an error, inconsistency or omission in the Agreement Documents that Contractor recognized or reasonably should have recognized and without having given written notice to the Owner, Contractor shall assume complete responsibility for such performance and shall bear the full amount of the attributable costs for correction.

GC-14.1.5

Contractor shall take field measurements and verify field conditions and shall carefully compare such field measurements and conditions and other information

available to Contractor with the Agreement Documents before commencing activities. Errors, inconsistencies, or omissions discovered shall be reported in writing to the Owner at once and shall be subject to the provisions of the last sentence of GC-14.1.4 above.

GC-14.2 Labor and Materials

GC-14.2.1

Unless otherwise provided in the Agreement Documents, Contractor shall provide and pay for all labor, Materials, Equipment, tools, construction equipment and machinery, water, heat, utilities, transportation, and other facilities and services necessary for the proper execution and completion of the Work, whether temporary or permanent, and whether or not incorporated or to be incorporated in the Work.

GC-14.2.2

Contractor shall, at all times, enforce strict discipline and good order among Contractor's employees and Subcontractors, and shall not employ on the Work any Subcontractor, unfit person or anyone not skilled in the task assigned them. The Commission may, after Written Notice, require Contractor to remove from the Work any employee the Commission deems incompetent, careless, or otherwise objectionable, including any employee of a Subcontractor or Supplier.

GC-14.2.3

All Work at the site shall be performed during regular working hours, except upon the Commission's written consent given after prior Written Notice.

GC-14.3 Contractor's Construction Schedule

Contractor shall comply with all scheduling requirements set forth in the Agreement Documents, including but not limited to the Special Conditions requirements for a CPM Schedule for performance of the Work.

GC-14.4 Conditions Affecting the Work

Contractor shall be responsible for having taken all steps necessary to ascertain the nature and location of the Work and the general and local conditions that can affect the Work or the cost thereof. Failure by Contractor to fully acquaint himself with conditions that may affect the Work, including but not limited to conditions relating to transportation, handling, storage of Materials, availability of labor, water, roads, weather, topographic and subsurface conditions, as-built conditions, other separate contracts to be entered into by the Commission relating to this Project that may affect the Work of Contractor, applicable provisions of law, and the character and availability

of equipment and facilities needed prior to and during the prosecution of the Work, shall not relieve Contractor of his responsibilities under the Agreement Documents and shall not constitute a basis for an equitable adjustment or additional compensation under any circumstances. The Commission assumes no responsibility for any understanding or representations concerning conditions made by any of its officers, agents, or employees prior to the execution of the Agreement, unless such understanding or representations are expressly stated in the Agreement Documents.

GC-15 RIGHT OF ENTRY

The Commission reserves the right to enter the Site of the Work herein contracted for, by such agent or agents as they may elect, for the purpose of inspecting the Work, or for the purpose of installing such collateral Work as the Commission may desire. Contractor shall cooperate and coordinate with other contractors prosecuting other phases of the construction. Furthermore, if deemed necessary by the Engineer, Contractor will incorporate work activities of other Commission contractors directly into the schedule such that no phase of the Project(s) is delayed or impacted.

GC-16 NOTICES

Any notice, consent, approval, or other communication which is provided for or required by the Agreement Documents must be in writing and may be delivered in person to any party or may be sent by a facsimile transmission or by registered or certified U.S. mail, with postage prepaid, return receipt requested. Copies of all facsimiles shall also be sent via first class mail. Any such notice or other written communication shall be deemed received by the party to whom it is sent (i) in the case of delivery by hand or delivery by reputable national or local courier (such as United Parcel Service or Federal Express), on the date of delivery to the party to whom such notice is addressed, (ii) in the case of facsimile transmission, one working day after the date of successful transmission (provided that an additional first class mail copy of such notice is subsequently received within five (5) days of the facsimile transmission), and (iii) in the case of registered or certified mail, the date receipt is acknowledged on the return receipt for such notice. All such notices and other written communications shall be sent to the persons and addresses listed below

If to Owner:

General Manager
Atlanta Fulton County Water Resources Commission
9750 Spruill Road
Johns Creek, Georgia 30022

If to Contractor:

_____

The addresses and persons listed may be changed at any time by giving Written Notice in accordance with this Article GC-16.

GC-17 SAFETY PRECAUTIONS AND PROGRAMS

The Commission, the Engineer, or their agents, employees or representatives are not responsible for the means, methods, techniques, sequences or procedures utilized by Contractor, or for the safety precautions and programs in connection with the Work. Contractor shall be responsible for initiating, maintaining, and supervising all safety precautions and programs in connection with the Work and for complying with all applicable rules, ordinances, state and federal laws and regulations.

GC-18 SAFETY OF PERSONS AND PROPERTY

GC-18.1 Damage, Injury, or Loss

Contractor shall take all reasonable precautions for the safety of, and shall provide all reasonable protection to prevent damage, injury, or loss to:

(1) All employees on the Work and all other persons who may be affected thereby;

(2) All the Work and all Materials and Equipment to be incorporated therein, whether in storage on or off the site, under the care, custody, or control of Contractor or any of Contractor's Subcontractors;

(3) Other property at the site or adjacent thereto, including trees, shrubs, lawns, walks, pavements, roadways, structures and utilities not designated for removal, relocation or replacement in the course of construction; and

(4) The Work of the Commission or other separate contractors.

GC-18.2 Notice

Contractor shall give all notices and comply with all applicable laws, ordinances, rules, regulations, and lawful orders of any public authority bearing on the safety of persons or property or their protection from damage, injury, or loss.

GC-18.3 Warning, Signage

Contractor shall erect and maintain, as required by existing conditions and the progress of the Work, all reasonable safeguards for safety and protection, including posting danger signs and other warnings against hazards, promulgating safety regulations and notifying owners and users of adjacent utilities.

GC-18.4 Hazardous Materials

When the use or storage of explosives or other hazardous materials or equipment is necessary for the execution of the Work, Contractor shall exercise the utmost care and shall carry on such activities under the supervision of properly qualified personnel.

GC-18.5 Remedy

Contractor shall promptly remedy all damage or loss to any property caused in whole or in part by Contractor, any Subcontractor, Supplier or anyone directly or indirectly employed by any of them, or by anyone for whose acts any of them may be liable, except damage or loss attributable solely to the acts or omissions of the Commission, the Engineer or anyone directly or indirectly employed by any of them in any way, or by anyone for whose acts any of them may be liable, and not attributable to the fault or negligence of Contractor. The foregoing obligations of Contractor are in addition to Contractor's obligations under the Insurance Section of the General Conditions or other provisions of the General Conditions.

GC-18.6 Project Safety Coordinator

Contractor shall employ a project safety coordinator who shall devote full time toward accident prevention during construction. The qualifications of the project safety coordinator shall be submitted to the Commission for approval prior to assignment to the Work and shall include:

(1) Five (5) years of construction loss control/safety experience in heavy construction; and
(2) Certified safety professional.

Also required (at least one of the following):

(1) Professional Member of the American Society of Safety Engineers (ASSE);
(2) Associate in Risk Management (ARM); and/or
(3) Associate in Loss Control Management (ALCM).

GC-18.7 Loads

Contractor shall not load or permit any part of the Work to be loaded so as to endanger its safety.

GC-18.8 Emergencies

In any emergency affecting the safety of persons or property, Contractor shall act, at Contractor's discretion, to prevent threatened damage, injury or loss. Any additional compensation or extension of time claimed by Contractor on account of emergency Work shall be determined as provided in the Agreement Documents, including GC-26 and GC-41.

GC-18.9 Miscellaneous

GC-18.9.1

Contractor acknowledges that he is fully aware of appropriate and safe procedures regarding blasting, including the contents and requirements of Official Code of Georgia Annotated § 25-9-1 through § 25-9-12, Blasting or Excavating Near Underground Gas Pipes and Facilities, any amendments thereto and rules and regulations issued pursuant thereto, and Contractor shall fully comply therewith. Contractor agrees and acknowledges that any failure on his part to adhere to appropriate procedures and said laws, rules and regulations shall not only be a violation of law but shall also be a breach of Agreement.

GC-18.9.2

Contractor acknowledges that he is fully aware of appropriate and safe procedures regarding high voltage lines, including the contents and requirements of Official Code of Georgia Annotated § 46-3-30 through § 46-3-39, Safeguards Against Contact with High Voltage Lines, any amendments thereto and rules and regulations issued pursuant thereto, and Contractor shall fully comply therewith. Contractor also confirms that representatives of Contractor have visited the site of the Work and have taken into consideration the location of all electric power lines on and adjacent to all areas onto which the Agreement Documents require or permit Contractor to Work, to store materials or to stage operations, and that Contractor has obtained from the owner or owners of the aforesaid electric power lines advice in writing as to the amount of voltage carried by the aforesaid lines. Contractor agrees that any failure on its part to adhere to appropriate procedures and said laws, rules and regulations shall not only be a violation of the law but shall also be a breach of Agreement.

GC-18.9.3

Contractor acknowledges and agrees that he is the person responsible under the law and that he is the person employing or directing others to perform labor within the meaning of Official Code of Georgia Annotated § 34-1-1, Labor and Industrial Relations. He acknowledges and agrees likewise that he will comply with said law.

GC-18.9.4

Contractor shall protect all Work, including but not limited to, excavations and trenches, from rain water, surface water, and backup of drains and sewers. Contractor shall furnish all labor, pumps, shoring, enclosures, and Equipment necessary to protect and keep the Work free of water.

GC-18.9.5

The provisions, terms and conditions of this Section, although very specific, are in no way intended to limit the general requirements hereof or the applicability of laws relating to Work conditions, safety or accident prevention and no specific provision or combination of specific provisions in any of said subsections or in any other parts or sections of the Agreement Documents shall be deemed to limit the obligations or responsibility of Contractor contained in general provisions with respect thereto or in laws, statutes, acts, rules or regulations which are applicable thereto but which are not specifically referred to in any part of the Agreement Documents.

GC-19 USE OF PREMISES AND CLEAN UP

GC-19.1 Storage, Cleanup and Cutting

Contractor expressly undertakes at no additional cost to the Commission:

(1) To store his Materials, Supplies and Equipment at the Site of the Work in such orderly fashion and in such locations as approved by the Engineer that will not unduly interfere with the progress of the Work, or the Work of any other contractors or the activities of Commission personnel.

(2) To clean up all refuse, rubbish, scrap materials, and debris caused by his operations to the end that at all times the Site of the Work shall present a neat orderly and workmanlike appearance. No items shall be left or discarded elsewhere on the Site, or any other Commission sites. Items that are to be discarded shall be removed to approved dump areas.

(3) To remove all surplus material, false work, temporary structures, including foundations thereof, temporary plants of any description and debris of every nature resulting from his operations, and to put the Site in a neat, orderly condition before final payment. Such final cleanup Work shall be performed within the time specified for completion of Work, with such exceptions as may be approved in writing by the Commission. Unless otherwise provided in the Specifications, Contractor shall clean any portion of Work for which a separate time for completion is specified and

the Site thereof to the above standards within the specified time, with such exceptions as may be approved in writing by the Commission.

(4) To effect all cutting, fitting or patching of his Work required to make the same to conform to the Plans and Specifications and except with the consent of the Commission, not to cut or otherwise alter the Work of any other contractor.

GC-19.2 Protection and Use of Site

Contractor shall, at no additional cost to the Commission:

(1) Coordinate all of Contractor's operations with, and secure approval from, the Commission before using any portion of the Site. Contractor shall assume full responsibility for any damage to any such land or area, or to the Commission or occupant thereof or of any land or areas contiguous thereto, resulting from the performance of the Work.

(2) Cause its agents and employees to park their vehicles only at locations directed by the Commission. Contractor's agents and employees shall clean vehicles leaving the Site so as not to muddy roads in the vicinity of the Site. Vehicles shall be brought to the Site only in connection with necessary Work on the Project. In no event shall vehicles be brought to the Site outside normal working hours unless the Commission gives specific written permission in advance.

(3) In connection with Contractor's operations, provide for the free flow of traffic over roads or streets in or adjacent to the Site. Contractor shall keep roads and streets free from obstructions of any character that might present a hazard or interference with traffic and in such condition that traffic can be adequately accommodated. When operations in connection with the Work necessitates the closing of traffic lanes, Contractor shall arrange in advance with the Commission, any adjacent property owners affected, and appropriate local authorities for such closing and shall provide as necessary appropriate barricades, signs, markers, flares and other devices and flagmen as may be required by the Engineer or the local authorities for traffic guides and public safety.

(4) Provide facilities for its use and only at locations approved or directed by the Commission. Unless otherwise specified in the Agreement Documents, Contractor shall provide all power and lighting necessary for its Work, complying in all cases with local and national electrical codes, OSHA regulations, and any other applicable laws. The Commission shall direct the point or points to be used for service connection. Contractor shall provide telephone facilities for his own use and only at locations approved or directed by the Commission.

(5) Unless otherwise specifically provided in the Agreement Documents, Contractor shall provide his own temporary facilities, including an office and a watertight, closed area for storage and protection of Materials and Equipment to be used for, or incorporated in, the Work, except as specifically agreed in the Agreement Documents. Contractor's shanties, material storage rooms, field offices and the like will be approved by the Commission and placed in locations designated by the Commission. If it becomes necessary during the course of the Work for Contractor to relocate his field operations, he will do so in an expeditious manner and at no additional cost.

(6) Contractor shall take measures to control the blowing or spreading of dust, smoke, dirt, mud and refuse from its Work to avoid nuisance and inconvenience to others whether on or off the Site. These measures shall be in compliance with, without being limited to, all applicable laws, and shall be subject to the Commission's approval. Contractor shall furnish all necessary labor and Materials such as water, approved chemicals, and Equipment.

(7) Contractor shall be responsible for the removal or drainage of all water interfering with the proper prosecution of his Work. It shall, at all times, assure such drainage and shall not be a nuisance or inconvenience to the Commission, other contractors or their Work, or the occupants or users of any other public or private area on or off the Site. This Article supplements, and does not supersede, any drainage or dewatering called for elsewhere in the Agreement Documents.

(8) Contractor shall not use permanent installed systems or equipment without permission of the Commission. If such permission is granted prior to completion of the Work, Contractor shall restore all parts of the system or equipment used by replacing materials, traps, valves, filters, motors, lamps, and the like to the extent that the Commission considers them to have been damaged or if their usefulness has been impaired or diminished by their temporary use by Contractor.

(9) No part of any surface shall be loaded during construction with more weight than it can safely bear at the time. Should damage occur through violation of this requirement by Contractor, he shall be solely liable for such damage and any consequence.

(10) It shall be Contractor's responsibility to receive and unload his Materials and pay all charges therefor, including, without limitation, demurrage or charges for delays in loading. Contractor shall instruct vendors or Suppliers making such deliveries exactly where they shall go. Contractor shall constantly keep the Commission advised of his Material delivery

schedule and shall update it as required by the Commission so that Materials will be available to complete the Work on time. Contractor shall schedule Material deliveries so as to interfere as little as possible with anyone else's Work on the Project but within the normal Work hours. Contractor shall require that Materials and Equipment delivered shall be identified with Contractor's name, purchase order, and identification numbers. Contractor shall sign for all Materials delivered and shall be responsible for their safekeeping.

GC-20 PROTECTION OF AGREEMENT WORK

Contractor shall be responsible for:

(1) Maintenance and protection of Work until final completion and acceptance, including, but not limited to, the storage of Materials and Equipment, erection of temporary structures and provisions for drainage as necessary to protect Work from injury, damage or loss.

(2) Any injury, damage, or loss to Work resulting from the action of the elements or any other cause, irrespective of fault or negligence, excepting only such injury, damage, or loss as is caused solely by the negligence or willful misconduct of the Commission.

(3) Protection of its Work and materials and the Work and materials of his Subcontractors or Suppliers from damage or injury from the weather.

(4) Exercising due care to avoid injury or damage to the Work of other contractors on site.

Any portion of Work suffering injury, damage, or loss for which Contractor is responsible under 1, 2, 3 or 4, above, will be considered defective and shall be corrected or replaced without additional cost to Commission.

GC-21 DEFECTS IN THE WORK AND UNAUTHORIZED WORK

Contractor shall promptly remove from the premises all Work rejected by the Commission for failure to comply with Agreement Documents, whether incorporated in the construction or not, and Contractor shall promptly replace and re-execute the Work in accordance with the Agreement Documents and without expense to Commission and shall bear the expense of making good all Work of other contractors destroyed or damaged by such removal, or replacement. All removal and replacement Work shall be done at Contractor's expense.

If Contractor defaults or neglects to carry out all or any part of the Work in accordance with the Agreement Documents, and fails within three (3) working days after receipt of Written Notice from the Commission to commence and continue correction and cure of such default, noncompliance, or neglect with diligence and promptness, the Commission may, after twenty-four (24) hours following receipt by Contractor of an additional Written Notice and without prejudice to any other remedy the Commission may have, make good such deficiencies and may further elect to perform and to complete all or any part of Work thereafter through such means as the Commission may select, including the use of a new or supplemental contractor. In such case an appropriate Change Order shall be issued deducting from the payments then or thereafter due Contractor, the cost of correcting such deficiencies. If the payments then or thereafter due Contractor are not sufficient to cover such amount, Contractor shall pay the difference to the Commission on demand.

Minor, inconsequential defects may be waived in writing by the Commission, but the Commission's failure or refusal to exercise such authority shall not be subject to claim by Contractor. If a waiver (whether minor or major, consequential or inconsequential) will result in an appreciable saving of costs to Contractor, including costs of Work in place and savings when compared to potential costs of rejection and replacement under this clause, it will be made only upon an equivalent adjustment in compensation.

GC-22 GUARANTEE OF WORK AND MATERIALS

GC-22.1 Warranty of Materials, Equipment and Work

Contractor warrants to the Commission and the Engineer that all Materials and Equipment furnished under this Agreement will be new and of workmanlike quality unless otherwise specified, and that all Work will be of good quality, free from faults and defects and in conformance with the Agreement Documents. All Work not conforming to these requirements, including substitutions not properly approved and authorized, may be considered defective. If required by the Engineer, Contractor shall furnish satisfactory evidence as to the kind and quality of Materials and Equipment. This warranty is not limited by any other provision of the Agreement Documents. The Warranties set forth in this Article and elsewhere in the Agreement Documents shall survive final acceptance of the Work. All warranties are in addition to the rights, remedies, and redress that the Commission has at law or in equity, and none of Contractor’s warranties shall be deemed a sole or exclusive remedy to the Commission.

GC-22.2 Warranty of Continued Liability of Electronics

Contractor shall warrant to Owner that all goods or equipment which Contractor is required to purchase under the Agreement and which contain embedded codes, chips, microprocessors, microcontrollers, clock circuits (including integrated circuits), computer operating systems, computer software, custom application programming, or other similar systems/technologies that calculate date or time data shall correctly and without

failure, malfunction, or need for operator intervention, display, calculate, compute, and process date or time data before, during, and beyond any changes in the date, including leap year, and including changes at year end, decade end, and century end, as needed.

GC-22.3 Guarantee and Repair

If within one (1) year after the Date of Final Completion and Final Acceptance of the Work by the Commission, or within such longer period of time as may be prescribed by law or by the term of any applicable special warranty required by the Contract Documents, any of the Work is found to be defective or not in accordance with the Agreement Documents, Contractor shall correct it promptly after receipt of a Written Notice from the Commission to do so. This obligation shall survive both final payment for the Work or designated portion thereof and termination of the Agreement. The Commission shall give such notice promptly after discovery of the condition. Contractor acknowledges that this one (1) year period provides a period during which Contractor has a duty to repair and does not in any way limit Contractor's liability for Work that is not in accordance with the Agreement Documents, including any that may be discovered more than one (1) year after the Date of Final Completion and Final Acceptance.

GC-22.4 Manufacturer Warranties

Without limiting the responsibility or liability of Contractor under the Agreement, all warranties given by manufacturers on Materials or Equipment incorporated in the Work are hereby assigned by Contractor to the Commission at no additional cost to the Commission. If requested, Contractor shall execute enforceable formal assignments of said manufacturer's warranties to the Commission at no additional cost to the Commission. Contractor shall not obtain any Materials or Equipment under warranties, which do not run directly to the benefit of the Commission, and all such warranties shall be directly enforceable by the Commission, but Contractor understands and agrees that he is jointly and severally liable with the manufacturers for any warranties provided.

GC-22.5 Non-Exclusive Nature of Warranties

The foregoing warranties, and those contained elsewhere in the Agreement Documents or implied by law, shall be deemed cumulative and not alternative or exclusive. No one or more of them shall be deemed to alter or limit any other.

GC-23 TERMINATION OF AGREEMENT

GC-23.1 Termination for Contractor Default

If Contractor becomes insolvent, or makes a general assignment for the benefit of creditors, or if a receiver is appointed on account of Contractor's insolvency, or if Contractor refuses or fails, except in cases for which extension of time is provided, to

supply enough properly skilled workers or proper Materials, or fails to make prompt payment to Subcontractors or for Materials or labor, or disregards laws, ordinances, rules, regulations or orders of any public authority having jurisdiction, or otherwise is guilty of a material violation of a provision of the Agreement Documents so as to be in material breach and default of the Agreement, then Commission may terminate the Agreement for default, either in whole or in part, without prejudice to any other right or remedy the Commission may have after giving Contractor and its surety seven (7) days to cure the default. For purposes of this Article, a material violation shall include, without limitation, any violation of or failure to comply with any obligation of the Agreement which the Commission, in its sole discretion, determines is likely to result in any damage to the Commission, the Work, or any public or private interest.

If the surety and/or Contractor does not cure the default within seven (7) days from the date of the mailing to Contractor and the surety of notice of default, Commission may, without further notice, terminate for default and may take over Work and prosecute the same to completion by contract or by Force Account or by whatever means it deems appropriate for the account and the expense of Contractor and Contractor and his surety shall be liable to Commission for any excess cost incurred thereby, and in such event Commission may take possession of and utilize in completing Work, such materials, appliances, and plant as may be on the Site of Work and necessary therefore. Upon such termination Contractor shall:

(1) Preserve all Materials, Drawings and records and Plans at Site of the Work until notified in writing of those items that will be used in completing Work.

(2) Remove from Site of the Work all construction materials, equipment and plant not designated for use in such notice.

(3) Assist the Commission in making an inventory of all Materials and Equipment in storage at the Site of Work, in route to the Site of Work, in storage or manufactured at other locations, and on order from Suppliers.

The Commission shall further have the right to declare a default without terminating the Agreement for default in whole or in part. In such event, the Commission shall have the right, at its sole discretion, to supplement Contractor's forces if the Commission so chooses and deduct the cost of same from the amounts otherwise due Contractor. The Commission's failure to declare a default or terminate the Agreement in whole or in part shall not determine whether Contractor is, in fact, in material breach of the Agreement because the Commission shall also have the option to allow Contractor's defective performance to continue and collect such damages as the Commission may incur from Contractor and its surety.

In the event that the Commission incurs costs or expenses in performing or completing any portion of Contractor's scope of Work, the Commission's actual damages shall, at the Commission's discretion, include a fee up to 15% of such actual costs for

performing such work. Such fee shall be computed on the actual costs incurred by the Commission for labor, materials, equipment, services, administrative and personnel costs and additional design and professional consulting fees, incurred as a result of Contractor's default.

Contractor acknowledges and agrees that an appropriate termination for default is adequate grounds for Contractor's disqualification from future Commission contracts. This provision shall survive the expiration or termination of this Agreement and any amendments to this Agreement.

In the event any termination for default is found to be wrongful or improper, Contractor agrees that its sole and exclusive remedy is to have the termination treated as a termination for convenience in accordance with the provisions of this Agreement.

GC-23.2 Commission's Right to Stop the Work

If Contractor fails to correct defective Work as required by the Agreement Documents, or fails to carry out the Work or supply labor or Materials in accordance with the Agreement Documents, or otherwise fails to meet or satisfactorily complete any of its obligations under this Agreement, the Commission, in writing, may order Contractor to stop the Work, or any portion thereof, until the cause for such order has been eliminated; however, this right of the Commission and the Engineer to stop the Work shall not give rise to any duty on the part of the Commission to exercise this right for the benefit of Contractor or any other person or entity. Contractor shall not be entitled to any extension of time or for compensation of any sort in the event that the Commission stops work pursuant to this provision.

GC-23.3 Intentionally Omitted

GC-23.4 Termination for Convenience of Commission

GC-23.4.1

The Commission may, at any time upon ten (10) days Written Notice to Contractor, terminate (without prejudice to any right or remedy of the Commission) the whole or any portion of the Work for the convenience of the Commission.

GC-23.4.2

If, after Contractor has been terminated for default, it is determined that Contractor was not in default or that the termination for default was improper for any reason, then such termination shall be considered a termination for convenience.

GC-23.4.3

If the Commission terminates the whole or any portion of the Work for convenience, then the Commission shall only be liable to Contractor for those costs reimbursable to Contractor in accordance with Article 23.4.4; provided, however, that if it reasonably appears to the Commission that Contractor would have sustained a loss on the entire Agreement had it been completed, no profit shall be included or allowed hereunder and an appropriate adjustment shall be made reducing the amount of settlement so that Contractor's loss on the portion of the Agreement it did perform is proportioned, from a percentage completion basis, to the loss Contractor would have sustained on the entire Agreement. In no event shall Contractor be entitled to anticipated profit on work not performed. Contractor shall, however, be entitled to any profit earned on the work performed to date, but Contractor acknowledges (1) that unit rates may be subject to adjustment, either upward or downward, based upon the variation in estimated quantity provisions of this Agreement, and (2) if the Commission determines that Contractor's schedule of values was materially unbalanced (or "front-end loaded"), payments previously made to Contractor shall be refunded to the Commission or withheld from amounts otherwise due Contractor. The intent of this Article is to avoid any Contractor windfall at the Commission's expense while at the same time preserving the benefit of the bargain, either positive or negative, for Contractor.

GC-23.4.4

If the Commission terminates the whole or any portion of the Work for convenience, the Commission shall pay Contractor the amounts determined by the Engineer as follows:

(1) To the extent not previously paid for, Contractor shall be paid on a percentage completion basis in accordance with any approved schedule of values for the value of the work completed to date, including items such as mobilization and general conditions costs (based on percent complete).

(2) To the extent not previously paid for and to the extent that the Agreement Documents call for payment on the basis of unit rates, Contractor shall be paid for all work actually performed at the unit rate established in the Agreement Documents, with such adjustment, if any, as may be required either upward or downward by the variation in estimated quantity provisions applicable to unit rates under the Agreement.

(3) The reasonable costs of settlement, including accounting, clerical, and other expenses reasonably necessary for the preparation of settlement claims and supporting data with respect to the terminated portion of the Agreement and for the termination and settlement of subcontracts thereunder, together with reasonable storage, transportation, and other

costs incurred in connection with the protection or disposition of property allocable to this Agreement. This amount shall not include any attorneys' fees or other legal costs or claim preparation costs or expert or consulting fees, and Contractor shall not be entitled to recovery or compensation of any such costs or fees under any circumstances.

GC-23.4.5

Contractor shall specifically require its Subcontractors and suppliers and those with whom they contract to agree to the provisions of this Article governing termination for convenience. In no event shall the Commission be responsible for anticipated profit on work not performed or "restocking charges." The Commission's potential liability for convenience termination costs shall be based on work actually performed and costs actually incurred, provided that the termination shall not in any event transform a Contractor or Subcontractor's probable net loss position into a profitable or "cost plus" recovery.

GC-23.5 General Termination Provisions

GC-23.5.1

If the Commission terminates the whole of any part of the Work for default, then the Commission may procure, upon such terms and in such manner as the Commission may deem appropriate, supplies or services similar to those so terminated, and Contractor shall be liable to the Commission for any excess costs for such similar supplies or services. Contractor shall continue the performance of this Agreement to the extent not terminated hereunder.

GC-23.5.2

In the event of a Contractor default under any of the provisions of the Agreement, after written notice and a failure to cure within seven (7) days of that notice, Contractor and its surety shall be responsible to pay to the Commission such reasonable attorneys' fees as the Commission may expend as a result of the default, including all costs, expenses and filing fees incidental thereto, including, without limitation, expert fees, consultants' fees, arbitrator fees (if any), and prejudgment interest at the commercial account rate on all sums due, whether liquidated or unliquidated. Any judgment or arbitration award entered in favor of the Commission against Contractor or its surety shall bear interest from the time of entry of the judgment or the date of the arbitration award at the commercial account rate.

GC-23.5.3

After receipt of a notice of termination from the Commission, whether for default or for convenience, and except as otherwise directed by the Commission, Contractor shall:

(1) Stop Work under the Agreement on the date and to the extent specified in the notice of termination;

(2) Place no further orders or subcontracts for Materials, services, or facilities, except as may be necessary for completion of such portion of the Work under the Agreement as is not terminated;

(3) Terminate all orders and subcontracts to the extent that they relate to the performance of Work terminated by the notice of termination and are not assigned as set forth below;

(4) If so requested by the Commission, assign to the Commission in the manner, at the times and to the extent directed by the Commission, all of the rights, title, and interest of Contractor under the orders and subcontracts so selected and requested for assignment;

(5) Settle all outstanding liabilities and all claims arising out of such termination of orders and subcontracts, with the approval or ratification of the Commission to the extent the Engineer may require, in accordance with the provisions of this Agreement;

(6) Transfer title and deliver to the entity or entities designated by the Commission, in the manner, at the times and to the extent, if any, directed by the Commission, and to the extent specifically produced or specifically acquired by Contractor for the performance of such portion of the Work as had been terminated:

    (a) The fabricated or unfabricated parts, Work in progress, partially completed supplies, and Equipment, Materials, parts, tools, dies, jigs, and other fixtures, completed Work, supplies and other material produced as part of, or acquired in connection with the performance of the Work terminated by the notice of termination; and

    (b) The completed or partially completed Plans, Drawings, information, and other property related to the Work, including as-built information;

(7) If so requested by the Commission, use his best efforts to sell for the benefit of the Commission, in the manner, at the times, to the extent, and at the price or prices directed or authorized by the Commission, any

property of the types referred to in Article GC-23.5.3(6); provided, however, that Contractor:

(a) Shall not be required to extend credit to any buyer; and

(b) May re-acquire any such property under the conditions prescribed by and at a price or prices approved by the Commission; and, provided, further that the proceeds of any such transfer or disposition shall be applied in reduction of any payments to be made by the Commission to Contractor under this Agreement or shall otherwise be credited to the price or cost of the Work covered by this Agreement or paid in such other manner as the Commission may direct;

(8) Complete performance of such part of the Work as shall not have been terminated by the notice of termination; and

(9) Take such action as may be necessary, or as the Commission may direct, for the protection and preservation of the property related to the Agreement, which is in the possession of Contractor and in which the Commission has or may acquire an interest.

GC-23.5.4

Contractor shall preserve and make available to the Commission, at all reasonable times at the office of Contractor, but without direct charge to the Commission, all its books, records, documents and other evidence bearing on the costs and expenses of Contractor and any Subcontractor or Supplier under the Agreement, and any photographs, microphotographs, or other authentic reproductions thereof and Owner shall have the right at any time to audit the same.

GC-23.5.5

In arriving at any amount due Contractor for any termination for default or convenience, there shall be deducted:

(1) All unliquidated advance or other payments on account theretofore made to Contractor applicable to the termination portion of this Agreement;

(2) Any claim which the Commission may have against Contractor;

(3) Such claim as the Engineer determines to be necessary to protect the Commission against loss because of outstanding or potential claims of any type or nature; and

(4) The agreed price for, or the proceeds of sale of, any Materials, supplies, or other things acquired by Contractor or sold, pursuant to the provisions of Article GC-23.5.3(7) and not otherwise recovered by or credited to the Commission.

GC-23.5.6

Contractor shall refund to the Commission any amounts paid by the Commission to Contractor in excess of Contractor's entitlement specified hereunder.

GC-23.5.7

The Commission may, at its option, have costs audited and certified by independent certified public accountants selected by the Commission.

GC-23.5.8

Contractor shall be entitled to only those damages and that relief from termination by the Commission as specifically provided hereunder.

GC-24 SUSPENSION OF WORK

GC-24.1 Right to Suspend Work

The Commission may order Contractor, in writing, to suspend, delay, or interrupt all or any part of the Work for such period of time as the Commission may determine to be appropriate for the convenience of the Commission.

GC-24.2 Rights Upon Certain Unreasonable Suspensions

If the performance of the Work is, for an unreasonable period of time, suspended, delayed, or interrupted by an act of the Commission or Engineer in the administration of the Agreement, or by failure of any one of them to act within the time specified in the Agreement (or if no time is specified, within a reasonable time), or by any act of either of them which is attributable to their fault or neglect, adjustment shall be made in the Agreement Time only for any extension in the time required for performance of the Work necessarily caused by such unreasonable suspension, delay, or interruption and the Agreement modified in writing accordingly. However, no adjustment shall be made under this Article for any suspension, delay, or interruption for which an adjustment is

provided or excluded under any other provision of the Agreement Documents, and no adjustment shall be made to the extent that performance would have been so suspended, delayed or interrupted by any other cause, including the fault or negligence of Contractor or excusable delays that are unforeseeable and not attributable to the fault or neglect of the Commission or Contractor and beyond the control of each of them. No claim for a time adjustment under this Article shall be allowed unless it is presented in accordance with the provisions of the Agreement governing Claims and compliance with the claims provision shall be a condition precedent to the right to a time adjustment.

GC-24.3 Damages Upon Suspension

Nothing contained in this Article authorizes the recovery of delay or impact damages, except as expressly authorized in this Agreement; and compliance by Contractor with the claims provision shall be a condition precedent to the right to any Contract adjustment on account of a suspension of the Work. Contractor expressly agrees that it shall not be entitled to any increase in the Agreement Price or to any monetary damages on account of a suspension, delay, interruption, interference or impact, unless the notice, documentation, and pricing requirements of this Agreement have been met.

GC-24.4 Time Extension Upon Suspension

Under the terms of this Agreement, in order for Contractor to receive extensions of time for excusable delays the delays must (i) be on the critical path, (ii) be beyond the reasonable control of Contractor and those for whom it is responsible including its Subcontractors and Suppliers and others working by or through them, (iii) not be attributable to any factor for which Contractor has assumed the risk of performance (such as labor availability), (iv) not be attributable in whole or in part to Contractor's fault or neglect or the fault or neglect of those for whom Contractor is responsible, including Subcontractors and Suppliers and others working by or through them, and (v) not be concurrent with non-excusable delays that are on the critical path. If Contractor meets these five (5) requirements, then Contractor's sole remedy for such delay shall be an extension of the Agreement Time for the period of time during which all five (5) elements continue to be met, which shall be implemented by Change Order; provided, however, Contractor shall not be entitled to any extension of the Agreement Time (i) if Contractor fails to comply with notice requirements in the Contract, (ii) if such delays do not cause Contractor to achieve Substantial Completion of the entire Work later than the then current Substantial Completion Date, or (iii) if Contractor fails to work around such delay where such work around was available to Contractor. In all events, Contractor must comply with the notice and claim provisions set forth in this and other provisions of the Agreement in order to be entitled to any extension of the Agreement Time.

GC-24.5 Damages for Non-Excusable Delays

Under the terms of this Agreement, liquidated or actual damages (as specified in the Agreement and as appropriate) shall be assessed for all non-excusable delays. Unless and until Contractor satisfies its obligations under and satisfies all criteria set forth in

GC-24.4, delays shall be deemed non-excusable. The burden of proof shall be upon Contractor to establish that delays and untimely completion are attributable to excusable delays.

GC-24.6 Abnormal Weather

Abnormal weather may constitute an excusable delay if other requirements for excusable delays are met (for example, weather-sensitive work must be on the critical path.) The Agreement Time will not, however, be extended due to normal inclement weather. Unless Contractor can substantiate that there was greater than normal inclement weather using a ten (10) year average of accumulated record mean values from climatological data compiled by the U.S. Department of Commerce, National Oceanic and Atmospheric Administration for Atlanta, Georgia, and that such alleged greater than normal inclement weather qualifies as excusable delay as set forth above, Contractor shall not be entitled to an extension of time. In no event will “dry-out” delay days be allowed. Any time extension shall be based on the number of additional days of adverse weather and not upon the time required to recover from said weather.

GC-24.7 Impacts From Adjacent Property

Contractor acknowledges and agrees that it will be interacting with numerous citizens and residents of the Commission and will be working in close proximity to their homes, businesses, and private property. Contractor warrants that it has made due allowance for dealing with the concerns and complaints of these citizens and residents and any delays, interruptions, interferences, disruptions, or other impacts resulting therefrom. Contractor further warrants and agrees that it will fully cooperate with the Commission to minimize the adverse affects of the Project on the Commission’s residents by resequencing work or adjusting its means, methods, techniques, and procedures to minimize and mitigate the effect upon the Commission’s residents and that the cost of these mitigation efforts has been included in Contractor’s price to the Commission.

GC-25 COMMENCEMENT AND PROSECUTION OF THE WORK

Contractor shall, within ten (10) days after receipt from the Commission of a written Notice to Proceed, commence Work to be done under this Agreement. Contractor shall diligently prosecute Work and all portions thereof to completion within the times specified therefor. The capacity of Contractor's construction and manufacturing equipment and plans, sequence and methods of operations, and forces employed, including management and supervisory personnel, shall be such as to ensure completion of Work within the specified time.

It is expressly understood and agreed by and between Contractor and Commission that Agreement Time for the completion of Work described herein is a reasonable time, taking into consideration the unique requirements of the Work (including performance of the Work in close proximity to the private property of the citizens and residents of the

Commission), the average climate and economic conditions in the area, and other factors prevailing in the locality of the Work (such as, without limitation, the availability of labor, equipment and material).

GC-26 TIME

GC-26.1 Progress and Completion

GC-26.1.1

All time limits stated in the Agreement Documents are of the essence of the Agreement.

GC-26.1.2

Contractor shall begin the Work within ten (10) days after the issuance of written Notice to Proceed. Contractor shall carry the Work forward expeditiously with adequate forces and shall achieve Substantial Completion of the Work and Final Completion within the times stated in the Agreement Documents.

GC-26.2 Delay, Damages, and Extensions of Time

GC-26.2.1

Contractor shall not be entitled to payment or compensation of any kind from the Commission for direct, indirect, impact, or delay damages, including but not limited to costs of delay, disruption, interference, impact or hindrance from any cause whatsoever, whether such delay, disruption, interference, impact or hindrance be reasonable or unreasonable, foreseeable or unforeseeable, or avoidable or unavoidable, except as expressly provided in this Agreement.

In any and all events, the Commission's liability for damages for delay, disruption, interference, impact or hindrance shall be limited to the following actual direct job site related costs that are solely incurred as a function of time: (1) costs of job site supervision, (2) direct cost of general conditions items, including job site office expenses for trailer rental, telephone, electricity, heat, and water, (3) except for tunnel boring machines which shall be governed by the terms of GC-41.6, equipment expenses at the Force Account rates specified in the provisions of this Agreement governing changes; and (4) a markup for profit and overhead on actual direct costs, in accordance with the Force Account rates specified in the provisions of this Agreement governing changes.

GC-26.2.2

The Agreement Time shall be adjusted only for excusable delays. In the event Contractor requests an extension of the Agreement Time, he shall furnish such justification and supporting evidence as the Commission may deem necessary for a determination as to whether Contractor is entitled to an extension of time under the provisions of the Agreement. The Commission, after receipt of such justification and supporting evidence, shall make a decision thereon and shall advise Contractor in writing thereof. If the Commission finds that Contractor is entitled to any extension of the Agreement Time, the Commission's determination as to the total number of days' extension shall be based upon the current CPM and on all data relevant to the extension as described in the Agreement Documents. Contractor acknowledges and agrees that delays in activities that according to the approved and current CPM Schedule do not affect the critical path do not have any effect upon the Agreement Time and therefore will not be the basis for a change thereof.

GC-26.2.3

Under the terms of this Agreement, in order for Contractor to receive extensions of time for excusable delays the delays must (i) be on the critical path, (ii) be beyond the reasonable control of Contractor and those for whom it is responsible including its Subcontractors and Suppliers and others working by or through them, (iii) not be attributable to any factor for which Contractor has assumed the risk of performance (such as labor availability), (iv) not be attributable in whole or in part to Contractor’s fault or neglect or the fault or neglect of those for whom Contractor is responsible, including Subcontractors and Suppliers and others working by or through them, and (v) not be concurrent with non-excusable delays that are on the critical path. If Contractor meets these five (5) requirements, then Contractor’s sole remedy for such delay shall be an extension of the Agreement Time for the period of time during which all five (5) elements continue to be met, which shall be implemented by Change Order; provided, however, Contractor shall not be entitled to any extension of the Agreement Time (i) if Contractor fails to comply with notice requirements in the Contract, (ii) if such delays do not cause Contractor to achieve Substantial Completion of the entire Work later than the then current Substantial Completion Date, or (iii) if Contractor fails to work around such delay where such work around was available to Contractor. In all events, Contractor must comply with the notice and claim provisions set forth in this and other provisions of the Agreement in order to be entitled to any extension of the Agreement Time.

GC-26.2.4

Under the terms of this Agreement, liquidated or actual damages (as specified in the Agreement and as appropriate) shall be assessed for all non-excusable delays. Unless and until Contractor satisfies its obligations under and satisfies all criteria set forth in GC-26.2.3, delays shall be deemed non-excusable. The

burden of proof shall be upon Contractor to establish that delays and untimely completion are attributable to excusable delays.

GC-26.2.5

Abnormal weather may constitute an excusable delay if other requirements for excusable delays are met (for example, weather-sensitive work must be on the critical path). The Agreement Time, however, will not be extended due to normal inclement weather. Unless Contractor can substantiate to the satisfaction of the Commission that there was greater than normal inclement weather using a ten (10) year average of accumulated record mean values from climatological data compiled by the U.S. Department of Commerce, National Oceanic and Atmospheric Administration for Atlanta, Georgia, and that such alleged greater than normal inclement weather actually delayed the Work or portions thereof which had an effect upon the Agreement Time, Contractor shall not be entitled to an extension of time. In no event will “dry-out” delay days be allowed. Any time extension shall be based solely on the number of additional days of adverse weather and not upon the time required to recover from said weather.

GC-26.2.6

Contractor acknowledges and agrees that it will be interacting with numerous citizens and residents of the Commission and will be working in close proximity to their homes, businesses, and private property. Contractor warrants that it has made due allowance for dealing with the concerns and complaints of these citizens and residents and any delays, disruptions, interferences, impacts or hindrances resulting therefrom. Contractor further warrants and agrees that it will fully cooperate with the Commission to minimize the adverse affects of the Project on the Commission’s residents by resequencing work or adjusting its means, methods, techniques, and procedures to minimize and mitigate the effect upon the Commission’s residents and that the cost of these mitigation efforts has been included in Contractor’s price to the Commission.

GC-26.2.7

In order for Contractor to be entitled to any extension of the Agreement Time, Contractor must comply with the Claim provisions of GC-41 and GC-26. Such statement of the claim, in addition to complying with all other provisions of the Agreement relating to Claims and delays, must provide all information required by the scheduling requirements of the Agreement Documents and further provide the following specific information:

(1) Nature of the delay;

(2) Date (or anticipated date) of commencement of delay;

(3) Activities on the approved current CPM Schedule affected by the delay, and/or new activities created by the delay and their relationship with existing activities;

(4) Identification of person(s) or organization(s) or event(s) responsible for the delay;

(5) Anticipated extent of delay; and

(6) Recommended action to avoid or minimize the delay.

GC-26.2.8

The Commission shall receive and process such claims for extensions of time in accordance with the procedures set forth in Article GC-41, except that any Change Order issued shall only amend the time for completion.

GC-26.2.9

The failure of Contractor to file any claims for extension of time within the time limits prescribed and in the form and manner required shall be deemed a material prejudice to the interests of the Commission in canceling and mitigating such impacts, and shall constitute an absolute waiver of the claim and the right to file or thereafter prosecute the same. The purpose of the time limits, notice and form and manner requirements are, in part, to eliminate disputes over the existence, scope, and nature of events giving rise to claims, and the failure to abide by same will result in material prejudices to the Commission, even if the Commission were otherwise on notice of facts giving rise to the claim because, in part of the impact to the Commission's ability to document, dispute, or resolve issues as they arise, and also because of the impact to the Commission's efforts to entirely avoid disputes over claims not asserted in accordance with the Agreement Documents.

GC-26.2.10

If no schedule or agreement is made stating the date upon which written interpretations as set forth in the Agreement Documents shall be furnished, then no claim for delay shall be allowed on account of failure to furnish such interpretations until fifteen (15) days after demand is made for them, and not then unless such claim is reasonable.

GC-27 RESPONSIBILITY FOR COMPLETION

GC-27.1 Duty to Accelerate

Subject to the other provisions of the Agreement Documents, Contractor shall furnish such manpower, Materials, facilities, and Equipment and shall work such hours, including night shifts, overtime operations and Sunday and holidays, as may be necessary to ensure the prosecution and completion of the Work in accordance with the approved and currently-updated CPM Schedule. If Work actually in place falls behind the currently updated and approved CPM Schedule, and it becomes apparent from the current approved CPM Schedule that the Work will not be completed within the Agreement Time, Contractor agrees that it will, as necessary or as directed by the Commission, take some or all of the following actions at no additional cost to the Commission to improve its progress:

(1) Increase manpower in such quantities and crafts as will eliminate, in the judgment of the Commission, the delay and backlog of Work;

(2) Increase the number of working hours per shift, shifts per working day, working days per week, the amount of equipment or any combination of the foregoing, sufficiently to eliminate in the judgment of the Commission, the delay and backlog of Work;

(3) Reschedule activities as necessary to eliminate in the judgment of the Commission the delay and backlog of Work; and

(4) Any other measure required by the schedule requirements of the Special Conditions.

In addition, the Commission may require Contractor to submit a proposed revised CPM Schedule Recovery Plan demonstrating its program and proposed plan to make up lag in scheduled progress and to ensure completion of the Work within the Agreement Time. If the Commission finds the proposed plan not acceptable, the Commission may require Contractor to submit a new and/or revised plan with direction and other input from the Commission and Engineer.

GC-27.2 Recoverable Acceleration Expenses

In the limited and exclusive event that (1) the Commission directs Contractor to accelerate, and (2) it is subsequently determined that Contractor was entitled to time extensions for excusable delays which the Commission failed or refused to grant, and (3) Contractor in fact succeeds in accelerating substantial completion of the Project by substantially completing the Project significantly and materially sooner than what would have been the case had the Commission granted all time extensions to which Contractor was entitled, then, and only then, Contractor may be entitled to recoverable

acceleration expenses as defined below if Contractor properly and timely complies with the provisions related to time, notice and form and substance of claims of the Agreement (including, without limitation, Articles GC-24, GC-26, and GC-41) Recoverable acceleration expenses shall be limited to the following without any markup for overhead and profit:

(1) the premium portion only of overtime costs for hours worked in a single week that exceed 40 hours per week

(2) if the overtime continues for more than 65% of the skilled labor on the site (including subcontractor personnel) for a continuous period of 8 weeks or more, then beginning in the 9th week, a multiplier of 10% of the premium portion of the overtime costs may be added as recoverable acceleration expenses to cover the cost of any loss or damage or additional expense resulting from the acceleration.

No expenses other than the two items noted above shall be allowed as recoverable acceleration expenses. No claims for acceleration for work that is not on the critical path shall be permitted.

GC-27.3 Acceleration by Commission's Forces

Failure of Contractor to substantially comply with the requirements of Article GC-27.1 may be considered grounds for a determination by the Commission and/or the Engineer that Contractor is failing to prosecute the Work with such diligence as will ensure its completion within the time specified. In such case, upon forty-eight (48) hours prior Written Notice to Contractor, Commission shall have the right to furnish such additional labor and Materials as may be required to comply with the schedule, and Contractor shall be liable for such costs incurred by Commission as provided elsewhere in this Agreement.

GC-27.4 Set-Off of Acceleration Costs

Any monies due to the Commission under this Article may be set-off by the Commission against monies due from the Commission to Contractor.

GC-27.5 Acceleration Remedies Cumulative

The remedies of the Commission set out in this Section are in addition to, and without prejudice to, all other rights and remedies of the Commission including those stated elsewhere in the Agreement Documents. The remedies of Contractor, however, are sole and exclusive and contingent upon compliance with the Agreement provisions as to time, notice, form, and substance of Claims, including, without limitation, Articles GC-24, GC-26, and GC-41.

GC-28 WORKING DRAWINGS, SHOP DRAWINGS, DATA ON MATERIAL AND EQUIPMENT, SAMPLES, AND LICENSES

GC-28.1 General

GC-28.1.1

Contractor shall submit to the Engineer for review and exception, if any, such working Drawings, Shop Drawings, test reports and data on Materials, licenses, and Equipment (hereinafter in this article called data), and material samples (hereinafter in this article called samples) as are required for the proper control of Work, including but not limited to, those working Drawings, Shop Drawings, data and samples specifically required elsewhere in the Specifications and Agreement Documents. Submittals are required for any product that becomes a part of, or affects, the permanent Work.

GC-28.1.2

Data on Materials and Equipment include, without limitation, Materials and Equipment lists, catalog data sheets, cuts, diagrams and similar descriptive material. Materials and Equipment lists shall give, for each item thereon, the name and location of the Supplier or manufacturer, trade name, catalog reference, size, finish and all other pertinent data.

GC-28.1.3

It is the duty of Contractor to check all Drawings, data and samples prepared by or for him before submitting them for review. Drawings and schedules shall also be checked and coordinated with the Work of all trades involved. Drawings and other submittals originating from Subcontractors will be reviewed and checked similarly by Contractor. Pursuant to this required review, Contractor shall indicate his approval, before they are submitted for review by the Commission, by affixing his stamp of approval, properly initialed and dated. All submittals shall be referenced to the applicable item, section or division of the Specifications.

GC-28.1.4

The Engineer's review of Drawings, data and samples submitted by Contractor will cover only general conformity to the Specifications, external connections, and dimensions which affect the installation. The Engineer's review and exception, if any, will not constitute an approval of dimensions, quantities, and details of the Material, Equipment, device, or item shown.

GC-28.1.5

Contractor shall not begin any of the Work covered by a Drawing, data, or a sample returned for correction until a revision or correction thereof has been reviewed and returned to him.

GC-28.1.6

The CPM Schedule shall include respective dates for the submission of shop and work Drawings, the beginning of manufacture, testing, and installation of Materials, Supplies, and Equipment.

GC-28.1.7

Acceptable submittals will be marked "No Exceptions Taken." Submittals requiring minor corrections before the Material or Equipment is acceptable will be marked "Make Corrections Noted." Contractor may order, fabricate, or ship the items included in the submittal, provided the indicated corrections are made. Drawings must be resubmitted for review prior to installation of Equipment or use of Materials.

GC-28.1.8

Submittals marked "Amend and Resubmit" must be revised to reflect required changes, and the initial review procedure repeated.

GC-28.1.9

The "Rejected - See Remarks" notation is used to indicate Materials or Equipment that are not acceptable. Upon return of a submittal so marked, Contractor shall repeat the initial review procedure utilizing acceptable Materials or Equipment.

GC-28.1.10

Drawings on other submittals not bearing the Engineer's "No Exceptions Taken" notation shall not be issued to Subcontractors or utilized for construction purposes. No Work shall be done or equipment installed without a drawing or submittal bearing the "No Exceptions Taken" notation. Contractor shall maintain at the job site a complete set of Drawings and other submittals bearing the Engineer's stamp.

GC-28.1.11

In the event Contractor obtains the Commission's approval for the use of equipment other than that which is called for in the Agreement Documents,

Contractor shall, at his own expense and using methods approved by the Commission, make any changes to structures, piping and electrical work that may be necessary to accommodate this equipment. If Contractor substitutes any specified item of Material or Equipment with another item of Contractor's choosing as an "or equal" item, Contractor warrants the accuracy and adequacy of the design and performance of the substituted item and further warrants that it has exercised due diligence to ensure that the substituted item will function properly as a component into the integrated Project of which it is a part.

GC-28.1.12

Contractor shall submit all Drawings and schedules sufficiently in advance of construction requirements to provide no less than thirty (30) calendar days for checking and appropriate action.

GC-28.1.13

The review of Drawings and schedules will be general, but approval shall not be construed: (a) as permitting any departure from the Agreement requirements; (b) as relieving Contractor of responsibility for any errors, including details, dimensions, and Materials; and (c) as approving departures from details furnished by the Commission, except as otherwise provided herein.

GC-28.2 Shop Drawings

GC-28.2.1

When used in the Agreement Documents, the term "Shop Drawings" shall be considered to mean fabrication drawings, wiring and control diagrams, cuts, or entire catalogs, pamphlets, descriptive literature, and performance and test data. The Drawings shall be submitted using standard transmittal forms in accordance with detailed instructions furnished by the Commission. A separate transmittal sheet shall be used for reference to each item, section or division of the Specifications.

GC-28.2.2

Contractor shall submit six (6) sets of each Shop Drawing for review. On electrical and instrumentation and control submittals Contractor shall submit seven (7) copies of each for review.

GC-28.2.3

Each Shop Drawing shall include the following:

(1) Number and title of the submittal;

(2) Date of Drawing or revision;
(3) Name of Project;
(4) Name of Contractor and/or Subcontractor submitting Drawing and with its seal of approval;
(5) Specification title and number; and
(6) Clear identification of contents and location of the Work.

GC-28.2.4

Drawings for Work on utility facilities, streets and other facilities, which are constructed for owners other than the Commission, shall be coordinated so that information required by these owners is included on the Shop Drawings for their facilities.

GC-28.2.5

If Drawings show variations from Agreement requirements, Contractor shall describe such variations in his letter of transmittal. If acceptable, proper adjustment in Agreement shall be implemented where appropriate. If Contractor fails to describe such variations, he shall not be relieved of the responsibility for executing the Work in accordance with Agreement, even though such Drawings have been reviewed.

GC-28.2.6

If the Drawings or schedules as submitted describe variations and show a departure from the Agreement requirements which the Commission finds to be in the interest of the Commission and to be so minor as not to involve a change in Agreement Price or Time, the Commission may return the reviewed Drawings without noting an exception.

GC-28.2.7

If no exceptions are taken by the Commission, each of the Shop Drawings will be identified by being so stamped and dated. Shop Drawings stamped "Rejected - See Remarks" and with required corrections shown, will be returned to Contractor for correction and re-submittal. On re-submittals, Contractor shall direct specific attention, in writing or on resubmitted Drawings, to revisions other than the corrections requested by the Commission on previous submissions. Contractor shall make any corrections required by the Commission. If Contractor considers any correction indicated on the drawings to constitute a change to the Agreement Drawings or Specifications, Contractor shall give Written Notice thereof to the Commission in accordance with GC-41. At least two (2) copies of Drawings or data submittals will be returned to Contractor.

GC-28.2.8

When the Drawings or data submittals have been completed to the satisfaction of the Commission, Contractor shall carry out the construction in accordance therewith and shall make no further changes therein except upon written instructions from the Commission.

GC-28.2.9

After final review in which there are no exceptions noted or referenced, and before final payment is made, Contractor shall furnish to the Commission two (2) sets of record Shop Drawings, all clearly revised and completed and brought up to date, showing the permanent construction as actually made and marked FINAL/AS-BUILTS. One (1) set of such Shop Drawings shall be either drawn in ink on tracing cloth, or reproduced on mylar from which clear prints can be made. The other set could be a complete paper print.

GC-28.2.10

Contractor shall be responsible for and bear all cost of damages which may result from the ordering of any Material or from proceeding with any part of Work prior to the review, without exception, by the Commission of the necessary Shop Drawings.

GC-28.3 Working Drawings

GC-28.3.1

When used in the Agreement Documents, the term "Working Drawings" shall be considered to mean Contractor's plans, including a detailed narrative, for temporary structures such as temporary bulkheads, support of open cut excavation, support of utilities, ground water control systems, forming and false work; for underpinning; and for such other work as may be required for construction but does not become an integral part of the Project.

GC-28.3.2

Copies of Working Drawings shall be submitted to the Commission where required by the Agreement Documents or requested by the Commission and shall be submitted at least thirty (30) calendar days in advance of their being required for Work.

GC-28.3.3

Working Drawings shall be signed and sealed by an engineer licensed to practice in the State of Georgia and shall convey, or be accompanied by, calculation of

other sufficient information to completely explain the structure, machine, or system described and its intended manner of use. Prior to commencing such Work, Working Drawings must have been reviewed to the satisfaction of the Commission, and each Working Drawing identified by the Commission with the Engineer's stamp of "No Exception Taken." Review of the Working Drawings by the Engineer will not relieve Contractor in any way from his responsibility with regard to the fulfillment of the terms of Agreement. All risks of error are assumed by Contractor: The Commission and the Engineer shall have no responsibility therefor.

GC-28.4 Record Agreement Drawings

Contractor shall keep at least one (1) record copy of all Agreement Documents, reference documents, and all technical submittals at the Site in good order and annotated to show all changes made during the construction process. Record drawings shall be updated and kept current on a monthly basis by Contractor. The record drawings will be reviewed monthly by the Engineer prior to approval of Contractor's monthly pay request. At the completion of the Project and before final payment is made, Contractor shall furnish the Engineer and the Commission each with two (2) sets of reproducible documents, reflecting all changes herein. These "as-built" plans of the Work, shall be satisfactory to the Engineer, and will be provided at Contractor's expense within thirty (30) days following Substantial Completion of the Work or any portion thereof. The provision of such as-built documents satisfactory to the Engineer shall be an express condition precedent to final payment. Changes to the reproducible drawings shall be drafted in a neat and workmanlike manner similar to the drawings as originally provided to Contractor. Upon request, the Engineer will provide one (1) set of reproducibles of the original Agreement Drawings, at no cost, to Contractor within two weeks subsequent to the execution of this Agreement.

GC-28.5 Samples

GC-28.5.1

Contractor shall furnish at no additional cost, for the approval of the Commission, samples required by the Agreement Documents or requested by the Commission. Samples shall be delivered to the Commission as specified or directed. Contractor shall prepay all shipping charges on samples. Materials or Equipment for which samples are required shall not be used in Work until approved by the Commission.

GC-28.5.2

Each sample shall have a label indicating:

(1) Name of Project;
(2) Name of Contractor and Subcontractor;

(3) Material or Equipment Represented;
(4) Place of Origin;
(5) Name of Producer and Brand (if any); and
(6) Location in Project.

GC-28.5.3

Contractor shall prepare a transmittal letter in triplicate for each shipment of samples containing the information required in Article B above. He shall enclose a copy of this letter with the shipment and send a copy of this letter to the Commission. Approval of a sample shall be only for the characteristics or use named in such approval and shall not be construed to change or modify any Agreement requirement. Substitutions will not be permitted unless they are considered to be to the Commission's best interest.

GC-28.5.4

Approved samples not destroyed in testing shall be sent to the Commission or stored at the Site of the Work. Approved samples of the hardware in good condition will be marked for identification and may be used in the Work. Materials and Equipment incorporated in the Work shall match the approved samples. Samples which failed testing or were not approved will be returned to Contractor at its expense if so requested at time of submission.

GC-28.5.5

Contractor will provide architectural samples to the Commission in a composite color board format for review and color coordination. These samples shall be of the precise Material and color specified and of sufficient size for comparison to other material samples.

GC-28.5.6

Custom colors and coatings may be required to complete the Project within acceptable architectural standards. Contractor shall comply with the Architect's selection and provide Materials that precisely match the approved samples.

GC-28.6 Operation and Maintenance Manuals

GC-28.6.1

Operation and maintenance manuals are operator and shop maintenance instructions that enable an average journeyman mechanic without prior knowledge of the specific type, make, or model to maintain and repair the Equipment. The manuals shall include repair parts data that provides positive identification for an item of the complete Equipment without reference to the

manufacturer or dealer facilities to identify ordering part numbers in support of procured Equipment.

GC-28.6.2

Preparation Instructions: An operation and maintenance manual set is required to cover each specific make, model, year and serial numbered piece of Equipment scheduled for delivery under terms of this Agreement. It is the intent of these requirements to use standard commercial manuals modified to meet the minimum Specification set forth herein. The manuals shall provide instructions, illustrations, and other associated data for operations, preventive and corrective maintenance and repair, including a complete catalog of parts used in the assembly of the end item. The manuals provided shall contain complete instructions and information as set forth below for all Equipment components, assemblies, subassemblies, attachments, and accessories manufactured by the prime Supplier or those purchased by the prime Supplier from other sources and assembled in the finished end item.

GC-28.6.3

Contents of Operation and Maintenance Manuals: The contents of complete set of manuals shall include, at a minimum, the following:

(1) Table of Contents;
(2) Operating instructions;
(3) Preventive maintenance, service, and corrective maintenance or repair instructions;
(4) Parts list with recommended quantity; and
(5) Approved Shop Drawing(s).

GC-28.6.4

Binding and Delivery: The manual(s) shall be bound or otherwise securely enclosed in an oil and moisture resistant binder(s). Each binder cover shall indicate in bold type the manufacturer's name, contract number, model number, and serial number of the unit or equipment. Five (5) copies of the manual(s) shall be delivered with the Shop Drawings and must be approved with the Shop Drawings.

GC-29 CONTRACTOR'S TITLE TO MATERIALS

No Materials or supplies for the Work shall be purchased by Contractor or by any Subcontractor subject to any chattel mortgage, security agreement, or under a conditional sales contract or other agreement by which any security interest is retained

by the seller. Contractor warrants that he has good title to all Materials and supplies used by him in the Work, free from all liens, claims or encumbrances.

GC-30 INSPECTION AND TESTING OF MATERIALS

All Materials and Equipment used in the construction of the Project shall be subject to adequate inspection and testing in accordance with accepted standards and the requirements of the Agreement Documents. The laboratory and inspection agency shall be provided by Contractor and approved by the Commission for these tests; provided, however, that if the Commission has already secured the services of identified testing consultants/agencies, then Contractor shall engage the services of the testing consultant/agency designated by the Commission. Additional tests performed after rejection of Materials or Equipment shall be at Contractor's expense.

Materials of construction, particularly those upon which the strength and durability of the structure may depend, shall be subject to inspection and testing to establish conformance with Specifications and suitability for uses intended, but failure to inspect Materials will in no way waive the Commission's right to reject defective Materials or to condemn Work in which they are used. Contractor will provide for travel expenses, factory performed testing and set up costs for the factory inspection and testing of all major architectural elements, mechanical, electrical or process equipment. A factory visit for both designers' representative and a Commission representative may be required. No funds for stored materials or fabrication items will be released until the factory inspection is completed and a certified pay request is submitted.

All tests performed by Contractor shall be witnessed by the Commission unless the requirement therefor is waived in writing. Contractor shall give the Commission reasonable advance notice of all such tests. The Commission may perform additional tests on materials tested by Contractor, and Contractor shall furnish samples for this purpose as requested.

In the event that the Commission directs additional testing or inspection of the Work and the testing or inspection reveals that the Work is not in accordance with the Agreement Documents, Contractor shall pay for all costs of correction of the Work as well as for all costs of testing and inspection. In the event that any portion of Contractor's Work depends upon the Work of the Commission or any of its separate contractors, Contractor agrees that by beginning performance of the Work that is so dependent without written notice of any defect or deficiency that the Agreement or reasonably should have discovered, Contractor thereby agrees that the Commission's Work or that of its separate contractor is adequate and installed such that it is ready and sufficient in all respects to accept Contractor's Work.

GC-31 MATERIALS AND EQUIPMENT

Contractor shall furnish all Materials and Equipment to be incorporated into the Work. Only Materials and Equipment conforming to the requirements of the Drawings and Specifications shall be incorporated into the Work. Except as otherwise specified or approved in specific instances, all such Materials and Equipment shall be new and unused and of the highest quality available. Materials and Equipment for which no specific requirements are given in the Drawings or specifications shall be those best suited for the specified use, considering function, strength, durability and resistance to corrosion. Manufactured Materials and Equipment shall be obtained from sources which are currently manufacturing such Materials or Equipment, except as otherwise approved in writing.

If so ordered by the Engineer, sources of Materials shall be approved by him before delivery from those sources is commenced. Approval of a source of Materials may be withdrawn by the Engineer at any time that the Materials delivered from that source are found to be defective, and Contractor shall thereupon cease all deliveries from that source.

Manufacturer's warranties, certifications, guarantees, manuals, instruction sheets and parts lists provided with Materials and Equipment shall be furnished to the Engineer before final payment is made and receipt of same is a condition precedent to any obligation to make final payment.

GC-32 STORAGE OF MATERIALS AND EQUIPMENT

Materials and Equipment to be incorporated in the Work shall be stored in such a manner as to preserve their quality and fitness for incorporation in the final project. They shall be stored in a manner acceptable to the Designer and Owner and in an accessible facility that allows inspection. If at any time the Commission determines that any Materials or Equipment are not being properly stored, they may issue a directive to correct the storage or reject the Material for incorporation in the Project. No additional payment will be made for storage requirements. No payment will be made on Materials stored improperly or replaced due to improper storage.

No Equipment may be stored outside without the express written permission of the Commission on that specific piece of equipment stating that unit’s unique I.D. numbers.

For any Equipment or units that have rotating parts or bearing assemblies and must be stored for more than sixty (60) days, Contractor shall set up a schedule to manually rotate the units every fifteen (15) days and maintain a log certification to preserve the service life and warrantees.

GC-33 REPORTS, RECORDS, AND DATA

GC-33.1 General

Contractor shall submit to the Commission schedules of quantities and costs, progress schedules, reports, estimates, records, certificates, and other data as the Commission may request concerning Work performed or to be performed under this Agreement.

GC-33.2 Payroll Reports

Contractor shall be required to furnish weekly payroll reports to the Commission, certifying conformance with the wage rates listed in the Specifications. The requirement applies to Contractor, its Subcontractors, and any lower-tier Subcontractor providing labor at the site. These reports shall show completed payroll information, and such certificates and statements of compliance as required in the Federal Labor Standards and by the Commission relative to payrolls. The schedule of wage rates shall be posted on a bulletin board available to the workers.

GC-33.3 Contractor's Daily Reports

As soon as Contractor has started Work on the Project, he shall compile written daily reports of the Work performed the previous day by its employees, including the employees of Subcontractors.

The reports shall be prepared by Contractor's representative and shall bear his signature. Each report shall contain at least the following information:

(1) Description of Work items and references to payment items;
(2) Work forces and construction Equipment employed;
(3) Materials and Equipment installed;
(4) Work performed by Subcontractors; and
(5) Description of any accidents, interruptions, impacts, delays, problems, visitors, impediments, etc. encountered or continued.

Contractor shall require similar reports from Subcontractors for each day on Site and shall attach copies to Contractor’s Daily Report when submitted.

GC-34 CONTRACTOR'S SUPERVISION OF THE WORK

GC-34.1 General

Contractor shall provide competent, efficient supervision of the Work. All Work shall be performed in a skillful, workmanlike and orderly manner, and Contractor and his supervisory personnel shall enforce this requirement at all times.

GC-34.2 Contractor's Representative

Before beginning Work, Contractor shall notify the Commission in writing of one (1) person within his organization, satisfactory to the Commission, who shall have complete authority to supervise Work, to receive orders from the Commission, and to represent and act for Contractor in all matters arising under Agreement. Contractor shall not remove his representative without first designating, in writing, a new representative, who meets all of the foregoing requirements. Upon ten (10) days notice, the Commission or the Engineer may request replacement of Contractor's Representative if, in the Commission's opinion, it is necessary to ensure the timeliness or quality of the Work.

Contractor's representative shall normally be present at or about the Site of Work while the Work is in progress. Before leaving the Site of Work for any extended period, whether or not the Work is in progress, Contractor's representative shall notify the Commission, in writing, of the designation of an assistant, satisfactory to the Commission, with full authority to act for the representative in his absence, or shall make substitute arrangements satisfactory to the Commission. When neither Contractor, his representative, nor the representative's authorized assistant is present on a part of Work, the superintendent, foreman, or other employee or Contractor in charge of that part of the Work shall be an authorized representative of Contractor for the purposes set forth above.

GC-35 SUBCONTRACTORS AND SUPPLIERS

Contractor may utilize the services of specialty Subcontractors on those parts of Work that, under normal contracting practices, are performed by specialty Subcontractors, except as otherwise required by the Agreement Documents.

In addition to the designation of Subcontractors in the proposal documents, Contractor shall submit to the Commission a listing of the Subcontractor name, full address and telephone number, contact person, class or trade of work, list of similar past projects worked on, including reference names, telephone numbers, and other information as applicable to that contractor and the provisions of the Agreement Documents. Contractor shall make Subcontractor submittals sufficiently in advance of construction requirements to provide the Engineer and Commission with no less than sixty (60) days for review and appropriate action.

Contractor shall be as fully responsible to the Commission for the acts and omissions of all Subcontractors and Suppliers, and of persons either directly or indirectly employed by them, as he is for the acts and omissions of persons directly employed by him. Contractor shall cause appropriate provisions to be inserted in all subcontracts relative to Work to bind Subcontractors and Suppliers to Contractor by the terms of the General Conditions and other Agreement Documents, insofar as applicable to the work of Subcontractors and Suppliers, and to give Contractor the same power as regards terminating any subcontract that the Commission may exercise over Contractor under any provisions of the Agreement Documents.

Nothing contained in this Agreement shall create any contractual relation between any Subcontractor or Supplier and the Commission. The Contractor shall not award more than seventy-five percent (75%) of the Work to Subcontractors, provided that, to the extent that a more stringent standard is required in the Special Conditions, the more stringent standard shall control.

GC-36 INSPECTION OF WORK

GC-36.1 General

All of Work shall be subject to inspection by the Commission for conformity with the Drawings and Specifications, Working Drawings, Shop Drawings, data on Materials and Equipment, and material samples. Inspection of the balance of Work will be in accordance with this article, unless otherwise expressly indicated. Material tests and all other specified tests will be considered part of the inspection process and shall be subject to all of the provisions of this clause.

GC-36.2 Engineer's Access to Work

The Engineer shall have access to, and may inspect Work at all times and places. He shall have access to, and may inspect, Materials and Equipment to be incorporated in Work at all times at the place of production or manufacture and at the shipping point, as well as at Site of Work.

The Engineer will designate the Materials and Equipment to be inspected at the place of production or manufacture. Contractor shall give the Engineer fourteen (14) days advance written notice of the start of manufacture or production of Materials and Equipment so designated. The Engineer's failure to so designate Materials and Equipment shall in no way limit his right to inspect them at the place of production of manufacture.

Contractor's Materials and Equipment contacts shall include a notice to the Supplier or Subcontractor of the inspection requirements of this clause.

GC-36.3 Cooperation And Safety

The Engineer will perform inspections in such manner as not to delay Work unnecessarily, and Contractor shall perform the Work in such manner as not to delay inspection unnecessarily. Contractor shall give the Engineer reasonable advance notice of operations requiring special inspection of a portion of Work at any time by reasonable advance notice to the Engineer.

If requested by the Engineer, Contractor shall submit written certification, in a form approved by the Engineer, that he has inspected the Work prior to inspection by the Engineer, and that it complies with the Agreement Documents.

Contractor shall bear any additional inspection costs resulting from Contractor's failure to have a portion of Work ready for inspection at the time requested by Contractor for its inspection, or from reinspection of any previously rejected portion of Work where the defects requiring such rejection were due to Contractor's fault or negligence. Such costs may be deducted, in whole or in part, from any money due or that may become due Contractor under the Agreement.

Contractor shall furnish the Engineer all reasonable facilities for his safety and convenience in inspecting the Work, at all times and at all places where inspection may take place. If the Engineer finds that conditions are unsafe for inspection at a particular location, he may, upon notice to Contractor, refuse to inspect in that location until such conditions are corrected. Contractor shall bear any additional costs incurred to permit subsequent inspection of any portion of Work covered or completed at the location before correction of the conditions, whether or not such portion of Work is found to meet the requirements of the Agreement Documents.

GC-36.4 Inspection of Covered or Completed Portions of Work

If so ordered in writing by the Engineer, Contractor shall uncover, remove, tear out, or disassemble, in whole or in part, any covered or completed portion of Work to permit its inspection. If that portion of Work is found to be defective or unauthorized, Contractor shall bear all costs of uncovering, removal, tearing out, or disassembly. If such portion of the Work is found to conform with the Agreement Documents, including Agreement Drawings and Specifications, it shall be recovered, replaced, reassembled, or otherwise restored by Contractor to its original condition and, except as stated below, all Work required in connection with the inspection will be considered extra Work. If such portion of Work was covered or completed without the approval of the Engineer, where such approval was required by the Specifications or required in advance by the Engineer, Contractor shall bear all costs involved in the inspection, notwithstanding conformance of such portion of Work with the Agreement Documents including the Agreement Drawings and Specifications.

GC-36.5 Inspection Not a Waiver or Acceptance

Neither the inspection nor lack of inspection of any portion of the Work, nor the presence or absence of the Engineer during performance of any of the Work, nor acceptance of the whole or any part of the Work by the Engineer, nor any possession taken by the Commission or its employees shall operate as a waiver of any provision of this Agreement Documents or any power herein reserved to Commission or any rights to damages herein provided. Should an error in the estimate, or conclusive proofs of defective Work or materials used by or on the part of Contractor be discovered after the final payment has been made, the Commission reserves the right to claim and recover by process of law such sums as may be sufficient to correct the error or to make good the defects in the Work and Materials.

GC-36.6 Correction of Non-Compliant Work

If Contractor is found to have Work that fails to meet the intent of the Plans and Specifications or other Agreement Documents, or is in other aspects unsuitable he may be issued a notice of non-compliance on that portion of the Project Work. Contractor shall remedy the defective or incorrect Work within twenty-four (24) hours unless a different schedule is agreed to in writing. This non-compliance status may be issued on temporary installations that fail to protect the Work or site conditions.

GC-37 COMMISSION'S AUTHORITY

The Commission shall have authority to decide all questions as to interpretation and fulfillment of the requirements and obligations of the Agreement Documents, including, without limitation, all questions as to the prosecution, progress, quality, and acceptability of Work. The Commission may implement and enforce its decisions by orders, instructions, notices, and other appropriate means.

Any decision, order, instruction, or notice of the Commission will be confirmed in writing. Such confirmation shall state the specific subject of the decision, order, instruction, or notice and its date, time, place, author and recipient. All communications between Commission and Contractor or its representative will be through the Commission.

Inspectors may be appointed to inspect all Materials used and all Work done. Such inspection may extend to all or any part of the Work and to the preparation or manufacture of the Materials to be used. Inspectors will not be authorized to approve or accept any portion of the completed Work or to issue instructions contrary to the Plans and Specifications or other Agreement Documents. Inspector will have authority to reject defective Material and to suspend Work that is being improperly done, subject to the final decision of the Commission. Inspector shall, in no case, act as foreman or perform other duties for Contractor.

GC-38 PROGRESS PAYMENTS

GC-38.1 Progress Estimates

Within the time set forth in the Special Conditions or, if none, then prior to the submittal of the first Pay Application, Contractor shall submit to the Engineer for approval, in the form directed or acceptable to the Engineer, a complete schedule of values of the various portions of the Work, including quantities and unit prices, aggregating the Agreement Price (except in cases and to the extent that accepted unit prices form the basis of payment). The schedule shall subdivide the Work into component parts in sufficient detail to serve as the basis for progress payments during construction and to coordinate with the progress schedule required under the Special Conditions, and shall be supported by such data to substantiate its correctness as the Engineer may require. Each item in the schedule of values shall include its proper share of overhead and profit. An unbalanced breakdown providing for overpayment to Contractor on items of

Work which would be performed first will not be approved. The schedule of values, when approved by the Engineer, shall be used only as a basis for Contractor's monthly request for payment and shall not be used as the basis for computing additions to or deductions from the Agreement Price.

Subject to the provisions of this clause, Contractor shall prepare a written report for the Engineer's approval, on the form approved by the Commission, of the total amount of value of Work performed under the proposal items of Agreement to the time of such estimate and in accordance with the progress report based on the approved schedule.

No progress estimate or payment shall be considered an approval or acceptance of any Work performed, Material, or Equipment furnished. All estimates and payment will be subject to correction in subsequent estimates and the final estimate.

Progress payments will be made for all completed activities and for suitably stored Materials as herein provided.

GC-38.2 Progress Payments

Upon completion of each monthly estimate of Work performed and Materials furnished, the Engineer, subject to the provisions of the Agreement Documents, shall recommend payment to Contractor for the estimated value of such Work, Materials, and Equipment, less the amount of all prior payments and all liquidated damages and other amounts to be deducted or retained under the Agreement. Contractor will be paid one hundred (100%) percent, less retainage, of the cost of Materials received and properly stored but not incorporated into the Work. Payments for Materials or Equipment stored on the Site shall be conditioned upon submission by Contractor of bills of sale or such other procedures satisfactory to the Engineer to establish the Commission's title to such Materials or Equipment or otherwise protect the Commission's interest, including applicable insurance. No progress estimate or payment needs to be made when, in the Engineer's judgment, the increment in the estimated value of Work performed and Materials and Equipment furnished since the preceding estimate is less than Ten Thousand Dollars ($10,000.00). Contractor will be paid on or before the twenty-fifth day following receipt of the approved estimate from the Engineer.

GC-38.3 Retention from Progress Payments

The amounts retained by the Commission from each progress payment shall be as follows:

(1) Except as noted below, withholding ten percent (10%) of the estimated value of the Work performed until 50 percent of the Contract value, including change orders and other additions to the Contract value provided for by the Contract Documents, is due and the manner of completion of the Contract Work and its progress are reasonably satisfactory to the Commission.

(2) At the discretion of the Commission and with the approval of Contractor, the retainage of each Subcontractor may be released separately as the subcontractor completes his or her work.

(3) Upon receipt of written request from Contractor, the Commission may, in its unilateral discretion, reduce retainage to Contractor for payment of retainage to Subcontractors who have completed their Work. If such retainage is released, Contractor shall furnish the Commission with an affidavit certifying that all monies due the Subcontractor have been paid. If the Commission determines that the released retainage has not been paid to the Subcontractor, the amount released shall be reinstated.

(4) The Commission may, in its unilateral discretion, elect to reduce Contractor's retainage and that of Subcontractors who have not completed all their work if the Commission believes it to be in its interest to do so.

(5) If reduced, the Commission may reinstate ten percent (10%) withholding if it believes it necessary or desirable to do so, and Contractor agrees that the Commission is free to do so.

(6) If, after discontinuing the retention, the Commission determines that the Work is unsatisfactory or has fallen behind schedule, retention may be resumed at the previous level. If retention is resumed, Contractor and Subcontractors shall be entitled to resume withholding retainage accordingly.

GC-38.4 Additional Payment Conditions

GC-38.4.1

The submission and approval of the CPM Schedule and periodic updates thereof, as required by the Schedule requirements of the Special Conditions, shall be an integral part and basic element of the application upon which Progress Payments shall be made. Contractor shall be entitled to Progress Payments only as determined from the currently approved and updated CPM Schedule.

GC-38.4.2

Contractor shall promptly pay each Subcontractor upon receipt of payment from the Commission, out of the amount paid to Contractor on account of such Subcontractor's Work, the amount to which said Subcontractor is entitled, reflecting the percentage actually retained, if any, from payments to Contractor on account of such Subcontractor's Work. Contractor shall, by an appropriate

agreement with each Subcontractor, require each Subcontractor to make payments to their Subcontractors in similar manner.

GC-38.4.3

The Commission may, on request and at its discretion, furnish to any Subcontractor, if practicable, information regarding the percentages of completion or the amounts applied for by Contractor and the action taken thereon by the Commission on account of Work done by such Subcontractor.

GC-38.4.4

Neither the Commission nor the Engineer shall have any obligation to pay or to see to the payment of any Subcontractor or Supplier, but may at its sole option, withhold payment from Contractor on account of claims of nonpayment by Subcontractors and Suppliers in accordance with GC-38.5.1.

GC-38.4.5

No certification of Progress Payment (any progress payment), or any partial or entire use or occupancy of the Project by the Commission, shall constitute an acceptance or approval of any Work not fully in accordance with the Agreement Documents.

GC-38.4.6

Any and all funds paid to Contractor pursuant to the Commission-Contractor Agreement are hereby declared to constitute trust funds in the hands of Contractor, to be applied first to the payment of claims of Subcontractors, laborers, and Suppliers arising out of the Work, to claims for utilities furnished and taxes imposed, and to the payment of premiums on surety and other bonds and on insurance, before application to any other purpose. Whenever required by the Engineer, it shall be the duty of Contractor to file with the Engineer a verified statement, in form satisfactory to the Engineer, certifying the amounts then due and owing from Contractor for labor and materials, setting forth therein the names of the person whose charges or claims for labor or materials are unpaid, and the undisputed amount due to each respectively. The Commission, at its option, may also require the Contractor to furnish evidence of payment of Subcontractors and Suppliers in any form satisfactory to the Commission in addition to the requirements of GC-38.6.

GC-38.4.7

No payments made hereunder by Commission to Contractor prior to Final Payment shall be deemed conclusive as to the actual value of the Work performed by Contractor or of Contractor's performance of the Agreement.

GC-38.4.8

Commission reserves the right to issue any Progress Payment and Final Payment by check jointly to Contractor and any Subcontractor or Supplier at Commission's option.

GC-38.4.9

Should the Commission fail to issue any Progress Payment within sixty (60) days of approval of an acceptable monthly estimate of Work performed and Materials furnished, annual interest on the payment amount may accrue at the Prime Rate, plus one percent. The Prime Rate shall be based on that published in the *Wall Street Journal* on the first business day of January or June, whichever has most recently passed, of the current year. Nothing stated herein shall invalidate any other conditions of Progress Payment approval.

GC-38.4.10

Contractor agrees to execute such pay application forms and release of claim forms as the Commission may require as a condition precedent to the Commission's obligation to make payment.

GC-38.4.11

This Article 38 shall completely supersede the Georgia Prompt Payment Act as it relates to Owner payments and any modifications or successors to it to the full extent allowed by law.

GC-38.5 Payments Withheld

GC-38.5.1

The Commission may decline to approve payment and may withhold any payment, in whole or in part, to the extent necessary to reasonably protect the Commission from loss because of:

(1) Defective Work not remedied;
(2) Third party claims filed or reasonable evidence indicating probable filing of such claims;
(3) Failure of Contractor to make payments properly to Subcontractors, or for labor, Materials or Equipment;
(4) Reasonable evidence that the Work cannot be completed for the unpaid balance of the Agreement Price;
(5) Damage or the reasonable expectation of damage to the Commission or another contractor;

(6) Reasonable evidence that the Work will not be completed within the Agreement Time;
(7) Failure to carry out the Work in accordance with the Agreement Documents;
(8) Failure of Contractor to fully comply with the Schedule requirements of the Special Conditions;
(9) Failure to comply with insurance and safety requirements;
(10) Failure to keep current "As-Built" Records; or
(11) Failure of Contractor to comply with the requirements of the Agreement Documents in connection with the pay application process.

GC-38.5.2

When the grounds in Article GC-38.5.1., above are removed, payment shall be made for amounts withheld because of them.

GC-38.6 Waiver and Preservation of Claims In Periodic Application of Payments

Contractor has been employed by the Commission to furnish labor, material, services, and other improvements. Upon receipt of the amounts requested in any monthly application for payment, Contractor waives and releases any and all claims it may have against the Commission or the Engineer through the date of that payment application, excepting those rights that Contractor may have in any retained amounts on account of labor or materials, or both, furnished by Contractor and the unresolved claims, if any, enumerated in the Application for Payment. Contractor expressly warrants by submission of its periodic Application for Payment that all due and payable bills with respect to the Work have been paid to date or shall be paid from the proceeds of the Application for Payment, and waivers and releases from all subcontractors and materialmen have been or will be obtained and delivered to the Commission in such form as to constitute effective waivers and releases of claims under all applicable laws. Upon receipt of payment of the amounts certified in the Application for Payment, Contractor does thereby waive, release, and relinquish any claims for additional compensation or an extension of time which Contractor has then or may have had arising out of the performance of the work or the furnishing of the labor or materials by Contractor through the date of the Application for Payment. This waiver and release applies to all facts, events, circumstances, changes, constructive or actual delays, acceleration, extra work, disruption, interferences, impacts and the like, which have occurred or may be claimed to have occurred prior to the date of the Application for Payment, excepting only claims which are then currently unresolved for which written notice has previously been provided to the Commission **and** which Contractor specifically enumerates in its Application for Payment. Failure to so enumerate claims shall be a final waiver and relinquishment of claim, whether or not such claims were previously submitted in accordance with GC-41.

GC-39 SUBSTANTIAL COMPLETION ("Substantial Completion")

GC-39.1 Certificate of Substantial Completion

When Contractor considers that the Work, or a designated portion thereof which is acceptable to the Commission, is Substantially Complete, Contractor shall prepare for the Engineer a list of items to be completed or corrected. The failure to include any items on such list does not alter the responsibility of Contractor to complete all Work in accordance with the Agreement Documents. When the Engineer, on the basis of an inspection, determines that the Work or designated portion thereof is Substantially Complete, they will then prepare a Certificate of Substantial Completion of the Work which shall establish the Date of Substantial Completion of the Work, shall state the responsibilities of the Commission and Contractor for security, maintenance, heat, utilities, damage to the Work and insurance and shall fix the time within which Contractor shall complete the items listed therein. The Certificate of Substantial Completion of the Work shall be submitted to the Commission and Contractor for their written acceptance of the responsibilities assigned to them in such Certificate.

GC-39.2 Warranty Commencement

Warranties required by the Agreement Documents shall commence on the Date of Final Completion of the Project or designated portion thereof unless otherwise provided in the certificate of Substantial Completion of the Work or designated portion thereof.

GC-39.3 Intentionally Omitted

GC-40 FINAL PAYMENT ("Final Payment")

GC-40.1 Certificate for Final Payment

Following the Engineer's issuance of the certificate of Substantial Completion of the Work or designated portion thereof, and Contractor's Completion of the Work, Contractor shall forward to the Engineer a Written Notice that the Work is ready for final inspection and acceptance, and shall also forward to the Engineer a final Application for Payment. Upon receipt, the Engineer will make the necessary evaluations. When the Engineer finds the Work acceptable under the Agreement Documents and the Agreement fully performed, the Engineer will issue a certificate for Payment that will approve the Final Payment due Contractor.

GC-40.2 Final Payment Conditions

Neither the Final Payment nor the retainage shall become due until Contractor submits to the Engineer:

(1) An affidavit that all payrolls, bills for Materials and Equipment, and other indebtedness connected with the Work have been paid or otherwise satisfied;

(2) Consent of surety, if any, to Final Payment;

(3) Clear title for all vehicles and/or trailers, if any, to remain as Commission property;

(4) Complete set of as-built record Drawings;

(5) Documentation for all state sales taxes paid by Contractor including completed State Department of Revenue Refund forms and all necessary back up documentation required by the Department of Revenue;

(6) If required by the Engineer or Commission, other data establishing payment or satisfaction of all such obligations, such as receipts, releases, and waivers of liens arising out of the Agreement, to the extent and in such form as may be designated by the Engineer or Commission. If any Subcontractor refuses to furnish a release or waiver required by the Engineer or Commission, Contractor may furnish a bond satisfactory to the Commission to indemnify the Commission against any such loss. If any lien or indebtedness remains unsatisfied after all payments are made, Contractor shall refund to the Commission all monies that the latter may be compelled to pay in discharging such lien or other indebtedness, including, without limitation, all costs, expenses, arbitration fees, reasonable attorneys' fees, expert fees, or consultant fees incurred in connection with same; and

(7) As a condition of Final Payment on the Project, Contractor shall, prior to final payment, complete and submit to the Commission, all of the invoice documentation and the State of Georgia Revenue Department forms required to obtain the sales tax refund on all applicable equipment expenditures. This submittal shall include the certified forms and auditable back-up necessary to substantiate the expenditures for State refund.

GC-40.3 Intentionally Omitted

GC-40.4 Waiver of Claims by Contractor Upon Final Payment

The acceptance of Final Payment shall constitute a waiver of all claims by Contractor except those previously made in writing and identified **and** enumerated by Contractor as unsettled at the time of the application for Final Payment. Failure to so enumerate unsettled claims shall be a final waiver and relinquishment of claim, whether or not such claims were previously submitted in accordance with GC-41.

GC-41 CLAIMS, CHANGES, AND EXTRA WORK

Contractor acknowledges the extreme importance to Owner of identifying and resolving Claims on an "as-you-go" basis in order for Owner to maintain its relationship with all available funding sources, including local taxpayers as well as the state and federal governments. Contractor further acknowledges the extreme prejudice suffered by Owner as a result of any attempted assertion by Contractor of Claims except as specifically permitted herein in the precise manner and within the time limits established herein, which prejudice includes, but is not limited to that resulting from the trouble and expense of having to deal with disputes over claims, if any, that were not made in accordance with the precise manner and within the time established herein.

GC-41.1 Claims and Contractor's Obligation to Proceed in the Face of Disputes

GC-41.1.1

A claim is any demand, contention, or assertion by Contractor seeking additional time or money or under the Agreement Documents. Claims by Contractor must be made in writing as specified herein. Claims from Contractor must contain all of the following:

(1) a narrative statement referencing and attaching the supporting documentation and specifically describing the legal, factual, and contractual basis of the claim;

(2) if the claim alleges delay to the work or requests an extension time for excusable delay, the claim must include the precise number of days claimed, all alleged impacts on the work, as well as a detailed critical path as-built schedule analysis illustrating that the delays claimed were on the critical path of the Project, and that no concurrent delays were experienced during the critical path delay.

(3) if the claim alleges improper acceleration of the work pursuant to GC-27.2, the claim must include the precise number of days' time extension Contractor contends he would have been entitled to receive, but for the acceleration, and the precise number of days by which the work has been accelerated. No claims for acceleration for work that is not on the critical path shall be permitted. Claims for acceleration must be accompanied by a detailed CPM analysis. Claims for acceleration shall be limited to the recoverable acceleration expenses referenced in Article GC-27 of this Agreement.

(4) if the claim is for additional compensation, the claim must include a detailed calculation of the precise amount claimed with all supporting documentation and shall also comply with Atlanta Procurement Code §2-1201 for claims expected to exceed $20,000.00. All claims must reference the specific contract provisions relied upon to support the claim. Claims that are not based upon a contractual provision or remedy shall be void as Contractor agrees that its entitlement is limited to the remedies offered by the terms of this Agreement. All claims must specifically reference, by name, this Article, and the fact that the claim is being submitted under this Article. Any writing or other form of notice, however designated, which fails to specifically reference this Article, by name, shall not be deemed to constitute a valid claim hereunder.

Items (1), (2), (3) and (4) above shall hereinafter be referred to as the "Final Accounting."

Initial written notice of Contractor's intent to assert a claim (the "Initial Notice") must be made in writing within seven (7) days after the occurrence of the event giving rise to the claim or the right to submit a claim is waived. Contractor shall submit all information reasonably available to him that is otherwise required in the Final Accounting at the time of the Initial Notice.

Except for Claim events that continue more than thirty (30) days, within thirty (30) days after the conclusion of the event giving rise to the Claim, Contractor shall provide the Final Accounting. Failure to timely provide the Final Accounting shall constitute a waiver of the Claim even if timely Initial Notice is provided. Any waiver by the Commission of the notice requirements for the Initial Notice or the Final Accounting for a single claim, event, or occurrence shall not constitute a waiver of these notice requirements for any other claim, event, or occurrence. Each request for time or money by Contractor shall be considered a separate claim. All information required in the Final Accounting must be submitted within the time limits established herein, and no supplementation of the information or claims shall be permitted. Any attempted reservation of the right to submit or supplement an earlier made claim shall be void.

For events giving rise to a claim that Contractor contends continues for more than thirty (30) days, including any alleged continuing claims or continuing impacts that Contractor contends continue to accrue beyond thirty (30) days, then Contractor shall give the Initial Notice as required herein, stating therein that the event or impact is continuing. Within thirty (30) days of the start of the event (as documented by the Initial Notice), Contractor shall provide all information available to him that is required in

the Final Accounting, including without limitation a quantification of any costs incurred to date. Contractor shall supplement the required information, including without limitation any additional damages accrued during the period and any scheduling information required, every thirty (30) days thereafter until the event or impact ceases, culminating in the Final Accounting within thirty (30) days thereafter. Failure to timely provide: (a) the Initial Notice; (b) the information due within thirty (30) days thereafter; (c) timely and complete supplements; or (d) the timely Final Accounting shall be deemed a waiver of any claim for time or money for events occurring after the date Contractor last timely and completely complied with the requirements hereof. Any attempt to reserve the right to supplement at a different time or to accrue costs or impacts beyond thirty (30) days shall be void and shall be deemed a waiver of any further claim relating thereto.

The Final Accounting shall be accompanied by a sworn statement from a representative of Contractor who is the person most knowledgeable of the facts and circumstances surrounding the Claim and personally familiar with such facts and circumstances certifying that (a) the claim is submitted in good faith, (b) the cost data and all backup information submitted are true, accurate, and complete, and (c) that the amount requested accurately reflects the amount for which Contractor and the Affiant believe the Commission is liable.

GC-41.1.2 Claim Review

Upon receiving a statement of claim, and with the advice and assistance of the Engineer as appropriate, the Commission may review the statement of claim submitted by Contractor. In conducting this review, the Engineer or other person designated by the Commission shall have the right to require Contractor to submit such additional or supporting documents, data and other information as the Commission and/or the Engineer may require, and the failure to submit such additional documents, data or other information within thirty (30) days following written request shall be deemed a waiver of the claim. Contractor agrees that it will produce any documents requested that would otherwise be produceable in a civil action under O.C.G.A. § 9-11-34. Upon completion of such review, to take place within such time as the Commission may designate following receipt of the additional documents, data or other information as may have been required by the Commission and/or the Engineer, the Commission in consultation with the Engineer may issue a written determination, and if it deems appropriate accept such parts of the claim as are found in good faith to be proper. If Contractor agrees, a Change Order shall be issued to amend the Agreement Price, the time for completion or either of them as may be found proper. If Contractor disputes the determination made by the Commission, Contractor as a condition precedent to any further action to resolve such dispute must notify the Commission and the Engineer in writing within ten (10) days following receipt of the decision of the

factual basis of such dispute and permit the Commission fifteen (15) additional days to reconsider and, if it deems it appropriate, issue a modified decision.

GC-41.1.3 No Waiver

Nothing contained in this section shall operate to limit or extinguish any right or defense of the Commission contained elsewhere in the Agreement Documents or available at law or in equity or constitute a waiver by the Commission of any right or defense otherwise available. Nothing in this Article GC-41 shall alter Article GC-24 or GC-26 or give Contractor the right to recover additional compensation not authorized by other items of the Contract Documents or precluded thereby.

GC-41.1.4 Absolute Conditions Precedent

The failure of Contractor to file any claim within the time limits prescribed herein or in the form or manner precisely as required hereby shall be deemed a material prejudice to the interests of the Commission and shall constitute an absolute waiver of the claim and the right to file or thereafter prosecute the same.

GC-41.1.5

Claims by the Owner shall not be subject to the requirements of Section 41.1, Claims by the Owner shall be asserted within a reasonable time of discovery of the claim and shall include information necessary for Contractor to reasonably evaluate the claim. The Owner agrees to notify Contractor in writing of its claims within a reasonable time but not later than the close of discovery in any arbitration or litigation conducted hereunder.

GC-41.1.6

Pending final resolution of a Claim, except as otherwise agreed in writing, Contractor shall proceed diligently with performance of the Work and the Owner shall continue to make undisputed payments in accordance with the Agreement Documents. The making of any payment by Owner shall not constitute a waiver of any Claims by the Owner or an acknowledgement by Owner that Contractor is entitled to additional time or money.

GC-41.1.7

Contractor acknowledges the extreme importance to the Commission of completing the Work as expeditiously as possible and the prejudice the Commission may suffer if the Work is not completed as scheduled. Contractor further acknowledges the strong likelihood that disputes between the parties will arise and that Contractor will likely be required to perform disputed work which the Commission contends to be included within Contractor's scope of work, or that if acknowledged as changed or extra work, the likelihood that the

Commission may dispute the amount of Contractor's alleged entitlement. Irrespective of whether it is within the general scope of the Work, Contractor agrees to perform all work, whether disputed or undisputed, that the Commission directs. No dispute or controversy shall interfere with the progress of construction, and Contractor shall proceed with the work without interruption, deficiency, or delay. Contractor warrants and represents that Contractor and its Surety have sufficient capitalization and resources to complete the Work, including all disputed work whether or not it is within the general scope of the work, and resolve disputes in accordance with the terms of this Agreement. Contractor therefore agrees that any failure or refusal by Contractor to perform disputed work which the Commission directs Contractor to perform shall be a material and substantial breach of the Agreement for which Contractor and its surety are jointly and severally liable. Contractor acknowledges and agrees that its failure or refusal to perform disputed work will cause the Commission significant damage and that such damages may include increased costs to have another contractor complete the work at a premium over the costs Contractor would have incurred to perform the disputed work. Contractor acknowledges and agrees that should it refuse to proceed in the face of disputes, it is liable for all additional costs incurred in completing both Contractor's base Agreement scope of work and any changed, extra, or additional work.

GC-41.2 Changes in the Work

GC-41.2.1 General

GC-41.2.1.1

Changes in the Work may be accomplished after execution of the Contract, and without invalidating the Agreement, by Change Order or Change Directive. For purposes of this Agreement, the terms "extra work" or "additional work" shall have the same meaning as "changed work" and be governed by the same Agreement provisions governing changes.

GC-41.2.1.2

Changes in the Work shall be performed under applicable provisions of the Agreement Documents, and Contractor shall proceed promptly, unless otherwise provided in the Change Order or Change Directive. A change in the Agreement Price or the Agreement Time shall be accomplished only by Change Order or Change Directive, and no other compensation shall be due to Contractor other than that permitted pursuant to a Change Order or a Change Directive. Accordingly, no course of conduct or dealings between the parties, nor express or implied acceptance of alterations or additions to the Work, and no claim that Owner has been unjustly enriched by any alteration of or addition to the Work, whether or not there is, in fact, any unjust enrichment, shall be the basis of any claim

for an increase in any amounts due under the Agreement Documents or a change in any time period provided for the Agreement Documents. Any failure to comply with the notice and other claim procedure requirements included herein or any other Agreement requirements shall be a waiver of the right to additional time or money.

GC-41.2.1.3

Any written directive which Contractor believes to constitute a change hereunder must be accompanied by the notice required under Article GC-41 governing claims. ALL CONTRACTOR CLAIMS FOR CHANGES MUST BE ASSERTED IN ACCORDANCE WITH ARTICLE GC-41 OR THEY ARE WAIVED AND RELEASED.

GC-41.2.2 Change Orders

GC-41.2.2.1

A Change Order is a written agreement signed by the Owner and Contractor, stating their agreement upon all of the following:

(1) Change in the Work

(2) The amount of the adjustment, if any, in the Agreement Price; and

(3) The extent of the adjustment, if any, in the Agreement Time.

GC-41.2.2.2

Methods used in determining adjustments to the Agreement Price for Change Orders shall be limited to those listed in Article 41.2.3.3.

GC-41.2.2.3

Any Change Order accepted by Owner and Contractor constitutes a full and final settlement and accord and satisfaction of all effects of the change, including but not limited to any and all impact, delay and/or disruption relating thereto upon any and all aspects of the Work or the Agreement Documents, and will compensate Contractor fully. In such case, Contractor expressly waives any and all right to make a Claim or to take any action or proceeding for any other consequences of any Change Order, whether the consequences result directly or indirectly from the Change Order. In addition, Contractor expressly waives and releases any Claim it may have against the Owner for any adjustment in the Substantial Completion Date or Final Completion Date resulting from, arising out of, or

related to the change reflected in any such Change Order, including, but not limited to, any impact that such change may have on the unchanged portion of the Work or the Substantial or Final Completion Date. In addition, Contractor expressly waives and releases any Claim it may have against the Owner for any additional compensation or damages resulting from, arising out of, or related to, the change reflected in any such Change Order, including, but not limited to any Claim for damages due to delay, disruption, hindrance, impact, ripple effect, cumulative impact, interference, cardinal change, abandonment, inefficiencies or extra work arising out of, resulting from, or related to the change reflected in any such Change Order, including, but not limited to, any impact that such change may have on the unchanged portion of the Work or the Substantial or Final Completion Date.

GC-41.2.3 Change Directives

GC-41.2.3.1

A Change Directive is a written order prepared by the Owner and signed by the Owner directing a Change in the Work prior to agreement or adjustment, if any, in the Agreement Price or Agreement Time, or both. The Owner may, by Change Directive, without invalidating the Contract, order changes in the Work consisting of additions, deletions or other revisions, the Agreement Price and Agreement Time being adjusted accordingly to the extent necessary. Any Claim arising from a Change Directive must be made in accordance with the terms of this Contract.

GC-41.2.3.2

A Change Directive shall be used in the absence of total agreement on the terms of a Change Order.

GC-41.2.3.3

If the Change Directive warrants an adjustment to the Agreement Price, the adjustment shall be based on one of the following methods:

(1) mutual acceptance of a lump sum properly itemized and supported by sufficient substantiating data to permit evaluation;

(2) unit prices stated in the Agreement Documents or subsequently agreed upon;

(3) cost to be determined in a manner agreed upon by the parties and a mutually acceptable fixed or percentage fee; or

(4) by Force Account as provided hereafter.

GC-41.2.4 Force Account

When no agreement is reached for Changed Work to be done at Lump Sum or Unit Prices or another mutually agreed manner, such work may be authorized by the Commission to be done on a Force Account basis. A Force Account estimate that identifies all anticipated costs shall be prepared by Contractor. Work shall not begin until the Force Account is approved. Payment for Force Account work will be in accordance with the following:

GC-41.2.4.1 Labor

For all labor, equipment operators, and supervisors, excluding superintendents, in direct charge of the specific operations, Contractor shall receive the rate of wage agreed upon in writing before beginning work for each and every hour that said labor, equipment operators, and supervisors are actually engaged in such work.

Contractor shall receive the actual costs paid to, or in behalf of, workers by reason of subsistence and travel allowances, health and welfare benefits, pension fund benefits, or other benefits, when such amounts are required by collective bargaining agreement or other employment contract generally applicable to the classes of labor employed on The Work.

An amount equal to 10% of the sum of the above items will also be paid Contractor. Said 10% shall be deemed to include 3% for Contractor's fee and 7% for Contractor's overhead.

GC-41.2.4.2 Bond, Insurance, and Tax

For bond premiums, property damage, liability, and worker's compensation insurance premiums, unemployment insurance contributions, and Social Security taxes on the Force Account work, Contractor shall receive the actual cost, to which cost no percentage will be added. Contractor shall furnish satisfactory evidence of the rate or rates paid for such bond, insurance, and tax.

GC-41.2.4.3 Materials

For materials accepted by the Engineer and used, Contractor shall receive the actual cost of such material incorporated into The Work, including Contractor paid transportation charges (exclusive of machinery rentals as hereinafter set forth), to which cost 10% will be

added. Said 10% shall be deemed to include 3% for Contractor's fee and 7% for Contractor's overhead.

GC-41.2.4.4 Equipment

For any machinery or special equipment (other than small tools) including fuel and lubricant, plus transportation costs, the use of which has been authorized by the Engineer, Contractor shall receive the rental rates indicated below for the actual time that such equipment is in operation on the Work or the time, as indicated below, the equipment is directed to stand by.

Equipment rates shall be based on the edition in effect at the time of Contractor's original bid of the *Rental Rate Blue Book for Construction Equipment* or *Rental Rate Blue Book for Older Construction Equipment*, whichever applies, as published by EquipmentWatch using all instructions and adjustments contained therein and as modified below.

Allowable Equipment Rates shall be established as defined below:

- Allowable Hourly Equipment Rate = Monthly Rate/176 x Adjustment factors x 70%.
- Allowable Hourly Operating Cost = Hourly Operating Cost x 70%.
- Allowable Rate Per Hour = Allowable Hourly Equipment Rate + allowable Hourly Operating Cost.
- Standby Rate = Allowable Hourly Equipment Rate x 35%

NOTE: The monthly rate is the basic machine plus any attachments.

Standby rates shall apply when equipment is not in operation and is directed by the Engineer to standby for later use. In general, Standby rates shall apply when equipment is not in use, but will be needed again to complete The Work and the cost of moving the equipment will exceed the accumulated standby cost. Payment for standby time will not be made on any day the equipment operates for 8 or more hours. For equipment accumulating less than 8 hours operating time on any normal workday, standby payment will be limited to only that number of hours which, when added to the operating time for that day equals 8 hours. Standby payment will not be made on days that are not normally considered workdays.

The Commission will not approve any rates in excess of the rates as outlined above.

Payable time periods will not include:

- Time elapsed while equipment is broken down
- Time spent in repairing equipment, or
- Time elapsed after the Engineer has advised Contractor the equipment is no longer needed.

If a piece of equipment is needed which is not included in the above *Blue Book* rental rates, reasonable rates shall be agreed upon in writing before the equipment is used. All equipment charges by persons or firms other than Contractor shall be supported by invoices.

Transportation charges for each piece of equipment to and from the site of the Work will be paid provided:

- The equipment is obtained from the nearest approved source
- The return charges do not exceed the delivery charges
- Haul rates do not exceed the established rates of licensed haulers, and
- Such charges are restricted to those units of equipment not already available and not on or near the Project

No additional compensation will be made for equipment repair.

GC-41.2.4.5 Miscellaneous

No additional allowance will be made for general superintendence, the use of small tools, or other costs for which no specific allowance is herein provided.

GC-41.2.4.6 Compensation

Contractor's representative and the Engineer shall compare records and agree on the cost of work done as ordered on a Force Account basis at the end of each day. Should Contractor fail or refuse to fulfill this daily record keeping function by meeting with the Engineer and agreeing upon the cost of Force Account Work, Contractor agrees that it forfeits and releases any right to payment or right to claim for the Force Account Work for that day.

GC-41.2.4.7 Subcontract Force Account Work

For work performed by an approved Subcontractor or lower-tier Subcontractor, all provisions of this Section that apply to Contractor in respect to labor, materials and equipment shall govern. Contractor shall coordinate the work of his Subcontractor. The prime Contractor

will be allowed an amount to cover administrative cost equal to 5% of the Subcontractor's amount earned but not to exceed $5,000.00 per Subcontractor for each Change Order or Change Directive done by Force Account. Markup for lower-tier Subcontract work will not be allowed. The 5% shall be for Contractor's overhead in administering the change.

Should it become necessary for Contractor or Subcontractor to hire a firm to perform a specialized type of work or service which Contractor or Subcontractor is not qualified to perform, payment will be made at reasonable invoice cost. To each invoice cost a markup to cover administrative cost equal to 5% of the total invoice but not to exceed $5,000.00 will be allowed Contractor or Subcontractor but not both. If paid to Contractor, the 5% shall be for Contractor's overhead in administering the change.

GC-41.2.4.8 Statements

No payment will be made for work performed on a Force Account basis until Contractor has furnished the Engineer with duplicate itemized statements of the cost of such Force Account work detailed as follows:

(1) Name, classification, date, daily hours, total hours, rate, and extension for each laborer, equipment operator, and supervisor, excluding superintendents.

(2) Designation, dates, daily hours, total hours, rental rate, and extension for each unit of machinery and equipment.

(3) Quantities of materials, prices, and extensions.

(4) Transportation of materials.

(5) Cost of property damage, liability, and worker's compensation insurance premiums, unemployment insurance contributions, and Social Security tax.

Statements shall be accompanied and supported by invoices for all materials used and transportation charges. However, if materials used on the Force Account work are not purchased specifically for such work but are taken from Contractor's stock, then, in lieu of the invoices, Contractor shall furnish an affidavit certifying that such materials were taken from his stock, that the quantity claimed was actually used, and that the price and transportation claimed represent the actual cost to Contractor.

Payment based on Force Account records shall constitute full payment and settlement of all additional costs and expenses caused by, arising from, or associated with the Work performed, including any time related or impact costs in connection with the Force Account work or any unchanged work impacted thereby.

GC-41.2.5

If any change or Change Directive meets the requirements for excusable delay and a change in the Agreement Time is warranted as a direct result of the change or Change Directive, then the three items of delay damage compensation identified in Article GC-26.2.1 for the unenforceability exception to the recoverability of delay damages under the Agreement may be included as a part of the adjustment in the Agreement Price for the change or change directive if Contractor has met all other requirements of the Agreement, including the notice and claim procedure requirements. Provided, however, Contractor shall, under no circumstances, be allowed to duplicate any costs included under this Article so as to receive a double recovery. In the event that Contractor is entitled to the three items of delay damage compensation referenced above, there shall be deducted from said entitlement all amounts paid or allowed Contractor for overhead pursuant to the percentage markups included herein.

GC-41.2.6

Upon receipt of a Change Directive, Contractor shall promptly proceed with the change in the Work involved and advise the Owner of Contractor's agreement or disagreement with the method, if any, provided in the Change Directive for determining the proposed adjustment in the Agreement Price or Agreement Time utilizing the notice and claim procedures set forth herein.

GC-41.2.7

A Change Directive signed by Contractor indicates the agreement of Contractor therewith, including adjustment in Agreement Price and Agreement Time or the method for determining them. Such agreement shall be effective immediately and shall be recorded as a Change Order.

GC-41.2.8

If Contractor does not respond promptly or disagrees with the method for adjustment in the Agreement Price, the method and the adjustment shall be based upon the actual expenditures and savings attributable to the change, as determined in accordance with Article 41.2.8.4.

GC-41.2.9

The amount of credit to be allowed by Contractor to the Owner for a deletion or change which results in a net decrease in the Agreement Price shall be the actual cost, and that proportion of Contractor's Fee (including both profit and overhead) allocable to such actual cost.

GC-41.2.10

Pending final determination of the total cost of a Change Directive to the Owner, amounts not in dispute for such changes in the Work may be included in Applications for Payment accompanied by a Change Order indicating the parties' agreement with part or all of such costs. For any portion of such cost that remains in dispute, the Owner may make an interim determination for purposes of monthly certification for payment for those costs. That interim determination of cost, if made, shall be subject to the right of the Owner to change or withdraw the same unless and until finalized by Change Order.

GC-41.2.11

When Contractor agrees with the determination made by the Owner concerning the adjustments in the Agreement Price and Agreement Time, or Owner and Contractor otherwise reach agreement upon the adjustments, such agreement shall be effective immediately and shall be recorded by preparation and execution of an appropriate Change Order.

GC-41.3 No Oral Changes.

It is expressly agreed that, except in an emergency endangering life or property, no modifications, additions or changes to the Work shall be made except upon written order of Contractor, and Contractor shall not be liable to Subcontractor for any extra labor, materials or equipment furnished without such written order. No officer, employee or agent of Contractor is authorized to direct any extra or changed work by verbal order nor is Subcontractor authorized to proceed with any work upon verbal order.

No eliminations, additions, or alterations shall be made in the Work except upon written order of The Commission. No course of conduct or dealings between the parties, nor express or implied acceptance of alterations or additions to the Work, and no claim that the Commission has been unjustly enriched by any alteration or addition to the Work, whether or not there is, in fact, any unjust enrichment to the Work, shall be the basis of any claim for an increase in any amounts due under the Agreement Documents or an increase in any time period provided for in the Agreement Documents. No action, conduct, omission, prior failure, or course of dealing by the Commission shall waive, modify, change, or alter the requirement that Change Orders and Change Directives must be in writing signed by the Commission and/or Contractor, and that such written Change Orders or Change Directives are the exclusive methods for effecting any change to the Agreement Price or Agreement Time. Contractor understands and agrees that the

Agreement Price and Agreement Time cannot be changed by implication, oral contracts, verbal directives, actions, inactions, course of conduct, or constructive change order. Contractor shall be under no obligation to perform pursuant to an oral directive to perform work in addition to the Project scope excepting the case of an emergency threatening personal injury or property damage. Contractor acknowledges and agrees that no one in the Commission's organization has the authority to order changes without a signed writing.

GC-42 MISCELLANEOUS MODIFICATIONS AND ALLOWANCE ITEMS

When directed by the Commission's Representative, the Contractor will perform Miscellaneous Modifications and Allowance Items of Work. Miscellaneous Modifications and Allowance Items of Work are not necessarily shown in the Contract Documents, but may be necessary for the successful completion of the Project. The performance of the Miscellaneous Modifications and Allowance Items of Work must conform to the standards of the Contract Documents. The funding for Miscellaneous Modifications and Allowance Items of Work is an allowance only and not a compensable pay item. The Commission is solely responsible for the appropriation of the funds. The Contractor shall have no claims to such funds. The Commission will retain ownership of any such funds not used after the completion of work. The work shall be assigned and directed by the Commission's Representative in written form. Measurement, Payments, Invoicing and Pricing of Adjustments for Miscellaneous Modifications and Allowance Items of Work will be in accordance with the Contract Documents.

GC-43 OWNERSHIP AND USE OF DOCUMENTS

All Contract Documents furnished to the Contractor remain the property of the Commission. The Contract Documents are to be used only with respect to this Project and are not to be used on any other project. All Contract Documents are to be returned to the Commission upon request at the completion of the Work. The Contractor may maintain a record set of the Contract Documents for its records, but will maintain the confidentiality of the record set, except as required by law. The Contractor can use the Contract Documents for any purposes required for the Project that will not be considered publication in derogation of the common law copyright or other reserved rights of the holder.

Neither Contractor nor any Subcontractor, Sub-Subcontractor, Supplier, vendor or other person or organization performing or furnishing any of the Work under a direct or indirect contract with Commission acquires any title to or ownership rights in any of the Contract Documents. The Contractor may not reuse the Contract Documents for extensions of the Project or for any other project without written consent of the Commission.

GC-44 CHANGED CONDITIONS

Contractor shall notify the Engineer in writing of the following conditions, hereinafter called "changed conditions," promptly upon their discovery and before they are disturbed, in any event no later than seven (7) calendar days after their discovery:

(1) Subsurface or latent physical conditions at the site of Work differing materially from those indicated in this Agreement; or

(2) Unknown physical conditions at the site of the Work of an unusual nature differing materially from those ordinarily encountered and generally recognized as inherent in Work of the character provided for in the Agreement.

The Engineer shall promptly investigate the conditions, and if he finds that such conditions do materially so differ and cause an increase or decrease in Contractor's cost of, or the time required for, performance of any part of the Work under this Agreement, whether or not changed as a result of such conditions, an equitable adjustment shall be made and the Agreement modified in writing in accordance with the provisions of this Agreement, subject to the provisions regarding Change Orders, Change Directives, notice and claims procedure and excusable delays. If the Engineer determines that conditions of which he has been notified by Contractor do not justify an adjustment in compensation, he will so advise Contractor in writing. Should Contractor disagree with such determination, he may submit a notice of claim to the Engineer as provided herein and follow the claims procedures of Article GC-41.

In computing any equitable adjustment sought by Contractor, the actual costs incurred by Contractor, computed in accordance with the Force Account provisions for changes shall be the standard for determining Contractor's entitlement. Provided, however, that if the Commission shows that conditions encountered by Contractor on the Project were more favorable and less costly than what Contractor reasonably should have expected to encounter, the net effect on Contractor from both the favorable and unfavorable conditions shall be considered in determining the amount of any equitable adjustment.

GC-45 INTENTIONALLY OMITTED

GC-46 INTENTIONALLY OMITTED

GC-47 INTENTIONALLY OMITTED

GC-48 INTENTIONALLY OMITTED

GC-49 MEASUREMENT AND PAYMENT

GC-49.1 Measurement

All items of Work to be paid for at Agreement Prices per unit of measurement will be measured or certified by the Engineer.

GC-49.2 Payment at Agreement Prices

The Agreement prices for items of Work shall include full compensation for all costs of items, including the costs for any Work, Materials and Equipment incidental to the items but not specifically shown or described in the Drawings and Specifications, subject only to such express limitations as may be stated in the Specifications defining the items or prescribing payment thereof.

GC-50 HISTORICAL, SCIENTIFIC, AND ARCHEOLOGICAL DISCOVERIES

All articles of historical or scientific value, including, but not limited to, coins, fossils, articles of antiquity, which may be uncovered by Contractor during process of Work, shall become the property of Commission. Such findings shall be reported immediately to the Engineer who will determine the further operations of Contractor, the method of removal, where necessary, and the final disposition thereof.

GC-51 SEPARATE AGREEMENTS

GC-51.1 Separate Contractors

The Commission reserves the right to award other Agreements in connection with this Project. Contractor shall afford other contractors reasonable opportunity for the introduction and storage of their materials and the execution of their work and shall properly connect and coordinate his Work with theirs. If the proper execution of results of any part of Contractor's Work depends upon the work of another contractor, Contractor shall inspect and promptly report to the Engineer any defects in such work that render it unsuitable for such proper execution and results.

GC-51.2 Cooperation

The Commission may perform additional work related to the Project by itself, or it may let other contracts containing provisions similar to these. Contractor shall afford the other contractors who are parties to such contracts and/or the Commission, if it is performing the additional work itself, reasonable opportunity for the introduction and storage of materials and equipment and the execution of work and shall properly connect and coordinate his work with theirs.

GC-51.3 Review of Separate Contractor's Work

If any part of Contractor's Work depends for proper execution or results upon the work of the Commission or any separate contractor, Contractor shall, prior to proceeding with the Work, promptly report to the Engineer any apparent discrepancies or defects in such other work that render it unsuitable for such proper execution and results. Failure of Contractor so to report shall constitute an acceptance of the Commission's or separate contractor's work as fit and proper to receive the work, except as to defects which may subsequently become apparent in such work by others.

GC-51.4 Notice to Contractor

If the performance of additional work by other contractors of the Commission is not noted in the Agreement Documents prior to the execution of the Agreement, Written Notice thereof shall be given to Contractor prior to starting any such additional work.

GC-51.5 Damage to Separate Contractor

Should Contractor wrongfully delay, impact, or cause damage to the work or property of any separate contractor, Contractor shall, upon due notice, promptly attempt to settle with such other contractor by agreement, or otherwise to resolve the dispute. If such separate contractor sues or initiates a proceeding against the Commission or the Engineer on account of any delay or damage alleged to have been caused by Contractor, the Commission shall notify Contractor, who shall defend such proceedings at Contractor's expense, and if any judgment or award against the Commission or the Engineer arises therefrom, Contractor shall pay or satisfy it and shall reimburse the Commission for all costs and expenses, including without limitation, attorneys' fees, expert fees, consultant fees, court costs, and litigation or arbitration fees or expenses that the Commission has incurred.

GC-51.6 Commission's Right to Clean Up

If a dispute arises between Contractor and separate contractors as to their responsibility for cleaning up or for accomplishing coordination, the Commission may clean up and carry out such work and charge the cost thereof to Contractors responsible therefor as the Engineer shall determine to be just.

GC-52 OFFICIAL NOT TO BENEFIT

No officer or employee of the Commission shall be permitted to participate in the performance of this Agreement or receive any benefit or compensation arising out of the performance of such Agreement, and any Agreement entered into by the Commission in which any officer or employee of the Commission shall be personally interested shall be void, and no payment shall be made thereon by the Commission or any officer thereof;

but this provision shall not be construed to extend to the Agreement if made with a corporation for its general benefit.

A bribe or attempt to bribe any representative or officer of Commission by Contractor shall be considered as a breach of the Agreement in bad faith, and shall thus empower Commission to complete Work and deduct the entire cost thereof from any monies due or to become due Contractor under the Agreement.

GC-53 GRATUITIES AND KICKBACKS

The Contractor's Contract may be terminated in accordance with the Clause titled "TERMINATION FOR DEFAULT" if, after notice and hearing, the Commission determines that the Contractor, its agent, or another representative offered or gave a gratuity or kick-back to an officer, official, or employee of the Commission and intended, by the gratuity, to obtain a contract or favorable treatment under a contract.

The rights and remedies of the Commission provided in this Clause are not exclusive and are in addition to any other rights and remedies provided by law or under this Contract.

The Contractor warrants that: (1) it has not employed nor retained any company or person, other than a bona fide employee working for the Contractor, to solicit or secure the contract; and that the Contractor has not paid or agreed to pay any person, company, association, corporation, individual or firm, other than a bona fide employee working for the Contractor, any fee, commission, percentage, gift or any other consideration contingent upon or resulting from the award or making of the contract. After Notice and hearing and upon a finding in contradictions to this Paragraph constituting a breach or violation of the above warranty, the Commission has the right to terminate the contract or take other appropriate actions.

GC-54 PRECONSTRUCTION CONFERENCE

Within twenty (20) days after delivery of the executed agreement by Commission to Contractor, but before issuance of Notice to Proceed, a conference will be held to review progress schedules, to review the insurance and safety program, to establish procedures for handling Shop Drawings and other submittals and for processing progress payments, and to establish a Working understanding between the parties as to the Project.

Contractor shall submit to the Commission for approval, prior to the preconstruction conference, a preliminary schedule of Shop Drawing submittals, and certification of insurance as required by Appendix B.

GC-55 TIME OF COMPLETION AND LIQUIDATED DAMAGES

GC-55.1 Liquidated Damages

It is understood and agreed that the Commission will sustain substantial monetary and other injury and damages, including, but not limited to, increased costs, expenses and liabilities in the event of failure by Contractor to perform its Work in accordance with the Completion and any Interim Milestone Date(s) set forth in the CPM Schedule prepared in accordance with the Special Conditions. Accordingly, should Contractor not complete the Work, or any such portion thereof, within the date(s) required by the CPM Schedule initially approved by the Engineer, as they may be adjusted pursuant to the Agreement Documents, then charges shall be assessed against any money due or that may become due Contractor in accordance with the following schedule:

For Each day of delay in Substantial Completion of the entire Work: $1,000.00/ day

For Each day of delay in Final Completion of the entire Work: $500.00/ day

The amount of such charges is hereby agreed upon as fixed liquidated damages due the Commission after the expiration of the Agreement Date(s) for completion specified in the CPM Schedule for the Work or portions thereof. Contractor and its surety shall be liable for any liquidated damages in excess of the amount due Contractor on the Final Payment.

If the CPM Schedule projects an untimely completion with unexcused delay and the Commission in good faith believes that retainage will be insufficient to cover the Commission's damages, Contractor agrees that the Commission may withhold additional funds to assure the payment of the liquidated damages owed by Contractor.

GC-55.2 No Penalty

The fixed liquidated damages are not established as a penalty but are calculated and agreed upon in advance by the Commission and Contractor due to the uncertainty and impossibility of making a determination as to the actual direct, incidental and consequential damages which are incurred by the Commission as a result of the failure on the part of Contractor to complete the Work within the Agreement Time and completion date(s) specified in the Agreement Documents. Liquidated damages shall start in accordance with the above schedule upon notification to Contractor in writing that all apparent Agreement Time allowed to achieve the relevant completion date has been consumed. Liquidated Damages as they accrue will be deducted from periodic partial payments to the extent they are sufficient to cover the liquidated damages owing; provided that any excess liquidated damages owing over the periodic partial payment amount may be deducted from retainage. Such deduction shall be in addition to the retainage provided for in the Agreement Documents. The remaining amount of liquidated damages owing upon completion will be deducted from any amounts owing as Final Payment to Contractor or his surety. Any excess amount owing as liquidated damages shall be paid upon demand.

GC-56 RIGHT TO AUDIT

Contractor shall keep and maintain accurate books and records, and supporting data, documentation, correspondence, reports, instructions, Drawings, receipts, vouchers, and memoranda regarding performance of Work hereunder and including specifically, but without limitation, such information as estimates (pre and post Bid), costs incurred, labor and Materials consumed, schedules and progress records and quality control. Such books and records shall be available for inspection, audit, and copying by the Commission or its authorized representative for any purpose during the Work and for a period of three (3) years after Final Payment.

GC-57 DISPUTES

GC-57.1 Mediation

In the event of any controversy, claim, dispute or other matter in question arising out of or relating to this Agreement of the breach thereof or otherwise in connection with the Project to which this Agreement pertains, at the Commission's sole and exclusive option the parties shall, if the Commission so elects and as an express condition precedent to any party to this Agreement commencing legal action against the other relating to or arising out of the dispute, mediate the dispute utilizing a mutually agreeable mediator. Prior to commencing any legal action against the Commission, Contractor must either mediate the dispute, at the Commission's election, or obtain a written waiver from the Commission of its right to mediate.

GC-57.2 Arbitration at the Commission's Election

At the Owner's sole election, any Claim arising out of or related to the Agreement shall be subject either to binding arbitration or litigation at the Commission's option. Prior to arbitration or litigation, the parties shall endeavor to resolve Claims or disputes in accordance with the terms of this Contract.

GC-57.2.1

If Claims are not resolved by negotiation, mediation, or otherwise, and the Owner elects arbitration, the arbitration shall be held in Atlanta, Georgia and shall be in accordance with the Construction Industry Arbitration Rules of the American Arbitration Association currently then in effect or such other similar rules and organization as the Owner may elect. The demand for arbitration shall be in writing and filed with the appropriate organization selected by the Owner and shall be served on the other party to the Contract. The agreement to arbitrate shall be specifically enforceable under applicable law in any court having jurisdiction thereof. In any arbitration or litigation, the arbitrators or the Court

shall have the jurisdiction to award the Commission costs, arbitrator fees, expert fees, and attorneys' fees, and the arbitrators or the Court shall award all such fees to the Commission if it is the prevailing party.

GC-57.2.2

Except at Owner's sole discretion and with its consent, no arbitration arising out of or relating to the Agreement shall include, by consolidation or joinder or in any other manner, any other person or entity, including but not limited to the Designer and its employees and consultants, any of Contractor's subcontractors and suppliers, and any other separate contractors or suppliers. The Owner's consent or election to allow consolidation or joinder or shall not constitute consent to arbitration of any claim not subject to arbitration pursuant to this Contract.

GC-57.2.3

Any award rendered by an arbitrator or arbitrators shall be final, and judgment may be entered upon it in accordance with applicable law in any court having jurisdiction thereof.

GC-57.3 Litigation If Arbitration Not Elected

If the Owner does not elect arbitration, any Claims shall be resolved in Fulton County, Georgia Superior Court. Contractor hereby submits to jurisdiction and venue in Fulton County, Georgia, and waives all defenses based on a lack of jurisdiction and/or venue. Contractor acknowledges that this Agreement was negotiated, at least in part, in Fulton County, Georgia. In any arbitration or litigation, the arbitrators or the Court shall have the jurisdiction to award the Commission costs, arbitrator fees, expert fees, and attorneys' fees, and the arbitrators or the Court shall award all such fees to the Commission if it is the prevailing party.

GC-58 AGREEMENT ADMINISTRATION DOCUMENTS

A substantial number of documents will be required for the administration of the Agreement. Some of these documents are identified in this document and elsewhere in the Agreement Documents (such as the Payment and Performance Bond forms) and others may not be. The Engineer shall have full power and authority to designate and prepare the documents to be used and Contractor and all Subcontractors and Material Suppliers shall utilize the documents so prepared and provided to them by the Engineer and shall follow the instructions of the Engineer with respect thereto in all regards save and excepting only those documents, if any, which Contractor reasonably determines contain terms or requirements contrary to or in addition to and not reasonably inferable from the terms of the Agreement Documents. If Contractor believes that any form or

other document provided by the Engineer under the authority of this Section is subject to rejection by Contractor under the terms hereof, it shall notify the Engineer thereof within ten (10) days following his first receipt of the particular document or form giving specific reasons why the document or form is entitled to rejection. Thereafter, the form or document will be withdrawn, amended, or utilized as the Engineer finds in good faith to be appropriate after reviewing the notice provided by Contractor. All agreement administration documents may be revised at any time by the Engineer.

GC-59 MISCELLANEOUS PROVISIONS

GC-59.1 Governing Law

The Agreement shall be governed by the law of the State of Georgia.

GC-59.2 Contingent Assignment

Effective as of any termination of the Agreement, Contractor hereby assigns to Commission all of Contractor's interest in those subcontracts and purchase orders entered into by Contractor prior to termination if the Commission specifically requests such an assignment by Written Notice. All Subcontractors and Purchase Orders shall provide that they are freely assignable by Contractor to the Commission and its assigns. Commission shall be at liberty to negotiate with and engage (for itself) any Subcontractors, Suppliers, or others that Contractor dealt with prior to termination.

GC-59.3 Rights and Remedies

GC-59.3.1

The duties and obligations imposed by the Agreement Documents and the rights and remedies available thereunder shall be in addition to, and not a limitation of, any duties, obligations, rights and remedies otherwise imposed or available by law.

GC-59.3.2

No action or failure to act or to require in any one or more instances upon the strict performance of any one or more of the provisions of the Agreement Documents, or to exercise any right herein contained or provided by law by the Commission or the Engineer, shall constitute a waiver of any right or duty afforded any of them under the Agreement Documents, nor shall any such action or failure to act constitute an approval of or acquiescence in any breach hereunder, nor shall it be construed as a waiver of the right to subsequently demand strict performance or exercise such rights, and the rights shall continue unchanged and remain in full force and effect, except as may be specifically agreed in writing.

GC-59.3.3

Contractor agrees that it can be adequately compensated by money damages for any breach of this Agreement which may be committed by the Commission and hereby agrees that no default, act, or omission of the Commission, or the Engineer, shall constitute a material breach of the Agreement entitling Contractor to cancel or rescind the provisions of this Agreement or (unless the Commission shall so consent or direct in writing) to suspend or abandon performance of all or any part of the Work. Contractor hereby waives any and all rights and remedies to which it may otherwise be or become entitled, save only his right to money damages.

GC-59.4 Unenforceability of any Article

If any Article or term of the Agreement Documents is held as a matter of law to be unenforceable or unconscionable, the remainder of the Agreement shall be enforceable without such clause or term, and only the narrowest possible portion of the clause or term that is allowed by law shall be unenforceable.

GC-59.5 Obligation to Perform

Contractor shall carry on the Work and adhere to the approved current CPM Schedule during and notwithstanding all disputes or disagreements with Commission. No Work shall be delayed or postponed pending resolution of any disputes or disagreements, except as Contractor and Commission may otherwise agree in writing.

GC-59.6 Labor Relations

Work on the Project may be performed by both union and nonunion separate contractors, Subcontractors, Suppliers, and other entities and persons. In the event of any strike, picket, sympathy strike, work stoppage, or other form of labor dispute at the Project whether directed at Contractor, other separate contractors, Subcontractors, Suppliers or other persons, Contractor shall continue to perform its Work required hereby without interruption or delay. In the event Contractor fails to continue its Work without interruption or delay, because of any or such events, the Commission, in addition to all other rights it has in the Agreement Documents and at law, may terminate the Agreement after giving Contractor forty-eight (48) hours written notice of its intent to do so for reason of Contractor's failure to perform. Additionally, if Contractor is party to one or more labor agreement, Contractor shall take all reasonable action to avoid any Work stoppage, and in the event of a work stoppage, Contractor shall within twenty-four (24) hours take all legal action permitted by such labor agreements or by law in order to expedite resumption of Work on this Project.

GC-59.7 Covenant Not to Sue

Should the Commission elect to terminate the employment of Contractor for default as provided herein, then Contractor covenants that it will not file any suit or proceeding of any kind against the Commission by reason thereof until the Commission shall have either abandoned the Project or completed the Work as defined under the Agreement Documents. If Contractor should breach this "Covenant Not To Sue," then Contractor shall be liable to the Commission for all costs resulting to the Commission therefrom, including, without limitation, all attorneys' fees expended by the Commission in defending said suit or proceeding, unless a positive determination is made therein that Contractor's termination by the Commission was motivated by fraud and bad faith and was without justification of any kind.

GC-59.8 Publicity and Advertising

The Contractor will not make any announcement, take any photographs, or release any information concerning the Work, this Contract, or the Project to any member of the public, press, business entity, or any official body, unless prior written consent is obtained from the Commission's Representative. The Contractor may not erect any signs without the written approval of the Commission's Representative.

GC-60 [intentionally ommitted]

GC-61 [intentionally ommitted]

GC-62 WAGE RATES AND REPORTING PROCEDURES

GC-62.1 Certified Payrolls

Contractor shall maintain accurate payroll records and be prepared to submit certified copies for the prime contractor and all subcontractors. Payrolls reporting an employee for the first time must contain the complete name, address, and social security of the employee.

GC-62.2 Submittals

All required payrolls shall be submitted to the Office of Contract Compliance. Any questions concerning these submittals can be addressed:

Office of Contract Compliance
55 Trinity Avenue, Suite 1700
Atlanta, Georgia 30303
(404) 330-6010

GC-62.3 Wage Requirements **[intentionally deleted]**

+++ END OF GENERAL CONDITIONS +++

SPECIAL CONDITIONS

SC-1 PRECONSTRUCTION VIDEO SURVEY AND INSPECTIONS

Contractor is expressly advised that the protection of buildings, structures, equipment, electrical systems, instrumentation and related work adjacent and in the vicinity of its operations, wherever they may be, is solely its responsibility. Conditional inspection of buildings, structures, equipment, electrical systems and instrumentation shall be performed by and be the responsibility of the Contractor.

Repairs or replacement of all conditions disturbed by the construction shall be made to the satisfaction of the Engineer. This does not preclude conforming to the requirements of the insurance underwriters. Two (2) copies of surveys, photographs, videos, reports, etc., shall be given to the Engineer.

The Contractor shall retain an independent Consultant, specializing in preconstruction surveys, to conduct the required inspections. The preconstruction survey will be performed by a firm specializing in performing such surveys. The qualifications and experience of the proposed consultant shall be submitted to the Engineer for approval prior to assignment of the Services.

Perform a preconstruction video survey and inspection in advance of construction to document the existing condition of buildings, facilities, structures, utilities, roads, driveways and related work.

The video surveys and inspections shall clearly document the existing conditions and be completed before any operations have begun and subject areas disturbed by any construction activities. The video surveys and inspection notes, reports, etc. shall be submitted to the Engineer. The video surveys and inspections shall make an examination of the interior and exterior of buildings, structures, facilities and utilities, and record by notes, measurements, photographs, videos, etc., conditions which might be aggravated by construction activities. Prior to any type of blasting, video surveys and inspections of residences and other private structures existing within the survey and inspection corridor shall have been completed.

The cost of all pre-construction video surveys and inspections shall be borne by the Contractor.

SC-2 RIGHT OF WAY AND CONSTRUCTION ACCESS

The Commission will furnish all rights of way for the performance of Services included in this Agreement. Areas designated on the Agreement Drawings as the Contractor's Work Area will be provided to the Contractor for the duration of construction, without charge. The Contractor will be responsible for observing the limits of the right-of-way and shall prohibit any Services being done on or any damage to property outside the bounds of the right-of-way. Additional work and storage space, if required, shall be obtained by the Contractor at no additional costs to the Commission.

SC-3 SAFETY AND HEALTH

The Contractor shall comply with all applicable health and safety standards and provisions required by the City of Johns Creek, City of Atlanta, Fulton County, State of Georgia, and the Federal Government and its regulatory agencies. The Contractor shall maintain an accurate record of all cases of death, occupational diseases, and injury requiring medical attention or causing loss of time from work arising out of and in the course of employment on work under the Contract. This project involves work in and around operating combined and sanitary sewer systems. In these areas as well as in shafts and tunnels, the potential exists for toxic and/or explosive gases. The Contractor shall exercise caution when entering any confined space. The atmosphere shall be tested for oxygen levels, presence of chemicals, and explosivity before entry. Contractor alone shall be responsible for the safety, efficiency, and adequacy of his plant, appliances, and methods, and for any damage, which may result from their failure or their improper construction, maintenance, or operation.

A. Emergency phone numbers (fire, medical, police) shall be posted at the Contractor's phone and its location known to all.
B. Accidents shall be reported immediately to the Engineer by messenger or phone.
C. All accidents shall be documented and a fully detailed written report submitted to the Engineer after each accident.

SC-4 LAYOUT OF THE WORK AND SURVEYING

SC-4.1 General

A. The Services required include providing field engineering services, which includes establishing and maintaining survey control points and baselines as necessary to control the alignment (vertical and horizontal) and all parts of the Services within the specified tolerances, and documentation of the results.

B. The Contractor shall be responsible for the development and implementation of a surveying program capable of satisfying all Project survey and accuracy requirements. This program shall be subject to the review of the Engineer before commencement of the work. The review shall in no way release the Contractor of liabilities associated with or dependent on this part of the Services.

C. Control datum for the survey has been established by the Engineer and is indicated on the Drawings.

SC-4.2 Quality Control

A. Planning and execution of the field engineering services shall be supervised by engineers or land surveyors registered in the State of Georgia and shall be conducted by personnel with documented experience in the specific types of work required.
B. The allowable combined errors of land surveys shall be compatible with excavation, and pipe placement tolerances.

SC-4.3 Submittals Related to Contractor's Field Engineering Services

A. Submit qualifications of land surveyor supervisor(s) with detailed references made to projects requiring application of similar surveying procedures and techniques including name, address, and telephone number to the Engineer for review prior to commencement of any survey work.

B. Submit detailed description of proposed survey method, network diagrams and equipment type, accompanied with manufacturer's literature specifying probable accessories, calibration procedures, requirements and frequencies.

C. Submit shop drawings showing survey monument materials and methods of installation, preservation and recovery.

D. Submit mathematical pre-analysis to demonstrate that the required accuracies can be achieved using the proposed methods.

E. Submit, upon request, a complete and accurate log of control and survey work including documentation verifying accuracy of survey work as it progresses, and upon completion of the Work. Documentation shall include, but not be limited to, survey field books, sketches, drawings and layouts.

SC-4.4 General Requirements Related to Contractor's Field Engineering Services

A. The Engineer has established basic survey control points as shown on the Drawings. The Contractor shall examine and verify locations of survey control points, and shall notify the Engineer of any discrepancies discovered, within forty-eight (48) hours of discovery and before starting the Services.

B. Establish, verify and maintain a minimum of **three (3)** additional survey monuments for the work.. The monuments shall be permanent on site and referenced to the established survey control points. Record locations, with horizontal and vertical data, on Project Record Documents. Monuments will also be checked and verified by the construction verification surveyor. Survey notes relating to the monuments and primary control points shall be submitted to the Engineer.

C. At all times, protect, preserve and maintain survey control points used for the Services. Report to the Engineer the loss, destruction or relocation of any survey control point and replace survey control points based on original survey control. Make no changes without prior written notice to the Engineer.

D. Use equipment and implementation techniques such as forced centering techniques at survey control points as necessary to achieve required accuracies.

E. Furnish information to adjust, move or relocate existing structures, utility poles, lines, services or other appurtenances located in, or affected by, construction. Through the Engineer, coordinate with local authorities having jurisdiction.

F. Establish elevations, lines and levels. Locate and layout by instrumentation and similar appropriate means:

1. Site improvements including pavements; stakes for grading, fill and topsoil placement; utility locations, slopes and invert elevations.

2. Grid or axis for structures.

3. Foundation and wall locations, sloping floor elevations, and embedment centerlines and elevations.

G. Where the dimensions and locations of existing structures are of critical importance in the installation or connection of any part of the work, verify such dimensions and locations in the field before the fabrication of any material or embedment, which is dependent on the correctness of such information.

SC-4.5 Calibration and Data Processing

A. Calibrate all procedures and instruments as required and as recommended by the instrument manufacturer. Maintain a log showing date and type of calibration performed indicating the name of the individual performing the calibration.

B. Data reduction shall incorporate calibrations and meteorological corrections, and rigorous reduction of measurements to the ellipsoid and thence to the coordinate system. Correct distance measurements by electro-optical distance measurement instrument for scale, cyclic error, zero error, and meteorological effects. Correct azimuths using the Laplace correction and include the effect of the deflection of the vertical components on angles and azimuth measurements.

C. Data processing shall include, as required, rigorous least squares adjustments. Employ data outlier detection. Determine horizontal and vertical confidence intervals.

SC-5 DISPOSAL OF WASTE MATERIAL

The disposal of all excavated material or spoil not required for use in the permanent work shall be the responsibility of the Contractor. He shall remove all excess excavated material or spoil from the site of the Work and dispose of the same in a legal manner at no additional cost to the Commission. Burning of debris on site will not be allowed.

SC-6 REMOVAL OF CONDEMNED MATERIAL

Material on the site, which has been determined by the Engineer to be unsuitable or not in conformity with the Contract documents shall be removed from the vicinity of the work without delay and disposed of in an approved area.

If the Contractor fails to do so within forty-eight (48) hours after the receipt of notice, the condemned materials may be removed by the Commission and the cost of said removal shall be borne by the Contractor.

SC-7 DETECTION OF MOVEMENT

In order to detect any movement of buildings or structures that may be affected by his work, Contractor shall, prior to excavation, establish a system of vertical and horizontal control points on or about such buildings or structures, tied to bench marks and indices sufficiently remote to not be moved by his operations. A plan of this system shall be submitted to the Engineer for review. Reading shall be taken of these points and permanently recorded prior to the start of excavation. The City will not assume any responsibility for alleged damages to any building or structure arising from the Services performed under this Agreement.

SC-8 EXISTING UTILITIES

SC-8.1 Verification of the Location of the Existing Utilities

Representations of existing utilities, facilities, and structures in the Contract Documents are based upon the best available information. The Commission and the Engineer will not be responsible for the completeness or accuracy thereof nor for any deductions, interpretations, or conclusions drawn therefrom. The Contractor shall verify to his own satisfaction by test pit or other means, the actual location of existing utilities prior to construction in their vicinity.

A. Should the Contractor in the course of his operations encounter any underground utilities the presence of which was not previously known, or a different type than shown, he shall immediately notify the Engineer and take all necessary precautions to protect the utility and maintain continuance of service until said utilities can be adjusted by the appropriate owners.

B. Contractor will notify all public utility corporations, jurisdictional agencies, or other owners to make all necessary adjustments to public utility fixtures and appurtenances within or adjacent to the limits of construction. Delays and additional cost resulting from a failure of the Contractor to notify the utility or to provide adequate notice to the utility shall be at no additional cost to the Commission, when such facilities are indicated in the Agreement Documents, and in such case, no extension of time will be granted for delays caused by utility adjustments.

C. Damage caused to utilities either directly or indirectly by the Contractor shall be repaired and the facilities restored to their original condition to the satisfaction of the Engineer and the utility owner, at no additional cost to the Commission.

SC-8.2 Work in Vicinity of Existing Utilities

At least three (3) working days prior to starting work in the vicinity of utility structures and appurtenances, Contractor shall notify Engineer and appropriate utility companies and jurisdictional agencies. Contractor shall support and protect all utility structures and appurtenances in accordance with the requirements of the Agreement Documents and the utility companies, and shall take any other steps necessary to protect the structures from disturbance or damage.

SC-8.3 Access to Utilities Facilities

The Contractor shall at all times permit free and clear access to the various affected facilities by personnel of the utility owners or operators who are working within the limits of work for the purpose of inspection, maintenance, or providing additional service requirements, and the construction of new facilities. When personnel of the utility owners or operators are working within the limits of work to be performed by Contractor, the Contractor will not be relieved of his responsibility for the maintenance and protection of such facilities.

SC-9 WORK IN FLOOD PLAIN AREAS

The Contractor shall comply with all regulations of Section 16-26006 of the Zoning Ordinance of the City of Atlanta concerning work in Flood Hazard Districts, and Fulton County Zoning Resolutions regarding Flood Protection.

SC-10 MAINTENANCE OF TRAFFIC

Contractor shall provide, erect, maintain, and finally remove all barricades, danger warning and detour signs necessary to properly protect and divert traffic. All barricades and signs, including detour signs, shall be illuminated at night or when visibility is reduced. The Contractor will be held responsible for all damage to the Services due to failure of the signs and barricades to properly protect the Services from traffic, pedestrians, animals, and from all other sources, and whenever evidence of any such traffic is found upon the Services the Engineer will order that the Work, if in his opinion it is damaged, be immediately removed and replaced by the Contractor at no additional cost to the Commission. The devices used will be in accordance with the manual of Uniform Traffic Control Devices for Streets and Highways compiled by the State Department of Transportation. The Commission must approve haul routes.

SC-11 ENVIRONMENTAL PROTECTION

SC-11.1 General

Contractor shall conduct his operation in a manner to prevent pollution of the environment surrounding the area of work by every means possible and shall be responsible for furnishing all necessary items for fulfilling the work described herein.

SC-11.2 Material Transport

Contractor shall comply with Section 11-2021 of the Code of Ordinances of the City of Atlanta pertaining to the duties of the Contractor in hauling material over public owned rights-of-way. This includes but is not limited to, approval of proposed haul routes, prevention of dropping of materials or debris on the streets from trucks arriving and leaving the site, providing a suitable vehicle inspection and cleaning installation with permanent crew, and the removal of any material spilled in public areas at no additional cost to the local government agency.

SC-11.3 Waste Materials

No waste or erosion materials shall be allowed to enter natural or manmade water or sewage removal systems. Erosion materials from excavations, borrow areas, or stockpiled fill shall be contained within the work area. Contractor shall develop methods for control of waste and erosion, which shall include such means as filtration, settlement, and manual removal to satisfy the above requirements.

SC-11.4 Burning

No burning of waste shall be allowed.

SC-11.5: Dust Control

The Contractor shall at all times control the generation of dust by his operations. Control of dust shall be accomplished by water sprinkling or by other methods approved by the Engineer.

SC-11.6 Noise Control

The Contractor shall take every action possible to minimize the noise caused by his operation.

When required by agencies having jurisdiction, noise-producing work shall be performed in less sensitive hours of the day or week as directed by the Engineer.

The Contractor shall provide equipment that operates with the least possible noise. The use of noisy equipment is prohibited. Hoists and compressor plants shall be electrically operated unless otherwise permitted. The air intake of compressors shall be equipped with silencers, and machinery operated by gearing shall be provided with a type of gearing designed to reduce noise to a minimum. Internal combustion engines shall be equipped with mufflers in good order.

Noise generated by mobile construction equipment, stationary construction equipment, and other equipment involved in the construction of the work shall not exceed the decibel levels indicated below. Noise generated by mobile and stationary construction equipment will be measured three to 6 feet from building lines, and on the A weighing network of Type-2 general purpose sound level meter set at fast response.

	Combined Residential and Commercial
Allowable Sound Levels of Mobile Construction Equipment: - From 7 a.m. to 10 p.m., Monday thru Saturday, Except Legal Holidays - At times other than those listed above	 85 dBA 70 dBA
Allowable Sound Levels of Stationary Construction Equipment: - From 7 a.m. to 10 p.m., Monday thru Saturday, Except Legal Holidays - At times other than those noted above	 70 dBA 60 dBA

Contractor shall assure compliance by measuring noise levels as may be required.

SC-11.7 Use of Chemicals

All Chemicals used during construction or furnished for project operation, whether herbicide, pesticide, disinfectant, polymer, reactant or of other classification, must show approval of either EPA or FDA. Use of all such chemicals and disposal of residues shall be in conformance with instructions.

SC-11.8 By-Passing During Construction [INTENTIONALLY DELETED]

SC-11.9 Responsibility for Spills and Accidental Discharges

In the event that the Contractor causes or has a spill or accidental discharge for which the Commission is fined by the State of Georgia EPD, the Contractor agrees to remediate the spill or discharge immediately in accordance with current EPD regulations and to pay any fines assessed against the Commission and/or Contractor, and pay for the Commission's cost associated with efforts to remediate the situation.

SC-12 RIGHT TO OPERATE

As soon as any portion of structures and equipment are ready for use, the Commission shall have the right to operate such portion upon written notice to the Contractor by the Commission. The Commission shall also issue a certificate of completion for that portion of the work. Guarantee period on that portion of Service will begin upon issuance of certificate of completion for that portion.

Testing of equipment and appurtenance and training of Commission's personnel as specified hereinunder shall not constitute operation.

The execution of the bonds shall constitute the consent of the surety.

The Contractor shall provide an endorsement to his insurance permitting occupancy of the structures and use of equipment during the remaining period of construction.

SC-13 LIST OF MATERIALS, FIXTURES AND EQUIPMENT [INTENTIONALLY DELETED]

SC-14 CITY OF ATLANTA PROJECT SIGN [INTENTIONALLY DELETED]

SC-15 PROJECT MEETINGS

The Engineer shall schedule weekly progress meetings. The progress meetings will be held at least weekly and may be scheduled at a more frequent interval by the Engineer if necessary. Progress meetings shall be held at a location designated by the Engineer.

Progress meetings shall be attended by the Engineer, Contractor, Subcontractors as appropriate to the agenda, suppliers as appropriate to the agenda and others as required.

The meeting agenda shall generally include review and approval of minutes of previous meeting, review of work progress since previous meeting, field observations, problems, and conflicts, problems which impede Construction Schedule, review of off-site fabrication and delivery schedules, corrective measures and procedures to regain project schedule, revisions to Construction Schedule, progress and schedule of the preceding work period, coordination of schedules, review of submittal schedules and status, status of requests for information, maintenance of quality standards, pending changes and substitutions, and other business.

SC-16 CONSTRUCTION SCHEDULE

Timely performance is of the essence on this Project. The Contractor may complete the Project or any part of the Project earlier than is stipulated in the Contract and the Milestone requirements. The Contractor may schedule his work to complete earlier than required by the Contract or stipulated in the approved schedule, however, under no circumstances shall the Contractor be entitled to added compensation for delays, which occur during the originally stipulated contract period.

The Commission has purchased the entire scheduled time period by virtue of this Contract and further stipulates that only those delays which meet the tests set forth in GC-26 will be considered for adjustment and only to the extent that they delay the work past the originally contractually stipulated milestones.

SC-16.1 Procedures

A. The Work under this Contract shall be planned, scheduled, executed, reported and accomplished using the Precedence Diagramming Critical Path Method (hereinafter referred to as CPM). The work required by this section includes the requirement to prepare, maintain, and update all detailed schedules as described in this section. The CPM Schedules shall be prepared in such a manner as to permit the orderly planning, organization, and execution of the Work and be sufficiently detailed to accurately depict all the Work required by the Contract. Contractor shall resource (labor, material and equipment) and cost load its Schedule as specified herein.

B. Contractor hereby agrees that in the process of preparing its baseline schedule and monthly updates, it will consult with all key Subcontractors and suppliers to assure concurrence with the feasibility and achievability of Contractor's planned start dates, sequencing, durations, and completion dates. A copy of the computer input files, in PRX or XER format shall be submitted on diskette with each submittal. The procedures, technical details and Contractor's participation and responsibilities shall be as hereinafter described.

C. Contractor is responsible for determining the sequence of activities, the time estimates for the detailed construction activities and the means, methods, techniques and procedures to be employed. The Schedules identified herein shall represent the Contractor's best judgment of how it will prosecute the Work in compliance with the Contract requirements. Contractor shall ensure that the Schedule is current and accurate and is properly and timely monitored, updated and revised as Project conditions may require and as required by the Contract Documents.

D. Contractor's construction schedule shall be prepared using the latest version of Primavera Project Planner for Windows. Any and all costs incurred by the CONTRACTOR in researching, training and/or educating its personnel in CPM and/or P6 (or the utilization of outside consultants) shall be part of the Contractor's bid price and not reimbursed separately by the Commission

1. The Project Network Schedule Diagram, mathematical analysis, written narrative and monthly updates will be reviewed by either the Engineer or an independent consultant selected by the Engineer. Items will be reviewed for compliance with these Specifications and accurate reporting by the Contractor of work in place, resource loading and work activity durations.

2. Submit to the Engineer an accepted final CPM Construction Schedule and Final Schedule of Values including Allowance Items, allocated to the CPM Schedule activities within 45 days of the Notice to Proceed. Requirements for the final CPM Construction and Final Schedule of Values are further described hereinafter. Contractor's Application for Payment will not be approved until the final CPM Schedule and Schedule of Values have been accepted. The Contract Baseline Schedule submittal shall not show any progress until it is accepted by Engineer

SC-16.2 Standards

A. Definition: CPM, as required by this Section, shall comply with the standards outlined in the Associated General Contractors' publication, "Construction Planning and Scheduling" unless specifically changed by this Section.

B. CPM Construction Schedule: The Contractor's CPM Construction Schedule shall include a graphic time scaled logic network, computerized tabular reports and resource loading as described below. To be acceptable, the schedule must demonstrate the following:

1. A logical succession of Work from start to finish. This logical succession, when accepted, is the Contractor's work plan and, contrary to normal CPM standards, is designated as early start/early finish solely to accommodate the Primavera software.

2. Clear definition of each activity including cost, manpower, equipment and material quantities as resources. The assigned dollar value (cost loading) of each activity shall cumulatively equal the contract price.

3. Proper interfacing of related activities including submittals, major material and equipment deliveries, procurement, required permits and other constraints such as equipment or manpower/crew availability. Submittal dates must include review periods and permit schedules must include agency review and issue dates. The narrative shall explain the rationale for all constraints, lags and unusual relationships.

4. Agreement with the interim milestones, schedule coordination requirements, and completion dates indicated in the Contract Documents.

C. CPM Graphic Logic Network

1. The CPM graphic logic network or diagram shall be in the form of a time-scaled diagram of the customary precedence diagram and may be divided into a number of separate pages with suitable notation relating the interface points among the pages. Individual pages shall not exceed 34-inch by 44-inch. Notation on each activity line shall include activity descriptions, total float, and durations as a minimum.

2. All construction activities and procurement shall be indicated in a time-scaled format, and a calendar shall be shown on all sheets along the entire sheet length. Each activity shall be plotted so the beginning and completion dates of said activity can be determined graphically by comparison with the calendar scale. A legend shall be included clearly distinguishing between critical and non-critical path activities and progress to date.

D. Duration: The duration indicated for each activity shall be in units of whole working days and shall represent the single best time considering the scope of the Work and resources planned for the activity including time for holidays and inclement weather. The calendar for the network shall be in calendar days. Except for certain non-labor activities, such as submittal preparation and review, curing concrete, delivering and fabrication of materials, or other activities described specifically in the Contract, activity durations shall not exceed 14 Days, be less than one Day, nor exceed $50,000 in value unless otherwise accepted by the Engineer.

E. For all equipment and materials to be fabricated or supplied for the Project, the Contract Baseline Schedule shall show a sequence of activities including: (a) preparation of shop

drawings and sample submissions; (b) thirty (30) calendar days for review of shop drawings and samples (c) shop fabrication, delivery and storage, (d) erection or installation; and, (e) testing of equipment and materials

F. The Interim Schedule and Contract Baseline Schedule shall show dependencies (or relationships) between each activity. Each activity must have a successor and predecessor, except for the Project Start and Finish Milestone. The use of date constraints shall be limited to Contract Milestones and Contract Completion dates only, unless approved by the Engineer.

G. Contract Baseline Schedule shall contain or be able to demonstrate that the following items have been addressed: (a) the Project's name; (b) the Contractor's name; (c) revision or edition number; (d) activities of completed work, (e) activities relating to different areas of responsibility, such as subcontracted Work which is distinctly separated from that being done by the Contractor directly; (f) labor resources distinguished by craft or crew requirements; (g) equipment and material resources distinguished by equipment and material requirements; (h) distinct and identifiable subdivisions of work such as structural slabs, beams, columns; (i) locations of work within the contract limit lines that necessitates different times or crews to perform; (j) outage schedules for existing utility services that will be interrupted during the performance of the Work; (k) acquisition and installation of equipment and materials supplied and/or installed by the Owner or its separate contractors; (l) material to be stored on site; (m) Phases; and (n) Interim Milestones and the Contract Completion dates.

H. Computerized Tabular Reports: Reports shall include the following for each activity depicted in the schedule.

1. Activity ID
2. Activity Description
3. Duration (original and remaining)
4. Early Start Date
5. Early Finish Date
6. Total Float
7. Percent Complete
8. Activity Cost and Resources
9. Actual Start Date
10. Actual Finish Date

I. Project Information: Each report shall be prefaced with the following summary data.

1. Project Name
2. Contractor
3. Type of Tabulation (Initial or Updated)
4. Project Duration
5. Project Scheduled Completion Date
6. Projected Completion Date

SC-16.3 Acceptance

A. The finalized CPM Construction Schedule will be acceptable to the Engineer when it provides an orderly progression of the Work from Notice to Proceed to Final Completion

in accordance with the Contract requirements, adequately defines the Contractor's Work plan, provides a workable arrangement for processing submittals in accordance with the requirements, and properly allocates resource values for manpower, major materials, equipment and costs to each activity (free of unbalances in resources) as determined by the Engineer. Manpower may be represented as composite crews in the CPM Construction Schedule. The network diagram and tabular reports when accepted by the Engineer shall constitute the CPM Construction Schedule until revised and re-accepted.

B. When the CPM Construction Schedule has been accepted, the Contractor shall submit to the Engineer:

1. six (6) copies of the CPM graphic logic network,

2. six (6) copies of a computerized, tabular report in which activities have been sequenced by early starting date,

3. two (2) copies of the schedule on CD

4. six (6) copies of the narrative..

C. The Engineer's review and acceptance of the Contractor's CPM Construction Schedule is for conformance to the requirements of the Contract Documents only. Review and acceptance by the Engineer of the Contractor's CPM Construction Schedule does not relieve the Contractor of any of its responsibility whatsoever for the accuracy or feasibility of the CPM Construction Schedule, or of the Contractor's ability to meet interim milestone dates and the Contract completion date, nor does such review and acceptance expressly or impliedly warrant, acknowledge, or admit the reasonableness of the logic, durations, and resource value loading of the Contractor's CPM Construction Schedule.

D. The Contractor shall participate in a conference with the Engineer to review the Engineer's comments on the schedule and evaluation of the proposed network diagram, mathematical analysis and monetary value of activities. The intent is to reach a clearer understanding of the CPM and reach consensus on any revisions to be made. Any revisions necessary as a result of this review shall be resubmitted to the Engineer within 10 calendar days after the conference. The accepted schedule shall then be used by the Contractor for planning, organizing and directing the work and for reporting progress. If the Contractor desires to make changes in his method of performing the Work, he shall notify the Engineer in writing stating the reason for the changes and receive written acceptance of the change prior to putting the change into the accepted schedule.

SC-16.4 Qualifications

A. The Contractor shall demonstrate competence in the use of CPM scheduling through the submission of a fully compliant CPM Construction Schedule with the initial CPM submission. In the event the Contractor fails to so demonstrate competence in the CPM scheduling, the Engineer may direct the Contractor to employ the services of a Scheduling Firm that can demonstrate competence. The Contractor shall comply with such directive.

B. The Contractor shall use the services of scheduler who has verifiable training and credentials in preparing and maintaining a computerized CPM Construction Schedule using Primavera software as specified herein. The scheduler must qualify within the planning period.

1. Required Experience: Performed CPM scheduling on at least 2 completed construction projects of value at least 75 percent as large as this one and having at least 75 percent as many schedule items as this one. Scheduling of both projects shall have been done using Primavera software (P6 for Windows) or equal.

2. Submit the following:

    a. Descriptions of at least 2 projects of the value and complexity above.
    b. Copy of a CPM schedule from one of the previous projects.
    c. Names and telephone numbers of facility owner representative, design engineer, and construction manager for each project.
    d. Evidence supporting the above qualifications shall be submitted to the Engineer.

SC-16.5 Submittal Requirements

A. Initial submittal, revisions and monthly updates of the network diagram, mathematical analysis, and written narrative shall be submitted in six hard copies and two data copies on CD. Submittals will not be accepted unless they are complete as described herein.

B. The Contractor shall submit the following:

1. A CPM timescaled logic network, computer generated using Primavera Project Planner software (P6 for Windows).

2. Computerized Tabular Reports.

    a. Activity sort by early start, organized by facility or area.
    b. Predecessor/successor listing.
    c. Activity code dictionary.
    d. Resource code dictionary.

3. Basis of schedule narrative describing the logic and reasoning of the schedule. The narrative shall summarize the overall approach to construction sequencing, including but not limited to 1) anticipated lost days due to weather. 2) the rationale for all constraints, lags and unusual relationships. 3) the definition of labor and crews. 4) a list and durations for all major pieces of equipment and resources, and 5) work proposed to be performed on a other than single shift 5 day workweek basis

4. Resource value allocation by activity.

5. Breakdown of specific cost amount for each component of multi-component activities in the CPM Schedule in spreadsheet format (using Microsoft Excel) showing component unit quantities as well as costs. Such breakdown, when accepted by the Engineer shall constitute the Schedule of Values for the Project.

6. CD copy of entire schedule, narrative and spreadsheet.

SC-16.6 SCHEDULE ORIENTATION SESSION

A. Contractor shall, upon notification from the Engineer, attend a Schedule Orientation Session relating to the Schedules and Reports requirements for this Contract. The Schedule Orientation Session is designed to review in detail, the objectives of the Schedules and Reports requirements and the requirements. Contractor shall arrange for its Project Manager, Superintendent, and Scheduler to attend the Schedule Orientation Session.

B. The following items shall be discussed during the Schedule Orientation Session: (a) The procedures and requirements for the preparation of the Contract Baseline Schedule, and monthly updates by Contractor. (b) how the requirements of the Contract Documents will be monitored and enforced by the Engineer. (c) long-lead items and time requirements for the Work by Subcontractors will be identified and included in the Contract Baseline Schedule. (d) testing and startup. (e) coding and logic for the Contract Baseline Schedule, and (f) identification and scheduling of shop drawings and other submittals.

SC-16.7 Schedule of Values

A. Submittals

1. Contractor shall allocate a dollar value for each activity on the Contract Baseline Schedule. The dollar value for the activity shall be the cost of the Work including labor, materials and equipment. Allowances shall be loaded on activities specifically included for this purpose. No activity on the Contract Baseline Schedule shall exceed a value of $50,000, unless approved by the Engineer. The sum of all activity costs shall equal the Contract Price. Contractor shall revise the resource and value loading as necessary to gain the acceptance of the Engineer

2. The Final Schedule of Values shall incorporate all comments associated with the Contractor's Schedule/Schedule of Values submittals.

3. Submit documentation to support the values with data, which will substantiate their correctness, as requested by the Engineer.

4. The Schedule of Values, when accepted by the Engineer, shall be used as the only basis for the Contractor's Applications for Payment. The total price paid for mobilization shall be as approved by the Engineer, but in no case shall it exceed two per-cent (2%) of the total bid amount and shall be substantiated with invoices and other backup documentation.

5. The Schedule of Values shall be derived from the assigned Progress Schedule Activity Values and identified by Activity ID.

B. Form and Content of Schedule of Values

1. Identify the Schedule of Values submittal with:

   a. Title of Contract and location.
   b. Contract Number.
   c. Name and address of Contractor.
   d. Date of submission.

2. The Contractor's Schedule of Values shall list the installed value of the component parts of the Work in sufficient detail to serve as the basis for computing values for progress payments during construction.

3. Identify accounts with the location code and area code as defined in the Primavera Schedule format and list the number and title of the respective major Section of the Specifications.

4. All accounts in the Schedule of Values shall be derived from the activities in the Progress Schedule. Account data pertaining to the Schedule of Values shall, at a minimum, include the following for each Account:

   a. CPM Activity number.
   b. Account representative quantities (cubic yards of concrete, tons of steel, etc.), unit costs, person-hours, item and account dollar value.
   c. WBS code (as used Primavera Project Planner scheduling software), including location, responsibility and area codes.
   d. CSI Specification Section Number.
   e. Account Type: Lump Sum (LS), Unit Price (UP), Allowance (AL), or Change Order (CO

C. Lump Sum Accounts (LS):

1. The Lump Sum Items established in the Contractor's Bid shall be further divided into pay and progress items by the Contractor and submitted to the Engineer for approval, and as specified in Paragraph E.1 above. Payment for Lump Sum (LS) Accounts will be based upon physical progress (percent complete) for each related activity in the Progress Schedule.

2. The dollar value allocated to Lump Sum Accounts shall be representative of the Contractor's actual costs for performing the work including overhead and profit, and shall be balanced to ensure that sufficient funds are allocated for each portion of the work and shall be subject to acceptance by the Engineer.

3. In the event account values can not be agreed to between the Engineer and the Contractor, the Engineer shall have the exclusive right to determine the account dollar amounts contained in the Schedule of Values.

4. Mobilization costs shall be specifically identified in the Schedule of Values. All mobilization sub-accounts contained in the Schedule of Values must have a corresponding CPM Schedule activity. Payments for mobilization sub-accounts will be based upon lump sum (LS) values as accepted by the Engineer.

G. Unit Price Accounts (UP): Payment for Unit Price Accounts shall be based upon actual quantities of Work performed in compliance with the Contract Documents, as verified and accepted by the Engineer. Whenever the actual quantity differs from the estimated quantity on the Unit Price Accounts, the Contractor shall notify the Engineer in writing. Quantity overruns and under runs will be tracked on the Schedule of Values.

H. Allowance Accounts (AL): Payment for Allowance Accounts will be based upon invoices submitted by the Contractor subject to conditions and limitations of the Contract Documents. Refer to Section 01025, Measurement and Payment, for requirements. The Allowance shall

be adjusted to the actual amount paid for such services, and adjusted by Change Order either at the end of that phase of the Work or at the completion of the Work. The Commission will have sole discretion on determining when to make adjustments to the Allowance.

I. Cost of materials shall be assigned to the appropriate item of work, and allocated to a materials Sub-account. All materials items contained in the Schedule of Values must have a corresponding CPM Schedule activity, for various portions of the Work:
   1. Except for Allowance Accounts identified in Section 01200, each account shall include a directly proportional amount of the Contractor's overhead and profit.

   2. For accounts on which progress payments will be requested for materials suitably stored on site, break down the value into:

      a. The cost of each material delivered and unloaded.
      b. Paid invoices will be required for materials.

J. The Contractor shall include in his Schedule of Values items for site maintenance, and compliance with the terms of permit stipulations, as appropriate. These items will be monitored on a monthly basis. Non-compliance will result in monies being deducted from the appropriate items.

K. A new account will be added to the Schedule of Values for approved Change Order work. Payment for Time and Expense Change Order work (CO) shall be based upon the General and Supplementary Conditions of these Specifications.

L. The sum of all Account Values listed in the Schedule of Values shall equal the total Contract Price, excluding Allowance Items.

16.7.1 Sub-Accounts

A. Include a breakdown of major accounts into sub-accounts on which progress payments will be requested. The sub-account breakdown shall include elements for pay items/progress items as appropriate, and show the weight of each sub-account; e.g., fabrication, installation, etc., with the total weight of the sub-accounts equal to 100 percent of the major account.

B. The form of the submittal shall be consistent with the Schedule of Values, with each account identified the same as the line item in the Schedule of Values.

C. The Contractor's Schedule of Values shall list the delivered value of the products, manuals and services provided under the various Specification Sections. The lists shall be sufficiently detailed to serve as a basis for computing values for progress payments during the construction period.

D. The unit quantity for bulk materials shall include an allowance for waste.

E. The unit values for the materials shall be broken down into:

   1. Cost of the material delivered and unloaded at the site.
   2. Copies of paid invoices for component material shall be included with the payment request in which the material first appears.

F. The installed unit value multiplied by the quantity listed shall equal the cost of that account in the Schedule of Values.

G. Quantities and unit values identified in the Component Materials sub-accounts shall be used for determining progress payments only, and are not considered to be unit price pay items.

SC-16.8 Monthly Application for Payment

A. Monthly Application for Payment: Contractor shall provide monthly Schedule Update, monthly Payment Report and monthly Narrative Report as his monthly Application for Payment package.

B. Monthly Schedule Update: The Contractor shall submit, at intervals of 30 calendar days, an update of all activities in the as-planned CPM schedule. Update shall be created by updating the mathematical analysis and the corresponding computerized network diagram of the Schedule.

1. The schedule shall be updated by entering the following: Actual start and completion dates of completed activities and the actual start date and remaining duration of activities in progress.

2. The updated network diagram shall be submitted in the same format as noted in Specification Section SC-16.1, with the calendar starting from the date of the update.

3. The updated mathematical analysis shall be submitted in the same format noted in Specification Section SC-16.1.

4. The schedule update shall include an update of the cash flow projections in the same format as the original approved submittal.

5. The schedule update will state the percentage of the work actually completed and scheduled as of the report date.

C. The Monthly Payment Report shall show the activities or portions of activities completed during the reporting period, their total monetary values and the monetary values earned as a basis for the Contractor's Application for Payment. A mutually agreed upon percent complete will be assigned to each completed and partially completed activity to be used for calculating the monetary value earned to date. For activities underway, the percent complete shall not be related to the remaining duration.

D. A monthly narrative report shall be submitted including, but not limited to the following:

1. Description of work accomplished.

2. Summary of safety and quality issues occurring during the month and corrective actions taken.

3. Contractor evaluation of actual progress versus progress planned.

4. If the project is behind schedule, progress along all paths with negative float shall be reported along with the reasons for the delay.

5. A description of all revisions made to the schedule including: all accepted added, deleted, and revised activities; all logic revisions; and all duration revisions.

6. A description of the problem areas, current and anticipated delaying factors and their impact, and an explanation of corrective actions taken or proposed.

E. If the Contractor fails to submit any of the required components of the Application for Payment, the Engineer will withhold approval of the Application for Payment until such time as the Contractor submits the required components.

SC-16.9 Progress Meetings and Look-Ahead Schedules

A. For the weekly progress meetings, the Contractor shall submit a Look-Ahead Schedule. This schedule will cover four weeks: the immediate past week, the current week, and the forthcoming two weeks. This schedule will include all activities which are complete, started, are incomplete or underway, or scheduled to be worked during this four week time frame. This schedule shall list all activities from the accepted CPM Construction Schedule which are complete, are scheduled for Work during the period, are currently planned to be worked, even if out of sequence, and Work which is unfinished but scheduled to be finished. Actual start and completion dates shall be provided for the Work that has been completed the prior week; forecast start and finish dates shall be provided for the Work that is in-process or upcoming.

B. Each activity noted above shall be identified by activity number corresponding to the accepted CPM Construction Schedule and detailed description of the activity.

C. The Look-Ahead Schedule shall be delivered to the Engineer twenty-four (24) hours prior to the weekly progress meeting.

D. The Look-Ahead Schedule shall be in a format approved by the Engineer.

E. Tabular reports for manpower and equipment resources shall be provided for and with each Look-Ahead Schedule.

SC-16.10 CPM Construction Schedule Revisions

A. The Engineer may direct and, if so directed, the Contractor shall propose, revisions to the CPM Construction Schedule upon occurrence of any of the following instances:

1. The actual physical progress of the Work falls more than five percent (5%) behind the accepted CPM Construction Schedule, as demonstrated by comparison to the accepted monthly CPM Construction Schedule updates or as determined by the Engineer if a current accepted CPM Construction Schedule does not exist.

2. The Engineer considers milestone or completion dates to be in jeopardy because of “activities behind schedule”. “Activities behind schedule” are all activities that have not or cannot be started or completed by the dates shown in the CPM Construction Schedule, regardless of the existence of positive float on the activity.

3. A Change Order has been issued that changes, adds, or deletes scheduled activities or affects the time for completion of scheduled activities.

B. When the instances requiring revision to the CPM Construction Schedule occur, the Contractor shall submit the proposed revised CPM Construction Schedule within ten (10) working days after receiving direction from the Engineer to provide such Schedule. No additional payment will be made to the Contractor for preparation and submittal of proposed revised CPM Construction Schedules. However, if the Engineer accepts the proposed revised CPM Construction Schedule, it shall replace and supersede all previous CPM Construction Schedules and substitute for the next monthly CPM Construction Schedule update that would otherwise be required.

C. Revisions to the CPM Construction Schedule shall comply with all of the same requirements applicable to the original schedule.

SC-16.11 Schedule Recovery

A. If a revised CPM Construction Schedule accepted by the Engineer requires the Contractor to employ additional manpower, equipment, hours of work or work shifts, or to accelerate procurement of materials or equipment, or any combination thereof, as schedule recovery measures to meet Contract milestones, the Contractor shall implement such schedule recovery measures without additional charge to the Commission.

B. Furthermore, if efforts to recover are not deemed effective as determined by the Engineer, or if prior to submittal of the recovery schedule, the Engineer determines that critical milestones are in jeopardy, the Engineer may direct the Contractor to implement the above or any other recovery efforts at no additional costs to the Commission.

SC-16.12 Time Impact Analysis Requirement

A. When delays are experienced by the Contractor and a time extension is requested, the Contractor shall submit to the Engineer a written Time Impact Analysis illustrating the influence of all changes or all delays on the current Project completion date. The time impact analysis shall be constructed on an As-Built Schedule Analysis approach. The As-Built Schedule that is created will incorporate all actual start and finish dates, actual durations of activities, actual sequences of construction (referred to as the As-Built Logic) current as of the time the Time Impact Analysis is performed. This Time Impact Analysis shall incorporate all delays (including Engineer, Contractor and third party delays without exception) in the time frame that they actually occurred with actual logic ties. The As-Built Schedule data shall be obtained from the most recent approved monthly schedule update. The As-Built Schedule shall be created as an early start schedule with the actual start and finish dates coinciding with the early start and finish dates from the most recent approved monthly schedule update. The As-Built Schedule shall show the original activity durations equal to the actual duration and the actual logic driving all activities. The Engineer will validate this As-Built Schedule. All requests for time extension shall be based upon an analysis of this As-Built Schedule. The critical path will be established and all Engineer -caused delays on the critical path will be identified. The time extension will be based solely upon the cumulative duration of all Commission and third party caused delays that are on the critical path. Any time extensions to the project's Interim Milestone Dates, if any, shall be non-compensable time extensions only.

B. Each Time Impact Analysis shall demonstrate the estimated time impact based on the events of delay, the status of construction at that point in time, and the event time computation of all activities affected by the change or delay. The event times used in the analysis shall be those included in the latest approved update of the project schedule, in effect at the time the change or delay was encountered.

SC-17 COOPERATION WITH OTHER CONTRACTORS AND FORCES

During progress of work under this Agreement, it will be necessary for other contractors and persons employed by the Commission to work in or about the Project. The Commission reserves the right to put such other contractors to work and to afford such access to the Site of the work to be performed hereunder at such times as the Commission deems proper. The Contractor shall not impede or interfere with the work for such other contractors engaged in or about the Services and shall so arrange and conduct his work that such other contractors may complete their work at the earliest date possible.

When the Contractor and any contractor or subcontractor performing Services under or pursuant to another Commission Agreement are employed on related or adjacent work, or are using the same materials source, storage area, or disposal area, the contractor shall be responsible to the other for any injury, damage, or loss caused the other by his operations, by his unnecessary delay or hindrance of the other's work, or by his failure to complete the Services or any portion thereof within the time specified for its completion. The Contractor shall indemnify and save harmless the Commission and the Engineer, and all officers and employees of the Commission connected with the Services from all claims, suits, or actions of any nature brought on account of any injury, damage, or loss.

Contractor's responsibilities under the preceding paragraph shall be not greater as to any injury, damage, or loss than those imposed on the Contractor or subcontractor under the comparable provision of this Agreement or subcontract.

The Engineer will decide any disputed questions regarding the performance of the Services, access and cleaning up of the site, and priority in all relations between the Contractor and other contractors in utility companies, and maintenance crews.

The Contractor shall cooperate with all other contractors requiring access to the Services for the purpose of maintenance of security, temporary facilities, cleaning of the site, and like matters requiring common effort.

SC-18 EXTENDED SHIFT, WEEKEND AND HOLIDAY WORK

The Commission observes the following holidays:

New Year's Day, Martin Luther King's Birthday, Memorial Day, Independence Day, Labor Day, Veterans' Day, Thanksgiving Day and following Friday, and Christmas Day.

Should the Contractor deem it necessary to work on Saturdays, Sundays, holidays or longer than eight hours (8) per shift in order to comply with his construction schedule, or because of any emergency, the Contractor shall request permission of the Engineer to do so at least seven (7) calendar days in advance.

SC-19 PROJECT CLOSEOUT

SC-19.1 Restoration of Miscellaneous Surface Facilities

Construction operations on the Work may disturb or otherwise damage the surface contours and vegetation of natural and landscaped areas. Restoration of these areas shall be part of the Agreement. Restoration of pavements, trees, and ground vegetation is specified in the Technical Specifications.

SC-19.2 Pavement Restoration

Contractor shall secure permits from the appropriate jurisdictional Agency for all pavement restoration prepared in accordance with the requirements of the Agreement Documents and the jurisdictional Agency and submit them to the Engineer.

SC-20 EQUIPMENT SERVICE

The Contractor shall furnish the services of a competent factory representative of the manufacturer of the equipment to be installed, for the purpose of supervising and/or inspecting the installation, placing the equipment in service, and calibrating and adjusting each item of equipment. Qualification of the representative shall be appropriate to the type of equipment furnished and subject to the approval of the Engineer. Where equipment furnished has significant process complexity, engineering personnel knowledgeable in the process involved and the function of the equipment shall be furnished. These services shall be furnished in accordance with the requirements of the Technical Specifications.

When approved by the Engineer, periods of service on more than one item of equipment furnished by the same manufacturer may run concurrently. Each of these manufacturers shall furnish supervisory and/or inspection services for all equipment, which he furnishes.

During the initial operation period, a functional test shall be performed on each piece of equipment. The test shall consist of operation of the equipment on a normal duty cycle for a sufficient period of time to determine satisfactory operation (twenty-four [24] hours minimum). To the maximum extent practical, the full capabilities of all equipment shall be exercised, including remote operation, instrumented control schemes, alternate modes of operation, and emergency operation.

SC-21 CONCRETE POUR CARD

An approved concrete pour card must be obtained by the Contractor prior to the placement of concrete. The card shall be as provided to the Contractor by the Engineer. The pour card shall be completed by the contractor and approved by the Engineer before concrete is placed.

SC-22 PARTNERING STATEMENT [INTENTIONALLY DELETED]

NOT USED.

SC-23 COLOR COORDINATION

The Commission will require a color coordination of architectural materials. All coatings are to be custom matched.

SC-24 TIE-INS OR MODIFICATIONS TO EXISTING SYSTEMS

Anytime the Contractor ties into or modifies an existing system, a detailed work plan shall be required. Submittal of this work plan must be a minimum of thirty (30) days in advance of commencement of the subject work. This work plan shall include a detailed description of the work, a step-by-step plan of the modification or tie-in, a schedule, a detailed list of materials and equipment required, demonstrated communications capacity, and a listing of any gates or valves, which must be operated. Working drawings shall be submitted as required under GC-28 for any permanent or temporary structural modifications. A temporary safety plan covering the period of the work, and a listing of contingency plans and supplies, including but not limited to spill prevention planning and spill containment kits, shall be required. A coordination meeting with the Commission's plant operating staff, the Contractor, the Engineer and the Designer must be held at least seven (7) days prior to the commencement of the modification or tie-in. The day before the commencement of the modification or tie-in, a final coordination shall be held giving final detailed work assignments to all parties involved.

The Commission and the Engineer have the right to require, at no additional cost to the Commission, stand-by equipment on any item(s) deemed critical enough to delay the work. The Contractor shall have available stand-by personnel to supplement the committed forces should problems arise. The Contractor is responsible for meeting all OSHA standards including entrance and exit safety, confined space entry, fall protection, scaffolding, rigging, etc.

SC-25 NOTICES OF COMMENCEMENT

A. The Contractor shall file all "Notice of Commencement" required for this Project in accordance with O.C.G.A. § 36-91-92et. seq., as applicable, setting forth:

1. The name, address, and telephone number of the person providing the labor, material, machinery, or equipment;

2. The name and address of each person at whose instance the labor, material, machinery, or equipment is being furnished;

3. The name and location of the public work; and

4. A description of the labor, material, machinery, or equipment being provided and, if known, the Agreement Price or anticipated value of the labor, material, machinery, or equipment to be provided or the amount claimed to be due, if any.

B. The Contractor shall respond to all requests for copies of a Notice of Commencement. Should the Commission or Engineer receive such a request, this request will be forwarded to the Contractor for further handling. The name and address of the Commission shall be as stated as follows:

Atlanta-Fulton County Water Resources Commission
9750 Spruill Road
Johns Creek, Georgia 30022

C. The name and description of the Project shall be as stated in the Invitation to Bid.

SC-26 VALUE ENGINEERING CHANGE PROPOSALS [INTENTIONALLY DELETED]

NOT USED

SC-27 ENCOUNTERING HAZARDOUS OR POTENTIALLY HAZARDOUS MATERIAL DURING CONSTRUCTION ACTIVITIES

Provide all labor, materials, supplies, and incidentals to protect onsite workers and the surrounding public from exposure to potentially hazardous substances, prevent spread of potentially contaminated or hazardous substances, notify Engineer, and stop all work until notified by the Engineer.

An emergency situation or imminent hazard may include, but is not limited to, the following;

- Buried drums or containers with unknown or known toxic contents.
- Groundwater or soils of unnatural color
- Spills or leaks of chemicals, solvents, or petroleum products.
- Unusual odors
- Other perceived threats

If a potentially hazardous substance is discovered during construction activities, do not remove it from the site. Leave the potentially hazardous substance in place and stop all work in the immediate area. If the material appears to be leaking or spreading, the Contractor shall contain or abate the spread of material. Take all measures to prevent the release of the material to the environment and protect all onsite workers and the public from potential exposure.

During the course of substance containment or evacuation of site personnel, the Contractor shall protect onsite workers, non-workers, and the general public from contact with or exposure to the contaminated substances or materials.

SC-28 SUBSTITUTIONS

Whenever a Material, article, or piece of Equipment is identified on the Plans or in the Specifications by reference to manufacturers' or vendors' names, trade names, catalog numbers, etc., it is intended to establish a standard, and any Material, article, or Equipment of other manufacturers and vendors which will perform adequately the duties imposed by the general design will be considered equally acceptable, provided the Material, or Equipment so proposed is, in the opinion of the Engineer, of equal substance and function. It shall not be purchased or installed by the Contractor without the Engineer's written approval.

Whenever the design is based on a specific product of a particular manufacturer or manufacturers, the manufacturer(s) will be shown on the Drawings and/or listed in the Specifications. Any item other than those so designated shall be considered a substitution.

If the manufacturer is named in the Drawings and/or detailed Specifications as an approved manufacturer, products of that manufacturer meeting all Specification requirements are acceptable.

Approval of any substitution will be made under the following provisions:

A. If the term "OR EQUAL" follows the names of approved manufacturers, then other manufacturers desiring approval may submit the product to the Engineer for

approval during the bidding phase. Any reference to a manufacturer or list of manufacturers in the Agreement documents shall be considered to include the phrase “or equal” following such reference; provided, however, that when the list of manufacturer(s) are expressly noted with the phrase “no substitutions”, then no “or equal” substitutions shall be permitted; and when the list of manufacturer(s) is noted with the phase “equal to”, then Contractor shall be allowed to substitute only as permitted by the provisions of this section, as defined below. For any requested substitution (excluding those manufactured items subject to “equal to” qualification),the manufacturer should include the following items in this pre-submittal:

(1) Descriptive literature, including information on Materials used, minimum design standards features, manufacturing processes and facilities, and similar information, which will indicate experience and expertise in the manufacture of the product being evaluated;

(2) Performance Specifications applicable to the manufacturer's standard design, which indicate the level of performance to be expected from the product;

(3) A complete set of submittal Drawings of similar Equipment that has been completed and placed into operation;

(4) A list of existing installations of equipment similar in type and size;

(5) Evidence of technical ability of the manufacturer to design and manufacture Equipment and systems meeting project requirements. Evidence submitted shall include, at a minimum, descriptions of engineering and manufacturing staff capabilities;

(6) Information required to satisfy specified experience requirements or a copy of the bond to be submitted in lieu of experience;

(7) A complete description of field service capabilities, including the location of field service facilities which would serve the proposed facility and the number and qualifications of personnel working from that location;

A complete list of all requirements of the Drawings and Specifications with which the manufacturer cannot conform, including reasons why alternate features are considered equivalent; and

(9) All other information necessary to fully evaluate the product for consideration.

B. This pre-submittal shall reach the Engineer no later than three (3) weeks prior to the Bid date. Manufacturers will be advised of approval or rejection in writing no later than fourteen (14) days prior to the Bid date. Rejected submittals may be supplemented with additional information and resubmitted no later than one (1) week prior to the bid date. Manufacturers making supplementary submittals will be advised of approval or rejection in writing no later than three (3) days prior to the bid date.

NOTE: Bids based on Equipment, which has not received the approval of the Engineer, will render the Bidder as non-responsive and cause rejection of the Bid.

If the term "EQUAL TO" precedes the names of approved manufacturers in the Specifications, the Contractor may, after receiving the Notice to Proceed, submit Shop Drawings on the substitute product for the approval of the Engineer in accordance with General Condition GC-28.

Any Bidder intending to furnish substitute products is cautioned to verify that the item being furnished will perform the same functions and have the same capabilities as the item specified. The Bidder shall include in his bid the cost of accessory items, which may be required by the substitute product and any architectural, structural, mechanical, piping, electrical or other modifications required to accommodate the substitution.

Approval of the Engineer is dependent on his determination that the product offered is essentially equal in function, performance, quality of manufacture, ease of maintenance, reliability, service life and other criteria to that on which the design is based, and will require no major modifications to structures, electrical systems, control systems, or piping systems.

SC-29 Self-Performance

Contractor shall self-perform a minimum of fifty one percent (51%) of all on-site Work.

SC-30 TECHNOLOGY TERMS AND CONDITIONS

The following terms, conditions and definitions in this SC-26 are intended to apply and shall apply only to Work or components of Work which relate directly or indirectly to intellectual property rights, Software and other technology components required to be performed in this Agreement. To the extent that there is any conflict between the remaining portions of this Agreement and this SC- 30, then the provisions of SC-30 shall control to the extent of such conflict and only to the extent that this SC-30 applies.

SC-30.1 Acceptance of Specific Deliverables. Each Deliverable set forth on a Scope of Services requiring approval by Commission shall be subject to acceptance testing by Commission. Contractor shall demonstrate the Deliverable's compliance with the acceptance testing procedure outlined in the Agreement Documents and if applicable, that Software is operating in accordance with the specifications, functionality and Contract Documents ("Software Specifications"). If a Deliverable fails to pass the acceptance test, Contractor shall remedy each failure and shall re-tender the corrected Deliverable to Commission for re-testing according to the acceptance testing procedure. If the Deliverable is not accepted by Commission after 3 sets of acceptance tests, within 20 days of the first failed acceptance test, or by another deadline in the Scope of Services (whichever occurs earlier), then Commission may at its option:

a) set a new deadline by which the corrected Deliverable must operate in accordance with the specifications in the applicable Statement of Work, always provided that if this deadline is not met Commission may proceed under (b); or

b) terminate the Agreement by written notice to Contractor, whereupon Contractor shall immediately refund to Commission all amounts paid by Commission under the Agreement.

SC-30.2 Resources. Unless otherwise expressly provided in this Agreement, all resources shall be furnished by and be under the control of Contractor. Contractor shall be responsible, at its

sole cost, for procuring, and using such resources in proper and qualified, professional and high quality working and performing order.

SC-30.3 Work Product. Except as otherwise expressly provided in this Agreement, all reports, information, data, specifications, computer programs, technical reports, operating manuals and similar work or other documents, all deliverables, and other work product prepared or authored by Contractor or any of its contractors exclusively for the Commission under this Agreement and all intellectual property rights associated with the foregoing items (collectively, the "Work Product") shall be and remain the sole and exclusive property of the Commission. Any of Contractor's or its contractors' works of authorship comprised within the Work Product (whether created alone or in concert with Commission or Third Party) shall be deemed to be "works made for hire" and made in the course of services rendered and, whether pursuant to the provisions of Section 101 of the U.S. Copyright Act or other Applicable Law, such Work Product shall belong exclusively to Commission. Service Contractor and its contractors grant the Commission a non-exclusive, perpetual, worldwide, fully paid up, royalty-free license to all Work Product not exclusively developed for Commission under this Agreement.

If any of the Work Product is determined not to be a work made for hire, Contractor assigns to Commission, worldwide and in perpetuity, all rights, including proprietary rights, copyrights, and related rights, and all extensions and renewals of those rights, in the Work Product. If Contractor has any rights to the Work Product that cannot be assigned to Commission, Contractor unconditionally and irrevocably waives the enforcement of such rights and irrevocably grants to Commission during the term of such rights an exclusive, irrevocable, perpetual, transferable, worldwide, fully paid and royalty-free license, with rights to sublicense through multiple levels of sub-licensees, to reproduce, make, have made, create derivate works of, distribute, publicly perform and publicly display by all means, now known or later developed, such rights.

Commission shall have the sole and exclusive right to apply for, obtain, register, hold and renew, in its own name or for its own benefit, all patents, copyrights, applications and registrations, renewals and continuations and all other appropriate protection.

To the extent exclusive title or complete and exclusive ownership rights in any Work Product created by Contractor or Sub-Contractors may not originally vest in Commission by operation of Applicable Law, Service Provider shall, immediately upon request, unconditionally and irrevocably assign, transfer and convey to Commission all rights, title and interest in the Work Product.

Without any additional cost to Commission, Contractor shall promptly give Commission all reasonable assistance and execute all documents Commission may reasonably request to enable Commission to perfect, preserve, enforce, register and record its rights in all Work Product. Contractor irrevocably designates Commission as Contractor's agent and attorney-in-fact to execute, deliver and file, if necessary, any documents necessary to give effect to the provisions of this Section and to take all actions necessary, in Contractor's name, with the same force and effect as if performed by Contractor.

SC-30.4 Third Party Works. Contractor shall not use or include any Third Party Works in the Deliverables unless Contractor has obtained prior written consent to the use and/or inclusion of such Third Party Works from Commission. Where Commission approves use or inclusion of any Third Party Work in the Deliverables, Contractor shall whenever possible obtain an assignment to Commission of all Intellectual Property Rights in such Third Party Works. If it is not possible to obtain an assignment of all Intellectual Property Rights in any Third Party Works,

Contractor must obtain Commission's written confirmation in advance that it is willing to forego an assignment. If Commission agrees to forego an assignment of all Intellectual Property Rights in any Third Party Works which Contractor wishes to include in the Deliverables, Contractor shall acquire the right for Commission to use the Third Party Works for such primary or secondary purposes, and periods (with the right to sub-license). Any failure to obtain the forgoing rights must be notified to Commission in writing and specifically agreed to by Commission. In all cases, Commission shall have an option to review and approve in advance any license or procurement agreement for the use of any Third Party Works to be included in any Deliverable.

SC- 30.5 Intellectual Property Indemnification by Contractor. Contractor shall defend, indemnify and hold harmless Commission Indemnitiees, from and against any and all Losses arising from third party claims that the deliverables or software or any other item, provided or used under this Agreement by Contractor (or any Contractor agent, contractor, subcontractor or representative), or Commission's use thereof (or access or other rights thereto) in connection with the Work, Deliverables or Software infringes or misappropriates the Intellectual property rights of a third party. If any deliverable, software or other item provided by Contractor hereunder is held to constitute, or in Contractor's reasonable judgment is likely to constitute, an infringement or misappropriation, Contractor will in addition to its indemnity obligations, at its expense and option, and after consultation with Commission regarding Commission's preference in such event, either: (a) procure the right for Commission Indemnitees to continue using such deliverable, software or other item; (b) replace such deliverable, software or other item with a non-infringing equivalent, provided that such replacement does not result in a degradation of the functionality, performance or quality of the deliverable, software or other item; (c) modify such deliverable, software or other item, or have such deliverable, software or other item modified, to make it non-infringing, provided that such modification does not result in a degradation of the functionality, performance or quality of the deliverable, software or other item; or (d) create a feasible workaround that would not have any adverse impact on Commission.

SC-30.5 Data Protection. To the extent that Contractor accesses or processes any Personal Data received from or on behalf of Commission in the course of provision of the Work, Contractor shall at all times:

(a) act only on the instructions of Commission;

(b) not transfer the Personal Data to another Party without Commission's prior written consent;

(c) have in place appropriate technical and organizational security measures against unauthorized or unlawful processing, loss, destruction, damage of such Personal Data;

(d) immediately notify Commission upon any breach, potential breach, or unauthorized access to Personal Data;

(e) immediately notify Commission of any requests for information, complaints, or other communications received from any governmental agency regarding Personal Data; and

(f) upon Commission's request, facilitate Commission's interaction with governmental agencies.

SC-30.6 No Viruses. All Services and Software shall be free of viruses, worms, time bombs, logic bombs, trap doors, Trojan horses, or similar malicious instructions, that can disrupt, erase, disable, shut down, or otherwise damage any part of a computer system.

SC-30.7 No Locks, Back Doors etc. The Services and Software do not and will not contain any computer code that would automatically disable the Services, or Software or any hardware or systems, or impair, or enable Provider to impair, in any way the operation thereof based on the elapsing of a period of time, exceeding an authorized number of copies or users, advancements

to a particular date or other numeral, or other similar self-destruct mechanisms (sometimes referred to as “time bombs”, “time locks”, “locking devices” or “drop dead devices”) or that would permit Provider to access the Services, or Software or Commission’s systems to cause such disablement or impairment (sometimes referred to as a “trap door” or “back door” device).

SC-30.8 No Open Source Code. The Services and Software shall not include any “open source” code (as defined by the Open Source Initiative) or “Free” code (as defined by the Free Software Foundation) or any similar code (collectively, “Open Source Code”) or be created in such a way that such are compiled with or linked to Open Source Code, without Commission’s prior review and approval of the applicable license agreement. Contractor further represents and warrants that it shall not include Open Source Code or other similar code in the Services or Software, or create such a way, or for use with any third Party code:

(a) that would impose any requirements on how the Services, Software, or any portion thereof, is distributed, published, licensed or otherwise made available to third Parties,

(b) that would create, or purport to create, obligations for Commission with respect to the Services or Software,

(c) that would grant, or purport to grant, to any third Party any rights to or immunities under Commission’s Intellectual Property rights in the Services or Software, or

(d) that would have the effect of requiring that the Services, Software, or any portion thereof: (a) be disclosed or distributed in source code form; (b) be licensed for the purpose of making derivative works; (c) be redistributable at no charge; or (d) be licensed under any open source or Free software license or licensing scheme.

SC-30.9 Remedies for Defects. Upon notification from Commission of a defect in any Software or Services related to Software used for this Agreement, Contractor will immediately correct and repair any such breach at no charge to Commission. If Contractor is unable to do so, at Commission’s option, Contractor will accept return of the Services and Software and will refund to Commission all fees paid therefor.

SC-30-10 Intellectual Property Rights. None of the Services or Software utilized by Contractor to fulfill its obligations hereunder, nor any of the materials and methodologies used by Contractor in fulfilling its obligations hereunder, shall infringe any Third Party’s Intellectual Property Rights or privacy, publicity or other rights.

SC-30.11 Definitions. The definitions contained in GC-62.11 shall apply to all provisions contained in GC-62 and not generally to the Agreement.

“Deliverables” means the tangible and intangible materials required to be delivered by Contractor to Commission pursuant to this Agreement and any applicable Statement of Work.
“Documentation” means all information, data, descriptive materials, Software source code, technical materials, all approved specifications, Service Level descriptions and details, operational, functional and supervisory reference guides, manuals and all other information, in whatever form and regardless of the media on which it may be contained, stored or transmitted, which is developed, prepared, provided, used or otherwise available by or from Contractor or Sub-contractor’s suppliers, in connection with and applicable to the provision, use, operation and support of the Software and Services hereunder.

“Intellectual Property Rights” shall mean, on a worldwide basis, any and all now known or hereafter rights associated with works of authorship or creation, including: (a) rights of copyright, moral rights and mask work rights; (b) trademark and trade name rights and similar rights; (c) trade secret rights; (d) patents and other patent rights; (e) other rights with respect to inventions, discoveries, improvements, know-how, formulas, algorithms, processes, technical

information and other technology; (f) all other intellectual and industrial property rights of every kind or nature and however designated, whether arising by operation of law, contract, license or otherwise; and (g) all national, foreign and state registrations, applications for registration and all renewals and extensions thereof (including any continuations, continuations-in-part, divisional, reissues, substitutions and reexaminations), all goodwill associated therewith, and all benefits, privileges, causes of action and remedies relating to any of the foregoing, whether before or hereafter accrued (including, without limitation, the exclusive rights to apply for and maintain all such registrations, renewals and extensions; to sue for all past, present and future infringements or other violations of any rights relating thereto; and to settle and retain proceeds from any such actions).

“Personal Data” means data which relate to a living individual who can be identified: (a) from those data or (b) from those data and other information which is in the possession of, or is likely to come into the possession of Contractor, and includes any expression of opinion about the individual and any indication of the intentions of Contractor or any other person in respect of the individual.

“Services” includes the services, functions, responsibilities, activities, tasks, Work Product and projects to be performed and developed by Contractor as set forth in this Agreement and any Scope of Services related to Software or other technology components of the Work contemplated by this Agreement.

“Software” means the software and software specifications described in the Scope of Services other Agreement Documents, including all updates and upgrades thereto unless expressly excluded in the applicable Statement of Work, in whatever form or media, including the delivered tangible media upon which any of the foregoing are recorded, stored, transmitted or printed and used to provide the Services. References to Software shall be deemed to include the corresponding Documentation for such Software unless otherwise specifically provided.

“Third Party” means a Person other than the Parties.

“Third Party Claim” means any claim, demand, action, cause of action or other proceeding asserted by a Person other than a Party or such Party’s affiliates, whether by legal process or otherwise.

“Third Party Works” means any material created or supplied by a Third Party.

“Work Product” means any work product, creation, material, software, computer programs, images, audio, video or other items including all Deliverables and Documentation created by Contractor, either solely or jointly with Commission or Third Parties, for the benefit of Commission in connection with providing the Services, including all forms of intellectual property such as inventions, copyrightable materials and/or material protected by patent, trademark and/or other trade secret laws.

+++ END OF SPECIAL CONDITIONS +++

Jordan, Jones & Goulding
6801 Governors Lake Parkway
Building 200
Norcross, Ga 30071
T 770.455.8555 | F 770.455.7391
www.jjg.com

FC-5076
ATLANTA FULTON COUNTY WATER TREATMENT PLANT BULK HYPOCHLORITE SYSTEM AND FILTER/PLATE SETTLER IMPROVEMENTS

VOLUME II OF II

ATLANTA-FULTON COUNTY
WATER RESOURCES COMMISSION
JOHNS CREEK, GEORGIA

MAY 2010

williams-russell and johnson, inc.
engineers - planners - architects

BULK HYPOCHLORITE SYSTEM AND FILTER/PLATE SETTLER IMPROVEMENTS

GEORGIA REGISTERED No. 12150 PROFESSIONAL 25FEB10 ENGINEER LOUIS A. HETTEL

GEORGIA REGISTERED No. PE 028663 PROFESSIONAL 2/25/10 ENGINEER P. MATHIS BRADEWELL

GEORGIA REGISTERED No. 11922 PROFESSIONAL 02/25/10 ENGINEER THOMAS H. MIDDLEBROOKS

GEORGIA REGISTERED No. 019675 PROFESSIONAL 02/25/10 ENGINEER NGAN MIN KONG

STATE OF GEORGIA CHARLES PERINCHIEF, JR. 02/25/10 CERTIFICATE NO. 005493 REGISTERED ARCHITECT

GEORGIA REGISTERED PE 16028 PROFESSIONAL 2/25/10 ENGINEER VICTOR L. WOOD

GEORGIA REGISTERED No. 009533 PROFESSIONAL 02/25/10 ENGINEER BHAGU N. AHUJA

ATLANTA-FULTON COUNTY
WATER RESOURCES COMMISSION
JOHNS CREEK, GEORGIA

Vol. I of II

Invitation to Bid
Instructions to Bidders
Draft Commission-Contractor Agreement

Appendices

A EBO Requirements
B Insurance and Bonding Requirements
C Contractor Disclosure Form and Questionnaire
D Local Bidder Preference Program

Exhibits

A/A-1 Construction Legislation (to be inserted after City Council and County action)
B Required Submittals
- Authorization to Transact Business
- Bid Bond/Bid Guarantee
- Bid Documentation
- Bid Form
- Statement of Bidder's Qualifications
- Affidavit
- Insurance Coverage and Bonding Capacity
- Non-Collusion Affidavit
- Bidder Financial Statements and Other Financial Information

C Georgia Utility Contractor License
D Georgia Security and Immigration Compliance Act of 2006 Affidavits
E Performance and Payment Bonds
F Addenda (to be inserted at time of Contract Execution)

General Conditions
Special Conditions

Vol. II of II

TECHNICAL SPECIFICATIONS

Section	Title
Division 1 - General Requirements	
01010	Summary of Work
01011	Unique Requirements
01016	Occupancy
01020	Equipment Allowances
01025	Measurement and Payment
01060	Regulatory Requirements
01340	Shop Drawings, Product Data and Samples
01350	Project Document Tracking and Control System
01410	Testing Laboratory Service
01510	Temporary Facilities
01540	Job Site Security
01562	Dust Control
01580	Project Identification and Signs
01590	Field Offices
01610	Transportation and Handling
01611	Storage and Protection
01630	Substitutions and Options
01640	General Equipment and Stipulations
01645	Manufacturer Services
01655	Starting of Systems
01710	Cleaning and Waste Management
01720	Record Documents
01730	Operation and Maintenance Data
01740	Warranties and Bonds
Division 2 - Site Work	
02060	Demolition of Existing Facilities
02073	Removal of Existing Equipment and Piping
02075	Removal of Existing Concrete and Masonry
02100	Site Preparation
02112	Tree Protection
02125	Erosion and Sedimentation Control
02140	Dewatering
02150	Sheeting, Shoring and Bracing
02200	Earthwork
02224	Trench Excavation and Backfill
02228	Waste Material Disposal
02521	Concrete Curbs and Gutters
02523	Concrete Sidewalk and Driveway
02607	Manholes
02609	Resetting Manhole Frames

02610 Site Piping
02666 Piping Testing and Acceptance
02675 Disinfection of Potable Water Facilities
02710 Underdrains and Subsurface Drainage
02774 Storm Drainage System
02900 Landscape

Division 3 – Concrete

03100 Concrete Formwork
03200 Concrete Reinforcement
03250 Concrete Accessories
03300 Cast-In-Place Concrete
03602 Non-Metallic Grouting

Division 4 - Masonry

04210 Brick Masonry
04220 Concrete Unit Masonry
04270 Glass Unit Masonry

Division 5 - Metals

05102 Structural Metals
05312 Steel Roof Decking
05500 Miscellaneous Metals

Division 6 - Wood and Plastic

06100 Rough Carpentry
06610 Fiberglass Grating, Stairs, Treads, Supports and Handrails

Division 7 - Thermal and Moisture Protection

07110 Membrane Waterproofing
07150 Dampproofing
07210 Building Insulation
07222 Roof Insulation
07410 Preformed Fascia and Soffit Panels
07600 Flashing and Sheet Metal
07610 Sheet Metal Roofing
07900 Sealants

Division 8 - Doors and Windows

08225 Fiberglass Reinforced Polyester Doors
08710 Finish Hardware
08735 Weatherstripping and Thresholds

Division 9 - Finishes

09900 Painting

Division 11 - Equipment

11215 Peristaltic Type Hose Pumps
11232 Magnetically Coupled Chemical Pump
11247 Thermoplastic Vertical Sump Pump
11325 Inclined Plate Settlers
11374 Water Filter and Appurtenances

Division 13 - Special Construction

13215 Fiberglass Storage Tanks
13226 Filter Media

Division 15 - Mechanical

15050 Basic Mechanical Materials and Methods
15062 Ductile Iron Pipe and Fittings
15069 Plastic Pipe
15094 Pipe Supports and Hangers
15095 Pipe Couplings and Expansion Joints
15100 Valves
15205 Process Piping Specialties
15405 Water Supply System
15410 Sanitary Drainage System
15450 Plumbing Equipment
15835 Electric Heaters
15870 Fans
15940 Air Outlets and Inlets

Division 16 - Electrical

16000 Electrical Power and Systems
16040 Electrical Demolition
16050 Basic Electrical Materials and Methods
16111 Conduit
16120 Wire and Cable
16130 Boxes
16150 Motors
16160 Cabinets and Enclosures
16455 Grounding
16461 Dry Type Transformers
16470 Panelboards
16489 Variable Speed Drives
16510 Lighting Fixtures
16670 Lightning Protection System
16722 Fire Alarm System

16950 Testing

Division 17 - Instrumentation

17000 Instrumentation and Controls
17050 Loop Descriptions
17100 Control Panels
17120 Surge Protection
17200 Control Devices
17250 Programmable Logic Controllers
17300 Instrumentation Devices
17950 Instrument Installation

Part 1 General

1.01 Description

A. The work to be performed under this Contract shall consist of furnishing all labor, materials, tools, equipment and incidentals and performing all work required to perform maintenance upgrades to the filter and plate settler basins on Phases 1 and 2 and convert the disinfection system to bulk deliveries of sodium hypochlorite including: providing access ladders on Phase 1 plate settlers; replacing Phase 2 plate settlers; adding underdrains and/or caps to Phase 1 and Phase 2 filters; demolishing the existing chlorine gas disinfection system; adding a new bulk hypochlorite storage and feed system and storage room; and associated site, architectural, mechanical, electrical, and instrumentation and control work.

B. All work described above shall be performed as shown on the Drawings and as specified.

1.02 Project Location

The equipment and materials to be furnished will be installed at the locations shown on the Drawings.

1.03 Quantities

The Owner reserves the right to alter the quantities of work to be performed or to extend or shorten the improvements at any time when and as found necessary, and the Contractor shall perform the work as altered, increased or decreased. Payment for such increased or decreased quantity will be made in accordance with the Instructions to Bidders. No allowance will be made for any change in anticipated profits nor shall such changes be considered as waiving or invalidating any conditions or provisions of the Contract and Bond.

END OF SECTION

Part 1 General

1.01 Scope

The scope of this Section is to convey to the Contractor unique and unusual stipulations and requirements which have been established for this Project. Some of the stipulations and requirements are a result of negotiations with various entities and organizations which have an interest in this Project. Some requirements are based on technical aspects of the Project which are not otherwise conveyed to the Contractor. The provisions of this Section shall supersede the provisions of the Division 1 through 17 Specifications but shall not supersede the Bidding Requirements, Contract Forms or Conditions of the Contract.

1.02 Milestone Dates

A. The Contractor shall be required to complete the following activities by the indicated date or days after the Notice to Proceed:

Consecutive Calendar Days after Notice to Proceed	Milestone	Liquidated Damages Per Calendar Day
60	Completion of Administration Period	$1,000.00
240	Complete Sodium Hypochlorite Feed Pumps, Day Tank, and Temporary Bulk Storage and Transfer System	$1,000.00
600	Substantial Completion of All Work	$2,500.00
640	Final Completion of All Work	$1,500.00

B. Substantial Completion for the purposes of assessing liquidated damages, shall be as defined in the General Conditions and further defined here. The time at which the work (or a specified part thereof) has progressed to the point where, in the opinion of Engineer, the work (or a specified part thereof) is sufficiently complete, in accordance with the Contract Documents, so that the work (or a specified part thereof) can be utilized for the purposes for which it is intended. The terms “substantially complete” and “substantially completed” as applied to all or part of the work refer to Substantial Completion thereof. At minimum, Substantial Completion shall be defined as (i) that degree of completion of the Project’s operating facilities or systems sufficient to provide the Owner full time, uninterrupted, continuous operation of the work; and (ii) all required functional, performance, and operational or startup testing has been successfully demonstrated for all components, devices, equipment, systems, including instrumentation and controls to the satisfaction of the Engineer in accordance with the requirements of the Specifications; and (iii) all inspections required have been completed. Specific items of work that must be completed prior to the Engineer’s issuance of a certificate of Substantial Completion include, but are not limited to, the following:

1. Correcting deficient work items listed by any regulatory agencies.

2. All submittals must be received and approved by the Engineer, including, but not necessarily limited to, the following:

   a. Record documents.

   b. Factory test reports.

   c. Equipment and structure test reports.

   d. Manufacturer's Certificate of Proper Installation.

   e. Operating and Maintenance information, instructions, manuals, documents, drawings, diagrams, and records.

   f. Spare parts lists.

3. All additional warranty or insurance coverage requirements have been provided.

4. All Manufacturer/Vendor provided Operator training is complete and documented.

1.03 Submittals

A. Sequence Submittal

1. Submit a proposed sequence in accordance with the General Conditions with appropriate times of starting and completion of tasks to Engineer for review.

2. The Contractor may propose alternatives to the sequencing constraints to that shown in this Section in an attempt to reduce the disruption of the operation of the existing facility or streamline the tasks of this Contract. The Owner and Engineer are not obligated to accept any of these alternatives.

1.04 Existing Facility Operations

A. The existing facilities must of necessity remain in operation at all times. The Contractor shall ensure that his operations shall not interfere with the plant operations, public health and safety, or plant security while the new construction is in progress.

B. The Contractor shall coordinate the work with the Owner so that the construction will not restrain or hinder the operation of the existing facilities. If, at any time, any portion of the facilities are out of service, the Contractor must obtain approval from the Owner as to the date, time and length of time that portion of the facilities are out of service.

C. Connections to the existing facilities or alteration of existing facilities will be made at times when the facility involved is not in use or at times, established by the Owner, when the use of the facility can be conveniently interrupted for the period of time

needed to make the connection or alteration. No additional compensation will be provided to the Contractor should these times extend beyond the normal 40-hour, 5-day work week.

D. After having coordinated the work with the Owner, the Contractor shall prepare a submittal in accordance with the General Conditions to include the time, time limits and methods of each connection or alteration and have the approval of the Engineer before any work is undertaken on the connections or alterations.

E. Before any roadway or facilities are blocked off, the Owner's approval shall be obtained to coordinate operations for the plant.

1.05 Existing Facilities Use and Condition

A. Pipe and valve conditions may not be watertight. Valves will leak. The Contractor shall anticipate dealing with leaky existing valves when making connections or utilizing existing valves and piping.

B. Use of Owner sanitary facility or existing facilities by Contractor’s employees is not allowed.

C. The Contractor is prohibited from operating existing equipment, valves and facilities. Operation of existing equipment and opening and closing of valves shall be done by the operating firm personnel only. The Contractor shall coordinate in advance such activities, and allow time for the operating firm to perform the required work. The operating firm will be paid from the cash allowance on an hourly basis.

1.06 Project Access and Laydown Areas

A. Access to the plant site work areas shall be limited to the existing entrance from Autrey Mill Road. Other plant entrances and roads shall not be used for construction traffic without prior consent of the Commission.

B. Use designated construction access; lay down yard, and construction office site.

C. Access through plant main entrance shall be unobstructed at all times.

D. The Contractor shall be responsible for securing additional lay down area, employee parking or facilities that in his opinion is necessary for conducting the work.

E. The active construction access points to the plant shall have security measures to protect the plant. A security guard shall be provided at the work entrance to the reservoir and plant site during all working hours.

1.07 Existing Facility Equipment

A. The following equipment is currently in use at the Project site and shall be relocated by the Contractor in the location shown on the Drawings. The equipment is currently located at the site of the Project.

1. Fiberglass Reinforced Plastic (FRP) storage tank

   a. General Description: 12,000 gallon FRP spill storage tank

   b. Current Location: Containment area east of existing chlorine gas cylinder storage room

2. Security Camera

   a. General Description: Pan-tilt-zoom closed circuit security camera

   b. Current Location: Chemical unloading station.

1.08 Administration Period

A. The duration of the Administration Period is 60 consecutive calendar days, after which time the Construction Period shall automatically begin. Construction Period may begin prior to the 60 days, provided all requirements of the Administration Period have been completed, submitted, and approved by the Engineer.

B. During the Administration Period the Contractor shall be limited in site access to only the following:

1. Nondestructive field verification of existing conditions.

2. Construction of Engineer's and Contractor's temporary field offices.

C. During the Administration Period the Contractor shall complete, as a minimum, the following:

1. Issuance of contracts, subcontracts, and purchase orders for all major products and systems.

2. Complete all submittals, release for manufacture, and schedule delivery for the products or systems referenced above.

3. Prepare and submit approvable documents required by Article SC-16 of the Special Conditions, including OPS and the Schedule of Values.

4. Install Engineer's and Contractor's temporary field offices complete with all required utilities, internet, network, supplies, and furnishings required.

5. Complete software delivery and training required by Section 01350.

6. Complete and submit all preconstruction photos and videos.

1.09 Sequencing

A. General

1. The Contractor shall be solely responsible for all construction sequencing.

2. The completion of specific preliminary sequencing tasks indicated will be required prior to any significant site demolition.

B. Notify the Owner at least ten days prior to starting to relocate piping or taking existing components out of service.

1.10 Filter Media and Plate Settler Sequencing Constraints

The following construction sequencing constraints are to emphasize critical tasks of the work in this Contract. It is not a complete list of all work to be completed.

A. General Constraints

1. No more than two filter bays may be taken offline simultaneously.

2. No more than one plate settler basin may be taken offline simultaneously.

3. Coordinate purchase orders and equipment delivery with respect to the following schedule and according to manufacturer equipment lead times.

B. Sequential Order of Tasks

1. Replace the filter media and underdrains for Phase 1 for filter bays 1, 2, 3, 4, 5, and 6. Take filter bays out of service and remove and replace filter media and underdrains in pairs in sequential order of the filter bay number (i.e., bays 1 and 2, then bays 3 and 4, then bays 5 and 6). Concurrent with the filter equipment installation in each bay, install individual access ladders in bays 1 through 6.

2. Concurrent with the replacement of the filter media and underdrains in filter bays 5 and 6 of Phase 1, replace the plate settlers in Phase 2 settling basin number 8. After work in settling basin 8 is completed, replace the plate settlers in basins 7, 5, and 6, in that order. Perform all modifications to a settling basin and bring the basin online to the satisfaction of plant personnel prior to taking another basin offline.

   a. Begin modifications to plate settler basin 7 while the work is being performed on filter bays 13 and 14.

b. Begin modifications to plate settler basin 5 after all modifications have been performed on filter bays 17 and 18.

c. Begin modifications to plate settler basin 6 after all modifications have been performed on filter bays 19 and 20.

3. Directly following the replacement of the filter media and underdrains in filter bays 5 and 6 of Phase 1, replace the filter media and install IMS caps in Phase 2 filter bays 13 and 14. After work in bay 14 is completed, take filter bays 15 through 24 out of service and remove and replace filter media and add IMS caps in pairs in sequential order of the filter bay number. Thus, start and complete work on bays 13 and 14, then bays 15 and 16, then bays 17 and 18, then bays 19 and 20, then bays 21 and 22, then bays 23 and 24.

4. Directly following the replacement of the filter media and installation of the IMS caps in filter bays 23 and 24 in Phase 2, replace the filter media and underdrains for Phase 1 for filter bays 7, 8, 9, 10, 11, and 12. Replace the filter media and underdrains in pairs in sequential order of the filter bay number (i.e., bays 7 and 8, then bays 9 and 10, then bays 11 and 12). Concurrent with the filter equipment installation in each bay, install individual access ladders in bays 7 through 12.

1.11 Sodium Hypochlorite Sequencing Constraints

The following construction sequencing constraints are to emphasize critical tasks of the work in this Contract. It is not a complete list of all work to be completed. Perform demolition in accordance to the provisions of Sections 02073 and 02075 of these Specifications.

A. Demolish the empty cylinder storage area. Demolish the dividing wall between the empty cylinder storage area and the unused storage room on the south side of the room. Construct the new day tank, metering pumps, and feed piping in the existing chlorine gas cylinder room where the empty cylinder storage area was previously.

B. Install temporary bulk storage and transfer pumping in the location shown on the Drawings. Fifteen-thousand gallons of temporary bulk storage shall be provided. Bulk storage shall be provided with secondary containment consisting of either double wall tanks or spill containment berms equal to Interstate Products, Inc. The temporary bulk feed system and method of secondary containment shall be approved by the Engineer and Owner prior to connecting it to the day tank and metering pumps in the building. Following approval, connect the temporary bulk system and transfer pump to the permanent day tank and metering pumps, and bring the storage and feed systems online to the satisfaction of plant staff. Sodium hypochlorite will be furnished by the Owner.

C. Connect the raw water metering pumps to Injection Points 10 and 20. Install new feed piping and injectors as shown on the Drawings.

D. After the raw water feed to Injection Points 10 and 20 has been brought online to the satisfaction of plant staff, demolish the chlorine solution and gas equipment in the existing chlorinator room according to Phase A as shown on the Drawings. Connect the raw water feed to the existing Lime Panels feed lines, and connect the settled water feed to the existing feed lines for Injection Points 35, 39, 65, and 69. During the time when the settled water feed points are out of service, the raw water feed points and feed points in Chemical Manhole #3 will provide disinfection.

E. After the settled water feed has been brought online to the satisfaction of plant staff, demolish the chlorine solution and gas equipment and gas supply lines in the existing chlorinator room according to Phase B as shown on the Drawings. Connect the finished water feed to the existing feed lines for Injection Points 41, 42, and 72. During the time when the finished water feed points are out of service, the raw and settled water feed points will provide disinfection.

F. Demolition of the remaining chlorine gas equipment can begin once the hypochlorite feed system has been in continuous operation for a period of thirty days.

1.12 Utilities

The Contractor is responsible for procuring a 2-inch water meter for measuring water consumed by the Contractor. The Contractor shall pay the Owner for all water consumed at a cost of $2.00 per 1,000 gallons. The Contractor shall furnish monthly readings to the Resident Engineer. At any time, the Owner may limit times when and the flow at which water is available.

1.13 Permits and Easements

A. For purposes of this Contract, the Contractor shall assume all responsibilities and liabilities of the “Primary Permittee” for all land disturbance and erosion control permit requirements and shall make application for and obtain all such required permits.

B. The Contractor is solely responsible for determining and implementing the means, methods, equipment, techniques and sequences of construction to complete the work within the permit stipulations.

1.14 Work Hours and Noise Restrictions

A. Work hours for the Project shall be limited to eight hours per day, Monday through Friday, unless otherwise required for connections and switchover.

B. No Saturday or Sunday work is allowed without the written permission of the Owner. The Owner may allow 10-hour a day, 40-hour work weeks for certain segments of the work on a case-by-case basis.

C. Construction activity noise shall begin 30 minutes after sunrise, at the earliest, and shall be kept to a minimum. Work inside facilities may commence at sunrise if previously coordinated and approved by the Owner.

1.15 Contractor Management Experience Requirements

A. Project Manager – Position in direct responsible charge of Project activities, inclusive of schedule, quality, cost, staffing, and safety. Position requires a minimum of a Bachelor of Science degree plus 10 years experience in construction, or 20 years experience in construction, with no less than five years in direct project management of construction of water/wastewater facilities or industrial fluid process facilities.

B. Superintendent – Reports to Project Manager. Position requires a minimum of a Bachelor of Science degree plus 10 years experience in construction, or 15 years experience in construction, with no less than five years in direct supervision or management of construction of water/wastewater facilities or industrial fluid process facilities.

END OF SECTION

Part 1 General

1.01 Partial Occupancy By Owner

Whenever, in the opinion of the Engineer, any section or portion of the work or any structure is in suitable condition, it may be put into use upon the written order of the Engineer and such usage will not be held in any way as an acceptance of said work or structure, or any part thereof, or as a waiver of any of the provisions of these Specifications and the Contract. Pending final completion and acceptance of the work, all necessary repairs and replacements, due to defective materials or workmanship or operations of the Contractor, for any section of the work so put into use shall be performed by the Contractor at Contractor's own expense.

END OF SECTION

Part 1 General

1.01 Scope

A. The Contractor shall furnish and install the equipment identified in the Schedule of Brand Name Specified Products list at the end of this section of the Specifications. Such equipment shall be subject to all provisions of these Specifications.

B. In the event of failure of manufacture to perform, whether Goods, Special Services or schedule for such, the Contractor's sole remedy shall be against the manufacture under the terms and conditions of its procurement agreement with the manufacturer. The Owner and Engineer do not warrant the performance of the manufacturer.

C. The terms and conditions of the proposal which follows Section 11374 of the Specifications shall be considered subject to negotiations between the successful Bidder and the Seller of the products.

1.02 Costs

A. The Contractor shall include in the Bid Total the cost of the Brand Name Specified Products for the purchase of equipment which has been pre-selected by the Owner. The amount in the Bid Form shall cover the cost of the equipment and services, as specified in the indicated specification sections, and Freight-on-Board (FOB) Job Site.

B. The Contractor's applicable taxes, unloading, storage, handling, labor, installation, and overhead costs, plus profit and other expenses contemplated for the allowances shall be included in Item 1 of the Bid and not in the allowances.

C. If the terms and conditions of purchase of equipment and services differ from those given in these Contract Documents, then the Contractor shall include the cost of the differences in Item 1 of the Bid.

1.03 Adjustment of Costs

A. Should the final invoice amount from the equipment manufacturer be more or less than the specified amount of the allowance, the Contract will be adjusted by a change order. Such adjustment shall be limited to the cost directly attributable to changes authorized by the Engineer and Owner for a change in the Specifications or Drawings associated with the product.

B. The amount of change order will not recognize any changes in unloading, storage, handling, labor, installation, and overhead costs, nor profit and other expenses caused by the adjustment of the final invoice amount. The change order will recognize changes in applicable taxes.

1.04 Documentation

Submit copies of new invoices from the equipment manufacturer with each periodic payment request.

1.05 Schedule Of Brand Name Specified Products

Water Filter and Appurtenances (Porous Caps and Underdrains): Allow the amount specified in the Bid for equipment and services provided by F.B. Leopold Company as identified in Section 11374 of the Specifications and as described more fully in the proposal which follows Section 11374 of the Specifications.

END OF SECTION

Part 1 General

1.01 Scope

A. The Bid lists each item of the Project for which payment will be made. No payment will be made for any items other than those listed in the Bid.

B. Required items of work and incidentals necessary for the satisfactory completion of the work which are not specifically listed in the Bid, and which are not specified in this Section to be measured or to be included in one of the items listed in the Bid, shall be considered as incidental to the work. All costs thereof, including Contractor's overhead costs and profit, shall be considered as included in the lump sum or unit prices bid for the various Bid items. The Contractor shall prepare the Bid accordingly.

C. Work includes furnishing all plant, labor, equipment, tools and materials, which are not furnished by the Owner and performing all operations required to complete the work satisfactorily, in place, as specified and as indicated on the Drawings.

1.02 Descriptions

A. Measurement of an item of work will be by the unit indicated in the Bid.

B. Payment will include all necessary and incidental related work not specified to be included in any other item of work listed in the Bid.

C. Unless otherwise stated in individual sections of the Specifications or in the Bid, no separate payment will be made for any item of work, materials, parts, equipment, supplies or related items required to perform and complete the work. The costs for all such items required shall be included in the price bid for item of which it is a part.

D. Payment will be made by extending unit prices multiplied by quantities provided and then summing the extended prices to reflect actual work. Such price and payment shall constitute full compensation to the Contractor for furnishing all plant, labor, equipment, tools and materials not furnished by the Owner and for performing all operations required to provide to the Owner the entire Project, complete in place, as specified and as indicated on the Drawings.

1.03 Brand Name Specification Products

A. The Contractor shall include in the Bid, the amount specified in the Bid for the purchase of equipment which has been pre-selected by the Owner. These allowances shall cover the cost of the equipment and services, as specified in the indicated Specification Sections, and Freight-on-Board (FOB) Job Site.

B. The Contractor's applicable taxes, including but not limited to sales tax, unloading, storage, handling, labor, installation, and overhead costs, plus profit and other expenses contemplated for the allowances shall be included in Item 1 of the Bid and not in the allowance.

C. If the terms and conditions of purchase of equipment and services differ from those given in these Contract Documents, then the Contractor shall include the cost of differences in Item 1 of the Bid.

1.04 Cash Allowances

A. General

1. The Contractor shall include in the Bid Total all allowances stated in the Contract Documents. These allowances shall cover the net cost of the services provided by a firm selected by the Owner. The Contractor's handling costs, labor, overhead, profit and other expenses contemplated for the original allowance shall be included in the items to which they pertain and not in allowances.

2. No payment will be made for nonproductive time on the part of testing personnel due to the Contractor's failure to properly coordinate testing activities with the work schedule or the Contractor's problems with maintaining equipment in good working condition.

3. No payment shall be provided for services which fail to verify required results.

B. Should the net cost be more or less than the specified amount of the allowance, the Contract will be adjusted accordingly by change order. The amount of change order will not recognize any changes in handling costs at the site, labor, overhead, profit and other expenses caused by the adjustment to the allowance.

C. Documentation

1. Submit copies of the invoices with each periodic payment request from the firm providing the services.

2. Submit results of services provided which verify required results.

D. Schedule of Cash Allowances

1. Soils and Concrete Testing: Allow the amount provided in the Bid for the services of a geotechnical engineering firm and testing laboratory to verify soils conditions including trench excavation and backfill, and similar issues and for the testing of concrete cylinders for poured in place concrete.

2. Construction Verification Surveying

a. Allow the amount provided in the Bid for construction surveying by an independent surveying firm, selected by the Owner, to perform horizontal and vertical alignment checks at the discretion of the Owner.

b. This allowance is solely for the use of the Owner for verification of the Contractor's reference points, centerlines and work performed. The

presence of this cash allowance in no way relieves the Contractor of the responsibility of installing reference points, centerlines, temporary bench marks or verifying that the work has been performed accurately.

3. Unforeseen Work Elements: This allowance may be used, as authorized and directed by the Owner, to pay the costs of additional work, where the cost amounts are determined as specified in General Condition Article GC-42-3 for Force Account Work. This work, not shown or specified in the Drawings and Specifications bid by the Contractor and not covered by another item in the Bid Schedule, may be required in the event the Owner establishes the need for additional work deemed to be necessary for the successful completion of this Agreement.

1.05 Earthwork

A. Earth Excavation

1. No separate payment will be made for earth excavation. The cost of such work and all costs incidental thereto shall be included in the price bid for the item to which the work pertains.

2. No separate payment will be made for providing sheeting, bracing and timbering.

B. Rock Excavation: No separate payment will be made for rock excavation. The cost of such work and all associated costs shall be included in the price for the item to which it pertains.

C. Foundation Excavation

1. Costs for undercutting, foundation preparation, and removal and replacement of unsuitable material, where shown on the Drawings or specified, shall be included in the lump sum bid.

2. Payment for removal and replacement of unsuitable material which is ordered by the Engineer which is not shown on the Drawings or specified, shall be made at the unit price bid for:

   a. Replacement with Crushed Stone

   b. Replacement with Earth Material

3. No separate payment will be made for concrete backfill of trenches beneath structures. The cost of this work and all costs incidental thereto shall be included in the price bid for the item to which the work pertains.

4. Additional costs of corrective work, made necessary by unauthorized excavation of earth or rock, shall be borne by the Contractor.

D. Dewatering: No separate payment will be made for dewatering required to accomplish the work.

E. Backfilling: No separate payment will be made for backfilling or excavation, hauling and placement of borrow material. The cost of all such work and all costs incidental thereto shall be included in the unit price bid for the item to which the work pertains.

1.06 Additional Work if Ordered

A. Removal and Replacement of Unsuitable Material

1. Payment for removal and replacement of unsuitable material which is ordered by the Owner which is not shown on the Drawings or specified, shall be made at the applicable unit price bid for Removal of Unsuitable Material and Replacement With:

   a. Crushed Stone

   b. Suitable Earth Material

1.07 Alternate No. 1

The lump sum amount bid for Alternate No. 1 shall include all costs associated with replacing all material in Specification Section 11325 specified as AISI 304 Stainless Steel with AISI 316 Stainless Steel.

1.08 Alternate No. 2

The lump sum amount bid for Alternate No. 2 shall include all costs associated with furnishing and installing a 24-inch DIP and butterfly valve in Flocculation-Settling Basin No. 1 as shown on the Drawings.

1.09 Alternate No. 3

The lump sum amount bid for Alternate No. 3 shall include all costs associated with furnishing and installing perestaltic type tube pump equipment specified in Section 11215 manufactured by Masterflex in lieu of Watson-Marlow Bredel.

END OF SECTION

Part 1 General

1.01 Scope

A. Permits and Responsibilities: The Contractor shall, without additional expense to the Owner, be responsible for obtaining all necessary licenses and permits, including building permits, and for complying with any applicable federal, state, county and municipal laws, codes and regulations, in connection with the prosecution of the work.

B. The Contractor shall take proper safety and health precautions to protect the work, the workers, the public and the property of others.

C. The Contractor shall also be responsible for all materials delivered and work performed until completion and acceptance of the work, except for any completed unit of construction thereof which may heretofore have been accepted.

END OF SECTION

SEE GENERAL CONDITITIONS ARTICLE GC-28.

Part 1 General

1.01 Scope

A. The Contractor shall use Project Document Tracking and Control System (DTCS) which will be coordinated by the Engineer as stated below. The primary function of the system is to facilitate timely processing and approval of the contract documentation in coordination with the Overall Project Schedule (OPS) established by these Specifications and the Contractor. This system will utilize Oracle Primavera Project Management (P6) for Critical Path Method (CPM) scheduling, Claim Digger for schedule review and comparison, Oracle Primavera Contract Management for document tracking and control, and Lynx Enterprise for digital photographic management.

B. The Contract Management document tracking and control software will:

1. Facilitate communication among the Owner, Engineer and Contractor;

2. Facilitate turn-around time with regard to responses and approvals;

3. Provide a central location for Project information and facilitate the Project participants in performing their tasks based on the latest Project data;

4. Provide a standard system of Project reporting and administration with accountability.

C. The DTCS and the CPM schedule databases will both be physically located in the Norcross office of the Engineer.

D. The Owner, Contractor and Engineer will utilize the system to create the required Project documents, including monthly Project status reports. The Project documents generated by the Owner, Contractor and Engineer shall be created and maintained within the DTCS database. The system will be used to create and track the following documents:

1. Project Contact List: Addresses, phone numbers, personnel contacts, etc.

2. Shop drawing submittal log.

3. Transmittals.

4. Requests for Information & Answers (RFIs).

5. Change Documents, Including:

a. Requests for Proposal (RFPs).

b. Proposed Changes (PCOs).

c. Change Negotiation Memos (CNMs).

d. Change Order Requests (CORs).

e. Change Orders (CO).

f. Allowance Directives (ADs)

6. Daily Reports: Integrated with the Overall Project Schedule, including Contractor's daily reports and Engineer's reports.

7. Field Orders and Clarification Memos.

8. Notices of Non-Compliance.

9. Construction Issue Memos.

10. Punchlists.

11. Meeting Minutes and Agendas.

12. Correspondence.

13. Progress Payments (integrated with cost-loaded P6 schedule).

14. Work plans.

15. Start-up plans.

16. Equipment Operation and Maintenance Training.

17. Spare Parts.

18. Equipment Vendor other requirements.

E. Software

1. The Contractor shall include in its bid the cost for procuring software and current licenses of the following software programs:

a. Oracle Primavera Contract Management - One user license, plus user access fees. See below for training requirements and user access fees. Version is as determined by the Engineer.

b. Oracle Primavera P6 - Two Level Four licenses shall be provided. Version is as determined by the Engineer. Contractor shall obtain an Oracle Primavera P6 license for its own use in developing and updating the

schedule submittals. Use by the Contractor of Primavera P3 or other scheduling software for developing the schedule submittals is not acceptable.

c. Claim Digger - This application is included in the P6 software.

d. Lynx Enterprise Digital Photographic Management Software: Two "Remote" licenses, one of which shall be turned over to the Engineer. One shall be retained by the Contractor for use during the Project and turned over to the Engineer at the end of the Project. Version is as determined by the Engineer.

2. The Contractor shall also purchase technical support, maintenance, and upgrades for the full duration of the Project for all of the DTCS software, inclusive of Oracle Primavera Contract Management, P6, Claim Digger, and Lynx Enterprise.

3. The Contractor shall include in its Bid the cost for user access to the Project database a total of six discrete user accounts which will be created and provided to the Contractor at a total cost of $400.00 per month, rounded up to the nearest full month and extended for the full duration of the Contract. This extended amount shall be prepaid at the start of the Project. Additional discrete users may be added during the course of the Project, each at a cost of $75.00 per month, with a minimum enrollment period of 12 months. The Contractor will be responsible for additional charges based upon the monthly user access fee in the event the Contract completion date is extended.

a. e.g. 1: Initial 12 month Contract - Contractor desires seven user accounts; first six users at $400.00/month x 12 months = $4,800.00; additional single user at $75.00/month x 12 months = $900.00; total amount to be prepaid on Notice to Proceed date = $5,700.00

b. e.g. 2: Initial 12 month Contract – Contractor initially desires six user accounts; first six users at $400.00/month x 12 months = $4,800.00; total amount to be prepaid on Notice to Proceed date = $4,800.00. Four months into project, Contractor desires two additional discrete users; two users at $75.00/month each x 12 months (minimum) = $1,800.00 to be paid prior to creation of user accounts.

4. Other software is not acceptable.

5. Ownership and registration of all software licenses shall be assigned to and retained by the Engineer. Contractor shall provide a release on its letterhead, identifying the licenses that are being assigned to the Engineer, and shall also provide documentation that licenses and maintenance fees have been paid for the full duration of the Project. No payment will be made to the Contractor until the release and documentation are received.

6. The costs for all Oracle Primavera software and maintenance fees shall be paid to Jordan, Jones & Goulding, referencing a Project number identified at the Pre-Construction Conference. Jordan, Jones & Goulding will obtain the licenses directly. This fee is to be prepaid on Notice to Proceed date.

7. Lynx Enterprise software may be obtained by contacting the company directly at 877-955-7711 ext. 83.

8. Software shall be delivered to the Engineer within 15 days after the Notice to Proceed.

F. The Contractor shall attend a minimum two-day training session on the operation of Contract Management, provided by an Oracle Primavera Authorized Trainer. This training shall be scheduled during the Pre-Construction Conference, and take place no later than one week following the NTP. The Contractor shall include in its Bid the cost of this training session (fee for the Oracle Primavera Authorized Trainer) as well as up to twelve sets of training documentation. The cost of this fee is $6,000 and is to be prepaid on Notice to Proceed date. The training session shall be held at the Jordan, Jones & Goulding offices in Norcross, Georgia, unless otherwise designated by the Engineer, and shall be attended by the Contractor (limited to six participants) as well as the Owner (four participants) and the Engineer (two participants). Contractor will be responsible for the cost of training for additional members of their firm or future retraining, as may be deemed necessary by the Contractor.

1.02 System Definitions and Descriptions

A. Submittals/Shop Drawings

1. Requirements: This Section of the Specifications specifies supplemental requirements to Section 01340, related to the processing of submittals and shop drawings. The Engineer will monitor and manage submittal processing. The DTCS shall be utilized to log and track submittals, generate transmittal letters, and generate dunning letters through the review process.

2. Submittal Log: The Engineer will create the submittal log and enter it into the DTCS utilizing the Contract Management program. The log will list all of the submittals required for review by the Engineer. Within 15 days of the Notice to Proceed, the Engineer will provide the Contractor with the submittal log. The Contractor shall have 15 days to review the log and propose amendments. The Contractor may wish to expand the log and alter the packaging requirements. The Engineer will review the proposed amendments and adjust the log if it deems the amendments reasonable.

3. Submittal Identification and Packaging: Submittals shall be incorporated into packages, with numbering as follows: XXXXX.YY, where ‘X’ denotes the applicable specification section and ‘Y’ denotes the individual submittal number for that particular specification section, beginning with 01. The initial submittal shall be identified in Contract Management as “Latest Revision” 000.

Subsequent re-submittals shall be identified 001, 002, etc. Packages shall be identified as follows: XXXXXAA; where 'X' denotes the applicable specification section and 'A' indicates which submittals must be submitted together in a single package. The Engineer will log and track all submittals utilizing the DTCS. Each review cycle shall be entered into the DTCS. The Contractor shall identify as an activity in the CPM schedule, all major equipment submittals as well as those involving complex reviews and long lead deliveries. Submittal schedule information shall be updated monthly with the Contractor's updated Project CPM schedule.

4. Samples: A list of all required sample submittals will be entered into the DTCS by the Engineer. Sample submittals shall be identified as individual submittals within the submittal packages with numbering as specified above.

5. Guarantees/Warranties: A list of all required Guarantee/Warranty submittals will be entered into the DTCS by the Engineer. These submittals shall be identified as individual submittals within the submittal packages with numbering as specified above.

6. Operation and Maintenance Manuals: A list of all required Operation and Maintenance Manual (O&M) submittals will be entered into the DTCS. These submittals are individual submittals in accordance with Specification Section 01730, rather than the corresponding equipment section.

7. Test Reports: These submittals will be identified as individual submittals within the submittal packages identified with numbering as specified above.

8. Submittal Procedures: The Contractor shall prepare all submittal packages utilizing the submittal numbering system, description and packaging conventions described above. Submittals prepared by the Contractor, which fail to follow the conventions described above, will be returned "un-reviewed". After the submittal log has been assembled, reviewed and implemented, should the Contractor determine that a submittal that is not listed in the log is required, the Contractor shall consult with the Engineer to determine if the submittal should be added to the log. If so, the Engineer will determine the submittal number, description and packaging required and add the submittal and package to the log.

9. Submittal Transmissions: To the maximum extent possible, transmit submittals to the Engineer electronically. Exceptions are samples and color charts. Other exceptions to the electronic format requirement must be approved by the Engineer. Electronic and hard copies of the O&M submittals shall be provided in accordance with Section 01730. The electronic submittal data file shall be attached to the submittal in the Contract Management program. The Contractor shall transmit the submittal to the Engineer by logging in the submittal and attached electronic submittal in Contract Management DTCS and sending an e-mail notification of the logged submittal to the Engineer's Document Control Technician (DCT).

B. Transmittal Log

1. General: The Engineer will monitor and manage the transmittal log. All Project transmittals shall be created electronically and are automatically numbered sequentially and logged into the DTCS as they are created. The Contractor shall generate transmittals for transmitting submittals, reports and other data to the Engineer.

2. Requests for Information (RFIs): The Contractor shall be responsible for generating RFIs in the Contract Management program. The Contractor shall e-mail the RFI to the Engineer. The Engineer will monitor and manage the RFI log and answer directly within each RFI. The DTCS will track “Ball in Court”, date of original generation and response date for all RFIs. In addition, the RFIs will reference the relative Specification Section and Drawings. The Engineer will coordinate the answers to RFIs based upon a review of the Contract Documents. The DTCS will identify the date of the request, the originator, the party responsible for a response and the date of the response.

C. Change Documents: Change documents include Request for Proposals (RFPs), Proposed Change Orders (PCOs), Change Negotiation Memos (CNMs), change Order Requests (CORs) Change Orders (COs), and Allowance Directives (ADs). All change documents will be generated within the “Change Management” module of the DTCS and will be monitored and managed by the Engineer. The DTCS will track “Ball in Court” status of all change documents. Following Owner acceptance and formal execution of a Change Order Request, the Change Order or Allowance Directive will be generated within the ”Change Orders/Allow Dir” module of the DTCS and, upon Owner approval, integrated with the monthly payment requisition form.

D. Daily Reports: The Contractor shall create daily reports. The Contractor shall produce the daily reports in Contract Management, thereby entering the reports into the DTCS. The Contractor shall complete each daily report no later than 10:00 a.m. of the subsequent day that Contractor or subcontractor performed work under the Contract. The Contractor shall also provide hard copies of all daily reports on a weekly basis. The hard copies must bear the signature of the author of the report. Required information shall include the Contractor’s name, date the work was performed, description of the work performed, equipment on site and whether or not it was utilized, field force, visitors, key materials and equipment delivered, a list of the scheduled activities utilizing the P6 schedule activity codes, and the predominant weather conditions, specifying the impact of those conditions to the work and the duration of the impact. Daily reports which fail to either link work activities to the active P6 schedule, or list all of the required information stated above will not be acceptable.

E. Construction Issue Memos and Notices: The Engineer will monitor and manage the Issues and Notices log. Construction Issue Memos and Notices will identify the responsible “ball in court” party, date of issue or notice, and track the item through the assignment of a sequential numbering system.

F. Punchlists: The Engineer, who will monitor and manage the punchlist log, will create

Punchlists for each area shown in the Project Drawings within the DTCS. The Contractor shall electronically update the punchlist items that have been assigned to the Contractor in the DTCS.

G. Meeting Minutes and Agenda: The Engineer will monitor and manage the meeting minutes process. The Contractor is responsible for utilizing meeting minutes and responding to meeting minutes items assigned to the Contractor. Meeting minutes will be available in the DTCS.

H. Correspondence Log: The Engineer will monitor and manage the correspondence log. All Project correspondence shall be generated utilizing the Contract Management software and logged into the DTCS system.

I. The Contractor shall create the initial payment requisition document electronically by inputting the activity identification numbers and approved scheduled values from the SOV and OPS into the Contract Management program's payment requisition schedule of values. Each payment requisition shall be generated from updated progress data from the current Oracle Primavera P6 OPS. On a monthly basis, the Contractor shall meet with the Engineer to discuss and agree on the actual progress of the work. The Contractor shall update the OPS to reflect the agreed upon progress. Once the OPS has been updated, the Contractor shall e-mail that update to the Engineer. Upon receiving the updated OPS, the Engineer shall generate each payment requisition, subsequent to the initial requisition described above. Maintenance of the record documents by the Contractor shall be verified before processing will be approved. Failure of the Contractor to maintain record documents, properly prepare daily reports and submit project schedule updates will be just cause for withholding of the monthly or final payments.

END OF SECTION

Part 1 General

1.01 Scope

A. This Section includes testing which the Owner may require, beyond that testing required of the manufacturer, to determine if materials provided for the Project meet the requirements of these Specifications.

B. This work also includes all testing required by the Owner to verify work performed by the Contractor is in accordance with the requirements of these Specifications, i.e., concrete strength and slump testing, soil compaction, etc.

C. This work does not include materials testing required in various Sections of these Specifications to be performed by the manufacturer, e.g., testing of pipe.

D. The testing laboratory or laboratories will be selected by the Owner. The testing laboratory or laboratories will work for the Owner.

1.02 Payment for Testing Services

A. The cost of testing services required by the Contract to be provided by the Contractor shall be paid for by the Owner i.e., concrete testing, soil compaction, and asphalt testing.

B. The cost of additional testing services not specifically required in the Specifications, but requested by the Owner or Engineer, shall be paid for by the Owner.

C. The cost of material testing described in various sections of these Specifications or as required in referenced standards to be provided by a material manufacturer, shall be included in the price bid for that item and shall not be paid for by the Owner.

D. The cost of retesting any item that fails to meet the requirements of these Specifications shall be paid for by the Contractor. Retesting shall be performed by the testing laboratory working for the Owner.

1.03 Laboratory Duties

A. Cooperate with the Owner, Engineer and Contractor.

B. Provide qualified personnel promptly on notice.

C. Perform specified inspections, sampling and testing of materials.

1. Comply with specified standards, ASTM, other recognized authorities, and as specified.

2. Ascertain compliance with requirements of the Contract Documents.

D. Promptly notify the Engineer and Contractor of irregularity or deficiency of work which are observed during performance of services.

E. Promptly submit three copies (two copies to the Engineer and one copy to the Contractor) of report of inspections and tests in addition to those additional copies required by the Contractor with the following information included:

1. Date issued

2. Project title and number

3. Testing laboratory name and address

4. Name and signature of inspector

5. Date of inspection or sampling

6. Record of temperature and weather

7. Date of test

8. Identification of product and Specification Section

9. Location of Project

10. Type of inspection or test

11. Results of test

12. Observations regarding compliance with the Contract Documents

F. Perform additional services as required.

G. The laboratory is not authorized to release, revoke, alter or enlarge on requirements of the Contract Documents, or approve or accept any portion of the work.

1.04 Contractor Responsibilities

A. Cooperate with laboratory personnel, provide access to work and/or manufacturer's requirements.

B. Provide to the laboratory, representative samples, in required quantities, of materials to be tested.

C. Furnish copies of mill test reports.

D. Furnish required labor and facilities to:

1. Provide access to work to be tested;

2. Obtain and handle samples at the site;

3. Facilitate inspections and tests;

4. Build or furnish a holding box for concrete cylinders or other samples as required by the laboratory.

E. Notify the laboratory sufficiently in advance of operation to allow for the assignment of personnel and schedules of tests.

F. Laboratory Tests: Where such inspection and testing are to be conducted by an independent laboratory agency, the sample(s) shall be selected by such laboratory or agency, or the Engineer, and shipped to the laboratory by the Contractor at Contractor's expense.

G. Copies of all correspondence between the Contractor and testing agencies shall be provided to the Engineer.

1.05 Quality Assurance

Testing shall be in accordance with all pertinent codes and regulations and with procedures and requirements of the American Society for Testing and Materials (ASTM).

1.06 Product Handling

Promptly process and distribute all required copies of test reports and related instructions to insure all necessary retesting or replacement of materials with the least possible delay in the progress of the work.

1.07 Furnishing Materials

The Contractor shall be responsible for furnishing all materials necessary for testing.

1.08 Code Compliance Testing

Inspections and tests required by codes or ordinances or by a plan approval authority, and made by a legally constituted authority, shall be the responsibility of, and shall be paid for by the Contractor, unless otherwise provided in the Contract Documents.

1.09 Contractor's Convenience Testing

Inspection or testing performed exclusively for the Contractor's convenience shall be the sole responsibility of the Contractor.

1.10 Schedules for Testing

A. Establishing Schedule

1. The Contractor shall, by advance discussion with the testing laboratory selected by the Owner, determine the time required for the laboratory to perform its tests and to issue each of its findings, and make all arrangements for the testing laboratory to be on site to provide the required testing.

2. Provide all required time within the construction schedule.

B. When changes of construction schedule are necessary during construction, coordinate all such changes of schedule with the testing laboratory as required.

C. When the testing laboratory is ready to test according to the determined schedule, but is prevented from testing or taking specimens due to incompleteness of the work, all extra costs for testing attributable to the delay will be back-charged to the Contractor and shall not be borne by the Owner.

1.11 Taking Specimens

Unless otherwise provided in the Contract Documents, all specimens and samples for tests will be taken by the testing laboratory or the Engineer.

1.12 Transporting Samples

The Contractor shall be responsible for transporting all samples, except those taken by testing laboratory personnel, to the testing laboratory.

END OF SECTION

Part 1 General

1.01 Scope

A. Temporary facilities required for this work include, but are not necessarily limited to:

1. Temporary utilities such as water and electricity.

2. First aid facilities.

3. Sanitary facilities.

4. Potable water.

5. Temporary enclosures and construction facilities.

6. Temporary heat.

B. Temporary utilities for field offices shall be as specified in Section 01590 of these Specifications.

1.02 General

A. First aid facilities, sanitary facilities and potable water shall be available on the Project site on the first day that any activities are conducted on site. The other facilities shall be provided as the schedule of the Project warrants.

B. Maintenance: Use all means necessary to maintain temporary facilities in proper and safe condition throughout progress of the work. In the event of loss or damage, immediately make all repairs and replacements necessary, at no additional cost to the Owner.

C. Removal: Remove all such temporary facilities and controls as rapidly as progress of the work will permit.

1.03 Temporary Utilities

A. General

1. Provide and pay all costs for all water, electricity and other utilities required for the performance of the work.

2. Pay all costs for temporary utilities until Project completion.

3. Costs for temporary utilities shall include all power, water and the like necessary for testing equipment as required by the Contract Documents.

B. Temporary Water: Provide all necessary temporary piping, and upon completion of the work, remove all such temporary piping. Provide and remove water meters.

C. Temporary Electricity

1. Provide all necessary wiring for the Contractor's use.

2. Furnish, locate and install area distribution boxes such that the individual trades may use, their own construction type extension cords to obtain adequate power, and artificial lighting at all points where required by inspectors and for safety.

1.04 First Aid Facilities

The Contractor shall provide a suitable first aid station, equipped with all facilities and medical supplies necessary to administer emergency first aid treatment. The Contractor shall have standing arrangements for the removal and hospital treatment of any injured person. All first aid facilities and emergency ambulance service shall be made available by the Contractor to the Owner and the Engineer's personnel.

1.05 Sanitary Facilities

Prior to starting the work, the Contractor shall furnish, for use of Contractor's personnel on the job, all necessary toilet facilities which shall be secluded from public observation. These facilities shall be either chemical toilets or shall be connected to the Owner's sanitary sewer system. All facilities, regardless of type, shall be kept in a clean and sanitary condition and shall comply with the requirements and regulations of the area in which the work is performed. Adequacy of these facilities will be subject to the Engineer's review and maintenance of same must be satisfactory to the Engineer at all times.

1.06 Potable Water

The Contractor shall be responsible for furnishing a supply of potable drinking water for employees, subcontractors, inspectors, engineers and the Owner who are associated with the work.

1.07 Enclosures and Construction Facilities

Furnish, install and maintain for the duration of construction, all required scaffolds, tarpaulins, canopies, steps, bridges, platforms and other temporary construction necessary for proper completion of the work in compliance with all pertinent safety and other regulations.

1.08 Parking Facilities

Parking facilities for the Contractor's and Contractor's subcontractors' personnel shall be the Contractor's responsibility. The storage and work facilities provided by the Owner will not be used for parking by the Contractor's or subcontractor's personnel.

1.09 Temporary Heating

A. General

1. All heating required during the progress of the work, prior to the installation of the permanent heating system, shall be classified “temporary heat”.

2. Prior to the installation of permanent heating equipment, furnish approved heaters and fuel as required.

3. Keep equipment and surroundings in clean, safe condition.

4. When the permanent heating equipment has been installed, it shall be put into operation to assure evenly distributed heat to all portions of buildings.

5. Pay all fuel bills for temporary heat.

B. Temperatures

1. Except as otherwise called for, a minimum temperature of 50 degrees F and a maximum temperature of 75 degrees F in the building shall be maintained during the working hours and above freezing at all other times.

2. See requirements of various other sections of these Specifications for minimum temperature to be maintained for the application of work under the various trades.

C. Millwork: Supply adequate heating and ventilation to dry out buildings before installation of finished millwork and trim is started.

END OF SECTION

Part 1 General

1.01 Security Program

A. The Contractor shall protect the work, including all field office trailers and their contents from theft, vandalism, and unauthorized entry.

B. The Contractor shall initiate a site security program at the time of mobilization onto the worksite, which provides adequate security for site stored and installed material.

C. The Contractor shall maintain the security program throughout the Contract duration.

D. The Contractor and subcontractors are wholly responsible for the security of their storage compound and laydown areas, and for all their plant, material, equipment and tools at all times.

E. The Contractor shall provide the Engineer with a list of 24 hour emergency phone numbers including chain of command.

F. The Contractor shall issue photo identification badges to all employees and subcontractors working on the Project and/or entering the Project site. The Contractor shall maintain and provide the Owner and Engineer an up to date data base and printed list of employees and subcontractors issued photo identification badges."

1.02 Entry Control

A. The Contractor shall restrict entry of unauthorized personnel and vehicles onto the Project site.

B. The Contractor shall allow entry only to authorized persons with proper identification.

C. The Contractor shall maintain an Employee Log and Visitor Log and make the log available to the Owner upon request. This log shall be submitted to the Engineer bi-weekly or as necessary.

D. The Contractor shall require all visitors to sign the Visitor Acknowledgment of the Program Site Rules/Visitor Log which includes a release form. Copies of these forms shall be submitted to the Engineer bi-weekly and maintained in the Contractor's security files on-site.

E. The Contractor shall require all employees to sign the Employee Acknowledgment of Project Site Rules Log included at the end of this Section. All employees, subcontractor employees and lower tier contractor employees will receive a new employee orientation. Signing the Employee Log by the employee is certifying that the orientation training has been received.

F. The Engineer has the right to refuse access to the site or request that a person or vehicle be removed from the site if found violating any of the Project safety, security conduct rules.

1.03 Barricades, Lights and Signals

A. The Contractor shall furnish and erect such barricades, fences, lights and danger signals and shall provide such other precautionary measures for the protection of persons or property and of the work as necessary. Barricades shall be painted in a color that will be visible at night. From sunset to sunrise, the Contractor shall furnish and maintain at least one light at each barricade and sufficient numbers of barricades shall be erected to keep vehicles from being driven on or into any work under construction.

B. The Contractor will be held responsible for all damage to the work due to failure of barricades, signs and lights and whenever evidence is found of such damage, the Contractor shall immediately remove the damaged portion and replace it at Contractor's cost and expense. The Contractor's responsibility for the maintenance of barricades, signs and lights shall not cease until the Project has been accepted by the Owner.

1.04 Restrictions

The Contractor shall not allow cameras on site or photographs taken except with approval of the Owner or the Engineer.

1.05 Contractor Safety/Health and Security Plan

A. Prior to the performance of any work the Contractor will prepare a contract specific Safety/Health and Security Plan signed by an officer of the Contractor's organization. Adequacy is the responsibility of the Contractor.

B. The Engineer will not review the Contractor's safety plan for the adequacy of the plan. The plan shall:

1. Identify the person(s) responsible for implementation and enforcement of Safety/Health and Security rules and regulations for this Project.

2. Generally address safe work procedures for the activities within the Contractor's scope of work.

3. Included a new employee orientation program which addresses job and site specific rules, regulations and hazards.

4. Include the Contractor's Drug Free Work Place Policy including substance abuse prevention and testing program.

5. Include provisions to protect all of the Contractor's employees, other persons and organizations who may be affected by the work from injury, damage or loss.

6. Comply with current Fed/OSHA, Safety/Health and Security Plan, facility safety program (when applicable), and locally accepted safety codes, regulations and practices.

7. Include a site specific emergency action and evacuation plan.

8. Include Hazard Communication/Right To Know Program.

9. Include security procedures for the Contractor's work, tools, and equipment.

10. Include the capability of providing the Engineer with documentation to show compliance with their plan, plus accidents and investigation reports.

11. Address any other contract specific requirement.

C. Provide a Job Safety Analysis (JSA) for the scope of work, prior to the start of work.

D. Review of the Contractor's Safety Plan by the Engineer shall not impose any duty or responsibility upon the Engineer for the Contractor's performance of the work in a safe manner.

E. The Contractor shall be fully responsible for the safety and health of its employees, its subcontractors and lower tier contractors during performance of its work.

F. The Contractor shall provide the Engineer with all safety reports, training records, competent person list, and accident reports prepared in compliance with Fed/OSHA and the Project Safety/Health and Security Plan.

VISITOR ACKNOWLEDGMENT OF THE PROJECT SITE RULES

By Signing this Visitor's Log, I acknowledge the I understand and agree to abide by the project rules outlined below.

In consideration of my receipt of a visitor's pass as issued by the Engineer directly or indirectly for the Atlanta - Fulton County Water Resource Commission, I waive on behalf of myself, my heirs, employer, legal representatives and assigns and hereby release and discharge the Owner, Engineer, Designer, and their subcontractors and consultants and each of their directors, officers, employees, representatives and agents from any and all claims, actions, causes of action or any charge of any kind whatsoever which may arise or could arise in the future as a result of my being present at the facility including injury, death or property damage whether or not caused by the fault or negligence of any of the parties released hereunder.

I further acknowledge that I have been briefed on specific hazards, hazardous substances that are on site and the site emergency action procedure.

PROHIBITED ACTIVITIES

- Unauthorized removal or theft of OWNER's property
- Violation of safety or security rules or procedures
- Possession of firearms or lethal weapons on jobsite
- Acts of sabotage
- Destruction or defacing OWNER's property
- Failure to use sanitary facilities
- Failure to report accidents or job related injuries
- Being under the apparent influence of drugs, alcohol or other intoxicants or in possession of drugs, alcohol or other intoxicants on the property
- Wearing shorts or tennis shoes on the jobsite
- Failure to wear a hardhat/safety glasses.
- Gambling at any time on the project
- Fighting, threatening behavior, or engaging in horseplay on the project
- Smoking in unauthorized areas on the project
- Open fire cooking or making unauthorized fires on project property
- Selling items or raffles without authorization
- Use of unauthorized cameras on the project
- Use of radio or television in the construction area
- Failure to park personal vehicle in authorized parking area
- Failure to wear designated identification [Site Specific]
- Failure to use designated gates

I have read, understand and agree to abide by the PROJECT SITE RULES. Furthermore, I understand failure to abide by these rules is grounds for being denied access to the project site. I have received a personal copy for my use and reference.

VISITOR LOG

THE SIGNING OF THIS LOG ACKNOWLEDGES I HAVE READ AND UNDERSTAND AND AGREE TO ABIDE BE THE PROJECT RULES OUTLINE ABOVE. THIS IS NOT A VEHICLE ACCESS PERMIT.

VISITOR'S NAME PRINT	SIGNATURE	COMPANY VISITED	DATE		OUT

EMPLOYEE ACKNOWLEDGMENT OF THE PROJECT SITE RULES

By Signing this Employee Log, I acknowledge that I understand and agree to abide by the project rules outlined below.

PROHIBITED ACTIVITIES

- Unauthorized removal or theft of OWNER's property
- Violation of safety or security rules or procedures
- Possession of firearms or lethal weapons on jobsite
- Acts of sabotage
- Destruction or defacing OWNER's property
- Failure to use sanitary facilities
- Failure to report accidents or job related injuries
- Under the apparent influence of drugs, alcohol or other intoxicants or in possession of drugs, alcohol or other intoxicants on the property
- Wearing shorts or tennis shoes on the jobsite
- Failure to wear a hardhat
- Gambling at any time on the project
- Fighting, threatening behavior, or engaging in horseplay on the project
- Smoking in unauthorized areas on the project
- Open fire cooking or making unauthorized fires on project property
- Selling items or raffles without authorization
- Use of unauthorized cameras on the project
- Use of radio or television in the construction area
- Failure to park personal vehicle in authorized parking area
- Failure to wear designated identification
- Failure to use designated gates

I have read, understand and agree to abide by the PROJECT SITE RULES. Furthermore, I understand failure to abide by these rules is grounds for being denied access to the project site. I have received a personal copy for my use and reference.

EMPLOYEE LOG

BY SIGNING THIS LOG ACKNOWLEDGMENT I HAVE READ AND UNDERSTAND AND AGREE TO ABIDE BY THE PROJECT RULES OUTLINED ABOVE AND ALL STATE, FEDERAL, LOCAL OR ANY OTHER CONTRACT OBLIGATIONS THAT MAY APPLY. I FURTHER ACKNOWLEDGE THAT I HAVE BEEN ORIENTATED AS TO THE SITE SPECIFIC HAZARDS, ANY HAZARDOUS SUBSTANCES I MAY BE EXPOSED TO WHILE ON THE SITE AND THE SITE/COMPANY EMERGENCY ACTION PROCEDURES, BY A REPRESENTATIVE OF THE COMPANY.

EMPLOYEES (PRINT)	SIGNATURE	COMPANY NAME	DATE
Signature of Company Representative		Date Signed	

END OF SECTION

Part 1 General

1.01 Scope

Limit blowing dust caused by construction operations by applying water or employing other appropriate means or methods to maintain dust control, subject to the approval of the Owner. As a minimum, this may require the use of a water wagon twice a day to suppress dusty conditions.

1.02 Protection of Adjacent Property

A. The Bidders shall visit the site and note the buildings, landscaping, roads, parking areas and other facilities near the work site that may be damaged by their operations. The Contractor shall make adequate provision to fully protect the surrounding area and will be held fully responsible for all damages resulting from Contractor's operations.

B. Protect all existing facilities (indoors or out) from damage by dust, fumes, spray or spills (indoors or out). Protect motors, bearings, electrical gear, instrumentation and building or other surfaces from dirt, dust, welding fumes, paint spray, spills or droppings causing wear, corrosion, malfunction, failure or defacement by enclosure, sprinkling or other dust palliatives, masking and covering, exhausting or containment.

END OF SECTION

Part 1 General

1.01 Scope

A. The work under this Section shall include the furnishing of a minimum of one painted sign of not less than 32 square feet in area, with painted graphic content that includes:

1. Project title
2. Owner's name
3. Names of governmental units participating in the Project
4. Engineer's name
5. Names and titles of other parties to be directed by the Engineer

1.02 Design

The Contractor shall provide a scale drawing showing the graphic design, style of lettering and colors to the Engineer for approval.

Part 2 Products

2.01 Materials

A. Structure and Framing: May be new or used, wood or metal, in sound condition structurally adequate to work and suitable for specified finish.

B. Sign Surfaces: Exterior soft wood plywood with medium density overlay, standard large sizes to minimize joints.

C. Thickness: As required by standards to span framing members, to provide even, smooth surface without waves or buckles.

D. Rough Hardware: Galvanized.

E. Paint: Exterior quality, as specified in Section 09900 of these Specifications.

Part 3 Execution

3.01 Erection

Erect the sign on the site in a high visibility location, adjacent to the Project as approved by the Engineer.

3.02 Maintenance

Contractor shall maintain the Project Sign in good condition during the Contract period.

END OF SECTION

Part 1 General

1.01 Scope

A. The work under this Section shall include the providing of separate field offices for the Contractor and maintaining existing trailer facilities provided previously for the Engineer. The work shall include providing and/or maintaining the field offices, located on the Project site, site preparation, utilities, removal of the office(s) and restoration of the area.

B. Furnish, install and maintain storage and work sheds needed for construction.

1.02 Requirements

A. General

1. The materials, equipment, and furnishings provided under this Section may be new or used (except as indicated otherwise), but must be serviceable, adequate for the required purpose, and must not violate applicable codes or regulations.

2. The Contractor shall make all provisions and pay all costs for utilities, site work and removal for field offices and facilities.

B. Construction

1. Structurally sound, weather tight, with floors raised above ground.

2. Temperature Transmission Resistance: Compatible with occupancy and storage requirements.

3. At the Contractor's option, portable or mobile buildings may be used.

a. Mobile trailers shall be Class “A”, new and modified for office use.

b. Do not use mobile trailers for living quarters.

1.03 Submittals

Submit to the Engineer for approval a site plan for Contactor offices showing the locations of field offices, parking, storage spaces and storage trailers. The Engineers’ offices have been sited, not requiring planning or placing of field offices.

Part 2 Products

2.01 Engineer's Field Office

A. The Engineer’s Field Office (EFO) has been fully installed and does not require construction work. The Contractor shall maintain EFO and remain on the site until the

Project is completed or final payment is made. The hot and cold water supply requires repair to distribute potable water to the half-bath and kitchenette; PVC piping is acceptable as typical residential service, for a fully serviceable installation.

B. The Engineer's Field Office shall be separate from the Contractor's.

2.02 Engineer Field Office Interior Furnishings

A. Provide new, delivered, and set-up the following items for the Engineer's field office: (All maintenance services, consumable supplies, furnishings, etc., shall be provided for the full duration of the Project.)

1. One Canon Image RUNNER 2010F photocopier (or latest Canon IR equivalent) provided by others. Provide photocopier maintenance service, paper, toner and all copier supplies.

2. Facsimile Machine: Sharp Model SHA UXP200 provided by others. Provide maintenance service, paper, toner and supplies.

3. One desk-type phone provided by others shall be provided in each office and open area. At minimum, the desk-type phones shall have as features: speed dial, hold, mute, speaker-phone and interoffice intercom.

4. One single-pot automatic coffee maker provided by others. Provide coffee and coffee supplies.

5. One desk, per office, provided by others.

6. One desk chair, per desk, provided by others.

7. Eight vinyl padded folding chairs equal to FDL #198151 provided by others.

8. Two 30" x 72" plastic folding tables equal to Globe #PTC3072GG01 provided by others.

9. Four four-drawer legal file cabinet equal to HON 370 series #D374CQ provided by others.

10. A minimum of 20 linear feet of wall mounted office shelves vertically spaced 12" apart provided by others.

11. Three five-gallon wastebaskets.

12. One 12 cubic foot refrigerator with Thrudoor automatic ice dispenser provided by others.

13. One 0.8 cubic foot microwave oven provided by others.

14. One weather station equal to Davis EZ-Mount Weather Monitor II, including Weatherlink software for MS Windows, mounting hardware, cable, and all accessories required to provide a fully operational station. Install the weather station's pre-assembled sensor array outside at a location suitable to the Engineer. Install Weather Monitor II Console inside the Engineer's field office, at a location suitable to the Engineer. Ensure full operation, troubleshoot, and maintain the weather station as needed during the duration of the Project.

15. Provide an exterior security floodlight in the area of the Engineer's field office provided by others.

16. During other than normal working hours, the Contractor shall provide security measures and area protection equivalent to that used by Contractor and Contractor's job site shop and office facilities. If the Contractor uses an electronic security system, Contractor shall provide a totally separate electronic security system for the Engineer's field office.

B. Services and supplies to be supplied for the duration of the Project (in addition to utility services):

1. Repair and clean the offices, parking areas and access routes.

2. Provide complete janitorial services and supplies, including but not limited to toilet paper, soap, and paper towels. Cleaning shall be done on a daily basis during other than normal working hours.

3. Provide monthly computer services by Acworth Network Services, 7223 Galts Ferry Rd, Acworth, Georgia 30102-1122

2.03 Contractor's Field Office and Facilities

A. The Contractor shall maintain a local office with a telephone and fax in the general area of the work, and will be required to have a responsible representative on call at all times.

B. Size: As required for general use and to provide adequate space for Project Meetings.

C. Lighting and Temperature Control: The office building shall be adequately wired for electricity in accordance with applicable codes to handle the total lighting, air conditioning, equipment and other loads. Lighting fixtures, in adequate numbers, shall be installed to give an illumination of 150 foot candles average and minimum glare. Fluorescent lamp fixtures with minimum 45 degrees shielding will be required.

D. Telephone: As required for Contractor's operations.

E. Racks and files for Project Record Documents.

F. Other Furnishings: Contractor's option.

G. One 10-inch outdoor-type thermometer.

H. The Contractor shall possess and maintain a scanner in its field office. The purpose of the scanner is to provide a means to create electronic versions of documents, sketches, data, and other information, particularly submittals. See Section 01340 for submittal requirements.

2.04 Utilities

A. General: Provide and pay all costs for all telephone, internet, network, water, sewer, and electricity required for the field office for the duration of the Project. Upon completion of the work, remove all temporary utilities and telephone equipment.

B. Temporary Water and Sewer: Furnish and install all necessary temporary piping and appurtenances for water and sewer service required for field offices.

C. Temporary Electricity: The Contractor shall furnish and install all necessary electrical service for field offices.

D. Telephone Service

1. The Contractor shall provide telephone service to Contractor's office and separate service to the Engineer’s field office. All portions of the communication system shall be maintained in good working condition. At least one phone jack shall be provided in each office and open area.

2. The telephone system in the Engineer’s field office shall be, in addition to Internet connection solution, a touch-tone, local to the site area code, four-line phone system with a separate dedicated line for facsimile machine.

3. All costs for the installation costs of lines, line extensions, service charges and recurring service charges for telephone services, including long distance phone calls, shall be paid by the Contractor at no additional cost to the Owner.

E. Internet Service

1. Internet Service Provider (ISP): The Contractor shall make arrangements and pay for dedicated minimum 512 kbps Internet service to the Engineer’s field office for the full duration of the Project.

2. Acceptable solutions include DSL, or cable. If neither DSL nor cable is available, satellite can be utilized. If satellite internet is utilized, it shall be provided through VIASAT Linkstar Systems (1-678-924-2713). Regardless of the service provided, the Contractor shall pay all cost for, shall provide and coordinate the installation of all hardware and software necessary to provide a complete Internet access, at the required speed, and local area network, for the full duration of the Project. The Contractor shall provide and pay all cost

associated with a single source vendor to furnish unit responsibility for the entire system to include, but not limited to hardware, software, ISP service, and local area network. Maintenance and support services shall be provided 24/7 for the full duration of the Project.

3. ISP services shall provide a minimum of four internet mailboxes.

F. Network

1. Contractor shall provide a complete network system including but not limited to the following:

a. Linksys Cable/DSL router address translator, model #BEFSR41.

b. Category 5 24-port patch panel.

c. Category 5 24-port Ethernet hub.

d. Category 5 network connection in each office and work area.

e. Category 5 wiring to all connections and taken back to central location and terminated at the Cat-5 patch panel, as listed above.

2. Contractor shall include in their bid a cost of $10,000.00 to provide and coordinate the installation of the hardware and software for the internet and network with the approved installer including maintenance throughout the Project. Installation and maintenance of the network will be performed by a firm selected by the Engineer.

2.05 Parking Facilities

A. Parking facilities for the Contractor's field office shall be the Contractor's responsibility. The storage and work facilities provided by the Owner will not be used

B. The Contractor shall provide ample parking, graveled or paved, adjacent to the Engineer's field office. Adequate parking space shall be provided for at least one car per 100 square feet of the Engineer’s field office, not including Contractor’s vehicles, at Engineer’s field office.

2.06 Use of Permanent Facilities

Permanent facilities shall not be used for field offices or for storage.

Part 3 Execution

3.01 Preparation

Fill and grade sites for temporary structures to provide surface drainage.

3.02 Installation

A. Construct temporary field offices and storage facilities on proper foundations and provide connections for utility services.

1. Secure portable or mobile buildings when used.

2. Provide steps and landings at entrance doors.

3. Provide tie-downs for 100 mile per hour gusts and winds.

B. Locate construction office facilities at locations within the Project approved by the Engineer.

3.03 Maintenance and Cleaning

Provide periodic maintenance and cleaning for temporary structures, furnishings, equipment and services.

3.04 Removal

A. Remove temporary field offices and utilities at Project Completion or as directed by the Engineer.

B. Remove foundations and debris; grade site to required elevations and clean areas. At a minimum, unless specified elsewhere, restore area to the condition it was in at the beginning of the Project and regrass as required.

C. Furnishings furnished for the Engineer's field office are property of the Owner. Remove and relocate furnishings to a location identified by the Owner, as directed by the Engineer.

END OF SECTION

Part 1 General

1.01 Scope

A. The Contractor shall provide transportation of all equipment, materials and products furnished under these Contract Documents to the work site. In addition, the Contractor shall provide preparation for shipment, loading, unloading, handling and preparation for installation and all other work and incidental items necessary or convenient to the Contractor for the satisfactory prosecution and completion of the work.

B. All equipment, materials and products damaged during transportation or handling shall be repaired or replaced by the Contractor at no additional cost to the Owner prior to being incorporated into the work.

1.02 Transportation

A. All equipment shall be suitably boxed, crated or otherwise protected during transportation.

B. Where equipment will be installed using existing cranes or hoisting equipment, the Contractor shall ensure that the weights of the assembled sections do not exceed the capacity of the cranes or hoisting equipment.

C. Small items and appurtenances such as gauges, valves, switches, instruments and probes which could be damaged during shipment shall be removed from the equipment prior to shipment, packaged and shipped separately. All openings shall be plugged or sealed to prevent the entrance of water or dirt.

1.03 Handling

A. All equipment, materials and products shall be carefully handled to prevent damage or excessive deflections during unloading or transportation.

B. Lifting and handling drawings and instructions furnished by the manufacturer or supplier shall be strictly followed. Eyebolts or lifting lugs furnished on the equipment shall be used in handling the equipment. Shafts and operating mechanisms shall not be used as lifting points. Spreader bars or lifting beams shall be used when the distance between lifting points exceeds that permitted by standard industry practice.

C. Under no circumstances shall equipment or products such as pipe, structural steel, castings, reinforcement, lumber, piles, poles, etc., be thrown or rolled off of trucks onto the ground.

D. Slings and chains shall be padded as required to prevent damage to protective coatings and finishes.

END OF SECTION

SEE GENERAL CONDITITIONS ARTICLE GC-32.

SEE SPECIAL CONDITITIONS ARTICLE SC-28.

END OF SECTION

Part 1 General

1.01 Scope

These general equipment stipulations apply to all equipment and piping. They supplement the detailed equipment Specifications, but in case of conflict, the detailed equipment Specifications shall govern.

1.02 Coordination

The Contractor shall assume full responsibility for the coordination of the installation of all equipment, materials and products furnished under these Contract Documents. The Contractor shall be completely responsible for verification that all structures, piping and equipment components furnished by the Contractor and/or subcontractors and suppliers are compatible. The Contractor shall start-up each equipment system and shall make all necessary alterations. All such alterations shall be made at the Contractor's expense.

1.03 Unit Responsibility

Equipment manufacturers assigned unit responsibility for systems comprised of several components shall be responsible for furnishing a complete system in accordance with the requirements of these Specifications. The manufacturer shall be responsible for all coordination between component manufacturers and shall provide all submittals, installation and start-up services and certifications on the system as a unit.

1.04 Adaptation and Location of Equipment

A. No responsibility for alteration of a planned structure to accommodate other types of equipment will be assumed by the Owner. Equipment which requires alteration of the structures will be considered only if the Contractor assumes all responsibility for making and coordinating all necessary alterations. All such alterations shall be made at the Contractor's expense.

B. The Contractor shall install the work in such manner that the equipment, piping, vents, conduit, panels, ductwork and appurtenances be as neatly installed with adequate space for maintenance and passage of personnel.

1.05 Equipment Warranty

The Contractor shall warrant all equipment against faulty or inadequate design, improper assembly or erection, defective materials, breakage or other failure. The warranty period shall be defined in Section 01740 of these Specifications.

1.06 Workmanship and Materials

A. All equipment shall be designed, fabricated and assembled in accordance with the most modern engineering and shop practice. Individual parts shall be manufactured to

standard sizes and gauges so that repair parts, furnished at any time, can be installed in the field. Like parts of duplicate units shall be interchangeable. Equipment shall be new and shall not have been in service at any time prior to delivery, except as required by tests.

B. Materials shall be suitable for service conditions. Iron castings shall be tough, close grained, gray iron free from blowholes, flaws or excessive shrinkage and shall conform to ASTM A 48, Class 30 minimum. Plugging of defective castings shall not be permitted. Castings shall be annealed to remove internal stresses prior to machining and shall have the mark number and heat number cast on them.

C. Except where otherwise specified, structural and miscellaneous fabricated steel used in items of equipment shall conform to the Standards of the American Institute of Steel Construction. All structural members shall be considered as subject to shock or vibratory loads.

D. All replaceable or expendable elements such as filters, screens, drive belts, fuses and lamps shall be easily accessible and replaceable without need of dismantling equipment or piping. All such items shall be of a standard type that is readily available from multiple suppliers.

E. Threaded openings for drains or vents in pump volutes, compressor or fan scrolls, air receivers, and heat exchangers which are plugged during normal operation shall be provided with stainless steel plugs.

F. All equipment delivered to the Project site shall include detailed installation instructions and a parts list.

1.07 Equipment Specifications

The use of singular or plural terminology in the Specifications is not intended to define the number of units required to fulfill Contract requirements. Bidders must consult the Drawings and Specifications to determine how many units of a particular piece of equipment are required. This does not relieve the Contractor of the responsibility to provide all equipment specified when multiple units are specifically required in the Specifications.

1.08 Seal Water Requirements

Where seal water is provided for flushing of mechanical shaft sleeves or sealing of shaft seal packing, provide equipment with drip pans fitted with drains to contain the leakage and convey it to the nearest suitable floor drain. Route drain piping to minimize obstructions to the movement of personnel.

1.09 Operating Fluids and Gases

All operating fluids and gases recommended by the manufacturer and required for operation of the equipment shall be provided in sufficient quantity by the Contractor to fill all equipment and to replace all fluids and gases consumed during testing and start-up.

1.10 Lubrication and Lubrication Fittings

A. Equipment shall be adequately lubricated by systems which require attention no more frequently than weekly during continuous operation. Lubrication systems shall not require attention during start-up or shutdown and shall not waste lubricants.

B. Lubricants of the type recommended by the equipment manufacturer shall be provided in sufficient quantity by the Contractor to fill all lubricant reservoirs and to replace all lubricants consumed during testing, start-up and initial operation. The Contractor shall provide sufficient quantities of manufacturer-approved lubricants to lubricate all equipment for one year of normal service before final acceptance of the equipment will be made by the Owner.

C. Where special run-in oil or storage lubricants are used, they shall be flushed out and replaced with the required service lubricant by the Contractor.

D. Tag each piece of equipment with a cloth tag showing proper type lubricant, period between lubrications, date of lubrication and worker's initials. Have space for 10 lubrication notations.

E. Except for rotating shaft couplings, all lubrication fittings shall be brought to the outside of all equipment so that they are readily accessible from the outside without the necessity of removing covers, plates, housings or guards. Fittings shall be accessible from safe, permanent platforms or walk areas. Fittings shall be of the bull-neck, check type for use with a portable high pressure grease gun. Connection from a remote fitting to the point of use shall be with minimum 3/16-inch stainless steel tubing, securely mounted parallel to equipment lines and protected where exposed to damage.

1.11 Safety Guards

All belt or chain drives, fan blades, couplings and other moving or rotating parts shall be covered on all sides by a safety guard. Safety guards shall be fabricated from 16 USS gauge or heavier galvanized or aluminum-clad sheet steel or 1/2-inch mesh galvanized expanded metal. Expanded metal safety guards shall be banded to eliminate sharp edges. Each guard shall be designed for easy installation and removal. All necessary supports and accessories shall be provided for each guard. Supports and accessories, including bolts, shall be galvanized. All safety guards in outdoor locations shall be designed to prevent the entrance of rain and dripping water. All safety guards shall comply with OSHA General Industry Standards, Part 1910, Subpart O, Machinery and Machine Guarding. Provide tachometer access on shaft ends.

1.12 Equipment Bases

A. Where shown on the Drawings, equipment shall be installed on a raised, reinforced concrete base. The base shall be a minimum of 4-inches in height and shall extend beyond the equipment baseplate approximately 2-inches on all sides.

B. The Engineer shall be consulted concerning electrical conduit locations prior to pouring the concrete base.

C. Unless otherwise specified, a cast iron or welded steel baseplate shall be provided for each pump, compressor and any other item of equipment which is to be installed on a concrete base. Each unit and drive assembly shall be supported on a single baseplate of neat design. Baseplates shall have pads for anchoring all components and adequate grout holes. Baseplates for pumps shall have a raised lip all around and a threaded drain connection. Baseplates shall be anchored to the concrete base with suitable anchor bolts and the space beneath filled with epoxy or non-shrink grout as specified in the grouting section.

D. On direct coupled equipment, motor and driven equipment shall be doweled to a common base with a minimum of two dowels each.

1.13 Alignment of Motors and Equipment

A. In every case where a drive motor is connected to a driven piece of equipment by a flexible coupling, the coupling halves shall be disconnected and the alignment between the motor and the equipment checked and corrected. Machinery shall first be properly aligned and leveled by means of steel wedges and shims or jacking screws near anchor bolts. Anchor bolts shall be tightened against the shims on wedges or jacking screws and the equipment shall again be checked for level and alignment before placing grout. Wedges shall not be placed between machined surfaces.

B. In general, checking and correcting the alignment shall follow the procedures published in the manufacturer's Operation and Maintenance Manual. In addition, pumps shall be set up in accordance with the Standards of the Hydraulic Institute, Instructions for Installation, Operation, and Maintenance of Centrifugal Pumps, unless manufacturer's direction is contradictory. Equipment shall be properly leveled and brought into angular and parallel alignment.

C. Equipment shall be installed in such a way that no strain is transmitted to the equipment by piping systems or adjacent equipment.

1.14 Grouting

A special epoxy, non-shrink, or sand-cement grout shall be used in the placement of all pump, motor and equipment baseplates or bedplates, column baseplates, other miscellaneous baseplates and other grouting applications as shown on the Drawings.

1.15 Welding and Brazing

A. All welds shall be sound and free from embedded scale and slag. All butt welds shall be continuous, and where exposed to view, shall be ground smooth. All continuous welds shall be gas and liquid-tight. Welds in piping shall have full penetration and shall be smooth on the inside of the pipe. Intermittent welds shall have an effective length of at least 2-inches and shall be spaced not more than 6-inches apart.

B. All welding of steel and aluminum, including materials, welding techniques, general safety practices, appearance and quality of welds, and methods of correcting defective work, shall conform to the latest requirements of AWS Specifications. Structural steel welding shall conform to the requirements of the AWS Structural Welding Code. The general recommendations and requirements of the AWS Structural Welding Code shall also apply to welded aluminum structures. The welding process and welding operators shall meet qualification tests and welding performance tests in accordance with the latest provisions of ASME Boiler and Pressure Vessel Code, Section IX, Welding and Brazing Qualifications. Welding process and qualification procedures for welding of pipe shall conform to the latest requirements of ANSI B31.1, Section 327, Welding, and Section 328, Brazing and Soldering. All welding qualification tests shall be witnessed by the Engineer, except as provided herein. All costs associated with the qualification or testing of welders and welding operators shall be borne by the Contractor.

C. Welding of stainless steels shall be performed by the MIG or TIG process, in accordance with ASME and AWS recommendations. After welding is completed, the welds shall be ground smooth, where required, and all welds shall be pickled and passivated such that the weld will be no less corrosion resistant than the base metal welded.

D. Reports certifying that the welding procedures, welders and welding operators that the Contractor intends to use meet the requirements specified above. These reports shall be submitted to the Engineer prior to beginning the work. In the case of welder qualifications for shop welding and for carbon steel field welding, welders presenting certified qualification papers validated within the preceding 6-month period will not be required to take the qualification tests. In the case of field welding of stainless steel or aluminum, all welders shall be required to take the qualification tests regardless of past experience or availability of certified qualification papers.

E. Field welding practices shall conform to OSHA construction standards, Part 1926, Subpart J, Welding and Cutting. Shop welding practices shall conform to OSHA General Industry Standards, Part 1910, Subpart Q, Welding, Cutting, and Brazing.

E. Welding electrodes for structural steel shall conform to the standard recommendations of the AISC. Welding electrodes for stainless steel shall conform to applicable AWS Specifications and shall be as recommended by “Welded Austenitic Chromium-Nickel Stainless Steels, Techniques and Properties”, published by the International Nickel Company, New York, New York. Welding electrodes for aluminum shall conform to applicable AWS Specifications.

F. Each welder and welding operator must identify all welds with welder's assigned symbol.

G. Welders performing unsatisfactory work shall be removed from the welding process.

H. The Owner may inspect any weld by radiographic or other means. Welds not in accordance with the requirements specified herein shall be repaired or replaced at the Contractor's expense. Excessive porosity, nonmetallic inclusions, lack of fusion, incomplete penetration and cracking shall constitute grounds for rejection of welds.

1.16 Erection and Setting

A. In the erection and setting of all fabricated equipment, the Contractor shall exercise care to ensure that each item of equipment is adequately supported so as not to bend or distort under its own weight until adequate foundation support and anchorage are provided. Where lifting lugs, angles or clips are provided on equipment, they shall be used in erecting and setting the equipment. Erection and setting of equipment and structural steel shall conform to the requirements of OSHA Construction Standards, Part 1926, Subpart R, Steel Erection, Subpart H, Material Handling, Storage, Use, and Disposal, and Subpart N, Cranes, Derricks, Hoists, and Conveyors. Erection of structural steel shall conform to the latest requirements of the AISC Specification for the Design, Fabrication, and Erection of Structural Steel for Buildings.

B. During placement and prior to any grouting or connection of adjacent piping, the equipment shall be leveled and aligned true to level, plumb, alignment and grade with all parts bearing or fitting the structure or equipment accurately and securely. It shall not be permitted to cock out of alignment, nor shall the Contractor redrill, reshape or force fit any fabricated items. Connections of process piping to mechanical equipment nozzles/fittings shall be brought into alignment, one to the other. When joints are made up, there shall be no force exerted on the equipment connection.

C. The Contractor shall take all measurements necessary to properly fit Contractor's work in the field, and Contractor shall be governed by and responsible for these measurements and the proper working out of all details. The Contractor shall be responsible for the correct fitting of all work in the field and the accurate placement of all anchor bolts installed by Contractor.

D. The Contractor shall bring all parts to be erected or assembled into close contact. Before assembly, all surfaces to be in contact with each other shall be thoroughly cleaned. Drift pins may be used only for bringing members into position, never to enlarge or distort holes. Torching or burning of holes or cutting of fabricated items to correct misalignment or shop errors shall not be permitted. Enlargement of holes necessary to make field connections shall be done only with the Engineer's approval by reaming with twist drills and in a manner acceptable to Engineer.

E. All equipment shall be furnished with suitable eyebolt lifting lugs or lifting angles to facilitate handling.

F. All flanged piping connections shall be “Two-Holed” such that the two upper-most flange bolt holes are horizontal.

1.17 Special Tools and Accessories

Equipment requiring periodic repair and adjustment shall be furnished complete with all special tools, instruments and accessories required for proper maintenance. Special tools and accessories shall include those tools and accessories not normally available in an industrial hardware or mill supply house. Equipment requiring special devices for lifting or handling shall be furnished complete with those devices.

1.18 Galvanizing

A. All galvanizing shall be done by the hot-dip process after fabrication in conformity with requirements of ASTM A 123, Grade 100; ASTM A 153, ASTM A 384 and ASTM A 385. Articles to be galvanized shall be pickled before galvanizing. Articles to be painted shall not be quenched.

B. Where galvanized bolts are specified or required by the Drawings, zinc plated bolts will be acceptable provided zinc plating conforms to ASTM B 633, Type II.

C. Areas of galvanizing damaged at the factory by welding or burning or otherwise damaged shall be thoroughly stripped and cleaned and recoated with zinc to the required thickness by the hot dip process. Areas of galvanizing damaged in the field during transportation, handling or installation shall be stripped, cleaned, and recoated with zinc to the required thickness in accordance with ASTM A 780, Annex A3.

D. Galvanized articles shall be free from uncoated spots, blisters, flux, black spots, dross, projections and other defects not consistent with acceptable galvanizing practice.

E. Zinc and cadmium plating shall be subject to visual examination to determine uniformity of coating. The Engineer may require that the coating uniformity be tested in accordance with ASTM A 239 or ASTM E 376.

1.19 Vibration Testing

A. Unless specified otherwise in the Specifications, each pump or blower having a rated power of 50 HP, or greater, shall be tested in the field for acceptable vibration levels. Vibration testing shall be performed by an experienced, factory-trained and authorized vibration analysis expert (not a sales representative) retained by the Contractor for this work. Each unit shall be tested separately without duplicate equipment running. All field testing shall be done in the presence of the Engineer. The Engineer shall be furnished with four certified copies of vibration test data for each test performed.

B. Where specified in the Specifications, equipment which is assembled and tested on the manufacturer's floor shall also be checked triaxially for vibration by the manufacturer. The results of these tests, along with location of vibration check points, shall be submitted to the Engineer. All readings shall be made on an X-Y recorder with appropriate scales indicated and an explanation thereon of any recordings exceeding specified limits. The field tests shall include substantiation of the manufacturer's test data.

C. For systems with variable speed drives, tests shall be conducted at various speeds between maximum and minimum. For systems with two-speed drives, tests shall be conducted at both speeds. For systems with constant-speed drives, tests shall be conducted under various loading conditions as determined by the Engineer.

D. Rotating equipment shall be tested for vibration in the field after installation by the following method. Equipment, complete with drive systems, in place at the job site, shall not vibrate more than the values allowed herein, unless otherwise specified in the detailed equipment specifications. All field tests shall be running tests with the

equipment operating on the product for which it is intended or a substitute acceptable to the Engineer. The term displacement, as used herein, shall mean total peak-to-peak movement of vibrating equipment, in mils; velocity shall mean the peak velocity or speed of the vibrating equipment, in inches per second; acceleration shall mean the maximum acceleration which occurs during the vibration cycle, measured in Gs. Displacement and velocity shall be measured by a meter equal to IRD Balancing Vibration Analyzer Model 258, or Bently-Nevada Model TK-8. Acceleration shall be measured by suitable equipment equal to IRD Mechanalysis, Bently-Nevada, subject to approval of the Engineer. Frequency of vibration, in cycles per minute (cpm), shall be determined when vibration exceeds specified levels or as otherwise necessary. Vibration shall be measured on the bearing housing, unless other locations are deemed necessary by the vibration analysis expert and Engineer.

E. For all equipment tested, vibration shall be checked in the radial and axial directions. For pumps, vibration shall not exceed that permitted by the Hydraulic Institute.

F. Critical speeds of all rotating equipment shall meet the following:

1. For stiff shaft designs, the first critical speed of the rotating equipment shall be at least 25 percent above the maximum design operating speed.

2. For flexible shaft designs, critical speeds shall be at least 2 percent above or below normal design operating speeds.

G. The Contractor shall be responsible for unit and system assembly vibration testing and their results, which shall be within the specified limits. Copies of test results shall be submitted to the Engineer for review. Should the vibration field test results exceed shop test results or the limits specified herein, the Contractor shall correct the deficiencies within 30 days. After corrections have been completed, the vibration testing shall be rerun and the results resubmitted to the Engineer for review.

1.20 Hydraulic Systems

A. All pipes, tubes and hoses for hydraulic fluid shall be securely restrained against movement. All tubing and hoses shall be routed, shielded and supported such that rubbing or abrasion of the jacket shall not occur.

B. All hydraulic fluid reservoirs for hydraulic power packs shall be equipped with a low level shut-off mechanism which shall stop operation of the power pack when the level of fluid in the reservoir reaches a predetermined low level. Reservoirs shall have a sight glass or tube allowing visual inspection of level and lubricant appearance.

C. All hydraulic systems shall be equipped with an alarm to notify the operator of system malfunction.

1.21 Noise Criteria

A. Unless otherwise specified, noise levels for all operating equipment shall not exceed 90 dB at 5 feet from the equipment when measured on the A scale of a calibrated sound level meter at slow response.

B. Noise criteria shall be met without the use of special external barriers or enclosures.

1.22 Identification of Piping and Equipment

A. General: All equipment and piping specified to be painted shall be color coded as specified in Section 09900 of these Specifications.

B. Equipment: All major items of equipment shall have an identification nameplate and dataplate. Nameplates and dataplates shall be factory painted to resist corrosion in an atmosphere of sodium hypochlorite and dilute chlorine gas. The factory painting shall in no way restrict the legibility of the nameplates or dataplates.

1. Nameplates: The Contractor shall submit a suitable list of all items of major equipment to the Engineer, who will furnish the Contractor with an identification numbering system. The nameplates shall be of Type 304 stainless steel, No. 6 finish, and not less than No. 16 gauge with indented stamped lettering. Nameplates shall be attached to equipment bases in easily visible and accessible locations. Nameplates shall be fastened in a permanent manner, arranged not to damage the equipment, with not less than four stainless steel fasteners.

2. Dataplates: Each item of mechanical or storage equipment shall be provided with a stainless steel dataplate. Separate dataplates shall be provided for motors, engines and driven equipment. Dataplates for tanks shall be as specified in Section 13215 of these Specifications. Dataplates for mechanical equipment shall include the following minimum information:

   a. Name of equipment (from equipment specifications)

   b. Manufacturer

   c. Model designation

   d. Serial number

   e. Rated horsepower

   f. Service factor

   g. Electrical and insulation data

   h. Speed (rpm)

   i. Capacity and head (discharge pressure)

   j. Net weight

   k. Lettering shall be upper case, block style in size and spacing to suit the nameplate.

C. Valves: All valves shall be identified with a round stainless steel disc, approximately 1-1/2-inches in diameter and not less than No. 14 gauge, coated with a clear lacquer resistant to corrosion by chlorine gas. Discs shall be fastened to valves in a permanent manner; attachment by chain to handwheels or other operators shall not be acceptable. Discs shall be stamped using indented numerals and/or letters with a valve number corresponding to its identification number in the valve schedule to be included in the operation and maintenance manual.

D. All pushbutton stations, switches, motor controllers, transmitters and other control equipment shall have identification nameplates of the engraved, laminated plastic type affixed to or adjacent to the switch, pushbutton station, etc.

E. All manufacturer's nameplates, identification nameplates and ASME code plates located on areas of equipment to be insulated shall be removed and reattached on uninsulated areas in a manner acceptable to the Engineer.

1.23 Safety Signs

A. Permanent safety signs shall be furnished and installed on all mechanical and electrical equipment where a hazard may exist. Signs shall be made in accordance with current OSHA requirements and shall be suitable for exterior use. Mounting details shall be in accordance with manufacturer's recommendations; location in accordance with governing agency regulations. Fasteners shall be stainless steel.

B. Safety signs shall be approximately 10-inches high by 14-inches wide, colored yellow and black on minimum 0.080-inch aluminum stock.

C. Safety signs shall be furnished and will include, but not be limited to, the following:

1. The following sign shall be affixed to all equipment which may be started automatically from a remote location:

CAUTION
THIS EQUIPMENT MAY START AUTOMATICALLY BY REMOTE CONTROL

2. The following sign shall be affixed to all electrical equipment or instrument panels, as applicable:

CAUTION - SHOCK HAZARD
THIS EQUIPMENT IS POWERED BY MULTIPLE SOURCES
CONTACTS MAY BE ENERGIZED AFTER LOCAL POWER IS DISCONNECTED

3. The following sign shall be provided at all areas where oxygen or flammable materials are stored or used (colored red, white and black):

DANGER
NO SMOKING, MATCHES, OR OPEN FLAMES

4. The following sign shall be affixed to all entrance hatches or access manways on covered tanks and vessels:

CAUTION
OXYGEN DEFICIENT OR TOXIC CONDITIONS MAY EXIST
FOLLOW PRESCRIBED PROCEDURES BEFORE ENTRY

5. The following sign shall be provided at all compressor vents and equipment blowoffs:

CAUTION
LOUD BLOWDOWN MAY OCCUR WITHOUT WARNING

6. The following signs shall be applied to all chemical storage tanks, or tanks storing hazardous materials, including flammable, toxic, reactive and otherwise unstable materials or materials representing a personnel safety hazard. Comply with NFPA 704 signage requirements on the tank exterior at all 4 architectural elevations (N, S, E & W) as well as the filling station. The NFPA signs have the color coded diamonds and can be obtained with the actual chemical name and emergency response info.

END OF SECTION

Part 1 General

1.01 Scope

A. The work under this Section defines the minimum scope of services to be provided by the Contractor during installation, start-up, operating test period, and operator training using factory representatives of the manufacturers of the equipment provided.

B. Furnish all labor, materials, tools, equipment, and services for the cleaning up or preparation of all equipment which is required in conjunction with the instruction work to be performed for the Owner's personnel.

C. Perform additional instruction of the Owner's personnel for any and all items of work that are incomplete at the time initial instruction sessions are scheduled.

D. Although such work may not be explicitly specifically indicated elsewhere, furnish and install all supplementary or miscellaneous items, appurtenances and devices incidental to or necessary for a sound, secure and complete installation, and to provide instructions upon the functions of that installation.

E. Provide instruction for all equipment and systems for which operating and maintenance data is required.

F. Instruction sessions may be combined to some extent between several pieces of similar equipment within the same training session, but only if that combination is defined in the Contractor's instruction program submittal and approved by the Engineer.

G. One instruction session for each major type of equipment will be required. The Contractor shall anticipate that up to ten of the Owner's employees will participate in any particular instruction session, and shall be prepared to provide the required number of handouts, manuals, and tools for each session.

1.02 Qualification

A. Qualification of the manufacturer's representatives for installation, start-up, and operator training purposes shall be appropriate for the equipment being installed. Manufacturer's representatives shall be subject to the approval of the Engineer. Where equipment has significant process complexity, furnish the services of engineering personnel knowledgeable in the process involved and the function of the equipment.

B. References in various equipment sections of the terms "factory representative" or "field representative" shall mean an employee of the equipment manufacturer who is completely knowledgeable of the manufacturing, installation, operation and maintenance of the equipment. A sales representative does not qualify, unless it is documented that they have been specifically trained by the Manufacturer. Any field or factory representative not an active employee of the manufacturer must provide

documentation from the manufacturer stating that the individual, by name, has been formally trained in the installation, operation and maintenance of the equipment and is authorized to make the required certification to perform the required services.

1.03 Submittals

A. No later than ninety days prior to scheduled Substantial Completion of the Work, the Contractor shall submit a list of proposed instruction sessions for the entire Project. This list shall be organized by Specification Section and its contents will be subject to the approval of the Engineer and Owner.

B. After approval of the list of the proposed instruction sessions and no later than sixty days prior to the scheduled Substantial Completion of the Work, submit course outlines and training material for each of the approved instruction sessions. Outlines shall be organized by Specification Section, and their contents shall be subject to the approval of the Engineer.

C. After approval of the program content, the Contractor shall submit a proposed schedule for each of the approved instruction sessions which are to be organized by Specification Section, and the scheduled dates will be subject to the approval of the Engineer.

D. Submit a separate instruction request/report (form attached) for each system or type of equipment, subject to the Owner's approval of availability of personnel.

1. Submit request/report with preliminary information indicated, to the Engineer at least two weeks prior to first instruction period.

2. After each instruction session, submit three copies of the completed report to the Engineer.

1.04 Coordination

A. Do not begin instructions until component assembly or system has been tested as specified in Section 01655 and is in satisfactory operating condition.

B. Prior to instruction sessions, assemble instructional aids, tools, test equipment, and any necessary copies of Operations and Maintenance Manuals.

C. All instruction sessions shall be planned and scheduled such that the Owner's participants will utilize copies of the Project Operations and Maintenance Manuals which will have been previously provided. These copies are in addition to the quantities which have to be provided to the Owner under Section 01730. The use of draft copies of these manuals will be acceptable.

D. The Contractor shall schedule and coordinate the visits of factory representatives during installation, start-up and operator training in accordance with the requirements of Section 01655 of these Specifications.

E. The Contractor shall notify the Engineer 72 hours prior to any impending visit by factory representatives so that the Engineer can be present.

1.05 Installation, Start-Up, and Testing Services

The Contractor shall furnish the services of a factory representative to provide the Pre-Start-Up Maintenance, Installation, Inspection, Functional Testing, and Operational Testing in accordance with Section 01655 and the equipment sections of these Specifications.

1.06 Operator Training Services

A. Provide all instruction as required to ensure understanding of all operating and maintenance procedures by the Owner designated personnel.

B. Instruct Owner's personnel in operation and maintenance of equipment and systems. Provide all necessary instruction to satisfaction of the Owner.

C. Explain use of Operating and Maintenance Manuals.

D. Tour building areas involved and identify:

1. Maintenance and access points.

2. Control locations and control equipment.

E. Explain operating sequences:

1. Identify location and show operation of switches, valves, etc., used to start, stop, and adjust systems.

2. Explain use of flow diagrams, operating sequences, diagrams, etc.

3. Demonstrate operation through complete cycle(s) and full range of operation in all modes, including testing and adjusting relevant to operation

F. Explain use of control equipment, including temperature settings, switch modes, available adjustments, reading of gauges, and functions that must be serviced only by authorized factory representative.

G. Explain trouble shooting procedures:

1. Demonstrate commonly occurring problems.

2. Note procedures which must be performed by factory personnel.

H. Explain maintenance procedures and requirements:

1. Point out items requiring periodic maintenance.

2. Demonstrate typical preventive maintenance procedures and recommend typical maintenance intervals.

3. Demonstrate other commonly occurring maintenance procedures not part of preventive maintenance program.

4. Identify maintenance materials to be used.

I. Furnish all tools and/or test equipment required for proper instruction of the Owner's personnel. Tools and/or test equipment shall be distributed in "sets" with each two participants having a "set" to work with and retain upon completion of the instruction. Each participant shall sign for their tools at the start of the instruction session, and copies of the assignment documents shall be provided to the Construction Manager by the Contractor.

J. Thirty-day operating period after start-up: The manufacturers' representative for each piece of equipment shall return to the Project site 30 days after successful completion of the operating test to review the equipment performance, correct any equipment problems, and conduct follow-up operation and maintenance classes as required by the Owner. This follow-up trip is required in addition to the specified services of manufacturer's representative prior to and during equipment start-up. At this time, if there are no equipment problems, each manufacturer shall certify to the Owner in writing that his equipment is fully operational and capable of meeting operating requirements. If the certification is accepted by the Engineer and Owner, the warranty period for that piece of equipment shall be considered to have begun as of the start-up date. If the equipment is operating incorrectly, the factory representative will make no certification to the Owner until the problems are corrected and the equipment demonstrates a successful 30 days operating period. At the conclusion of that period, the warranty start date will be decided upon by the Owner.

K. Six month operating period after start-up: The manufacturer's representative for each piece of equipment shall return to the Project site six months after the successful completion of the operating test to review the equipment performance, correct any equipment problems, and conduct follow-up operation and maintenance classes as required by the Owner. This follow-up trip is required in addition to the specified services of manufacturer's representative prior to and during equipment start-up. At the time of this trip, if there are no equipment problems, each manufacturer shall certify to the Owner in writing that his equipment is fully operational and capable of meeting operating requirements. If the equipment is operating incorrectly, the service representative will make no certification to the Owner until the problems are corrected and the equipment demonstrates a successful 30-day operating period after problems are corrected.

1.07 Documentation

A. The Contractor shall provide for the services of an experienced professional audio-visual firm to record on tape all operators instruction(s), training sessions, and seminar(s), both initial and follow-up sessions. The Contractor shall fully inform all subcontractors, suppliers, and manufacturers of the requirement prior to award of any

subcontracts. To the greatest extent possible, the training sessions and corresponding videos shall be conducted and documented individually by equipment type.

B. Contractor shall submit a draft copy of the DVD and log to the Engineer for review prior to making copies of the training sessions. DVD will be reviewed for sound, lighting, and tape quality.

C. Once approved, Contractor shall provide the Owner eight copies of the DVD for each occasion and/or each piece of equipment. The DVDs shall be properly labeled and logged as per its contents.

D. Copies shall be in the DVD(-R) format.

END OF SECTION

EQUIPMENT AND SYSTEMS INSTRUCTION REPORT

PROJECT: __________________

SYSTEM OR EQUIPMENT: ____

CONTRACTOR NAME: ____________ CONTRACT NO. ______

SPECIFICATION SECTION

NOTE: The Contractor's Representative must maintain and complete this report during instruction.

____

PRELIMINARY INFORMATION

1. To be completed by the Contractor:

   A. Proposed dates for instruction period: From ____________________ To ________________

   B. Name of Representative Instructor: ________________________________

   C. Approximate number of hours of training required: ____________________

2. To be completed by the Owner:

   A. Owner's Designated Personnel to receive instruction: (Identify supervisor, if required).

      1) ____________________ 6) ____________________
      2) ____________________ 7) ____________________
      3) ____________________ 8) ____________________
      4) ____________________ 9) ____________________
      5) ____________________ 10) ____________________

   B. Training Session Location: ________________________________
      ____

- -

RECORD INFORMATION (To be Completed after Instruction Session)

Instructor's Signature: ______________________ Date Instruction Completed: ______________

Construction Managers Signature: ______________________

Owners Signature: ______________________

SPECIAL CONSIDERATIONS/NOTES:

____
____
____
____

Part 1 General

1.01 Scope

A. The work under this Section includes, but is not necessarily limited to, the provision of all labor and material required to perform start-up of all equipment and mechanical systems installed under this Contract.

B. The work defined under this Section includes providing the services of a factory representative in accordance with the requirements of Section 01645 of these Specifications.

C. Certification of start-up and full testing shall be performed by the manufacturer using the services of a factory representative trained in this type service.

D. Unless otherwise specified, the Contractor shall furnish all labor, materials, water, air, oil, power, fuel, chemicals, test equipment and other items required to conduct the field tests, including any retests.

E. The cost of all field testing shall be included in the Contract Price and no separate payment will be made.

1.02 Coordination

The Contractor shall not proceed with any functional test or operating test until the operation and maintenance manuals for the equipment have been submitted and been designated “No Exceptions Taken”. The Contractor shall coordinate all activities required for starting of systems including the visits by the factory representatives, particularly where an equipment item's operation is dependent on the operation of other equipment. Prior to calling the factory representative, the Contractor shall ensure that all necessary related equipment, structures, piping and electrical work is complete. Any required revisits to the site by the factory representative shall be provided by the Contractor.

1.03 Pre Start-Up Maintenance

After installation and prior to start-up, all grease-lubricated joints, shaft couplings and bearings shall be flushed out and re-greased. All oil reservoirs and sumps shall be completely drained and flushed and refilled with the proper lubricant. All operating fluid and gas reservoirs shall be filled with the proper fluid and gases. Screens and filters shall be checked for contamination and replaced if necessary. The equipment shall then be tagged, signed and dated, indicating that the equipment has been properly lubricated or prepared for start-up.

1.04 Installation Inspection

A. Prior to energizing any piece of equipment or performing a functional test, a factory representative of the equipment manufacturer shall inspect the installation of the equipment. The factory representative shall determine if the equipment has been

installed in accordance with the manufacturer's recommendations, pre-start-up maintenance has been performed, and is ready for start-up and the initiation of the functional test.

B. Should the installation inspection indicate that the equipment has been improperly installed or prepared for start-up, the Contractor shall provide such modifications or adjustments as required for the equipment to operate properly.

C. The factory representative shall certify that the equipment has been installed in accordance with the Drawings, Specifications, and the manufacturer's recommendations and that the equipment is ready for start-up and functional testing to be performed.

1.05 Functional Test

A. Following the installation inspection by factory representative, perform a functional test on each piece of equipment. The functional test shall consist of operation of the equipment on a normal duty cycles for a sufficient period of time to determine satisfactory operation. Time required for functional testing shall be as specified in the equipment specifications or a minimum one continuous eight-hour period, whichever is longer. To the maximum extent practical, exercise the full capabilities of all equipment including remote operation, instrumented control schemes, alternate modes of operation and emergency operation.

B. Should the results of the functional test indicate that the equipment has failed to perform in accordance with the Specifications, the Contractor shall make, at no additional cost to the Owner, all modifications or adjustments as required for satisfactory operation, including replacement of any or all components, if necessary. Following the modifications or adjustments, the Contractor shall repeat the functional test. This procedure shall be repeated until the results of the test indicate that the equipment has satisfied the requirements of the applicable Specification Section.

C. After the functional test is completed, each manufacturer shall certify, in writing, that tests were made in accordance with the Specifications and the manufacturer's recommendations, that the functional tests and start-up operation have been satisfactory and that the equipment is fully operational and capable of meeting operating requirements.

1.06 Operating Test Period

A. Following the functional test, the Contractor shall place each system into service and undergo an operating test period under normal service conditions. The minimum time for the operating test period for each system shall be 30 consecutive days, excluding time that the equipment is taken out of service.

B. Where required in the equipment specifications, process performance testing shall be performed during the operating test period in accordance with the requirements of the equipment specifications. The Contractor shall provide all materials and labor, including the services of a factory representative, necessary to perform the performance testing.

C. The test period shall commence upon the initiation of operation of all systems and shall end after the successful operation of the equipment for the minimum time required.

D. The Contractor shall repair and make all modifications required due to mechanical failure of the equipment during the operating test period. Should the equipment fail to meet the performance testing requirements, a factory representative shall evaluate the equipment and determine the cause of the process failure. The Contractor shall make all modifications recommended by the manufacturer.

1.07 Certification

Upon completion of start up, the Contractor shall provide written certification from all equipment manufacturers' factory representatives. Written certification shall indicate that tests were made in accordance with the manufacturer's recommendations, that the test and start-up operation has been satisfactory completed and that the equipment is fully operational under design requirements. Written certification shall be filed with the Engineer on the manufacturers stationary.

END OF SECTION

SEE GENERAL CONDITITIONS ARTICLE GC-19.

SEE GENERAL CONDITITIONS ARTICLE GC-28.

SEE GENERAL CONDITITIONS ARTICLE GC-28.

Part 1 General

1.01 Project Maintenance and Warranty

A. Maintain and keep in good repair the work covered by these Drawings and Specifications until acceptance by the Owner.

B. The Contractor shall warrant for a period of one year from the date of Owner's written acceptance of certain segments of the work and/or Owner's written final acceptance of the Project, as defined in the Contract Documents, that the completed work is free from all defects due to faulty products or workmanship and the Contractor shall promptly make such corrections as may be necessary by reason of such defects. The Owner will give notice of observed defects with reasonable promptness. In the event that the Contractor should fail to make such repairs, adjustments or other work that may be made necessary by such defects, the Owner may do so and charge the Contractor the cost thereby incurred. The Performance Bond shall remain in full force and effect throughout the warranty period.

C. The Contractor shall not be obligated to make replacements which become necessary because of ordinary wear and tear, or as a result of improper operation or maintenance, or as a result of improper work or damage by another Contractor or the Owner, or to perform any work which is normally performed by a maintenance crew during operation.

D. In the event of multiple failures of major consequences prior to the expiration of the one year warranty described above, the affected unit shall be disassembled, inspected and modified or replaced as necessary to prevent further occurrences. All related components which may have been damaged or rendered non-serviceable as a consequence of the failure shall be replaced. A new 12 month warranty against defective or deficient design, workmanship, and materials shall commence on the day that the item is reassembled and placed back into operation. As used herein, multiple failure shall be interpreted to mean two or more successive failures of the same kind in the same item or failures of the same kind in two or more items. Major failures may include, but are not limited to, cracked or broken housings, piping, or vessels, excessive deflections, bent or broken shafts, broken or chipped gear teeth, premature bearing failure, excessive wear or excessive leakage around seals. Failures which are directly and clearly traceable to operator abuse, such as operations in conflict with published operating procedures or improper maintenance, such as substitution of unauthorized replacement parts, use of incorrect lubricants or chemicals, flagrant over- or under-lubrication and using maintenance procedures not conforming with published maintenance instructions, shall be exempted from the scope of the one year warranty. Should multiple failures occur in a given item, all products of the same size and type shall be disassembled, inspected, modified or replaced as necessary and rewarranted for one year.

E. The Contractor shall, at Contractor's own expense, furnish all labor, materials, tools and equipment required and shall make such repairs and removals and shall perform such work or reconstruction as may be made necessary by any structural or functional defect or failure resulting from neglect, faulty workmanship or faulty materials, in any part of the work performed by the Contractor. Such repair shall also include refilling of trenches,

excavations or embankments which show settlement or erosion after backfilling or placement.

F. Except as noted on the Drawings or as specified, all structures such as embankments and fences shall be returned to their original condition prior to the completion of the Contract. Any and all damage to any facility not designated for removal, resulting from the Contractor's operations, shall be promptly repaired by the Contractor at no cost to the Owner.

G. The Contractor shall be responsible for all road and entrance reconstruction and repairs and maintenance of same for a period of one year from the date of final acceptance. In the event the repairs and maintenance are not made immediately and it becomes necessary for the owner of the road to make such repairs, the Contractor shall reimburse the owner of the road for the cost of such repairs.

H. In the event the Contractor fails to proceed to remedy the defects upon notification within 15 days of the date of such notice, the Owner reserves the right to cause the required materials to be procured and the work to be done, as described in the Drawings and Specifications, and to hold the Contractor and the sureties on Contractor's bond liable for the cost and expense thereof.

I. Notice to Contractor for repairs and reconstruction will be made in the form of a registered letter addressed to the Contractor at Contractor's home office.

J. Neither the foregoing Paragraphs nor any provision in the Contract Documents, nor any special guarantee time limit implies any limitation of the Contractor's liability within the law of the place of construction.

END OF SECTION

Part 1 General

1.01 Scope

The work in this Section consists of furnishing all material and equipment and performing all labor necessary for demolishing and disposing of designated facilities indicated on the Drawings.

1.02 Submittals

The Contractor shall submit a written request, to include a detailed demolition procedure, to the Owner for approval at least 10 days before demolition is started. The demolition procedure shall include a detailed description of the methods and equipment to be used for each operation and the sequence of work. The demolition procedures shall provide for safe conduct of work, protection of the property, which is to remain undisturbed and coordination with other work or operation which may be in progress.

Part 2 Products (Not Used)

Part 3 Execution

3.01 Demolition

A. All material shall be removed as necessary for construction, or in any event, to a minimum depth of three feet below finished grades as shown on the Drawings.

B. Any structure, or part thereof, remaining below grade shall be mechanically fractured so that subsurface water will freely pass through the slab or floor of the structure, and so that no void will remain after backfilling the work site to grade as shown on the Drawings.

C. The Contractor shall be responsible for removing all existing service connections to the buildings or site and permanently plugging the pipes where required in accordance with requirements of the utility companies concerned.

D. The Contractor will be responsible for any damage caused to other structures, and shall be held liable for any and all repairs, replacement of parts or renovations required to restore any structure, portion of structure, equipment or items, not intended for demolition. The Contractor shall restore any damaged facilities to their condition prior to demolition provided the damage was result of the demolition. If the Contractor does not repair any such damage immediately, or if the repairs are not suitable to the Owner, the Owner reserves the right to have such repairs made by another party and deduct the cost of required repairs from money due Contractor.

E. Dust-tight, weathertight partitions shall be erected to protect existing facilities from dust and weather while wrecking is in progress and until such time as closures have been

made. Partitions may be constructed of wood and shall have a covering of tarred roofing felt on the weather side.

F. All salvageable metal materials except chlorine gas cylinders shall remain the property of the Owner and shall be cleaned and stored on the Owner's property as directed by the Owner. Chlorine gas cylinders shall be returned to Johnson Controls, Inc.

3.02 Disposal

A. All materials, which are not delivered to the Owner as specified above, shall become the property of the Contractor, and shall be demolished, moved or otherwise disposed of at the option of the Contractor by a method approved by the Owner.

B. All demolished structures, equipment and materials shall be removed from the work site by the Contractor.

C. All demolished structures, equipment and materials which are either left in place or removed to the disposal site shall be in a non-hazardous condition.

D. Manhole frames and covers to be removed are the property of the Owner and shall be delivered to a place designated by the Owner.

END OF SECTION

Part 1 General

1.01 Scope

A. The work covered under this Section includes furnishing all labor, equipment and material required to remove, handle, store and dispose of all materials from existing structures and piping as shown on the Drawings, directed by the Engineer or required for the completion of the work, including all necessary excavation and backfilling.

B. The Contractor shall remove from existing structures and store as directed or dispose of in an approved manner, all valves and piping, mechanical equipment, plumbing, heating, electrical and ventilating fixtures, pipes, ducts, wires and equipment, doors and windows, floor grating and cover plates, steel stairs, pipe railing and the like which are not to remain in service in the finished work, whether or not shown on the Drawings and/or specified herein.

C. The work specified herein and shown on the Drawings is intended to give a general idea of the scope of this work but must not be construed as covering it entirely. The Contractor shall visit the site and judge the amount of work required and the problems Contractor might encounter in the performance of the work.

1.02 Equipment And Piping To Be Removed

A. Remove existing process equipment, electrical equipment and piping as specified below, as shown on the Drawings, and according to the provisions of Section 02060 of these Specifications.

B. Remove above grade piping and appurtenances associated with the existing equipment to be removed.

C. For construction of the temporary hypochlorite storage and feed system consisting of exterior storage tanks, exterior transfer pumps, interior day tank, and interior metering pumps, the existing equipment to be removed and disposed of is located in the Chemical Building and shall include, but may not be limited to, the following:

1. Empty chlorine gas cylinders (to be returned to supplier) and supports

D. For construction of the remaining components of the hypochlorite storage and feed system consisting of the bulk hypochlorite storage room, interior storage tanks, and interior transfer pumps and demolition of the remaining chlorine gas system components, the existing equipment to be removed and disposed of unless otherwise indicated is located in the Chemical Building and shall include, but may not be limited to, the following:

1. Remaining chlorine gas cylinders (to be returned to supplier) and supports.

2. Cylinder floor scales and associated transmitters and wiring.

3. Chlorine scrubber, make-up pumps, recirculation pumps, ductwork, louvers and associated piping, ductwork and appurtenances.

4. Evaporators.

5. Chlorinators, injectors, control panels, associated conduit, valves and piping.

6. Three-ton bridge crane.

7. 6,000 gallon caustic storage tank which the Owner is responsible for emptying prior to the start of construction.

8. 12,000 gallon spill storage tank (to be retained by the Owner).

9. Steam heater located in the South storage room.

Part 2 Products

2.01 Materials

All concrete, mortar, grout, steel reinforcement and backfill used in patching, plugging or repairing shall comply in all respects with the applicable material requirements of these Specifications.

Part 3 Execution

3.01 Removal

A. The Contractor shall exercise full care and shall use such methods and equipment during removal as will maintain the usefulness of the various materials and equipment removed. The sequence and order of removal and the method of storing and disposal of removed equipment and piping shall be at all times subject to the direction and approval of the Engineer and in accordance with the sequencing constraints in Section 01011 of these Specifications.

B. Any damage done to structures or equipment during removal and any patching, plugging of holes or repairs necessitated because of removal of equipment and piping shall be repaired as directed by, and to the satisfaction of, the Engineer and the cost thereof shall be included in the Contract Price.

C. Equipment specified to be removed shall be removed completely, including all related accessories and concrete bases. Any embedded items such as anchor bolts, steel reinforcement, conduit and piping shall be cut off 1-inch below adjacent finished surfaces. The surface shall then be repaired to match adjacent surfaces in finish and appearance.

D. Prior to removing any electrical equipment, all power to the equipment shall be shut off and properly locked out. All power and control wiring for the equipment shall then be disconnected at the starter or circuit breaker, as applicable, and removed from the conduit. Unused conduits shall be plugged.

E. Blemishes or unsightly areas on walls and floors left after removal of equipment shall be cleaned and refinished as necessary to match adjacent surfaces.

F. All holes and openings left after removal of equipment shall be filled or plugged to provide a neat and workmanlike appearance.

G. Where piping designated for removal passes through concrete walls, the openings shall be suitably plugged or capped. Wall pipes and wall sleeves shall be sealed with blind flanges or mechanical joint plugs. Steel pipe sleeves shall be filled with non-shrink grout.

H. Where equipment or piping designated for removal serves to support other equipment or piping designated to remain in service, the Contractor shall provide permanent supports in place of the removed equipment and piping. Where it is necessary to temporarily remove other equipment, piping or electrical work in order to gain access to an item of equipment or piping designated for removal, the Contractor shall restore all such equipment, piping or electrical work to its original condition.

I. Abandoned Piping: Existing vitrified clay, concrete, PVC, cast iron and steel piping to be abandoned shall be cut and plugged or capped at each end. Where existing piping interferes with new piping or construction, it shall be removed beyond the limits required for the proper completion of the work and the open ends plugged or capped. Unless otherwise shown, lines shall be plugged or capped at least 1-inch behind or below finished building surfaces and at least 12-inches below outside grade surfaces.

J. Piping and Valving Reinstallation: The Contractor shall include in the Contract Price the cost of removing, refitting, and reinstalling certain pipe, fittings and valves as shown on the Drawings or as deemed by the Engineer to be satisfactory for reuse.

K. Removal of Existing Concrete and Masonry: Existing concrete and masonry shall be removed and disposed of in accordance with the requirements of Section 02075 of these Specifications.

L. Storage: All materials removed shall remain the property of the Owner and shall be carefully moved and stored on the plant site where directed by the Engineer. Mechanical and electrical equipment shall be stored indoors. If the equipment is too large to store indoors, it shall be stored outdoors above ground and under cover.

M. Disposal: The Engineer will direct the Contractor to assume ownership of and dispose of off-site any removed equipment, piping and materials which the Engineer deems worthless. The cost of disposing of any or all of the removed equipment, piping and materials shall be included in the lump sum prices bid and no separate payment will be made therefore.

END OF SECTION

Part 1 General

1.01 Scope

A. The work described in this Section includes furnishing all labor, equipment and materials to demolish, remove, handle and dispose of all existing concrete and masonry, both plain and reinforced, from existing structures as shown on the Drawings, directed by the Engineer or required for the proper completion of the work, including all excavation and backfilling.

B. Where structural tile and brick is removed from existing structures, the work shall include all patching and reconditioning to restore the remaining tile or brick to its existing state and to provide a proper joint for joining the existing to new construction.

C. Where concrete is cut from existing structures under this Section to permit setting or inserting pipes, flumes, equipment or appurtenances, the work shall include all re-concreting, dressing and finishing of openings to the required lines and dimensions or as necessary for the placing and fixing of inserts.

Part 2 Products

2.01 Materials

A. Tile and brick used for the patching of existing masonry shall be of the same size, color and texture as the tile and brick which they abut. Salvageable tile and brick units which are removed in performing the required alterations may be reused if the exposed faces and edges of the units are in good condition. If satisfactory units are not obtainable through salvage operations, the Contractor shall furnish the required units of new material of similar quality, color and texture.

B. All concrete, grout, steel reinforcement, backfill and other materials furnished in conjunction with this work shall conform in all respects to the applicable material requirements of these Specifications.

Part 3 Execution

3.01 Modification to Existing Concrete and Masonry

A. Existing concrete and masonry to be removed as a part of structural modifications to existing facilities, shall be broken by air hammer and chisel in such manner as to leave adjoining portions of the structure in an undisturbed condition. Blasting shall not, under any circumstances, be used in the removal of concrete or masonry.

B. In removing existing concrete and masonry, special care shall be taken to cut it as closely as possible to the required shape and with no projection into the neat outside line of new work. The surfaces of all concrete and masonry shall be sufficiently rough to bond well with the new work.

C. The Contractor shall take every precaution not to disturb the walls, floors, foundations and footings of existing structures when necessary to remove existing concrete or masonry adjacent thereto. This shall be done by bracing, needling, shoring and installation of other supports as necessary to assure the safety of the structures which are to remain.

D. All walls, footings, floor slabs, columns and other items of existing work directly adjoining new work to be installed at levels lower than existing conditions at locations where designated on the Drawings or directed by the Engineer shall be underpinned as required for safety and by conditions at the site. Responsibility for the adequacy and safety of all underpinning, shoring and bracing shall rest solely upon the Contractor and this work shall be done in such a manner as will positively prevent settlement of or damage to existing work that is to remain.

3.02 Preparation for Bonding to New Work

A. Before any new concrete or masonry is built on or against existing concrete or masonry, the latter shall be scrupulously freed from all dirt, gravel, boulders, ice, snow or other objectionable substances.

B. Existing reinforcement shall lap the reinforcement in the new concrete or masonry as shown on the Drawings or as directed by the Engineer.

C. For new or enlarged openings in existing concrete, existing reinforcing steel shall extend into the new finishing concrete, which shall have a minimum thickness of 3-inches on all surfaces forming the opening.

D. For new openings in existing concrete to accommodate wall pipe or pipe sleeves, the existing reinforcing steel shall be cut only when bending of the reinforcement is not sufficient to permit accurate placement of the pipe. Cutting shall be done only at the Engineer's direction.

E. Bonding of new concrete to existing concrete shall be in accordance with the requirements of Section 03300 of the Specifications.

F. Bonding of grout to existing concrete shall be in accordance with the requirements of Section 03602 of these Specifications.

3.03 Disposal of Material

Unless otherwise directed by the Engineer, all materials removed under this Section shall be removed from the site and disposed of at the Contractor's expense. Point of disposal shall be subject to approval of the Engineer, the property owner and the local jurisdiction responsible for the issuance of dumping permits.

END OF SECTION

Part 1 General

1.01 Scope

A. This Section described materials and equipment to be utilized and requirements for their use in preparing the work site for construction. The Contractor shall furnish all materials, equipment and labor necessary to complete the work.

B. Comply with applicable codes, ordinances, rules, regulations and laws of local, municipal, state or federal authorities having jurisdiction.

1.02 Clearing and Grubbing

A. Within the limits shown on the Drawings, the site will be cleared and grubbed to prepare for construction.

B. Clearing

1. All vegetation such as trees, shrubs, brush, logs, upturned stumps and roots of downed trees, and other similar items shall be removed and disposed of properly by the Contractor as specified below. Cultivated growth shall be removed and trees felled as necessary within the construction work site and as indicated.

2. Where the tree limb structure interferes with utility wires, or where the trees to be felled are in close proximity to utility wires, the tree shall be taken down in sections to eliminate the possibility of damage to the appropriate utility.

3. All buildings, fences, lumber piles, trash and obstructions, except utility poles shall be removed and disposed of by the Contractor. Any work pertaining to utility poles shall comply with the requirements of the appropriate utility.

4. All fences adjoining any excavation or embankment that may be damaged or buried shall be carefully removed, stored and replaced.

C. All stumps, roots, foundations and planking embedded in the ground shall be removed and disposed of properly by the Contractor as specified below. Piling and butts of utility poles shall be removed to a minimum depth of two feet below the limits of excavation for structures, trenches and roadways or two feet below finish grade, whichever is lower.

1.03 Preliminary Grading

Before beginning construction, the Contractor shall grade the entire work site to conform, in general, to the finish elevations shown on the Drawings. The Drawings show both existing contour elevations and finished contour elevations.

1.04 Testing and Inspection Services

A. Soil testing will be performed by an independent testing laboratory selected by the Owner. Payment for soil testing shall be made by the Contractor from the "Soils And Concrete Testing" cash allowance.

B. The soils testing laboratory is responsible for the following:

1. Compaction tests in accordance with ASTM D 698.

2. Field density tests for each two feet of lift; one test for each 5,000 square feet of fill.

3. Inspecting and testing stripped site, subgrades and proposed fill materials.

C. The Contractor's duties relative to testing include:

1. Notifying the laboratory of conditions requiring testing.

2. Coordinating with the laboratory for field testing.

3. Providing representative fill soil samples to laboratory for test purposes. Provide 50 pound samples of each fill soil.

4. Paying costs for additional testing performed beyond the scope of that required and for retesting where initial tests reveals non-conformance with specified requirements.

D. Inspection:

1. Earthwork operations, suitability of excavated materials for fill and backfill, and placing the compaction of fill and backfill is subject to inspection. The Engineer will observe earthwork operations.

2. Foundations and shallow spread footing foundations are required to be inspected by a geotechnical engineer to verify suitable bearing and construction.

Part 2 Products (Not Used)

Part 3 Execution

3.01 Preparation

Maintain bench marks, monuments and other reference points. Re-establish, at no cost to the Owner, any such reference points if disturbed or destroyed.

3.02 Clearing

A. Clear areas required for access to site and execution of work.

B. Remove trees and shrubs within the area to be cleared.

C. Clear undergrowth and deadwood, without disturbing subsoil.

3.03 Disposal of Refuse

A. The refuse resulting from the clearing and grubbing operation shall be hauled to a disposal site secured by the Contractor and shall be disposed of in accordance with all requirements of federal, state, county and municipal regulations. No debris of any kind shall be deposited in any stream or body of water, or in any street or alley. No debris shall be deposited upon any private property except with written consent of the property owner. In no case shall any material be left on the Project, shoved onto abutting private properties, or be buried in embankments or trenches on the Project.

B. When approved in writing by the Engineer and when authorized by the proper authorities, the Contractor may dispose of such refuse by burning on the site of the Project provided all requirements set forth by the authorities are met. The authorization to burn shall not relieve the Contractor in any way from damages which may result from Contractor's operations. On easements through private property, the Contractor shall not burn on the site.

END OF SECTION

Part 1 General

1.01 Related Documents

The Drawings and General Provisions of the Contract, including General and Special Conditions, apply to work of this Section.

1.02 Description of Work

Tree protection shall be accomplished on all areas to be protected from impact by new construction. Tree protection operations include, but are not limited to, the following: Tree protection staking of the areas on the site, construction of tree protection fencing, removal of indicated vegetation, protection of existing trees designated to remain, erosion control, underbrush clean-up and pruning.

1.03 Quality Assurance

A. Qualification of the Workmen: Provide at least one person who shall be present at all times during tree clearing and grubbing operations and who shall direct the trimming of roots and limbs where required. Provide at least one person who is qualified in the various other trades involved including demolition, protection of property and erosion control.

B. Codes and Standards: In addition to complying with all pertinent codes and regulations, comply with the requirements of those insurance carriers providing coverage for this work.

1.04 Job Conditions

A. Dust Control: Use all means necessary to prevent the spread of dust during performance of the work of this Section. Thoroughly moisten all surfaces as required to prevent dust being a nuisance to the work on the site and surrounding areas.

B. Erosion Control: Install and maintain berms, swales, and bales as required to trap waterborne soil particles. As work progresses, relocate and/or add to erosion control system as necessary and described in Section 02125 Erosion Control.

C. Protection: Use all means necessary to protect existing objects designated to remain and, in the event of damage, immediately make all repairs and replacements necessary to the approval of the Landscape Architect at no additional cost to the Owner.

1.05 Tree Protection

A. Protect existing trees and other vegetation indicated to remain in place, against unnecessary cutting, breaking or skinning of roots, skinning and bruising of bark, smothering of trees by stockpiling construction materials or excavated materials within drip line, excess foot or vehicular traffic, or parking of vehicles within drip line.

B. Provide temporary fences, barricades or guards as required to protect trees and vegetation to be left standing.

C. Contractor shall not store, stack or place materials of any form under the dripline of trees to be saved. Equipment such as vehicles shall not be parked under trees or traverse beneath the dripline of trees to be saved.

D. Water trees and other vegetation which are to remain within the limits on the contract work as required to maintain their health during the course of construction operations.

E. Provide protection for roots over 1-1/2-inch diameter that are cut during construction operation. Coat any cut faces with an orange shellac, or other acceptable coating, especially formulated for horticultural use on cut or damaged plant tissues. Temporarily cover all exposed roots with wet burlap to prevent from drying out; provide earth cover as soon as possible.

F. Repair or replace trees and vegetation damaged by construction operations, in a manner acceptable to the Landscape Architect and the authority have jurisdiction in the area. Tree damage repair shall be performed by a qualified tree surgeon. Replace trees which cannot be repaired and restored to full-growth status, as determined by the tree surgeon. Tree replacement shall be in accordance with the City of Johns Creek's ordinance

G. Protect tree root system from damage due to deleterious materials in solution caused by run-off, or spillage during mixing of construction materials or drainage from stored materials. Protect root system from flooding, erosion, or excessive wetting resulting from de-watering operations.

1.06 Tree Penalty

A. The intent of this clause is to emphasize the importance of all trees to be saved. All trees to be saved shall be maintained in an undamaged condition. Damage shall be defined as the act of scarring, nailing, cutting, breaking limbs, etc., of any tree or its root system in such a manner as may cause the tree to be permanently hurt. Accidental damage due to dead trees falling, equipment breakdown, or any act on the part of the operator which appears to the Landscape Architect as unavoidable would not warrant a penalty. However, the Contractor will be liable for consistently damaging trees by accidental damage. Damage due to improper location of utility trenches or ditches will not be considered accidental. The Contractor will be responsible for damage on the part of the operator or operators, whether by method of excavation, use of improper equipment, incompetency of the operator, or failure to properly inform the operator as determined by the Landscape Architect.

B. All trees on the site shall be saved except those marked specifically to be removed, those within the clearing limits on the plans; and those marked specifically on the site by the Landscape Architect to be removed. No tree, either those marked for removal on the site, or any other tree may be removed from the site prior to the Landscape Architect's inspection. Penalties for damage to or removal of any tree not specifically approved by the Landscape Architect on the site will be as follows:

Caliper (Inches)	Height Penalty (Feet)	Height Penalty (Dollars)	Small Trees and Evergreen Trees (Dogwoods, Hollies, Wax Myrtles, Magnolias, Etc. (Feet)	(Dollars)
1-1/2 – 2	14	135.00	6 – 8	130.00
2 – 2-1/2	16	150.00	8 - 10	150.00
2-1/2 - 3	16	182.00	10 – 12	200.00
3 – 3-1/2	16	212.00	12 – 14	250.00
3-1/2 - 4	18	250.00	14 – 16	325.00
4 – 4-1/2	20	295.00	16 – 18	375.00
4-1/2 - 5	22	370.00	18 - Up	
5 - 6	26	475.00	Follow large tree schedule using caliper of trunk	
6 – 7		600.00		
7 – 8		650.00		
8 – 11		1,000.00		
12 - 20		1,500.00		
21 - Larger		2,000.00		

C. Trees will be graded by the Landscape Architect as to species, condition, and site importance with the above figures acting as maximum penalties with the lowest assessment amounting to no less than one-half of the above penalty figures.

D. Disposal: All materials removed by the clearing operation shall be disposed of off-site. No burning of trees, stumps or other matter shall be conducted on the site, unless permission is obtained from the Owner.

Part 2 Products

2.01 Temporary Barricades

Unless otherwise approved by the Landscape Architect, use only new and solid lumber of utility grade or better to construct temporary barricades around trees and areas designated to remain undisturbed.

2.02 Pruning Paint

Use only a pruning paint specifically formulated for horticultural application to cut or damaged plant tissue, and approved by the Landscape Architect for use on this work. Preferably orange shellac.

2.03 Explosives

Do not use explosives in this work.

2.04 Other Materials

All other materials not specifically described, but required for proper completion of the work of this Section, shall be as selected by the Contractor subject to approval of the Landscape Architect.

Part 3 Execution

3.01 Site Inspection

Prior to any work of this Section, carefully inspect the entire site and designate all trees to be preserved.

3.02 Scheduling

A. Schedule all work in a careful manner with all consideration for neighbors and the general public.

B. Notify the Landscape Architect at least five full working days prior to commencing clearing and tree removal work of this Contract.

3.03 Staking

A. The Contractor shall stake the protective fence as to location and configuration. This stake-out may be accurate or rough, depending on the Contractor's preference.

B. The purpose of the staking, with inspection and adjustment by the Landscape Architect, is to adjust the areas of the site to allow the Contractor maximum use of the land. Staking is subject to various degrees of adaptation which can only be determined by the Landscape Architect. This variation is an aesthetic decision, the amount of adjustment most often determined by the existing trees, terrain, soil conditions, sub-surface water, and by other intangibles which are impractical to survey in absolute accuracy.

C. The Contractor shall notify the Landscape Architect at least three working days before inspection of the construction stake-out to coordinate tree protection. During the inspection the Landscape Architect will adjust the stake-out as necessary to fit the trees, topography and all other objects and conditions on the site. At this time the Landscape Architect will clearly mark all trees and other vegetation to be removed. This staking-inspection process must take place prior to any tree removal, grading, construction, or any other work on the site.

D. During the inspection, the Contractor shall be at the site along with the person who will superintend the work under this Contract.

E. The staking-inspection process shall be repeated for any work not staked and approved or adjusted during the first site visit. No work shall ever be done without the stakeout first being adjusted and approved by the Landscape Architect. All alignment, dimensions, and elevation of any grading, excavation, construction, and planting is subject to adjustment to save trees and other vegetation. Refer to the staking process as described in the Special Conditions.

3.04 Topsoil Removal

A. See Section 02100.

B. Where trees are to remain standing, stop topsoil stripping a sufficient distance from such trees to prevent damage to the main root system.

C. Stockpile topsoil in storage piles in areas where directed. Topsoil shall not be stockpiled in tree save areas. Construct storage pile to freely drain surface water. Cover storage pile as necessary to prevent windborne dust and erosion.

3.05 Woodland Clean-Up

A. Clear the site of brush, rubbish, dead limbs, snags, fallen trees, and any other plant material designated by the Landscape Architect to be removed. No trees shall be removed, or limbs and roots cut without prior approval of Landscape Architect or Owner's Representative.

B. Do not remove stumps in areas to be left natural. Do not use root rakes or track equipment under any trees designated to be saved.

C. Prune remaining trees by removing all low hanging limbs less than six feet above the ground. Remove all dead trees, broken trees, leaning trees and deceased trees. Refuse may be removed from the site or chipped with a chipper and spread under the trees.

D. Underbrush all small sprouts, scrubs and weeds as defined on site by Landscape Architect. Landscape Architect shall meet on-site with Contractor to review the requirements and tag trees.

3.06 Erosion Control

Sow grass as necessary during construction to prevent erosion of disturbed areas and prevent damage to tree save areas from runoff and silt.

3.07 Interim Seeding and Maintenance

Seed temporarily with appropriate grass seed in the event that Bermuda grass cannot be sown during the specified season.

3.08 Silt Control

The Contractor shall install silt barriers in locations necessary to prevent eroded material from silting undisturbed vegetation as shown on the Plans.

END OF SECTION

Part 1 General

1.01 Scope

A. The Work specified in this Section consists of providing and maintaining temporary and permanent erosion and sedimentation controls as shown on the Drawings. This Section also specifies the subsequent removal of temporary erosion and sedimentation controls.

B. Temporary and permanent erosion and sedimentation controls include grassing and mulching of disturbed areas and structural barriers at those locations which will ensure that erosion during construction will be maintained within acceptable limits. Acceptable limits are as established by the Georgia Erosion and Sedimentation Control Act of 1975, as amended, Section 402 of the Federal Clean Water Act, and applicable codes, ordinances, rules, regulations, and laws of local, state, and municipal authorities having jurisdiction.

C. Land disturbance activity shall not commence until the Land Disturbance Permit has been issued.

D. Project has been approved by the Georgia D.N.R. for a stream buffer variance and requires that the work be performed in accordance with approved soil erosion and sedimentation control.

1.02 Submittals

Submit product data in accordance with the requirements of Section 01300 of these Specifications.

1.03 Quality Assurance

A. The temporary and permanent erosion and sedimentation control measures shown on the Drawings are minimum requirements. Any additional erosion and sedimentation control measures required by the Contractor's means, methods, techniques, and sequence of operation will be installed by the Contractor at no additional cost to the Owner.

B. Perform all work under this Section in accordance with all pertinent rules and regulations including, but not necessarily limited to, those stated in these Specifications. Where provisions of pertinent rules and regulations conflict with these Specifications the more stringent provisions shall govern.

C. Provide all materials and promptly take all actions necessary to achieve effective erosion and sedimentation control in accordance with the Georgia Erosion and Sedimentation Control Act of 1975 as amended (OCGA §12-7-1, et. seq.), local ordinances, other permits, local enforcing agency guidelines, and these Specifications.

D. Basic Principles

1. Coordinate the land disturbance activities to fit the topography, soil types, and conditions.

2. Minimize the disturbed area and the duration of exposure to erosive elements.

3. Provide temporary or permanent stabilization to disturbed areas immediately after rough grading is complete.

4. Safely convey run-off from the site to a stable outlet to prevent flooding and damage to downstream facilities resulting from increased runoff from the site.

5. Retain sediment on-site that was generated on-site.

6. Minimize encroachment upon watercourses.

E. Implementation

1. The Contractor is solely responsible for the control of erosion within the Project site and the prevention of sedimentation from leaving the Project site or entering waterways.

2. The Contractor shall install temporary and permanent erosion and sedimentation controls which will ensure that runoff from the disturbed area of the Project site shall pass through a filter system before exiting the Project site.

3. The Contractor shall provide temporary and permanent erosion and sedimentation control measures to prevent silt and sediment from entering the waterways and designated wetland areas. The Contractor shall maintain an undisturbed vegetative buffer a minimum of 25 feet from the top of the bank.

4. The Contractor shall limit land disturbance activity to those areas shown on the Drawings.

5. The Contractor shall maintain erosion and sedimentation control measures within disturbed areas on the entire site at no additional cost to the Owner until the final acceptance of the Project. Maintenance shall include mulching, re-seeding, clean-out of sediment barriers and sediment ponds, replacement of washed-out or undermined rip rap and erosion control materials, to the satisfaction of the Owner and Landscape Architect.

6. All fines imposed for improper erosion and sedimentation control shall be paid by the Contractor.

Part 2 Products

2.01 Sediment Barrier

A. Silt Fence

1. Type A silt fence shall meet the requirements of Section 171 of the Georgia Department of Transportation Standard Specifications, latest edition.

2. Type C Silt Fence is a combination of Type A silt Fence with woven wire reinforcement. Type C Silt Fence reinforcement shall meet the requirements of Section 171 of Georgia D.O.T. Specifications.

3. Silt fence fabric shall be an approved product on the Georgia DOT Qualified Product List No. 36, latest edition.

B. Hay Bales: Hay bales shall be clean, seed-free cereal hay, rectangular in shape, and contain five cubic feet or more of material.

C. Concrete Blocks: Concrete blocks shall be hollow, non-load-bearing type.

D. Plywood shall be 3/4-inch thick exterior type.

2.02 Construction Exit Stone

Use sound, tough, durable stone resistant to the action of air and water. Slabby or shaley pieces will not be acceptable. Aggregate size shall be in accordance with the National Stone Association Size R-2 (1.5 to 3.5-inch stone) or Type 3 rip rap stone conforming to Section 805.01 of the Georgia Department of Transportation Standard Specifications.

2.03 Concrete

Concrete shall conform to the requirements specified in Section 03300 of these Specifications for 3,000 psi concrete.

2.04 Rip Rap

A. Stone Rip Rap: Use sound, tough, durable stones resistant to the action of air and unless noted otherwise, stone rip rap shall be Type 1.

1. It is most desirable to utilize “River Rock” for riprap installation on this Project for aesthetic reasons. The size and gradation of the riprap shall generally conform to the referenced Georgia DOT Standards. The River Rock size and gradation shall be submitted as a shop drawing to the Project Landscape Architect for review and approval.

2. Type 1 Rip Rap: Rip rap size and gradation shall conform to Section 805.01 of the Georgia Department of Transportation Standard Specification for Type 1 Stone Dumped Rip Rap.

3. Type 3 Rip Rap: Rip rap size and gradation shall conform to Section 805.01 of the Georgia Department of Transportation Standard Specifications for Type 3 Stone Dumped Rip Rap.

2.05 Plastic Filter Fabric

A. Plastic filter fabric shall conform to the Georgia Department of Transportation Standard Specifications, Section 881.06 for non-woven filter fabrics on most applications for this Project, except for underneath riprap areas or stone construction entrances.

B. Plastic filter fabric shall be an approved product on the Georgia Department of Transportation Qualified Product List No. 28, latest edition.

2.06 Grassing

A. Grassing materials shall meet the requirements of the following sections of the Georgia Department of Transportation Standard Specifications, latest edition:

Material	Section
Topsoil	893.01
Seed and Sod	890
Fertilizer	891.01
Agricultural Lime	882.02
Mulch	893.02
Inoculants	893.04

B. Seed species shall be provided as shown on the Drawings.

C. Mulch Binder: Mulch on slopes exceeding 3 (horizontal) to 1 (vertical) shall be held in place by the use of a mulch binder, as approved by the Project Landscape Architect. The mulch binder shall be non-toxic to plant and animal life and shall be approved by the Project Landscape Architect.

D. Water: Water shall be free of excess and harmful chemicals, organisms, and substances which may be harmful to plant growth or obnoxious to traffic. Salt or brackish water shall not be used. Water shall be furnished by the Contractor.

Part 3 Execution

3.01 General

A. Temporary and permanent erosion and sedimentation control measures shall prevent erosion and prevent sediment from exiting the site. If, in the opinion of the Owner or Project Landscape Architect, the Contractor's temporary erosion and sedimentation control measures are inadequate, the Contractor shall provide

additional maintenance for existing measures or additional devices to control erosion and sedimentation on the site at no additional cost to the Owner.

B. All erosion and sedimentation control devices and structures shall be inspected by the Contractor at least once a week and immediately after each rainfall occurrence. Any device or structure found to be damaged shall be repaired or replaced by the end of the day.

C. All erosion and sedimentation control measures and devices shall be constructed and maintained as indicated on the Drawings or specified herein until adequate permanent disturbed area stabilization has been provided and accepted by the Project Landscape Architect. Once adequate permanent stabilization has been provided and accepted by the Project Landscape Architect, all temporary erosion and sedimentation control structures and devices shall be removed.

3.02 Sediment Control

A. Construction Exit

1. Construction exit(s) shall be placed as shown on the Drawings and as directed by the Project Landscape Architect. A construction exit shall be located at any point traffic will be leaving a disturbed area to a public right-of-way, street, alley, sidewalk, or parking area.

2. Placement of Construction Exit Material: The ground surface upon which the construction exit material is to be placed shall be prepared to a smooth condition free from obstructions, depressions or debris. The plastic filter fabric shall be placed to provide a minimum number of overlaps and a minimum width of one foot of overlap at each joint. The stone shall be placed with its top elevation conforming to the surrounding roadway elevations. The stone shall be dropped no more than three feet during construction.

3. Construction Exit Maintenance: The Contractor shall regularly maintain the exit with the top dressing of stone to prevent tracking or flow of soil onto public rights-of-way and paved surfaces as directed by the Project Landscape Architect.

4. Construction Exit Removal: Construction exit(s) shall be removed and properly disposed of when the disturbed area has been properly stabilized, the tracking or flow of soil onto public rights-of-way or paved surfaces has ceased and as directed by the Project Landscape Architect.

B. Sediment Barriers:

1. Sediment barriers shall include, but are not necessarily limited to, silt fences, hay bales, and any device which prevents sediment from exiting the disturbed area.

2. Silt fences and hay bales shall not be used in any flowing stream, creek, or river.

3. Sediment barriers shall be installed as shown on the Drawings and as directed

by the Owner or Project Landscape Architect.

4. Sediment barriers shall be maintained to ensure the depth of impounded sediment is no more than one-half of the original height of the barrier or as directed by the Project Landscape Architect. Torn, damaged, destroyed, or washed-out barriers shall be repaired, reinforced, or replaced with new material and installed as shown on the Drawings and as directed by the Owner or Project Landscape Architect.

5. Sediment Barrier Removal:

   a. Sediment barrier shall be removed once the disturbed area has been stabilized with a permanent vegetative cover and the sediment barrier is no longer required as directed by the Project Landscape Architect.

   b. Accumulated sediment shall be removed from the barrier and replaced and stabilized on-site as directed by the Owner or Project Landscape Architect.

   c. All non-biodegradable parts of the barrier shall be disposed of properly.

   d. The disturbed area created by barrier removal shall be permanently stabilized.

C. Sediment Boxes: All inlet grates shall be covered with sediment boxes during grading operations and shall remain so covered until all open areas are permanently stabilized against erosion.

3.03 Erosion Control

A. Rip Rap

1. Rip rap shall be placed as shown on the Drawings and as directed by the Project Landscape Architect. Rip rap shall be placed at all points where natural vegetation is disturbed on the banks of active streams. Compact backfill and place rip rap to prevent subsequent settlement and erosion. This requirement applies equally to construction alongside a stream as well as crossing a stream or drainage ditch.

2. When trenching across a stream or drainage ditch, place rip rap over the entire disturbed area upstream and downstream of the trench excavation. Place rip rap across creek bottom, across creek banks, and extend rip rap placement five feet beyond the top of each creek bank.

3. Preparation of Foundations: The ground surface upon which the rip rap is to be placed shall be brought to the correct lines and grades before placement is commenced. Where filling of depressions is required, the new material shall be compacted with hand or mechanical tampers. Unless at creek banks or otherwise shown or specified, rip rap shall begin in a toe ditch constructed in original ground around the toe of the fill or the cut slope. The toe ditch shall be two feet deep in original ground, and the side next to the fill or cut shall have that same slope. After the rip rap is placed, the toe ditch shall be

backfilled and the excess dirt spread neatly on the site.

4. Placement of Plastic Filter Fabric:

   a. Plastic filter fabric shall be placed under all rip rap unless shown or specified otherwise.

   b. Filter fabric shall not be placed under rip rap on stream or drainage ditch crossings.

   c. The surface to receive filter fabric shall be prepared to a smooth condition free from obstructions, depressions, and debris. The filter fabric shall be installed with the long dimension running up the slope and shall be placed to provide a minimum number of overlaps. The fabric shall be placed to provide a minimum width of one foot of overlap at each joint. The fabric shall be placed so that the upstream strip overlaps the downstream strip. The fabric shall be anchored in place with securing pins of the type recommended by the fabric manufacturer. Pins shall be placed on or within 3-inches of the centerline of the overlap. The fabric shall be placed loosely to avoid stretching and tearing during placement of the stone. The fabric shall be protected at all times during construction from clogging due to clay, silts, chemicals, or other contaminants. Contaminated fabric or fabric damaged during installation or during placement of rip rap shall be removed and replaced with uncontaminated and undamaged fabric at no additional cost to the Owner.

5. Placement of Rip Rap: Rip rap shall be placed on a 6-inch layer of soil, crushed stone or sand overlaying the filter fabric. Rip rap shall be placed with its top elevation conforming with the finished grade or the natural existing slope of the stream bank and stream bottom. The stone shall be dropped from no more than a three foot height during construction. Stone rip rap shall be placed to provide a uniform surface to the thickness shown on the Drawings. The thickness tolerance for the course shall be –3 inches and +6 inches.

B. Grassing

1. Grassing shall meet the requirements of Section 700 of the Georgia Department of Transportation Standard Specifications, latest edition, unless specified otherwise.

2. Seed rate, fertilization and other requirements shall be provided as shown on the Drawings.

3. Temporary Stabilization: Temporary stabilization shall be provided as shown on the Drawings and conforming to these Specifications to control erosion on the site. Temporary stabilization shall be provided to any area that will not receive permanent stabilization within the next 14 calendar days. Partial payment requests may be withheld for those portions of the Project not complying with this requirement.

4. Permanent Stabilization:

a. Permanent stabilization shall be provided as shown on the Drawings and conforming to these Specifications to control erosion on the site. Permanent stabilization shall be provided to all areas of land disturbance within seven calendar days of the completion of land disturbance for any area greater than 0.25 acre.

b. Where permanent stabilization cannot be immediately established because of an inappropriate season, the Contractor shall provide temporary stabilization. The Contractor shall return to the site at the appropriate season to provide permanent stabilization in areas that received only temporary stabilization.

3.04 Clean-Up

A. Dispose of all excess erosion and sedimentation control materials in a manner satisfactory to the Owner and Landscape Architect.

B. Final clean-up shall be performed in accordance with the requirements of these Specifications and to the satisfaction of the Owner and Landscape Architect.

END OF SECTION

Part 1 General

1.01 Scope

A. This Section shall apply to all excavation, except trench excavation.

B. Construct all permanent work in areas free from water. Design, construct and maintain all wells, pumps, vacuum systems, sumps, dikes, levees, cofferdams and diversion and drainage channels as necessary to maintain the areas free from water and to protect the areas to be occupied by permanent work from water damage. Remove temporary works after they have served their purpose.

C. The Contractor shall be responsible for the stability of all temporary and permanent slopes, grades, foundations, materials and structures during the course of the Contract. Repair and replace all slopes, grades, foundations, materials and structures damaged by water, both surface and subsurface, to the lines, grades and conditions existing prior to the damage, at no additional cost to the Owner.

Part 2 Products (Not Used)

Part 3 Execution

3.01 Care of Water

A. Except where the excavated materials are designated as materials for permanent work, material from required excavation may be used for dikes, levees, cofferdams and other temporary backfill.

B. Furnish, install, maintain and operate necessary pumping and other equipment for dewatering the various parts of the work and for maintaining the foundation and other parts free from water as required for constructing each part of the work.

C. Install all drainage ditches, sumps and pumps to control excessive seepage on excavated slopes to drain isolated zones with perched water tables and to drain impervious surfaces at final excavation elevation.

D. Dewater by means which will insure dry excavations, preserve final lines and grades, do not disturb or displace adjacent soil.

E. All pumping and drainage shall be done with no damage to property or structures and without interference with the rights of the public, owners of private property, pedestrians, vehicular traffic or the work of other contractors, and in accordance with all pertinent laws, ordinances and regulations.

F. Do not overload or obstruct existing drainage facilities.

G. After they have served their purpose, remove all temporary protective work at a satisfactory time and in a satisfactory manner. All diversion channels and other temporary excavations in areas where the compacted fill or other structures will be

constructed shall be cleaned out, backfilled and processed under the same Specifications as those governing the compacted fill. Fill or grout all temporary dewatering wells unless otherwise directed by the Engineer.

H. When the temporary works will not adversely affect any item of permanent work or the planned usage of the Project, the Contractor may be permitted to leave such temporary works in place. In such instances, breeching of dikes, levees and cofferdams may be required.

3.02 Dewatering

A. By the use of well points, pumps, tile drains or other approved methods, the Contractor shall prevent the accumulation of water in excavated areas. Should water accumulate, it shall be promptly removed.

B. Excavations shall be continuously dewatered to maintain a ground water level no higher than three to four feet below the lowest point in the excavation. Dewatering systems shall be designed to allow for localized variations in the depth of excavations required to reach a suitable foundation. Dewatering shall be accomplished well enough in advance of excavation to ensure that groundwater is already lowered prior to completing the final excavation to finish subgrade.

C. All destabilized subgrade conditions caused by inadequate or untimely dewatering operations shall be undercut and backfilled with suitable backfill material at no additional cost to the Owner.

D. Piezometric observation wells are required to monitor the ground water level to insure proper dewatering prior to excavation below the static water table. The number of wells required will vary depending on the size and depth of structures.

END OF SECTION

Part 1 General

1.01 Related Documents

Drawings and General Provisions of Contract, including General and Supplementary Conditions and Division 1 Specification Sections, apply to this Section. 1.02.

1.02 Summary

A. Extent of shoring and bracing work includes, but is not limited to, the following:

1. Shoring and bracing necessary to protect existing buildings, driveway, streets, walkways, utilities, and other improvements and excavation against loss of ground or caving embankments.

2. Maintenance of sheeting, shoring and bracing.

3. Removal of shoring and bracing, as required.

B. Types of shoring and bracing system includes, but is not limited to, the following:

1. Soldier piles.

2. Lagging.

3. Sheet piling.

4. Trench boxes.

1.03 Quality Assurance

A. Layout drawings for shoring and bracing system calculations and other data shall be prepared and sealed by a registered Professional Engineer licensed in the state where the Project is located.

B. Supervision: Engage and assign supervision of shoring and bracing work to a qualified foundation consultant.

1. Submit name of engaged consultant and qualifying technical experience.

C. Regulations: Comply with local codes and ordinances of governing authorities having jurisdiction.

1.04 Submittals

The Contractor shall prepare and submit a complete Shoring and Bracing Plan, including shop drawings to show detailed plans showing excavation plan views, profiles, and cross sections and narrative describing the materials, sequence of

installation and removal as well as the routine monitoring of the shoring system and any adjacent structures. The Shoring and Bracing Plan shall be fully coordinated with the Excavation Plan and Dewatering System Plan.

1.05 Job Conditions

A. Before starting work, check and verify governing dimensions and elevations. Survey conditions of adjoining properties. Take photographs to record any prior settlement or cracking of structures, pavements, and other improvements. Prepare a list of such damages, verified by dated photographs, and signed by Contractor and others conducting investigation.

B. Survey adjacent structures and improvements, establishing exact elevations at fixed points to act as benchmarks. Clearly identify benchmarks and record existing elevations. Locate datum level used to establish benchmark elevations sufficiently distant so as not to be affected by movement resulting from excavation operations.

C. During excavation, resurvey benchmarks weekly; acquire the services of a Land Surveyor licensed in the state of the Project. Maintain accurate log of surveyed elevations for comparison with original elevations. Promptly notify Owner's Representative if changes in elevations occur or if cracks, sags or other damage is evident.

1.06 Existing Utilities

Protect existing active sewer, water, gas, electricity and other utility services and structures. Notify the Owner and municipal agencies and service utility companies having jurisdiction. Comply with requirements of governing authorities and agencies for protection, relocation, removal and discontinuing of services, as affected by this work.

Part 2 Products

2.01 Materials

General: Provide suitable shoring and bracing materials which will support loads imposed. Materials need not be new, but must be in serviceable condition.

1. If wood is part of shoring system near existing structures, use pressure preservative treated materials or remove before placement of backfill.

Part 3 Execution

3.01 Shoring

A. Wherever shoring is required, locate the system to clear permanent construction and to permit forming and finishing of concrete surfaces. Provide shoring system adequately anchored and braced to resist earth and hydrostatic pressures.

B. Shoring systems retaining earth on which the support or stability of existing structures is dependent must be left in place at completion of work.

3.02 Bracing

A. Locate bracing to clear columns, floor framing construction, and other permanent work. If necessary to move a brace, install new bracing prior to removal of original brace.

B. Do not place bracing where it will be cast into or included in permanent concrete work, except as otherwise reviewed by the Engineer.

C. Install internal bracing, if required, to prevent spreading or distortion to braced frames.

D. Maintain bracing until structural elements are re-braced by other bracing or until permanent construction is able to withstand lateral earth and hydrostatic pressures.

E. Remove sheeting, shoring and bracing in stages to avoid disturbance to underlying soils and damage to structures, pavements, facilities, and utilities.

F. Repair or replace, as acceptable to Owner's Representative, adjacent work damaged or displaced through the installation or removal of shoring and bracing work.

END OF SECTION

Part 1 General

1.01 Scope

A. This Section includes earthwork and related operations, including, but not limited to, clearing and grubbing the construction site, dewatering, excavating all classes of material encountered, pumping, draining and handling of water encountered in the excavations, handling, storage, transportation and disposal of all excavated and unsuitable material, construction of fills and embankments, backfilling around structures and pipe, backfilling all trenches and pits, compacting, all sheeting, shoring and bracing, preparation of subgrades, surfacing and grading, and any other similar, incidental, or appurtenant earthwork operations which may be necessary to properly complete the work.

B. The Contractor shall provide all services, labor, materials, and equipment required for all earthwork and related operations, necessary or convenient to the Contractor, for furnishing complete work as shown on the Drawings or specified in these Contract Documents.

1.02 General

A. The elevations shown on the Drawings as existing are taken from the best existing data and are intended to give reasonably accurate information about the existing elevations. They are not precise and the Contractor shall become satisfied as to the exact quantities of excavation and fill required.

B. Earthwork operations shall be performed in a safe and proper manner with appropriate precautions being taken against all hazards.

C. All excavated and filled areas for structures, trenches, fills, topsoil areas, embankments, and channels shall be maintained by the Contractor in good condition at all times until final acceptance by the Owner. All damage caused by erosion or other construction operations shall be repaired by the Contractor using material of the same type as the damaged material.

D. Earthwork within the rights-of-way of the Department of Transportation, the County Road Department and the respective cities shall be done in accordance with requirements and provisions of the permits issued by those agencies for the construction within their respective rights-of-way. Such requirements and provisions, where applicable, shall take precedence and supersede the provisions of these Specifications.

E. The Contractor shall control grading in a manner to prevent surface water from running into excavations. Obstruction of surface drainage shall be avoided and means shall be provided whereby storm water can be uninterrupted in existing gutters, other surface drains, or temporary drains. Free access must be provided to all fire hydrants, watergates, and meters.

F. Excavation work shall include the removal and subsequent handling of all materials excavated or otherwise removed in performance of the work, regardless of the type, character, composition, or condition of the material.

G. Tests for compaction and density shall be conducted by the Engineer or by an independent testing laboratory selected in accordance with Section 01410 of these Specifications.

1. The soils testing laboratory is responsible for the following:

a. Field compaction testing shall be based on using the maximum dry density determined by the Standard Proctor Compaction Test in accordance with ASTM D 698.

b. Maximum dry density for non-cohesive materials shall mean the maximum index density as determined by the “Maximum Index Density of Soils Using a Vibratory Table”, ASTM D 4253.

c. Determination of in-place backfill density shall be done in accordance with ASTM D 1556, “Density of Soil In Place by the Sand Core Method”, ASTM D 2937, “Density of Soil In Place by the Drive-Cylinder Method” or ASTM D 2922, “Density of Soil and Soil-Aggregate In Place by Nuclear Methods (Shallow Depth)”.

d. Field density tests for each two feet of lift; one test for each 5,000 square feet of fill.

e. Inspecting and testing stripped site, subgrades and proposed fill materials.

2. Contractor's duties relative to testing include:

a. Notifying laboratory of conditions requiring testing.

b. Coordinating with laboratory for field testing.

c. Providing representative fill soil samples to the laboratory for test purposes. Provide 50 pound samples of each fill soil.

3. Inspection

a. Earthwork operations, suitability of excavated materials for fill and backfill, and placing and compaction of fill and backfill is subject to inspection. Engineer will observe earthwork operations.

b. Foundations and shallow spread footing foundations are required to be inspected by a geotechnical engineer to verify suitable bearing and construction.

H. All earthwork operations shall comply with the requirements of OSHA Construction Standards, Part 1926, Subpart P, Excavations, Trenching, and Shoring, and

Subpart O, Motor Vehicles, Mechanized Equipment, and Marine Operations, and shall be conducted in a manner acceptable to the Engineer.

I. It is understood and agreed that the Contractor has made a thorough investigation of the surface and subsurface conditions of the site and any special construction problems which might arise as a result of nearby watercourses and floodplains, particularly in areas where construction activities may encounter water-bearing sands and gravels, or limestone solution channels. The Contractor shall be responsible for providing all services, labor, equipment, and materials necessary or convenient to the Contractor for completing the work within the time specified in these Contract Documents.

Part 2 Products

2.01 Materials And Construction

A. Earthwork Materials

1. Fill Material, General

   a. Approval Required: All fill material shall be subject to the approval of the Engineer.

   b. Notification: For approval of imported fill material, notify the Engineer and testing laboratory at least one week in advance of intention to import material, designate the proposed borrow area, and permit testing as necessary to prove the quality of the material.

2. On-Site Fill Material

   a. All on-site fill material shall be soil exclusive of organic matter, frozen lumps, or other deleterious substances.

   b. It shall contain no rocks or lumps over 3-inches maximum in dimension.

3. Imported Fill Materials: All imported fill material shall meet the requirements of on-site fill material.

4. Sand Cushions and Sand Fill: Sand cushions and sand fill shall consist of a sand-gravel fill of such gradation that 100 percent will pass a 3/8-inch sieve and not more than 10 percent by weight is lost by washing.

5. Coarse Aggregate or Crushed Stone: Coarse aggregate shall conform to the Georgia Department of Transportation Standard Specifications for Construction of Road and Bridges, 800.01, size No. 57, Group I or II.

6. Fine Aggregate: All fine aggregate shall conform to the Georgia Department of Transportation Standard Specifications for Construction of Road and Bridges, 801.01 and shall have the following gradation:

Sieve Size	% Passing
No. 4	100
No. 16	25 - 75
No. 100	0 - 25

Sieve Size	% Passing
No. 8	80 - 100
No. 50	5 - 30
No. 100	0 - 10

7. Pea Gravel: Pea gravel shall be clean, naturally rounded aggregate, 1/8 to 3/4-inch in diameter per ASTM C 33.

8. Top Soil: Dark organic weed free loam, free of muck.

9. Type 3 Rip Rap: The largest pieces shall have a maximum approximate volume of one cubic foot. At least 35 percent of the mass shall be comprised of pieces which weigh 15 pounds or more. The remainder shall be well graded down to the finest sizes. Rock fines shall comprise a maximum of 10 percent of the total mass. Rock fines are defined as material passing a No. 4 sieve. Rip rap size shall conform to Georgia Department of Transportation Section 805.01 Stone Dumped Rip Rap, Type 3.

B. Sheeting, Bracing and Timbering: The Contractor shall furnish, place and maintain all sheeting, bracing and timbering required to properly support trenches and other excavations in open cut and to prevent all movement of the soil, pavement, structures, or utilities outside of the trench or pit.

1. General

a. Cofferdams and bracing design, including computations, shall be prepared before commencing construction operations. Drawings and design computations shall be signed and sealed by a professional engineer registered in the State of Georgia. The Drawings and design computations shall not be submitted to the Engineer.

b. Sheeting, bracing and timbering shall be so placed as to allow the work to be constructed to the lines and grades shown on the Drawings and as ordered by the Engineer.

c. If at any time the method being used by the Contractor for supporting any material or structure in or adjacent to any excavation is not reasonably safe, the Contractor shall provide additional bracing and support necessary to furnish the added degree of safety.

d. All sheeting in contact with the concrete or masonry shall be cut off as directed by the Engineer and left in place.

2. Timber: Timber may be substituted for steel sheet piling when approved by the Engineer. Timber for shoring, sheeting or bracing shall be sound and free of large or loose knots, and in good condition. Size and spacing shall be in accordance with OSHA regulations.

3. Steel Sheet Piling: Steel sheet piling shall be the continuous interlock type. The weight, depth, and section modulus of the sheet piling shall be sufficient to restrain the loads of earth pressure and surcharge from existing foundations and/or live loads. Procedure for installation and bracing shall be so scheduled and coordinated with the removal of the earth that the ground under existing structures shall be protected against lateral movement at all times. The Contractor shall provide closure and sealing between sheet piling and existing facilities. Steel piling within three feet of an existing building, structure or pipeline shall remain in place, unless otherwise directed by the Engineer.

4. Remove bracing and sheeting in units when backfill reaches the point necessary to protect the structures and adjacent property. Leave sheeting in place when, in the opinion of the Engineer, it cannot be safely removed. Cut off sheeting left in place at least two feet below the surface.

C. Other Materials: All other materials not specifically described but required for proper completion of the work of this Section shall be as selected by the Contractor subject to the approval of the Engineer.

D. Stockpile Area: The stockpile area shown on the Drawings shall be used to stockpile soil material for backfilling around structures and to stockpile needed topsoil.

Part 3 Execution

3.01 General

A. Safety: Comply with local regulations and with the provisions of the “Manual of Accident Prevention in Construction” of the Associated General Contractors of America, Inc., Occupational Safety and Health Act and all other applicable safety regulations.

B. Topsoil

1. Remove all topsoil to a depth at which subsoil is encountered, from all areas under buildings, pavements, and from all areas which are to be cut to lower grades or filled.

2. With the Engineer's approval, topsoil to be used for finish grading may be stored on the site.

3. Other topsoil may be used for fill in non-critical areas with approval of the Engineer.

4. Properly dispose of all excess topsoil off site.

C. Bracing and Sheeting

1. Furnish, put in place, and maintain all sheeting, bracing, and shoring as may be required to properly support the sides of all excavations and to prevent all movement of earth which could in any way injure the work, adjacent property or workers.

2. Properly support all excavations in locations indicated on the Drawings and where necessary to conform to all pertinent rules and regulations and these Specifications, even though, such locations are not indicated on the Drawings.

3. Exercise care in the removal of sheeting, shoring, bracing and timbering to prevent collapse or caving of the excavation faces being supported and damage to the work and adjacent property.

4. Do not leave any sheeting or bracing in the trench or excavation after completion of the work, unless approved by the Engineer.

D. Obstructions

1. Remove and dispose of all trees, stumps, roots, boulders, sidewalks, driveways, pavement, pipes, and the like, as required for the performance of the work.

2. Exercise care in excavating around catch basins, inlets and manholes so as to not disturb or damage these structures.

3. Avoid removing or loosening castings or pushing dirt into catch basins, inlets and manholes.

4. Damaged or displaced structures or casting shall be repaired, replaced and dirt entering the structures during the performance of the work shall be removed at no additional cost to the Owner.

E. Utilities to be Abandoned

1. When pipes, conduits, sewers, or other structures are removed from the trench, leaving dead ends in the ground, such ends shall be fully plugged or sealed with brick and non-shrink grout.

2. Abandoned structures such as manholes or chambers shall be entirely removed unless otherwise specified or indicated on the Drawings.

3. All materials from abandoned utilities which can be readily salvaged shall be removed from the excavation and stored on the site at a location as directed by the Owner.

4. All salvageable materials will remain the property of the Owner unless otherwise indicated by the Owner.

F. Extra Earth Excavation

1. In case soft or excessively wet material which, in the opinion of the Engineer, is not suitable, is encountered below the final subgrade elevation of an excavation or underneath a structure, the Engineer may order the removal of this material and its replacement with crushed stone or other suitable material in order to make a suitable foundation for the construction of the structure.

2. All extra excavation made at the order of the Engineer will be paid for on the basis of the actual volume of the excavation as measured by the Engineer. No measurement for payment shall be made until all dewatering as specified in Section 02140 has been successfully accomplished.

G. Cutting Paved Surfaces and Similar Improvements

1. Remove existing pavement as necessary for installing pipe utilities and appurtenances or as otherwise shown on the Drawings.

2. Before removing any pavement, mark the pavement neatly, paralleling pipe lines and existing street lines. Space the marks the width of the trench.

3. Break asphalt pavement along the marks using jack hammers or other suitable tools. Break concrete pavement along the marks by use of jack hammers or by scoring with a rotary saw and breaking below the score by the use of jack hammers or other suitable tools.

4. Do not pull pavement with machines until completely broken and separated from pavement to remain.

5. Do not disturb or damage the adjacent pavement. If the adjacent pavement is disturbed or damaged, remove and replace the damaged pavement. No additional payment will be made for removing and replacing damaged adjacent pavement.

6. Remove and replace sidewalks disturbed by construction for their full width and to the nearest undisturbed joint.

7. The Contractor may tunnel under curbs that are encountered. Remove and replace any curb disturbed by construction to the nearest undisturbed joint.

3.02 Excavation

A. Method

1. All excavation shall be by open cut from the surface except as indicated on the Drawings.

2. All excavations for pipe appurtenances and structures shall be made in such a manner, and to such depth and width, as will give ample room for building the structures, and for bracing, sheeting, and supporting the sides of the excavation, for pumping and draining groundwater which may be encountered, and for the removal from the excavation of all materials excavated.

3. Take special care so that the soil below the bottom of the structure to be built is left undisturbed.

B. Grades: Excavate to grades indicated on the Drawings. Where excavation grades are not indicated on the Drawings, excavate as required to accommodate installation.

C. Disposal of Excavated Material

1. Remove and properly dispose of all excavated material not needed to complete filling, backfilling and grading.

2. Dispose of excess excavated material at off-site locations secured by the Contractor and in accordance with all requirements of federal, state, county, and municipal regulations. No debris of any kind shall be deposited in any stream or body of water, or on any street or alley. No debris shall be deposited on any private property, except by written consent of the property owner. In no case shall any material be left on the Project, shoved onto abutting private properties, or be buried in embankments or trenches on the Project.

3. Dispose of excavated material off site at locations secured by the Contractor and in accordance with all requirements of federal, state, county and municipal regulations. No debris of any kind shall be deposited in any stream or body of water, or on any street or alley. No debris shall be deposited on any private property except by written consent of the property owner. In no case shall any material be left on the Project, shoved onto abutting private properties, or be buried in embankments or trenches on the Project.

4. A site or sites within the overall construction site, or contiguous to it, at locations that can be reached from within the construction site without utilizing public roads for hauling, will be identified by the Engineer as disposal sites for sound rock excavated during the course of rock excavation required by the Project. The Contractor may use these sites, or not, at his sole discretion as the place of final disposal of waste excavated rock so as to comply with Paragraph C.2. Only rock excavated by the Contractor as a part of this Project shall be placed on the sites identified by the Engineer. No rock from off-site, no waste soil, no clearing

debris, no demolition debris shall be disposed of in areas identified b y the Engineer. If the Contractor chooses to use the sites for ultimate disposal, then the waste rock material must be placed in compliance with GA DOT 603.03., B. 1. or 2. to form a covering of substitute rip rap. The material requirements of GA DOT 805.01 limiting the size of the largest pieces of rip rap and excluding "flat slab like" pieces are waived for the substitute rip rap placed on the disposal sites. The placement of substitute rip rap is allowed as a means to dispose of excess rock excavation and is not intended to become an alternate to rip rap specified in the Contract and shown on the Drawings at specific locations.

3.03 Excavating For Structures

A. Earth Excavation

1. Earth excavation shall include all substances to be excavated other than rock. Earth excavation for structures shall be to limits not less than two feet outside wall lines, to allow for formwork and inspection, and further as necessary to permit the trades to install their work. All materials loosened or disturbed by excavation shall be removed from surfaces to receive concrete or crushed stone.

2. No separate payment will be made for earth excavation. The cost of such work and all costs incidental thereto shall be included in the price bid for the item to which the work pertains.

B. Rock Excavation

1. Definition of Rock: Any material which cannot be excavated with a single-tooth ripper drawn by a crawler tractor having a minimum draw bar pull rated at not less than 56,000 pounds (comparable to Caterpillar D 8K or Caterpillar 977 front-end loader, and occupying an original volume of at least one cubic yard). The Engineer shall be the sole determinant as to the limits the material is classified as rock.

2. Excavation: Where rock is encountered within excavation for structures, it shall be excavated to the lines and grades indicated on the Drawings, or as otherwise directed by the Engineer. The Contractor shall be responsible for obtaining any blasting permits required.

3. Blasting: Blasting operations shall be conducted in accordance with all existing ordinances and regulations. All structures shall be protected from the effects of the blast. The blasting shall be done by licensed experienced workers. Dispose of excavated rock in accordance with applicable federal, state, county, and local regulations.

   a. If, in the sole opinion of the Engineer, the Contractor persistently uses excessive blasting charges or blasts in an unsafe or improper manner, the Engineer will direct the Contractor to employ an independent, qualified blasting consultant, approved by the Engineer, to supervise the preparation for each blast and approve the quantity of each charge.

b. The Contractor will notify the Inspector before any charge is set and prior to blasting. Following review by the Inspector regarding the proximity (normally within 300 linear feet) of permanent structures to the blasting site, the Engineer may direct the Contractor to employ an independent qualified specialty subcontractor, approved by the Engineer, to monitor the blasting by use of seismograph, identify areas where light charges must be used, conduct pre-event and post-event inspections of all structures, including photographs or videos, and maintain a detailed written log.

c. Any damage caused as a result of blasting operations shall be promptly repaired by the Contractor at the Contractor's own expense.

4. No allowance shall be made for overcutting or for excavation below the required elevations. The Engineer must be given reasonable notice to measure all rock.

5. If excess excavation is made or the material becomes disturbed so as to require removal below final subgrade elevations or beyond the prescribed limits, the resulting space shall be refilled with Class “C” concrete in accordance with Section 03300 of these Specifications.

C. Excavation for Foundations: Footings and slabs on grades shall rest on undisturbed earth, rock or compacted materials to insure proper bearing.

1. Unsuitable Foundation Material: Any material, in the opinion of the Engineer, which is unsuitable for foundation shall be removed and replaced with compacted crushed stone, or with compacted fill material as directed by the Engineer. No determination of unsuitability will be made until all requirements for dewatering are satisfactorily met.

2. Foundation in Rock: Foundations for a structure shall be on similar materials. Should excavation for a foundation be partially in rock, the Contractor shall undercut that portion of the rock 12-inches and bring the excavation to grade with compacted crushed stone.

3. Pipe Trenches Beneath Structures

a. Where piping or conduit passes beneath footings or slabs resting on grade, trenches shall be excavated to provide a minimum of 6-inches clearance from all surfaces of the pipe or conduit. The trench shall be backfilled to the base of the structure with concrete.

b. No separate payment will be made for concrete backfill of trenches beneath structures. The cost of this work and all costs incidental to it shall be included in the price bid for the item to which the work pertains.

4. Unauthorized Excavation:

   a. Care shall be taken that excavation does not extend below bottom levels of footings or slabs on earth or rock. Should the excavation, through carelessness or neglect, be carried below such levels, the Contractor shall fill in the resulting excess excavation with concrete under footings and compacted approved materials defined in 2.01. Should excavation be carried beyond outside lines of footings such excess excavation shall be filled with concrete, or formwork shall be provided, as directed by the Engineer.

   b. Additional costs of corrective work, made necessary by unauthorized excavation of earth or rock, shall be borne by the Contractor.

D. Unsuitable Bearing

1. If suitable bearings for foundations are not encountered at the elevations indicated on the Drawings, immediately notify the Engineer.

2. Do not proceed further until instructions are received and necessary measurements made for purposes of establishing additional volume of excavation.

3.04 Compaction

A. Fill materials supporting roadways, parking areas, sidewalks, structures, and buildings and backfill around structures shall be compacted to 95 percent of the maximum dry density. The top 12-inches of fill materials supporting structures or pavement shall be compacted to 98 percent of the maximum dry density. Fill placed for general site grading shall be compacted to 90 percent of the maximum dry density.

B. Compaction of embankments shall be by sheepsfoot rollers with staggered, uniformly spaced knobs and suitable cleaning devices. The projected area of each knob and the number and spacing of the knobs shall be such that the total weight of the roller and ballast when distributed over the area of one row of knobs shall be 250 psi. Placement and compaction of materials shall extend beyond the final contours sufficiently to insure compaction of the material at the resulting final surface. Final contours shall then be achieved by a tracked bulldozer shaping the face of the embankment.

C. Compaction of backfill around structures shall be accomplished by heavy power tamping equipment.

D. If tests indicate that density of fill is less than that specified, the area shall be either recompacted or undercut, filled, and compacted until specified density is achieved.

3.05 Fill

A. Controlled Fill

1. The fill for roadways, parking areas, walks, structures, and building slabs on grade shall be controlled fill.

2. After the existing ground or excavated area has been proofrolled and examined by the Engineer, all holes and other irregularities shall be filled and compacted before the main fill is placed.

3. The fill shall be placed in even layers not exceeding 10-inches in depth and shall be thoroughly compacted as herein specified.

4. If an analysis of the soil being placed shows a marked difference from one location to another, the fill being placed shall not be made up of a mixture of these materials.

5. Each different type of material shall be handled continuously so that field control of moisture and density may be based upon a known type of material.

6. No fill shall be placed following a heavy rain without first making certain on isolated test areas that compaction can be obtained without damage to the already compacted fill.

B. Proofrolling

1. All areas where roadways, parking areas, sidewalks, structures, and buildings are to be constructed on cut areas, compacted fill, and other areas where indicated on the Drawings, shall be proofrolled to detect soft spots prior to the placement of fill material and placement of fill, which shall be construction of foundations.

2. Proofrolling shall consist of having a pneumatic-tired roller over the subgrade before the subgrade is shaped. Pneumatic-tired rollers shall have not fewer than four pneumatic tired wheels which shall be of such size and ply that tire pressures can be maintained between 80 and 100 pounds per square inch for 25,000 pound wheel load during rolling operations. Unless otherwise required, rolling shall be done with tires inflated to 90 psi. The roller wheels shall be located abreast in a rigid steel frame. Each wheel shall be loaded with an individual weight box so that each wheel will bear an equal load when traversing uneven ground. The weight boxes shall be suitable for ballast loading such that the load per wheel shall be 25,000 pounds. The spacing of the wheels shall insure that the distance between the nearest edges of adjacent tires shall be not greater than one-half of the tire width of a single tire at the operating pressure for a 25,000 pound wheel load. The roller shall be operated no faster than 10 miles per hour.

3. Proofrolling shall be witnessed by the Engineer.

4. Subgrade shall be proofrolled with six passes of the truck or roller. Depressions that develop during the proofrolling operation shall be filled with suitable material and those filled areas shall be proofrolled with six passes of the roller. If, after having been filled and proofrolled, the subgrade still contains depressions, the area shall be undercut to the full depth of the soft material or five feet, whichever is less, backfilled, recompacted, and rolled to achieve a subgrade acceptable to the Engineer.

5. After the proofrolled subgrade has been accepted by the Engineer, the surface of the subgrade shall be finish rolled with a smooth steel wheel roller weighing not less than 10 tons. Finished surface of the subgrade shall be within a tolerance of 1/4-inch at every point.

6. Conduits, pipes, culverts, and underdrains shall be neither disturbed nor damaged by proofrolling operations. Rollers shall neither pass over, nor approach closer than five feet to, conduits, pipes, culverts, and underdrains unless the tops of those products are deeper than three feet.

C. Placement

1. Prior to placement of any material in embankments, the area within embankment limits shall be stripped of topsoil and all unsuitable materials removed in accordance with this Section. The area shall then be scarified to a depth of at least 6-inches.

2. Fill materials shall be placed in continuous, approximately horizontal layers extending the full width of the embankment cross-section and the full dimension of the excavation where practical and having a net compacted thickness of not over 6-inches.

D. Final Grading: Upon completion of construction operations, the area shall be graded to finish contour elevations and grades shown on the Drawings. Graded areas shall be made to blend into conformation with remaining ground surfaces. All surfaces shall be left smooth and free to drain.

E. Excess Material: Surfaces and slopes of waste fills shall be left smooth and free to drain.

F. Moisture

1. Fill materials shall be placed at optimum moisture content within practicable limits, but not less or more than two percent of optimum. Optimum moisture shall be maintained by sprinkling the layers as placed or by allowing materials to dry before placement.

2. If fill material is too wet, provide and operate approved means to assist the drying of the fill until suitable for compaction.

3. If fill material is too dry, provide and operate approved means to add moisture to the fill layers.

3.06 Backfilling

A. Backfill carefully to restore the ground surface to its original condition. Dispose of excess material in accordance with this Section.

B. Compact backfill underlying roadways, parking areas, sidewalks, structures and buildings in accordance with the requirements of Article 3.04 of this Section.

C. Backfill for Pipe

1. Initial Backfill: Place initial backfill material carefully around the pipe above bedding in uniform 6-inch layers to a depth of at least 18-inches above the pipe bell. Compact each layer thoroughly with suitable hand tools. Do not disturb or damage the pipe. Backfill on both sides of the pipe simultaneously to prevent side pressures. Initial backfill material is earth material excavated from the trench which is clean and free of rock, organics, and other unsuitable material. If materials excavated from the trench are not suitable for use as initial backfill material, obtain suitable materials elsewhere. Compact initial backfill to 90 percent of the maximum dry density unless otherwise specified.

2. Final Backfill: After initial backfill material has been placed and compacted, backfill with general excavated material. Place backfill material in uniform layers and thoroughly compact with heavy power tamping tools of the “Wacker” type. Compact final backfill to 90 percent of the maximum dry density unless otherwise specified.

3. Settlement: If trenches settle, re-fill and grade the surface to conform to the adjacent surfaces.

4. Additional Material

a. Where final grades above the pre-existing grades are required to maintain minimum cover, additional fill material will be shown on the Drawings.

b. Utilize excess material excavated from the trench if the material is suitable.

c. If excess excavated materials are not suitable, or if the quantity available is not sufficient, provide suitable additional fill material.

D. Backfilling Around Structures

1. General

a. Remove debris from excavations before backfilling.

b. Do not backfill against foundation walls until so directed by the Engineer nor until all indicated perimeter insulation and/or waterproofing is in place.

c. Protect such insulation and/or waterproofing during filling operations.

d. Wherever possible, backfilling shall be simultaneous on both sides of walls to equalize lateral pressures.

e. Do not backfill against walls until all permanent construction is in place to furnish lateral support on both top and bottom of wall.

f. Backfilling against walls shall take place after all the concrete in the affected members has attained the specified strengths.

2. Materials: Backfill material placed against structures built or encountered during the work of this Section shall be suitable fill material. No broken concrete, bricks or similar materials will be permitted as backfill.

3.07 Grading

A. General: Perform all rough and finish grading required to attain the elevations indicated on the Drawings. Perform finish grading to an accuracy of ±0.10 foot.

B. Compact backfill underlying roadways, parking areas, sidewalks, structures and buildings in accordance with Article 3.04 of this Section.

C. Backfilling Around Structures

1. General

a. Remove debris from excavations before backfilling.

b. Do not backfill against foundation walls until so directed by the Engineer nor until all indicated perimeter insulation and/or waterproofing is in place.

c. Protect such insulation and/or waterproofing during filling operations.

d. Wherever possible, backfilling shall be simultaneous on both sides of walls to equalize lateral pressures.

e. Do not backfill against walls until all permanent construction is in place to furnish lateral support on both top and bottom of wall.

f. Backfilling against walls shall take place after all the concrete in the affected members has attained the specified strengths.

2. Materials: Backfill material placed against structures built or encountered during the work of this Section shall be suitable fill material. No broken concrete, bricks or similar materials will be permitted as backfill.

D. Treatment After Completion of Grading

1. After grading is completed, permit no further excavation, filling or grading, except with the approval of the Engineer.

2. Use all means necessary to prevent the erosion of freshly graded areas during construction and until such time as permanent drainage and erosion control measures have been installed.

3.08 Surface Water Control

A. Regulations and Permits: Obtain all necessary soil erosion control permits in accordance with the Georgia Soil Erosion and Sedimentation Control Act and all pertinent rules, laws, and regulations of all applicable federal, state, county and municipal regulatory agencies.

B. Unfavorable Weather: Do not place, spread or roll any fill material during unfavorable weather conditions. Do not resume operations until moisture content and fill density are satisfactory to the Engineer.

C. Provide berms or channels to prevent flooding of subgrade. Promptly remove all water collected in depressions.

D. Pumping and Drainage

1. Provide, maintain and use at all times during construction adequate means and devices to promptly remove and dispose of all water from every source entering the excavations or other parts of the work.

2. Dewater by means which will insure dry excavations, preserve final lines and grades, do not disturb or displace adjacent soil.

3. All pumping and drainage shall be done with no damage to property or structures and without interference with the rights of the public, owners of private property, pedestrians, vehicular traffic or the work of other contractors, and in accordance with all pertinent laws, ordinances and regulations.

4. Do not overload or obstruct existing drainage facilities.

3.09 Settlement

A. The Contractor shall be responsible for all settlement of backfill, fills and embankments which may occur within one year after final acceptance of the work by the Owner.

B. The Contractor shall make, or cause to be made, all repairs or replacements made necessary by settlement within 30 days after receipt of written notice from the Engineer or Owner.

3.10 Cleaning

Upon completion of the work of this Section, remove all rubbish, trash, and debris resulting from construction operations. Remove surplus equipment and tools. Leave the site in a neat and orderly condition acceptable to the Engineer, and in conformance with Section 01710 of these Specifications.

END OF SECTION

Part 1 General

1.01 Scope

A. The work under this Section consists of furnishing all labor, equipment and materials and performing all operations in connection with the trench excavation and backfill required to install the pipelines shown on the Drawings and as specified.

B. Excavation shall include the removal of any trees, stumps, brush, debris or other obstacles which remain after the clearing and grubbing operations, which may obstruct the work, and the excavation and removal of all earth, rock or other materials to the extent necessary to install the pipe and appurtenances in conformance with the lines and grades shown on the Drawings and as specified.

C. Backfill shall include the refilling and compaction of the fill in the trenches and excavations up to the surrounding ground surface or road grade at crossing.

D. The trench is divided into five specific areas:

1. Foundation: The area beneath the bedding, sometimes also referenced to as trench stabilization.

2. Bedding: The area above the trench bottom (or foundation) and below the bottom of the barrel of the pipe.

3. Haunching: The area above the bottom of the barrel of the pipe up to a specified height above the bottom of the barrel of the pipe.

4. Initial Backfill: The area above the haunching material and below a plane 18-inches above the top of the barrel of the pipe.

5. Final Backfill: The area above a plane 18-inches above the top of the barrel of the pipe.

E. The choice of method, means, techniques and equipment rests with the Contractor. The Contractor shall select the method and equipment for trench excavation and backfill depending upon the type of material to be excavated and backfilled, the depth of excavation, the amount of space available for operation of equipment, storage of excavated material proximity of man-made improvements to be protected, and prevailing practice in the area.

1.02 Quality Assurance

A. Density: Determination of soil density shall conform to the requirements of Section 02200 of these Specifications.

B. Sources and Evaluation Testing: Testing of materials to certify conformance with the Specifications shall be performed in accordance with Sections 01410 and 02200 of these Specifications.

C. Field density tests for each two feet of lift, one test for each 1,000 feet of pipe installed or more frequently if ordered by the Engineer.

1.03 Safety

Perform all trench excavation and backfilling activities in accordance with the Occupational Safety and Health Act of 1970 (PL 91-596), as amended. The Contractor shall pay particular attention to the Safety and Health Regulations Part 1926, Subpart P "Excavation, Trenching & Shoring" as described in OSHA publication 2226.

Part 2 Products

2.01 Trench Foundation Materials

A. Crushed stone shall be utilized for trench foundation (trench stabilization).

B. Crushed stone shall be as specified in Part 2 of Section 02200 of these Specifications.

2.02 Bedding and Haunching Materials

A. Unless specified otherwise, bedding and haunching materials shall be crushed stone as specified in Part 2 of Section 02200.

B. Earth materials utilized for bedding and haunching shall be suitable materials selected from materials excavated from the trench. Suitable materials shall be clean and free of rock larger than 2-inches at its largest dimension, organics, cinders, stumps, limbs, frozen earth or mud, man-made wastes and other unsuitable materials. Should the material excavated from the trench be saturated, the saturated material may be used as earth material, provided it is allowed to dry properly and it is capable of meeting the specified compaction requirements. When necessary, earth bedding and haunching materials shall be moistened to facilitate compaction by tamping. If materials excavated from the trench are not suitable for use as bedding or haunching material, provide select material conforming to the requirements of this Section at no additional cost to the Owner.

C. Filter Fabric Woven Type

1. Filter fabric associated with bedding shall be a polypropylene woven fabric. The fabric shall be a high modulus type with good separation capabilities. The fabric shall be inert to biological degradation and naturally occurring chemicals, alkalies and acids.

2. The fabric shall have an equivalent opening size (EOS or AOS) of 20 to 45. The

fabric shall also conform to the minimum property values listed in the following table:

Fabric Property	Unit	Test Method	Minimum Value
Grab Tensile Strength	lbs.	ASTM D 4632	200
Grab Tensile Elongation	%	ASTM D 4632	30 (max.)
Mullen Busrst Strength	psi	ASTM D 3786	400
Trapezoid Tear Strength	lbs.	ASTM D 4533	75
Puncture Strength	lbs.	ASTM D 3787	75

3. If ordered by the Engineer, the filter fabric manufacturer shall furnish the services of a competent factory representative to supervise and/or inspect the installation of pipe. This service will be furnished for a minimum of 10 days during initial pipe installation.

4. Filter fabric shall be Mirafi 500X, Amoco 2002 or Exxon GTF-200.

2.03 Initial Backfill

A. Initial backfill material shall be crushed stone or earth materials as specified for bedding and haunching materials.

B. Earth materials utilized for initial backfill shall be suitable materials selected from materials excavated from the trench. Suitable materials shall be clean and free of rock larger than 2-inches at its largest dimension, organics, cinders, stumps, limbs, frozen earth or mud, man-made wastes and other unsuitable materials. Should the material excavated from the trench be saturated, the saturated material may be used as earth material, provided it is allowed to dry properly and it is capable of meeting the specified compaction requirements. When necessary, initial backfill materials shall be moistened to facilitate compaction by tamping. If materials excavated from the trench are not suitable for use as initial backfill material, provide select material conforming to the requirements of this Section.

2.04 Final Backfill

Final backfill material shall be general excavated earth materials, shall not contain rock larger than 2-inches at its greatest diameter, cinders, stumps, limbs, man-made wastes and other unsuitable materials. If materials excavated from the trench are not suitable for use as final backfill material, provide select material conforming to the requirements of this Section.

2.05 Select Backfill

Select backfill shall be materials which meet the requirements as specified for bedding, haunching, initial backfill or final backfill materials, including compaction requirements.

2.06 Concrete

Concrete for bedding, haunching, initial backfill or encasement shall be Class “C” concrete in accordance with Section 03300 of these Specifications.

Part 3 Execution

3.01 Trench Excavation

A. Topsoil and grass shall be removed in accordance with the requirements of Section 02200.

B. Trenches shall be excavated to the lines and grades shown on the Drawings with the centerlines of the trenches on the centerlines of the pipes utilities and to the dimensions which provide the proper support and protection of the pipe and other structures and accessories.

C. Trench Width for Pipelines

1. The sides of all trenches shall be vertical to a minimum of one foot above the top of the pipe. Unless otherwise indicated on the Drawings, the maximum trench width shall be equal to the sum of the outside diameter of the pipe plus two feet. The minimum trench width shall be that which allows the proper consolidation of the haunching and initial backfill material.

2. Excavate the top portion of the trench to any width within the construction easement or right-of-way which will not cause unnecessary damage to adjoining structures, roadways, pavement, utilities, trees or private property. Where necessary to accomplish this, provide sheeting and shoring.

3. Where rock is encountered in trenches, excavate to remove boulders and stones to provide a minimum of 9-inches clearance between the rock and any part of the pipe barrel or manhole.

4. Wherever the prescribed maximum trench width is exceeded, the Contractor shall use the next higher Class or Type of bedding and haunching as shown on the Drawings for the full trench width as actually cut. The excessive trench width may be due to unstable trench walls, inadequate or improperly placed bracing and sheeting which caused sloughing, accidental over-excavation, intentional over-excavation necessitated by the size of the Contractor's tamping and compaction equipment, intentional over-excavation due to the size of the Contractor's excavation equipment, or other reasons beyond the control of the

Engineer or Owner.

D. Depth

1. The trenches shall be excavated to the required depth or elevation which allow for the placement of the pipe and bedding to the dimensions shown on the Drawings.

2. Pressure Mains

a. Depth of Trenches: Excavate trenches to provide depths as shown on the Drawings. The depth of cover shall not exceed that as shown on the Drawings by more than two feet, without approval of the Engineer.

b. Excavate trenches to provide a minimum cover of four feet. Within streets or roadways, also excavate to place the top of the pipe a minimum of four feet below the nearest pavement edge.

c. Increase the depth of cover where specifically shown on the Drawings and where necessary to avoid interference with underground utilities and obstructions.

3. Where rock is encountered in trenches for pipelines, excavate to the minimum depth which will provide clearance below the pipe barrel of 8-inches for pipe 21-inches in diameter and smaller and 12-inches for larger pipe, valves and manholes. Remove boulders and stones to provide a minimum of 6-inches clearance between the rock and any part of the pipe, manhole or accessory.

E. Excavated Materials

1. Excavated materials shall be placed adjacent to the work to be used for backfilling as required. Top soil shall be carefully separated and lastly placed in its original location.

2. Excavated material shall be placed sufficiently back from the edge of the excavation to prevent caving of the trench wall, to permit safe access along the trench and not cause any drainage problems. Excavated material shall be placed so as not to damage existing landscape features or man-made improvements.

3.02 Sheeting, Bracing and Shoring

A. Sheeting, shoring and bracing shall be in accordance with the requirements of Section 02200 of these Specifications.

B. Trench Shield: A trench shield or box may be used to support the trench walls. The use of a trench shield does not necessarily preclude the additional use of bracing and sheeting. When trench shields are used, care must be taken to avoid disturbing the alignment and grade of the pipe or disrupting the haunching of the pipe as the shield is moved. When the bottom of the trench shield extends below the top of the pipe, the

trench shield will be raised in 6-inch increments with specified backfilling occurring simultaneously. At no time shall the trench shield be “dragged” with the bottom of the shield extending below the top of the pipe or utility.

C. Remove bracing and sheeting in units when backfill reaches the point necessary to protect the pipe and adjacent property. Leave sheeting in place when in the opinion of the Engineer it cannot be safely removed or is within three feet of an existing structure, utility, or pipeline. Cut off any sheeting left in place at least two feet below the surface.

D. Sheet piling within three feet of an existing structure or pipeline shall remain in place, unless otherwise directed by the Engineer.

3.03 Trench Rock Excavation

A. Rock excavation shall be in accordance with the requirements of Section 02200 of these Specifications.

B. Definition of Trench Rock: Any material which cannot be excavated with conventional excavating equipment, and is removed by drilling and blasting, and occupies an original volume of at least one-half cubic yard.

C. Removal of Rock: Dispose of rock off site that is surplus or not suitable for use as rip rap or backfill.

3.04 Dewatering Excavations

A. Dewater all excavations in accordance with the requirements of Section 02200 and 02140 of these Specifications.

B. In all cases, accumulated water in the trench shall be removed before placing bedding or haunching, laying pipe, placing concrete or backfilling.

C. Dewater by use of a well point system when pumping from sumps does not lower the water level two feet below the trench bottom. Where soil conditions dictate, the Contractor shall construct well points cased in sand wicks. The casing, 6 to 10-inches in diameter, shall be jetted into the ground, followed by the installation of the well point, filling casing with sand and withdrawing the casing.

3.05 Trench Foundation and Stabilization

A. The bottom of the trench shall provide a foundation to support the pipe and its specified bedding. The trench bottom shall be graded to support the pipe and bedding uniformly throughout its length and width.

B. If, after dewatering as specified above, the trench bottom is spongy, or if the trench bottom does not provide firm, stable footing and the material at the bottom of the trench will still not adequately support the pipe, the trench will be determined to be unsuitable and the Engineer shall then authorize payment for trench stabilization.

C. Should the undisturbed material encountered at the trench bottom constitute, in the opinion of the Engineer, an unstable foundation for the pipe, the Contractor shall be required to remove such unstable material and fill the trench to the proper subgrade with crushed stone [or surge stone] as directed by the Engineer.

D. Where the replacement of unsuitable material with crushed stone does not provide an adequate trench foundation, the trench bottom shall be excavated to a depth of at least two feet below the specified trench bottom. Place filter fabric in the bottom of the trench and support the fabric along the trench walls until the trench stabilization, bedding, haunching and pipe have been placed at the proper grade. The ends of the filter fabric shall be overlapped above the pipe.

E. Where the replacement of unsuitable material with crushed stone does not provide an adequate trench foundation, the trench bottom shall be excavated to a depth of at least two feet below the specified trench bottom. Place the crushed stone [or surge stone] in the bottom of the trench and compact. Place the filter fabric over this stone and support the fabric along the trench walls until the bedding, haunching and pipe have been placed at the proper grade. The ends of the fabric shall be laid over the haunching material prior to the placement of the initial backfill.

F. Where trench stabilization is provided, the trench stabilization material shall be compacted to at least 90 percent of the maximum dry density, unless shown or specified otherwise.

3.06 Bedding and Haunching

A. Prior to placement of bedding material, the trench bottom shall be free of any water, loose rocks, boulders or large dirt clods.

B. Bedding material shall be placed to provide uniform support along the bottom of the pipe and to place and maintain the pipe at the proper elevation. The initial layer of bedding placed to receive the pipe shall be brought to the grade and dimensions indicated on the Drawings. All bedding shall extend the full width of the trench bottom. The pipe shall be placed and brought to grade by tamping the bedding material or by removal of the excess amount of the bedding material under the pipe. Adjustment to grade line shall be made by scraping away or filling with bedding material. Wedging or blocking up of pipe shall not be permitted. Applying pressure to the top of the pipe, such as with a backhoe bucket, to lower the pipe to the proper elevation or grade shall not be permitted. Each pipe section shall have a uniform bearing on the bedding for the length of the pipe, except at joints.

C. At each joint, excavate bell holes of ample depth and width to permit the joint to be assembled properly and to relieve the pipe bell of any load.

D. After the pipe section is properly placed, add the haunching material to the specified depth. The haunching material shall be shovel sliced, tamped, vigorously chinked or otherwise consolidated to provide uniform support for the pipe barrel and to fill completely the voids under the pipe, including the bell hole. Prior to placement of the haunching material, the bedding shall be clean and free of any water, loose rocks,

boulders or dirt clods.

E. Gravity Pipelines and Accessories: Lay PVC pipe with minimum Class “B” bedding. Lay all other pipe with Class “C” bedding, unless shown or specified otherwise.

1. Class “A” (Bedding Factor - 2.8): Excavate the bottom of the trench flat at a minimum depth as shown on the Drawings, below the bottom of the pipe barrel. Lay pipe to line and grade on concrete block. Place concrete to the full width of the trench and to a height of one-fourth of the outside diameter of the pipe above the invert.

2. Class “B” (Bedding Factor - 1.9): Excavate the bottom of the trench flat at a minimum depth as shown on the Drawings, below the bottom of the pipe barrel. Place and compact bedding material to the proper grade. Haunching material shall then be carefully placed by hand and compacted to provide full support under and up to the centerline of the pipe.

3. Class “C” (Bedding Factor - 1.5): Excavate the bottom of the trench flat at a minimum depth as shown on the Drawings, below the bottom of the pipe barrel. Place and compact bedding material to the proper grade. Haunching material shall then be carefully placed by hand and compacted to provide full support under and up to a height of one-fourth the outside diameter of the pipe above the bottom of the pipe barrel.

4. HDPE Pipe: Excavate the bottom of the trench flat at a minimum depth as shown on the Drawings, below the bottom of the pipe barrel. Place and compact bedding material to the proper grade. Haunching material shall be carefully placed by hand and compacted to provide full support under and up to 18-inches over the top of the pipe for pipe 42-inches in diameter and larger, and 12-inches over the top of the pipe for pipe 36-inches in diameter and smaller.

5. Type 5: Excavate the bottom of the trench flat at a minimum depth as shown on the Drawings, below the bottom of the pipe barrel. Place and compact bedding material to the proper grade before installing pipe. After the pipe has been brought to the proper grade, haunching material shall be carefully placed by hand and compacted to the top of the pipe.

F. Manholes: Excavate to a minimum of 12-inches below the planned elevation of the base of the manhole. Place and compact crushed stone bedding material to the required grade before constructing the manhole.

G. Pressure Mains

1. Ductile Iron Pipe

a. Unless otherwise shown on the Drawings or specified, utilize earth materials for bedding and haunching. Type 2, 3, 4 and 5 bedding shall be as detailed on the Drawings.

b. Unless specified or shown otherwise, bedding shall meet the requirements for Type 2 Pipe Bedding. Unless specified or shown otherwise for restrained joint pipe and fittings, bedding shall meet the requirements for Type 3 Pipe Bedding.

c. Where the depth of cover over the piping exceeds feet, the pipe bedding shall meet the requirements of Type 4 Pipe Bedding. Where the depth of cover over the piping exceeds feet, the pipe bedding shall meet the requirements of Type 5 Pipe Bedding.

d. Type 4 or Type 5 Pipe Bedding called for on the Drawings, specified or ordered by the Engineer, shall meet requirements for Type 4 or Type 5 Pipe Bedding, utilizing crushed stone bedding and haunching material.

2. Polyvinyl Chloride Pipe

a. Unless shown otherwise on the Drawings, utilize earth materials for bedding and haunching.

b. Unless shown otherwise on the Drawings, bedding and haunching shall meet the requirements for Type 2 Pipe Bedding, as detailed on the Drawings.

H. Excessive Width and Depth

1. Gravity Pipelines: If the trench is excavated to excess width, provide the bedding class with the next higher bedding factor. Crushed stone haunching and initial backfill may be used in lieu of Class “A” bedding, where Class “A” bedding is necessitated by excessive trench width.

2. [Water] [Force] [Pressure] Mains: If the trench is excavated to excess width, provide the next higher type or class of pipe bedding as detailed on the Drawings.

3. If the trench is excavated to excessive depth, provide crushed stone to place the pipe at the proper elevation or grade.

I. Compaction: Bedding and haunching materials under pipe, manholes and accessories shall be compacted to a minimum of 90 percent of the maximum dry density, unless shown or specified otherwise.

3.07 Initial Backfill

A. Initial backfill shall be placed to anchor the pipe, protect the pipe from damage by subsequent backfill and ensure the uniform distribution of the loads over the top of the pipe.

B. Place initial backfill material carefully around the pipe in uniform layers to a depth of at least 18-inches above the pipe barrel or duct bank. Layer depths shall be a maximum of 6-inches for pipe 18-inches in diameter and smaller and a maximum of 12-inches for pipe larger than 18-inches in diameter.

C. Backfill on both sides of the pipe simultaneously to prevent side pressures.

D. Compact each layer thoroughly with suitable hand tools or tamping equipment.

E. Initial backfill shall be compacted to a minimum 90 percent of the maximum dry density, unless shown or specified otherwise.

F. For PVC gravity pipelines, crushed stone shall be used for initial backfill up to 6-inches above the pipe barrel.

G. If materials excavated from the trench are not suitable for use as backfill materials, provide select backfill material conforming to the requirements of this Section.

3.08 Concrete Encasement for Pipelines

Where concrete encasement is shown on the Drawings for pipelines not under structures, excavate the trench to provide a minimum of 6-inches clearance from the bell of the pipe. Lay the pipe to line and grade on concrete blocks. In lieu of bedding, haunching and initial backfill, place concrete to the full width of the trench and to a height of not less than 6-inches above the pipe bell. Do not backfill the trench for a period of at least 24 hours after concrete is placed.

3.09 Final Backfill

A. After initial backfill material has been placed and compacted, backfill with final backfill material. Place backfill material in uniform layers, compact each layer thoroughly as follows:

1. In 6-inch layers, if using light power tamping equipment, such as a “jumping jack”.

2. In 12-inch layers, if using heavy tamping equipment, such as hammer with tamping feet.

3. In 24-inch layers, if using a hydra-hammer.

B. Final backfill shall be compacted to a minimum 90 percent of the maximum dry density, unless specified otherwise.

C. Backfill carefully to provide a finished grade at the elevations shown on the Drawings.

D. The top 6-inches shall be topsoil obtained as specified in Section 02200 of these Specifications.

E. If materials excavated from the trench are not suitable for use as backfill materials, provide select backfill material conforming to the requirements of this Section.

F. Settlement: If trench settles, re-fill and grade the surface to conform to the adjacent surfaces.

G. Remove and dispose of excess or unsuitable materials in accordance with the requirements of Section 02200 of these Specifications.

3.10 Additional Material

Where final grades above the pre-construction grades are required to maintain minimum cover, additional fill material will be as shown on the Drawings. Utilize excess material excavated from the trench, if the material is suitable. If excess excavated materials are not suitable, or if the quantity available is not sufficient, provide additional suitable fill material.

3.11 Backfill Under Roads

Compact backfill underlying pavement and sidewalks, and backfill under dirt and gravel roads to a minimum 95 percent of the maximum dry density. The top 12-inches shall be compacted to a minimum of 98 percent of the maximum dry density.

3.123 Backfill Along Restrained Joint Pipe

Backfill along restrained joint pipe shall be compacted to a minimum 90 percent of the maximum dry density.

3.13 Detection Tape

Where required, detection tape shall be buried 4 to 10-inches beneath the ground surface directly over the top of the pipe. Should detection tape need to be installed deeper, the Contractor shall provide 3-inch wide tape. In no case shall detection tape be buried greater than 20-inches from the finished grade surface. Detection Tape shall be installed for all PVC pipes.

END OF SECTION

Part 1 General

1.01 Scope

Dispose of waste soils, cleared and grubbed materials which are in excess of or are unsuitable for use in the permanent work.

Part 2 Products (Not Used)

Part 3 Execution

3.01 Waste Disposal

A. Dispose of the cleared and grubbed materials by burning, if approved by proper authorities and authorized by the Engineer, or by other satisfactory methods. Burying of burned and non-flammable materials in waste disposal areas shall be considered as a satisfactory method of disposal, provided that minimum earth coverage of 18-inches below normal ground level is maintained, plus a mound of approximately 6-inches above normal ground level. At no time shall a fire be unattended, and the Contractor shall be responsible for damage occasioned by such fires. Disposal of materials in streams is not acceptable; do not pile materials in stream channels or along the banks subject to flooding. Timber within the areas cleared shall become the property of the Contractor. The Contractor may cut, trim, hew, saw or otherwise dress felled timber within the limits of the work area, provided all timber and all waste materials are disposed of as specified. All fence material removed within the areas to be cleared shall become the property of the Contractor and shall be removed from the job site.

B. Dispose of excavated materials not meeting specifications for use as compacted fill or other required fills in a designated waste disposal area, as approved by Engineer. That material from stripping which is suitable for use as topsoil shall be stockpiled in sufficient quantity to provide not less than 4-inches of topsoil on slopes of the compacted fill, on the cut slopes and embankment slopes of road construction, and in other areas requiring sprigging and seeding. The topsoil so placed shall be outside the gross sections indicated on the Drawings and shall be uniformly spread and graded but shall not be compacted.

C. Material placed in the waste disposal areas shall be placed in lifts. Compaction shall be obtained by routing the haul equipment and spreading equipment over the fill in a uniform manner to obtain uniform compaction effort. Leave waste disposal areas in a neat and sightly condition and slope to provide positive drainage away from all structures except drainage channels. Place only those materials which are in excess and not suitable for other use in the waste disposal area.

END OF SECTION

Part 1 General

1.01 Scope

A. This work shall consist of furnishing all labor, materials, and equipment necessary for the construction of concrete gutter and concrete combined curb and gutter which shall consist of detached gutter and monolithic curb and gutter respectively, constructed of Portland cement concrete, at the locations, and to the lines, grades, cross-section, form, and dimensions indicated on the Drawings or as directed by the Owner and in conformity with the provisions and requirements set out in these Specifications.

B. Cement concrete gutter and combined curb and gutter shall include all necessary excavation, unless otherwise indicated, and subgrade preparation; backfilling, and final clearing up; and completion of all incidentals thereto, as indicated on the Drawings or as directed by the Owner.

1.02 Product Handling

A. Protection: Use all means necessary to protect concrete materials before, during, and after installation and to protect the installed work and materials of all other trades.

B. Replacement: In the event of damage, immediately make all repairs and replacements necessary to the approval of the Owner at no additional cost to the Owner.

Part 2 Products

2.01 Concrete Reinforcement

Concrete reinforcement shall conform to the requirements of ASTM A 615, (Grade 60) and applicable criteria within Section 03300 of these Specifications.

2.02 Concrete and Related Materials

A. General: Concrete and related materials including, but not necessarily limited to, joint materials, membranes, and curing compounds shall conform to Section 03300 of these Specifications.

B. Class: All concrete shall be Class "A" (compressive strength at 28 days = 4,000 psi) conforming to applicable requirements of Section 03300 of these Specifications.

C. Water used in mixing concrete shall be fresh, clean, potable water free from injurious amounts of oil, acid, alkali, vegetable, wastewater, and/or organic matter. Water shall be considered as weighing 8.33 pounds per gallon.

D. Admixtures shall meet the following requirements:

1. Except as herein specified, no curative or hardening admixtures shall be used.

2. An air entrainment agent capable of providing three to six percent air shall be used. Air entraining admixtures which are added to concrete mixtures shall conform to ASTM C 260 for Air Entraining Admixtures for Concrete.

E. Sub-base shall be constructed of durable material such as crushed stone, crushed limestone, bank-run gravel, blast furnace slag, or steam-boiler cinders. Minimum depth of sub-base below curbing shall be 2-inches.

F. Joint filler shall be a non-extruding joint material conforming to AASHTO M213 for Preformed Expansion Joint Fillers for Concrete Paving and Structural Construction (non-extruding and resilient bituminous types). The filler for each joint shall be furnished in a single piece for the full depth and width required for the joint unless otherwise specified by the Owner.

2.03 Other Materials

All other materials, not specifically described, but required for complete and proper installation of the work of this Section shall be as selected by the Contractor subject to the approval of the Project Landscape Architect.

Part 3 Execution

3.01 Earthwork

A. General: All earthwork shall be performed in accordance with Section 02200 of these Specifications and as specified in this Section.

B. Backfilling:

1. After the concrete has set sufficiently, the spaces on both sides of the gutter and combined curb and gutter shall be backfilled, and the materials compacted and left in a neat condition.

2. Curbs to be used in the construction of asphalt pavements shall be backfilled prior to placement of base material.

3.02 Installation

A. Concrete Reinforcement: All concrete reinforcement shall be installed in accordance with Section 03300 of these Specifications and as indicated on the Drawings.

B. Forming

1. Forms shall be metal and of an approved section. They shall be straight, free from distortions, and shall show no vertical variation greater than 1/8-inch in

10 feet, and shall show no lateral variation greater than 1/4-inch in 10 feet from the true plane surface on the vertical face of the form.

2. Forms shall be of the full depth of the structure and be so constructed as to permit the inside forms to be securely fastened to the outside forms.

3. Securely hold forms in place true to the lines and grades indicated on the Drawings.

4. Wood forms may be used on sharp turns and for special sections as approved by the Owner.

5. Where wooden forms are used, they shall be free from warp and the nominal depth of the structure.

6. All mortar and dirt shall be removed from forms and all forms shall be thoroughly oiled or wetted before any concrete is deposited.

7. The supply of forms shall be sufficient to permit their remaining in place at least 12 hours after the concrete has been placed.

C. Concrete: Concrete shall be placed in accordance with Section 03300 of these Specifications.

D. Joints

1. Joints shall be constructed as indicated on the Drawings and as specified.

2. Construct joints true to line with their faces perpendicular to the surface of the structure and within 1/4-inch of their designated position.

3. Thoroughly spade and compact the concrete at the faces of all joints to fill all voids.

4. Install expansion joint materials at the point of curve at all street returns.

5. Install expansion joint material behind the curb at abutment to sidewalks and adjacent structures.

6. Place contraction joints every 10 feet along the length of the curbs and gutters.

7. Form contraction joints using steel templates or division plates which conform to the cross section of the structure. Leave the templates in place until the concrete has set sufficiently to hold its shape, but remove them while the forms are still in place.

8. Contraction joint templates or plates shall not extend below the top of the steel reinforcement or shall be notched to permit the reinforcement to be continuous through the joint.

9. Contraction joints shall be a minimum of 1-1/2-inches deep.

E. Finishing

1. Strike off the surface with a template and finish the surface with a wood float using heavy pressure, after which contraction joints shall be made and the surface finished with a wood float or steel trowel.

2. Finish the face of the curbs at the top and bottom with an approved finishing tool of the radius indicated on the Drawings.

3. Finish edges with an approved finishing tool having a 1/4-inch radius.

4. Provide a final broom finish by lightly combing with a stiff broom after troweling is complete.

5. The finished surface shall not vary more than 1/8-inch in 10 feet from the established grade.

F. Concrete Curing

1. After finishing operations have been completed and immediately after the free water has left the surface, the surface of the structure shall be completely coated and sealed with a uniform layer of curing compound.

2. The compound shall be applied in one or two applications as directed by the Owner. When the compound is applied in two increments, the second application shall follow the first application within 30 minutes.

3. The compound shall be applied continuously by means of an automatic self-propelled, pressure sprayer as approved by the Owner at the rate directed by the Owner, but not less than one gallon per 200 square feet of surface.

4. The equipment shall provide adequate stirring of the compound during application.

5. Should the method of applying the compound not produce uniform coverage, its use shall be discontinued, and the curing shall be by another method approved by the Owner.

G. Protection

1. Provide and use sufficient coverings for the protection of the concrete in case of rain or breakdown of curing equipment.

2. Provide necessary barricades and lights to protect the Work and rebuild or repair to the approval of the Owner. All damage caused by people, vehicles, animals, rain, the Contractor's operations, and the like shall be repaired by the Contractor at no additional expense to the Owner.

H. Driveway and Sidewalk Ramp Openings

1. Provide driveway openings of the widths and at locations as indicated on the Drawings and directed by the Project Landscape Architect.

2. Provide sidewalk ramp openings as indicated on the Drawings in conformance with the applicable regulations and as directed by the Project Landscape Architect.

3.03 Patching

Inspect, patch and repair all concrete in accordance with the requirements of these Specifications.

3.04 Road and Drainage Excavation

Site excavation, as indicated on the Drawings or as directed by the Owner, shall be performed in accordance with the requirements of Section 02200 of these Specifications.

3.05 Subgrade Preparation

The subgrade shall be formed by excavating to the required depth below the finished surface of the respective types, in accordance with the dimensions and designs indicated on the Drawings or as directed by the Owner, and shall be of such width as to permit the proper installation and bracing of forms. The subgrade shall be compacted by hand tamping and all soft, yielding or unsuitable material shall be removed and backfilled with satisfactory material and again compacted thoroughly and finished to a smooth and unyielding surface. The finished grade shall be to the dimensions and design indicated on the Drawings or as directed by the Owner for the bottom of the proposed construction.

3.06 Cleaning

A. All excess or unsuitable material shall be disposed of in a manner satisfactory to the Owner.

B. Final clean-up shall be performed in accordance with the requirements of these Specifications.

C. All material becoming the property of the Owner shall be stored in a manner and at locations near or on the Project as directed by the Owner.

END OF SECTION

Part 1 General

1.01 Scope

A. Concrete sidewalk shall be constructed of Portland cement concrete, at the locations and to the dimensions, lines, grades and cross section indicated on the Drawings or as directed by the Engineer and in conformity with the provisions and requirements set out in these Specifications.

B. Concrete driveways shall be constructed of Portland cement concrete, at the locations and to the dimensions, lines, grades and cross section indicated on the Drawings or as directed by the Engineer, and in conformity with the provisions and requirements set out in these Specifications.

C. Concrete sidewalk and driveway shall include all the necessary excavation, unless otherwise indicated, subgrade and subbase preparation, backfilling, final clearing up and completing all incidentals thereto, as indicated on the Drawings or as directed by the Engineer.

Part 2 Products

2.01 Materials

A. Materials used in the construction of sidewalks and driveways, in addition to the general requirements of these Specifications, shall conform, unless otherwise stipulated, to the following:

1. Concrete shall be manufactured of the materials meeting the requirements of and in accordance with the provisions and requirements for Class “A” concrete as set out in Section 03300 of these Specifications.

2. Crushed stone for base shall meet the gradation requirements for Size 7 or 8 as specified in ASTM D 448 or AASHTO M43.

2.02 Form Material

A. Forms may be constructed of wood or metal.

B. The lumber to be used in the construction of wood forms shall be free of bulge or warp, of uniform width, not less than 2-inches (commercial) in thickness, except that 1-inch thickness may be used on curves and shall be sound and free from loose knots. Stakes shall be not less than 2 x 4-inch lumber of sufficient length that, when driven, they will hold the forms rigidly in place.

C. Metal forms shall be of approved sections and shall have a flat surface on top. They shall present a smooth surface of the desired contour, sufficiently thick and braced to withstand the weight of the concrete without bulging or becoming displaced.

Part 3 Execution

3.01 Labor

For finishing, competent and skilled finishers shall be provided.

3.02 Equipment

A. All equipment necessary and required for the construction of concrete sidewalks and driveways, must be on the Project, proven to be in first class working condition and approved by the Engineer, before construction will be permitted to begin.

B. A one bag mixer will be permitted when the total output of concrete, per 10 hour day, does not exceed 25 cubic yards.

C. Satisfactory floats, edgers, spades and tamps shall be furnished. Tamps of not over 8-inch diameter and weighing not less than 25 pounds shall be provided for tamping subgrade. A 10 foot longitudinal float of the inverted T-type with plough handles attached for manipulation, and a rigid float not less than 18-inches longer than the width of the walk being constructed, shall be provided.

3.03 Clearing and Grubbing

Clearing and grubbing shall be performed in accordance with the requirements of Section 02200 of these Specifications.

3.04 Removal of Structures and Obstructions

Unless otherwise indicated or stipulated, the removal of structures, obstructions, etc., will be performed in accordance with the requirements of Section 02060 of these Specifications.

3.05 Road and Drainage Excavation

Road and drainage excavation, as indicated on the Drawings or as directed by the Engineer, shall be performed in accordance with the requirements of Section 02200 of these Specifications.

3.06 Embankment Construction

Embankment construction, as indicated on the Drawings or as directed by the Engineer, shall be performed in accordance with the provisions of Section 02200 of these Specifications.

3.07 Subgrade Preparation

A. The subgrade for sidewalks and driveways shall be formed by excavation to a depth

equal to the thickness of the concrete +2-inches.

B. All subgrade shall be of such width as to permit the proper installation and bracing of the forms.

C. Yielding, or unsuitable material shall be removed and backfilled with satisfactory material. Place 6-inches of graded aggregate base under commercial/industrial driveways, compacted thoroughly and finished to a smooth, unyielding surface and proper line, grade and cross section of the proposed construction.

3.08 Forms

A. All forms shall be set upon the prepared subgrade, true to lines and grade, and held rigidly in place so as not to be disturbed or displaced during the placing of the concrete. The top of the form shall be set to exact grade and the height shall be equal to not less than the thickness of the proposed concrete.

B. All forms shall be so constructed as to form the cross section, contour, etc., of the proposed construction.

C. Immediately before placing the concrete, the forms shall be given a coat of light oil and where being removed and used again, the forms shall be thoroughly cleaned and oiled each time.

D. Forms shall be removed within 24 hours after placing concrete and no pressure shall be exerted upon the concrete in removing forms.

E. When the sidewalk is to be joined to an existing sidewalk, the existing sidewalk, if not in proper condition for the junction, shall be cut to a neat line perpendicular to both the centerline and the surface, or as indicated by the Engineer.

3.09 Expansion Joints

[] A. Unless otherwise indicated on the Drawings or as directed by the Engineer, premoulded expansion joint filler, 1/2-inch in thickness, shall be placed at the locations and in line with expansion joints in the adjoining pavement, gutter or curb. When expansion joints are not required in the adjoining pavement or gutter, and not otherwise indicated on the Drawings, a 1/2-inch premoulded expansion joint filler shall be placed at intervals of not over 50 feet apart. All premoulded expansion joint filler must be cut to full width or length of the proposed construction and shall extend to within 1/2-inch of the top or finished surface. All longitudinal expansion joints shall be placed [as indicated on the Drawings or] as directed by the Engineer.

B. All expansion joints shall be true, even and present a satisfactory appearance.

C. All expansion joint material protruding after the concrete has been finished shall be trimmed as directed by the Engineer.

3.10 Manufacturing and Placing Concrete

A. Immediately before placing concrete, the depth of the proposed concrete shall be checked by means of a template cut true to the cross section of the proposed construction and any irregularities shall be corrected.

B. Immediately before placing concrete, all subgrade shall be thoroughly sprinkled or wetted.

C. Concrete shall not be placed upon a frozen subgrade or subbase.

D. Construction joints will be permitted only at grooves or at expansion joints, unless otherwise approved by the Engineer.

E. The concrete shall be manufactured and placed in accordance with the requirements of Section 03300 of these Specifications.

F. The concrete shall be placed immediately after mixing; the edges, sides, etc., shall be thoroughly spaded and the surfaces tamped sufficiently to thoroughly compact the concrete and bring the mortar to the surface. The concrete shall be deposited and compacted in a single layer.

3.11 Finishing

A. The concrete shall be struck-off with a transverse template resting upon the side forms and then shall be floated with a 10 foot longitudinal float working the float transversely across the concrete with a sawing motion, always maintaining it parallel to the edges of the sidewalk, or driveway, where practicable, and in such a manner that all surplus water, laitance and inert material shall be removed from the surface. This operation shall be continued until the surface of the concrete shows no variation from a 10 foot straightedge. If necessary, additional concrete shall be added to fill depressions, and the longitudinal float used again. The longitudinal float shall not be moved ahead more than one-half its length at any time.

B. When the surface of the concrete is free from water and just before the concrete obtains its initial set, it shall be gone over and finished with a wooden float so as to produce a sandy texture. The longitudinal surface variations shall be not more than 1/4-inch under a 12 foot straightedge, nor more than 1/8-inch on a five foot transverse section. The surface of the concrete must be finished so as to drain completely at all times.

C. The edges of the sidewalks or driveways shall be carefully finished and rounded with an edging tool having a radius of 1/2-inch.

D. The surface of sidewalks shall be divided into blocks by use of a grooving tool. Grooves shall be placed so as to cause contraction joints to be placed at a groove line, where practical. The grooves shall be spaced approximately five feet apart and the blocks shall be rectangular unless otherwise ordered by the Engineer. The grooves

shall be cut to a depth of not less than 1-inch. The edges of the groves shall be edged with an edging tool having a radius of 1/4-inch, and any marks caused by edging or otherwise shall be removed with a wetted brush or wooden float so as to give the surface a uniform texture and finish.

E. The edges of the concrete at contraction joints shall be rounded with an edging tool having a radius of 1/4-inch. The top and ends, where practicable, of expansion joint material shall be cleaned of all concrete and the expansion joint material shall be trimmed so as to be slightly below the surface of the concrete. All marks caused by edging shall be removed with a wetted brush or wooden float.

3.12 Protection and Curing

A. Immediately after finishing the concrete, it shall be covered and cured in accordance with the requirements of Section 03300 of these Specifications. If the temperature falls to below freezing, satisfactory heating devices shall be placed under suitable covers to keep the temperature around the concrete at above 45 degrees F.

B. Pedestrians will not be allowed upon concrete sidewalks or driveways until 12 hours after finishing concrete, and no vehicles or loads shall be permitted upon any sidewalk or driveway until the concrete has attained sufficient strength for such traffic.

C. The Contractor shall construct such barricades and protection devices as are necessary to keep pedestrians and traffic off the sidewalks or driveways.

D. If any sidewalk or driveway is damaged at any time previous to final acceptance of the project, it shall be repaired by removing all concrete within the limits of the grooves, and be replaced, at the Contractor's expense, with concrete of the type, kind and finish in the original construction.

3.13 Backfilling

Immediately after the concrete has set sufficiently, the spaces along the sides or edges of the sidewalk or driveway shall be refilled with suitable material, this material shall be compacted in layers of not over 4-inches each, until firm and solid.

3.14 Cleaning

A. All excess or unsuitable material shall be removed and disposed of in accordance with requirements of Section 02228 of these Specifications.

B. Final clean-up shall be performed in accordance with the requirements of Section 01710 of these Specifications.

C. All material becoming the property of the Owner shall be stored in a manner and at locations near or on the Project as directed by the Engineer.

END OF SECTION

Part 1 General

1.01 Scope

The work covered by this Section includes furnishing all labor, equipment and materials required to install brick, cast-in-place, and/or precast concrete manholes and junction chambers as described herein and/or shown on the Drawings.

1.02 Design Requirements

A. Manholes shall be constructed of specified materials to the sizes, shapes and dimensions and at the locations shown on the Drawings or as otherwise directed by the Engineer.

B. Where the difference in the invert elevation of a sewer 18-inches in diameter or smaller and any other sewer intersecting in one manhole is two feet or more, a drop manhole shall be constructed as shown on the Drawings.

1.03 Submittals

Complete shop drawings, product data and engineering data shall be submitted to the Engineer in accordance with the requirements of Section 01340 of these Specifications.

1.04 Quality Assurance

A. Product manufacturers shall provide Engineer with written certification that all products furnished comply with all applicable provisions of these Specifications. All materials which fail to conform to these Specifications shall be rejected.

B. After delivery to the site, any materials which have been damaged in transit or are otherwise unsuitable for use in the work shall be rejected and removed from the site.

Part 2 Products

2.01 Manholes and Precast Concrete Products

A. Precast Concrete Sections

1. Precast concrete sections shall meet the requirements of ASTM C 478. The minimum compressive strength of the concrete in precast sections shall be 4,000 psi.

2. The minimum wall thickness shall be one-twelfth of the inside diameter of the base, riser or the largest cone diameter. Additionally, the wall thickness shall be sufficient for the proper installation of the rubber boots. Wall thickness shall be as shown on the Drawings.

3. Transition slabs which convert bases larger than four feet in diameter to four foot diameter risers shall be designed by the manhole manufacturer to carry the live and dead loads exerted on the slab.

4. Seal joints between precast sections by means of rubber O-ring gaskets or flexible butyl rubber sealant. Butyl rubber sealants shall meet the requirements of AASHTO M-198. Sealant shall be pre-formed type with a minimum nominal diameter of 1-inch. Butyl rubber sealant shall be equal to Kent Seal No. 2 or Concrete Sealants CS202.

B. Brick and Mortar: Brick shall be whole and hardburned, conforming to ASTM C 32 Grade MS. Mortar shall be made of one part Portland cement and two parts clean sharp sand. Cement shall be Type 1 and shall conform to ASTM C 150. Sand shall meet ASTM C 144.

C. Pipe Tee Manholes: Concrete pipe tees shall meet the requirements of the pipe in which it is used. Steel reinforcement in the riser shall be securely welded to steel in line pipe before concrete fill is begun. The remainder of the manhole shall be as specified for precast concrete sections.

D. Iron Castings

1. Cast iron manhole frames, covers and steps shall meet the requirements of ASTM A 48 for Class 30 gray iron and all applicable local standards. All castings shall be tough, close grained, smooth and free from blow holes, blisters, shrinkage, strains, cracks, cold shots and other imperfections. No casting will be accepted which weighs less than 95 percent of the design weight. Shop drawings must indicate the design weight and provide sufficient dimensions to permit checking. All castings shall be thoroughly cleaned in the shop and given two coats of approved bituminous paint before rusting begins.

2. Manhole frames and covers shall be equal to the following:

Type	Design Weight	Manufacturer's Reference	
Standard	270#	Neenah R-1695	Vulcan V-1349
Traffic	400#	Neenah R-1642	Vulcan V-1349
Watertight	400#	Neenah R-1916-F1	Vulcan V-2358

3. All frames and covers shall have machined horizontal bearing surfaces.

4. All manholes shall have watertight frames and covers except where specifically shown otherwise on the Drawings.

5. Watertight covers shall be bolt-down type and shall be equipped with four 1/2-inch stainless steel bolts and a 1/8-inch red rubber or rubber O-ring gasket. Covers shall be rotatable and interchangeable. Bolt holes shall be bored through so that debris entering the bolt hole will fall into the manhole. Bolt holes shall

have the full 360 degree circle within the cover's radius when bored through the cover.

E. Plastic Steps: Manhole steps of polypropylene molded around a steel rod equal to products of M.A. Industries may be used.

F. Rubber Boots: Provide preformed rubber boots and fasteners equal to those manufactured by Kor-N-Seal or Press Seal Gasket Corporation.

Part 3 Execution

3.01 Construction of Precast Concrete Manholes

A. Handle sections carefully to prevent cracking or chipping. Provide joint sealants in accordance with manufacturer's recommendations to produce a watertight structure.

B. After placing manhole base, inverts shall be constructed in accordance with details on the Drawings. The manhole invert shall be carefully formed to the required size and grade by gradual and even changes in sections.

C. After the base section has been set, and inverts formed, the precast manhole sections shall be placed thereon, care being exercised to form the incoming and outgoing sewer pipes into the wall of the manhole at the required elevations.

D. The cast iron frame for the manhole cover shall be set at the required elevation and properly anchored to the masonry. Where manholes are constructed in paved areas, the top surface of the frame and cover shall be tilted to conform to the exact slope, crown and grade of the existing adjacent pavement. Unless frame and cover is at grade, the frame shall be cast into the cone section.

E. Masonry work shall be allowed to set for a period of not less than 24 hours. Outside forms, if any, then shall be removed and the manhole backfilled and compacted. All loose or waste material shall be removed from the interior of the manhole. The manhole cover then shall be placed and the surface in the vicinity of the work cleaned off and left in a neat and orderly condition.

F. All pipes shall be connected to precast concrete manholes by a rubber boot provided in a cored or precast hole of the proper diameter.

G. Seal all manhole joints and lift holes, both inside and out, with grout. Between precast sections, this is in addition to joint sealant.

3.02 Construction of Precast Concrete Tee Manhole Bases

A. Precast concrete tee manhole bases and elbows shall conform to the requirements of Section 02610 of these Specifications. Class of pipe used shall be the same as that used in the line adjacent to the manhole and elbow. The tee section shall be carefully formed to the required size. The inside of the base shall be left smooth with no rough projections where the tee is connected to the pipe. Backfill the concrete tee prior to

placing any riser sections.

B. Elbows where required shall be fabricated to a true angle as shown on the Drawings. Elbows shall be made smooth by hand troweling and the finish surface shall be equal to that in the rest of the pipe.

C. All fabrication work on the manhole base and elbows shall be performed by the manhole or pipe manufacturer at the plant. No field fabrication will be permitted without specific authorization of the Engineer.

D. After the base section has been installed, the precast manhole sections shall be placed thereon.

E. Frame and Cover: Unless frame and cover is at grade, the frame shall be cast into the core section.

F. Concrete, setting time, backfill, brickwork, setting frame and cover, temporary paving, etc., shall be in accordance with the applicable requirements of Article 3.01 of this Section.

3.03 Manhole Construction

A. Construct manholes as shown on the Drawings.

B. Pipe Connections: Seal the void between the pipe and the manhole with brick and mortar on both the inside and outside.

1. Pipe 36-Inch Diameter and Less: Connect pipe to manhole utilizing rubber boots.

2. If preformed openings must be enlarged or altered, or if new openings must be made in the field, minimize the amount of material removed to provide closely matched surfaces for grouting.

C. Inverts: Form channels as shown on the Drawings, rounded, and troweled smooth. Maintain consistent grade through the invert.

D. Top Elevations: Build manholes outside of paved areas to 18-inches above finished grade unless otherwise shown on the Drawings or directed by the Engineer. Build manholes in paved areas to existing grades.

E. Drop Connections: Manholes requiring drop connections are shown on the Drawings. Construct drop connections of the same materials as the upstream sewer and in accordance with the details shown on the Drawings.

F. Frames and Covers: Unless frame and cover is at grade, the frame shall be cast into the cone section.

G. Invert Elevations: The invert elevations shown on the Drawings shall be for the invert

at the centerline of the precast concrete manhole. Prior to setting the laser or other vertical alignment control system for the sewer upstream of the manhole, the Contractor shall verify the elevation of the sewer installed at the manhole. Should the elevation differ from that shown on the Drawings, the Contractor shall take the following corrective action:

1. If the sewer is laid at negative grade, the Contractor shall remove and reinstall the sewer at the correct grade at no additional cost to the Owner.

2. If the sewer is laid at a grade less than that shown on the Drawings, thus reducing the sewer's capacity, the Owner may require the sewer to be removed and relaid at the correct grade at no additional cost to the Owner. As a minimum, the grade to the next upstream manhole shall be adjusted such that the next upstream manhole shall be set at the correct elevation.

3. If the sewer is laid at a grade greater than that shown on the Drawings, and if the Contractor can show that there are no conflicts with upstream existing utilities or obstructions, the Contractor shall adjust the grade of the next upstream manhole such that the next upstream manhole shall be set at the correct elevation. If such an adjustment, in the Engineer's opinion, is substantial, the grade adjustment shall be spread over multiple sections of the sewer. If such an adjustment, in the Owner's opinion, significantly reduces the sewer's capacity, the Owner may require the Contractor to remove and relay that portion of the sewer laid at the improper grade.

H. Manholes shall be constructed such that their walls are plumb.

3.04 Inspection and Testing

A. Clean and test manholes before requesting final acceptance. When requested by the Engineer, flush out manholes before final inspection.

B. Manholes: Prior to testing manholes for watertightness, all liftholes shall be plugged with a non-shrink grout, all joints between precast sections shall be properly sealed and all pipe openings shall be temporarily plugged and properly braced. Each manhole shall pass one of the following tests:

1. Exfiltration Tests: The manhole, after proper preparation as noted above, shall be filled with water. The maximum allowable leakage shall be eight gallons per foot of depth per 24 hours for 48-inch diameter manholes. Tests shall last a minimum of eight hours. The manholes may be backfilled prior to testing.

2. Vacuum Tests: The manhole, after proper preparation as noted above, shall be vacuum tested prior to backfilling. The test head shall be placed at the inside of the top of the cone section and the compression head inflated to 40 psi to effect a seal between the vacuum base and the manhole structure. Connect the vacuum pump to the outlet port with the valve open. A vacuum of 10-inches of mercury shall be drawn and the vacuum pump shut off. With the valves closed, the time shall be measured for the vacuum to drop to 9-inches. The manhole shall pass if

the time is greater than 60 seconds for 48-inch diameter manholes. If the manhole fails the initial test, necessary repairs shall be made with non-shrink grout while the vacuum is still being drawn. Retesting shall proceed until a satisfactory test is obtained. Vacuum testing equipment shall be equal to that as manufactured by P.A. Glazier, Inc.

END OF SECTION

Part 1 General

1.01 Scope

This Section shall consist of resetting manhole frames and furnishing all materials and labor necessary to bring them to the locations and grades as shown on the Drawings or as designated by the Engineer.

Part 2 Products

2.01 Materials

A. Concrete or mortar shall be Class “A”. Mortar shall be one part Portland cement and two parts sand. Concrete materials shall comply with Section 03300 of these Specifications.

B. Brick shall conform to ASTM C 32, Grade SM. Sand for mortar shall conform to ASTM C 144. Hydrated lime shall conform to ASTM C 6.

C. Backfill material shall conform to the existing material in the subgrade of base course and thoroughly tamped in place until no further displacement occurs.

Part 3 Execution

3.01 Excavation

Excavation shall be performed wherever necessary to bring the manhole to grade as shown on the Drawings and as designated by the Engineer.

3.02 Resetting

A. All manhole frames shall be reset in accordance with these Specifications when the existing manhole is more than 0.025-inch over or under the grade shown on the Drawings for the finished pavement or construction. They shall be accurately set to line and grade by removing the frame and cover grating and raising or lowering the masonry top of the structure and resetting on a cushion of cement mortar.

B. In the event that a manhole frame is to be raised or lowered more than three brick courses, the corbeled part of the brick structure shall be removed and the brick structure rebuilt in accordance with the standard manhole details and Section 02607 of these Specifications for new manholes.

3.03 Cleaning

All manholes shall be thoroughly cleaned of all excess mortar and accumulations of silt, clay, debris or foreign matter of any kind and shall be free from such at the time pavement is to be laid.

END OF SECTION

Part 1 General

1.01 Scope

A. Provide all labor, materials, equipment, and incidentals necessary to construct and disinfect all piping and appurtenances located outside the buildings and structures and test as shown on the Drawings and as specified herein.

B. Site piping covered under this Section shall begin at the outside face of structures and buildings, except where there is no joint at the outside face, then site piping shall begin not more than two feet beyond the face of the structure or building.

C. Site piping shall include all aerial piping.

1.02 Submittals

A. Complete product data on all piping and accessories shall be submitted to the Engineer in accordance with the requirements of Section 01340 of these Specifications.

B. Shop drawings shall indicate piping layout in plan and/or elevations and shall include a complete schedule of all pipe, fittings, specials, hangers and supports. Special castings shall be clearly detailed showing all pertinent dimensions. Special coatings shall be clearly identified.

C. The Contractor shall furnish the Inspector with lists of all pieces of pipe and fittings in each shipment received. These lists shall give the serial or mark number, weight, class, size and description of each item received.

D. The Contractor shall submit written evidence to the Engineer that the products furnished under this Section will conform with the material and mechanical requirements specified herein. Certified copies of independent laboratory test results or mill test results from the pipe supplier may be considered evidence of compliance provided such tests are performed in accordance with the appropriate testing standards by experienced, competent personnel. In case of doubt as to the accuracy or adequacy of mill tests, the Engineer may require that the Contractor furnish test reports from an independent testing laboratory on samples of pipe materials.

1.03 Quality Assurance

If ordered by the Engineer, each pipe manufacturer shall furnish the services of a competent factory representative to supervise and/or inspect the installation of pipe. This service will be furnished for a minimum of five days during initial pipe installation.

Part 2 Products

2.01 Ductile Iron Pipe (DIP)

Ductile iron pipe, fittings, and accessories shall be as specified in Part 2 of Section 15062 of these Specifications.

2.02 Polyvinyl Chloride (PVC) Pressure Pipe

Polyvinyl chloride pressure pipe shall be as specified in Part 2 of Section 15069 of these Specifications.

Part 3 Execution

3.01 Existing Underground Utilities and Obstructions

A. The Drawings indicate utilities or obstructions that are known to exist according to the best information available to the Owner. The Contractor shall call the Utilities Protection Center (UPC) (325-5000 or 1-800-282-7411) as required by Georgia law (Code Section 25-9-1 through 25-9-13) and all utilities, agencies or departments that own and/or operate utilities in the vicinity of the construction work site at least 72 hours (three business days) prior to construction to verify the location of the existing utilities.

B. Existing Utility Location: The following steps shall be exercised to avoid interruption of existing utility service.

1. Provide the required notice to the utility owners and allow them to locate their facilities according to Georgia law. Field utility locations are valid for only 10 days after original notice. The Contractor shall ensure, at the time of any excavation that a valid utility location exists at the point of excavation.

2. Expose the facility, for a distance of at least 200 feet in advance of pipeline construction, to verify its true location and grade. Repair, or have repaired, any damage to utilities resulting from locating or exposing their true location.

3. Avoid utility damage and interruption by protection with means or methods recommended by the utility owner.

4. Maintain a log identifying when phone calls were made, who was called, area for which utility relocation was requested and work order number issued, if any. The Contractor shall provide the Engineer an updated copy of the log bi-weekly, or more frequently if required.

C. Conflict with Existing Utilities

1. Horizontal Conflict: Horizontal conflict shall be defined as when the actual horizontal separation between a utility, main, or service and the proposed piping does not permit safe installation of the piping by the use of sheeting, shoring,

tying-back, supporting, or temporarily suspending service of the parallel or crossing facility. The Contractor may change the proposed alignment of the piping to avoid horizontal conflicts if the new alignment remains within the available right-of-way or easement, complies with regulatory agency requirements and after a written request to and subsequent approval by the Engineer. Where such relocation of the piping is denied by the Engineer, the Contractor shall arrange to have the utility, main, or service relocated.

2. Vertical Conflict: Vertical conflict shall be defined as when the actual vertical separation between a utility, main, or service and the proposed piping does not permit the crossing without immediate or potential future damage to the utility, main, service, or the piping. The Contractor may change the proposed grade of the piping to avoid vertical conflicts if the changed grade maintains adequate cover and complies with regulatory agencies requirements after written request to and subsequent approval by the Engineer. Where such relocation of the piping is denied by the Engineer, the Contractor shall arrange to have the utility, main, or service relocated.

D. Electronic Locator: Have available at all times an electronic pipe locator and a magnetic locator, in good working order, to aid in locating existing pipe lines or other obstructions.

3.02 Location and Grade

A. The Drawings show the alignment and grade of the piping and the location of other appurtenances.

B. Prior to clearing and grubbing, construction staking shall conform to the requirements of Article SC-4 of the Special Conditions.

3.03 Laying and Pipe Assembly

A. Installation

1. Proper implements, tools and facilities shall be provided for the safe performance of the work. All pipe, fittings, valves and hydrants shall be lowered carefully into the trench by means of slings, ropes or other suitable tools or equipment in such a manner as to prevent damage to piping materials and protective coatings and linings. Under no circumstances shall piping materials be dropped or dumped into the trench.

2. All pipe, fittings, valves and other appurtenances shall be examined carefully for damage and other defects immediately before installation. Defective materials shall be marked and held for inspection by the Engineer, who may prescribe corrective repairs or reject the materials.

3. All lumps, blisters and excess coating shall be removed from the socket and plain ends of each pipe, and the outside of the plain end and the inside of the bell shall be wiped clean and dry and free from dirt, sand, grit or any foreign materials before the pipe is laid. No pipe containing dirt shall be laid.

4. Foreign material shall be prevented from entering the pipe while it is being placed in the trench. No debris, tools, clothing or other materials shall be placed in the pipe at any time.

5. As each length of pipe is placed in the trench, the joint shall be assembled and the pipe brought to correct line and grade. The pipe shall be secured in place with approved backfill material.

6. Applying pressure to the top of the pipe, such as with a backhoe bucket, to lower the pipe to the proper elevation or grade, shall not be permitted.

7. Provide detection tape for all non-metallic pressure pipe. Detection tape shall be buried 4 to 10-inches deep. Should detection tape need to be installed deeper, the Contractor shall provide 3-inch wide tape. In no case shall detection tape be buried greater than 20-inches from the finish grade surface.

B. Alignment and Gradient

1. Lay pipe straight in alignment and gradient or follow true curves as nearly as practicable. Do not deflect any joint more than the maximum deflection recommended by the manufacturer.

2. Maintain a transit, level and accessories on the job to lay out angles and ensure that deflection allowances are not exceeded.

3. The Contractor shall check the invert elevation for gravity sewer or drain pipe at each manhole at least three times daily, start, mid-day and end of day. Elevations shall be checked more frequently if more than 100 feet of pipe is installed in a day or if the pipe is being constructed at minimum slope.

4. The Contractor shall check the horizontal alignment of the pipeline at the same schedule as for invert elevations.

C. Expediting of Work: Excavate, lay the pipe, and backfill as closely together as possible. Do not leave unjointed pipe in the trench overnight. Backfill and compact the trench as soon as possible after laying and jointing is completed. Cover the exposed end of the installed pipe each day at the close of work and at all other times when work is not in progress. If necessary to backfill over the end of an uncompleted pipe or accessory, close the end with a suitable plug, either push-on, mechanical joint, restrained joint or as approved by the Engineer.

D. Joint Assembly

1. Push-on, mechanical, flange and restrained type joints shall be assembled in accordance with the manufacturer's recommendations.

2. Each restrained joint shall be inspected by the Contractor to ensure that it has been “homed” 100 percent.

3. The Contractor shall internally inspect each pipe joint to insure proper assembly for pipe 24-inches in diameter and larger after the pipe has been brought to final alignment.

4. Field welding of steel pipe joints shall conform to the requirements of AWWA C206. All welding shall be performed by persons meeting the qualification requirements of ANSI/AWS D1.1.

E. Cutting Pipe: Cut ductile iron pipe using an abrasive wheel saw. Cut PVC pipe using a suitable saw; remove all burrs and smooth the end before jointing. The Contractor shall cut the pipe and bevel the end, as necessary, to provide the correct length of pipe necessary for installing the fittings, valves, accessories and closure pieces in the correct location. Only push-on or mechanical joint pipe shall be cut.

F. Lining Repair: Repair polyethylene or polyurethane linings and recoat spigot ends of cut pipe with a product equal to Protecto 101 or Madewell 1104 coal tar epoxy in accordance with the manufacturer's recommendations and as specified below:

1. Remove all burrs and areas of loose lining materials by sanding or scraping to bare metal.

2. Remove oil and lubricants used during field cutting.

3. Lining shall be stripped back a minimum of 1-inch from the spigot end into well adhered lined areas.

4. Roughen 1 to 2-inches of good lining with a rough grade (40 grit) emery paper, rasp or small chisel, to allow an overlap between new and existing lining.

5. Apply lining repair material in the number of coats required to match the thickness requirements as specified in Part 2 of this Section and in accordance with the manufacturer's recommendations.

3.04 Connections to Existing Piping

A. Make connections to existing pipe lines as shown on the Drawings.

B. Location: Before laying pipe, locate the points of connection to existing piping and uncover as necessary for the Engineer to confirm the nature of the connection to be made.

C. Interruption of Services: Make connections to existing piping only when system operations permit. Operate existing valves only with the specific authorization and direct supervision of the Owner.

D. Tapping Saddles and Tapping Sleeves

1. Holes in the new pipe shall be machine cut, either in the field or at the factory. No torch cutting of holes shall be permitted.

2. Prior to attaching the saddle or sleeve, the pipe shall be thoroughly cleaned, utilizing a brush and rag, as required.

3. Before performing field machine cut, the watertightness of the saddle or sleeve assembly shall be pressure tested. The interior of the assembly shall be filled with water. An air compressor shall be attached, which will induce a test pressure as specified in this Section. No leakage shall be permitted for a period of five minutes.

4. After attaching the saddle or sleeve to existing piping, but prior to making the tap, the interior of the assembly shall be disinfected. All surfaces to be exposed to potable water shall be swabbed or sprayed with a one percent hypochlorite solution.

E. Connections Using Solid Sleeves: Where solid sleeves are shown on the Drawings, the Contractor shall furnish materials and labor necessary to make the connection using a solid sleeve to the existing pipe line.

F. Connections Using Flange Filler: Flange filler shall be used only where shown on the Drawings or approved by the Engineer to make up minor differences in pipe length less than 3-inches. Joint bolt length shall be increased by the thickness of the flange filler.

G. Connections Using Mechanical Pipe Couplings: Where pipe couplings are shown on the Drawings, the Contractor shall furnish materials and labor necessary to make the connection using a pipe coupling to the existing pipe line, including all necessary cutting, plugging and backfill.

H. Connections to Pressure Mains

1. Connections to ductile iron pipe pressure mains shall be by the direct tap method or service clamp, as detailed on the Drawings in full accordance with AWWA requirements.

2. Connections to polyvinyl chloride pipe shall be made using a full body service clamp.

3. Pressure ratings for connections shall be the same as the pressure rating for the pipe.

3.05 Thrust Restraint

A. Provide restraint at all points where hydraulic thrust may develop.

B. Retainer Glands: Provide retainer glands where shown on the Drawings and all associated fittings, valves and related piping. Retainer glands shall be installed in accordance with the manufacturer's recommendations, particularly, the required torque of the set screws. The Contractor shall furnish a torque wrench to verify the torque on all set screws which do not have inherent torque indicators.

C. Harnessing

1. Provide harness rods only where specifically shown on the Drawings or directed by the Engineer.

2. Where possible, harness rods shall be installed through the mechanical joint bolt holes. Where it is not possible, provide 90 degree bend eye bolts.

D. Concrete Blocking

1. Where shown on the Drawings, provide concrete blocking for all bends, tees, valves, and other points where thrust may develop, except where other exclusive means of thrust restraint are specifically shown on the Drawings.

2. Concrete shall be as specified in Section 03300 of these Specifications.

3. Form and pour concrete blocking at fittings as shown on the Drawings and as directed by the Engineer. Pour blocking against undisturbed earth. Increase dimensions when required by over excavation.

3.06 Inspection and Testing

All pressure and leakage testing shall be performed in accordance with the requirements of Section 02666 of these Specifications.

3.07 Disinfection

All potable water lines shall be disinfected in accordance with Section 02675 of these Specifications.

END OF SECTION

Part 1 General

1.01 Scope

A. Furnish all labor, materials, tools, equipment and related items required to perform tests of gravity pipelines and perform integrity and leakage tests of pressure and vacuum piping.

B. The testing requirements covered under this Section shall apply to all piping systems covered under Sections 02610 and 15069 of these Specifications.

1.02 Submittals

Submittals shall conform to the requirements of Section 01340 of these Specifications and shall include a description of the testing procedures to be employed and the report form to be furnished.

Part 2 Products

2.01 Test Mediums

The Owner will provide the necessary water required for testing the work. The Contractor shall furnish all other test mediums. The Contractor shall furnish all equipment, necessary piping and required labor to transport water from its source to the test location for use in testing.

2.02 Test Equipment

The Contractor shall furnish all labor and equipment, including required pumps with regulated bypass meters and gauges, for conducting of the piping tests.

Part 3 Execution

3.01 General

A. The entire length of all pressurized piping and gravity lines shall be field tested for tightness by a test as described in this Section.

B. The timing and sequence of testing shall be scheduled by the Contractor, subject to the approval of the Engineer. The Contractor shall provide the Engineer with a minimum of 24 hours notice prior to the start of any test. All tests must be observed by the Engineer.

C. The Contractor shall repair any leaks discovered during the initial filling of the piping and during the testing sequence. All known and visible leaks shall be repaired, whether or not the leakage rate is within allowable limits.

3.02 Major Piping

A. All piping shall be tested in accordance with Article 3.03. This shall include chemical lines and potable and non-potable water lines, whether cast iron, ductile iron, steel, copper or PVC.

B. Clean and test lines before requesting final acceptance. Where any obstruction is met, clean the lines by means of rods, swabs, or other instruments. When requested by the Engineer, flush out lines and manholes before final inspection.

3.03 Miscellaneous Piping

A. Upon completion of each piping system or sub-system, blow the lines free of dirt and debris and test in the presence of the Engineer. Wherever possible, test before the trench is backfilled. Drain piping shall be tested prior to encasement in concrete. The minimum test duration shall be one hour. The pipeline shall fail the test if a measurable pressure drop is observed. Unless specified otherwise in Divisions 2 through 17 of these Specifications, test in accordance with the following requirements:

System	Test Medium	Test Pressure	Pipe Material
Liquid Feed Lines			
Potable/Non-Potable Water	Water	150 psi	PVC/CPVC
SHCLR	Water	60 psi	PVC
Hydraulic Tubing	Service Fluid	50 psi above operating	All

B. Repair and retest any piping system found to be leaking until results are satisfactory to the Engineer.

C. For chemical feed lines that will convey chemicals that react adversely with water, piping shall be purged with nitrogen gas to remove all water before piping is placed in service.

3.07 Repairs

If the leakage exceeds the specified allowable limits, the point or points of leakage shall be sought out and remedied by the Contractor at no additional cost to the Owner. Repair methods must be approved by the Engineer.

3.08 Flushing and Cleaning

The systems shall not be used, except for chemical cleaning, until the Engineer has been assured that cleaning has been accomplished.

3.09 Final Acceptance

A. No pipeline installation shall be accepted until all known and visible leaks have been repaired, whether or not the leakage is within the maximum allowable limits.

B. The Contractor will certify that all required tests have been successfully completed before the work is accepted.

END OF SECTION

Part 1 General

1.01 Scope

A. The work covered by this Section includes furnishing all labor, equipment, materials and chemicals required to disinfect all potable water facilities in accordance with the procedures specified herein.

B. Upon completion of the construction and installation of equipment, the Contractor shall sterilize all plant units, piping, pumps, wells and connections thereto, all distribution system piping and storage tanks and any surfaces that shall be in contact with potable water.

1.02 Standards

Procedures for disinfecting water mains, water storage facilities, wells and water treatment plants, unless otherwise modified herein, shall conform to the requirements of AWWA Standards C651, C652, C653 and C654.

Part 2 Products

2.01 Disinfection Agent

The disinfection agent shall be free chlorine or chlorine compound. The method of application and type of disinfecting agent shall both be acceptable to the Engineer.

Part 3 Execution

3.01 Disinfection Procedure

A. Prior to disinfection, all surfaces shall be thoroughly flushed with clear water after all debris and dirt has been removed.

B. Disinfection shall be accomplished by the application of clear water containing a minimum of 50 parts per million (ppm) of available chlorine: in new lines at least 25 ppm free chlorine shall be applied. The chlorine bearing water shall remain in contact with the surfaces being sterilized for a period of not less than 24 hours. At the end of the contact period the chlorine residual in all units and at extremities of pipe lines and other representative points shall be at least 25 ppm.

C. In the process of chlorinating newly constructed units and newly installed pipe, all valves or other appurtenances shall be operated at least five times while the units and pipelines are filled with the disinfection agent.

D. Upon completion of the disinfection procedure, reduce the chlorine residual of disinfection water to levels required for discharge per requirements of federal, state and local regulatory agencies. Treat water with sulfur dioxide or other reducing chemicals to neutralize chlorine residual. All units and piping shall be flushed with

potable water until the chlorine residual remaining is one part per million or less and the replacement water throughout the units, upon suitable bacteriological tests, has proved to be of acceptable quality and in conformance with the Florida Department of Health standards for municipal water supplies. This satisfactory quality of water shall continue for two full days as demonstrated by laboratory examination of samples taken from a tap located and installed in such a way as to prevent outside contamination.

E. No portion of new work shall be placed in service until disinfection has been completed and approved by the Engineer. Should the initial treatment fail to result in acceptable water, the chlorination procedure shall be repeated until satisfactory results are obtained.

END OF SECTION

Part 1 General

1.01 Scope

This work shall consist of the construction of underdrains composed of stone, gravel, slag, sand or a combination of any one of these materials and perforated or semicircular drainpipe (with connections). They shall be constructed in accordance with these Specifications, on prepared foundations at the locations shown on the Drawings and in reasonably close conformity to the lines and grades indicated thereon, or as directed by the Engineer. The work shall include all necessary excavation and backfill together with such work and materials as may be necessary to make connections with other drainage structures as shown on the Drawings.

Part 2 Products

2.01 Materials

A. Materials used in this construction, in addition to meeting the general stipulations of these Specifications, shall meet the requirements below.

B. Pipe used for underdrains shall be as specified on the Drawings or as designated by the Engineer and shall meet the following:

1. Corrugated Metal Pipe: This pipe shall conform to AASHTO M36 for the specified diameters. Unless otherwise specified any of the types covered in AASHTO M36 may be used.

2. Corrugated Aluminum Pipe: This pipe shall conform to the requirements of AASHTO M197.

C. Crushed stone, crushed slag and washed gravel shall meet the following requirements:

1. Quality requirements of AASHTO M63 except that the sodium sulfate soundness loss shall not exceed nine percent. Crushed slag aggregate retained on the No. 4 sieve shall contain not more than 20 percent, by weight, of glassy particles.

2. The amount of material finer than 200 mesh shall not exceed one percent.

3. The aggregate for underdrain shall meet the gradation requirements for Size 7 or Size 8 ASTM D 448-54 or AASHTO M43-54.

D. Natural sand shall be washed and shall meet quality requirements of AASHTO M29 or ASTM D 1073-63. It shall have a gradation meeting the requirements for Size No. 9 of ASTM D 448-54 or AASHTO M43-54.

E. Pipe joint mortar shall consist of one part cement and two parts sand with water necessary to obtain the required consistency.

2.02 Kinds and Sizes of Underdrains

Underdrains shall be of the kinds specified. Unless otherwise specified, circular pipe for underdrains shall have a diameter of 6-inches. Semicircular pipe for underdrains shall have a diameter of 4-5/8-inches. In the case of the pipe, the size shall be understood to mean the nominal inside diameter.

Part 3 Execution

3.01 Equipment

All equipment necessary for the satisfactory performance of the work shall be on the Project and approved by the Engineer before construction will be permitted to begin.

3.02 Aggregate Underdrains

A. The trench to receive the aggregate shall be excavated at the locations shown on the Drawings or as directed by the Engineer. In case the size and dimensions are not shown, the trench shall be 12-inches wide at the bottom with sides flared at a rate of about 3-inches per 12-inches in depth. The trench shall be deep enough to intercept the water-bearing strata and in no case shall it be less than 16-inches deep. The bottom of the trench shall be finished smooth and uniform.

B. Aggregate meeting the requirements of Article 2.01 B.1. of this Section shall be place in the trench in 6-inch layers to a depth of 12-inches. Each layer shall be well tamped with an approved tamp.

C. Suitable nonporous backfill material shall be placed in layers not exceeding 6-inches (loose measurement) and each layer thoroughly tamped to a density at least equal to that of the existing material adjacent to the trench.

3.03 Aggregate Underdrains (With Pipe)

A. The trench to receive the pipe shall be excavated at the locations shown on the Drawings, or as directed by the Engineer. In case the dimensions are not shown, the width of the trench shall be not less that the outside diameter of the pipe +12-inches. The trench shall be deep enough to intercept the water-bearing strata and to allow installation of the pipe and cover material, but in no case shall it be less than 16-inches deep. Unless otherwise shown on the Drawings, a 2-inch layer of aggregate shall be spread on the bottom of the trench, compacted and brought to uniform grade.

B. The pipe shall be embedded firmly in the layer of aggregate. Bell and spigot and tongue and groove pipe shall be laid with the bell and groove end upgrade and with the spigot or tongue fully entered into the adjoining bell or groove but not mortared unless indicated on the Drawings. Perforated pipe shall be laid with the flow sector and perforations at the bottom.

C. If an underdrain is extended through a dry fill or other section where perforated pipe is undesirable, it shall be constructed with the pipe specified and all joints shall be mortar joints, approved manufactured joints or made with connecting bands.

D. After the pipe has been laid and approved, the backfilling shall be carefully done so that the pipe will not become displaced. The backfilling around the pipe shall be with the aggregate specified. Unless otherwise designated on the Drawings or by special provision, the backfilling shall be 6-inches on each side of the pipe and 6-inches over the pipe. The aggregate around the pipe shall be thoroughly tamped with an approved tamp. The backfill above the aggregate shall be of suitable nonporous material placed in layers not exceeding 6-inches (loose measurement) and thoroughly compacted with mechanical tamp, hand tamp, or roller to a density at least equal to that of the existing material adjacent to the trench.

E. Dead ends of pipe underdrains shall be closed with a suitable plug of concrete placed over and around the end and held firmly in place.

F. Outlet ends of pipe underdrains shall be covered with screens of 1/2-inch openings. The screens are to be securely and satisfactorily attached to the end of the pipe. The outlet ends of pipe shall be marked for the benefit of proper maintenance.

G. Lateral and other connections shall be made where indicated on the Drawings or as directed by the Engineer.

3.04 Cleaning

All excess or unsuitable material shall be disposed of as directed by the Engineer. Final cleaning up shall be performed in accordance with the requirements of Section 01710 of these Specifications.

END OF SECTION

Part 1 General

1.01 Scope

The storm drainage system includes, but is not limited to, construction of storm sewers, drainage structures, drainage appurtenances, rip rap, ditching, backfilling, shoring and dewatering of trenches for storm sewers as required for safe and workmanlike construction.

1.02 Quality Assurance

A. Storm drain pipe may be inspected at the manufacturing source as well as at the job site by the Engineer.

B. The Contractor shall notify the Engineer for inspection of pipe and drainage structure installation prior to backfilling trenches.

C. Storm drainage systems serving public streets shall be constructed under the inspection of the owning governmental agency. Final acceptance of the governmental agency is required prior to final payment under this Contract.

1.03 Job Conditions

A Coordination and Scheduling of the Work: Construction of new sewers and drainage systems shall proceed as early in the construction program as possible. Maintain adequate drainage of the Project area at all times. Prevent flooding of adjacent roads and private properties.

B. Temporary Drainage: Wherever possible, new sewers and inlets to serve the various drainage areas shall be constructed and placed in service. Where this is not possible, temporary drainage facilities shall be provided as required. These may include temporary ditches, slope drains, temporary connections into completed sewers, or such other means as the circumstances may require.

Part 2 Products

2.01 Bedding Material

Drainage Fill Crushed Stone: Comply with ASTM C 33, Size No. 57.

2.02 Rip Rap

[] Rip rap shall comply with [Georgia Department of Transportation Standard].

2.03 Storm Drain Pipe Materials

A. Storm drain pipe is to be of the size and class as shown on the Drawings. Pipe shall be corrugated steel (CMP) as specified.

B. Corrugated steel pipe shall conform to AASHTO M36. Pipe shall be furnished with full bituminous coating and asphalt paved inverts conforming to the requirements of AASHTO M190 Specification. A positive means of identifying gauge shall be furnished. Corrugated steel pipe shall be furnished with corrugated bands and with joints equal to Armco “Hugger” type.

2.04 Appurtenance Material

A. Brick

1. Clay or Shale Brick: Comply with ASTM C 32 for sewer brick and manhole brick, grade as selected.

2. Concrete Masonry Units: Comply with ASTM C 139.

B. Mortar: Comply with ASTM C 270, Type M, for pipe joints and manhole and inlet brickwork.

C. Concrete for storm drainage construction shall be in accordance with the requirements of Section 03300 of these Specifications. Strength shall be 4,000 psi at age 28 days.

D. Reinforcement: Comply with ASTM A 615.

E. Castings: Comply with ASTM A 48, grey cast iron.

F. If the Contractor desires to substitute precast drainage structures for structure detailed on the Drawings, the Contractor shall submit design drawings to the Engineer for consideration. If precast structures are acceptable by the Engineer, shop drawings for construction will be required and shall conform to the requirements of Section 01340 of these Specifications.

Part 3 Execution

3.01 General

A. All pipe will be laid in an open trench of dimensions as given below. No projecting conditions will be allowed.

B. Lengths of storm drain pipe shown on the Drawings are approximate distances center to center of structures. Slopes are approximate. The Contractor shall install pipe based on actual field measurements after locating drainage structures in accordance with Drawing requirements.

C. Particular care shall be exercised in establishing the relationship of storm drain pipe, drainage structure bases and final drainage top conditions. Drainage structure tops are required to be located in specific position and orientation. Subsurface construction is to be located to allow drainage structure construction as detailed on the Drawings without modification. In case of misalignment of drainage structure tops and bases, the Contractor will be required to correct the construction as directed by the Engineer.

3.02 Excavation

A. Excavation shall be by open cut. The top portion of trenches may be excavated as required by the Contractor to any width which will not cause damage to any adjacent structure. The lower portion of the trench to a height of one foot above the top of the pipe shall not exceed the dimensions shown on the Drawings.

B. The bottom of trenches shall be carefully shaped to conform to and support the lower one-fourth of the periphery of the pipe barrel. Where rock is encountered, it shall be removed to a depth of 1 foot below the pipe and replaced with an approved soil material.

C. Where wet or otherwise unsuitable material is encountered at or below the invert elevation during excavation, it shall be removed to a point 12-inches below the pipe invert and replaced with selected fill. Where rock is encountered in storm drain trenches, it shall be undercut to a point 12-inches below the pipe invert and replaced with compacted earthfill.

3.03 Backfilling

Backfilling shall be done with selected material, free from rock larger than 2-inches in size and free of debris. Backfill shall be carefully placed and tamped around and over the pipe to avoid displacement of the pipe or damage to the joints. All backfill shall be placed in 6-inch lifts and shall meet material and compaction requirements of Section 02200 of these Specifications.

3.04 Appurtenances

A. All drainage structures are to be constructed as shown on the Drawings and in accordance with generally accepted construction practice. Refer to Drawings for location and size.

B. The Contractor shall furnish and install drainage structures as shown in detail on the Drawings.

C. Structure bottoms shall have shaped inverts.

D. All mortar joints shall be filled full. Joints shall be struck flush inside and out.

E. All pipe, where cut at the face of the structure wall, shall be cut and ground smooth with the face of the wall.

F. All joints around pipe and structure walls at the face of the wall shall be packed full with mortar.

G. The bottom of drainage structures shall be clean of all debris and walls shall be wiped clean of mortar as the work progresses.

H. Catch basin tops shall be cast-in-place concrete and constructed to line and grade and shall slope continuous with gutter.

I. All structures over four feet deep shall have cast iron steps installed 15-inches on center in a vertical direction. Cast iron steps and manhole rings and covers shall meet ASTM A 48 Specification.

3.05 Rip Rap Replacement

[] Rip rap shall be placed as prescribed by the [Georgia Department of Transportation Standards].

3.06 Detention Pond Construction

A. Detention pond construction shall be scheduled so that it is complete when paving operations begin and temporary sediment traps around storm drain structures are removed.

B. The detention pond is required to be maintained free of silt deposits until such time as Project ground stabilization is complete. Detention pond will be considered for the stage of Substantial Completion when the following occurs:

1. Detention pond construction is complete.

2. Lines and grades as shown on the Drawings are evident with the detention pond free of silt deposits.

3. Ground stabilization for the Project area under this Contract is complete.

3.07 Cleaning

Sewers and structures shall be left clean and free from mud or debris of any kind. When looked through, each line between structures shall show a full circle of light. Otherwise, the Contractor shall be required to remove and replace the defective portion of the work at Contractor's own expense.

END OF SECTION

Part 1 General

1.01 Scope

Furnish all labor, materials, equipment, and incidentals required for clearing and grubbing of existing vegetation and weed eradication in areas where new plantings are to be provided, bed preparation as specified herein and shown on the Drawings, providing trees, plants and ground covers where specified, maintenance of the work prior to Final Acceptance, repair and replacement of damaged landscape work, and all activities designated on the Project Schedule.

1.02 Quality of Work and Materials

The Contractor shall have minimum five years successful experience in the field and shall furnish all materials and perform all work in accordance with these Specifications, Drawings, and instructions provided by the Landscape Architect or Owner's representative hereafter also referred to as Landscape Architect. The work shall include everything shown on the Drawings and required by the Specifications and everything to which, in the judgment of the Landscape Architect, is incidental to what is shown on the Drawings or required by the Specifications. Workmanship and materials shall be of the best quality and shall be in strict accordance with the intention of the Drawings, Specifications and samples. The Contractor shall cooperate with the Landscape Architect so that no error or discrepancy in the Drawings or Specifications shall cause defective or inappropriate materials to be used or poor workmanship to be allowed and so that the work may proceed in the most efficient and effective manner.

1.03 Weather

Plant only during weather conditions favorable to landscape construction and to the health and welfare of plants. Contractor to notify Landscape Architect immediately if directed to commence planting operations in conditions detrimental to plant health.

1.04 Percolation Test

A. The Contractor shall be responsible for determining existing sub-surface drainage conditions for areas to be planted or sodded. The Contractor shall include as a part of his proposal the cost for making the following percolation tests in any area where he is uncertain about adequate sub-surface drainage. Report unacceptable areas to Landscape Architect/Owner’s Representative for instructions.

B. Percolation tests shall be made as follows:

1. Wait at least 24 hours after rain and dig test pit 12-inches square or 13-1/2-inches in diameter to depth of bottom of plant bed and remove all loose soil. (If standing water is visible, notify Landscape Architect).

2. Quickly fill pit bottom with 6 inches (approximately 3-1/4 gallons) of water.

3. Record length of time from filling until disappearance of water and divide

number of minutes by 6 to give average time of 1-inch fall.

4. Compare 1-inch time with following table:

   a. 1 inch in 0 - 3 minutes indicates rapid absorption

   b. 1 inch in 3 - 5 minutes indicates medium absorption

   c. 1 inch in 5 - 30 minutes indicates slow absorption

   d. 1 inch in over 60 minutes indicates impervious soil

5. In plant bed areas where sub-soil conditions do not percolate or the bed is enclosed by pavement, curbs, walks or other hard construction, the Contractor shall install a 4-inch drain line that allows the sub-surface of the bed to drain to the storm system or out to day light on the nearest slope.

1.05 Submittals

A. It is the responsibility of the Contractor, before ordering or purchasing materials, to provide two photographs of each tree type with description to the Landscape Architect for review and approval. Contractor shall tag and deliver trees that match approved sample photographs. Landscape Architect will decide final approval of all plant material on site.

A. (alternate) It is intended that the Contractor acquire specific tagged trees from Bold Springs Nursery (hereafter referred to as the Nursery) at the following address: 3920 Bold Springs Road, Monroe, Georgia 30656, (770) 267-9196, (770) 267-8803 Fax, http://www.boldspring.com, E-Mail: boldspring@mindspring.com , Contact: Mr. Bill Inabinet.

   1. The trees to be acquired are identified as ‘8 inch Athena Elm, (Ulmus Parviflora var. Athena)’ on the planting plan and in the planting list.

   2. The specified trees will be pre paid with two non-refundable deposits equaling a sum of 75% of the wholesale cost of the trees at the nursery.

   3. The contractor will be responsible for the balance of the wholesale cost and delivery and installation of the trees.

B. The Contractor is to submit certification tags from trees, shrubs, seed, and sod verifying type and purity.

C. Materials: Samples of materials as listed below shall be submitted for inspection on the job site, or as otherwise determined by the Landscape Architect.

Material	Sample
Pine Straw	1 Bale
Topdressing Sand	1 Cup
Soil Amendment - Pine Bark Humus	1 Bag
Topsoil	1 Bag
Lime – pellatized	1 Bag
Fertilizer (as specified by soil tests for turf)	1 Bag
Seed (as specified on erosion plan)	1 Bag
Pre-emergent Herbicide	Brand name and contents

D. Soils Test Results: It is the responsibility of the contractor to obtain soils tests and submit results to the Landscape Architect with specific recommendations for soil amendments and fertilization as indicated by the soils tests. Where areas vary significantly in soil composition, slope, or watering schedule, separate tests are required for each area. The Contractor must specify the type of grass, trees and other plants to be installed in each area to be tested. Fertilizer specified for turf grasses will be applied at planting time. The Owner shall be informed of fertilizer specified for trees so that application can be made after the initial growing season when slow-release fertilizer in the root ball has been exhausted.

E. Plants shall be subject to inspection and approval at the place of growth, or upon delivery to the site, as determined by the Landscape Architect, for quality, size and variety. Such prior approval will not impair the right of inspection and rejection at the site during progress of the work or after completion, for size and conditions of balls or roots, latent defects or injuries. Rejected plants shall be removed immediately from the site. Notice requesting inspection should be submitted by the Contractor at least one week prior to anticipated date.

F. Typical samples shall be furnished from each separate source of supply. Approved samples shall be stored on the site and protected until furnishing of material is completed. Plant samples may be planted in permanent positions, but labeled as samples.

G. Upon approval of samples by the Landscape Architect, delivery of materials may begin.

H. Samples: Submit

1.06 Plant Material Size and Measurement

A. Plants shall be measured when branches are in their normal position.

B. Shrubs shall meet the size requirements stated in the Plant List. The measurements are to be taken from the ground level to the average height of the shrub and not to the longest branch. Height and spread dimensions specified refer to the main body of the trees (measured from the crown of the roots to the tip of the top branch) and shall be not less than the minimum size designated.

C. Caliper measurements shall be taken at a point on the trunk six inches above natural ground line for trees up to four inches in caliper, and at a point 12 inches above the natural ground line for trees exceeding four inches in caliper.

D. If a range of size is given, no plant shall be less than the minimum size, and not less than 50% of the plants shall be as large as the upper half of the range specified.

E. The measurements specified are the minimum size acceptable and, where pruning is required, are the measurements after pruning.

F. All dimensions on Schedule shall be the minimum acceptable size. Plants larger in size than specified in the Plant List may be used if approved by the Landscape Architect. If the use of larger plants is approved, the ball of earth or spread of roots shall be increased in proportion to the size of the plant.

G. The minimum acceptable ball size for trees shall be 11-inch diameter per 1-inch caliper taken 6-inches above the ground for trees up to and including 4-inch caliper. Caliper shall be measured 12-inches above the ground for trees larger than 4-inch caliper. In special cases the ball size may be reduced as directed or approved by the Landscape Architect.

1.07 Notification of Delivery

Unless otherwise authorized by the Landscape Architect, the Contractor shall notify the Landscape Architect at least 48 hours in advance of the anticipated delivery date of any plant materials.

1.08 Right of Rejection

The Landscape Architect reserves the right to inspect and reject plants at any time and at any place. Plants held on site for longer than 2 months must be approved by Landscape Architect before installation

1.09 Maintenance

All planting shall be protected and maintained by the Contractor until time of final acceptance as defined in the guarantee. Maintenance shall include but is not limited to watering, weeding, cultivating, removal of dead material, resetting plants to proper grades or upright position, lawn mowing, fertilizing, and other necessary operations. The Owner is responsible for providing adequate maintenance during the warranty period. The Contractor shall submit, in writing, maintenance instructions for use by the Owner in caring for the plants.

1.10 Plant Guarantee

A. All plants, grass, shrubs and trees shall be guaranteed to be alive and healthy one year after the date of final acceptance. The Owner is responsible for notifying Contractor of any plant, including grass, or tree that is dead or not showing satisfactory growth. After not more than a 90-day period following notification, said plant shall be replaced, or conditions contributing to unsatisfactory growth shall be

corrected by Contractor. All replacements shall be of the original quality and shall be of a size equal to that attained by adjacent plants or trees of the same species. Replacement plant material shall be guaranteed to be alive and healthy at the beginning of the following growing season. Only one replacement will be required for each dead grass area. The number of replacements for other plant materials is not limited.

B. The guarantee may become void if it is determined that plant material death or unsatisfactory growth results from Owner negligence. The decision for determination of responsibility for damage shall rest solely with the Landscape Architect.

1.11 Final Approval

The Landscape Architect shall have the final approval for acceptance of the landscaping.

Part 2 Products

2.01 General

A. Water: All water necessary for planting and maintenance shall be of satisfactory quality to sustain the growth of plants and shall not contain harmful, natural or man-made elements detrimental to plants. Water meeting the above standard shall be furnished by the Contractor and all arrangements for securing water and any expenses of transporting to the site and dispersal on the site shall be the responsibility of the Contractor.

B. Commercial Fertilizer: Provide a complete fertilizer, uniform in composition, dry and free flowing, delivered to the site in the original unopened containers, each bearing the manufacturer's statement of analysis, meeting all requirements specified in soils tests.

C. Lime: Shall be agricultural grade hydrated dolomitic line, pellatized lime, and shall be of such fineness that 90% will pass through a No. 20 sieve and not less than 50% through a No. 50 sieve.

D. Soil Test: Revise fertilizer analysis, quantities of fertilizer and lime as dictated by soil tests made prior to planting.

E. Hardwood Mulch: Shall be aged for a minimum of three years and ground to a fine texture. Mulch shall be fresh, clean, free from sticks, cones, leaves and other debris.

F. Pine Straw Mulch: Shall be fresh, clean, free from sticks, cones, leaves and other debris. Pine straw mulch shall be used and maintained as a three-inch top dressing in all plant beds and around all trees planted by the Landscape Contractor. Single trees or shrubs shall be mulched to the outside edge of the saucer. Depth to be minimum three inches at final acceptance.

G. Topsoil: Where required shall be a natural, fertile, friable soil, possessing characteristics of representative productive soils in the vicinity. It shall be obtained from naturally well-drained areas, free from substances harmful to plant growth, and free from clay lumps, stones, stumps, roots, or similar substances two inches or more in diameter. The source and material shall be approved by the Landscape Architect before placing on site. Topsoil shall be free from noxious grass and weeds.

H. Peat Moss: Shall not be used.

I. Pre and Post Emergent Herbicide: Contractor to have a licensed herbicide applicator with a minimum three years experience performing all herbicide applications to lawns, trees and shrubs. Herbicides shall be utilized employing Best Management Practices and only as necessary to control weeds in bed, tree plantings and turf areas, unless applicable codes or ordinances stipulate otherwise. Contractor is responsible to be familiar with all applicable local, state and federal codes, ordinances and regulations. No post or pre-emergent shall be applied to the soil until after all plant installation is complete and before mulching is installed.

J. Staking Material: Trees: Stakes for guying trees under shall be No. 2 Southern Pine, 2 x 2, 36-inch, pressure treated with waterborne preservative complying with AWPA standards U1-04 and T1-04, below ground contact standard, with ACQ minimum retention of 0.40 LB/cu ft.

K. Guying: ArborTie (tm) green or white staking and guying material is to be flat woven polypropylene material, ¾" wide, 900 lb. break strength. Arbortie shall be fastened to stakes in a manner which permits tree movement and supports the tree. For manufacturer's instructions see: ???????

L. Seed: All seed shall be certified stock and appropriately labeled. Contractor shall deliver empty seed bags to Landscape Architect on site.

M. See Planting Plan and Schedule for Plants required. Quantities necessary to complete the work shown on the Drawings shall be furnished. Although quantity estimates have been carefully made, the Landscape Architect assumes no liability for omissions or errors.

N. Plants that meet the requirements specified on the Plant List, but which do not possess a normal balance between height and spread will not be accepted. All plants shall be fresh dug, sound, healthy, vigorous, well branched and free of disease and insect egg and larvae and shall have adequate root systems. Trees for planting in rows shall be uniform in size and shape. All materials shall be subject to approval by the Landscape Architect. Where any requirements are omitted from the Plant List, the plants furnished shall be normal for the variety. Plants shall be pruned prior to delivery only upon the approval of the Landscape Architect.

O. Container Grown Material: All container grown materials shall be healthy, vigorous, well-rooted and established in the containers in which they are sold. They shall have tops which are of good quality and are in a healthy growing condition.

P. An established container grown plant shall be transplanted into a container and grown in that container sufficiently long for the new fibrous roots to have developed so that the root mass will retain its shape and hold together when removed from the container.

Q. The container shall be sufficiently rigid to hold the ball shape protecting the root mass during shipping.

R. Container stock shall be delivered to the site in first class condition. Plants shall have stakes in containers where required to support the plants. Plants furnished in containers shall not be handled by the stems, but only by the containers. Plants root bound in containers shall not be accepted.

2.02 Quality of Plants

A. Plants shall in all cases conform with requirements of the following:

1. Trees and shrubs must comply with the standards found in the most recent edition of the American Standard for Nursery Stock (ANSI Z60.1), published by the American Nursery and Landscape Association (The Standard). If you need to purchase a copy of the Standard, contact ANLA Publications in Washington, DC at 202-789-5980, extension 3019.

2. Georgia State Plant Board Codes and Standards.

3. Georgia Nurseryman and Grower's Association Approved Planting Practices.

4. Bailey, Hortus III

B. Unless specifically noted otherwise, all plants shall be of selected specimen quality, exceptionally heavy, symmetrical, tightly knit, so trained or favored in their development and appearance as to be superior in form, number of branches, compactness and symmetry. All plants shall have a normal growth habit, be free of disease, show vigorous health and have a well developed root system.

C. Plants shall be free of disease, insect pests, eggs or larvae.

D. Plants shall not be pruned before delivery.

E. Trees with abrasion of the bark, sunscalds, disfiguring knots or fresh cuts of limbs over one and one-fourth inches which have not completely callused shall be rejected.

F. All plants shall be typical of their species or variety and shall have a normal habit of growth and be legibly tagged with the proper name. All plants shall have been grown under climatic conditions similar to those in the locality of the site of the project under construction or have been acclimated to such condition for at least two years.

G. The root system of each shall be well provided with fibrous roots. All parts shall be sound, healthy, vigorous, well-branched and densely foliated when in leaf.

H. Container stock shall be delivered to the site in first class condition. Plants shall have stakes in containers where required to support the plants. Plants furnished in containers shall not be handled by the stem, but only by the containers. Plants that are root bound by their containers shall not be accepted.

I. Balled and burlapped plants (BB) shall be dug with firm, natural balls of soil and of sufficient size to encompass the fibrous and feeding roots of the plants. No plants moved with a ball shall be planted if the ball is cracked or broken, except upon special approval. Plants balled and burlapped shall be handled by the stems.

J. Plants marked "BR" in the Plant List shall be dug with bare roots. The roots shall not be cut within the minimum spread specified in the Plant List. Care shall be exercised that the roots do not dry out in moving.

Part 3 Execution

3.01 General

A. Planting operations shall be conducted under favorable weather conditions preferably during the period from October 1 to March 15. The Contractor has the option and assumes full responsibility for planting in unseasonable conditions.

B. Planting of grass shall be accomplished during recommended season dependent on specified grass and planting method.

C. Protect roots or balls of plants at all times from sun and drying winds, water and freezing, as necessary until planting.

3.02 Protection

A. Before commencing work, all trees and shrubs which are to be saved must be protected from damage by the placement of fencing flagged for visibility or some other suitable protective procedure approved by the Owner. No work may begin until this requirement is fulfilled.

B. In order to avoid damage to roots, bark or lower branches, no truck or other equipment shall be driven or parked within the drip line of any tree, unless the tree overspreads a paved way.

C. The contractor shall use any and all precautionary measures when performing work around trees, walks, pavements, utilities, and any other features either existing or previously installed under this Contract.

D. The Contractor shall adjust depth of earthwork and loaming when working immediately adjacent to any of the aforementioned features in order to prevent disturbing tree roots, undermining walks and pavements, and damage in general to any existing or newly incorporated item.

E. Plants transported to the project in open vehicles shall be covered with tarpaulins or other suitable covers securely fastened to the body of the vehicle to prevent injury to the plants. Closed vehicles shall be adequately ventilated to prevent overheating of the plants. Evidence of inadequate protection following digging, carelessness while in transit, or improper handling or storage shall be cause for rejection. All plants shall be kept moist, fresh, and protected. Such protection shall encompass the entire period during which the plants are in transit, being handled, or are in temporary storage.

3.03 Planting Procedure

A. Cleaning Up Before Commencing Work: The Contractor shall clean up work and surrounding areas of all rubbish or objectionable matter. All mortar, cement and toxic material shall be removed from the surface of all plant beds. They must not be stirred with the soil. Extensive clean up work will not be required under this contract. Should the Contractor find such conditions beneath the soil which shall in any way adversely affect the plant growth, he shall immediately call it to the attention of the Landscape Architect. Failure to do so before planting shall render the Landscape Contractor liable for subsequent problems arising from unacceptable subsoil conditions. Use approved herbicide to eliminate temporary plant material as directed.

B. Moving Plants: When trees and smaller plants are moved, the root ball should always be supported. Trees and shrubs should never by handled by the trunk.

C. Stake Out: Stake tree or plant locations and secure approval of them from the Landscape Architect before digging pits, and make adjustments as directed. Locate no tree closer than two feet from pavement or structures.

D. Planting Pit Size: for ball up to two feet in diameter shall be twice the diameter of the ball. Diameter of hole for ball two feet and greater shall be two feet larger in diameter than diameter of ball. Excavate pits with vertical sides.

E. Planting Soil Mixture: for trees shall consist of 1/3 topsoil and 2/3 thoroughly pulverized existing soil mixed with fertilizer and lime if specified in soil test results.

F. Large Plastic Containers: After approval of plant location and orientation by Owner or Owner's representative, cut off bottom of containers over 5 gallons, place plant and containers in planting hole, cut the container on two sides, removing the remaining part of the container. Examine roots to insure that roots have not begun to circle the container. If roots have begun to circle the plant, Contractor may realign the roots in the hole. If root circling is too severe, plant must be rejected and returned to supplier.

G. Wire Baskets: After placing in planting hole and obtaining approval of plant location and orientation by Owner or Owner's representative, remove all twine and rope used to secure wire basket and burlap. Push the wire to the bottom of the root ball. Fill planting pit to two thirds depth with approved planting soil then slit and remove all burlap from the top of the ball at least 1/3 of the way down sides or further as possible. Backfill and cover top of ball with mulch.

H. Trees and Shrubs: Trees shall be set straight and at such level that after settlement the plant crown shall be a minimum of 2 inches above grade. Trees with a ball size of 24" or larger shall be set 4" above grade to allow for settlement. Shrubs shall stand 1 inch – 2 inches above grade mounded. Each plant shall be set in the center of the pit. Backfill mixture shall be thoroughly tamped around the ball and shall be settled by water after tamping. A water holding saucer shall be formed with extra soil. Do not handle the tree by the trunk or use the trunk to straighten or adjust the location. (See Details)

I. Fill: Fill hole with soil mixture and fertilizer as required. Pack lightly with feet. Add more soil. Do not cover top of ball with soil, only with mulch. Make sure no burlap is exposed since exposed burlap acts as a wick causing excessive loss of water.

J. Water Basin: Build basin around all plants or trees which stand alone and are not in larger mulched beds. A water holding earth dam shall be built on the outside of the hole to form a basin to hold water; it shall be 4 – 6-inches high of soil firm enough to remain in place. If necessary, bring in soil. See Detail.

K. Pruning: Each tree shall be pruned to preserve the natural character of the plant as directed by the Landscape Architect. All soft wood or sucker growth and all broken or badly damaged branches shall be removed with a clean cut.

L. Guying or Staking: Shall be done immediately after planting. Trees shall stand plumb after staking or guying in accordance with the Drawings.

3.04 Finish Grading

Prior to applying mulch, plant beds shall be stirred 3-inches deep to loosen soil mixture. Fine grade areas until all bumps and depressions are removed and until the grade conforms to requirements of the grading plan. Eliminate any water pockets and verify surfaces drain away from all buildings. The minimum surface slope of plant beds shall be four percent. Minimum surface slope in lawn areas shall be two percent.

3.05 Weed Control (Herbicide)

Immediately after planting and before applying the mulch, apply pre emergent herbicide per manufacturer's instructions. Apply to all plant beds. Protect lawns, annual beds, ferns, meadow areas and any other susceptible plants. Do not apply within 50 feet of any wetland, stream, lake or other body of water. Do not apply to wet foliage.

3.06 Mulching

On completion of planting, all trees, shrubs and ground cover areas shall be mulched with 3-inch layer of pine straw. All annual beds shall be covered with 2-inch layer of pine bark mini-nuggets.

3.07 Turf

A. General: Includes soil preparation, applying fertilizer, planting and maintenance as required to produce an acceptable stand of grass on areas shown on planting plan.

1. Any damage to planting soil by erosion, construction equipment, construction operations, or other damage shall be repaired prior to application of fertilizer. Finished surface shall be smooth and even.

B. Soil Preparation: After the area to be grassed has been brought to finished grade, prepare the soil by thoroughly loosening the area by plowing, discing, harrowing, or scarifying until these areas are friable, well pulverized and acceptable to the Landscape Architect. Any irregularities in the surface resulting from the above operation or from other operations by the Contractor shall be smoothed out before any subsequent operations are begun. All roots and stones larger than 1-1/2-inch in any dimension, stumps and other foreign material detrimental to final grading, proper bonding, the rise of capillary moisture, or the proper growth of the desired plantings shall be removed.

1. The completed surface shall conform to the finished grades or subgrades shown and shall have a smooth pulverized surface at the time of planting. Any irregularities shall be corrected before the lime and fertilizer are placed.

2. Spread lime and fertilizer over the prepared surface before turning. Fertilizer and lime shall be sufficient to correct irregularities in the soil based on soil tests for the specified turf. Turn the soil one last time the day before planting or placing sod.

C. Sodding

1. Prepare planting bed as described for seeded areas except that fine graded soil shall be 1 inch below finished grade established by the grading plan.

2. Stored sod of the species required in the schedule shall be kept moist prior to laying. Wet all areas prior to sodding.

3. Wet all areas immediately prior to sodding.

4. Unroll the sod on the prepared soil. Lay the strips parallel with the strip ends staggered as in bricklayers' running bond pattern. Press each successively laid strip snugly up against the one next to it. Fill cracks, holes, joints with clean, loose sand, free of all grass and plant seeds.

5. Watering, fertilizing and rolling shall be done by the Contractor as described under "Maintenance of Sodded Areas" below.

D. Maintenance of Sodded Areas: The Contractor shall be responsible for maintaining sodded areas by properly watering, weeding and mowing the grass until an acceptable stand has been produced, and been accepted by the Owner and a minimum of 30 days thereafter.

1. A stand shall be considered acceptable when 95% of the total sodded area has been covered with grass and no bare areas greater than one square foot exist. All cracks, joints, dips, pits and other irregularities in the surface must have been corrected by top dressing with sand.

2. The Contractor shall be responsible for resodding all bare areas greater than one square foot with the specified mixture and for repairing and resodding wash-outs and eroded areas to the original finished grade.

3. Sodded areas shall be mowed when the grass attains a height of 2 inches and as required thereafter until the acceptance of the stand. Reel type mowers, kept well sharpened, shall be used. Turf shall not be accepted until all sod has knitted together and tacked to the soil.

4. All lawn areas shall be given a top dressing of fertilizer to provide 100 pounds available nitrogen per acre when the grass has attained a satisfactory growth and the first mowing has been performed. Nitrogen shall be derived from Ammonium Nitrate or Nitrate of Soda.

5. Contractor shall be responsible to administer a final top dressing of the turf to fix all dips, pits, cracks, etc., for up to 6 months after final acceptance.

E. Seeding

1. Area: All exterior ground within the limit of contract, except surfaces occupied by buildings, structures, paving, and except areas indicated to be undisturbed or mulched, shall be seeded or planted as shown on Drawings.

   a. Furnish topsoil.

   b. Finish grading.

   c. Prepare seed bed.

   d. Seed and maintain areas as indicated on the Drawings.

2. Seed Bed Preparation: Grade areas to finish grades, filling as needed or removing surplus dirt and floating areas to a smooth, uniform grade as indicated on grading plans. All lawn areas shall slope to drain. Where no grades are shown, areas shall have a smooth and continual grade between existing or fixed controls (such as walks, curbs, catch basin, elevational steps or building) and elevations shown on plans. Roll, scarify, rake and level as necessary to obtain true, even lawn surfaces. All finish grades shall meet approval of the landscape architect, before grass seed is sown. Loosen soil to a depth of six inches in lawn areas by approved method in the specifications and grade to remove ridges and depressions. Remove stones or foreign matter over two inches in diameter from the top two inches of soil. Float lawn areas to approximately finish grades.

3. Seed beds should be permitted to settle or should be firmed by rolling before seeds are broadcast.

4. Seeding should not be performed in windy weather.

5. Seeding shall be done in two directions at right angles to each other.

6. Lawn areas shall be seeded by sowing evenly with an approved mechanical seeder at the rate of a minimum of three pounds per 1,000 square feet. Culti-packer or approved similar equipment may be used to cover the seed and to form the seed bed in one operation. In areas inaccessible to culti-packer, the seeded ground shall be lightly raked with flexible rakes and rolled with a water ballast roller. After rolling, seeded areas are to be lightly mulched with wheat straw.

7. If the Project completion date prohibits in-season planting, the Contractor shall prepare for out-of-season seeding or sodding so that all lawns shall be completed and ready for acceptance at time of Project completion, without additional cost to the Owner. Lawn maintenance shall be the same as for other planting.

8. Lawns shall be maintained by the contractor for at least 30 days after sodding and 60 days after seeding, or as long as is necessary to establish a uniform stand of the specified grasses, or until substantial completion of the Project or until acceptance of lawns, whichever is later.

9. In the event that lawn operations are completed too late in the fall for adequate germination and/or growth, maintenance shall continue into the following growing season or until a uniform stand of the specified grasses has been established.

10. Water seeded areas twice the first week to a minimum depth of six inches with a fine spray and once per week thereafter as necessary to supplement natural rain to the equivalent of one inch or to a six inch depth.

11. The surface layer of soil for seeded areas must be kept moist during the germination period. After first cutting, water as specified above.

12. Make weekly inspections to determine the moisture content of the soil and adjust the watering schedule established by the irrigation system installer to fit conditions.

13. After grass growth has started all areas or parts of areas which fail to show a uniform stand of grass for any reason whatsoever shall be reseeded in accordance with the plans and as specified herein. Such areas and parts of areas shall be reseeded repeatedly until all areas are covered with a satisfactory growth of grass at no additional cost to the Owner.

14. Watering shall be done in such a manner and as frequently as is deemed necessary by the Landscape Architect to assure continued growth of healthy grass. All areas of the site shall be watered in such a way as to prevent erosion due to excessive quantities applied over small areas and to avoid damage to the finished surface due to the watering equipment.

15. Water for the execution and maintenance of this work shall be provided by the Owner at no expense to the Contractor. The Contractor shall, however, furnish his own portable tanks, pumps, hose, pipe, connections, nozzles, and

any other equipment required to transport the water from the available outlets and apply it to the seeded areas in an approved manner.

16. Mowing of the seeded areas shall be initiated when the grass has attained a height of one and one-half to two inches. Grass height shall be maintained between one and one-half inches at subsequent cuttings depending on the time of year. Not more than one third of the grass leaf shall be removed at any cutting and cutting shall not occur more often than ten days apart.

17. When the amount of invading grass is heavy, it shall be removed to prevent destruction of the underlying turf. If weeds or other undesirable vegetation threaten to smother the planted species, such vegetation shall be mowed or, in the case of rank growths, shall be uprooted, raked and removed from the area by methods approved by the Landscape Architect.

18. Protect seeded areas against trespassing while the grass is germinating. Furnish and install fences, signs, barriers or any other necessary temporary protective devices. Damage resulting from trespass, erosion, washout, settlement or other causes shall be repaired by the Contractor at his expense.

3.08 Cleaning

A. Perform cleaning during installation of the work and upon completion of the work, remove from site all excess materials, debris and equipment. Repair damage resulting from landscape operations.

B. After all work has been completed and all soil settled and final finished grading completed, clean-up and adjustments shall be made to insure proper depth of topsoil, proper drainage, proper grades adjacent to walks and curbs, proper slope of plant beds, etc. Remove any soil, mulch or plant materials from walks and paving, leaving the areas broom clean.

END OF SECTION

Part 1 General

1.01 Scope

Furnish and install the concrete formwork as required by the concrete outlines shown and indicated on the Drawings and specified in this Section, complete.

1.02 Form Design

Provide the design of all forms for this work. Formwork shall comply with ANSI A10.9 and OSHA Construction Standards, Part 1926, Subpart Q, Concrete, Concrete Forms, and Shoring. In addition, the form designs shall meet the requirements of ACI 347.

1.03 Submittals

A. Do not provide submittals for the structural design of forms.

B. Form Tie Assemblies: Manufacturer's product data sheets fully describing the form tie assemblies.

[] C. Form Releasing Agent: Manufacturer's product data sheets fully describing the form coating. [Manufacturer's certification that the form releasing agent meets the specified standard for liquid containment vessels in water treatment plants.]

D. Plywood Panels: Certification that the plywood panels for use on this work meets the specified standard.

1.04 Storage and Protection

All form materials and accessories shall be stored above ground on framework or blocking, shall be protected from precipitation and shall have adequate air circulation and ventilation.

Part 2 Products

2.01 Form Material

[] A. Smooth Form Finish: Forms for this finish shall be applied to surfaces specified in Section 03300 of these Specifications. Some of these surfaces will receive a [rubbed stone finish] [brushed surface coating] as specified in Section 03300 of these Specifications.

1. Form facing material shall produce a smooth, dense, uniform texture on the concrete. Form facing shall be one of the following:

   a. Plywood, meeting the requirements of U.S. Department of Commerce Product Standard (PS). PS 1 - Construction and Industrial Plywood, B-B

Concrete Form Panels. The arrangement of the facing material shall be orderly with the number of seams kept to a practical minimum.

b. Patented forms may be used, subject to acceptance by the Engineer, provided they produce a smooth, even surface. This acceptance is for the finish these forms will leave on the contact surfaces and will not relieve the Contractor of the responsibility for the design and structural soundness of the forms. Patented forms shall be lined with the specified plywood. Plywood panels and form liners shall not be used more than three times unless further use is acceptable to the Engineer.

B. Rough Form Finish: Forms for this finish shall be applied to the surfaces specified in Section 03300 of these Specifications. Forms for this finish may be the same as specified for the Smooth Form Finish or may be constructed of used plywood panels, unlined steel forms or straight dressed lumber.

2.02 Accessories

A. Form ties for use in all liquid containment structure walls shall be one of the following:

1. Form clamp assemblies with smooth tie rods with a waterstop at their centers; or “she bolt” tie assemblies with a waterstop at their centers.

2. Both of the assemblies shall permit tightening of the forms and be of such type that leaves no tie metal, or any other tie material, within 1-1/2-inch of the surface after use. The assemblies shall provide cone-shaped depressions at the surface of the concrete at least 1-inch in diameter to allow filling and patching with the specified grout.

B. Form ties for use in all other walls shall be one of the assemblies specified in Article 2.02, paragraph A., except that waterstops are not required.

C. Form releasing agents shall permit coating the concrete surface without additional surface preparation.

D. Form releasing agents shall be a non-staining form coating compound.

Part 3 Execution

3.01 Form Construction

A. Formwork shall be in accordance with ACI 347 and as follows:

1. Forms shall conform to shape, lines, and dimensions of members indicated and shall be sufficiently rigid and tight to prevent leakage of mortar. Forms shall be properly braced or tied together so as to maintain position and shape. Construct forms so that they can be removed readily without hammering or prying against the concrete. Forms for exposed concrete shall be carefully made and accurately placed to obtain correct shape and lines.

2. Joints shall be butted tight. Arrangements of panels shall be orderly and symmetrical, and use of small pieces shall be avoided. Forms shall be chamfered 1-inch for external corners of concrete, including top of walls, which will be exposed to view in the finished work.

3. Provide adequate formwork in its entirety. Forms shall safely support loads they will sustain and shall maintain their dimensional and surface correctness to produce members required by the Drawings. Form ties shall be spaced close enough to avoid bulges and variations in the required cross-sectional dimensions shown on the Drawings for the members being cast.

4. Box out for chases, recesses or other openings required in the completed work.

5. Install all the items (sleeves, inserts, hangers, anchors, etc.), to be supported by the formwork as required by the work.

6. Install pipe sleeves, wall pipes and wall sleeves, as shown or specified, for all piping penetrating walls and slabs. The use of block-outs in walls is prohibited. Pipe sleeves shall be used in slabs for plumbing pipes and wiring conduits.

7. Provide a sufficient number of cleanout doors at the base of walls and columns to facilitate cleaning and the application of grout to the column bases.

8. The use of reinforcing steel, partially embedded in concrete, as toe pins or form spacers is prohibited.

3.02 Tolerances for Formed Surfaces

A. Variation from Plumb

1. In the Lines and Surfaces of Columns, Piers, Walls:

   a. In any 10 Feet of Height: 1/4-inch (walls 1/2-inch).

   b. Maximum for the Entire Height: 1-inch.

2. For Exposed Corner Columns, Construction and Expansion Joint Grooves and Other Conspicuous Lines:

   a. In any 20 Foot Height: 1/4-inch.

   b. Maximum for the Entire Height: 1/2-inch.

B. Variation from the Level or from the Grades Shown on the Drawings:

1. In Slab Soffits, Beam Soffits and Tops of Slabs, Measured Before Removal of Supporting Shores:

a. In any 10 Foot Length: 1/4-inch.

b. In any Bay or in any 20 Foot Length: 3/8-inch.

c. Maximum for the Entire Length: 3/4-inch.

2. In Exposed Lintels, Sills, Parapets, Horizontal Grooves and Other Conspicuous Lines:

a. In any Bay or in any 20 Foot Length: 1/4-inch.

b. Maximum for the Entire Length: 1/2-inch.

C. Variation of the Linear Building Lines from Established Position in Plan and Related Position of Columns, Walls and Partitions:

1. In any Bay: 1/2-inch.

2. In any 20 Foot Length: 1/2-inch.

3. Maximum for the Entire Length: 1-inch.

D. Variation in the Sizes and Location of Sleeves for Plumbing Pipes and Electrical Conduits, Floor Openings and Wall Openings: ±1/4-inch.

E. Variation in Cross-Sectional Dimensions of Columns and Beams and in the Thickness of Slabs and Walls: -1/4-inch, +1/2-inch.

F. Variation in Sizes of Pipe Sleeves, Wall Pipes and Wall Sleeves: None.

G. Variation in Location of Pipe Sleeves, Wall Pipes and Wall Sleeves: ±1/8-inch.

H. Footings

1. Variations in Dimensions in Plan: -1/2-inch, +2-inches.

2. Misplacement or Eccentricity: Two percent of the footing width in the direction of misplacement but not more than: 2-inches.

3. Thickness: Decrease in specified thickness - none; increase in specified thickness 25 percent unless otherwise approved by the Engineer.

4. Tolerances above apply to concrete dimensions only, not to positioning of vertical reinforcing steel, dowels or embedded items.

I. Variation in Steps

1. In a Flight of Stairs:

a. Rise: ±1/4-inch.

b. Tread: ±1/4-inch.

2. In Consecutive Steps:

a. Rise: +0-inch, -1/8-inch.

b. Tread: ±1/8-inch.

3.03 Application of Form Coating

Before the placing of reinforcing, faces of all forms to be in contact with the concrete shall receive a thorough coating of the liquid form-releasing agent specified, applied in compliance with the manufacturer's instructions.

3.04 Inspection

Inspect all the work in accordance with Section 03300 of these Specifications.

3.05 Removal of Forms

A. Forms shall be removed in a manner that will insure the complete integrity of the structure. The forms and shoring shall remain in place for the following minimum periods of time after the casting of the concrete is completed:

	Form Removal, Days	Shoring, Days
Beams and Slabs (Soffits)	7	14
Walls	1	0
Columns	1	0

B. Formwork for beam and slab soffits shall be designed so that they can be removed without removal of sufficient original shores to adequately support the work until such time that the concrete strength reaches its specified 28 day strength.

C. Removal of forms shall be coordinated with the selected specified method of curing concrete.

D. Wood forms shall be completely removed from all the work to avoid termite infestation.

END OF SECTION

Part 1 General

1.01 Scope

Furnish and install the concrete reinforcement as shown and indicated on the Drawings and specified in this Section, complete in place.

1.02 Submittals

A. Shop Drawings

1. All shop drawings shall be of the same size. Reproductions of the Drawings for use as shop drawings is not permitted. Shop drawings shall include placing drawings, bending details, and bar lists with bar marks. All details and notes appearing on the Drawings, giving information for the placing of reinforcing steel, shall be shown on the shop drawings. Shop drawings will not be reviewed without such information.

2. Wall reinforcing shall be shown in elevation.

3. Show location and size of all penetrations greater than 6-inches in diameter or across the opening with the corresponding added reinforcing around the penetrations.

4. Submittals shall be complete for each structure. Partial submittals are not permitted and will be returned unmarked. Each submittal shall clearly indicate the structure and Drawing numbers that the work is for. The identifying numbers of the shop drawings for each structure shall be in numerical order.

5. Location and arrangement of accessories shall be clearly indicated.

6. All shop drawings shall be checked by the fabricator and Contractor before being submitted to the Engineer.

B. Mill tests of reinforcing steel shall be submitted prior to use for each 15 tons or less shipped to the site. Tests shall be conducted in conformance with ASTM A 615, and methods prescribed therein.

1. Cost of mill tests shall be borne by Contractor.

2. Three copies of each test report stating whether the material meets the requirements of the ASTM specifications shall be submitted to the Engineer.

3. Certified copies of the mill tests may be considered evidence of compliance provided such tests are regularly conducted by the reinforcement supplier by experienced, competent personnel using adequate testing equipment. In case of doubt as to the adequacy or accuracy of the mill tests, the Engineer may

require the Contractor to furnish, at no additional cost to the Owner, test results from an independent testing laboratory acceptable to the Engineer on mill samples or delivered steel reinforcement.

Part 2 Products

2.01 Reinforcing Bars

A. Bar reinforcement shall be deformed-type bars conforming to ASTM A 615. Reinforcement shall be manufactured from new billet steel of American manufacture, Grade 60.

B. Reinforcing steel shall be shop fabricated to shapes and dimensions indicated on the Drawings and in compliance with applicable provisions of ACI 315, ACI 350, and ACI 318.

C. Bars shall be bent cold. Bars shall be pre-fabricated to detail and delivered on the job plainly tagged and ready to set.

2.02 Welded Wire Fabric

[] Welded wire fabric shall be in flat sheets conforming to ASTM A 185 [A 497], with wire conforming to ASTM A 82 [A 496].

2.03 Accessories

A. All chairs and bolsters shall have plastic-covered or galvanized steel legs at formed slabs and beams. For slabs on grade, bare metal is acceptable.

B. For slabs on grade 10-inches or less, all reinforcing shall be supported on chairs and/or bolsters as required to properly position the bars or welded wire fabric. The chairs and/or bolsters shall be supported on precast concrete pads bearing on the subgrade. The concrete pads shall be at least 6 x 6-inches and be no more than 1-1/2-inches thick. Pads shall be cast from Class "A" concrete or from mortar made up of one part cement and two parts sand, with tie wires embedded.

C. For slabs on grade greater than 10-inches, reinforcing shall be supported directly on concrete brick bearing on the subgrade or the system noted above for slabs 10-inches or less.

Part 3 Execution

3.01 Storage of Materials

Reinforcing steel delivered to the site, not immediately placed in forms, shall be protected from mud and excessive rust-producing conditions by storing in a well-drained area and supported off the ground. All reinforcing shall be properly tagged with their bar marks and location in the structure clearly noted.

3.02 Tolerances

A. Allowable tolerances for fabricating steel reinforcement shall be as follows:

Item	Maximum Tolerance, Inches	
Sheared Length of Bars	+1	-1
Depth of Truss Bars	+0.0	-1/2
Outside Dimensions of Stirrups, Ties and Spirals	+1/2	-1/2
Location of Bends	+1	-1

B. Allowable tolerances for placing steel reinforcement shall be as follows:

Item	Maximum Tolerance, Inches	
Concrete Cover from Outside of Bar to Finished Surface	+1/4	-0.0
Lateral Spacing of Bars in Plane of Reinforcement in Beams and Joists	+1/4	-0.0
Lateral Spacing of Bars in Plane of Reinforcement in Slabs and Walls	+1	-1
Spacing of Stirrups, Ties and Spirals Along Longitudinal Axis of Member	+1/2	-1/4
Height of Bottom Bars in Slabs, Beams and Joists	+1/4	-1/4
Height of Top Bars in Slabs, Beams and Joists	+1/4	-1/4
Depth 8" and Less	+1/2	-1/2
Depth 9" - 24"	+1	-1
Depths 25" & Greater		

3.03 Field Fabrication

Field fabrication of reinforcing steel is not permitted.

3.04 Placement and Anchorage

A. Space metal chairs, bolsters, spacers and hangers in accordance with ACI 315.

B. Reinforcement, at the time concrete is placed, shall be free from rust scale or other coatings that will destroy or reduce bond. Bars with kinks or bends not shown on the plans shall not be used.

C. Reinforcement shall be accurately placed in accordance with the Drawings and shall be adequately secured in position with not less than 16 gauge annealed wire or suitable clips at intersections. Reinforcement shall be held securely at the required distance from the forms. Nails shall not be driven into outside forms to support reinforcement.

D. Install welded wire fabric reinforcement for concrete slabs on ground and as otherwise indicated. Lap all joints 6-inches and wire securely. Extend mesh to within 2-inches of sides and ends of slabs. Sheets that do not lay flat when in their intended position will be rejected. Tags designating the wire size and spacing shall be left on each sheet until ready for use. Tuck ends of welded mesh well down into edge of beams or walls. Do not leave unreinforced border strips. Welded wire fabric shall not contain loose rust. All welded wire fabric shall be supported and tied in its proper location.

E. Conduits: Where conduits are permitted in slabs, low conduit shall be wired to the upper side of bottom reinforcing and top conduit shall be wired to lower side of top steel. Where parallel conduits occur, they shall be separated by at least 2-inches clear.

3.05 Concrete Cover

Unless otherwise shown on the Drawings, the following concrete cover shall be provided for reinforcement:

Bottom and Sides of Footing	3-inches
Walls	2"
Slabs (Framed) Bottom Top	 3/4-inch 1-inch
Beams (Stirrups) Bottom and Sides Top	 1-1/2-inches 2-inches
Columns (Ties, Spirals)	2-inches
Slabs on Grade - Liquid Containment Structures Bottom and Sides Top	 3-inches See Drawings
Slabs on Grade - Other Structures	See Drawings

Reinforcement shall be protected by concrete cover as shown and noted on the Drawings.

3.06 Splicing

A. Splicing of reinforcement shall be as shown and indicated on the Drawings. Splices not shown on the Drawings shall be Class "B" splice, in accordance with ACI 318. Any changes to the location and type of splices desired by the Contractor must be specifically requested and must meet with the acceptance of the Engineer before they can be used.

B. Splices shall not be made at point of maximum stress and shall provide sufficient lap to transfer stress between bars by bond.

C. Mechanical splices may be used instead of lap splices provided that their location and type meets with the acceptance of the Engineer.

3.07 Inspection

Inspect all the work in accordance with Section 03300 of these Specifications.

END OF SECTION

Part 1 General

1.01 Scope

The work under this Section includes, but is not necessarily limited to, furnishing and installing all concrete accessories as indicated on the Drawings, herein specified, and as necessary for the progress and complete performance of this work.

1.02 Submittals

The waterstop manufacturer shall submit documented test results demonstrating that the waterstop will not permit water leakage when subjected to pressure and joint movement.

1.03 Quality Assurance

The waterstop manufacturer shall demonstrate five years (minimum) continuous, successful experience in production of waterstops.

1.04 Storage and Protection

Store waterstops under tarps to protect from oil, dirt, and sunlight.

Part 2 Products

2.01 Acceptable Manufacturers

A. Waterstops for construction joints shall be Wirestop Waterstop Type No. FR-6380 manufactured by Paul Murphey Plastics Company, Rossville, Michigan; Vinylex Waterstop Type R6-38T manufactured by Vinylex Corporation, Knoxville, Tennessee; or Greenstreak Waterstop Style 783 manufactured by Greenstreak, St. Louis, Missouri.

B. Waterstops for expansion joints shall be Greenstreak Waterstop Type 735 as manufactured by Greenstreak, St. Louis, Missouri, Wirestop Waterstop Type No. CR-9380 as manufactured by Paul Murphy Plastics Company, Rossville, Michigan, or Vinylex Waterstop Type RB9-38H as manufactured by Vinylex Corporation, Knoxville, Tennessee.

C. HR waterstops for construction joints shall be Hydrotite Waterstop Profile CJ-0725 manufactured by Greenstreak, St. Louis, Missouri; or Swellseal Plus manufactured by deNeef Conchem, Inc., Waller, Texas.

2.02 Materials and Construction

A. Waterstops

1. Waterstops shall be extruded from an elastomeric plastic compound of which the basic resin shall be prime virgin polyvinyl chloride meeting U.S. Army Corps of Engineers Specification CRD-C572-74. The PVC compound shall not contain any scrapped or reclaimed material or pigment whatsoever.

2. Provide factory installed hog rings, grommets, or embedded wire loop to facilitate tying off waterstop at 12-inches on center along the length of the waterstop.

3. Provide factory made PVC waterstop fabrications for all changes of direction, intersections and transitions, leaving only straight butt joint splices for the field.

4. Hydrophilic rubber (HR) waterstops shall be coextruded hydrophilic rubber consisting of a combination of chloroprene rubber and chloroprene rubber modified to impart hydrophilic properties.

5. Hydrophilic rubber (HR) waterstops shall have a delay coating to inhibit initial expansion due to moisture present in fresh concrete.

6. Minimum profile dimensions of HR waterstop shall be 1/4 x 1-inch.

B. Dovetail Slots

1. No. 22 gauge, galvanized steel, 1-inch wide back.

2. Crimped anchors shall be furnished by other trades whose work abuts concrete.

C. Inserts for General Trades

1. Malleable iron, strength as required.

2. Include bolts, nuts, and washers.

D. Expansion Joint Filler

1. Asphalt impregnated fiberboard, ASTM D 1751, for interior work.

2. Self-expanding corkboard, ASTM D 1752, for exterior work.

E. Construction Joint Form for Building Floor Slabs on Grade: 16 gauge, tongue and groove galvanized metal.

F. Control Joint Form for Building Floor Slabs on Grade

1. 20 gauge galvanized steel.

2. Depth shall be 1/4 the slab thickness or more.

G. Flashing Reglet: 26 gauge galvanized steel. Coordinate with waterproofing subcontractor.

2.03 Other Materials

All other materials not specifically described, but required for a complete and proper installation of concrete accessories, shall be as selected by the Contractor subject to the approval of the Engineer.

Part 3 Execution

3.01 Installation

A. General: Install concrete accessories as indicated on the Drawings, specified in various other Sections and as necessary for the proper and complete performance of this work.

B. Waterstops

1. Waterstops shall be installed in all construction joints in walls and slabs which are to hold water and also where shown on the Drawings. The waterstop shall extend the entire length of the joint and all splices shall be installed and tested in accordance with the manufacturer's recommendations.

2. Waterstops for all joints shall be continuous around all corners and intersections. For PVC waterstops, provide factory formed corners and intersections where angle intersections occur, and only straight splices shall be made in the field. Splices shall be made in accordance with the manufacturer's recommendations and shall be subject to the approval of the Engineer.

3. No holes will be permitted in waterstops.

4. PVC waterstops shall be securely fastened to formwork or reinforcing steel every 12-inches or less on both edges as required to concrete placement.

5. Hydrophilic rubber (HR) waterstops shall be spliced using cyanoacrylate adhesive (super glue) and a band-aid seal of hydrophilic polyurethane sealant.

6. Cut coil ends of HR waterstops square (or at proper angle for mitered corners) with shears or sharp blade to fit splices together without overlaps.

7. Joinery between PVC and HR waterstops shall be sealed using hydrophilic polyurethane sealant.

C. Piping, Mechanical and Electrical Equipment Support

1. Inserts for hangers will be supplied by the trade whose work is supported.

2. Locations of the inserts shall be given to the Contractor by the various trades.

3. Installation of the cast-in-place inserts shall be by the Contractor.

D. Dovetail Slots: Install dovetail slot at 24-inches on center where masonry adjoins concrete.

END OF SECTION

Part 1 General

1.01 Scope

Furnish and install the cast-in-place concrete as shown and indicated on the Drawings and as specified in this Section, complete.

1.02 Submittals

A. Mix designs for all groups and classes of concrete.

B. Strength and slump tests results.

C. Certificates of compliance for each of the following:

1. Cement
2. Aggregates
3. Fly ash
4. All admixtures

Part 2 Products

2.01 Cement

Cement shall be standard Portland Cement, of American manufacture, conforming to ASTM C 150, Type II. Only one brand of commercial Portland cement shall be used in the exposed concrete of the structure. Cement reclaimed by cleaning bags or from leaking containers shall not be used in this work. Each bag shall weigh approximately 94 pounds and contain one cubic foot.

2.02 Concrete Aggregates

A. Fine aggregate shall be sand having clean, hard, durable, uncoated grains and free from deleterious substances and shall conform to ASTM C 33.

B. Coarse aggregate shall be crushed stone having clean, hard, durable, uncoated particles conforming to ASTM C 33.

2.03 Water

Water used in mixing concrete shall be clean and free from deleterious amounts of acids, alkalies or organic materials.

2.04 Expansion Joint Filler

See Section 03250 of these Specifications for expansion joint filler.

2.05 Waterstops

See Section 03250 of these Specifications for waterstops.

2.06 Vapor Barrier

Vapor barrier shall be polyethylene sheeting, minimum 6 mil thickness, conforming to ASTM C 171. Sheeting shall be drilled with 1/2-inch holes at 6 to 10-inch centers each way.

2.07 Admixtures

A. Water reducing admixture shall conform to ASTM C 494, Type A.

B. Water reducing, retarding admixture shall conform to ASTM C 494, Type D.

C. Non-Corrosive, Non-Chloride Accelerator: The admixture shall conform to ASTM C 494, Type C.

D. Air entraining admixture shall conform to ASTM C 260.

E. Fly ash shall conform to ASTM C 618, Type F.

F. High range water reducer (HRWR) shall conform to ASTM C 494, Type F or G and shall be one of the following:

1. Rheobuild 1000 and 716, manufactured by Master Builders

2. Daracem 100, manufactured by W.R. Grace

3. Sikament 320, manufactured by Sika Corporation

4. Eucon 37, manufactured by Euclid Chemical Company

G. Calcium Chloride: Calcium chloride or admixtures containing more than 0.1 percent chloride ions are <u>not</u> permitted.

2.08 Curing and Sealing Compounds

A. Curing compound shall be acrylic based, conforming to ASTM C 309.

B. Sealing compound shall be one of the following:

1. Masterseal 340, manufactured by Master Builders

2. Sikaguard 701W, manufactured by Sika Corporation

3. Super Rez Seal, manufactured by Euclid Chemical Company

Part 3 Execution

3.01 Concrete Quality

A. Two groups of concretes are required. Group I is concrete with a HIGH RANGE WATER REDUCER (HRWR), Group II is concrete without HRWR.

1. Group I: All Group I concrete shall contain the specified fly ash. The combined weight of cement and fly ash shall contain no less than 20 percent nor more than 25 percent of fly ash. The combined weight of cement and fly ash shall be used as the weight of cement in the determining of the water-cement (w/c) ratio. The following class of concrete is required:

Class of Concrete	Compressive Strength @ 28 Days	Slump Range	Maximum W/C Ratio
A	4,000	1" - 2"	0.4

a. The slump range in the above table is required prior to adding the High Range Water Reducer (HRWR). Slump tests shall be made prior to adding the HRWR. The HRWR shall be added to the concrete at the batch plant. The slump range required after the addition of the HRWR is 7 to 10-inches. HRWR shall be capable of maintaining 7 to 10-inch slump in excess of 60 minutes of continuous mixing at 4 to 6 rpm in a truck mixer and workability up to 90 minutes. After introduction of HRWR, concrete temperature shall be maintained within 3 degrees F for 90 minutes when concrete temperatures are in excess of 90 degrees F. Except for the air-entrainment admixture, no other admixture shall be used with the HRWR. Upon 72 hours notice, the HRWR manufacturer shall supply jobsite technical service to the Contractor. The manufacturer shall be consulted for mix proportions and dosage rates. No added chlorides shall be used. The initial set shall not be in excess of six hours at temperatures above 50 degrees F. HRWR shall be used with due consideration given to the air temperature at the time of batching and casting.

b. Air Content: All concrete shall have an air content of 4.0 percent to 7.0 percent.

c. Group I concrete shall be used in all walls and columns for liquid containment structures.

2. Group II: The following classes of concrete are required:

Class of Concrete	Compressive Strength @ 28 Days	Slump Range	Maximum W/C Ratio
A	4,000	3" - 5"	0.45
B	1,500	3" - 5"	none specified

a. Air Content: All concrete shall have an air content of 2.5 to 5.0 percent.

b. Admixture Usage: All concrete placed at air temperatures above 50 degrees F shall contain a water reducing admixture or water reducing-retarding admixture. All concrete placed at air temperatures below 50 degrees F shall contain the specified non-corrosive non-chloride accelerator.

c. Group II, Class A concrete shall be used for all work not specified as Group I concrete.

d. Fly ash is required in all slabs for liquid containment structures, either on grade or formed. Provisions for fly ash use in Group I concrete shall apply.

e. The use of fly ash is not required for the remainder of Group II concrete, but is permitted. If used, the provisions for fly ash use in Group I concrete shall apply.

3.02 Mix Designs

A. Mix design shall be proportioned in accordance with ACI 211.1 making maximum use of the coarse aggregate. The proportioning shall be based on the requirements of a well-graded high density plastic workable mix within the slump range and strengths required. The mix shall contain no less than 1,850 pounds of coarse aggregate per cubic yard of concrete, shall be based on conventional conveying and shall not be altered for use in pumping. Pumping equipment, if used, shall be of sufficient size and design to pump the mix designed for conventional conveyance.

B. Coarse Aggregate

1. Coarse aggregate for base slab can be Size No. 467.

2. Coarse aggregate for all concrete work shall be Size No. 57.

3. Size No. 467 may be used in lieu of Size No. 57 in concrete members whose minimum size dimension is 12-inches or larger.

C. Submit samples, in adequate quantities for each mix design and verification, of all concrete materials to be used on the project to the designated testing laboratory. Do not use any concrete in this work without acceptance and verification of design mix by the testing laboratory and the approval of the Engineer.

D. If trial batches are used, the testing laboratory shall make strength tests from trial batches in the laboratory using materials and mix designs proposed for use by the Contractor. The testing laboratory shall prepare trial batches in accordance with ACI 211.1.

E. If field experience method is selected, the proposed mix design shall be accompanied by complete standard deviation analysis and at least 30 consecutive strength tests that represent the proposed mix.

F. The proposed mix design and supporting data shall be submitted, in triplicate, to the testing laboratory for their review and comments at least 21 days prior to the expected start of concreting operations. The testing laboratory will forward two copies of the submittal to the Engineer with their comments. The Engineer will review the submittal and return one copy to the Contractor with the Engineer's comments.

G. Compression test specimens made to verify the mixes shall be made in accordance with ASTM C 192. All compression test specimens shall be tested in accordance with ASTM C 39.

3.03 Plant Mixing

A. Proportioning Concrete

1. Proportions shall be in compliance with approved design mix for each class of concrete.

2. The mixing plant shall be provided with adequate equipment and facilities for accurate measurement and control of the quantities of material and water used in the concrete.

3. Concrete materials shall be measured by weight except that admixtures shall be measured by volume.

B. Batching

1. Provide all necessary equipment to accurately determine and control actual amount of materials entering into the concrete mix. Individual ingredients shall be weighted separately for each batch. Accumulative weighing will be allowed if equipment is in acceptable working order as determined by the testing laboratory and approved by the Engineer. Accuracy of all weighing devices shall be such that successive quantities can be measured to within one percent of the desired amount.

2. Completely discharge contents of the mixer before each new batch is loaded. Use of retempered concrete is not permitted.

3. Ready-mixed concrete shall be mixed and delivered in accordance with requirements of ASTM C 94 and the following:

a. A separate water metering device (not truck tank) shall be used for measuring water added to the original batch.

b. Use of wash water as a portion of the mixing water is not permitted. Wash water added to empty drums after discharging shall be dumped before a new batch is received.

c. Centrally mixed concrete shall be mixed for the length of time specified herein, not “shrink-mixed”.

d. Mixing drums shall be watertight.

e. Concrete shall be discharged within one hour from the time concrete was mixed, if centrally mixed, or from time the original water was added, if transit-mixed.

f. Furnish delivery ticket with each load of concrete delivered under these Specifications. Delivery ticket shall show clearly the class and strength of concrete, size of coarse aggregate, water per cubic yard, its slump, quantities of all admixtures, the date and time of departure from the batching plant, and the time of placement.

3.04 Conveying Equipment

A. If concrete is to be transported in carts or buggies, the carts or buggies shall be equipped with pneumatic tires.

B. Equipment for chuting or other methods of conveying concrete shall be of such size and design as to insure a practically continuous flow of concrete at delivery without segregation of concrete.

3.05 Conveying

A. Concrete shall be conveyed from mixer to place of final placement by methods which will prevent separation or loss of the material.

B. Runway supports shall not bear upon reinforcing steel or fresh concrete.

C. All conveying equipment shall be thoroughly cleaned before each run of concrete is begun.

3.06 Delivery and Protection of Materials

A. Deliver ready-mixed concrete in compliance with requirements of ASTM C 94.

B. The following tests shall be made at the work site prior to placement of concrete:

1. Slump Tests: ASTM C 143.

2. Air Content: ASTM C 173 or C 231

3. Test Cylinders: ASTM C 31

3.07 Severe-Weather Provisions

A. Hot Weather Concreting: Protect in accordance with ACI 305R except as modified herein.

1. Provide adequate methods of lowering temperature of concrete ingredients so that the temperature of concrete when placed does not exceed 90 degrees F.

2. Concrete shall not be placed when the air temperature is expected to exceed 100 degrees F within 12 hours after casting.

3. When the air temperature is 75 degrees F and above, forms and reinforcing shall be thoroughly wetted with water so that the concrete will be placed against wet and cooled surfaces. All excess water shall be removed before casting the concrete.

4. Protection and Curing - Slabs (On Grade and Formed)

a. Protect slabs from damage due to dry winds and high temperatures.

b. Protect slabs from direct sun at temperatures of 85 degrees F and above.

c. Moist curing of all slabs shall start as soon as the surface of the fresh concrete is hard enough to permit curing without damage to the surface of the concrete.

5. Protection and Curing - Formed Surfaces: As soon as the concrete has set, wet the forms and keep the forms wet during the curing period. Provide for keeping the top of the walls, and other top surfaces, moist during the curing period.

B. Cold-Weather Concreting: Protect in accordance with ACI 306R except as modified herein.

1. Provide adequate equipment for heating concrete materials and protecting concrete from damage during freezing or near-freezing weather. No frozen materials, or materials containing ice, shall be used.

2. All concrete materials and all reinforcement, forms, fillers and ground with which concrete is to come into contact shall be free from frost.

3. Whenever the temperature of the surrounding air is below 40 degrees F and falling, all concrete placed in the forms shall have a temperature of between 70 and 80 degrees F, and adequate means shall be provided for maintaining a temperature of not less than 70 degrees F for three days, or 50 degrees F for

five days, or for as much more time as is necessary to insure proper curing of the concrete. If high early strength concrete is used, the requirement for maintenance of 50 degrees F may be reduced to three days.

4. Use only the specified non-chloride accelerator. Calcium chloride or admixtures containing more than 0.1 percent chloride ions are not permitted.

5. Housing, covering or other protection used in connection with curing shall remain in place and intact at least 24 hours after the artificial heat is discontinued.

3.08 Construction Joints and Expansion Joints

A. Formed Construction Joints in Containment Structures and Where Otherwise Shown: Prior to placing concrete next to the joint, the joint surface shall be thoroughly cleaned and dampened with water. Remove all free water so that the surface of the joint shows signs of drying before placing the adjacent concrete.

B. Construction joints in Beams, Girders and Slabs Where Waterstops are not Specified or Shown to be Installed: These joints shall be located at points of minimum shear and their locations shall be approved by the Engineer before they are bulkheaded. These joints shall be roughened and thoroughly cleaned of all foreign matter and laitance and dampened with water. Remove all free water and slush with a coat of neat cement grout before placing the adjacent concrete. Place the adjacent concrete before the neat cement grout takes its initial set.

C. Construction Joints in Beams, Girders and Slabs: Where waterstops are specified or shown to be installed. These joints shall be treated as specified in paragraph A. above.

D. Construction Joints in Columns: These joints, unless otherwise shown on the Drawings, shall be located at the bottom of the girder, beam or slab it receives, and at the top of slabs when the column continues through a slab level. These joints shall be treated as specified in Paragraph B, above.

E. Expansion Joints: Expansion joints shall be installed where shown on the Drawings.

3.09 Waterstops

Waterstops shall be provided where specified and as indicated and noted on Drawings and shall be made continuous throughout their length.

3.10 Inspection of Work Before Placing Concrete

A. Inspect the area to receive concrete for any deficiencies which would prevent proper placing of concrete. Do not proceed with placing concrete until such deficiencies are corrected.

B. Do not place in the concrete any item that is not required to be in the concrete by the Drawings and Specifications. Insert all the items shown on the Drawings or specified properly positioned and secured. Openings other than those which are facilitated by sleeves shall be properly formed and positioned.

C. Remove hardened, or partially hardened, concrete on forms or reinforcement before placing concrete.

D. Do not place concrete on earth until the fill or excavation has been prepared as set forth under applicable sections of the Specifications for that work.

E. Give the Engineer at least 48 hours notice before any concrete is to be placed. Concrete shall not be placed until the Resident Inspector has signed a Concrete Preplacement Sign-Off Card completed by the Contractor. The Concrete Preplacement Sign-Off Card certifies that the formwork, reinforcing, and all inserts required for mechanical and electrical work, instrumentation, plumbing, process piping, metal embeds, and any other inserts or miscellaneous specialties required for the work are supported in their proper position; that the formed enclosure is clean, and the surfaces to receive concrete are prepared as specified. A sample of the Concrete Pre-Placement Sign-Off Card is attached to this Section.

3.11 Placing

A. Place concrete as nearly as practicable in its final position to avoid segregation due to rehandling or flowing. Do not place concrete on work that has partially hardened or been contaminated by foreign material, and do not use retempered concrete. In no case shall Group II concrete be placed when the elapsed time after addition of water and cement to batch exceeds one hour. For Group I concretes, this elapsed time may be extended if sufficient data from this construction indicates a time extension is permissible and if approved by the Engineer.

B. Concrete shall be placed in a manner to avoid the displacement of reinforcing, and coating or spattering the reinforcing steel. The placing of concrete within form work shall be regulated so that the pressure within form work does not exceed the design pressure. In placing concrete each layer shall be placed following the preceding layer to prevent lines of separation or “cold joints” in the work. After the concrete reaches it initial set, jarring the formwork or placing strain or vibration on the ends of projecting reinforcing bars shall be avoided.

C. Group I concrete shall not be dropped more than 10 feet. Group II concrete shall not be dropped more than four feet. All concrete placed over PVC waterstops shall drop no more than 6-inches until there is at least one foot of concrete above the PVC waterstop, at which point the drop distances may be increased to those noted above.

D. Once concrete placing has started, it shall be carried on as a continuous operation until placing of the concrete between construction joints is completed.

E. Concrete shall be placed in layers not over 12-inches deep and each layer shall be compacted with the aid of mechanical internal-vibrating equipment supplemented by

hand spading. Vibrators shall in no case be used to transport concrete. Use of form vibrators are not permitted. Internal vibrators shall maintain a speed of not less than 5,000 impulses per minute when submerged in the concrete. At least one spare working vibrator shall be on the job site as a back-up. Duration of vibrator use shall be limited to that necessary to produce satisfactory consolidation without causing objectionable segregation. Vibrator shall not be lowered into courses that have begun to set. Apply vibrator at uniformly spaced points not further apart than the visible effectiveness of the machine. Type and use of vibrators shall be in accordance with ACI 301.

F. Provide vapor barrier under all slabs on soil, sand or stone. Use largest sheets practicable to reduce number of joints. Lap joints a minimum of 24-inches. Remove torn and punctured sheets and replace with new sheets prior to placing concrete. Placing of concrete shall be done in a manner that will not damage the vapor barrier material. The sub-base material shall be as shown and/or noted on the Drawings.

3.12 Protection

Protect freshly placed concrete from damage or injury due to water, falling objects, persons or anything that may mar or injure finish surface on concrete. Only light use of slabs will be permitted for the first 14 days after placing of the concrete.

3.13 Curing

A. Curing shall conform to ACI 308 except as modified herein.

B. All Slabs on Grade: After placement and finishing, concrete shall be maintained in a moist condition for at least seven successive days during which the temperature of the concrete is 50 degrees F or above. For temperatures of 50 degrees F and below, curing period shall be 14 successive days. Concrete shall be kept moist by any one, or combination, of the following methods:

1. Ponding or Immersion: Continually immerse the concrete in water throughout the curing period. Water shall not be more than 20 degrees F less than the temperature of the concrete.

2. Fog Spraying or Sprinkling: Provide uniform and continuous application of water throughout the curing period.

3. Pervious Sheeting: Completely cover surface and edges of the concrete with two thicknesses of wet sheeting. Overlap sheeting 6-inches over adjacent sheeting. Sheeting shall be at least as long as the width of the surface to be cured. During application, do not drag the sheeting over the finished concrete nor over sheeting already placed. Wet sheeting thoroughly and keep continuously wet throughout the curing period.

4. Impervious Sheeting: Wet the entire exposed surface of the concrete thoroughly with a fine spray of water and cover with impervious sheeting throughout the curing period. Lay sheeting directly on the concrete surface and

overlap edges 12-inches minimum. Provide sheeting not less than 18-inches wider than the concrete surface to be cured. Secure edges and transverse laps to form closed joints. Repair torn or damaged sheeting or provide new sheeting. Inspect surface of concrete daily for wetness. The surface shall be kept continuously wet during the curing period.

C. All Other Concrete: After placement, concrete shall be maintained in a moist condition for the same periods as specified above for slabs on grade.

1. Concrete in Formed Surfaces - Slabs, Beams, Columns and Building Walls: Keep forms and exposed surfaces wet with water during the curing period. If forms are removed before the end of the curing period, apply a curing compound within one hour after form removal.

2. Concrete in Formed Surfaces - Containment Vessel Walls: Keep forms wet with water during the curing period. If forms are removed before the end of the curing period, continue the moist curing in accordance with Paragraph A of this Article of these Specifications.

3.14 Patching

A. As determined by the Engineer, any concrete which is out of alignment or level has a defective surface or has defects which reduce its structural adequacy, shall be considered as not conforming with the Drawings and Specifications and shall be rejected.

B. Do not take any remedial action on concrete with any defect without the permission of the Engineer.

C. Unless the Engineer grants permission to patch the rejected concrete, remove the rejected concrete and replace it with concrete that conforms to the Drawings and Specifications. The location of cut lines and the extent of removal will be determined by the Engineer.

D. If the Engineer grants permission to patch the rejected concrete, it shall be done in accordance with the following:

1. Permission to patch rejected concrete will not be a waiver of the Engineer's right to require complete removal of the rejected concrete if the patching does not, in the Engineer's judgment, restore the concrete to the requirements of the Specifications and Drawings.

2. Patching shall be accomplished after the curing is completed.

3. Defective areas shall be chipped away to a depth of not less than 1-inch, in all cases to sound concrete, with edges perpendicular to the surface. Feather edges will not be permitted. Remove all loose material and thoroughly clean the chipped surfaces with a high pressure air hose delivering air at 100 psi. The area to be patched and an area at least 6-inches wide surrounding it shall be

dampened. A bonding grout shall be prepared using a mix of approximately one part cement to one part fine sand passing a No. 30 mesh sieve, mixed to the consistency of thick cream, and then well brushed into the surfaces as noted below in paragraph 5.

4. The patching mixture shall be made of the same materials and of approximately the same portions as used for the original concrete, except that the coarse aggregate shall be omitted and the mortar shall consist of not more than one part cement to two and one-half parts sand by damp, loose volume. White Portland cement shall be substituted for a part of the gray Portland cement to produce a color matching the color of the surrounding concrete, as determined by a trial patch. The quantity of mixing water shall be no more than necessary for handling and placing. The patching mortar shall be mixed in advance and allowed to stand with frequent manipulation with a trowel, without addition of water, until it has reached the stiffest consistency that will permit placing.

5. After surface water has evaporated from the area to be patched, the bond coat shall be well brushed into the surface. When the bond coat begins to lose the water sheen, the premixed patching mortar shall be applied. The mortar shall be thoroughly consolidated into place and struck off so as to leave the patch slightly higher than the surrounding surface. To permit initial shrinkage, it shall be left undisturbed for at least one hour before being finally finished. The patched area shall be kept damp for seven days. Finishing tools that produce a finish matching the surrounding shall be used.

E. Tie holes left by withdrawal of rods or the holes left by removal of ends of wall ties shall be filled solid with mortar after first being wetted. For holes passing through the wall, a plunger-type grout gun shall be used to force the mortar through the wall starting at the back face. A piece of burlap or canvas shall be held over the hole on the outside and when the hole is filled, the excess mortar shall be struck off with the cloth flush with the surface. Holes not passing through the walls shall be filled with a small tool that will permit packing the hole solid with mortar. Any excess mortar at the surface of the wall shall be struck off flush with a cloth. Mortar shall consist of one part cement, two and one-half parts sand and no more water than necessary for handling and packing.

3.15 Finishes on Formed Surfaces

A. Upon completion of patching, surfaces of concrete shall be finished as follows:

? 1. Rubbed Stone Finish

a. Stone rubbed finish shall be applied on a Smooth Form Finish (see Section 03100), and by rubbing the surfaces with carborundum stone and water. The rubbing shall produce an even and smooth finish of uniform color and texture without the addition of any cement to the process, using only the cement paste produced by the rubbing of the concrete.

b. Areas to receive this finish shall be rubbed after the moist curing has been completed.

c. The following surfaces shall receive a stone rubbed finish surface coating:

i. All exterior wall concrete surfaces to levels not less than 6-inches below finish grade.

ii. All interior wall concrete surfaces within buildings and other such surfaces exposed to view in the finished work (except floor slabs).

iii. The interior side of liquid containment structure walls to a level not less than 12-inches below normal liquid level, including top of walls.

? 1. Brushed Finish Surface Coating

a. The brush finish surface coating shall be applied over a Smooth Form Finish (see Section 03100).

b. The materials used shall be applied in two separate coats to provide a uniform finish on exposed surfaces that have received the initial rubbed finish. The materials shall be mixed and applied strictly in accordance with the written recommendations of the product manufacturer. The actual application of the material shall be performed by workers who have been instructed in the preparation and application of the material. The final brushing of the material during application shall be performed in such a manner as to present a uniform and attractive appearance, with the final brushing generally being done in one direction. The materials shall be especially manufactured for the purpose of waterproofing exterior concrete surfaces, and enhancing the appearance of the concrete surface. The final color of the finish shall be pearl gray, or near that of good quality cured natural concrete. Texture of material shall be approved by the Engineer. Material shall be Thorocoat as manufactured by Thoro System Products.

c. The following surfaces shall receive a brushed finish surface coating:

i. All exterior wall concrete surfaces to levels not less than 6-inches below finish grade.

ii. All interior wall concrete surfaces within buildings and other such surfaces exposed to view in the finished work (except floor slabs).

iii. The interior side on containment tank walls to a level not less than 12-inches below normal liquid level, including top of walls.

2. Smooth Form Finish is required for all concrete surfaces exposed to view in the completed work and all liquid containment structure walls whether exposed to view or not in the completed work. Accomplish the required patching and the following touch-up:

a. Remove all burrs.

b. Remove all form marks.

c. Smooth out lines of indentations.

3. Rough Form Finish shall be produced by filling all tie holes and honeycomb and in other respects leaving the surface as formed. All concrete surfaces which will be covered by earth and which will not be visible in the completed structure (except as noted above for liquid containment structure walls which shall have a Smooth Form Finish), may receive a Rough Form Finish.

3.16 Steel Troweled Finish - Floor Slabs

A. Steel troweled finish shall be applied to the surface of all building and liquid containment structure floor slabs and interior equipment pads.

B. Concrete shall be placed, consolidated, struck-off and leveled to the proper elevation. After the surface has stiffened sufficiently to permit the operation and the water sheen has disappeared, the surface shall be wood floated, by hand or power floated, at least twice, to a uniform sandy texture. Floors shall be leveled such that depressions between high spots do not exceed 1/4-inch under a 10 foot straightedge except where drains occur, in which case the floors shall be pitched to the drains as indicated on the Drawings.

C. After the concrete has received a wood float finish, it shall be troweled at least twice to a smooth dense finish. The drying of the surface moisture before floating or troweling shall not be hastened by the dusting on of dry sand or cement. The first troweling shall be done by a power trowel and shall produce a smooth surface relatively free of defects. Additional troweling shall be done by hand after the surface has hardened sufficiently. The final troweling shall be done when a ringing sound is produced as the trowel is moved over the surface. The surface shall be thoroughly consolidated by the hand troweling operations. The finished surface shall be free of any trowel marks or other imperfections; shall be uniform in texture and appearance, and shall be in true plane within the tolerance specified. Any deviation from this condition which remains after the troweling is completed shall be corrected by grinding.

3.17 Broom Finish

A. Broom finish shall be applied to:

1. All exterior side walks, walkways and platforms.

2. All steps and landings, both interior or exterior.

B. The surface shall be given a floated finish as specified above, then finished with a flexible bristle broom or burlap belt drawn across the surface. Surface must be hardened sufficiently to retain the scoring or ridges. Scores or ridges shall be transverse to traffic or at right angles to the slope of the slab.

?[]3.18 Surface Preparation for Finish Grout [or Topping]

[] The surface shall be given a wood float finish and moist cured. After the curing period, the finish grout [or topping] shall be applied where indicated and noted on the Drawings.

3.19 Testing Laboratory

A. The testing laboratory shall have access to all places where concrete materials and concretes are manufactured, stored, proportioned, mixed, placed and tested. Duties shall include, but not necessarily be limited to the following:

1. Make, store, transport, cure and test compression specimens made during placing of concrete. Compression test specimens shall be tested in accordance with ASTM C 39. Test reports shall show all pertinent data, such as class of concrete, exact location of pour, air temperature, date of pour, time of pour, truck number for ready-mixed concrete, date on which specimen was broken, age of specimen, compressive strength of specimen, concrete slump test results and air content of concrete from which the specimen was made. One copy each of all tests shall be sent to the Contractor and two copies each to the Engineer.

2. Each strength test requires four standard test cylinders.

3. Samples for strength tests of each class of concrete placed each day shall be taken not less than once a day, nor less than once for each 100 cubic yards of concrete, nor less than once for each 5,000 square feet of surface area for slabs or walls.

4. Each class of concrete shall be tested with at least five strength tests.

5. From each set of four cylinders, two shall be tested at 28 days and shall comprise a strength test under the definition of these Specifications. One cylinder shall be broken at seven days and will be used as an aid in determining the early strength of the concrete and the 28 day strength, and one cylinder retained in reserve for later testing if required.

6. Test for unit weight of concrete when the first load of each class of concrete is delivered and thereafter at the discretion of the testing laboratory.

B. Periodically inspect the batching plant and file a report with the Engineer stating whether the supplier's equipment and methods meet the requirements of these Specifications.

C. Temperature and Placing Record: Temperature record shall be made each day during the concreting operations. Records shall also include location, quantity and starting and finishing time of placement for all concrete work. Copy distribution shall be as specified above for test reports.

3.20 Evaluation of Compression Tests

A. Evaluation of compression test results shall be as follows: For each class of concrete, compression-strength tests for laboratory-cured cylinders shall be considered satisfactory if the averages of the results of all sets of three consecutive compression-strength tests equal or exceed the 28 day design compression-strength specified; and, no individual cylinder strength test falls below the required compression strength by more than 500 psi. Strength tests of specimens cured under field conditions may be required by the Engineer to check the adequacy of curing and protecting of the concrete placed. Specimens shall be molded by the field testing laboratory at the same time and from the same samples as the laboratory-cured specimens.

B. Faulty Concrete: Failure to comply with any of the specified conditions shall constitute faulty concrete. Unless otherwise directed by the Engineer, faulty concrete shall be removed and replaced with concrete as specified, at no expense to the Owner.

C. Additional Test: If permitted by the Engineer, additional tests shall be subject to the approval of the Engineer and at no expense to the Owner. Load tests, if permitted by the Engineer, shall be conducted in accordance with the loading criteria as required by the design of the structure, as determined by the Engineer.

D. Neither the results of laboratory verification tests nor any provision in the Contract Documents shall relieve the Contractor of the obligation to furnish concrete of the class and strength specified.

END OF SECTION

CONCRETE PREPLACEMENT SIGN-OFF CARD

Project:_____

Inspection Date:_____ Concrete Placement Date: _____

Expected Time of Concrete Placement:_____

Estimated Quantity:_____

Mix Design Strength:_____

Location of Structure:_____

Member (walls, beams, etc.):_____

Weather Conditions:_____

Method of Pour: Chute _____ Bucket_____ Pump_____

Conveyor _____ Other _____

	Status			
Work	Ready	N/A	Signature	Date
Formwork				
Reinforcing				
Mechanical				
Electrical				
Instrumentation				
Plumbing				
Process				
Metal Embeds				
Miscellaneous Specialties				
Clean-Up/OK to Place				

The Contractor certifies that the above work to be cast is prepared in accordance with the Contract Documents.

Contractor (Superintendent):_____ Date:_____

Resident Inspector:_____ Date:_____

Part 1 General

1.01 Scope

This Section describes nonmetallic grout and grouting methods to be used in the setting of motors, compressors, pumps, aerators, vessels, tanks, pipe supports, structures and other miscellaneous items of equipment that require grout between their baseplate, bedplate or soleplate and the top of the concrete surface to which they are to be anchored.

1.02 General

A. The Contractor shall furnish all labor, grouting materials, water, equipment, forms and other items necessary or convenient to the Contractor for the proper preparation, placement and curing of grout.

B. Nonshrink, epoxy and sand-cement grouts shall be stored, mixed, handled and placed in accordance with the recommendations of the grout manufacturer and the American Concrete Institute (ACI), as applicable.

C. No grout shall be placed until the place of grouting has been inspected and approved by the Engineer.

1.03 Submittals

A. Prior to placement of any nonshrink or epoxy grout, the Contractor shall submit to the Engineer complete engineering and product data on the grout, including manufacturer's recommendations for mixing, placement and curing.

B. The Contractor shall also submit to the Engineer written evidence that the grout, cement and aggregate are in conformance with the material and mechanical requirements specified herein. Certified copies of independent laboratory test results or mill test results from the grout, cement and/or aggregate supplier may be considered evidence of compliance provided such tests are performed in accordance with the appropriate ASTM or Corps of Engineers testing standards by experienced, competent personnel. In case of doubt as to the accuracy or adequacy of mill tests, the Engineer may require that the Contractor furnish test reports from an independent testing laboratory on samples of grout, cement and/or aggregate.

1.04 Storage

All grout shall be stored above ground and shall be protected at all times from moisture, high humidity, oil and extremes of temperature. Grout or cement which has been resacked or has become caked or lumpy shall not be used.

1.05 Safety

Proper precautions shall be taken to protect workers during handling of epoxy resins and hardeners. All mixing and placement of epoxy grouts shall be done in well-ventilated areas. The specific safety recommendations of the manufacturer shall be strictly adhered to.

Part 2 Products

2.01 Nonshrink Grout

Column baseplates, all pumps, compressors, motors and other heavy equipment items shall be grouted in place with a nonmetallic, noncorrosive, nongaseous, nonshrink grout requiring no cutback or protective coating. Nonshrink grout shall show zero shrinkage from the placement volume or initial expansion volume as determined by ASTM C 827, and shall have an initial set time at 70 degrees F of not less than 45 minutes as determined by ASTM C 191. When tested in accordance with ASTM C 109, nonshrink grout shall have a one-day compressive strength of not less than 2,000 psi and a 28-day compressive strength of not less than 8,000 psi at a flow of not less than 100 percent determined in accordance with Corps of Engineers Specification CRD-C-621. The grout shall contain no corrosive irons, calcium chloride, oxidizing catalysts, gas-forming agents, harmful aluminum or corrosive chemicals and shall be resistant to oil, water and sewage. The grout shall be premixed and shall require only the addition of water prior to placement. The grout shall be delivered to the job site in unopened, plastic-lined bags and shall have the manufacturer's mixing instructions printed on the back of each bag. Nonshrink grout shall be Masterflow 928 Grout as manufactured by Master Builders Company, or Five Star Grout as manufactured by Five Star Products, Inc.

2.02 Sand-Cement Grout

A. Pipe support baseplates, tanks and miscellaneous small items of equipment shall be grouted in place using a sand-cement grout consisting of one part Portland cement, two parts fine aggregate and a maximum of 4.5 gallons of water per sack (cubic foot) of cement. Portland cement shall be Type III conforming to ASTM C 150. Fine aggregate shall be natural siliceous sand, consisting of hard, clean, sharp, dense, durable and uncoated particles.

B. Fine aggregate shall be free from organic material and injurious amounts of deleterious substances and shall be graded as follows:

Sieve Size No.	Percent (by weight) Passing
4	100
8	95 - 100

Sieve Size No.	Percent (by weight) Passing
16	60 - 100
30	35 - 70
50	15 - 35
100	2 - 15

C. Except as modified herein, fine aggregate shall conform to the requirements of ASTM C 144.

D. Fine aggregate to be used with epoxy binders shall be dried prior to use to remove any free moisture.

2.03 Nonshrink Epoxy Grout

Nonshrink epoxy grout shall be used in special equipment grouting applications requiring high bonding or tensile strength where shown on the Drawings. This grout shall be a pre-measured and prepackaged product containing thermosetting epoxy resins and inert fillers; and shall be delivered to the work site in unopened containers. Nonshrink grout shall be Ceilcote 648 CP Grout (Master Builders, Inc.) or Five Star Epoxy Grout (Five Star Products, Inc.)

2.04 Water

Water used in the preparation of nonshrink and sand-cement grout shall be clean, potable water, free from oil, alkali, acid, organic matter and other deleterious substances.

Part 3 Execution

3.01 Foundation Preparation

A. Prior to setting equipment or placing grout, the foundation to receive grout shall be chipped or sandblasted so as to expose the coarse aggregate and create a roughened condition. All surfaces to be in contact with the grout, including the bottom of the baseplates or sole plates, shall be thoroughly cleaned until free of all oil, grease, laitance, dust, curing compounds and other foreign substances. If the surface is to receive nonshrink or sand-cement grout, the roughened surface shall be washed with liberal amounts of clean water and shall be soaked for a least 24 hours immediately preceding grouting. Prior to placement, all free water shall be removed using an air hose or other suitable method.

B. Surfaces to receive an epoxy grout shall be completely dry and free from all visible moisture. Where it is impractical to obtain a moisture-free surface, the Engineer may authorize the use of epoxy grout on damp surfaces provided the epoxy formulation is moisture-compatible. When applying grouts to damp surfaces all free water shall be

removed and the epoxy formulation shall be carefully selected so that localized boiling of entrapped moisture due to excessive exotherm does not occur.

3.02 Mixing

A. The specific recommendations and instructions of the grout manufacturer shall be strictly adhered to in all proportioning, mixing and placing of grout. The grout shall be mixed as close to the point of use as is practical. A mechanical mortar mixer may be used for mixing large quantities of nonshrink or sand-cement grout. No more grout shall be mixed than can be placed in the time preceding initial set. Grout that has stiffened prior to placement shall be discarded. Only that amount of water required to produce the necessary degree of flowability shall be used. The grout mixture shall not be retempered by adding water.

B. Components of epoxy grout systems shall be accurately proportioned and thoroughly mixed so as to produce a uniform and homogeneous mixture. Accuracy of proportioning of epoxy compounds shall be ± five percent of the manufacturer's specified mixing ratio. Mixing of small quantities (up to one quart) of epoxy grout may be accomplished by hand using spatulas, palette knives, or similar devices. For larger volumes, mechanically driven tumbling or paddle type mixers shall be used. Paddle type mixers shall be driven by a low speed (400-600 rpm) motor to prevent introduction of excessive amounts of entrained air into the mixture. Mixing shall continue until the mixture is uniform and homogeneous, but in no case less than three minutes. The manufacturer's recommended temperature range for mixing the epoxy grout shall be followed in all field mixing.

C. After mixing, epoxy grout shall be allowed to stand for approximately five minutes to allow initial air release.

3.03 Placement

A. Grout shall be carefully placed by troweling, ramming, or pouring, as is most suited to the application, so that all voids and cavities between the foundation and equipment baseplate or bedplate are filled. Air-relief holes shall be provided, if necessary, to eliminate entrapped air. If a pourable or flowable grout is required, suitable forms shall be provided for containing the grout. Forms shall be securely anchored and caulked to prevent leakage of grout. Grout shall be placed from one side only. Forms shall be of sufficient height to allow at least 6-inches of head on the grout above the bottom of the baseplate on the side where the grout is to be placed. Grout shall be placed until it protrudes from the entire perimeter area. Baseplates shall be located so as to provide a minimum clearance of 1-inch between the foundation and the bottom of the baseplate. The temperature of the foundation and baseplate or soleplate shall be maintained above 45 degrees F during placement and for at least 24 hours thereafter. Heating of foundation and baseplate surfaces shall be accomplished using heated enclosures, heat lamps or radiant heaters so as to achieve uniform heating. Use of direct flame shall be prohibited. Concrete structures shall be heated a minimum of four hours prior to grouting to ensure proper heating of the concrete mass. Temperature of heated surfaces shall not exceed 100 degrees F at the time of placement. When placing nonshrink or sand-cement grout under

unusually hot or cold weather conditions, grouting practices shall comply with the requirements of ACI 305 and 306, respectively.

B. Epoxy grout formulations shall possess exotherm properties compatible with the anticipated substrate and placement conditions. Where large masses of epoxy are involved or if ambient or substrate temperatures are high, relatively low exotherm formulations shall be used. Conversely, where very small quantities or thin films of epoxy are involved or if ambient or substrate temperatures are low, a high exotherm formulation shall be used.

C. When placing epoxy grouts by pouring, care shall be taken to ensure that segregation of aggregate and epoxy binder or entrapment of entrained air does not occur prior to initial set. To prevent this condition, epoxy grout shall be placed in successive lifts under the baseplate or bedplate not to exceed 1-inch in thickness.

3.04 Finishing and Curing

A. Forms shall be left in place until the grout is hardened enough so that it cannot flow. Unconfined edges of grout shall be cut off flush or beveled and shall be trowelled to produce a smooth finish. Wedges and shims used in levelling rotating, vibrating or other heavy items of equipment shall be removed after the grout has hardened three days. All voids shall be regrouted using the same grouting material. Removal of shims and wedges from column baseplates and pipe support baseplates is optional. Anchor bolts shall not be pulled up to final torques until shims and wedges have been removed and the grout is hard enough to permit equipment operation.

B. After placement, exposed edges of water-cured grout shall be wet cured by covering with wet burlap, wet sand, or polyethylene film for at least seven days. During cold weather grout shall be maintained at a temperature for a period of time following placement that will ensure proper hardening and curing.

END OF SECTION

Part 1 General

1.01 Scope

The work covered by this Section consists of furnishing all labor equipment and materials required for the placement of all brickwork and related work as described herein and/or shown on the Drawings.

1.02 Submittals

A. Certificates: Submit two copies of the brick manufacturer's specifications and other data for each type of brick required, including certification that each type complies with the specified requirements.

B. Samples: Submit three samples of each type of exposed brick required. Include in each set the full range of exposed color and texture to be expected in the completed work. Engineer's review will be for color and texture only. Compliance with all other requirements is the exclusive responsibility of the Contractor.

1.03 Sample Panels

A. After approval of masonry units, mortar and color of mortar used in unpainted masonry exposed to view, construct a sample panel facing south of each type of masonry work required. Masonry sample panel shall be 48 x 48-inches; return ends 16-inches long x 48-inches high. Sample panel shall be typical of work as it will appear in the completed Project.

B. Protect approved sample panel with suitable covering from damage or deterioration by weather and construction traffic, until late in the Project when approval to destroy and remove the sample panel is given. Destroy and remove debris resulting from rejected sample panels at once.

C. Where brick work is required to match existing buildings, construct a sample panel of the size as specified, located adjacent to an existing wall to verify match. The Engineer will approve the match.

1.04 Storage and Protection

A. Store brick off ground on level platforms to prevent contamination by mud, dust or materials likely to cause staining or other defects. Allow air circulation under stacked units. Cover materials as necessary to protect from elements. Protect anchors, ties and reinforcement from weather with suitable coverings.

B. Handle units on pallets or flat bed borrows. Do not permit free discharge from conveyor units or transporting in mortar trays.

1.05 Protection Requirements

A. Cover top of walls with nonstaining, waterproof coverings at end of each day or shutdown. Cover partially completed walls with nonstaining, waterproof membrane when work is not in progress. Provide a minimum two foot overhang of securely anchored protective covering each side of wall.

B. Protect masonry construction from direct exposure to wind and sun when erected in an ambient air temperature of 99 degrees F (37 degrees C) in the shade with relative humidity of less than 50 percent.

C. Do not apply uniform floor or roof loading for at least 12 hours after completing masonry columns or walls.

D. Do not apply concentrated loads for at least three days after completing masonry columns or walls.

Part 2 Products

2.01 Brick

A. Obtain from a single manufacturer, brick of uniform texture and color or uniform blend in the variation thereof, for each continuous area and for visually related area. Brick shall match existing adjacent building.

B. Size: Unless otherwise shown or specified, provide modular size brick (7-5/8-inches long x 2-1/4-inches high x 3-5/8-inches wide) for exposed vertical brickwork.

C. Coring: At Contractor's option, provide solid or cored brick for vertical brickwork. Do not use cored brick with net cross-sectional area less than 75 percent of gross area in the same plane or with core holes less than 3/4-inch from any edge.

D. Face brick units shall be made of clay or shale material, conforming to the latest specification of ASTM C 216, shall be grade SW, type FBS (normal variations) as established therein.

E. Color and texture of brick units used shall be selected by the Owner from sample panels submitted by the Contractor from the proposed supplier, except when matching existing buildings.

2.02 Weephole Material

Weepholes shall be manufactured of PVC, rubber tube or sash cord.

2.03 Joint Reinforcement

Joint reinforcement shall comply with “Specification for Cold-Drawn Steel Wire for Concrete Reinforcement”, ASTM A 82 and shall be galvanized steel of trussed design with nine gauge cross rods welded to 3/16-inch deformed side rods. Reinforcement

shall be 2-inches less in width than nominal wall thickness.

2.04 Dovetail Anchors

Dovetail anchors shall be 26 gauge galvanized steel. Lengths, spacings and locations as per standard construction practice where required.

2.05 Cleaning Agent

As recommended by brick manufacturer.

Part 3 Execution

3.01 Scaffolding

Scaffolding shall be provided as required. Scaffolding shall not be overloaded and shall be inspected regularly by the Contractor to verify that it is amply strong, well braced and securely positioned. The Contractor shall be unconditionally responsible for the safety of the scaffolding at all times.

3.02 Inspection

A. Inspect foundations to assure surfaces to support brickwork are to proper grades and elevations, free of dirt and other deleterious material. Surfaces not properly prepared shall be satisfactory corrected.

B. Verify initial absorption rate of brick is within acceptable limits.

3.03 Preparation

Reduce initial absorption of brick by thoroughly wetting brick with clean water 24 hours prior to placement. Remove all dirt, loose rust and scale from anchors, ties and reinforcement prior to installation.

3.04 Allowable Tolerances

Maximum variation from plumb in lines and surfaces shall not exceed 3/8-inch in any story or 20 foot maximum or 1/2-inch in 40 feet.

3.05 Installation

A. General: Masonry shall not be laid when temperature is below 40 degrees F. Do not install cracked, broken or chipped brick units exceeding ASTM allowance. Use masonry saws to cut and fit exposed units. In no case shall less than 1/2 brick be present at jambs and at exterior and interior corners. Adjust shelf angles to keep work

level and at proper elevation. Provide pressure relieving joints by placing a continuous 1/8-inch foam neoprene pad under the shelf angle.

B. Protection: Protect sills, ledges and offsets from mortar drippings and face materials against staining.

C. Mortar Beds: Brick units shall be laid in running bond unless noted otherwise, with full mortar coverage on horizontal and vertical joints in all courses.

D. Joints: Unless shown or specified otherwise, all joints shall be 3/8-inch nominal thickness. Exterior or exposed joints shall be finished with smooth concave contour. Interior joints shall be tooled flush. Trowel point exterior joints below grade. Fill horizontal joints between top of masonry partition and underside of concrete beams with mortar. Where ties, anchors and bolts occur within the cells of the units, such cells shall be filled with mortar or grout as the work progresses.

E. Tuck Point Joints: Rake mortar joints to a depth of 1/2 to 3/4-inch, saturate exposed joints with clear water, fill joints solidly with pointing mortar and tool to match existing work.

F. Flashings: Clean surface of masonry smooth and free from projections which might puncture or otherwise damage flashing material. Place through wall flashing on bed of mortar. Cover flashing with mortar.

G. Weepholes: Provide weepholes in head joints in first course immediately above all flashing. Space weepholes 24-inches on center, unless shown otherwise.

H. Sealant Joints: Retain sealant joints around outside perimeters of exterior doors, window frames and other wall openings. Uniform depth shall be 1/2-inch and 1/4-inch width.

I. Anchoring: Anchor exterior brick walls facing or abutting concrete or steel members with dovetail, flatbar or wire anchors inserted in slots built into the member. Maximum anchor spacing shall be 24-inches vertically and 32-inches horizontally. Maintain a space of not less than 1/2-inch wide between mason wall and concrete members to permit differential movement.

J. Brick Veneer Anchoring: Attach brick veneer to backing with metal ties. Maximum spacing shall be 24-inches vertically and 24-inches horizontally. Imbed ties at least 2-inches in horizontal joint of facing.

K. Wall Reinforcement: Place wall reinforcement in first masonry bed joint above finished floor and in alternate bed joints (16-inch on centers) thereafter. Place wall reinforcement in first and second bed joints (8-inch on centers) above and below openings. Lap splices 6-inch minimum, or per supplier's recommendation. Corner reinforcement detail shall be in accordance with manufacturer's recommendations.

3.06 Pointing and Cleaning

A. Cut out any defective joints and holes in exposed masonry and repoint with mortar.

B. Dry brush masonry surface after mortar has set at end of each day's work and after final pointing.

C. If necessary, exposed masonry surfaces shall be scrubbed with warm water and soap and fiber brush and thoroughly rinsed with clear water. Work which may be damaged, discolored or stained shall be protected during the cleaning process. The use of sapolio or wire brushes or acid for washing down walls shall not be permitted.

D. Protect all finished work against freezing for a period of not less than 48 hours by means of enclosures, temporary heat or such other protective methods as may be required and directed by the Engineer.

END OF SECTION

Part 1 General

1.01 Scope

A. The work covered by this Section consists of furnishing all labor, equipment and material required for the correct placement and construction of concrete masonry units and related work as described herein and/or shown on the Drawings.

B. Work for Other Trades: Bolts, anchors and shelf angles shall be the responsibility of the Contractor. However, the subcontractors requiring such work are responsible for furnishing complete information to the Contractor.

C. Furnish and install all precast concrete sills, lintels and parking bumpers as described herein and/or shown on the Drawings.

1.02 Submittals

A. Samples: Submit samples of masonry units as required by the Engineer, of each type required, including special shapes, to show range of colors, texture, finishes and dimensions.

B. Certification: Furnish manufacturer's written certification accompanied by suitable laboratory or mill test reports that masonry units furnished meet or exceed the requirements of these Specifications.

C. Shop Drawings: Contractor shall submit detail drawings of precast sills, coping and lintels for approval by the Engineer before proceeding with fabrication.

D. Glazed CMU: Submit product literature, color kit, test report copies, and representative shapes.

1.03 Sample Panel

A. After approval of glazed concrete masonry units, mortar and mortar color construct a panel no less than 4’ x 4’ of units of each color and size to be used. Sample shall be typical of work as it appears in the completed Project. Do not remove panel until building has been accepted.

B. Protect approved sample panel with suitable covering from damage or deterioration by weather and construction traffic.

1.04 Storage and Protection

A. Store masonry units above ground on level platforms which allow air circulation under stacked units. Cover and protect against wetting prior to use. Handle units on pallets or flat bed barrows. Do not permit free discharge from conveyor units or transporting in mortar trays.

B. Glazed Masonry Units: Delivery to jobsite on banded pallets with individual protective covers on each glazed block face. Keep protective block cover on block unit until installation. Store pallets in single stacks on level ground and cover with waterproof covering to protect block from inclement weather. Handle block to avoid breakage and damage to the finish surface.

1.05 Quality Assurance

A. The compressive strength of masonry shall be verified by either the unit strength method or the prism test method outlined in ACI-530.1

B. Testing and inspection requirements shall be in accordance with Level 3 as defined in ACI-530.1.

1.06 References

ACI-530.1 Specification for Masonry Structures.

Part 2 Products

2.01 Glazed Concrete Masonry Units

A. Glazed concrete masonry units shall conform to ASTM C 90.

B. Pre-faced Surfaces Interior Use: The glazed surface shall have smooth face satin gloss finish, externally heat-polymerized cost-on facing conforming to ASTM C 744.

C. Colors: Select from manufacturer's established or custom colors. All standard or special color series must conform to ASTM C 744.

D. Glazed Face Size and Joints: Modular 8" x 16", 4" x 16", 8" x 8" and 16" x 16" including 1/4" exposed face joints. Provide glazed corner faced units where required. Provide special shapes to suit conditions shown.

E. Concrete Block Sizes Before Glazing: Modular 4", 6", 8", 10" and 12" thickness as required.

F. Surface Burning Characteristics: Comply with ASTM E 84; flame spread less than 25; fuel contribution 0; smoke density less than 50.

G. Concrete Block for Glazing: ASTM C 90 for hollow and solid load bearing units; Type 1 (moisture controlled).

H. Acceptable manufacturers

1. Trenwyth Industries

2. Spetra Glaze: Manufacturer - The Burns and Russell Company

3. Approved equal

2.02 Concrete Masonry Units

A. Concrete block shall have 8 x 16-inch face with 4, 6, 8, 10 or 12-inch nominal width, as indicated.

B. Hollow masonry units shall comply with "Specification for Hollow Load-Bearing Concrete Masonry Units", ASTM C 90, Grade N. Hollow masonry units shall be one of the following:

1. Medium weight, 105 to 125 pcf concrete. Minimum net compressive strength of 1,900 psi.

2. Light weight, concrete weighing less than 105 psf. Minimum net compressive strength of 1,900 psi.

2.03 Horizontal Reinforcement

A. Reinforcement shall be equal to that as manufactured by Dur-O-Wall, Inc., shall be fabricated to properly fit the wall as designed in accordance with the manufacturer's recommendations, and shall be of the prefabricated type for use in masonry mortar joints. Wall reinforcement shall be of ladder design with No. 9 gauge deformed hot dipped galvanized side rods and No. 9 gauge hot dipped galvanized cross rods. Joint reinforcement shall comply with "Standard Specification for Cold Drawn Steel Wire for Concrete Reinforcement", ASTM A 82 and ACI 530.

B. Reinforcement at veneer wall shall be "LADUR-EYE" sized so that pintles hold the rigid insulation in place.

C. Dovetail anchors shall be galvanized steel. Lengths shall be in accordance with standard construction practice, where required.

D. Weld-on column anchors shall be continuous weld-on anchor rods, ¼-inch diameter with 3/8-inch offset providing 7-3/4-inch vertical adjustment.

E. Weld-on anchor straps shall be continuous 12 gage x ¾-inch wide straps.

2.04 Through Wall Flashing For Single Wythe CMU

Through wall flashing shall be .0625-inch thick HDPE flashing with integral weeps equal to "BLOK-FLASH" by Advanced Building Products, Inc.

Part 3 Execution

3.01 Erection and Workmanship

A. Scaffolding shall be provided, as required. Scaffolding shall not be overloaded and shall be inspected regularly by the Contractor to verify that it is amply strong, well braced and securely positioned. The Contractor shall be unconditionally responsible for the safety of the scaffolding at all times.

B. Masonry shall not be laid when the temperature is below 40 degrees F. Walls shall be carried up level and plumb all around. Unfinished work shall be stepped face for joining with new work; toothing shall not be permitted. Heights of masonry shall be checked by the Contractor with an instrument at each floor and at sills and heads of openings to maintain the level of the walls.

C. Masonry units shall be handled with care to avoid chipping, cracking and spalling of faces and edges. Drilling, cutting, fitting and patching to accommodate the work of others shall be performed by qualified masons. Masonry shall be cut with a masonry saw outside of buildings. Chipping or breaking with a hammer will not be permitted.

D. Door and window openings, louvered openings, anchors, pipes, ducts and conduits shall be built in carefully as the work progresses. Ties and anchors shall be placed accurately. Metal work specified elsewhere shall be placed in position as the work progresses. Grouting of ties and anchors into hardened mortar or grout shall not be permitted.

E. Unless noted otherwise, masonry units shall be laid in running bond. The first course of masonry shall be laid in a full bed of mortar; and the succeeding courses shall be shoved (not laid) in beds of mortar to fill the joints full without subsequent flushing and filling. Unless shown or specified otherwise, all joints shall be 3/8-inch thick. Where ties, anchors and bolts occur within the cells of the units, such cells shall be filled with mortar or grout as the work progresses.

F. Concrete masonry units shall be dry when laid. Each unit shall be adjusted to final position in the wall while the mortar is still soft and plastic. Any unit disturbed after mortar has stiffened shall be removed and relaid with fresh mortar. Vertical cells to be filled with grout shall be aligned to provide a continuous unobstructed opening of the dimensions shown. Chases shall be plumb and shall be minimum one unit length from jambs of opening.

G. Exterior or exposed masonry joints shall be finished with smooth concave contour. Procedure used in striking joints shall be as follows: first strike the bed joints; next strike the head joints; then strike bed joints as required to remove any spots, etc., from intersection of bed and head joints. After mortar has initial set but before mortar is hard, restrike the head joints to provide clean, smooth intersection of the head and bed joints. Interior and exterior joints to receive masonry coating shall be tooled flush.

H. At the end of each day's work, the tops of exposed masonry walls shall be covered with a strong, nonstaining waterproof membrane well secured in place. Surfaces not being worked on shall be properly protected at all times. Unfinished work shall be stepped for joining with new work. Before new work is started, all loose mortar shall be removed and the exposed joint thoroughly wetted, not less than 30 minutes before laying new work.

I. Control joints shall be installed where concrete masonry units abut dissimilar materials and shall be installed vertically in exterior walls at 20 feet on center, unless shown otherwise on the Drawings. Control joints shall be constructed by omitting joint mortar and installing a back-up rod and sealant at both faces of the concrete masonry unit.

J. Butt Joints: At the vertical joint between interior and exterior walls and at other butt joints, install back-up rod and sealant versus mortar.

K. Maximum variation allowed from plumb in vertical lines of columns, pilasters, walls and arrises shall be 1/4-inch in 10 feet, 3/8-inch in a story height not to exceed 20 feet, or 1/2-inch in 40 feet or more.

3.02 Horizontal Reinforcement

A. Place wall reinforcement in first masonry bed joint above finished floor and in alternate bed joints (16-inches on center) thereafter unless noted otherwise on the Drawings.

B. Masonry joint reinforcement shall be placed so that longitudinal wires are located over face shell mortar beds and are fully embedded in mortar for their entire length with minimum mortar cover of 5/8-inch of exterior side of walls and 1/2-inch at other locations. Reinforcement shall be placed in first and second bed joint above and below openings. Reinforcement in the first bed joint immediately above and below openings shall be continuous. In the second bed joint it shall extend two feet beyond each side of the opening.

C. Reinforcing shall be lapped a minimum of 6-inches at splices. Corner and abutting wall reinforcement shall be prefabricated corner and tee sections.

D. Dovetail anchors shall be installed where masonry abuts concrete and shall be installed in each masonry bed joint which contains horizontal reinforcement.

E. Do not bend any galvanized item.

3.03 Through Wall Flashing

Through wall flashing shall be installed in exterior walls at 8-inches above finish floor and on top of all lintels above masonry openings in accordance with manufacturer’s written instructions.

3.04 Sample Panel

Provide a glazed CMU sample panel 4'-0" long by 4'-0" high with one vertical control joint.

3.05 Cleaning

A. Glazed Masonry Units: Keep walls clean daily during installation using brushes or rags and a clean damp cloth. Harsh cleaning methods that mar the surface of the blocks after erection are unacceptable and shall not be used on the Project. Do not allow excess mortar lumps or smears to harden on the glazed surfaces. Remove green mortar with dry cloth. Do not use steel wool, sandpaper or other abrasives.

B. Non-Glazed Masonry Units: During construction, care shall be taken to keep exposed face of masonry clean of mortar and other stains. Joints shall be raked as they reach thumbprint hardness. The exposed work shall then be brushed with a soft fiber brush to remove adhering mortar. A wooden paddle shall be used to remove more tenacious material. Bases of walls shall be protected from splash stains by covering the adjacent floor or ground with sand, sawdust or polyethylene film.

C. At completion of work, holes in exposed masonry shall be pointed and defective joints shall be cut out and tuck pointed solidly with mortar.

D. If necessary, exposed masonry surfaces shall be scrubbed with warm water and soap and fiber brush and thoroughly rinsed with clear water. Work which may be damaged, discolored or stained shall be protected during the cleaning process. The use of sapolio or wire brushes or acid for washing down walls shall not be permitted.

E. Protect all finished work against freezing, for a period of not less than 48 hours, by means of enclosures, temporary heat or such other protective methods as may be required and directed by the Engineer.

F. Masonry Cleaners: As recommended by manufacturer.

END OF SECTION

Part 1 General

1.01 Scope

This Section includes the following: Glass Masonry.

1.02 Submittals

A. General: Submit each item in this Article according to the Conditions of the Contract.

B. Product data for each type of product specified, including data substantiating that materials comply with requirements for each glass masonry material specified. Include recommended method of installation instructions, and procedures for glass masonry and accessories.

C. Samples: Submit three samples of each type, color and size of glass masonry units specified. Submit one sample of each reinforcement accessory specified.

1.03 Quality Assurance

A. Installer Qualifications: Engage an experienced installer with a record of successful in-service performance.

B. Applicable standards: Standards of the American Society for Testing and Materials (ASTM), as referenced herein.

C. Allowable Tolerances

1. Maximum variation from plumb: 1/4” in 10’-0”, not to exceed 3/8” in 20’-0”.

2. Maximum variation from level: 1/4” in 20’-0”, not to exceed 1/2” in 40’-0”.

3. Maximum variation in linear building line from location indicated: 1/2” in 20’-0”.

1.04 Project Conditions

A. Weather Limitations: Lay no masonry7 when temperature of surrounding air has dropped below 45 degrees F., unless it is rising, and at no time when it has dropped below 40 degrees F., except with written permission from Architect.

1. When masonry work is authorized at temperatures below 40 degrees F., but above freezing, provide mortar at temperature between 70 degrees and 100 degrees F. Maintain air temperature above 40 degrees F. on both sides of masonry for 72 hours after laying.

B. Protect masonry construction from direct exposure to wind and sun when erected in ambient air temperatures of 95 degrees F. in the shade with relative humidity less than 50%.

C. Ventilation: Provide adequate ventilation during application of asphalt emulsion in enclosed spaces. Maintain ventilation until asphalt emulsion has thoroughly cured.

D. Keep walls dry during erection by covering at the end of each work period with a waterproof membrane. Similarly, protect partially completed walls not being worked on. Covering shall overhang at least 2'-0" on each side of wall and shall be anchored on each side of wall.

Part 2 Products

2.01 Manufacturers

A. Manufacturers: Subject to compliance with requirements provide products by one of the following:

1. Basis of Design; Pittsburgh Corning Corp., PC Glass Block.

2. Solaris Glass Block.

3. J. Weck Co., Weck Glass Block

B. Characteristics

1. Style: Standard

2. Pattern: Decora

3. Nominal face size: 1'-0" by 1'-0"

4. Thickness: 3-7/8"

2.02 Accessory Products

A. Mortar: Type S, colored mortar as specified in the Masonry Mortar section of these Specifications.

B. Asphalt Emulsion: Cold applied, non-asbestos, non-fibrated, adhesive, trowel applied, meeting ASTM D1227-87, type 3 or 4.

1. Acceptable Products:

a. Karnak Chemical Corporation, Karnak 100, Non-Fibrated Emulsion Coating.

b. Sonneborn Building Products Div.; ChemRex, Inc.; Hydrocide #700.

c. W.R. Meadows, Inc., Sealmastic, Type three.

C. Expansion Strips for Head and Jamb Joints: Glass fiber or polyethylene; manufacturer's standard type, 3/8" minimum thickness.

D. Panel Anchors: Minimum 20 gage, perforated steel, 2'-0" long by 1-3/4" wide; hot dip galvanized after perforating.

E. Panel Reinforcement: Ladder type consisting of nine gage longitudinal wires with welded cross wires; hot dip galvanized.

F. Galvanizing: Steel reinforcement and accessories shall be hot dip galvanized in accord with ASTM A925-97a, G60, for sheet and ASTM A116-95, Grade 60, Class I, for wire.

Part 3 Execution

3.01 Installation

A. Install glass unit masonry in accordance with manufacturer's recommendations and product data.

B. Workmanship: Install no cracked, broken, or chipped units.

1. Lay glass masonry plumb, true to line and with level courses.

2. Adjust units to final position while mortar is soft and plastic.

3. If units are displaced after mortar has stiffened, remove, clean joints of mortar, and relay with fresh mortar.

C. Reinforcement: Install reinforcement, anchors and expansion strips in accordance with glass unit masonry manufacturer's instructions and details. Install panel anchors at top, bottom and 2'-0" o.c., maximum, vertically. Install connectors at each corner and jamb, in accordance with connector manufacturer's instructions.

D. Panel Anchors: Install panel anchors to tie glass block into surrounding framework.

E. Expansion Strips: Install expansion strips in headrail jamb joints; comply with manufacturer's product data.

F. Mortar Beds

1. Lay units with full mortar coverage on horizontal and vertical joints in all courses.

2. Provide sufficient mortar on ends of units to fill head joints.

3. Where adjustment to concrete or jambs must be made after mortar has started to set, remove mortar and replace with fresh mortar.

G. Mortar Joints

1. Nominal width: 3/8".

2. Tool joints exposed in finished work when "thumb print" hard; tool concave.

3.02 Protection and Cleaning

A. Protect adjacent finished surfaces from damage or staining from this work by masking prior to application. Repair or replace surfaces damaged or stained.

B. Keep glass units free of mortar droppings and debris as work progresses. Clean using detergent and water with stiff bristle brushes. Just prior to date of Substantial Completion, clean and polish glass on both faces.

C. At completion, remove debris resulting from work, including spilled materials.

D. Protect finished exposed work from stains.

END OF SECTION

Part 1 General

1.01 Scope

A. This Section covers all items fabricated from metal shapes, plates, sheets, rods, bars or castings and all other wrought or cast metal except component parts of equipment and items covered by other sections.

B. Fabricated metal items, which are detailed on the Drawings but not mentioned specifically therein, shall be fabricated in accordance with the applicable requirements of this Section.

1.02 Factory Testing

A. Prior to delivery, all basic materials specified herein shall be tested and inspected by an approved independent commercial testing laboratory. Payment for such services will be made by the Contractor. If approved by the Engineer, certified tests performed by the manufacturer's testing laboratory at no cost to the Owner will be acceptable.

B. If so desired by the Engineer, inspection of the fabrication shall be made at the place of manufacture. Access shall be permitted to all places where the work is being done.

1.03 Submittals

Detailed shop drawings, product data sheets and erection and installation details for miscellaneous metal items shall be submitted in accordance with Section 01340 of these Specifications. Submittals shall indicate thickness, type, grade, class of metal, dimensions and shall show construction details, reinforcement, anchorage, welds, fasteners and installation with relation to other construction.

1.04 Storage and Protection

A. Store structural metals above ground on platforms or other supports and protect from weather with suitable covering. Do not permit water ponding or moisture collection on stored items.

B. Handle steelwork to prevent damage to members and to shop paint coat and to prevent accumulation of mud, dirt or other foreign materials capable of interfering with field paint application.

1.05 Quality Assurance

Structural steel manufacturers shall provide written certification to the Engineer that all materials furnished comply with all applicable requirements of these Specifications.

Part 2 Products

2.01 Materials and Construction

A. All materials shall be new and undamaged and shall conform to pertinent AISC, ANSI, ASTM or other industry standards. Unless specified otherwise in other Sections, all materials in fabricated metal items shall conform to the following requirements:

1. Structural steel shapes shall conform to ASTM A 992.

2. Structural steel tubing shall conform to ASTM A 500, Grade B.

3. Steel angles, channels, plates and bars shall conform to ASTM A 36.

4. Stainless steel shall conform to the following AISI Type 304 for sheets and plates; AISI Type 316 for bolts and stainless steel items in corrosive areas.

5. Galvanizing shall be hot dipped in accordance with Specifications for Zinc (Hot Galvanized) Coatings on Products Fabricated from Rolled, Pressed and Forged Steel Shapes, Plate, Bars and Strip ASTM A 123.

6. Gray cast iron shall conform to ASTM A 48, Class 30B.

7. Ductile iron shall conform to ASTM A 536, Grade 65-40-18.

8. Aluminum alloy shall conform to the following Aluminum Association Specifications and designations:

   6061-T6 Structural Shapes, Tubes and Pipes in Corrosive Areas, Sheets, Plates, Wire, Rods, Bars, Bolts and Screws

   6066-T6 Weldings and Extrusions

   6151-T6 Forgings and Forging Stock

9. High strength steel bolts, nuts and washers shall conform to ASTM A 325.

10. All embedded anchor bolts or anchor bolt materials shall conform to ASTM A36.

11. Electrodes for welding structural steel shall conform to “Specification for Mild-Steel Covered Arc-Welding Electrodes”, AWS A5.1, E-70 series. Electrodes for welding aluminum shall conform to AWS A5.10.

B. Checkered Floor Plates: Unless otherwise shown, checkered floor plates shall be 6061-T6 aluminum alloy with raised diamond pattern on the upper surface. Floor plate shall have a minimum thickness of 1/4-inch and shall be designed for a deflection of not more than 1/300 of span under a uniform load of 100 pounds per

square foot. However, in no case shall the thickness of the floor plates be less than that shown on the Drawings for the specified clear span.

C. Welding and Brazing - General

1. All welds shall be sound and free from embedded scale and slag. All butt welds shall be continuous and where exposed to view shall be ground smooth. All continuous welds shall be gas and liquid-tight. Intermittent welds shall have an effective length of at least 2-inches and shall be spaced not more than 6-inches apart.

2. All welding of steel and aluminum, including materials, welding techniques, general safety practices, appearance and quality of welds and methods of correcting defective work, shall conform to the latest requirements of AWS Specifications. Structural steel welding shall conform to the requirements of the AWS Structural Welding Code. The general recommendations and requirements of the AWS Structural Welding Code shall also apply to welded aluminum structures. The welding process and welding operators shall meet qualification tests and welding performance tests in accordance with the latest provisions of ASME Boiler and Pressure Vessel Code, Section IX, Welding and Brazing Qualifications. Welding process and qualification procedures for welding of pipe shall conform to the latest requirements of ANSI B31.1, Section 327, Welding and Section 328, Brazing and Soldering. All costs associated with the qualification or testing of welders and welding operators shall be borne by the Contractor.

3. The Owner may inspect any weld by radiographic or other means. Welds not in accordance with the requirements specified herein shall be repaired or replaced at the Contractor's expense. Excessive porosity, non-metallic inclusions, lack of fusion, incomplete penetration and cracking shall constitute grounds for rejection of welds.

D. Shop Fabrication

1. Structural steel shall be fabricated in conformity with dimensions, arrangement, sizes and weights or thicknesses shown on the Drawings or stipulated in the Specifications.

2. All members and parts, as delivered and erected, shall be free of winds, warps, local deformations or unauthorized bends. Holes and other provisions for field connections shall be accurate and shop checked, so that proper fit will result when the units are assembled in the field.

E. Galvanizing

1. All galvanizing shall be done by the hot-dip process, after fabrication in conformity with requirements of ASTM A 123, A 153, A 384 and A 385. Articles to be galvanized shall be pickled before galvanizing.

2. Areas of galvanizing damaged by welding or burning or otherwise damaged shall be thoroughly stripped and cleaned and recoated with zinc to the required thickness by the hot-dip process.

3. Galvanized articles shall be free from uncoated spots, blisters, flux, black spots, dross, projections and other defects not consistent with acceptable galvanizing practice.

4. Zinc and cadmium plating shall be subject to visual examination to determine uniformity of coating. The Engineer may require that the coating uniformity be tested in accordance with ASTM A 239.

Part 3 Execution

3.01 Installation

A. Structural Steel

1. General: Except as otherwise specifically noted on the Drawings, or specified herein, all materials and work for structural steel and miscellaneous metal work shall be in conformity with applicable provisions of the latest edition of the AISC "Steel Construction Manual" and AISC "Specification for the Design, Fabrication and Erection of Structural Steel for Buildings".

2. Connections

a. Connections not specifically detailed on the Drawings shall be as defined in Tables I and III, Framed Beam Connections, in the seventh edition of the AISC manual. The shop fabricated portion of structural connections may be bolted or welded. Except for connections detailed on the Drawings or specified otherwise, field connections shall be made with ASTM A 325 high strength bolts.

b. Connections for miscellaneous metal work not included in the AISC definition of structural steel may be made with ASTM A 307 bolts. Bolts shall be equipped with self-locking nuts or lock washers.

c. High strength bolts shall be installed using turn-of-nut tightening as described in "Specifications for Structural Joints Using ASTM A 325 or A 490 Bolts" as set forth in the AISC manual. Beveled washers shall be used when the bearing faces of bolted parts have a slope of 1:20 or greater with respect to a plane perpendicular to the bolt axis. A platform or other means of access shall be provided at each field connection and shall be left in place until the connection has been inspected by the Engineer.

d. Field welded connections will not be acceptable for structural steel unless shown on the Drawings or specifically permitted by the Engineer. Where structural or miscellaneous steel connections are welded, all butt and

miter welds shall be continuous and where exposed to view shall be ground smooth. In addition, intermittent welds shall have an effective length of at least 2-inches and shall be spaced not more than 6-inches apart.

e. Field Erection: Before assembly, surfaces to be in contact with each other shall be thoroughly cleaned. All parts shall be assembly accurately as shown on the Drawings. Light drifting to match unfair holes will not be permitted. Any enlargement of holes necessary to make connections in the field shall be done by reaming with twist drills. Enlarging holes by burning is absolutely prohibited.

B. Structural Aluminum

1. General Except as specifically noted on the Drawings, or specified herein, all materials and work for structural aluminum shall conform with the applicable provisions of the latest edition of “Specifications for Aluminum Structures”, published by the Aluminum Association, Inc., New York, New York.

2. Lay Out: Hole centers may be center punched and cutoff lines may be punched or scribed. Center punching and scribing shall not be used where such marks would remain on fabricated material. A temperature correction shall be applied where necessary in the layout of critical dimensions. The coefficient of expansion shall be taken as 0.000013 per degree F.

3. Cutting: Material 1/2-inch thick or less shall be sheared, sawed, or cut with a router. Material more than 1/2-inch thick shall be sawed or routed. Cut edges shall be true and smooth, and free from excessive burrs or ragged breaks. Edges or plates carrying calculated stresses shall be planed to a depth of 1/4-inch, except in the case of sawed or routed edges of a quality equivalent to a planed edge. Re-entrant cuts shall be avoided wherever possible. If used, they shall be filleted by drilling prior to cutting. Flame cutting of aluminum alloys is not permitted.

4. Heating: Structural material shall not be heated except as provided herein. Material may be heated to a temperature not exceeding 400 degrees F for a period not exceeding 30 minutes to facilitate bending. Such heating shall be done only when proper temperature controls and supervision are provided to ensure that the limitations on temperature and time are carefully observed. The Engineer shall be so informed if this method is to be used.

5. Punching, Drilling and Reaming: Rivet or bolt holes may be punched or drilled to finished size before assembly. The finished diameter of holes for unfurnished bolts shall be not more than 1/6-inch larger than the nominal bolt diameter. All holes shall be cylindrical and perpendicular to the principal surface. Holes shall not be drifted in such a manner as to distort the metal. All chips lodged between contacting surfaces shall be removed before assembly.

6. Bolting: All bolts for bolting aluminum shall be Type 304 or 316 stainless steel as specified herein.

7. Welding

a. Dirt, grease, forming or machining lubricants or any organic materials shall be removed from the areas to be welded by cleaning with a suitable solvent or by vapor degreasing. Additional operations to remove the oxide coating just prior to welding are required when the inert gas tungsten arc welding method is used. This may be done by etching or scratch brushing. The oxide coating need not be removed if the welding is done with the automatic or semi-automatic inert gas shielding metal arc. Suitable edge preparation to assure 100 percent penetration in butt welds shall be used. Oxygen cutting shall not be used. Sawing, chipping, machining or shearing may be used.

b. Any welding of aluminum shall be done using a non-consumable tungsten electrode with filler metal in an inert gas atmosphere (TIG) or using a consumable filler metal electrode in an inert gas atmosphere (MIG). No welding process that requires the use of a welding flux shall be used unless prior approval has been obtained from the Engineer. Preheating for welding is permissible provided the temperature does not exceed 400 degrees F for a total time of 30 minutes. Welding of any structure which is to be anodized shall be done using filler alloy rods which will not discolor when anodized.

c. The welding process and welding operators shall both meet a qualification test conforming to the qualification methods described in the ASME Boiler and Pressure Vessel Code, Section IX, Welding Qualifications.

3.02 Field Painting

A. Aluminum surfaces to be placed in contact with wood, concrete, or masonry construction shall be coated with bitumastic coating.

B. Where aluminum surfaces come in contact with dissimilar metals, except stainless steel, the aluminum surfaces shall be kept from direct contact with said metal by the use of neoprene gaskets, 10 mil polyethylene film or insulating washers. Paint or galvanizing will not be considered as adequate protection.

C. Unpainted aluminum surfaces shall be cleaned of all fabrication marking, grease, dirt and oil. Anodized surfaces shall be cleaned with a mild soap and water solution and no acid, caustic or abrasive cleaning agents shall be used.

D. Structural and miscellaneous metals shall be cleaned, shop primed and painted in accordance with the requirements of Section 09900 of these Specifications.

3.03 Inspection and Testing

Materials or workmanship not conforming to the provisions of these Specifications shall be rejected at anytime defects are found during the progress of the work.

3.04 Cleaning

Prior to the acceptance of the work under this Section, thoroughly clean all installed materials, equipment and related areas in accordance with the requirements of Section 01710 of these Specifications.

END OF SECTION

Part 1 General

1.01 Scope

Completely furnish and install the steel roof decking and accessories as shown and indicated on the Drawings and as specified in this Section.

1.02 Qualifications

For purposes of designating type and quality for work under this Section, Drawings and Specifications are based on products manufactured or furnished by a member firm of the Steel Deck Institute with design properties determined in accordance with the "Light Gauge Cold-Formed Steel Design Manual of the AISI".

1.03 Design Requirements

A. The publications listed below form a part of these Specifications:

1. Steel Deck Institute (SCI)

   SDI-07 Design Manual for Composite Decks, Form Decks and Roof Decks

   SDI-Sept. 04 Diaphragm Design Manual, Third Edition

2. American Society for Testing and Materials (ASTM)

   A 525-81 General Requirements for Steel Sheet, Zinc-Coated (Galvanized) by the Hot-Dip Process

3. American Welding Society (AWS)

   D1.1-82 Structural Welding Code, Steel

   D1.3-80 Welding Sheet Steel in Structures

4. Military Specification (Mil. Spec.)

   DOD-P-21035A Paint, High Zinc Dust Content, Galvanizing Repair (Metric)

5. American Iron and Steel Institute (AISI)

   Specification for the Design of Cold-Formed Steel Structural Members (1986 Edition)

1.04 Submittals

A. Shop Drawings: Shop drawings shall be submitted for approval and shall include deck types, locations and necessary details of decking units, accessories and supporting members, required section properties, sizes and locations of holes to be cut and reinforcement to be provided, location and sequence of welded and fastener connections and the manufacturer's erection instructions. Shop drawings shall show all steel roof decking support framing.

B. Manufacturer's Data: Submit for review by the Engineer three copies of manufacturer's data on deck system to be furnished for the Project.

1.05 Storage and Protection

A. The Contractor shall coordinate delivery of materials. Care shall be exercised at all times to avoid damage through handling during unloading, storing and erection.

B. The Contractor shall provide on-site storage for deck sheets and accessories in accordance. Steel decking not promptly erected shall be stored off the ground with one end elevated for drainage and shall be protected from the weather by waterproof covering.

1.06 Quality Assurance

A. The material to be furnished shall be subject to inspection and tests in the field. Inspection and tests in the field will be conducted by a testing laboratory employed by the Owner.

B. The manufacturer shall provide written certification that all materials furnished comply with all applicable requirements of these Specifications.

Part 2 Products

2.01 Acceptable Manufacturers

All steel roof decking shall be manufactured by Consolidated Systems, Rollform Products, Mac-Fab Products, Epic Metals Corporation, Inryco Inc. or United States Steel Corporation.

2.02 Materials and Construction

A. General: Galvanized steel sheets shall conform to ASTM A 525 and AISI Specifications, with a minimum yield point of 33,000 psi. Galvanizing shall be not less than 0.40 ounce per square foot.

B. Fabrication

1. Design: Roof decking shall be deep-rib, nestable side-lap type deck, of sizes and gauges shown on the Drawings to span three or more supports with flush ends.

2. Deck units shall be factory-cut square ends with field skew saw cutting to match diagonal framing.

2.03 Accessories

A. The manufacturer's standard type accessories shall be furnished as necessary to complete the roof deck installation. Metal accessories shall be of the same material as the decking and have minimum gauge as follows:

1. Saddles: 18 gauge.

2. Welding Washers: 16 gauge.

3. Sump Pans at Drains: 14 gauge.

4. Cant Strip: 22 gauge.

5. Other Metal Accessories: 20 gauge, unless otherwise indicated.

Part 3 Execution

3.01 Installation

A. Decking shall be placed in accordance with approved shop drawings.

B. Erection of decking and accessories shall be in accordance with the SDI "Steel Roof Deck Design Manual" and the approved shop drawings. Damaged decking and accessories and units with burned holes shall not be installed. The deck units shall be placed on secured supports, properly adjusted and aligned at right angles to supports before being permanently secured in place. Locate end laps only over supports, with a minimum lap of 2-inches. The deck shall not be used for storage or as a working platform until the units have been secured in position. The maximum uniform distributed storage load shall not exceed 10 pounds per square foot.

C. The deck units shall be welded to the steel framework at ends of units and at intermediate supports by fusion welds not less than 1/2-inch diameter, spaced not more than 8-inches across width of deck units and at least one weld in each flute joined to form a continuous diaphragm. Holes and similar defects will not be acceptable. Side laps of adjacent units shall be fastened between supports by screws

at intervals not exceeding 18-inches. For beams parallel to deck spans, the maximum spacing of welds shall not be greater than 16-inches. Where two units abut, each unit shall be welded to the steel framing. Welding pattern for the deck diaphragm shall be as indicated on the Drawings.

D. Perform all welding in accordance with AWS D1.3 using methods and electrodes as recommended by the manufacturer of the base metal alloys being used. Welds shall be made only by operators previously qualified by test prescribed in AWS D1.3 to perform the type of Work required. Location, size and spacing of welds shall be as specified above.

E. Holes and other openings required shall be drilled or cut, adequately reinforced and framed as necessary for rigidity and sufficient load-carrying capacity as approved by the Engineer.

3.02 Field Painting

All welds, weld scars and abraded shop coats shall be cleaned by chipping and wire brushing and touched-up, after erection, with a galvanized repair coating conforming to Mil. Spec. DOD P-21035A.

3.03 Protection of Deck

Areas of high traffic volume shall be protected by plywood flooring over the metal deck. The metal deck shall be protected against undue abuse during construction when the metal deck is used as a platform. The Contractor shall insure that the metal deck configuration and structural integrity is maintained until the work is completed. Damaged deck must be replaced at no additional cost to the Owner.

END OF SECTION

Part 1 General

1.01 Scope

The work under this Section includes, but is not necessarily limited to, the furnishing and installation of all miscellaneous metals and related items as indicated on the Drawings, herein specified and as necessary for the proper and complete performance of this work.

1.02 Submittals

A. Make all submittals in accordance with Section 01300 of these Specifications.

B. Shop Drawings

1. Submit shop drawings of all items to be furnished.

2. Shop drawings for steel members shall be as specified in Section 01300 of these Specifications.

3. Submit plan locating embedded connections in cast-in-place concrete footings for handrails. (Precast supplier shall furnish locations unless noted otherwise on the Drawings).

1.03 Division of Work

A. General: The following list of items to be furnished under this Section is placed here to aid the various trades in estimating their portion of the work. It is not a full and complete list and does not relieve the Contractor from providing a totally complete Project including all miscellaneous items.

B. Miscellaneous Metal Items

1. Handrails

2. Guardrails

1.04 Quality Assurance

A. Qualifications: For fabrication and erection of the work of this Section, use only personnel completely trained and experienced in the type of work being performed and thoroughly familiar with the original design and the approved shop drawings.

B. Codes and Standards: In addition to complying with all pertinent codes and regulations, comply with applicable standards for materials design and construction of the following:

1. American Society for Testing Materials

2. American Institute of Steel Construction

3. American Iron and Steel Institutes "Specifications for the Design of Light Gage Cold Formed Steel Structural Members"

4. Occupational Safety and Health Act

5. American Welding Society

6. National Association of Architectural Metal Manufacturers

C. Conflicting Requirements: In the event of conflict between pertinent codes and regulations and the requirements of the referenced standards or these Specifications, the provisions of the more stringent shall govern.

Part 2 Products

2.01 Materials

A. General: Materials shall be new, top quality of their respective kinds, standard sizes and fabricated in a shop whose principal business is manufacturing the items specified in this Section. Materials shall be free of defect impairing strength, durability, or appearance. Miscellaneous anchors, plates, clips, bolts, nuts, and the like shall be provided as necessary to complete the work, whether or not they appear on the Drawings or in the Specifications.

B. Steel shall conform to ASTM A 36.

C. All other materials not specifically described but required for a complete and proper installation of the work of this Section, shall be new, first quality of their respective kinds, and as selected by the Contractor subject to approval of the Project Landscape Architect.

2.02 Fabrication

A. General

1. Workmanship: Install items square and level, accurately fitted and free from distortion and defects.

2. Temporary Bracing: Make provision for erection stresses by temporary bracing; keep work in alignment.

3. Welding: Welding shall be continuous along entire area of contact. Welding shall be in accordance with "Code for Welding in Building Construction" of the American Welding Society. Grind exposed welds smooth and flush with adjacent finished surfaces.

4. Painting: Ladders and handrails shall be powder coat finished as per Drawings.

5. Items fabricated from structural steel members which are to be architecturally exposed shall be given special attention for material selection with respect to rolling tolerances, surface finish, and straightness.

6. Normal structural steel fabrication tolerances will not be acceptable where in conflict with the intent and requirements of this Section.

7. Straightness tolerance, additive to deflection, shall not exceed ±1/16-inch to 10 feet.

8. All cope, mitre, and butt caps on exposed surfaces shall be made to the closest possible tolerances consistent with metal shop equipment and practice in order to provide a pleasing appearance.

9. Galvanizing: Items specified to be hot-dip galvanized shall be coated after fabrication.

10. Fastenings shall be concealed where practicable. Thickness or metal and details of assembly and supports shall give ample strength and stiffness. Joints exposed to weather shall be formed to exclude water. Provide holes and connections for the Work of other trades.

Part 3 Execution

3.01 General

A. Workmanship: Install items square and level, accurately fitted and free from distortion and defects.

B. Coordination: Supply to appropriate trades, items requiring to be cast into concrete, embedded in masonry, complete with necessary setting templates.

C. Touch-Up: After installation, touch-up field welds and scratched and damaged surfaces.

D. Protection: Where required, provide approved protection against galvanic action between contacts of dissimilar metals or situations that will cause deterioration of metals in contact or associated in any way.

3.02 Cleaning

Prior to acceptance of the work of this Section, thoroughly clean all installed materials and related areas in accordance with Section 01700 of these Specifications.

END OF SECTION

Part 1 General

1.01 Scope

A. The work covered by this Section includes furnishing all labor, materials and equipment required to fabricate and install all rough carpentry work as described herein, shown on the Drawings or necessary for proper completion of the work.

B. The Contractor shall properly coordinate the work of other trades to ensure accurate placement of anchors, inserts, receptacles, cutouts and other items.

1.02 Storage and Protection

A. All lumber shall be protected and kept under cover, both in transit and at the job site. Material shall not be delivered unduly long before it is required for proper performance of the work.

B. All materials, when delivered to the job site, shall be stacked to ensure ventilation and protection from the weather. Lumber shall not be stored within a structure during the process of any wet work being done or until the wet work is reasonably dry.

1.03 Quality Assurance

A. The following grading rules and standards, latest editions, shall apply to all materials furnished under this Section:

1. Softwood Lumber - Standard grading and dressing rules approved under U.S. Product Standard PS 20.

2. Southern Pine - Standard grading rules as published by Southern Pine Inspection Bureau.

3. Hardwoods - Standard grading rules as published by National Hardwood Lumber Association.

4. Redwood - Standard specifications for grades of California redwood lumber as published by Redwood Inspection Service.

5. Douglas Fir - Standard grading rules as published by West Coast Lumber Inspection Bureau or the Western Wood Products Association.

6. Douglas Fir Plywood - U.S. Product Standard PS-1 and the grading rules of the American Plywood Association.

7. Southern Pine Plywood - U.S. Product Standard PS-1 and the grading rules of the American Plywood Association.

8. Hardwood Plywood - U.S. Product Standard PS-51 or U.S. Commercial Standard CS-35.

B. Each piece of lumber or plywood shall bear the grade and trademark of the appropriate lumber inspection agency and a mark of mill identification. Plywood shall bear the DFPA grade and trademark of the American Plywood Association.

Part 2 Products

2.01 Framing and Rough Lumber

A. Wood for furring, blocking and framing for all permanent work, unless specified otherwise, shall be construction grade Douglas fir of full and square dimensions, free of large or loose knots, shakes, wains or saps. Maximum moisture content shall not exceed 19 percent.

B. All framing, blocking, etc., in contact with concrete or masonry construction shall be pressure treated with a water soluble salt conforming to AWPA Standard P-5 using a process conforming to AWPA Standard C2 and shall bear the AWPB LP-2 or LP-22 quality mark. Pressure treated wood shall be paintable, stainable, oil free and odorless. Pressure treated plywood shall conform to AWPA Standard C9.

C. Where fire retardant treated wood is specified or shown on the Drawings, lumber and plywood shall be impregnated with a special fire retardant chemical. Fire retardant treated wood shall have a fire hazard classification of less than 25 for flame spread, fuel contributed and smoke generated in accordance with ASTM E 84 and shall be UL designated as FR-S. For exterior grade fire retardant treated wood, there shall be no change in classification following exposure to the standard rain test in accordance with ASTM D 2898. Following treatment, fire retardant treated wood shall be kiln dried to a moisture content of not more than 19 percent for exterior grade and 15 percent for interior grade. Each piece of lumber or plywood shall bear the approved UL and Factory Mutual labels for fire performance rating. Allowable design stresses of fire retardant treated wood shall not exceed 90 percent of those published by NFPA.

Part 3 Execution

3.01 Installation

A. All materials shall be installed by an erector of proven experience and shall be accomplished in a first class manner. Any damages to exposed members shall be repaired to the satisfaction of the Engineer or damaged members shall be replaced. All installation work shall conform to AITC Standard 105.

B. Furnish dressed wood nailing strips and wood blocking of the sizes indicated or required and install on or in concrete or masonry as required for the attachment of carpentry and the work of other trades. All grounds and nailing strips shall be anchored to the masonry with countersunk 1/4-inch toggle bolts or other type anchors not over 24-inches on center. Grounds shall be set rigid in perfect alignment and shall be trued

with a long straight edge. Wood plates shall be anchored to concrete slabs using concrete nails or power actuated fasteners.

C. Framing lumber and other rough work shall be properly framed, closely fitted, accurately set to required lines and levels and rigidly secured in place. Special framing or construction not explicitly shown or specified shall be provided as required to complete the work in the best and most workmanlike manner. Nailing and spiking shall be done in a thoroughly workmanlike manner, with nails of ample size, using spikes larger than 12 penny where practical. Members shall be framed for the passage of pipes and ducts to avoid cutting structural members.

D. Brush cut surfaces of pressure treated lumber with a heavy coat of preservative (same preservative used in original application).

3.02 Cleaning

Prior to acceptance of the work of this Section, thoroughly clean all installed materials and related areas in accordance with Section 01710 of these Specifications.

END OF SECTION

Part 1 General

1.01 Scope

The work covered by this Section includes furnishing all labor, materials and equipment required to fabricate and install all fiberglass grating, stairs, treads, supports and handrails as described herein, shown on the Drawings or necessary for proper completion of the work. All fiberglass products herein specified shall be furnished with ultraviolet protective agents.

1.02 Submittals

A. Submit complete shop drawings and engineering data in accordance with the requirements of Section 01340 of these Specifications.

B. Submit samples of fiberglass grating proposed for use on the Project.

C. Shop drawings shall indicate the materials, arrangement, thickness, size of sections, construction, fastenings, clearances, assembly and erection details, built-in hardware and necessary connections to work of other trades. Only the general dimensions and elevations are shown on the Drawings. The manufacturer/supplier shall provide detailed layout, dimensions, assembly and detailed connections in the shop drawings.

D. Submit complete engineering design data and design information for all fiberglass stairs. Data and design information shall clearly illustrate the stair profile, layout and loads considered. Submit all information concurrently with the shop drawings.

Part 2 Products

2.01 Acceptable Manufacturers

Open and solid plank grating shall be manufactured by Fibergrate Composite Structures, Ohio Gratings, Strongwell, or Delta Composites.

2.02 Open Fiberglass Grating

A. Open FRP grating shall be fiberglass roving reinforced polyester constructed to provide complete wetting of the glass by the resin. A premium grade isophthalic polyester resin meeting a flame spread rating of ASTM E 84, Class 3, shall be used. All components shall be suitable for immersion service with 12.5% sodium hypochlorite.

B. All open fiberglass grating shall have grid dimensions of 1-1/2-inches depth x 1-1/2 x 1-1/2-inches mesh pattern. The grating shall be molded, of single piece construction such that reinforcing glass of bearing bars are interwoven with the cross bar glass.

C. Length and width shall equal required dimensions within 1/4-inch. Diagonal dimensions of any square shall be equal within 1/4-inch.

D. The tops of all bars and members shall be in the same plane.

E. All grating walking surfaces shall have anti-skid surfaces. Angular silica particles shall be integrally embedded in laminate in all walking surfaces.

F. Grating shall be easily installed and cleaned, non-sparking and self-draining. Grating shall be capable of field fabrication with a masonry saw. All cut edges shall be sealed with resin as recommended by the manufacturer.

G. Grating panels for trenches shall be simply supported by FRP angles on all sides of the opening. The gratings shall be of the type that can be made in panels of the widths and lengths appropriate to the openings shown on the Drawings. Panels shall be furnished in sizes that are easily handled.

H. The top surface of all bars shall be flush and all gratings shall lie flat with no tendency to rock when installed. Cross bars and edge bars of adjacent panels shall align for neatness. All bearing bars shall be parallel. Cross bars shall be cut off flush with outside face of side bars.

I. The maximum allowable deflection permissible over a 36-inch span at a uniform loading of 150 psf shall be 0.360-inch. Manufacturers are permitted to use opaque pigment if required to meet the deflection and/or loading criteria.

2.03 Shelf Angles

A. Main bearing bars shall be supported by FRP shelf angles of the size and thickness required to obtain flush surfaces for gratings, angle frames and surfaces in which the angle frame is embedded. There shall not be more than 1/4-inch clearance between the ends of the grating panels and the inside vertical face of the shelf angle.

B. Unless otherwise shown, openings to be covered with grating shall be bound on all four sides with a continuous shelf angle frame having FRP welded corners and sufficient strap anchors for anchorage into the concrete.

C. Where changes in channel direction, openings for gates, ends of grating runs, etc., prohibit adequate support for grating, additional FRP cross angles shall be provided by the Contractor for additional seating surface.

Part 3 Execution

3.01 Installation

A. The Contractor shall furnish FRP products as herein specified, installed by persons familiar with, and experienced in the installation of FRP gratings, stairs, treads, supports and handrails.

B. Gratings shall be installed in accordance with the manufacturer's recommendations and instructions.

C. Gratings shall have no tendency to shift, rock or rattle and shall not exhibit excessive deflection under normal foot traffic.

END OF SECTION

Part 1 General

1.01 Scope

A. The work covered by this Section consists of furnishing all labor, equipment and material required to apply all membrane waterproofing and related work as described herein and/or shown on the Drawings.

B. In general, and unless otherwise specified or shown on the Drawings, membrane waterproofing shall be applied to the exterior surfaces of all concrete walls adjoining a dry basement or dry pit and openings and penetrations at the exterior face of the masonry units located within the air space of the masonry wall.

1.02 Submittals

A. Complete shop drawings and engineering data in the form of manufacturer's brochures and installation instructions shall be submitted to the Engineer in accordance with the requirements of Section 01340 of these Specifications.

B. Samples of every type of waterproofing material proposed for use with this Project shall be submitted to the Engineer. If requested by the Engineer, additional specimens of the type, nature, and quantity requested shall be supplied to the Engineer by the Contractor.

1.03 Storage and Protection

A. All waterproofing materials shall be stored and protected in accordance with the requirements of Section 01611 of these Specifications and with the requirements specified by the manufacturer of the waterproofing materials.

B. The shelf life for any waterproofing materials, as recommended by the materials manufacturer, shall not be exceeded. Such out-of-date materials shall be discarded and new materials furnished by the Contractor.

1.04 Quality Assurance

A. The waterproofing work shall be performed by a contractor who is regularly engaged and specializes in work of the character required by the Contract Documents and in the application of the materials specified here. Material shall be delivered to job in manufacturer's original unopened containers with manufacturer's brand and name clearly marked thereon.

B. The materials and methods shall be as specified herein, unless they are contrary to the manufacturer's directions or to approved trade practice, or unless the Contractor believes they will not produce a watertight job which the Contractor will warrant as required. Where any of the above conditions occur, the Contractor shall notify the Engineer in writing. Deviation from the procedure specified will be permitted only

upon the Engineer's written approval and providing the work is warranted by the Contractor as specified.

C. If, prior to beginning work, the Contractor does not notify the Engineer, in writing, of any proposed changes it will be assumed that the Contractor agrees that the materials and methods specified will produce the results desired, and that the Contractor will furnish the required warranty.

1.05 Warranty

A. This Contractor shall furnish the Owner a written two year warranty, to take effect on the date of final acceptance, in which the Contractor agrees to correct, by means of repair or replacement at the Contractor's own expense, any and all defective material and/or workmanship resulting in the execution of this portion of the work and to repair and replace any and all materials damaged as a result of that defective work.

B. The warranty shall in addition conform with the requirements of Section 01740 of these Specifications with the exceptions noted above.

Part 2 Products

2.01 Acceptable Manufacturers

A. Buried waterproofing membrane shall be Bituthene 3000 by Grace Construction Products, subject to Specification requirements.

B. Tank waterproofing membrane shall be "Pedagard II" by Neogard or "Scotch-Clad P" by 3M Company.

C. Above grade waterproofing membrane shall be “Perm-A-Barrier” Wall Membrane by Grace Construction or approved equal.

2.02 Materials

A. Buried Waterproofing Membrane: The liquid membrane shall be an unadulterated polyurethane membrane and shall meet ASTM C 836. The cured membrane shall have the following minimum properties:

Property	Minimum Value	Test Method
Elongation	500%	ASTM D 412
Tensile Strength	200 psi	ASTM D 412
Recovery from 350% Elongation	90%	ASTM D 412
Tear Resistance	65 psi	ASTM D 624
Adhesion Strength (Unprimed Concrete)	15 psi	TT-S-00227E

Property	Minimum Value	Test Method
Water Vapor Permeance at 38° C	0.15 metric perms-cm	ASTM E 96 (Procedure E Modified)

B. Tank Waterproofing Membrane: Tank waterproofing membrane shall be an unadulterated polyurethane material, suitable for 100 percent immersion and resistant to ultra-violet exposure and shall meet ASTM C 836. Material, for use in potable water tanks, must have NSF approval. Membrane shall have the following minimum properties:

Property	Minimum Value	Test Method
Elongation	500%	ASTM D 412
Tensile Strength	175 psi	ASTM D 412
Tear Resistance	50 psi	ASTM D 624
Adhesion Strength	15 psi	TT-S-00227E
Water Vapor Permeance	0.10 metric perms-cm	ASTM E 96 (Procedure E Modified)

C. Joint Backing: Joint backing shall be closed cell polyethylene as recommended by the membrane manufacturer.

D. Sealant: Sealants shall be as specified in Section 07900 of these Specifications, however the Contractor shall be responsible to ensure that sealant used is compatible with the waterproofing membrane. Should the membrane manufacturer recommend a different sealant type than specified in said Section 07900 the Contractor shall obtain the Engineer's approval both of the type of sealant and the application procedure proposed to be used.

E. Protection Boards: Premoulded bitumen composition board for buried membranes shall be 1/8-inch nominal thickness board equal to those as manufactured by Carey or Meadows. Board shall be compatible with the membrane material.

Part 3 Execution

3.01 Environmental Conditions

A. Ambient temperature shall be a minimum of 40 degrees F and rising.

B. Adequate ventilation shall be provided during the application and the curing period.

3.02 Protection

A. Keep products away from sparks and open flame.

B. Check material label for specific cautions.

3.03 Preparation

A. Concrete

1. No oil or resin type form release agents or special curing compounds shall be used for concrete to receive membrane cover. Only form release agents approved by the membrane manufacturer shall be used.

2. The Contractor shall clean and fill concrete surfaces in strict conformance with membrane manufacturer's specifications.

3. Tank walls that are to receive waterproofing shall be acid etched and primed in addition to filling and cleaning in accordance with membrane manufacturer's recommendations.

4. Concrete shall have a full 28 day cure time and be completely dry before application of membrane.

B. Coordination: Prior to installation of waterproofing, the Contractor shall arrange a meeting between the Contractor, Engineer, the membrane manufacturer's representative and the membrane applicator to verify all conditions and approve the concrete preparation procedures.

C. Manufacturer's Recommendations: The membrane manufacturer's recommendation shall be followed pertaining to caulking of joints and cracks, preparation and flashing of non-concrete surfaces and penetrations, and other preparation work. Expansion joints and working crack surfaces shall be the manufacturer's standard design unless shown otherwise on the Drawings or in these Specifications.

3.04 Application

A. Membrane manufacturer's specifications and recommendations shall be strictly observed.

B. The finished membrane thickness (excluding protection boards) shall be 60 $\pm$5 mils.

C. Application shall be with a minimum of two coats.

D. A protective cover board as previously specified shall be installed prior to backfilling to protect buried membranes from rupture. Contractor shall exhibit care in backfilling to prevent large materials from resting against wall and to prevent abrasion or other damage to the wall.

E. Buried waterproofing membrane shall be used for all underground waterproofing that will be backfilled. Tank waterproofing membrane shall be used for waterproofing interior tank walls.

F. The top waterproofing membrane edge in tanks and other edges exposed to view shall be masked to form a straight, clean edge.

3.05 Field Quality Control

A. Before the material attains final set, verify the applied thickness by use of a mil-thickness gauge as the work progresses. Take a reading every 100 square feet of surface area. Where readings indicate a thickness less than specified, immediately apply additional membrane to produce required thickness. The gauge shall be furnished by the applicator.

B. Visually inspect entire waterproofed area for voids, damage or rupture. Repair as required to the satisfaction of the Engineer.

3.06 Cleaning

Prior to acceptance of the work of this Section, thoroughly clean all installed materials and related areas in accordance with the requirements of Section 01710 of these Specifications.

END OF SECTION

Part 1 General

1.01 Scope

A. The work under this Section includes, but is not necessarily limited to, the furnishing and installation of all dampproofing as indicated on the Drawings, herein specified and as necessary for the proper and complete performance of this work.

B. The bituminous dampproofing materials specified herein shall be surface applied as follows: Apply to concrete masonry units behind brick as indicated on the Drawings.

C. Provide all labor, materials, equipment and appliances as required for the proper installation of dampproofing as follows:

1. Prepare all surfaces as specified herein to receive dampproofing.

2. Provide dampproofing at all vertical and horizontal surfaces shown on the Drawings.

3. The manufacturer shall provide all certifications, test data, affidavits or samples requested by the Engineer.

4. Perform all installations to comply with local rules, ordinances and regulations, OSHA Requirements and EPA Statutes complying with environmental protection.

5. Perform all installations in accordance with the approved construction progress schedule or at such times necessary for the orderly and expeditious completion of the Project.

6. Upon completion of dampproofing, remove all waste or rubbish resulting from dampproofing operations and all equipment used for same.

1.02 Submittals

A. General: Submit each item in this Article according to the Conditions of the Contract.

B. Product data for each type of product specified, including data substantiating that materials comply with requirements for each dampproofing material specified. Include recommended method of application, and installation instructions, recommended primer, number of coats, coverage or thickness, including rates of application for each type specified, and recommended protection course.

1. Certification by dampproofing manufacturer that products supplied comply with local regulations controlling use of volatile organic compounds (VOCs).

1.03 Product Handling

A. Protection: Use all means necessary to protect dampproofing materials before, during and after installation and to protect the installed work and materials of all other trades, contiguous to the dampproofed surfaces. Packaged containers shall be stored on wood skids, 6-inches off the ground and covered with heavy plastic sheeting which shall remain in place at all times.

B. Replacement: All broken containers and their contents shall be removed from the premises, discarded in a legal fashion and replaced with new materials at no additional cost to the Owner.

1.04 Coordination

A. Review all Drawings and details of installations of other adjoining materials and cooperate with the respective trades.

B. The applicator's particular attention is directed to the requirement to properly prepare surfaces for the attachment of other materials and to chip out and repack surfaces at all attachments.

1.05 Quality Assurance

A. Installer Qualifications: Engage an experienced installer who has completed dampproofing similar in material, design, and extent to that indicated for this Project and with a record of successful in-service performance.

B. Single-Source Responsibility: Obtain primary dampproofing materials and primers from one source and by a single manufacturer. Provide secondary materials only as recommended by manufacturer of primary materials.

1.06 Project Conditions

A. Substrate: Proceed with dampprofing only after substrate construction and penetrating work have been completed.

B. Weather Limitations: Proceed with dampproofing only when existing and forecasted weather conditions will permit work to be performed according to manufacturer's recommendations and warranty requirements.

C. Ventilation: Provide adequate ventilation during application of dampproofing in enclosed spaces. Maintain ventilation until dampproofing has thoroughly cured.

1.07 Warranty

Furnish a written warranty, warranting materials and workmanship for a period of five years after acceptance of the work of this Section and binding the Contractor to repair

and make good, at no additional cost to the Owner, all defects which appear during this period.

Part 2 Products

2.01 Acceptable Manufacturers

A. Subject to compliance with requirements, provide products by one of the following:

1. Celotex Corp., Flat Topp Emulsion

2. Karnak Chemical Corporation, Karnak 220 Fibrated, asbestos-free

3. Lambert Corp., Waterban 60 SM

4. Sonneborn Building Products Div.; ChemRex, Inc.; Hydrocide #700B Semi-Masts

2.02 Materials

A. Characteristics: Non-asbestos, fibrated, mineral colloid asphalt emulsion meeting ASTM D1227-87.

B. Primer: Type recommended by dampproofing manufacturer for application to concrete unit masonry and cast-in-place concrete.

Part 3 Execution

3.01 Installation

A. Apply all dampproofing materials in strict accordance with manufacturer's instructions and recommendations and this Section.

B. Before backfilling against dampproofing, repair all damaged surfaces.

3.02 Preparation

A. Prior to commencing dampproofing operations inspect all containers for rips, tears or holes. Any damaged containers shall be rejected and replaced with new materials.

B. Make sure that surfaces to be treated are free of laitance and other materials which will inhibit the bonding and penetration capabilities of the dampproofing systems. Floor hardeners or curing agents should not be used prior to the application.

C. Do not apply systems when the ambient temperature falls below 35 degrees F. The temperature should be above 35 degrees F for 24 hours before and 48 hours after the coating application.

D. Surfaces to receive slurry applications shall have a wood float or rough finish and have

open capillaries. Construction joints and visible cracks exceeding 0.01-inch in size should be routed out 3/4-inch. Remove all laitance, dirt, dust and rinse all concrete slabs and cracks with water. The surfaces shall have a dark appearance at the time when the slurry coating is applied. Remove form oil, form release agents and other foreign materials which will inhibit the bond and penetration of the system. Steam clean, acid etch, or brush blast when necessary. Leave tie holes 1-inch back. Segregated areas and faulty construction joints shall be routed out to sound concrete. Construction joints and visible cracks in concrete surfaces exceeding hairline size (larger than 0.01-inch) should be routed out 3/4-inch deep.

E. Clean surfaces to be dampproofed with water. Dampness should be present in the concrete strata to achieve maximum initial penetration of the penetrating cementitious dampproofing compound.

3.03 Mixing Procedures

A. Slurry Mix: Use separate containers to measure powder and water. Water must be potable. Add one part water to three parts powder; mix thoroughly. Stir the slurry mixture frequently during the application and prepare only as much as can be applied within a 30 minute period.

B. Mortar Mix: Add water to powder. Work with trowel until medium stiff consistency is reached. Prepare only as much mix as can be applied within a 30 minute period.

3.04 Safety Measures

For maximum safety, hands should be protected with rubber gloves whenever penetrating cementitious dampproofing materials are being used for an extended period of time. During spray or overhead applications, goggles should be worn.

3.05 Application Procedures

A. Penetrating cementitious dampproofing coatings shall be applied with a stiff masonry brush/broom or with normal hopper fed spray equipment.

1. Horizontal Concrete Surfaces

a. Dry Shake and Power Trowel, Wood Float or Bull Float Application: Dry shake when horizontal concrete slab is in the plastic state. Apply 1.0 pound per square yard. Trowel or float surface to specified finish.

b. Slurry Mix: Construction joints and pour joints should be treated with 2.5 to 3.0 pounds per square yard in slurry consistency immediately prior to placing of concrete. Install mortar strip 3/4 x 1-1/4-inch at all construction joints. Installation of reglets and cant strips at time of forming is recommended.

2. Vertical Concrete Surfaces

   a. Honeycombed areas, faulty construction joints, cracks, and tie holes, apply 2.0 pounds per square yard and fill.

   b. Coat interior/exterior surfaces of concrete walls 2.5 to 3.0 pounds per square yard using slurry mix.

   c. Fill reglets, construction joints, junction walls and slab.

3.06 Protection and Curing

A. Protect the freshly treated surfaces from rain for a minimum period of 24 hours. Maintain above 35 degrees F for 48 hours.

B. Moisture cure all treated areas for a minimum period of two days, starting with a fine water fog spraying the day following completion of the application, or apply Penecure curing compound after the set of the coating.

3.07 Neutralization

A. Treated surfaces to receive paints or other protective coatings should be neutralized with a vinegar salt water solution or muriatic acid/water solution 1:10. Rinse all treated surfaces thoroughly with water. The neutralization procedures should follow direction of product labels.

B. For application to cisterns and drinking water reservoirs, follow EPA requirements.

3.08 Cleaning

Prior to acceptance of the work of this Section, thoroughly clean all installed materials and related areas in accordance with the requirements of Section 01710 of these Specifications.

END OF SECTION

Part 1 General

1.01 Scope

A. The work covered by this Section includes furnishing all labor, materials and equipment required to furnish and install all building insulation as specified herein and/or shown on the Drawings.

B. Roof insulation shall be furnished and installed under applicable roofing section(s) of these Specifications.

1.02 Submittals

Complete shop drawings and engineering data shall be submitted to the Engineer.

1.03 Storage and Protection

Insulation shall be stored indoors in a dry location in accordance with the manufacturer's instructions.

1.04 Quality Assurance

A. All insulation shall be delivered to the site in unopened packages. Packages shall be clearly marked with the manufacturer's name, type, quantity of insulation and "R" value (where applicable).

B. "R" values shall be determined in accordance with the standards of the National Mineral Wool Insulation Association.

Part 2 Products

2.01 Perimeter Insulation

A. Perimeter insulation shall be 1-inch thick rigid, closed cell, urethane board insulation conforming to Federal Specification HH-1-530A, Type III, Grade 2, Class 1, equal to that manufactured by the Upjohn Company or Owens Corning.

B. Urethane perimeter insulation shall have a density of not less than 2.0 pcf in accordance with ASTM C 303. Thermal conductivity of not less than 0.14 Btu/ inch/square foot-hour- degree F in accordance with ASTM C 578, and a water absorption not to exceed 0.1 percent in accordance with ASTM C 272.

C. Perimeter insulation shall be approved for use in FHA construction.

D. Adhesive shall be as recommended by insulation manufacturer.

2.02 Rigid Wall Insulation

A. Unless noted otherwise, rigid wall insulation shall be 1-inch thick, rigid, closed cell, expanded polystyrene board insulation conforming to ASTM C 578.

B. Polystyrene wall insulation shall have a density of not less than 1.0 pcf in accordance with ASTM C 303, a thermal conductivity not to exceed 0.26 Btu/inch/square foot/ hour/degree F in accordance with ASTM C 518, and a water absorption not to exceed two percent in accordance with ASTM C 272. Flame spread and fuel contributed shall not exceed 25 and smoke generated shall not exceed 50 in accordance with ASTM E 84 for 1-inch thickness.

C. Polystyrene wall insulation shall be approved for use in FHA construction.

2.03 Vapor Barrier

Vapor barrier shall be 0.006-inch thick polyethylene film membrane in a width as wide as practical.

Part 3 Execution

3.01 Installation of Perimeter Insulation

A. At all heated areas, provide a 24-inch wide horizontal layer of insulation under all slabs on grade, the exterior edge of which shall abut the inside face of the foundation wall.

B. Place insulation directly on level, well-tamped fill before concrete floor slab is poured. Place insulation carefully and bed in a manner to keep top surfaces level and in same plane. Cement sections together tightly.

3.02 Installation of Vapor Barrier

Install vapor barrier directly over fill and perimeter insulation. Where joints in membrane occur, lap a minimum of 18-inches. Exercise care not to puncture the membrane. Where punctures occur, patch so as to maintain a continuous membrane. Install concrete slab floor directly over the vapor barrier.

3.03 Cleaning

Prior to acceptance of the work of this Section, thoroughly clean all installed materials and related areas.

END OF SECTION

Part 1 General

1.01 Scope

A. Environmental Requirements: Apply insulation in dry weather, when ambient temperature is above 45 degrees F.

B. Protection

1. Protect the building and the site from damage and defacing by operations, using tarps at hoisting points.

2. Restore or replace adjacent work or materials damaged during the handling of insulation materials.

1.02 Submittals

Submit product data and manufacturer's descriptive literature and installation instructions for insulation materials. Indicate specific systems and procedures for use, and date of publication.

1.03 Delivery, Storage and Handling

Store materials in a dry, covered area, off ground and out of direct sunlight.

1.04 Quality Assurance

Comply with the Standards of the American Society for Testing and Materials (ASTM) as referenced herein.

1.05 Warranty

Provide a warranty for all roof insulation work to be free of defective materials and workmanship in accordance with the requirements of Section 01740 of these Specifications.

Part 2 Products

2.01 Acceptable Manufacturers

A. Atlas Energy Products, ACFoam-1

B. Celotex Corporation, Celo-Foam Ultra

C. Homasote Company, Ultra/M-II Iso/Glas

D. International Permalite, Inc., Permalite IsoLite

E. Manville Roofing Systems Division, UltraGard Gold

F. R Max, Inc., Multi-Max

2.02 Isocyanurate Roof Insulation

A. Type: Rigid isocyanurate boards, 4 x 8 feet with nonasphaltic glass facing sheets

B. Thickness: 2-inches

C. Aged "R" Value at 75 Degrees F: 13.3

D. Fire Resistance: FM Class 1

2.03 Accessories

Adhesive shall be UL listed, Class A in accordance with ASTM E84-87.

Part 3 Execution

3.01 Preparation

A. Immediately prior to application of insulation materials, sweep roof deck, removing debris and foreign material.

B. Prior to beginning roofing work, a preroofing conference will be held to review work to be accomplished.

1. The Contractor, Engineer, roofing subcontractor and all other subcontractors who have equipment penetrating the roof or whose work involves access to the roof shall be present.

2. The Contractor shall notify the Engineer at least three days prior to the time for the conference.

3. The Contractor shall record minutes of the meeting and shall distribute those minutes to all attending parties.

3.02 Rigid Insulation Installation

A. Loose lay insulation over the deck in accordance with the roofing manufacturer's instructions.

B. Install insulation in one layer. Lay insulation in the longest possible lengths, continuous between roofing tracks. Butt edges for snug contact with gaps shall not exceed 1/4-inch. Bear edges of board on deck ribs.

C. Spot adhere insulation to metal deck to hold insulation in place prior to installation of metal roofing.

D. Install only as much roof insulation each work period as can be covered in that work period.

END OF SECTION

Part 1 General

1.01 Scope

The work included in this Section consists of furnishing all labor, materials, equipment and services necessary for installing the preformed fascia and soffit panels as shown on the Drawings or specified herein.

1.02 Performance Features and Tests

A. Structural Tests: Designs shall be verified by structural tests for wind loads by the "Chamber Method" as outlined in ASTM E 72. There shall be a minimum wind load of 20 pounds per square foot or higher as required by NAAMM Specifications for the particular geographical area involved. The deflection criteria shall be L/180 unless specified otherwise.

B. Insurance Approvals: Approved by the Factory Insurance Association; reference FIA Procedure Manual, Section P.2.3. Approved by Factory Mutual.

1.03 Submittals

A. Submit detailed shop drawings showing layout and types of specified materials, trim, closures and other necessary accessories, including anchorage details.

B. Submit manufacturer's specifications and installation instructions for each item specified together with shop drawings. Include manufacturer's certification as may be required to show compliance with these Specifications.

C. Submittals shall be in accordance with the requirements of Section 01340 of these Specifications.

1.04 Storage and Protection

All materials shall be stored and protected in accordance with the requirements of Section 01640 of these Specifications.

1.05 Quality Assurance

The manufacturer shall provide written certification to the Engineer that all materials furnished comply with all applicable requirements of these Specifications.

Part 2 Products

2.01 Acceptable Manufacturers

Fascia panels shall match color and profile of sheet metal roofing. Soffit panels shall match "Trimwall" profile, by Elwin G. Smith Division of the Cyclops Corporation, Pittsburg, Pennsylvania.

2.02 Fascia Panels

A. Fascia panels shall be roll formed with interlocking ribs at side joints, 24 gauge, galvalume to comply with ASTM A792-83 profile. Profile shall match sheet metal roof profile.

B. Soffit panels shall be roll formed with interlocking ribs at side joints, 22 gauge, 1.25 ounce galvalume, "Trimwall" R-2 profile.

C. Flashings and trim pieces shall be formed from same gauge and finish metal as fascia panels.

D. Closures shall be neoprene.

E. The finish on the exposed surface of the fascia and soffit panels shall be the manufacturer's standard fluorocarbon coating system with Kynar resin and have a 20 year life expectancy. Color shall be selected by the Engineer from the manufacturer's standard colors.

Part 3 Execution

3.01 Erection

Soffit panels shall be erected in strict accordance with the manufacturer's instructions on metal framework with proper backing as shown on the Drawings.

3.02 Cleaning

Prior to acceptance of the work of this Section, thoroughly clean all installed materials and related areas in accordance with the requirements of Section 01710 of these Specifications.

END OF SECTION

Part 1 General

1.01 Scope

The work covered by this Section consists of furnishing all labor, equipment and material required to install all sheet metal work, including metal flashing and counterflashing, flashing transitions, wall flashing, gutters, downspouts, and related work as described herein and/or shown on the Drawings.

1.02 Submittals

A. Submittals shall be made in accordance with the requirements of Section 01340 of these Specifications.

B. Submit written information regarding material proposed and installation instructions for the use substantiating compliance with Specification requirements. Submit two samples, 12 x 12-inches, of each type of flashing or sheet metal material and each accessory specified. Submit sample packs of each type of fastener.

C. Submit shop drawings, showing manner of forming, jointing and securing flashings, guttering and accessories. Detail waterproof connections to adjoining work and at obstructions and penetrations. Shop drawings shall indicate thickness and dimensions of all parts, fastening and anchoring methods, details and locations of all seams, joints and other provisions necessary for thermal expansion and contraction.

1.03 Storage and Protection

A. Sheet metal materials and accessories shall be stored and protected in accordance with the requirements of Section 01611 of these Specifications.

B. The Contractor shall protect all stainless steel materials from exposure to chlorides and muriatic acids. Wash affected areas immediately with five percent soda solution and rinse with clear water.

C. Sheet metal work shall be handled with sufficient care to prevent damage to surfaces, edges and ends. All material at site shall be stored above ground in a covered, dry location. Damaged material that cannot be restored to its original condition will be rejected and shall be replaced at no additional cost to the Owner.

1.04 Quality Assurance

The manufacturer shall provide written certification to the Engineer that all products furnished comply with all applicable requirements of these Specifications.

Part 2 Products

2.01 Materials and Construction

A. Stainless Steel: Unless otherwise specified or indicated, all flashing, counterflashing, coping or other items called for on the Drawings, shall be stainless steel conforming to ASTM A 167, Type 304 with No. 2D annealed finish, of dead soft temper. Concealed thru-wall stainless steel flashing shall be minimum 30 gauge with ribbed texture. Exposed stainless steel flashing shall be minimum 26 gauge, Terne coated.

B. Copper: Where copper flashing and appurtenances are called for on the Drawings, provide and install cold rolled copper with ASTM B 370. Concealed thru-wall copper flashing shall weigh not less than five ounces per square foot and shall be coated on both sides with asphalt-impregnated glass fabric. Exposed copper flashing shall weigh not less than 16 ounces per square foot and shall be uncoated. Unless noted otherwise, all new exterior scuppers and downspouts shall be copper.

C. Zinc Coated (Galvanized) Steel: Where galvanized sheet metal items are specified or shown on the Drawings, provide galvanized items conforming with ASTM A 527, lock-forming quality. Coating shall be G90, ASTM A 525 having a minimum thickness of 26 gauge. All galvanized metal shall be paint grip type for receipt of field primer and paint in accordance with the requirements of Section 09900 of these Specifications.

D. Aluminum

1. Where aluminum sheet flashing or metal items are specified or shown on the Drawings, the aluminum shall conform with ASTM B 209, Alloy 3003, temper H14. These items shall have a finish conforming with AA-C22A41 and shall be minimum 24 gauge.

2. Extruded aluminum shall be used for all gravel stops and fascia unless specified or shown otherwise. Aluminum shall be alloy 6063, Temper T6.

E. Fasteners: Nails, screws, bolts, rivets and other fastenings for sheet metal shall be of the size and type suitable for the intended use and shall be compatible with metal which it shall contact. Fasteners used with aluminum and stainless steel shall be stainless steel. Types of fasteners shall be as recommended by the manufacturer and shall conform with Federal Specifications.

F. Downspouts

1. Downspouts shall be 3 x 4-inches corrugated rectangular 0.024-inch nominal gauge aluminum with aluminum support brackets spaced on 60-inch centers.

2. All hangers, fasteners and accessories shall be of compatible materials.

G. Splash Blocks: Splash blocks shall be reinforced precast concrete, 3,000 psi, 30 x 16 x 4-inches thick.

H. Sealant: Where sealant is specified or shown on the Drawings, it shall be in accordance with the requirements of Section 07900 of these Specifications.

I. Bituminous Plastic Cement: Where bituminous plastic cement is specified or shown on the Drawings, use cement conforming to Federal Specification SS-C-153, Type I.

J. Solder: Solder shall be ASTM B 32, Alloy grade 58, composed of 50 percent tin and 50 percent lead.

K. Flux: Flux used on stainless steel shall be a phosphoric acid base flux equal to "MicroFlex Soldering Flux" by Washington Steel Corporation or Type "MA" by Lake Chemical Co.

Part 3 Execution

3.01 Inspection

A. Verify that substrates are smooth and clean to extent needed for sheet metal work.

B. Verify that reglets, nails, cants and blocking to receive sheet metal are installed and free of concrete and soil.

C. Do not start sheet metal work until conditions are satisfactory.

3.02 Preparation

Before installing sheet metal, verify shapes and dimensions of surface to be covered.

3.03 Installation

A. General

1. Install all flashing and sheet metal work in accordance with the "Architectural Sheet Metal Manual" by SMACNA.

2. Install work watertight, without waves, warps, buckles, fastening stresses or distortion, allowing for expansion and contraction.

3. Hem exposed edges except edges forming drip lips.

4. Angle bottom edges of exposed vertical surfaces away from finished surface to form drips.

5. Thru-wall flashing shall start 1/2-inch from outside of wall and shall be turned up not less than 2-inches and shall be anchored in interior block wall mortar joint. Flashing shall be laid in a thin bed of mortar and topped with a thin bed of mortar. Joints shall be lapped at least 4-inches and sealed with plastic cement.

6. Lintel and sill flashing shall extend 6-inches beyond ends of lintel or sill and shall be turned up at the ends to form a pan.

7. Set one splash block below each downspout unless shown or noted otherwise.

B. Seams

1. Common Lock Seams: 5/8-inch finished width; four-ply loose lock.

2. Flat Lock Seams: 3/4-inch finished width; four-ply flat lock, malleted tight; sweated full with solder.

3. Drive Lock Seams: Fold back abutting edges; cover joint with 1/8-inch wide loose drive cap.

4. Single Corner Seams: 5/8-inch finished width; three-ply loose lock; corners lapped and soldered.

5. Double Corner Seams: 5/8-inch finished width; four-ply double lock

6. Lap Seams: 7/8-inch finished width.

7. Soldered Lap Seams: 1-inch finished width; sweated full with solder.

C. Counter Flashing

1. Where metals abut adjacent dissimilar metals, the juncture shall be executed in a manner that will facilitate drainage and shall be coated with a bituminous coating as specified or as recommended by the manufacturer.

2. Factory form flashing components to suit all conditions and wall thicknesses, offsets, corners and others to minimize field forming. Where field forming is necessary, fabricate to shapes indicated on the Drawings and specified herein.

3. Except as otherwise indicated on the Drawings, comply with instructions and applicable details of "Architectural Sheet Metal Manual" by SMACNA.

4. Install with lines and corners of exposed units true and accurate. Exposed faces shall be flat and free of buckles, excessive waves and avoidable tool marks, considering temper and reflectively of metal. Provide uniform and neat seams.

5. All joints at flashing transitions shall be neatly joined and they shall be fastened and sealed or fastened and soldered.

D. Downspouts

1. Hangers shall conform with SMACNA, minimum 0.024 x 1-inch flat stock aluminum.

2. Downspout shall be securely fastened to the wall with aluminum bands located not more than five feet apart. Anchorage shall be made with 1/4-inch stainless steel machine bolts into noncorrosion anchors.

E. Soldering

1. Stainless Steel

a. Remove foreign material, grease and dirt from metal surfaces using a clean rag soaked in solvent. Smooth surfaces to be soldered may be roughened with clean emery cloth or sandpaper (not steel wool). Apply noncorrosive phosphoric acid-type flux to all surfaces to be joined and pre-tin.

b. Remove flux residue by using a clear-water rinse.

c. Assemble parts and solder using non-corrosive phosphoric or rosin flux. Heat metal thoroughly to completely sweat solder through full contact area.

2. Other Materials: Clean and flux metals prior to soldering. Sweat solder completely through seam width.

F. Reglets: Install in accurate locations, straight, in-line and leak proof joints.

3.04 Painting

All galvanized items shall be factory-painted in accordance with the requirements of Section 09900 of these Specifications. After installation, the galvanized items shall be touched up with identical paint supplied from the factory.

3.05 Inspection

Damaged work shall be repaired or replaced. The Contractor shall make, at Contractor's own expense, all necessary changes, modifications and/or alterations required to ensue a satisfactory installation.

3.06 Cleaning

A. As work progresses, neutralize excess flux with 5 to 10 percent washing soda solution, and thoroughly rinse.

B. Prior to acceptance of the work of this Section, clean all installed materials and affected work areas in accordance with the requirements of Section 01710 of these Specifications.

END OF SECTION

Part 1 General

1.01 Summary

A. This Section includes the following: 1-1/2" standing-seam metal roofing.

B. Related sections include the following:

1. Division 5 Section "Steel Deck" for steel roof deck.

2. Division 7 Section "Sheet Metal Flashing and Trim" for flashing not part of roofing and other sheet metal work.

3. Division 9 Section "Painting" for priming and painting installed metal roofing.

1.02 Performance Requirements

Install sheet metal roofing capable of withstanding normal thermal movement, wind loading, structural movement, thermally induced movement, and exposure to weather without failure or infiltration of water into the building interior.

1.03 Submittals

A. Product Data: For each product indicated. Include details of construction relative to materials, dimensions of individual components, profiles, and finishes.

B. Shop Drawings: Show details for forming, joining, and securing metal roofing, and for pattern of seams. Show expansion-joint details and waterproof connections to adjoining work and at obstructions and penetrations.

C. Samples for Initial Selection: Manufacturer's color charts showing the full range of colors available for metal roofing with color-coated finishes.

D. Samples for Verification: 12-inch-(300-mm-) square specimens of metal roofing material with specified finishes applied. Where finishes involve normal color and texture variations, include Sample sets of 2 or more units showing the full range of variations expected.

E. Product Certificates: Signed by manufacturers of the following products certifying that the products furnished comply with requirements:

1. Sheet metal roofing.

2. Special finishes.

F. Qualification Data: For firms and persons specified in the "Quality Assurance" Article to demonstrate their capabilities and experience. Include lists of completed projects with project names and addresses, names and addresses of engineers and city, and other information specified.

1.05 Quality Assurance

A. Installer Qualifications: Engage an experienced installer who has completed sheet metal roofing similar in material, design, forming method, and extent to that indicated for this Project and with a record of successful in-service performance.

B. Industry Standard: Unless otherwise shown or specified, comply with the Sheet Metal and Air Conditioning Contractors National Association's (SMACNA) "Architectural Sheet Metal Manual." Conform to dimensions and profiles shown.

C. Wind-Uplift Resistance: Provide roof assemblies that meet requirements of UL 580 for Class 90 wind-uplift resistance.

1. Maintain current certification of UL follow-up program for field-rolled panels on field-forming equipment.

1.06 Warranty

A. General Warranty: Special warranties specified in this Article shall not deprive the Owner of other rights the Owner may have under other provisions of the Contract Documents and shall be in addition to, and run concurrent with, other warranties made by the Contractor under requirements of the Contract Documents.

B. Special Finish Warranty: Submit a written warranty executed by the manufacturer covering failure of the factory-applied exterior finish on metal fascia within the specified warranty period and agreeing to repair finish or replace sheet metal that evidences finish deterioration. Deterioration of finish includes, but is not limited to, color fade, chalking, cracking, peeling, and loss of film integrity.

C. Special Installer’s Warranty: 5 years from date of substantial completion. NDL (no dollar limit) during the warranty period for repair and or replacement for all defects in materials and workmanship.

D. Warranty Period: 20 years from date of Completion.

Part 2 Products

2.01 Sheet Metals

A. 24 gage galvalume sheet to comply with ASTM A 792-83 and the following requirements:

1. Galvalume Sheet: ASTM A 792-83, AZ-55, 40 KSI yield point, 52 KSI tensile strength.

2. Thickness: 24 gage, unless otherwise indicated.

3. Standing Seam: 1-1/2"

4. Finish: Apply the following organic coating in a thickness of not less than 0.0336 inch (0.85 mm), unless otherwise indicated. Furnish appropriate air-drying spray finish in matching color for touchup.

   a. Acrylic-Enamel Coating: Factory-applied, baked-on enamel coating consisting of epoxy primer and acrylic-enamel topcoat with a dry film thickness of not less than 0.2 mil (0.005 mm) for primer and 0.8 mil (0.02 mm) for topcoat.

      i. Color: To match existing roofing color of adjacent buildings, and as approved by the Architect.

      ii. Factory Prime Coating: Where painting after installation is indicated, provide pretreatment and white or light-colored, factory-applied, baked-on epoxy primer coat; with a minimum dry film thickness of 0.2 mil (0.005 mm).

2.02 Underlayment Materials

Felts: ASTM D 226, Type II (No. 30), asphalt-saturated organic felts.

2.03 Miscellaneous Materials

A. General: Provide materials and types of fasteners, solder, welding rods, protective coatings, separators, sealants, and accessory items as required for a complete roofing system and as recommended by sheet metal manufacturer and fabricator for metal roofing work, unless otherwise indicated.

B. Expansion-Joint Sealant: For hooked-type expansion joints, which must be free to move, provide nonsetting, nonhardening, nonmigrating, heavy-bodied polyisobutylene sealant.

C. Primer Paint: Rust-inhibitive primer recommended by sheet metal manufacturer for finish coat.

D. Metal Accessories: Provide components matching sheet metal roofing in finish and material that are required for a complete roofing system, including the following:

   1. Clips, flashings, and ridge closure strips.

   2. Trim, copings, fasciae, gutters, and louvers.

E. Sealing Tape: Pressure-sensitive, 100 percent solids, polyisobutylene compound sealing tape with release paper backing. Provide permanently elastic, nonsag, nontoxic, nonstaining tape.

F. Elastomeric Joint Sealant: ASTM C 920, of base polymer, type, grade, class, and use classifications required to produce joints in roofing that will remain weathertight and as recommended by the roofing manufacturer for installation indicated.

G. Bituminous Coating: Cold-applied asphalt mastic, SSPC-Paint 12, compounded for 15-mil (0.4-mm) dry film thickness per coat, unless otherwise indicated. Provide inert-type noncorrosive compound free of asbestos fibers, sulfur components, and other deleterious impurities.

H. Snow Guards: Prefabricated, noncorrosive units designed to use with sheet metal roofing and complete with predrilled holes or hooks for anchoring.

2.04 Fabrication

A. General: Fabricate sheet metal roofing to comply with details shown, with metal roofing manufacturer's written instructions, and with recommendations of SMACNA's "Architectural Sheet Metal Manual" that apply to the design, dimensions, metal, and other characteristics of installation indicated.

B. Fabricate sheet metal to allow for expansion in running work sufficient to prevent leakage, damage, and deterioration of the work. Form exposed sheet metal work to fit substrates without excessive oil canning, buckling, and tool marks, true to line and levels indicated, and with exposed edges folded back to form hems.

C. Expansion Provisions: Where lapped or bayonet-type expansion provisions in the Work cannot be used, or would not be sufficiently waterproof and weatherproof, form expansion joints of intermeshing hooked flanges, not less than 1 inch (25 mm) deep, filled with sealant (concealed within joints).

D. Sealant Joints: Where movable, nonexpansion-type joints are indicated or required to produce weathertight seams, form metal to provide for proper installation of elastomeric sealant, in compliance with SMACNA standards.

E. Separations: Separate metal from noncompatible metal or corrosive substrates by coating concealed surfaces at locations of contact with bituminous coating or other permanent separation as recommended by manufacturer or fabricator.

Part 3 Execution

3.01 Examination

Examine substrates and conditions, with Installer present, for compliance with requirements indicated for conditions affecting performance of sheet metal roofing. Do not proceed with installation until unsatisfactory conditions have been corrected.

3.02 Preparation

A. Coordinate metal roofing with rain drainage work, flashing, trim, and construction of decks, parapets, walls, and other adjoining work to provide a leakproof, secure, and noncorrosive installation.

B. Promptly remove protective film, if any, from exposed surfaces of metal roofing. Strip with

care to avoid damage to finish.

3.03 Installation, General

A. Install roofing to comply with sheet metal roofing manufacturer's written instructions, unless otherwise indicated.

B. Separate dissimilar metals by painting each metal surface in area of contact with a bituminous coating, by applying rubberized-asphalt underlayment to each metal surface, or by other permanent separation as recommended by manufacturers of dissimilar metals.

C. Install felt underlayment and building's paper slip sheet on substrate under metal roofing, unless otherwise recommended by sheet metal manufacturer. Use adhesive for temporary anchorage, where possible, to minimize use of mechanical fasteners under metal roofing. Apply from eave to ridge in shingle fashion and lap joints 2 inches (50 mm) minimum.

D. Coat back side of metal roofing with bituminous coating where it will contact wood, ferrous metal, or cementitious construction.

E. Form and fabricate sheets, seams, strips, cleats, valleys, ridges, edge treatments, integral flashings, and other components of metal roofing to profiles, patterns, and drainage arrangements shown and as required for leakproof construction. Provide for thermal expansion and contraction of the work. Seal joints as shown and as required for leakproof construction. Shop fabricate materials to greatest extent possible.

F. Sealant-Type Joints: Where sealant-filled joints are used, embed hooked flanges of joint members not less than 1 inch (25 mm) into sealant. Form joints to completely conceal sealant. When ambient temperature is moderate, between 40 and 70 deg F (4 and 21 deg C), at time of installation, set joint members for 50 percent movement either way. Adjust setting proportionately for installation at higher ambient temperatures. Do not install sealant-type joints at temperatures below 40 deg F (4 deg C). Comply with requirements of Division 7 Section "Joint Sealants" for handling and installing sealants.

G. Fabricate and install work with lines and corners of exposed units true and accurate. Form exposed faces flat and free of buckles, excessive waves, and avoidable tool marks, considering temper and reflectivity of metal. Provide uniform, neat seams with minimum exposure of solder, welds, and sealant. Fold back sheet metal to form a hem on concealed side of exposed edges, unless otherwise indicated.

H. Conceal fasteners and expansion provisions where possible in exposed work and locate to minimize possibility of leakage. Cover and seal fasteners and anchors as required for a tight installation.

I. Rivet joints in uncoated aluminum where necessary for strength. Clean exposed surfaces of every substance that is visible or that might cause corrosion of metal or deterioration of finish.

3.04 Protection

Provide final protection and maintain conditions, in a manner acceptable to manufacturer and installer that ensure metal roofing is without damage or deterioration at the time of Substantial Completion.

Part 1 General

1.01 Scope

The work covered by this Section consists of furnishing all labor, equipment and material required to apply all sealants and related work as described herein and/or shown on the Drawings.

1.02 Submittals

Complete engineering and product data shall be submitted to the Engineer in accordance with the requirements of Section 01340 of these Specifications. Color samples shall be submitted for approval by the Owner.

1.03 Storage and Delivery

A. Materials shall be stored in strict conformance with the manufacturer's instructions and in accordance with the requirements of Section 01611 of these Specifications.

B. Materials shall be delivered to the job site in sealed containers, with the manufacturer's original labels attached and accompanied by written certification indicating compliance with the requirements of these Specifications.

1.04 Quality Assurance

The manufacturer shall provide the Engineer with written certification that all products furnished comply with all applicable requirements of these Specifications.

1.05 Warranty

A. Provide a warranty against defective materials and workmanship in accordance with the requirements of Section 01740 of these Specifications.

B. The following types of failures will be considered defective work requiring replacement: leakage, hardening, cracking, crumbling, melting, shrinking or running of caulking compound or staining of adjacent work by caulking compound.

Part 2 Products

2.01 Materials

A. All caulking shall be a two component polysulfide sealant containing 100 percent solids and conforming to ANSI A116.1 and Federal Specification TT-S-00227E, Type II, Class A or B. Sealant shall be "Thiokol Sealant" by the Euclid Chemical Company, "Sikaflex 411/412" by the Sika Chemical Corporation or "Synthacaulk GC-5" as manufactured by Pecora Chemical Corporation. Use Class B for gun Grade and

Class A for pour grade. The caulking shall be nonbleeding and shall not stain any material to which it is applied.

B. Joint backing, where indicated or required, shall be equal to "Tremco Joint Backing" by Tremco Mfg. Company or "Ethafoam SB" backer rod by Dow Chemical Company. Application shall be in accordance with sizes listed below:

Joint Size, inches	Rod Diameter, inches
3/16	1/4
1/4	3/8
3/8	1/2
1/2	5/8
5/8	3/4
3/4	1

C. Color of sealant or caulking shall be as selected by the Engineer.

D. Caulking shall have a minimum life expectancy of 20 years and shall be resistant to the effects of sunlight, abrasion, oils, mild chemicals, cleaning agents and immersion in water.

E. Expansion Joint Sealant System: Provide engineered silicone sealing system at wall to corner expansion joint locations. Silicone sealing system shall be Color Joint ESS Series by MM Systems Corporation.

Part 3 Execution

3.01 Preparation

A. All joints or channels shall be cleaned and free of dirt, oil, grease, moisture, old paint, loose mortar and other foreign matter.

B. Metal surfaces shall be wiped with material equal to Zylol or Mek and then dried.

C. Masonry surfaces shall be cleaned with a wire brush and then blown clean. Any waterproofing treatments contaminating the joint must be completely removed.

D. Where joints are 1/2-inch wide, they should be backed to 1/2-inch of the surface. All 3/4-inch wide joints shall be backed to 1/4-inch of the surface. Size of joint backing shall be large enough so that it can be compressed by at least 30 percent before inserting into the joint.

E. Surface of concrete or masonry shall be primed in accordance with the manufacturer's printed instructions.

3.02 Application

A. The Contractor shall caulk all joints (both inside and outside of jambs, heads and sills) between the metal doors, windows, louvers, etc., and masonry throughout the buildings, as indicated on the Drawings, or otherwise required, so as to leave the building weathertight.

B. Apply sealant with hand or air gun under sufficient pressure and through nozzle openings of such a diameter so that a full bead of sealant is run into the joint and fills the opening completely.

C. Apply joint backer with a blunt rounded tool in accordance with manufacturer's instructions so it will not stain the sealant.

D. All beads should be tooled immediately after application to insure firm and full contact with the interface of the joint.

E. Work shall be of highest quality and in accordance with the manufacturer's current printed instructions.

3.03 Cleaning

Remove all excess material and smears adjacent to joint as work progresses.

END OF SECTION

Part 1 General

1.01 Scope

A. Furnish and install doors, frames of FRP composite construction in accordance with details and schedule shown on the Project Drawings and as specified herein. Door and frame products of aluminum, steel or wood constructions that use FRP face sheets are strictly excluded.

B. FRP is defined as “Fiberglass Reinforced Polyester”.

1.02 Design Requirements

A. Provide flush type FRP doors 1-3/4-inches thick.

B. Provide tubular frame members, fabricated in accordance with the manufacturer's standard fabrication methods.

C. Provide insulated openings in doors as indicated, with the manufacturer's standard aluminum moldings and stops with removable stops on the inside. Glazing materials and installation shall be in accordance with Section 08810 of these Specifications.

1.03 System Performance

Provide exterior door and frame assemblies that have been designed and fabricated to comply with requirements for system performance characteristics listed below as demonstrated by the testing manufacturer's corresponding stock systems according to test methods designated: Thermal Transmittance (exterior doors) - U-value of not more than 0.09 BTU/per AAMA 1503.1.

1.04 Related Sections

A. Section 0400, Masonry Mortar

B. Section 05500, Miscellaneous Metals

C. Section 06100, Rough Carpentry

D. 08225, Fiberglass Reinforced Polyester Doors

E. Section 08710, Finish Hardware

1.05 Quality Assurance

A. The manufacturer shall provide the Engineer with written certification that all products furnished comply with all applicable requirements of these Specifications.

B. Referenced Standards

1. American society for Testing and Materials (ASTM)

2. Society of Automotive Engineers (SAE)

3. International Building Code, Plastics (Chapter 26)

4. ANSI A250.4 1,000,000 cycle test

C. Manufacturer: Company specializing in the manufacture of FRP doors and frames with a minimum of five years documented experience. All doors and frames shall be manufactured by Tiger Door LLC, Omaha, Nebraska; FIB-R-DOR Division of Advance Fiberglass, Maumelle, Arizona or approved equal.

D. Referenced Standard: Where labeled fire doors are required, fiberglass doors and frames shall be UL listed and shall be tested successfully to UL10B / UL10C, UBC 7-2 standards.

E. Process: Certify that FRP doors are manufactured via press-molding technology.

F. Warranty: Provide written limited guarantee for FRP doors and frames as follows:

1. Non-Fire Labeled Doors: Doors shall be guaranteed for the life of the product against delamination and failure due to corrosion from the specific chemical environment named at the time of purchase. Furthermore, all products shall be inspected prior to shipment and guaranteed against defective workmanship for a period of ten calendar years after the date of purchase.

2. Fiberglass Door Frames: Fiberglass frames shall have welded corners and chemically bonded hinge reinforcements and shall be guaranteed for the life of the product against failure due to corrosion from the specific chemical environment named at the time of purchase. Furthermore, all products shall be inspected prior to shipment and guaranteed against defective workmanship for a period of ten calendar years after the date of purchase.

1.06 Submittals

A. Product Data: Provide catalog cut of FRP door detailing internal construction and reinforcements, materials used and description of molding process.

B. Shop Drawings: To include the following specific information:

1. Specifications relating to FRP door thickness, resin type, core material, method of construction, finish color, type of glass and glazing, anchor systems, joint construction and complete warranty information.

2. Complete schedules or drawings of FRP doors and frames (and associated Builders Hardware) showing identifying mark numbers, door and frame types,

typical elevations, nominal sizes, handling, actual dimensions and clearances, and required hardware preps and reinforcements.

3. Supporting reference drawings pertaining to frame mounting details, door light or louver installation, hardware locations, and factory hardware cutouts and reinforcements.

C. Color Samples: Provide a complete set of available finish colors from the manufacturer for color selection upon request.

D. Installation Instructions: Include manufacturer's specific information describing procedures, sequence and required fasteners for frame and door installation.

E. Production of FRP doors and frames shall not proceed until final approval of submittals.

1.07 Delivery, Storage and Handling

A. FRP doors and frames are delivered to your site in boxes with foam sheet separations.

B. Upon receipt of shipment, remove and inspect the doors and frames for damage. Note any damage on the shipping papers prior to accepting.

C. Handling and Storage of the Doors and Frames After Receipt: Doors shall be stored indoors in a vertical position, clear of the floor, with blocking between the doors to permit air circulation between the doors and prevent damage to the door faces. Rain/water or condensation must not be allowed to collect or lay between stored doors. Do not wrap in plastic sheeting as it will promote condensation formation within. Permanent discoloration can result.

D. Use care in handling FRP doors and frames to prevent damage to factory finishes. Wear protective gloves and do not slide or drag doors or frames against one another.

Part 2 Products

2.01 Acceptable Manufacturers

A. FRP doors and frames acceptable manufacturers are as noted:

1. Tiger Door LLC, Omaha, Nebraska.

2. FIB-R-DOR Division of Advance Fiberglass, Inc., Maumelle, Arizona

3. Approved equal.

2.02 FRP Doors

A. Heavy Duty Non-Fire Rated FRP Doors

1. Design: FRP doors shall be of seamless press-molded construction. Laminated FRP face sheets shall be applied while wet and uncured to an internal door stile and rail subframe/core assembly and then press-molded under heat and pressure. The composite door panel must be integrally fused over its entire surface area, not just adhesive-bonded at perimeter stiles and rails. Doors shall remain under pressure during curing for flat, warp-free surfaces.

2. Stiles and Rails: A high-modulus pultruded FRP square or rectangular tube subframe is to be provided within the door. Tubes are to be mitered and joined internally at the corners with solid polymer blocks to yield a one-piece unit that does not require any secondary external sealing. Provide a tubular midrail across width of door at lock height, and additional horizontal rails where specific design conditions dictate. Doors shall incorporate molded-in FRP edge strips, chemically bonded to the subframe stiles, for machining of hardware mortises so as not to cut or otherwise compromise the integrity of the pultruded stiles, nor allow moisture to penetrate into the core of the door. All connections shall be chemically welded. No mechanical fasteners will be allowed. The use or inclusion of aluminum, steel, gypsum or wood into stile and rail construction is not permitted.

3. Core: For maximum rigidity and compressive strength, either a triangular shaped 3/8” cell phenolic resin impregnated kraft paper honeycomb or a plastic honeycomb with face scrim core shall be used. Molding pressure and resin gel time shall be sufficient to allow for penetration of resin into the cellular structure of the core to maximize shear and peel strengths at the skin/core interface and eliminate the possibility of delamination. The honeycomb is to be completely enclosed within the stile and rail subframe. Use of foam or balsa wood is not permitted.

4. Internal Reinforcement: High-modulus pultruded tubular FRP, high-density polymer compression blocks, or plastic compression blocking at all hardware locations, and corner locations. No wood blocking, steel or aluminum reinforcing plates, ribs or fittings shall be used. A minimum of 900 lbs. of pullout strength is required for each factory supplied hinge screw.

5. Faces: Door facings shall utilize a chemical resistant thermosetting polyester resin system with fiber reinforcing layers. Supplier shall furnish door faces as shown on the Drawings and in the door elevations. Chopped strand mat layers shall be used to provide bond integrity between gelcoat, laminated facings and the internal door structure. Structural reinforcement shall be in the form of a knitted multi-layer material with layers of uni-directional glass fiber oriented in both the vertical and horizontal directions for high stiffness, impact resistance and resistance to warping.

6. Finish: The exposed FRP door faces must have an integrally molded 25/30 mils thick (wet) ultra-violet light stabilized marine grade NPG-isophthalic polyester gelcoat or an industrial urethane chemical coating color topcoat. Facings shall have a slightly textured semi-gloss finish to minimize the visual effects of wear and tear. Door face color shall be selected from the manufacturer's available colors. Gelcoat may not be sprayed onto the door face as a secondary coating.

7. Astragals: All pairs of doors shall be furnished with an astragal from door manufacturer made of same pultruded FRP material as door stile, rail and edge as required. Astragal shall be located on the meeting stile edge of each inactive leaf of double door pairs. Architect shall advise active leaf of door, and astragal shall be installed to cover meeting stile gap to effect seal and security.

8. Lights: Glass per job specification shall be factory furnished, glazed and installed. Standard glass thickness is 1/4". Centered glazing shall be installed between 45 degree pultruded FRP glazing stops and vinyl foam tape with concealed compression retainers for 1/4" glazing. No exposed fasteners or exposed silicone will be allowed for securing 1/4" glazing. Stainless steel screws may be allowed for other glazing thicknesses. Offset glazing shall be installed against a molded-in 5/8" wide exterior face flange with a bed of tape caulk, square 5/8" pultruded glazing stops with stainless steel screws shall complete the installation to secure the glazing in place and cover all unsightly caulking. Double flush 1/4" glazing shall be installed with vinyl foam tape and silicone sealant at all edges to complete flush appearance. All glazing stop material shall be pultruded FRP with a minimum fiberglass content of 50%. Metal, PVC, or vinyl "Glass Kit" type lights are not acceptable for non-fire rated openings.

9. Louvers: Fiberglass inverted V blade privacy or flat blade louvers shall be factory furnished and installed. All louvers and louver trim shall be manufactured exclusively from pultruded FRP profiles with a minimum fiberglass content of 50%. All louvers shall be coated to match door in color and sheen. Inverted V blade minimum thickness shall be 3/32" thick, flat blade louver minimum thickness shall be 3/16" thick. Adhesives for louver assembly shall meet or exceed all requirements set forth in Section 2.05 Mechanical Properties and Test Performance. Metal, PVC, vinyl or other non-fiberglass louvers are not acceptable for non-fire rated openings.

10. Raised panels and plants: All doors shown in elevation to have raised panels or plants shall be equipped with plants in configuration as shown on plans and in door schedule. Plants shall be applied by the door manufacturer as an integral part of the door face. Plants shall be bonded to the door skin; no mechanical fasteners shall be permitted. All applied moldings shall be of resin material, and shall be installed by the manufacturer to resemble a raised panel door. Field applied plants or moldings shall not be acceptable.

11. Provisions for lights and louvers shall be performed during manufacture and shall not be attempted in the field. Cutouts are to be totally enclosed by pultruded FRP stiles and rails incorporated into the door structure. Light and louver cutouts that expose core material are not acceptable.

2.03 FRP Frames

A. Non-Fire Rated FRP Frames

1. Design: FRP door frames furnished under this Specification shall utilize a high-modulus pultruded structural FRP shape. The frame section shall be standard double rabbeted 5-3/4" deep x 2" face, 3/16" thick, with integral 5/8" doorstop with 1 15/16" soffits, to match typical hollow metal configurations.

2. Corner Joints: KD jambs and header shall be joined at corners via miter connections. Post and beam corners will not be acceptable. Exposed fasteners for miter connections will not be acceptable except for wrap wall applications. One-piece frames shall be factory joined at corners via miter connections then chemically welded with FRP material and ground visibly smooth at frame face. Mechanical joints will not be accepted in lieu of welded frames, if specified.

3. Hardware Reinforcements: FRP reinforcing shall be chemically welded to door frame material at required locations. Minimum screw pullout strength of 1,100 lbs. per #12 x 1" sheet metal screw is required. Mechanically fastened reinforcements are not permitted.

4. Anchors: Bolt-In: Provide manufacturer's required number of 3/8" diameter x 4" long flathead stainless steel sleeve anchors for masonry openings, 3/8" diameter x 4" machine screw with nut and washers for structural steel openings, #14 x 4" stainless steel flathead sheet metal screws for wood or steel stud openings. Include extra anchors for additional frame height in two-foot increments above 8'-0". Provide single bolt anchor at center of all headers over four feet in nominal width. Stainless steel bolts shall be furnished by the factory.

5. Finish: Frames shall have a factory applied industrial urethane chemical coating color topcoat to match the color and sheen of the doors for superior weatherability. Gelcoat may not be sprayed onto the frame as a secondary coating.

2.04 Mechanical Properties and Test Performance

A. Pultruded structural shapes for stiles, rails, frames and astragals shall exhibit the following minimum longitudinal coupon properties (per ASTM):

1.	Tensile strength (D638)	30,000 psi
2.	Comprehensive strength (D695)	30,000 psi
3.	Flexural strength (D790)	30,000 psi
4.	Flexural modulus (D790)	1,600,000 psi
5.	Shear strength (D2846)	4,500 psi

6. Impact, notched (D256) 25 ft-lb/in

7. Barcol hardness (D2853) 50

8. Fire resistance (E-84) Class I

B. Core material shall exhibit the following minimum coupon properties (per ASTM):

1. Core material must comply with the International Building Code (IBC) Chapter 26 requirements for use with a plastic skin.

2. Shear strength, longitudinal direction (C273), 68.2 psi

3. Shear strength, transverse direction (C273), 25.8 psi

4. Shear modulus, longitudinal direction (C273), 6,940 psi

5. Shear modulus, transverse direction (C273), 1,878 psi

6. Shear elongation, longitudinal direction (C393 short beam), 1.79%

7. Shear elongation, transverse direction (C393 short beam), 2.72%

8. Maximum facing stress, longitudinal direction (C393 short beam), 735 psi

9. Maximum facing stress, transverse direction (C393 short beam), 289 psi

10. Maximum core shear stress, longitudinal direction (C393 short beam), 63.8 psi

11. Maximum core shear stress, transverse direction (C393 short beam), 24.9 psi

12. Modulus of elasticity (EI) per 1” width, longitudinal direction (C393 short beam), 4.92E+04 psi

13. Modulus of elasticity (EI) per 1” width, transverse direction (C393 short beam), 1.97E+04 psi

14. Maximum facing stress, longitudinal direction (C393 long beam), 9,011 psi

15. Maximum facing stress, transverse direction (C393 long beam), 4,727 psi

16. Maximum core shear stress, longitudinal direction (C393 long beam), 48.3 psi

17. Maximum core shear stress, transverse direction (C393 long beam), 23.5 psi

18. Modulus of elasticity (EI) per 1” width, longitudinal direction (C393 long beam), 1.14E+05 psi

19. Modulus of elasticity (EI) per 1” width, transverse direction (C393 long beam), 7.23E+05 psi

20. Stiffness “D”, longitudinal direction (C393 long beam), 379,270 psi

21. Stiffness “D”, longitudinal direction (C393 long beam), 260,608 psi

22. Compressive strength (C365) 53 psi

23. Compressive modulus (C365) 2,110 psi

24. Density (C271) 2.42 lb/ft^3

C. Adhesive shall exhibit the following minimum coupon properties (per SAE)

1. Tensile Strength (D882-83A modified) minimum 2,000 psi

2. 8 day 25° C at 100% humidity Cross Peel (SAE J1553) minimum 330 psi

3. 7 day immersion in seawater Cross Peel (SAE J1553) minimum 330 psi

4. 30 day immersion in saltwater Cross Peel (SAE J1553) minimum 330 psi

5. 72 hour immersion in gasoline Cross Peel (SAE J1553) minimum 330 psi

6. 72 hour immersion in 20% sulfuric acid Cross Peel (SAE J1553) minimum 300 psi

D. ANSI A250.4 1,000,000 Cycle Test: 4’ x 8’ door (up to a full light) and frame successfully tested in excess of 1,000,000 cycles with no failure of any of the design features of the door or frame.

2.05 Fasteners

All fasteners for all hardware shall be type 304 CRSS (18-8 series corrosion resistant stainless steel) with no exception. No carbon steel or aluminum components shall be used.

2.06 Hardware

A. Doors shall be factory mortised and drilled for mortise template butt hinges, with #12x2” long stainless steel screws pre-installed for hinge attachment. Provide and install hardware as listed in other section(s). If manufacturer’s standard screws do not comply, supplier shall furnish suggested screw size and type in 301 CRSS (18-8 SS).

B. Frames shall be factory machined and drilled for all hardware requiring mortises, with #12x1” long stainless steel screws pre-installed for hinge attachment.

C. Hardware shall be furnished as listed in Section 08710 or as so designated in appropriate section, and shall be coordinated by GC and installed by experienced mechanics.

D. Supplier shall furnish manufacturer's standard templates, installation instructions, or full size approved door and frame preparation instructions as approved by the Architect and as required by door and frame manufacturer prior to door and frame factory initiated manufacture. Standard factory lead-time for production of FRP doors and frames shall commence only and when all distributor-required preparation information is received and acknowledged by the door and frame manufacturer.

Part 3 Execution

3.01 Identification

Factory mark all doors and frames using a chemical resistant plastic tag or indelible marker with identifying number, keyed to shop drawings, prior to shipment.

3.02 Installation

A. Frames: Install in strict accordance with manufacturer's printed instructions. Set plumb and square, using shims for bolt-in of existing openings, or wood bracing prior to grouting of jambs. Use at least two 2x6 wood spreaders inside frame to maintain critical opening dimensions during grouting.

B. Doors: Hang per manufacturer's printed instructions using special screws provided for hinge attachment. Install doors to swing freely and to stand open at any angle. After installation, make final adjustments to hardware to allow for proper door operation and latching. All surface applied hardware shall be thru bolted.

3.03 Cleaning

A. Clean exposed surfaces of FRP doors and frames with a mild, non-abrasive cleaner and water.

B. Only chemical cleaning solution as recommended and available from manufacturer shall be used to assure neither finish nor door and frame properties are contaminated, nor compromised. Upon cleaner purchase, door manufacturer shall instruct Owner's personnel in maintenance procedures.

END OF SECTION

Part 1 General

1.01 Scope

The work covered by this Section consists of furnishing all labor, equipment and material required to construct and install all finishing hardware and related work as described herein and/or shown on the Drawings.

1.02 Qualifications

The hardware supplier must be an established firm dealing in contract finishing builder's hardware, with a sample room and adequate inventory. This supplier must be prepared to provide a competent representative to service hardware on the jobs as may be required. This hardware supplier shall be a regular franchised distributor for all hardware, materials and equipment required in this Section.

1.03 Submittals

A. Shop drawings and engineering data submittals shall be made in accordance with the requirements of Section 01340 of these Specifications. A complete schedule of each item of hardware required for each door or item of equipment shall be submitted. List hardware item number, manufacturer, manufacturer's number or symbol and finish.

B. Submit complete manufacturing data as follows:

1. Specifications and installation data on door hardware of all types.

2. With shop drawings, a brochure showing and describing each type of hardware that is being supplied to the Project.

C. Templates: Supply all necessary templates and template information to door and frame manufacturers in ample time to prevent delay to progress of Project.

1.04 Storage and Protection

A. Provide adequate locked storage space for hardware before distribution and installation.

B. Properly tag, index and file all keys as directed prior to turning over to Owner.

C. Hardware shall be checked after delivery to the Project by the hardware supplier before it is installed.

D. Package each item of hardware and each lock set separately in individual containers, complete with necessary screws, keys, instructions and installation template for spotting mortising tools. Match each container with item number corresponding to number shown on the Contractor's hardware schedule.

1.05 Quality Assurance

The manufacturer shall provide written certification to the Engineer that all products furnished comply with all applicable requirements of these Specifications.

Part 2 Products

2.01 Acceptable Manufacturers

A. The hardware manufacturer shall be an experienced, reputable firm with a full line of door hardware.

B. Mortise locksets shall be UL listed and shall be Sargeant "7800 Line", Yale "Series 8000" or Schlage L9000 "Series 064".

C. Cylindrical locksets shall be Sargeant "7-Line" or Yale "Series 5400".

D. Exit devices on doors with mullions shall be Sargeant "9863 Series" or Yale "Series 1500/2540".

E. Exit devices on doors without mullions shall be Sargeant "9728 Series" or Yale "Series 1520/2520".

F. Butt hinges shall be manufactured by Hager, Stanley, Yale or Lawrence Brothers.

G. Door closers shall be LCN 4010 Series, Sargeant 150 Series or Yale 3500 Series.

H. Combination door closer/door holder releases shall be Yale "4800 Series" or Norton "Series 7800".

2.02 Materials and Construction

A. Keys and Keying: All locksets shall be masterkeyed to all existing locksets with the master key. Five master keys shall be provided to the Owner, with five copies of each key required for the work.

B. Padlocks on the fence gates shall operate with the master key. Lockset number and keying for each door shall be designated by the Engineer upon receipt of manufacturer's fabrication and installation drawings and proposed door schedule, all of which shall be submitted to the Engineer for approval prior to manufacturer shipment of any doors. Mail all master keys and permanent keys by registered mail to the Engineer.

C. Construction Keying: Furnish all locks and cylinders construction keyed. Furnish Contractor with six construction master keys. At completion of job, the insertion of permanent key shall void the construction master key.

D. Mortise Locksets: Unless otherwise shown or specified, mortise locksets shall be heavy duty, mortise type conforming to Federal Specification FF-H-106, Type 86 and ANSI A156.2, Series 1000, Grade 1. Lockset shall have spherical knobs, escutcheon, 2-piece, 5/8-inch throw antifriction latch bolt, 1-inch throw deadbolt, 6-pin brass tumbler lock mechanism, and curved lip strike conforming to ANSI A115.1. Lockset shall be UL listed.

E. Cylindrical Locksets: Unless otherwise shown or specified, cylindrical locksets shall be heavy duty, bored cylindrical type conforming to Federal Specification FF-H-106, Type 161 and ANSI A156.2, Series 4000, Grade 1. Lockset shall have spherical knobs with recessed opening for key and/or turn mechanism, standard backset, and curved lip strike conforming to ANSI A115.3. Lockset shall be UL listed.

F. Panic and Fire Exit Devices: Where shown or specified, UL labeled panic and/or fire exit devices shall be furnished. Panic and fire exit devices on single doors and on pairs of doors with mullions shall be heavy duty, mortise type with 6-pin tumbler locking mechanism, 1-inch diameter crossbar, bar lockdown device, pull-side handle with thumbpiece and escutcheon. Bar lockdown device shall be allen key operated and shall retract latch bolt when in the locked position. Exit devices shall be UL listed.

1. Panic and fire exit devices on pairs of doors without mullions shall be heavy duty, concealed, vertical rod type. Exit device shall have 1-inch diameter crossbar, bar lockdown device, pull-side handle with thumbpiece and escutcheon. Bar lockdown device shall be allen key operated and shall retract vertical rod bolts when in the locked position. Exit device shall be UL listed.

2. Fire-rated pairs of doors with vertical rod exit devices on both leaves shall not have astragals.

G. Butt Hinges: Unless otherwise specified, doors 60-inches high and not over 90-inches high shall receive three full mortise butt hinges. Doors over 90-inches and not over 120-inches high shall receive four full mortise butt hinges. Hinges shall be of the stainless steel, 2 race ball bearing type. Out-swinging exterior doors shall have nonremovable pins. Minimum gauge of all hinges shall be 0.134-inch, unless indicated otherwise, with minimum size of 4-1/2-inches by 4-1/2-inches. Hinges shall be of a type and size to allow for proper door swing and clearance.

H. Door Closers: Automatic door closers shall have full rack and pinion construction with heat treated steel rack and pinion and cast iron or bronze hydraulic case. Close shall have separate valves for adjustment of latching speed and closing speed, 50 percent closing power spring adjustment, separate valve for adjustment of backcheck cushioning and tamperproof, rectangular, full metal cover. Backcheck shall be effective at approximately 70 degrees for both regular and parallel arm applications. Closers shall be surface mounted and through bolted on the door and, whenever possible, shall be mounted on the room or interior side. Closers with parallel arms on exterior doors shall be the next larger size than normally used with the door. Closers on exterior doors, cross-corridor doors and stairwell doors shall have hold-open

devices adjustable from 85 through 180 degrees. All door closers shall be furnished with a five year warranty from the manufacturer. Closers shall have finish to match other door hardware. Door closers shall be UL listed.

I. Combination Door Closer/Door Holder-Release: All fire-rated exterior doors, cross-corridor doors and stairwell doors shall be equipped with a combination door closer and door closer-release device. The closer/holder shall be a UL approved, electromechanical device designed to automatically release the door from a hold-open position and close it in the event of a fire. The device shall feature a solenoid-operated plunger valve to seal the hydraulic diameter and hold the door and a ball-check valve to allow the door to open. The closer/holder shall have a built-in, ionization-type smoke detector mechanism to trip the release mechanism and cause the door to close. On pairs of doors, only one of the closer/holder devices shall be equipped with a smoke detector, but both doors shall be released simultaneously by the action of the single detector. In the event of a power failure, the doors shall be released and the closer shall function as a standard automatic, hydraulic door closer. The release mechanism shall be automatically reset when power is restored or when the products of combustion have cleared. The closer/holder shall be capable of holding the door at any desired angle between 85 and 145 degrees and shall be top-jamb mounted on the stop side of the door. The closer/holder shall operate on 120 volt, 60 Hz, single phase power with concealed wiring.

J. Latch Bolts: On pairs of doors without panic or fire exit devices, the active leaf shall have lockset and automatic door closer as specified herein. The inactive leaf shall have independent, manually operated, stile-mounted latch bolts at top and bottom. No lockset or closer hardware shall be provided on the inactive leaf with latch bolts. Latch bolts shall be of the flush-mounted, lever arm type and shall have US 26D or US 32D satin finish. Door leaves shall be furnished with an overlapping steel astragal attached to the inactive leaf for in-swinging doors and attached to the active leaf for out-swinging doors.

K. Stops: Doors shall be equipped with door bumpers or door stops where specified or required to protect wall surfaces. Whenever possible, a wall-type door bumper shall be used in lieu of a floor stop. All wall bumpers shall be the concave type and of cast material with concealed screws. Floor stops shall be of cast material. All bumpers, stops and holders shall have proper type mounting and anchoring devices. Door stops and bumpers shall have US 26D or US 32D satin finish.

L. Kickplates: Where specified, doors shall be furnished with stainless steel kickplates. One kickplate shall be furnished per leaf unless otherwise specified. Kickplates shall be approximately 10-inches high and shall have a width equal to the door width less 3-inches. Finish shall be US 3D. Kickplate shall be located on the stop side of the door.

M. Pullplates: Pullplates shall be 3-1/2 x 15-inches in size with square corners and 8-inch flat bar pull. Plate material shall have a minimum thickness of 0.094-inch. Pullplate shall have the word "PULL" engraved at the top in 7/8-inch high, upper case letters. Letters shall be filled with black enamel. Plates shall include stainless steel oval head screws for installation.

N. Pushplates: Pushplates shall be 3-1/2 x 15-inches in size with square corners. Plate material shall have a minimum thickness of 0.094-inch. Pushplate shall have the word "PUSH" engraved at the top in 7/8-inch-high, upper case letters. Letters shall be filled with black enamel. Plates shall include stainless steel oval head screws for installation.

O. Lockset Function: Unless otherwise shown or specified, lockset function shall be as follows:

1. Entrance Doors: Latch bolt by both knobs; from outside by key. Outside knob locked or unlocked from inside by turn button on cylindrical locks (Fed. 161A, ANSI F81) and from door stile by pushbuttons on mortise locks (Fed. 86A, ANSI F08). Dead bolt on mortise locks from outside by key or inside by turn lever.

P. Weatherstripping: All exterior doors shall be weatherstripped. Weatherstripping shall be in accordance with the requirements of Section 08735 of these Specifications.

Q. Thresholds: Thresholds shall be furnished under Section 08735 of these Specifications.

R. Finish: All hardware shall receive finish as specified herein or selected by the Engineer. In general and unless otherwise shown or specified, all butt hinges, locksets, panic devices and flatware shall be stainless steel with US 32D finish. Cast items, such as stops, bumpers, flush bolts, etc., shall have US 26D dull chrome finish. Those items not available in US 32D or US 26D finish shall be stainless steel.

2.02 Hardware Schedule

The schedule of finish hardware to be installed on doors shall be as shown on the Drawings.

Part 3 Execution

3.01 Location

A. Before installation of any hardware, verify the positioning of each type of assembly. This will include the exact location of each element of hardware.

B. Distances from the floor to centerline of each hardware item shall be as recommended by the hardware supplier.

3.02 Installation

A. Install hardware such that it is accurately fitted, securely applied and carefully adjusted in accordance with manufacturer's instructions. Use care not to injure other work when installing.

B. When required, remove and replace doors so that door bottoms and tops may be painted.

C. Remove all visible hardware before painting is begun and replace afterwards, prior to completion of building.

D. The Contractor shall protect all hardware during construction work and replace defective units.

3.03 Cleaning

All materials shall be free from sand holes and other imperfections. Finish shall be as noted above. Protect all hardware during construction work and replace defective units. Clean and polish with clean cloth and leave in good operating condition.

END OF SECTION

Part 1 General

1.01 Scope

The work covered by this Section includes furnishing and installing thresholds and weatherstripping for all doors furnished under these Specifications as shown on the Drawings or required for a complete installation.

1.02 Coordination

The Contractor shall coordinate the work under this Section with work under the Sections 08225 and 08710 of these Specifications.

1.03 Submittals

A. Submit complete shop drawings and engineering data in accordance with the requirements of Section 01340 of these Specifications.

B. Submit samples (3-inch minimum length) of all resilient weatherstripping materials.

1.04 Storage and Protection

Weatherstripping and thresholds shall be stored and protected in accordance with the requirements of Section 01611 of these Specifications.

1.05 Quality Assurance

The manufacturer shall provide written certification to the Engineer that all products furnished comply with all applicable requirements of these Specifications.

Part 2 Products

2.01 Thresholds

A. Unless otherwise specified or shown, thresholds shall be of the flat saddle type with serrated surface approximately 1/2-inch in height and 4-inches in width.

B. Panic thresholds, for doors with vertical rod panic devices, shall be approximately 5/8-inch in height and 5-inches in width.

C. Thresholds for FRP shall be of stainless steel.

D. All necessary screws and fasteners shall be furnished. Fasteners for stainless steel thresholds shall be stainless steel.

2.02 Weatherstripping

A. All exterior FRP doors shall be weatherstripped as specified herein.

B. Weatherstripping at lock-side jamb, hinge-side jamb and head shall be 3/16 x 1-inch closed cell neoprene held in place on the frame by a stainless steel housing having a minimum thickness of 0.094-inch and a clear, mill finish. Weatherstripping shall be equal to Reese No. 373SS, Zero No. 139 or National Guard No. 130NSS.

C. For all exterior pairs of doors without a fixed astragal, weatherstripping shall be provided to seal the gap between the doors when they are closed. The weatherstripping shall be 3/8 x 7/8-inch neoprene held in place on the door by a stainless steel housing, having a minimum thickness of 0.094-inch and a mill finish. Astragal weatherstripping shall be equal to Reese No. 183SS series or National Guard No. 190NSS series.

D. Unless otherwise shown, sill weatherstripping shall be provided by a heavy duty, automatic door bottom incorporating a stainless steel housing and a retracting, closed cell, neoprene plunger as the weather seal. Plunger shall close automatically with delayed action after the door closes and shall retract immediately when the door opens. Door bottom shall be adjustable and shall have full mortised construction. Door bottom shall be reversible to accommodate either right or left hinged door. Automatic door bottoms shall be equal to Reese No. 320 or National Guard No. 221NSS.

E. Closed cell neoprene shall be closed cell, neoprene, sponge rubber conforming to Military Specification R6130, Type II, Grade C.

F. All fasteners necessary for proper installation shall be provided and shall be brass or stainless steel.

Part 3 Execution

3.01 Installation

A. Surfaces to receive work in this Section shall be smooth, even, sound, thoroughly clean, dry and free of defects which would adversely affect application of this work. Surfaces which do not meet the tolerances or quality imposed within the Specifications, shall be repaired or replaced prior to initiating this work.

B. Install in strict accordance with shop drawings and the manufacturer's printed instructions.

C. Adjust automatic door bottoms for proper operation.

D. Protect all work of this Section until all related work is completed. Repair or replace damaged work at no additional cost to the Owner.

END OF SECTION

Part 1 General

1.01 Scope

This Section includes, but is not necessarily limited to, standards for cleaning and painting structures and equipment described in the Drawings and Specifications. Furnish all materials, equipment and labor necessary to complete the work.

1.02 Substitutions

To the maximum extent possible, all coatings shall be the products of a single manufacturer. Guidelines for determination of acceptability of product substitutions are given in Article 39 of the Instructions to Bidders. Contractors intending to furnish substitute materials or equipment are cautioned to read and strictly comply with these guidelines.

1.03 Submittals

A. All submittals shall be made in accordance with the requirements of Section 01340 of these Specifications.

B. The Contractor shall submit to the Engineer, for review, the following information concerning the materials the Contractor proposes to use in work covered by this Section:

1. A list of all components (paints or other materials) to be used in each painting system required herein.

2. A complete descriptive specification, including manufacturer's data sheet, of each component.

3. Prior to completing the purchase and delivery of the coating material selected by the Contractor, the Contractor shall obtain a letter from the material supplier stating that the selected material is suitable and compatible for application and use as directed under these Specifications, and that if properly applied will provide metal protection and a pleasing appearance for five years or longer.

4. A color chart for each product to be applied.

1.04 Project Meeting

Prior to ordering any of the materials covered under this Section, the Contractor, Engineer, painting subcontractor and paint manufacturer’s representative shall attend a progress meeting in accordance with the requirements of Article SC-15 of the Special Conditions, and review the work to be performed under this Section.

1.05 Painting Requirements

A. Finish paint all exposed surfaces except prefinished items, anodized or lacquered aluminum, stainless steel and copper surfaces. Exposures and surfaces are defined in 3.07 of this Section. Items to be left unfinished or to receive other types of finishes, such as tile, are specifically shown on the Drawings or specified.

1. Unpainted Products: Full field cleaning and priming will be performed in accordance with specification requirements for unpainted products. Maintain adequate equipment on the site to assure proper cleaning.

2. Shop Primed Products

   a. Manufactured products may be shop cleaned and primed. Shop cleaning must equal or exceed cleaning specified in the Painting Schedule. Clean as specified and reprime all abrasions, weld splatter, excessive weathering and other defects in the shop prime coating.

   b. Manufacturers furnishing shop primed products shall certify that cleaning was performed in accordance with Specification requirements and that the specified primer was used.

   c. Fully field clean and prime any shop primed products which the Engineer determines that were not cleaned in accordance with the Specifications prior to priming, that the wrong primer was applied, that the primer was applied improperly, or has excessively weathered, or that the product is otherwise unacceptable.

3. Finish Painted Products: Certain products may, with the approval of the Engineer, be furnished finish painted. Properly protect these products throughout the Project to maintain a bright and new appearance. If the finish surfaces are defaced, weathered or not of the selected color, repaint as necessary.

4. Existing Surfaces

   a. Properly protect existing finish painted items and surfaces from damage throughout the Project.

   b. Repair any damage to existing coatings repaired in accordance with the requirements of this Section, at no expense to the Owner.

5. Hardware: Remove all electrical plates, surface hardware, fittings and fastenings prior to painting operations. These items are to be carefully stored, cleaned and replaced upon completion of work in each area. Do not use solvent to clean hardware that may remove permanent lacquer finish.

1.06 Quality Assurance

A. Only those systems and components which are judged acceptable by the Engineer shall be utilized in the work covered by this item. No materials shall be delivered to the job site until the Engineer has evaluated their acceptability.

B. The following information shall be included on the label of all containers of materials supplied under this item:

1. Manufacturer's name.

2. Type of paint or other generic identification.

3. Manufacturer's stock number.

4. Color (if any).

5. Instructions for mixing, thinning, or reducing (as applicable).

6. Manufacturer's application recommendations.

7. Safety and storage information.

C. All coating material used on this Project shall be purchased specifically for this Project and furnished in new, unopened containers.

D. The Contractor shall obtain the Engineer's review of the first finished room, space, area, item or portion of work of each surface type and color specified. The first room, space, area, item or portion of work which is acceptable to the Engineer shall serve as the Project standard for all surfaces of similar type and color. Where spray application is utilized, the area to be reviewed shall not be smaller than 100 square feet.

1.07 Manufacturer’s Representative During Painting Operations

An authorized representative of each coating manufacturer shall be present at the start-up and weekly during painting operations. Such representatives shall instruct and observe the Contractor’s workers on the manufacturer’s application recommendations.

1.08 Testing Equipment

A. The Contractor shall furnish and make available to the Engineer the following items of testing equipment for use in determining if the requirements of this Section are being satisfied. The specified items of equipment shall be available for the Engineer's use at all times when field painting or surface preparation is in progress:

1. Wet film gauge.

2. Surface thermometer.

3. "Surface Profile Comparator" as published by SSPC (with magnifier and three discs).

4. "Visual Standard for Abrasive Blast Cleaned Steel", as published by SSPC (SSPC-VIS 1-89).

5. "Visual Standard for Power- and Hand-Tool Cleaned Steel", as published by SSPC (SSPC-VIS 3).

6. Holiday (pin hole) detector (low voltage).

7. Sling-psychrometer or other on-site device used to calculate relative humidity and ambient air temperature.

8. Magnetic dry film gauge, meeting the requirements of SSPC-PA2, Type I or Type II, including calibration.

9. “Guide and Reference Photographs for Steel Surfaces Prepared by Waterjetting” as published by SSPC (SSPC-VIS 4).

1.09 Product Handling

A. Delivery

1. Deliver materials in original, sealed containers of the manufacturer with labels legible and intact.

2. Each container shall be clearly marked or labeled to show paint identification, date of manufacture, batch number, analysis or contents, and special instructions. At all times a copy of every component’s MSDS shall be available.

B. Storage

1. Store only acceptable Project materials on the Project site.

2. Store material in a suitable location and in such a manner as to comply with all safety requirements including any applicable federal, state and local rules and requirements. Storage shall also be in accordance with the instructions of the paint manufacturer and the requirements of the insurance underwriters.

3. Restrict storage area to paint materials and related equipment.

4. Place any material, which may constitute a fire hazard, in closed metal containers and remove daily from the Project site.

C. Material Safety Data Sheets: A copy of every component’s MSDS shall be available at all times on the Project site.

1.10 Material Schedules

Material Schedules at the end of this Section list prime coats, intermediate coats, finish coats and cover coats that comprise a complete and compatible system of surface protection for the particular substrate. Maintain the unity of these systems, making sure all coats applied to any surface are from the same system and same manufacturer. Verify with the manufacturer the compatibility of the materials used.

Part 2 Products

2.01 Abrasive Material

The abrasive used in the abrasive cleaning shall be a material acceptable to the regulatory agencies of the State of Georgia for use in the described work. The material shall be of a shape and size to produce a uniform surface of acceptable profile to properly bond the prime coat.

2.02 Coating Materials

A. Acceptable Manufacturers: The only acceptable manufacturers and products shall be those listed in the Material Schedules at the end of this Section.

B. All applicable data currently published by the paint manufacturer relating to surface preparation, coverages, film thickness, application technique, drying and overcoating times is included by reference as a part of this Section. It is the responsibility of the Contractor to obtain and fully understand the appropriate data sheets for the coatings specified.

C. Products

1. Paints shall be factory mixed and delivered to the site in unbroken original packages bearing the manufacturer's name and brand designation and shall be applied in strict accordance with the manufacturer's printed specifications. Two-component coatings shall be mixed in accordance with manufacturer's instructions. All two-component coatings, once mixed, shall be applied within the pot-life recommended by the manufacturer.

2. Unless otherwise specified, paints shall be of the best grade. All thinners, driers, varnish, etc., shall be of the best grade and shall be furnished by the coating manufacturer for use with the specified paints.

D. Colors: The Owner shall select the colors to be used on the various portions of the work. Provide color cards for the coatings proposed. Where more than one coat of paint is required, job tint off-shade the paint for each undercoat to show complete coverage.

2.03 Mixing and Tinting

A. When possible, all paints and other materials shall be mixed and tinted by the paint manufacturer prior to delivery to the job site.

B. When job site mixing and/or tinting is required, the manufacturer's recommendations shall be strictly adhered to. The Contractor shall be solely responsible for the proper conduct of all on-site mixing and/or tinting.

2.04 Pipe and Equipment Identification

Different colors will be used on pumps, motors, valves, piping systems and other surfaces as shown in Table 1.

2.05 OSHA Safety Color Usage Guide

A. OSHA Safety colors, in accordance with ANSI Z3.1, shall be used for marking physical hazards and safety equipment and locations. The following OSHA Safety Color Usage Guide will be used in determining the coating color and type of marking required.

Safety Red	Safety Orange	Safety Yellow	Safety Green
		Physical Hazard CAUTION (Generally used with Black in checks or stripes)	Safety Equipment and Locations
Fire protection equipment	Exposed box housings	Unguarded edges of platforms	First aid kits and stretchers
Fire boxes	Exposed edges of pulleys, gears, etc.	Elevator door edges	First aid signs, dispensaries and drinking water stations
Extinguishers	Exposed box housings	Bollards	
Exit signs	Safety starting buttons	Pulley Blocks	
Sprinkler piping		Material handling equipment	
Portable containers of flammable liquids			
Emergency stop bars			

Part 3 Execution

3.01 General

A. Protect other surfaces from paint and damage. Furnish sufficient shields and protective equipment to prevent spray or droppings from fouling surfaces not being painted. Repair damage as a result of inadequate or unsuitable protection.

B. The Contractor's on-site representative shall keep a record of work performed each day and shall submit it to the Engineer weekly. The forms for this record will be furnished by the Engineer.

C. No coat of paint shall be applied until the surface has been inspected and accepted by the Engineer. The Contractor shall give at least 24 hours notice to the Engineer when cleaning is to be performed to prevent inspection delays. The Contractor shall provide the necessary access for inspection by the Engineer.

D. Shop applied prime coatings which are damaged during transportation, construction or installation shall be thoroughly cleaned and touched-up in the field as directed by the Engineer. The Contractor shall use repair procedures which insure the complete protection of all adjacent primer. The specified repair method and equipment may include wire brushing, hand or power tool cleaning, or dry air blast cleaning. In order to prevent injury to surrounding painted areas, blast cleaning may require use of lower air pressure, small nozzle and abrasive particle sizes, short blast nozzle, distance from surface, shielding and masking. If damage is too extensive or uneconomical to touch-up, then the item shall be re-cleaned and coated or painted as directed by the Engineer.

3.02 Cleaning Area

Construct a temporary shed no smaller than 40 feet wide and 60 feet long for field cleaning, including blasting and priming operations. Maintain this area for all painting operations until all such work has been completed and approved. Provide all fixtures and appurtenances required to perform the work, including fixtures to support the work off the ground and proper storage facilities.

3.03 Environmental Conditions

A. Environmental conditions which affect coating application include, but are not necessarily limited to, ambient air temperature, surface temperature, humidity, dew point and environmental cleanliness. Comply with the manufacturer's recommendations regarding environmental conditions under which coatings may be applied.

B. Surface preparation and cleaning of the exterior surfaces must be performed during periods of still air or only a slight breeze so that fallout of the dust produced does not drift onto adjacent property. The Owner reserves the right to temporarily stop the Contractor from exterior blasting (or painting) when by observation it is apparent that

the wind direction or velocity prevents compliance with this requirement. Any clean-up of fall-out on adjacent property shall be the responsibility of the Contractor.

C. All blast residue from the tank shall be properly disposed of off-site by the Contractor.

D. No paint shall be applied upon damp or frosty surfaces, or in wet or foggy weather. No paint shall be applied in temperatures below 40 degrees F, when freezing (32 degrees F) is predicted within 24 hours of application, or under temperature or humidity conditions not recommended by the manufacturer. However, in no case shall coatings be applied when the surface temperature is within 5 degrees F of dew point, and in no cases shall coating be applied over a damp surface.

3.04 Safety

A. General

1. The Contractor is responsible for the safety of all workers and subcontractors and suppliers performing work on this Project.

2. The Contractor shall protect the Owner, their agents, and the General Public from harm attributable to the Contractor's performance, or non-performance, of the work on this Project. The protection shall include, but not be limited to, providing the necessary safety equipment and instructions for its use by the Owner, and their agents.

3. The Contractor shall protect the existing structures and environment from damage attributable to the Contractor's performance, or non-performance, of the work on this Project.

4. The Contractor shall comply with the applicable standards of 29 CFR Part 1910 and 29 CFR Part 1926.

5. The listing of the following potential hazards shall in no way relieve the Contractor's responsibility for safety on this Project.

B. The interior of tanks may be considered a confined space hazard. Prior to the start of the Project, the Contractor shall confirm to the Owner in writing that the Contractor has training programs, trained personnel, and is otherwise in compliance with CFR 1910.146.

3.05 Surface Preparation

A. General: All surfaces shall be thoroughly clean, dry, and free from oil, grease or dust. All concrete shall have cured a minimum of 21 days before painting. All fabricated metal products shall have all weld flux and weld spatter removed and sharp peaks in welds ground smooth. The Engineer will inspect the surface preparation prior to the application of coatings. If the preparation is found to be satisfactory, a written order will be given to proceed with coatings.

B. Ferrous Metals: Standards for the surface preparation of ferrous metals required in the Material Schedules are the standards of the SSPC – The Society for Protective Coatings (SSPC, SP-1 through SP-10). Inspection of these surfaces will be evaluated by field comparison with visual comparator panels. These panels shall be securely wrapped in clear plastic and sealed to protect them from deterioration and marring.

C. Concrete Surfaces: For all concrete surfaces, the following surface preparation shall be employed:

1. CC-1 - Wash: Wash and scrub all surfaces with a solution of 1-1/2 ounces of soap chips and 1-1/2 ounces of trisodium phosphate in each gallon of water used. Flush away all soap and dirt with clean water. After this washing the surface will be re-checked and any rough areas not suitable for painting shall be sandblasted smooth.

2. CC-2 - Acid Etch: Surface preparation for painting shall not commence until 7 days after the concrete has been pronounced cured. Wash and scrub all surfaces with a solution of 1-1/2 ounces of soap chips and 1-1/2 ounces of trisodium phosphate in each gallon of water used. Flush away all soap and dirt with clean water and then etch the surface with a 15 percent or stronger solution of muriatic acid until an openfaced granular texture, similar to fine sandpaper, is obtained. Any areas that remain smooth are to be re-etched until the desired texture is achieved. Flush and scrub away with clear water all acid and loosened particles.

3. CC-3 - Blast Cleaning: Remove all form oil and dirt by washing the surface with a solution of 1-1/2 ounces of soap chips and 1-1/2 ounces of trisodium phosphate in each gallon of water used. Blast clean all laitance and other foreign material from the surface of the concrete until an openfaced granular texture similar to fine sandpaper is achieved. These results should be accomplished with blast cleaning similar to "brush blasting" steel surfaces.

D. PVC Pipe: Hand roughen pipe with 50 grit sandpaper and wipe with clean, wet cloth.

3.06 Application

A. Surface Preparation: After specified surface preparation, all surfaces shall be brushed free of dust or foreign matter. Surfaces shall be completely dry before any paint is applied. All voids, open or hollow places in masonry shall be repaired with an epoxy patching compound.

B. Application: Paint shall be evenly spread in the proper thickness, so that there shall be no drops, runs or saggings of the coating. Where runs and drops do occur, they shall be removed and the surface re-coated to the satisfaction of the Engineer. Sufficient time, as directed by the manufacturer, shall be allowed for the paint to dry before the application of succeeding coats.

C. Protection of Work Area: Use drop cloths or other suitable means to protect other surfaces of the structure or equipment in place. Upon completion of the work, remove all paint spots from surfaces as directed by the Engineer.

D. Inspection: The Engineer will inspect each coat prior to the application of subsequent coats. If the work is found to be satisfactory, a written order will be given to proceed.

E. Defective Work: Remove and replace, at the direction of the Engineer, any painting work found to be defective or applied under adverse conditions.

3.07 Painting Schedule

A. General: The Painting Schedule summarizes the painting systems to be applied to the various surfaces. Items which appear in the Painting Schedule are defined in following Paragraphs.

B. Exposure terms refer to the environmental conditions to which different surfaces may be exposed. A surface may exist in more than one exposure, e.g., an exterior wall can be categorized not only as "above grade", but also as "below grade", where the exposure is delimited by the grade line.

1. Interior: All surfaces within the confines of a building or other enclosure not constantly exposed to weather, including concealed surfaces subject to trapped moisture, heat or other deteriorating conditions and all surfaces exposed to view.

2. Exterior

a. Above Grade: All surfaces above finished grade and exposed to weather.

b. Below Grade: All surfaces below the finished grade line. Building surfaces with this exposure shall only be painted when they are structurally common with an interior surface, e.g. exterior walls of a dry pit, not the exterior wall of a below grade tank.

3. Submerged: All surfaces below a water surface or exposed to spray. Surfaces exposed to spray include all areas within 6-inches of maximum water surface in quiescent tanks and within 18-inches of maximum water surface in mixed or agitated tanks. Building surfaces with this exposure shall only be painted when surfaces above water level have an interior exposure.

C. Surfaces

1. Floors: Interior surfaces subject to foot or roller traffic.

2. Building Surfaces: All structural and architectural surfaces except floors. Building surfaces include, but are not limited to, doors and frames, windows and frames, floor doors and walls.

3. Piping: All plumbing and process piping and accessories including valves, fittings, pipe supports, electrical conduit and similar related items.

4. Equipment: All mechanical, electrical, and architectural equipment, items, and accessories installed in the work and not defined above. Equipment includes,

but is not limited to: pumps, motors, cabinets, ducts, tanks and process equipment.

D. Conduits on walls, equipment, structures, columns, beams, etc., shall be painted the same color as adjacent structure.

E. Shop primer used shall be from the same manufacturer as system selected by Contractor for field finish coating.

3.08 Material Schedules

Material Schedules list pretreatment coats, wash coats, seal coats, prime coats, intermediate coats, finish coats and cover coats that comprise a complete and compatible system of surface protection for the particular substrate. Maintain the unity of these systems, making sure all coats applied to any surface are from the same system and same manufacturer. Verify with the manufacturer the compatibility of the materials used.

3.09 Maintenance Materials

Furnish the Owner at least one gallon of each type and color of paint used for finish coats and one gallon of each type of thinner required. Containers shall be tightly sealed and clearly labeled.

3.10 Coating Repair

Where coatings have been damaged, the surfaces shall be cleaned and repainted. Surface preparation shall conform to SSPC-SP 11, and feathered into undamaged areas. Painting shall be performed as specified for the damaged surface.

Painting Schedule

Exposures	Surfaces	System Schedules				
		Concrete & Concrete Block Substrate	Non-Ferrous Metals Substrate	Ferrous Metals Substrate	Wood Substrate	Drywall Substrate
Interior	Floors	134	-	-	-	-
	Building Surfaces	134	-	144	-	160
	Equipment*	-	-	144	-	-
	Piping*	-	-	-	-	-
Exterior Above Grade	Building Surfaces		217	247	-	-
	Equipment*	-	-	247	-	-
	Piping*	-	-	-	-	-
Exterior Below Grade	Piping*	-	-	-	-	-
Secondary Chemical Containment	Chemical Exposure	534	-	-	-	-
	Piping*	-	-	-	-	-
	Equipment*	-	-	544	-	-
	Floors & Interior Walls	534	-	-	-	-

* See coating, lining, and/or painting paragraphs in individual piping or equipment Specification Sections.

Schedule Numbering Guide

First Number - Exposure		Second Number - Substrate		Third Number - Coating Type		Final Letter	
1	Interior and Weather Protected	1	Non-Ferrous Metals	1	Alkyd	S	Sewage
2	Exterior Weather Exposure	2	Wood	2	Asphaltic	W	Potable Water
3	Submerged in Potable Water but Protected from Sunlight or Chemical Exposure	3	Concrete, Concrete Block, Masonry	4	Epoxy	F	Floors
4	Submerged in Potable Water and Exposed to Sunlight	4	Ferrous Metals	5	Vinyl	C	Severe Chemical Exposure
5	Submerged in Wastewater or Chemical Containment or Chemical Exposure	5	Galvanized Ferrous Metals	6	Coal Tar		
6	Interior/Exterior	6	Drywall	7	Polyurethane		
		7	PVC Pipe	8	Acrylic		
				9	Zinc		
				0	Latex		

Material Schedules

System: 134
Type: Epoxy
Use: Interior Concrete and Masonry
Surface Preparation: CC-1

Coat	Minimum Dry Film Thickness (Mils)	Carboline	Tnemec	Induron	Ameron	Sherwin Williams
1st		Sanitile 600/600 TG	Epoxy-Masonry Filler 54-660	Polyfill Block Filler	Amerlock 400 BF	Kem Cati-Coat HS Epoxy Filler
2nd	4.0	Carboguard 890	Series 66 Hi-Build Epoxoline	Induraguard Epoxy	Amerlock Series	Macropoxy 646 FC Epoxy
3rd	4.0	Carboguard 890	Series 66 Hi-Build Epoxoline	Induraguard Epoxy	Amerlock Series	Macropoxy 646 FC Epoxy
System	8.0					

System: 144
Type: Epoxy
Use: Interior Ferrous Metal
Surface Preparation: SP-10

Coat	Minimum Dry Film Thickness (Mils)	Carboline	Tnemec	Induron	Ameron	Sherwin Williams
1st	3.0 – 5.0	Carboguard 890	Series 66-1211 Epoxoline Primer	PE-70 Primer	Amerlock Series	Macropoxy 646 FC Epoxy
2nd	4.0 – 6.0	Carboguard 890	Series N69-Color Hi-Build Epoxoline II	PermaClean II	Amerlock Series	Macropoxy 646 FC Epoxy
3rd	4.0 – 6.0	Carboguard 890	Series N69-Color Hi-Build Epoxoline II	PermaClean II	- - -	Macropoxy 646 FC Epoxy
System	12.0					

System: 160
Type: Latex
Use: Interior Drywall

Surface Preparation: Clean and Dry

Coat	Minimum Dry Film Thickness (Mils)	Carboline	Tnemec	Induron	Ameron	Sherwin Williams
1st	1.0	Sanitile 120	Self-Priming	AC-210	Self-Priming	Prep Rite 200 Interior Latex Primer
2nd	1.5 – 3.0	Carbocrylic 3359	Series 6 Tneme-Cryl	AC-230	Amercoat 220	Prep Rite 200 Interior Latex Flat
3rd	2.0	Carbocrylic 3359	Series 6 Tneme-Cryl	AC-230	Amercoat 220	Prep Rite 200 Interior Latex Flat
System	5.0					

System: 217
Type: Polyurethane
Use: Exterior Non-Ferrous Metals

Surface Preparation: SP-1

Coat	Minimum Dry Film Thickness (Mils)	Carboline	Tnemec	Induron	Ameron	Sherwin Williams
1st	4.0 - 6.0	Carboguard 890	Series 66-Color Hi-Build Epoxoline	Induraguard Epoxy	Amercoat 370 or 385	Macropoxy 646 FC Epoxy
2nd	2.0 - 3.0	Carbothane 134 HG	Series 1074-Color Endura-Shield II	Indurethane 6600 Plus	Amercoat 450 Series	Sherthane 2K Urethane
System	8.0					

System: 247 Surface Preparation: SP-10
Type: Polyurethane
Use: Exterior Ferrous Metal

Coat	Minimum Dry Film Thickness (Mils)	Carboline	Tnemec	Induron	Ameron	Sherwin Williams
1st	3.0	Carboguard 890	Series 66 Epoxoline	PE-70 Primer	Amercoat 370 or 385	Macropoxy 646 Epoxy
2nd	4.0 - 6.0	Carboguard 890	Series 66 Epoxoline	Induraguard Epoxy	Amercoat 370 or 385	Macropoxy 646 Epoxy
3rd	2.0 - 3.0	Carbothane 133 HB	Series 73	Indurethane 6600 Plus	Amercoat 450 Series	Sherthane 2K Urethane
System	11.0					

System: 534 Surface Preparation: CC-3
Type: Epoxy
Use: Chemical Containment and Chemical Exposure Concrete – Sodium Hypochlorite (12%)

Coat	Minimum Dry Film Thickness (Mils)	Carboline *	Minimum Dry Film Thickness (Mils)	Tnemec	Minimum Dry Film Thickness (Mils)	Ameron
Filler		Semstone 800 Primer	60.0	Series 218 Mortar Clad ,or; Series 201 Epoxoprime w/Fumed Silica		
1st	8.0 - 10.0	Semstone 800 Primer	6.0 - 10.0	Series 201 Epoxoprime	4.0 – 6.0	Amercoat 90HS
2nd	40.0 – 50.0	Semstone 870	25.0 - 40.0	Series 275 Stranlok	4.0 – 6.0	Amercoat 90HS
3rd			6.0 - 10.0	Series 282 Tneme-Glaze	4.0 – 6.0	Amercoat 90HS
System	58.0 – 70.0	* Reference Semstone 870 application procedure for filler mixing details use of aggregate (as required)	94.0 – 120.0		12.0 – 18.0	

System: 544
Type: Epoxy
Use: Chemical Exposure Ferrous Metal

Surface Preparation: SP-10

Coat	Minimum Dry Film Thickness (Mils)	Carboline	Tnemec	Induron	Ameron	Sherwin Williams
1st	4.0 - 6.0	Carboguard 890	Series N66 Hi-Build Epoxoline II	Perma-Clean II Epoxy	Amercoat 370	Macropoxy 646 NSF Epoxy
2nd	4.0 - 6.0	Carboguard 890	Series N69 Hi-Build Epoxoline II	Perma-Clean II Epoxy	Amercoat 370	Macropoxy 646 NSF Epoxy
3rd	4.0 - 6.0	Carboguard 890	Series N69 Hi-Build Epoxoline II	Perma-Clean II Epoxy	Amercoat 370	Macropoxy 646 NSF Epoxy
System	12.0					

Pipe Identification and Color Coding

	Paint Colors		
Pipe System	Pipe	Letters and Arrows	Stencil Text
Sodium Hypochlorite	Yellow w/Red Bands	Red	Sodium Hypochlorite
Chlorine Solution	Yellow	Black	Chlorine Solution
Plant Drains	Black w/White Bands	White	Drain
Potable Water	Light Blue	White	Potable Water (Cold) (Hot)
Non-Potable Water	Dark Green w/Yellow Bands	Yellow	Utility Water (Non-Potable)
Vents	Black	White	Vent (Plant)

Color Coding General Notes

1. All banding to be 2-inches wide and four feet on center.

2. Sample, drain, vent, metering, blowoff, decant, and hot lines shall be painted the same color combination as the piping system from which the line originates unless specified otherwise above. The additional pertinent text shall be applied to the pipe.

3. Insulated pipe, jacketed with canvas, shall be painted with the color combination specified above.

4. Insulated pipe, jacketed with aluminum and/or stainless steel shall have the jacket unpainted. When valves and fittings for such lines are not insulated, the valves and fittings shall be color coded.

5. Building service lines such as plumbing lines, HVAC lines, and electrical conduit, shall not be color coded but shall be painted the same color as the background construction.

6. All sludge lines not otherwise specified above shall be painted dark brown and stenciled as directed by the Engineer.

7. All polymer lines not otherwise specified above shall be painted pink and stenciled as directed by the Engineer.

8. All lettering shall be done in capital letters of approved size and type.

9. Legend symbols shall be applied on piping on every run and spaced not greater than 8 feet apart.

10. Text shall be applied on piping in the middle of pipe runs for runs under 50 feet or in one room, whichever is the least distance. On runs greater than 50 feet, text shall be applied at third points in the run and no more than 35 feet apart.

11. Pumps, chemical tanks and other items of equipment to be painted shall be painted a color corresponding to their service, in accordance with the above schedule.

END OF SECTION

Part 1 General

1.01 Scope (SHCLRRW-P-1,2,3; SHCLRSW-P-1,2,3,4,5,6; SHCLRFW-1,2)

A. Work described in this Section includes furnishing all labor, equipment, materials, tools and incidentals required for a complete and operable installation for constant speed sodium hypochlorite metering pumps. All equipment shall be installed and tested in accordance with these Specifications and the manufacturer's recommendations.

B. Pumping units shall include but not be limited to electric motor, pump head, control module and operator interface.

1.02 Design Requirements

A. Operating requirements for pumps shall be as shown in Table 1 of this Section.

B. Pumps shall be peristaltic, driven by a DC motor with integral gearbox, suitable for pumping of 12.5% sodium hypochlorite.

C. Pumps shall be totally enclosed in a NEMA 4X enclosure with pumphead guard.

D. The pump shall be positive displacement, self-priming, without glands and valves. The pump shall be capable of running dry without detrimental effects or damage.

E. P/10 ratio shall not exceed the following per tube size:

Tube Size	P/10 Ratio
12.0mm ID x 4.0mm wall thickness	2,054
17.0mm ID x 4.0mm wall thickness	1,284
17.0mm ID x 3.2mm wall thickness	1,284

1.03 Submittals

A. Submit shop drawings in accordance with the requirements of Section 01340 of these Specifications.

B. Shop drawings shall be prepared and assembled by the listed manufacturers. Shop drawings prepared and assembled by manufacturer's sales representatives, fabrication shops or other than the listed manufacturers will not be accepted.

C. Operation and maintenance manuals shall be furnished in accordance with the requirements of Section 01730 of these Specifications.

D. Submit manufacturer’s certification that all equipment furnished complies with all applicable requirements of these Specifications. .

E. Submit manufacturer's certificate of inspection of installation and startup.

1.04 Storage and Protection

Pumps shall be stored and protected in accordance with the requirements of Section 01611 of these Specifications.

1.05 Quality Assurance

A. The manufacturer shall assume unit responsibility for all items specified in this Section. Manufacturer must warrant all electrical and mechanical components in their scope of supply for a minimum period of five years. The maximum time period to repair or replace a pump shall be 14 days. The manufacturer shall be responsible for all coordination between components and provide all submittals, installation and start-up assistance and certifications on the equipment as a unit.

B. The manufacturer shall provide written certification to the Engineer that all equipment furnished complies with all applicable requirements of these Specifications.

Part 2 Products

2.01 Acceptable Manufacturers

A. Base Bid: Pumps shall be Model 620DuN/Re as manufactured by Watson-Marlow Bredel.

B. Alternate Bid: Pumps shall be I/P High Performance Pump Heads with I/P Brushless Process Drives manufactured by Masterflex.

2.02 Materials and Construction

A. The pump shall be manufactured using the following materials:

1. Housing: Powder-coated aluminum or stainless steel.

2. Roller Cover: Polyester, polyurethane or PPS.

3. Rotor Shoe or Pressing Rollers: 316 Stainless Steel.

4. Tube: Norprene or Marprene. Pressure rating 60 psig.

5. Bearings: Anti-friction, grease-lubricated, AFBMA L10 40,000 hours.

6. Drive Shaft: 304 Stainless steel.

7. Enclosure: NEMA 4X

B. System Connection: Suction and discharge connections shall be 3/4-inch male cam and groove.

C. Pump head shall be C-shaped design.

D. Drive Assembly

1. Pumps shall be driven by a gear motor.

2. Gear rating shall have a minimum AGMA Class II rating and a minimum service factor of 1.4. For designs where the pump bearings are integral to the gear housing, the service factor shall be a minimum of 2.0.

3. Gear motors shall be capable of continuous variable speed operation at any available speed.

E. Each pumping unit shall be capable of pulling 95 percent of full vacuum and shall have a metering accuracy of ±1 percent.

F. Sight glass or clear level indicators shall be provided for all oil reservoirs.

G. Each pump shall come equipped with a float-type tube fail sensor located in the pump head.

H. All tubing shall be manufactured by the pump manufacturer. Tubing material shall be compatible with 12.5% sodium hypochlorite.

2.03 Controls

A. Pump Manufacturer shall provide a NEMA 4X powder-coated control panel mounted to the pump enclosure. Power supplied to the panel shall be as shown in Table 1. All motor starters, variable speed drives, relays, timers, and other control devices required for control and operation of the equipment shall be mounted in the panel. Drives shall be as specified in Section 16489 of these Specifications. All controls shall operate on 120 VAC. Pump-mounted control panels must meet the following minimum requirements for operator interface functionality:

1. Backlit graphical LCD capable of up to four lines of text with up to 16 characters per line to display pump speed, running status, flow rate, and programming instructions.

2. Keypad for start, stop, speed increment, speed decrement, forward/reverse direction, rapid prime, and programming.

3. Menu driven on-screen programming of manual control, flow, and general programming.

4. Programmable “Auto Restart” feature to resume pump status in the event of power outage.

5. Programmable “Keypad Lock” to allow operator lockout of all keys except emergency start/stop.

6. Programmable “Maximum Speed” to allow operator to set the maximum speed of the pump within 0.1 - 265 rpm.

B. Remote System Interface: The panel shall be provided with 120 VAC Form C contacts, rated 10 Amps at 120 VAC, for remote status. It shall accept 120 VAC dry contacts for remote control. Analog signals for remote use shall be isolated 4-20 mA. The panel shall accept remote 4-20 mA signals for control. The remote System interface shall include the following points:

1. Remote Inputs:

   a. Analog 4-20 mA speed input with input signal trim and speed scalable of any part of the drive speed range.

   b. Contact closure input for run/stop.

2. Remote Outputs

   a. Run/Stop

   b. Forward/Reverse

   c. Auto/Manual

   d. Leak Detection

   e. Analog 4-20 mA speed output

2.04 Factory Testing

A. The manufacturer shall conduct an inlet vacuum test for each pump prior to shipment. The test will follow the below listed general guidelines. The assembled pump shall be tested running on air with the outlet fitting open to atmosphere.

1. Block the inlet with blind flange with vacuum gauge connected.

2. Run the pump for a minimum of 30 seconds or until the pump reaches or exceeds 28-inches of mercury vacuum.

3. If the pump fails to reach the specified vacuum, replace the tube, re-test and repeat the vacuum test. No pump shall be shipped that does not pass the vacuum test.

B. Provide written documentation prior to shipment stating that all pumps have passed the vacuum test with the vacuum achieved during testing.

2.05 Tools and Spare Parts

A. The manufacturer shall furnish two sets of any special tools required for dismantling the pump and/or required tools for replacement and repair of tubes.

B. The manufacturer shall provide the following spare parts. The parts shall be packaged and sealed for long-term storage.

1. Four of each type and size rotor shoe or pressing roller.

2. Two of each size and type pump tube element to replace the tube within the pump head.

3. Two, one-meter long flexible PVC tubes for connection of pump to suction and discharge process lines. Flexible tube shall have a 3/4-inch polypropylene female cam and groove fitting for connection to NPT adaptor for connection to process piping.

4. Two, 3/4-inch female cam and groove to 3/4-inch male NPT adaptors

2.06 Motors

A. Motors shall be as specified in Section 16489 of these Specifications.

B. The motor shall be sized to be non-overloading throughout the entire pump flow/pressure range.

2.07 Accessories

The pump manufacturer shall supply each pump complete with a cord and plug.

2.08 Shop Painting

All surfaces shall be cleaned, shop primed and painted in accordance with the requirements of Section 09900 of these Specifications.

Part 3 Execution

3.01 Installation

A. Installation shall be in strict accordance with the respective manufacturer's instructions and recommendations in the locations shown on the Drawings.

B. Installation shall include furnishing any required lubricants in accordance with the manufacturer's recommendations.

3.02 Field Painting

Field painting shall be in accordance with the requirements of Section 09900 of these Specifications.

3.03 Inspection and Testing

Following installation, operating tests will be performed to demonstrate to the Engineer that the pumps will function in a satisfactory manner. The Contractor shall make, at Contractor's expense, all necessary changes, modifications and/or adjustments required to ensure satisfactory operation.

3.04 Manufacturer's Services

A. Furnish the services of a factory representative for one, eight-hour day who has complete knowledge of proper operation start-up procedure and operational and maintenance requirements. The factory representative shall inspect the final installation and supervise a functional test of the equipment. The factory representative shall instruct the Owner's personnel in the proper operation of the equipment in accordance with a schedule approved by the Owner.

B. Furnish a certificate of inspection from the factory representative stating that the installation has been inspected and approved. The certificate shall also state that the start-up procedure was properly executed.

C. The schedule of all services provided shall be in accordance with a schedule approved by the Owner.

3.05 Cleaning

Prior to the acceptance of the work of this Section, thoroughly clean all installed materials, equipment and related areas in accordance with the requirements of Section 01710 of these Specifications.

TABLE 1

PERISTALTIC TYPE TUBE PUMPS

Equipment No.	SHCLRRW-P-1,2,3	SHCLRSW-P-1,2,3,4,5,6	SHCLRFW-1,2
Feed Location	Raw Water	Settled Water	Finished Water
Rated Capacity, gph	117	117	117
Minimum Capacity Turn Down	300:1	300:1	300:1
Rated Discharge Pressure, psig	25	25	25
Maximum RPM at Max Flow	220	220	220
Horsepower	1/3	1/3	1/3
Voltage	120	120	120

END OF SECTION

Part 1 General

1.01 Work Included

Work described in this Section includes furnishing all labor, equipment, materials, tools and incidentals required for a complete and operable installation for magnetic drive, frame-mounted (Vanton) or close-coupled (Fybroc), end suction centrifugal chemical transfer pumps. All equipment shall be installed and tested in accordance with these Specifications and the manufacturer's recommendations.

1.02 Design Requirements

A. Operating requirements for the pump shall be as shown in Table 1 of this Section.

B. Pump shall be for horizontal installation.

C. Pump shall have the following additional requirements:

1. The pump and motor shall be mounted on a common base.

2. The motor shall be sized to be non-overloading throughout the pump range and the maximum motor speed shall be 1,800 rpm.

3. Materials of construction shall be appropriate for the chemical being handled.

4. Pumps shall be magnetically driven. Design shall be such that the pump will not de-couple under load.

5. Pumps shall isolate the pumped fluid so that it does not come into contact with pump components that can be damaged by the pumped fluid.

6. The pump shall require no water flushing or external oiling for any components.

1.03 Submittals

A. Submit product data and shop drawings in accordance with the requirements of Section 01340 of these Specifications.

B. Operation and maintenance manuals shall be furnished in accordance with the requirements of Section 01730 of these Specifications.

C. Submit manufacturer’s certificate of inspection of installation and startup.

1.04 Storage and Protection

Pumps shall be stored and protected in accordance with the requirements of Section 01611 of these Specifications.

1.05 Quality Assurance

The manufacturer shall provide written certification to the Engineer that all equipment furnished complies with all requirements of these Specifications.

Part 2 Products

2.01 Acceptable Manufacturers

A. Acceptable manufacturers are as specified below:

1. Chemical pumps shall be model CGM as manufactured by Vanton or model 2530 as manufactured by Fybroc.

2.02 Materials and Construction

A. The pump casing shall be fiberglass reinforced vinyl ester, polyvinylidene fluoride or polypropylene.

B. The impeller shall be constructed of fiberglass reinforced vinyl ester or thermoplastic resistant to the intended chemical service.

C. The pump shaft shall be silicon carbide or stainless steel.

D. Pump base shall be rigidly constructed of a corrosion resistant material for the chemical service.

E. The magnet drive shall utilize high strength neodymium iron boron or permanent rare earth magnets. The inner magnet rotor assembly shall be constructed of fiberglass reinforced vinyl ester or encapsulated in Teflon.

F. Pump discharge and suction flanges shall conform to the requirements of ANSI/ASME B16.5, Class 150.

2.03 Motors

Motors shall be as specified in Section 16150 of these Specifications and as indicated in Table 1 of this Section.

2.04 Controls

A. The pump shall be provided with a local disconnect per NEC and as specified in Division 16050.

B. The Contractor shall furnish and install all electrical work and equipment required for a complete and operable installation as shown on the Electrical Drawings and as specified in Division 16 of these Specifications.

2.05 Tools and Spare Parts

A. The following spare parts shall be furnished for each pump:

1. One impeller
2. Two ball bearings
3. One set of O-rings
4. Two inner thrust bearings
5. Two outer bearings

2.06 Shop Painting

All materials specified under this Section shall be shop primed as part of the work under this Section. Surface preparation and paint shall be as specified in Section 09900 of these Specifications.

Part 3 Execution

3.01 Installation

A. Installation shall be in strict accordance with the respective manufacturer's instructions and recommendations in the locations shown on the Drawings.

B. Installation shall include furnishing any required oil and grease in accordance with the manufacturer's recommendations.

C. Anchor bolts, if required, shall be stainless steel and shall be set by the Contractor, for installation under Division 3, in accordance with the manufacturer's recommendations and revised shop drawings.

3.02 Inspection and Testing

Following installation, operating tests will be performed, demonstrating to the Engineer that each mechanism and the system as a whole will function in a satisfactory manner. The Contractor shall make, at Contractor's own expense, all the necessary changes, modifications and/or adjustments required to ensure satisfactory performance.

3.03 Field Painting

All shop primed surfaces shall be cleaned and painted as specified in Section 09900 of these Specifications.

3.04 Manufacturer Service

A. Furnish the services of a factory representative for one, eight-hour day who has complete knowledge of proper operation start-up procedure and operational and maintenance requirements. The factory representative shall inspect the final installation and supervise a functional test of the equipment. The factory representative shall instruct the Owner's personnel in the proper operation of the equipment in accordance with a schedule approved by the Owner.

B. Furnish a certificate of inspection from the factory representative stating that the installation has been inspected and approved. The certificate shall also state that the start-up procedure was properly executed.

Table 1
Operating Requirements

Equipment Tag No.	SHCLR-P-1,2
Type	End Suction Centrifugal Magnetic Drive
Service	90 degree sodium hypochlorite (12.5% concentration)
Rated Capacity, gpm	130
Rated Head, feet	24
Maximum RPM	1,800
Horsepower	3
Minimum Shutoff Head, feet	40
Maximum Runout Head, feet	16
Maximum Capacity @ Runout, gpm	170

END OF SECTION

Part 1 General

1.01 Scope (SMP-P-1,-2)

Work described in this Section includes furnishing all labor, materials, equipment, tools and incidentals required for a complete and operable installation of two sump pumps. All equipment shall be installed, tested and placed in operation in accordance with these Specifications and the manufacturer's recommendations.

1.02 Factory Testing

A. The pump manufacturer shall perform the following inspections and tests on the pump, before shipment from the factory:

1. A motor and cable test for moisture content and insulation defects.

2. Prior to submergence, the pump shall be run dry to establish correct rotation and mechanical integrity.

3. The motor and cable shall then be tested a second time for moisture content and insulation defects.

4. A written certification that these tests have been performed shall be provided with the pump at the time of shipment.

5. After testing, the pump cable end shall be suitably protected for shipment and installation.

1.03 Submittals

A. Submit shop drawings and engineering data in accordance with the requirements of Section 01340 of these Specifications. Indicate the following:

1. Manufacturer's name, pump size and model number and description bulletin of the pump furnished.

2. Outline dimension of the pump.

3. Pump characteristic curves showing head, capacity, horsepower, minimum head, rated and shut-off conditions.

4. Motor manufacturer's name, motor horsepower, rpm, frame size and motor descriptive information. Include motor features and data sheet.

B. Operation and maintenance manuals shall be furnished in accordance with the requirements of Section 01730 of these Specifications.

1.04 Storage and Protection

Pumps shall be stored and protected in accordance with the requirements of Section 01640 of these Specifications.

1.05 Quality Assurance

The manufacturer shall provide written certification to the Engineer that all equipment furnished complies with all applicable requirements of these Specifications.

Part 2 Products

2.01 Acceptable Manufacturers

Sump pumps shall be manufactured by Vanton or Fybroc.

2.02 Operating Requirements

A. Operating requirements for the sump pump shall be as outlined in Table 1 of this Section.

B. The operating range of the pump shall include minimum head, rated and shut-off conditions. The pump shall be non-overloading throughout this operating range.

2.03 Sump Pump

A. General

1. The sump pump shall be a vertical, electric motor driven pump constructed of corrosion-resistant materials. Pump discharge connection shall be screwed and of the size shown on the Drawings. Pump shall be furnished with feet or with pedestal stand.

2. The water to be pumped may contain chemical leakage from sodium hypochlorite piping. The system shall be provided with a control panel. Pump design and construction shall minimize solution-to-metal contact. All wetted materials shall be constructed of thermoplastic-resistant materials resistant to the intended chemical service.

B. Casing: Casing, bolts, and nuts shall be of molded, heavy section, solid thermoplastic, titanium or fiberglass/vinyl ester.

C. Strainer: Provide strainer of same materials of construction as casing for mounting below casing to prevent entry of particles greater than 1/4-inch diameter into impeller area.

D. Impeller: Impeller shall be constructed of tough corrosion-erosion resistant thermoplastic or fiberglass and dynamically balanced to provide vibration-free service.

Impeller shall be closed design with radial vanes on the impeller backside to direct flow through the sleeve bearing area.

E. Shaft: Shaft shall be large diameter, 304 stainless steel construction, keyed to the impeller, and designed for minimum deflection. Shaft shall be encased in a heavy plastic or fiberglass sleeve which completely isolates the shaft from the liquid being pumped.

F. Bearings

1. Shaft bearings shall be sleeve type with an ultra-pure ceramic inner sleeve and outer sleeve of Vanite (Vanton) or Teflon and carbon-filled Polyphenylene Sulfide (PPS) (Fybroc). Provide 1/4-inch water supply line with solenoid valve to supply water to shaft bearings.

2. Outboard bearing shall be a combination radial and thrust ball bearing assembly, equipped with a self-locking collar to permit adjustment without removing pump from installation. The ball bearing shall absorb all thrust created on the impeller.

2.04 Motor

A. The pump motor shall have the following characteristics: 1.15 service factor; continuous duty; submersible pump motor. Motors shall be 480 volt, 60 Hz, 3 phase unless otherwise specified or shown on the Drawings.

B. The pump motor shall be housed in a watertight housing and shall be suitable for continuous duty.

C. Cable: The power cable shall be of the type of construction suitable for submersion in sodium hypochlorite. Strain reliefs shall be provided at each cable entry into the pump. Cable length shall provide for installation as shown on the Drawings.

2.05 Controls

A. Control panel shall be furnished by the pump manufacturer. Designation is as shown in Table 1 of this Section.

B. Power Supply: 120 volts, single phase. All controls shall operate on 120 volts maximum. Provide a suitably sized control power transformer with primary and secondary overcurrent protection. Provide a control panel main disconnect switch.

C. Enclosure: NEMA 4X.

D. Components

1. Starters: NEMA rated, circuit breaker combination type with overcurrent protection in each phase. Interrupting capacity is a minimum of 40,000 amperes symmetrical. Equip each starter with loss of phase/phase unbalance relay for single phase protection.

2. Relays: Heavy duty industrial control type, 10 amp, 600 volt reversible contacts, equal to Square D, Class 8501, Type X.

3. Selectors and Indicating Lights: Heavy duty, oil-tight with octagonal ring.

E. Panel Construction: Route all wiring in Panduit or similar wireways. Protect all wiring across panel hinges. Provide numbered terminal strips for all field wiring terminations.

F. Maximum Dimensions: As shown on the Drawings.

G. Remote Signals: Provide from "C" dry contact for remote high level alarm indication.

H. Control Functions: Provide a Hand-Off-Auto selector switch and run light. Provide liquid level sensors as specified below for pump off, pump on, and high level alarm.

2.06 Accessories

Liquid Level Sensors: Furnish and install liquid level sensors of the non-floating, displacement type equal to Flygt ENH-10 (mercury tilt switches). Level sensors shall be rated for operation at 115 volt, 1 phase, 60 Hz. Provide sensors with lengths of cable for installation as shown on the Drawings.

Part 3 Execution

3.01 Installation

Installation shall be in strict accordance with the manufacturer's recommendations in the locations shown on the Drawings. Installation shall include furnishing the required oil and grease for initial operation. The grades of oil and grease shall be in accordance with the manufacturer's recommendations. Anchor bolts shall be set in accordance with the manufacturer's recommendations.

3.02 Surface Preparation and Shop Painting

Pumps and accessories shall be cleaned, shop primed and shop painted in accordance with the requirements of Section 09900 of these Specifications.

3.03 Field Painting

Field painting shall be in accordance with the requirements of Section 09900 of these Specifications.

3.04 Inspection and Testing

Following installation, operating tests will be performed to demonstrate to the Engineer that the sump pumps will function in a satisfactory manner. The Contractor shall make, at Contractor's expense, all necessary changes, modifications and/or adjustments required to ensure satisfactory operation.

3.05 Manufacturer Service

A. Furnish the services of a factory representative for one, eight-hour day who has complete knowledge of proper operation start-up procedure and operational and maintenance requirements. The factory representative shall inspect the final installation and supervise a functional test of the equipment. The factory representative shall instruct the Owner's personnel in the proper operation of the equipment in accordance with a schedule approved by the Owner.

B. Furnish a certificate of inspection from the factory representative stating that the installation has been inspected and approved. The certificate shall also state that the start-up procedure was properly executed.

3.06 Cleaning

Prior to acceptance of the work of this Section, thoroughly clean all installed equipment, materials and related areas in accordance with the requirements of Section 01710 of these Specifications.

TABLE 1

SUMP PUMP SCHEDULE

Equipment No.	SMP-P-1, -2
Rated Capacity, gpm	55
Rated TDH, feet	40
Minimum Shutoff Head, feet	46
Maximum Runout Head, feet	25
Maximum Capacity at Runout, gpm	100
Diameter Solids Handled, inches	0
Horsepower	2
Maximum RPM	1,800
Voltage	460
Fluid Pumped	12.5% sodium hypochlorite at 90 degrees F

END OF SECTION

Part 1 General

1.01 Scope

A. Provide inclined plate settler equipment consisting of stainless steel channels, plates, mounting embedments, and associated assembly hardware to be installed in four existing concrete basins, each measuring approximately 40-feet wide, 40 feet long and 30 feet deep as shown on the Drawings and herein specified for the Phase 2 treatment train. Reuse the existing launders (troughs) and weirs. Provide new anchor bolts, gaskets, caulking, sleeves and other hardware and connections on equipment that is removed and reused.

B. The overall configuration of each plate settler unit shall match the existing configuration and be such that the influent enters the plates through openings near the bottom of and along the side of the plates. Water shall flow up along the plates and into the existing effluent trough which are to be reinstalled above the plates.

C. Equipment provided under this Section shall be fabricated and installed in full conformance with the Drawings, Specifications, engineering data, instructions, and recommendations as furnished by the equipment manufacturer.

D. Provide the plate settlers complete, including all equipment, supports, hardware, and accessories required for proper operation and maintenance of the system. Coordinate the support frame design with the existing weirs, launders and concrete supports and with the existing basins to ensure that there are no conflicts with the new equipment.

1.02 Shop Drawings of Existing Equipment

A. Copies of original Shop Drawings for existing plate settlers in the four Phase 2 sedimentation basins are available upon request at the offices of Jordan, Jones & Goulding, 6801 Governors Lake Parkway, Norcross, Georgia 30071.

B. These Shop Drawings are offered as a convenience and an aid in bidding only and are not part of the Contract Documents. The Owner and Engineer make no warranty pertaining to the following: that these Shop Drawings are Record Drawings; that they accurately depict the actual construction or subsequent modifications; or, that they represent all areas of demolition required in the Contract Documents. Furthermore, the Owner and Engineer assume no responsibility for any variation between conditions and obstructions encountered during construction and those indicated on these Shop Drawings.

C. The Contractor is responsible for visiting the site and becoming acquainted with the physical conditions in or related to existing facilities prior to Bid and for satisfying themselves as to the existing conditions.

1.03 Design Criteria

A. Plate settler equipment shall be installed in the sedimentation basin and shall be designed to clarify flocculated water that has received chemical treatment through the addition of coagulant, polymer, pre-chlorination and pH adjustment chemicals for the production of potable water.

B. The equipment shall be designed for operation in ambient temperatures ranging from 32 to 115 degrees F.

B. The equipment shall be designed for the following requirements:

Parameter	Value
No. of Basins	4
Maximum Flow to a Basin, MGD	15.75
Average Flow to a Basin, MGD	11.25
No. of Rows of Plates per Basin	6
No. of Plate Packs per Row	3
No. of Plates per Pack	46
Plate Inclination, degrees from Horizontal	55
Plate length, ft	10
Plate width, ft	5
Maximum reaction at a single support, lbs	5,500
Effective Projected Plate Area, square feet	23,746
Minimum Plate Efficiency Factor*, %	95
Horizontal Plate Spacing, inches	2.0
Maximum loading rate of effective settling at 45 MGD, gpm/ft^2	0.375
Maximum loading rate of effective settling at 63 MGD, gpm/ft^2	0.500

*Plate efficiency factor shall be the percent of area of the plate provided that actually contributes to settling.

C. Seismic Standards: The plate settlers shall be provided in accordance with the 2006 International Building Code with 2009 Georgia Amendments for Seismic Site Class D.

D. Existing Basin: The plate settlers will be installed in the existing Phase 2 concrete sedimentation basins.

1. The existing basins have four concrete supports to support each row of plate packs, as shown on the Drawings. Protect and reuse the existing concrete supports. Furnish Drawings with loaded and unloaded equipment weights and structural reactions to demonstrate to the Engineer that the existing supports are adequate for the proposed equipment. The proposed design shall not interfere or cause changes to the existing support system, outlet channels, access ladders, or other items which may be influenced by the design and operation of the equipment furnished.

2. The manufacturer is responsible for furnishing anchor bolts and other connecting hardware in order to bolt the existing troughs and weirs onto the new plate packs and the new equipment into the basin. The manufacturer shall include connection details for the proposed equipment in the shop drawing submittals.

3. Cost for any necessary basin or plate settler support modifications for the selected equipment as specified or as recommended by the chosen equipment manufacturer shall be considered by the Contractor and included in the Bid price.

E. V-notch weirs shall be capable of discharging peak flow without submergence. The entire system shall be designed to evenly distribute flow to all the plates.

1.03 Submittals

A. Submit shop Drawings in accordance with the requirements of Section 01340 of these Specifications.

B. Operation and maintenance manuals shall be furnished in accordance with the requirements of Section 01730 of these Specifications.

C. Submit to the Engineer for review the following information:

1. Complete submittals confirming equipment dimensions, materials of construction, leveling information, and dimensions required for Contractor installation, as well as warranties, design calculations, and sealed Drawings.

2. Conformance with ANSI/NSF61 classification.

3. Drawings detailing the support frame. Drawings must bear the seal of a Professional Engineer registered in the State of Georgia.

D. Design calculations at average and maximum flow including:

1. Effective plate area calculations

2. Orifice/headloss

3. Loading rates

E. The manufacturer shall submit proper cleaning and disinfection techniques and procedures to be used by the Contractor after installation.

F. The manufacturer shall provide written certification to the Engineer that all equipment provided complies with all applicable requirements of these Specifications.

1.04 Storage and Protection

A. Equipment shall be stored and protected in accordance with the requirements of Section 01611 of these Specifications and the manufacturer's recommendations where recommendations are more stringent or not specifically addressed within these Specifications.

B. Wooden blocking shall be provided to prevent noticeable sagging of the stored materials between supports and to prevent deterioration of channels and plates. Absolutely no iron or steel tools shall be allowed in handling of stainless steel components.

C. Once installed, all equipment shall be covered or otherwise protected from paint, grinder spatter, concrete or other contaminants that may affect corrosion resistance or aesthetics of the stainless steel plates.

1.05 Quality Assurance and Experience

A. All welding shall be done in accordance with the recommendations of the American Welding Society. All welding shall be done by a process (i.e., TIG or MIG) suitable for the materials to be welded. Use continuous welds for all seal and structural support welds. Welds shall be free of porosity, cracks, holes, and flux. All weld spatter and burrs shall be removed. All welds shall be uniform in appearance. Sharp projections of cut or sheared edges shall be ground to a radius as required. Welding shall be performed by welders who have qualified within the previous year in accordance with the American Welding Society requirements.

B. The manufacturer shall have a minimum of five years experience in design of countercurrent-type plate settlers in an application as described.

1.06 Warranty

Warrant all equipment supplied under this Section to be free from defects in material and workmanship under normal use and service for a period of not less than 5 years.

Part 2 Products

2.01 Acceptable Manufacturers

The settler system shall be manufactured by Parkson Corp., Nordic Water Systems or Meurer Research, Inc.

2.02 Materials and Construction

A. The plates, stiffeners, and associated equipment shall be fabricated of material meeting the following criteria unless otherwise specified:

1. Shapes and Bars: AISI 304.

2. Plate: AISI 304.

3. Bolts, Nuts and Fasteners: IFI-104 Grade 303, 304 or 305.

4. Flat Washers: ANSI B18.22.1, same material as bolts.

5. Thread Lubricant: Food grade equal to Permatex "Nickel Anti-Seize".

B. All new hardware for the reinstalled weirs and troughs to be AISI 316 stainless steel. All new hardware for the frames to be AISI 316 stainless steel.

C. Maximum allowable carbon content of stainless steel materials shall be 0.05 percent. No carbon steel components will be permitted.

D. Epoxy-grouted anchor bolts, embedments, nuts and washers shall be completely detailed and supplied by the equipment manufacturer.

2.03 General

A. All equipment shall be designed for continuous, twenty-four hour operation, and all parts of the mechanism shall be amply proportioned for all stresses which may occur during fabrication, erection, and operation.

B. All anchor bolts for the new equipment shall be 304 stainless steel and shall be of ample size and strength for the purpose intended. All bolts shall be provided with the equipment and set by the Contractor in accordance with the manufacturer's instructions.

2.04 Plates/Plate Packs

A. Plates and frames shall be delivered as fully assembled plate packs according to the table in Part 1.02 of this Section.

B. The plates shall be fabricated from 304SS, having a 24-gage thickness. Plate stiffeners shall be fabricated from 304SS with a minimum thickness of 3/16-inch. If stiffeners are to be used, the maximum spacing of stiffeners shall be 30-inches center-to-center.

C. Plate pack frames shall be constructed from 316 stainless steel of a minimum thickness of 3/16-inch.

2.05 Existing Equipment

A. Effluent Troughs and Weirs: The plate settlers shall utilize the existing 316 SS effluent troughs and V-notch weirs. The Contractor shall coordinate with the equipment manufacturer to ensure that the new plate packs are compatible with the existing effluent troughs and weirs.

B. Embedments

1. Reinstall the existing flumes at the existing concrete wall embedment gusset plates. The equipment manufacturer shall make provision to allow a minimum of 1/2-inch of movement due to the thermal expansion and contraction of channels at the effluent end of the basin.

2. The effluent end shall be field welded into place or gasketed at wall openings to form a watertight seal as recommended by the manufacturer and acceptable to the Engineer.

2.06 Cleaning and Passivating

A. The stainless steel fabricated channels in their entirety shall be passivated prior to shipment. Glass bead blasting is not a substitute for passivation. The plates shall be cleaned after their forming. Field welds shall be passivated prior to equipment being placed in service.

B. All cleaning and passivating shall be performed in accordance with the recommendations of the manufacturer. After cleaning, the equipment shall be covered or otherwise adequately protected from surface contamination during shipping, storage and installation.

Part 3 Execution

3.01 Construction Sequence

The construction sequence shall be in accordance with Section 01011 of these Specifications.

3.02 Inspection

Inspect all equipment prior to erection. Repair or replace damaged items as directed by the Engineer, at no additional cost to the Owner. Have only factory-trained manufacturer's representative perform repair work.

3.03 Installation

A. General: Install plate settlers, effluent troughs, and effluent weirs on existing beams in accordance with the Manufacturer's instructions and recommendations. Provide all new Neoprene gaskets and sleeves and connecting hardware. All material in contact with the water during operation shall be NSF-61 approved.

B. Existing Support Beams: Cut off the anchors flush with the concrete beams supporting the plate settlers. Patch the area as required to provide a smooth and even surface according to Section 09900 of these Specifications. Coordinate the

locations of existing anchors with the Manufacturer. Install new anchors for plate settlers using new anchoring points.

C. Existing Plate Settlers: Avoid twisting or stressing the effluent troughs and weirs. The Contractor is required to notify the Engineer immediately if the reused plate settler materials are damaged or bent at any time.

D. New Plate Settler Packs: Use a spreader beam or another method as recommended by the Manufacturer to install each plate settler pack. All plate settler packs should be aligned, leveled and fastened to the existing flumes following manufacturer's instructions.

E. Disposal of Existing Plate Settlers: Existing plate settlers shall be removed from the site according to the provisions in Section 02073 of these Specifications.

F. Visually examine all discharge weirs to verify proper leveling and flow splitting. Visually verify that V-notch weirs are capable of discharging peak flow without submergence.

3.04 Field Painting

No field painting of the basin or plate settlers is permitted.

3.05 Manufacturer Service

A. Furnish the services of a factory representative for two, eight hour days during the installation phase of the equipment for one entire basin. The factory representative shall have full knowledge and experience in the installation of the type of equipment being installed.

B. Furnish the services of a factory representative, having complete knowledge of proper operation start-up procedure and maintenance requirements, for two, eight hour days, to inspect the final installation and supervise initial operation of the equipment.

C. Furnish the services of a factory representative, having complete knowledge of the operational and maintenance requirements of the system, for one, eight hour day, to instruct the Owner's personnel in the proper operation of the equipment.

3.06 Start-Up

A. The Contractor shall coordinate the start-up test period schedule and duration with the Owner and manufacturer's representative.

B. The Owner shall collect the following data during a 2-day start-up period, under the supervision of the manufacturer's representative:

Parameter	Sample Frequency
Effluent Basin Flow	Hourly
Raw Water (influent) Turbidity	Every Four Hours
Settled Water (effluent) Turbidity	Every Four Hours

C. The Manufacturer shall be responsible for reviewing the data collected during start-up to verify conformance with Section 1.03 design criteria. The Contractor shall be responsible for making corrections to the installation as required by the manufacturer to meet design criteria.

D. Contractor shall provide a final start-up test report to the Owner with verification of performance data and results as required to demonstrate that the installation meets specified requirements.

3.07 Cleaning and Disinfection

Prior to acceptance of the work of this Section, thoroughly clean and disinfect all installed materials, equipment and related areas in accordance with the requirements of Sections 01710 and 02675 of these Specifications and as described by the manufacturer in the shop drawing submittal.

END OF SECTION

Part 1 General

1.01 Scope

A. Phase One Filters - (Filters 1 through 12)

Work described in this Section includes removal of existing filter underdrain from twelve existing dual bay filters and furnishing all labor, materials, equipment, tools and incidentals required for the complete and operational installation of underdrains and porous caps for the filters. Each unit shall be installed, tested and placed into operation in accordance with these Specifications.

B. Phase Two Filters - (Filters 13 through 24)

Work described in this Section includes removal of existing filter media and furnishing all labor, materials, equipment, tools and incidentals required for the complete and operational installation of new porous caps on the existing Leopold Type "S" underdrains. Each unit shall be installed, tested and placed into operation in accordance with these Specifications.

1.02 Design Requirements

A. The supplied equipment shall be designed to operate under the following conditions:

1. Upflow of Air Only (Air Wash): 4.4 standard cubic feet per minute per square foot (scfm/ft^2).

2. Simultaneous Upflow of Air and Water: 4.4 scfm/ft^2 (air) and 5 gpm/ft^2 (water).

3. Upflow of Water Only (Backwash): 22 gpm/ft^2.

B. All materials shall be non-corrosive, exposed metals shall be 304 stainless steel.

C. Equipment furnished for each filter shall include an air/water underdrain (Phase 1 only), media support porous cap (Phases 1 and 2), and any necessary equipment required for a complete installation for both Phases.

1.03 Submittals

A. Submit shop drawings in accordance with Section 01340 of these Specifications.

B. Furnish to the Engineer for approval and delivery to the Owner, six copies of the Operations and Maintenance Manual. Include the following in each manual:

1. Complete installation, operation and maintenance instructions.

2. Troubleshooting guides.

3. Copies of all shop Drawings and erection Drawings.

C. Certification shall be furnished in accordance with the requirements of Section 01655 of these Specifications.

Part 2 Products

2.01 Acceptable Manufacturers

Equipment furnished shall be Type "S" as manufactured by F.B. Leopold Company. No substitutions permitted.

2.02 Filter Underdrain

A. Experience: The Contractor shall have installed a minimum of 5 underdrain systems within the last ten years in the United States. Upon request, the installer shall provide the Engineer with a list of installations of underdrain which total not less than 10.

B. NSF Certification: All materials used in contact with the water and backwash air shall meet National Sanitation Foundation (NSF) Standard 61 Drinking Water System Components - Health Effects.

C. Operating Requirements

1. The filter underdrain system shall be designed and installed to insure long term stability in its operating characteristics. It shall be resistant to changes in headloss, flow uniformity and any other effects which would in time cause loss of efficiency or effectiveness in its operation.

2. The underdrain system for the filters shall be of the "Dual-Parallel Lateral" type whereby feeder and compensating laterals are provided in a single block system. The cross section of the underdrain shall be so arranged that the feeder (or primary) lateral is adjacent and connected to the compensating (or secondary) laterals through a series of orifices. The orifices shall be located at four different elevations and sized to provide uniform distribution of air at a rate in the range of 4 to 5 scfm/ft^2 and water up to 30 gpm/ft^2. The feeder lateral shall provide at least 50 square inches of cross sectional area per block to reduce flow velocity during backwash.

3. The compensating laterals shall provide the essential uniform pressure and flow distribution from the top of the blocks. The discharge flow from the top of the blocks into the filter bed shall be provided by uniformly distributed dispersion orifices throughout the filter cell. The orifices shall be sized as required to introduce necessary metering headlosses, but shall be sufficiently large to prevent clogging.

4. A water recovery channel with return holes or other design measures shall be incorporated into the underdrain block to ensure uniform and continuous air flow from the top deck orifices and greater stability. The secondary chambers of the

underdrain shall have baffles sized and located to provide effective air control and to reduce level sensitivity.

D. The individual blocks used in the system shall be of a suitable impervious, high strength, completely corrosion resistant plastic material having uniform smooth surfaces and all orifices properly deburred. The blocks shall have ridges and pockets for structural rigidity and to key into surrounding grout. The blocks shall be mechanically joined to form a continuous lateral equivalent to the length of the filter cell. The joints shall be gasketed, bell-and-spigot type with internal tabs, air and watertight. Joints shall be snap-lock type so that the blocks are joined with internal interlocking snap lugs and lug receptors.

E. Grout retaining strips shall be of high-impact polystyrene properly keyed to the underdrain blocks to allow adjustment of lateral center-to-center distance without difficulty. Retaining strips shall be supplied by the underdrain manufacturer.

F. Anchor hardware shall be sized, dimensioned and supplied by the underdrain manufacturer.

G. Grout used during installation of the underdrains shall be approved by the underdrain manufacturer and installed in strict accordance with the underdrain manufacturer's recommendations.

H. The plastic underdrain shall be high-strength, completely inert, resistant to erosion and corrosion, and be suitable for use with backwash air temperatures up to 200 degrees F.

I. The filter underdrain system, when installed, shall be designed to withstand a burst pressure equal to twice the maximum headloss experienced at maximum backwash rates. No credit shall be taken for the weight of filter media.

J. The filter underdrain system shall also be designed to withstand a net downward loading of not less than 1,400 pounds per square foot (psf), plus its own dead weight.

K. Hydraulic Criteria

1. The filter underdrain shall be capable of evenly distributing air, water and a combined flow of air and water in the intended application. When subjected to a combined air/water flow of 4.4 scfm/ft^{2}and 5 gpm/ft^2, the headloss through primary distribution orifices shall not exceed 8-inches w.c. When subjected to a flow rate of 20 gpm/ft^{2}of filter area (water only), the headloss through an underdrain lateral 28 feet long shall not exceed 40-inches water column (w.c.) when the water temperature is approximately 60 degrees Fahrenheit. The filter manufacturer shall provide hydraulic test data to verify that the above headloss conditions can be met.

2. In addition to the above, the filter manufacturer shall, at their own facilities, if requested by the Engineer, set up a test lateral run of equal length to that required by the Project and provide an opportunity for the Engineer and/or Owner to visit the facility to witness a full scale demonstration of the headloss and flow distribution during backwash.

3. The test facility shall be capable of demonstrating concurrent air and water distribution in a submerged trough and water only distribution on a non-submerged test bench.

2.03 Porous Media Support Cap

A. Filter underdrains shall utilize a porous cap to support the media. Gravel shall not be used.

B. The porous media support cap shall be made of plastic beads sintered together. The support cap shall be mechanically attached and sealed to the underdrains. The pores shall be of size that the media being supported does not “sift” through the cap and into the underdrain area during static (weight of media and water) or backwashing conditions. The cap shall be attached to the underdrain at the factory for Phase One and on-site for Phase Two filters by 316 stainless steel self-tapping screws and sealed with Leoflex™ caulking. The cap shall be designed to withstand a differential flow pressure of 5 pounds per square inch gage (psig) from either direction.

Part 3 Execution

3.01 Specialty Installation

A. The Contractor shall install the filter underdrain systems in strict accordance with the installation drawings and recommendations and as herein specified.

B. Construction Sequence: The construction sequence shall be in accordance with Section 01011 of these Specifications.

3.02 Filter Underdrains

A. The Contractor shall take all necessary precautions recommended by the underdrain manufacturer and as specified herein to ensure that the underdrain system and piping connected thereto is completely clean and free of any debris, dirt, or other foreign materials which would clog the underdrain system or interfere with flow. Backwash air piping and water channels shall be thoroughly flushed clean. Air piping and water channels shall be flushed with air only. All loose debris and dirt within the filter cell and flume shall be removed by brooming down and vacuuming. Care shall be taken as necessary to prevent grout from extruding into any flow passages or ports, and any such grout shall be removed. As installation progresses, underdrain sections partially

completed shall be protected with heavy building paper, vinyl sheeting, or other acceptable means to maintain cleanliness. Cleanliness shall be maintained until final placement of filter media.

B. The filter underdrain sections shall be set in place and grouted such that the air metering orifices are in a true and level plane within plus or minus 1/8-inch. The filter base slab shall be prepared as necessary to enable installation within the required level tolerance.

C. After the underdrain sections are set in place, all grouting spaces shall be completely filled to within 1/2-inch of the top surface of the underdrain, and finished off smooth.

D. Each filter cell shall be both hydraulically and air washed to check uniform water and air distribution prior to the placement of filter media.

3.03 Preparation of Filters for Service

A. After all filter materials have been placed and initially backwashed, each filter shall be backwashed three times, for at least ten minutes each time, at the rate of 22 gpm/ft^{2}of filter area. After each backwashing the filter media shall be allowed to compact by slowly closing the backwash valve.

B. Upon completion of backwashing, a sieve analysis shall be made of the anthracite to determine the gradation. Sufficient material shall be removed from the top of the bed so that the uniformity coefficient will be less than specified after the anthracite layer is scraped. After scraping, the effective size shall be within the specified range. The contractor will be responsible for ensuring and correcting for an unacceptable uniformity coefficient and/or effective size.

C. Additional anthracite shall be placed as required and the filters backwashed for at least three minutes at the rate of 22 gpm/ft^{2}of filter area. The media shall be allowed to compact by slowly closing the backwash valve. The anthracite thickness shall then be measured. If additional anthracite is required, the anthracite shall be placed evenly in the filters and the procedures described above repeated until the required depth and gradation of the anthracite filter material is achieved.

3.04 Disinfection

After all other work is completed, and before the filters are placed in service, the filters shall be disinfected by chlorination in accordance with AWWA C653 and section 02675 of these Specifications.

3.05 Manufacturer's Services

A. A manufacturer's representative for the equipment specified shall be present at the jobsite for installation assistance, inspection, and certification of installation and testing, and training of Owner's personnel. The Contractor shall include a minimum of 30 days at the jobsite and a minimum of eight trips.

B. The Contractor shall coordinate site visits with their installation subcontractor and the Owner. The Manufacturer shall be present at the startup for each filter.

3.06 Clean-Up

Contractor shall remove from the job site and dispose of all excess or rejected filter media and the area around the filters shall be cleaned at the end of each working day.

END OF SECTION

ITT Water & Wastewater

Leopold, Inc.
227 S. Division St.
Zelienople, PA 16063
tel 724-452-6300
fax 724-453-2122
email sales@fbleopold.com

March 25, 2010

PROPOSAL NO.: M10048 REV03

TO: Jordan, Jones and Goulding, Inc.

ATTENTION: Matt Bracewell

SUBJECT: Atlanta-Fulton County Water Resources Commission
Johns Creek, GA.

We are pleased to offer the following materials and services by ITT Water & Wastewater Leopold, Inc.

This quotation has been prepared using provided specification section 11374 and the provided RFQ issued by JJG on March 11, 2010.

PHASE #1 - Replace 24 existing filter cells installed in 1988 with new Type S® with IMS® Cap. Note – the existing wash water troughs and air header piping will be reused for the phase.

FILTER UNDERDRAIN SYSTEM:

LEOPOLD UNIVERSAL® TYPE S® UNDERDRAIN:

Under this section, we propose to furnish Leopold Universal® Type S® Underdrain of the Dual/Parallel Lateral type, manufactured from corrosion resistant, high density polyethylene for installation in twelve (12) dual bay filters (24 total filter cells). Each filter cell measures 32'-0" lateral run x 10'-0". The total filter area is 7,680 square feet.

The blocks shall be arranged end-to-end and mechanically joined with an O-ring to form continuous underdrain laterals approximately equivalent to the length of the filter cell. The joints shall be gasketed, bell and spigot type with internal alignment tabs for proper alignment, and be air and water tight. Joints shall be snap-lock type so that the blocks are joined with integral interlocking snap lugs and lug receptors for ease of assembly and installation of the laterals, and supplied with 304 stainless steel "L" anchor rods. High-impact polystyrene grout retaining strips for bridging flumes shall also be supplied.

ITT

IMS® (INTEGRAL MEDIA SUPPORT) CAP:

Under this section, we propose to furnish 7,680 square feet of IMS® (Integral Media Support) Cap. IMS® cap shall be made of plastic beads sintered together and molded to match the surface of the Leopold Universal Underdrain. The IMS® Cap shall be factory installed to plastic block prior to shipment.

MANUFACTURER'S SERVICES:

The services of a qualified Leopold technical representative to instruct the Contractor's personnel about the proper installation technique of the equipment will be provided for a period of (30) days (8 hr/day) on site plus (20) days travel time to and from the job-site in ten (10) trips. Additional services may be obtained at the current prevailing rate plus living and travel expenses.

PHASE #2 – Install IMS® cap in 24 existing filters that have Type S® Underdrain installed in 1995.

IMS® (INTEGRAL MEDIA SUPPORT) CAP & ACCESSORIES:

Under this section, we propose to furnish 7,680 square feet of IMS® (Integral Media Support) Cap along with sealant and attachment hardware for the existing Type S® Underdrain system. IMS® cap shall be made of plastic beads sintered together and molded to match the surface of the Leopold Universal Underdrain.

A qualified Leopold field service representative shall be on site to assist and instruct the procedure to install the new IMS Cap and fastening system.

MANUFACTURER'S SERVICES:

The services of a qualified Leopold technical representative to instruct the Contractor's personnel about the proper installation technique of the IMS® Cap will be provided for a period of fifteen (15) days (8 hr/day) on site plus ten (10) days travel time to and from the job-site in five (5) trips. Additional services may be obtained at the current prevailing rate plus living and travel expenses.

PRICING:

We do not include any applicable taxes.

MANUFACTURING LEADTIME:

See Table 1 of Attachment B.

BASIS of PRICING:

Any items and/or accessories not specifically called out in this quotation must be construed as being furnished by others.

This quotation is considered firm until December 1st, 2010. Orders received after Decemeber 1st, 2010 will

be reviewed by ITT Water & Wastewater Leopold, Inc. before acceptance and is subject to changes in prices or delivery depending on conditions existing at the time of entry. Quoted prices are firm for delivery within 12 months from the delivery date stipulated in the plans & specifications or mutually agreed upon by ITT Water & Wastewater Leopold, Inc. and Purchase Order issuer at time of order placement.

We do not include any applicable taxes.

Orders resulting from this quotation should be addresses to ITT Water & Wastewater, Leopold, Inc. 227 S. Division St., Zelienople, PA, 16063, USA.

We propose to furnish the material described in this document for **a total selling price of:**

Phase #1 - See Bid Form Table 2

Phase #2 - See Bid Form Table 2

All prices are F.O.B. jobsite.

For further information pertaining to the equipment contained in this proposal, please contact our area representative, who is:

Principle Environmental, Inc.
1770 The Exchange
Suite 210
Atlanta, GA 30339
Phone: 770-952-9444
Fax: 770-952-7933

Attention: Jerry Wills

Respectfully,

ITT Water & Wastewater
Leopold, Inc

Matt Schomaker
Regional Manager, Leopold

Attachment: Terms of Quotation

ATTACHMENT B

TABLE 1
Proposed Delivery Schedule
Water Filter and Appurtenances
Bulk Hypochlorite System and Filter/Plate Settler Improvements
Atlanta-Fulton County Water Resources Commission
Johns Creek, GA

Item	Description	Quote	Units
1.	Submittal of shop drawing package – all Filters	3 to 4	weeks from receipt of Purchase Order
2.	Engineer's review of shop drawing package	Three (3) weeks from submittal of shop drawing package	
3.	Delivery of Filter Bottoms for Phase I filters	6 to 8	weeks from shop drawing approval
4.	Delivery of IMS Caps for Phase II Filters	6 to 8	weeks from shop drawing approval
5.	Submittal of O&M manuals	In accordance with Specification 01730	
6.	Training of the Owner's staff	At the preference of the Owner	

TABLE 2
Cost Quotation
Water Filter and Appurtenances
Bulk Hypochlorite System and Filter/Plate Settler Improvements
Atlanta-Fulton County Water Resources Commission
Johns Creek, GA

Item	Description	Cost $
1.	Filter Bottoms for Phase I Filters 1 thru 12	$699,346
2.	IMS Caps for Phase II Filters 13 thru 21	$213,300
3.	Manufacturer Services as specified	$90,000
4.	Six (6) copies of final O&M manuals	$5,000 *
	Total bid	$1,007,646

*this number also includes submittals.

ITT

Atlanta-Fulton County Water Resources Commission
Bulk Hypochlorite System & Filter/Plate Settler Improvements
Johns Creek, GA
ITT Leopold Project: M10048

ITT WATER &WASTEWATER LEOPOLD, INC.
TERMS and CONDITIONS
REVISED PROJECT SPECIFIC: April 6, 2010

DEFINITIONS

Wherever used in these terms and conditions, the following terms have the meanings indicated which are applicable to both the singular and plural thereof:

Buyer: **TBD**

Seller: **ITT Water & Wastewater Leopold, Inc.**

Purchase Order: Buyer's initial offer to purchase equipment from Seller dated **TBD** and identified by the following reference number **TBD.**

THE FOLLOWING TERMS AND CONDITIONS are an integral part of the offer by ITT Water & Wastewater Leopold, Inc to sell the equipment described in Proposal Number **M10048** dated **TBD**.

A. CONTRACT SPECIFICATION: Seller will be bound by the technical and general portion of the documents that form a part of the prime contract only to the extent that they are applicable to the supply and delivery of the material, equipment and workmanship under the Contract.

B. TERMS OF PAYMENT: Net cash within thirty (30) days after date of invoice, subject to the approval by SELLER'S Credit Department. Interest in the amount of one and one-half percent (1-1/2%) per month will be added to all invoices not paid within thirty (30) days of the date of the invoice.

C. PRICES AND ESCALATION: Prices are based on shipment of all equipment and goods no later than 365 days after Purchase Order Date; if shipment is delayed beyond that date through no fault of SELLER, prices shall be increased at a rate of one and one-half percent (1-1/2%) per month on all equipment shipped and invoiced after that date.

D. TAXES: Sale price does not include any local, state or federal taxes, permit charges or other fees. The BUYER shall pay any taxes, charges or fees that may apply.

E. GENERAL WARRANTY (OTHER THAN MEDIA): SELLER, for the period of fifteen (15) months from date of shipment or twelve (12) months from the date of acceptance, whichever occurs first, warrants its products to be free from defects in workmanship and material under normal use and service and when used for the purpose and under conditions which ITT Water & Wastewater Leopold, Inc recommends that its products be used. NO LIABILITY IS ASSUMED BY THE SELLER UNDER ANY CIRCUMSTANCES FOR LABOR, MATERIAL OR OTHER COSTS ASSOCIATED WITH THE REMOVAL, REPLACEMENT OR REPAIR OF DEFECTIVE EQUIPMENT OR REINSTALLATION OF REPLACEMENT EQUIPMENT, UNLESS PREVIOUSLY APPROVED IN WRITING BY AN AUTHORIZED EMPLOYEE OF THE SELLER. BUYER must notify ITT Water & Wastewater Leopold. Inc immediately upon discovery. The SELLER shall have the right to inspect said product and BUYER shall, if requested, return the defective product to the SELLER with transportation prepaid. Freight charges in connection with the foregoing remedies are the responsibility of the BUYER.

FILTER MEDIA WARRANTY (if applicable): SELLER warrants that its filter media products will meet the standards established by the latest edition of AWWA (American Water Works Association) B100. SELLER shall be responsible for verifying that the filter media meets or exceeds the AWWA B100 Standard at the point of sale. Testing shall be by an independent laboratory, which regularly performs testing of filter media. BUYER shall notify ITT Water & Wastewater Leopold Inc. immediately upon discovery of any defective product. The SELLER shall have the right to inspect said product and BUYER shall, if requested, return the defective product to the SELLER with transportation prepaid. NO LIABILITY IS ASSUMED BY THE SELLER UNDER ANY CIRCUMSTANCES FOR LABOR, MATERIAL OR OTHER COSTS ASSOCIATED WITH THE REMOVAL OR REPLACEMENT OF MEDIA UNLESS PREVIOUSLY APPROVED IN WRITING BY AN AUTHORIZED EMPLOYEE OF THE SELLER.

THE ABOVE WARRANTIES ARE IN LIEU OF ALL OTHER WARRANTIES EXPRESSED OR IMPLIED, INCLUDING MERCHANTABILITY AND FITNESS FOR A PARTICULAR PURPOSE.

ITT

F. LIMITATION OF LIABILITY. ITT Water & Wastewater Leopold, Inc. shall not be liable for indirect, special, incidental or consequential damages or penalties and does not assume any liability of BUYER or others, or to others, for injuries to persons or property resulting from the alleged failure of ITT Water & Wastewater Leopold, Inc products.

G. DELIVERY: SELLER will use reasonable diligence to comply with BUYER'S requested shipping and delivery dates and to obtain similar commitments from the SELLER'S subcontractors and suppliers. SELLER shall not be liable for any loss, damage, expense, or charge of any kind resulting from delays in shipment, delivery, or installation. Without limitation to the foregoing, under no circumstances shall SELLER be liable for any failure or delay in shipment, delivery, or installation resulting from any cause beyond SELLER'S control, including, but not limited to, provisions of law or governmental regulations; accident, explosion, fire, windstorm, flood or other casualty; strike, lockout, or other labor difficulty; riot, war, insurrection, shortage or inability to secure labor, or other services, raw materials, production or transportation facilities, or for delays or failures by third parties to provide supplies, components, services, parts, or equipment required by SELLER to complete the contract. All shipping dates provided at any time by the SELLER are approximate and SELLER shall not be liable in any way for failure to ship in accordance with any shipping dates furnished by SELLER.

H. FREIGHT: Equipment and goods are quoted "FOB Jobsite, full freight allowed to first destination". SELLER shall be responsible for filing claims with the carrier for loss or damage of equipment and goods in transit. SELLER reserves the right to select the method of shipment, routing and carrier for all equipment and goods sold freight allowed. Additional transportation cost due to requested routing, method of shipment or other instructions will be added to the price and paid by BUYER.

I. PENALTIES: ITT Water & Wastewater Leopold Inc. will not accept liquidated damage provisions or penalty provisions.

J. TITLE: Title to the equipment and goods described herein shall pass at the time the goods arrive at the jobsite and in the possession of the BUYER.

K. MATERIALS NOT INCLUDED: This Purchase Order includes only those materials and supplies specifically mentioned in ITT Water & Wastewater Leopold, Inc Proposal and it shall not be construed to include wire, conduit, grout, adhesives, mortar or other construction materials which may be necessary to install ITT Water & Wastewater Leopold, Inc. equipment.

L. CANCELLATION: Upon cancellation by BUYER of its contract to purchase the equipment, goods and services described in this Proposal, SELLER shall be entitled to recover all direct and indirect costs incurred.

M. ATTORNEY'S FEE: SELLER shall be entitled to recover from BUYER all attorney's fees incurred by SELLER as a result of any breach by BUYER of its contract to purchase the equipment, goods and services described in this Order.

N. OFFER AND ACCEPTANCE. Upon the subsequent execution of the "Acceptance" below, by an authorized employee of the SELLER at Zelienople, Pennsylvania, this Order will become the entire agreement between the BUYER and the SELLER, and no previous communications or negotiations, whether oral or written, shall be of any effect. THERE ARE NO COVENANTS OR AGREEMENTS, INDUCEMENTS, GUARANTEES, WARRANTIES, ADDITIONS OR CONSIDERATIONS OTHER THAN AS SET FORTH SPECIFICALLY HEREIN. The parties intend to be legally bound hereby upon the execution of this instrument as a contract. The laws of the Commonwealth of Pennsylvania shall govern this transaction.

AGREEMENT TO PURCHASE: BUYER agrees to purchase the equipment and services herein in accordance with the terms and conditions set forth above.

_____
(BUYER)

BY: _____

_____

_____

_____, 20 _____

ACCEPTANCE: SELLER hereby accepts BUYER'S offer to purchase.

ITT WATER & WASTEWATER LEOPOLD, INC.

BY: _____

_____

_____

_____, 2010

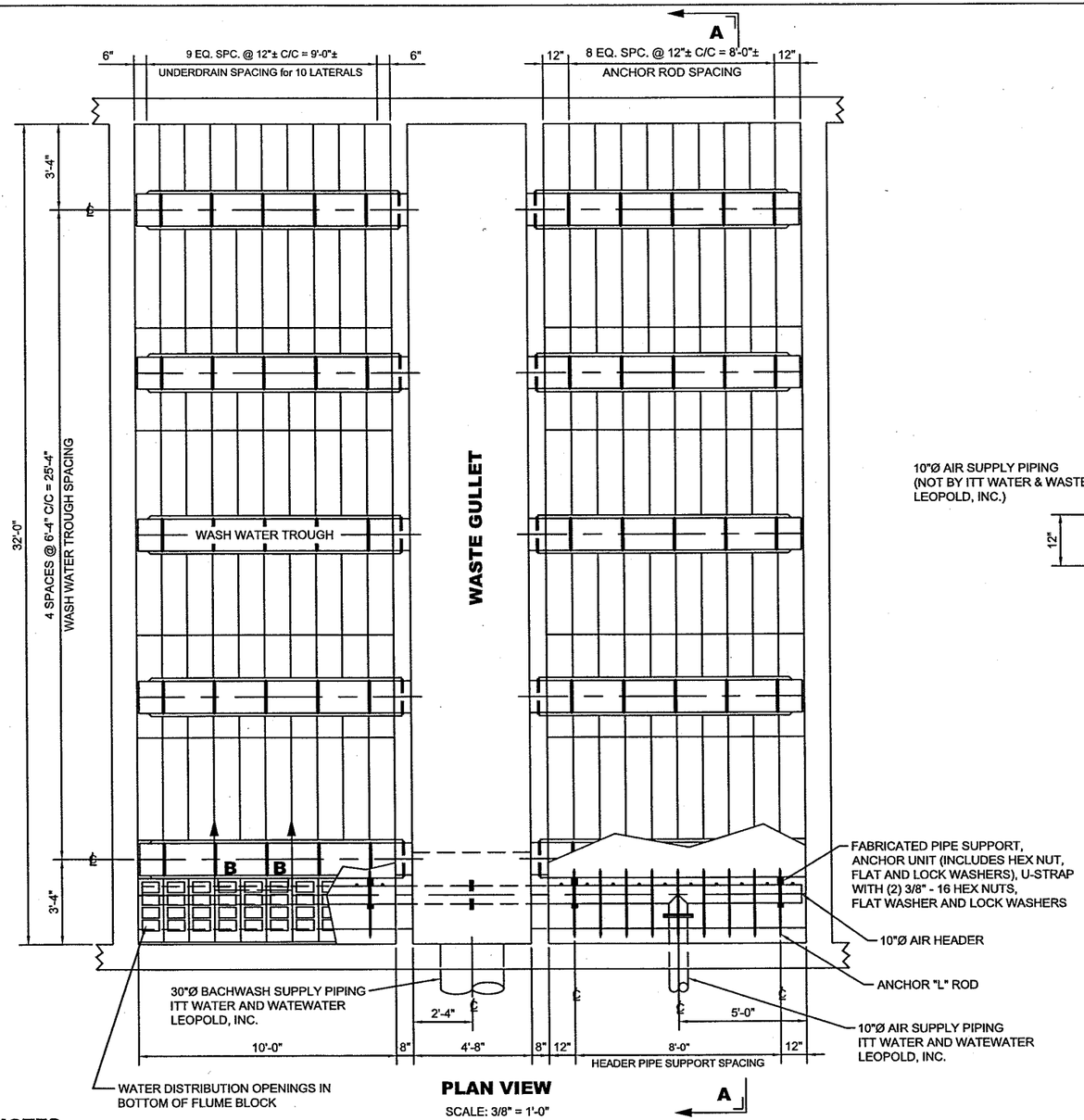

PLAN VIEW

SCALE: 3/8" = 1'-0"
12 - ARRANGEMENTS REQ'D
6 - AS SHOWN & 6 - OPP. HAND

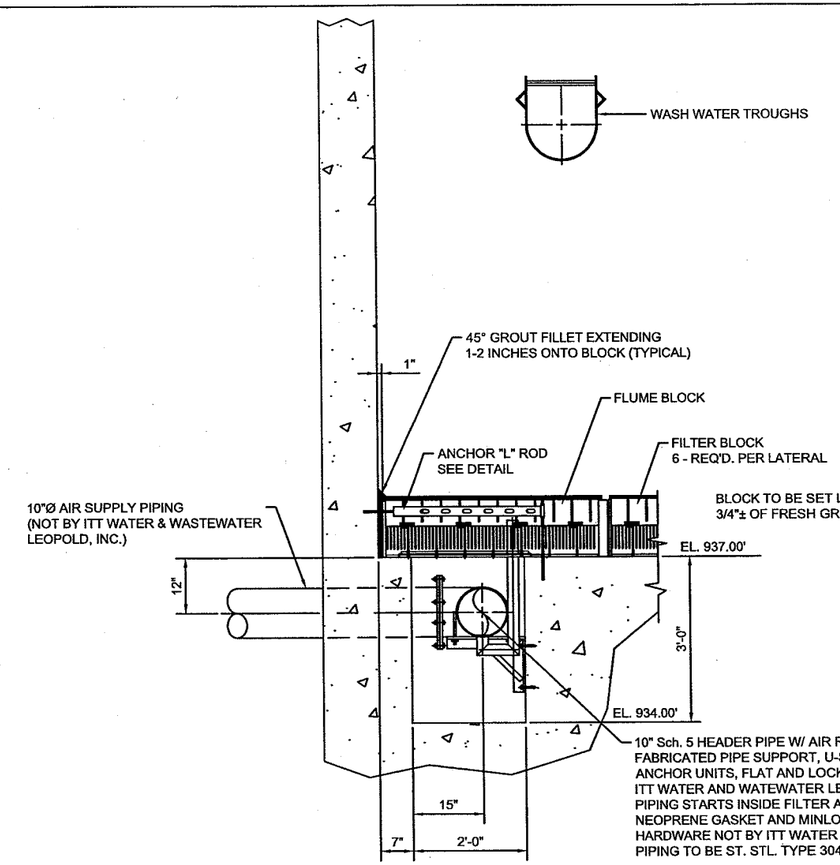

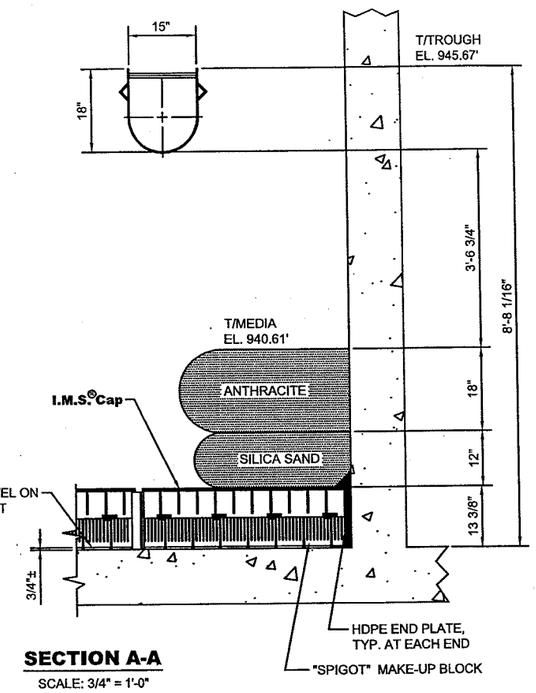

SECTION A-A

SCALE: 3/4" = 1'-0"

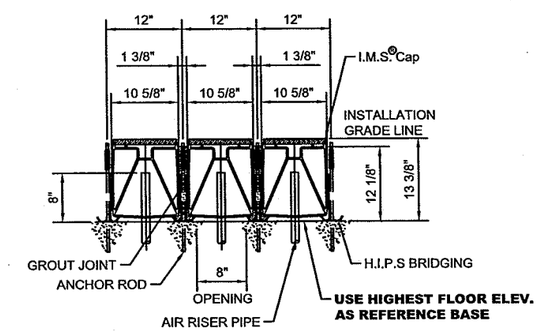

SECTION B-B

SCALE: 3/4" = 1'-0"

ANCHOR "L" ROD, (CARBON STEEL) DRILL HOLES 5" MIN. DEEP IN FLOOR AND 3"±1/2" DEEP IN WALL. FILL HOLES WITH A SUITABLE EPOXY SYSTEM, INSERT RODS INTO EPOXY WITH A TWISTING MOTION, ADJUST TOP OF CROSSBAR TO 11"±1/2" ABOVE HIGHEST POINT OF FLOOR, LOCK INTO POSITION WITH TOP AND BOTTOM NUTS. EPOXY SYSTEM: "HILTI HIT RE500" OR "EPCON C6". HOLE DIAMETER AS SPECIFIED BY EPOXY MANUFACTURER. EPOXY SYSTEM NOT BY ITT WATER & WASTEWATER LEOPOLD, INC.

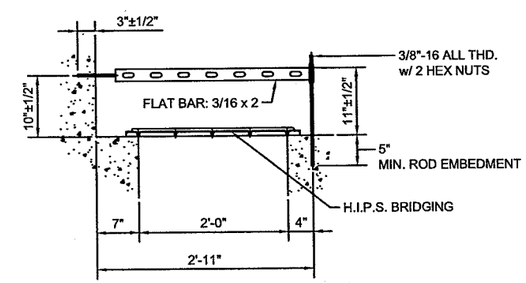

ANCHOR ROD DETAIL

SCALE: 1" = 1'-0"

NOTES:

1. SEE DATA SHEET TSU-PE-2 FOR ADDITIONAL MATERIAL AND INSTALLATION NOTES.
2. FILTER DESIGN IS BASED ON THE FOLLOWING:

   HIGH RATE BACKWASH: 22 GPM/SQ.FT.
   AIR SCOUR RATE: 4.4 SCFM/SQ.FT.
   CONCURRENT AIR/WATER RATES: 4.4SCFM/ 5 GPM PER SQ.FT.
   AIR PRESSURE REQUIRED AT INLET FLANGE: 1.5 PSI.

   AIR PRESSURE REQUIRED INCLUDES FILTER COMPONENTS, I.E. AIR HEADER IN FILTER, UNDERDRAIN, AND STATIC HEAD OF WATER.

5. ANCHOR RODS AND ANCHOR ROD EPOXY MUST BE INSTALLED IN ACCORDANCE WITH THE INSTALLATION INSTRUCTIONS AND TOLERANCES SHOWN ON ALL DRAWINGS, THE O & M MANUAL, AND THE EPOXY MANUFACTURER'S INSTRUCTIONS. ENSURE PROPER ANCHOR ROD LOCATIONS, HOLE SIZES, HEIGHTS, EMBEDMENT DEPTHS, AND EPOXY PENETRATION.
4. ALL FILTER FLOORS, NEW OR EXISTING, MUST HAVE A ROUGH SURFACE EQUIVALENT TO A MINIMUM 1/8 INCH GROOVE BROOM FINISH PRIOR TO PLACING THE BASE GROUT.
5. ANCHOR RODS AND ANCHOR ROD EPOXY MUST BE INSTALLED IN ACCORDANCE WITH THE INSTALLATION INSTRUCTIONS AND TOLERANCES SHOWN ON ALL DRAWINGS, THE O & M MANUAL, AND THE EPOXY MANUFACTURER'S INSTRUCTIONS. ENSURE PROPER ANCHOR ROD LOCATIONS, HOLE SIZES, HEIGHTS, EMBEDMENT DEPTHS, AND EPOXY PENETRATION.
6. BLOWER SYSTEMS WITH PD TYPE BLOWERS MUST INCLUDE AN AUTOMATIC VENT TO ATMOSPHERE VALVE TO CONTROL AIR INTRODUCTION INTO THE FILTER.
7. THE FILTER MUST NOT INCLUDE EXPANSION JOINTS WITHIN THE FILTER BOX.
8. THERE MUST BE A HIGH LOOP IN THE AIR SCOUR PIPING BETWEEN THE FILTER AND THE BLOWER. THE LOOP SHALL BE A MINIMUM OF 7 FEET ABOVE THE WEIR ELEVATION OR ABOVE THE FILTER OVERFLOW ELEVATION.
9. DIMENSIONS AND OTHER INFORMATION PRESENTED ON THE ITT WATER & WASTEWATER LEOPOLD, INC. PROJECT DRAWINGS REPRESENT ITT WATER & WASTEWATER LEOPOLD, INC.'S BEST INTERPRETATION OF THE PROJECT PLANS AND SPECIFICATIONS AS PREPARED BY OTHERS. AS SUCH, DURING THE APPROVAL PROCESS, THE PURCHASER SHALL THOROUGHLY REVIEW AND VERIFY ALL DIMENSIONS WITH RESPECT TO ACTUAL FIELD CONDITIONS.

I.M.S.® Cap
FIBERGLASS PRODUCTS
STAINLESS STEEL PRODUCTS

NSF Certified to ANSI/NSF 61

UNDERDRAIN BLOCK
MEDIA: GRAVEL, SAND, GARNET, CARBON, ANTHRACITE

PHASE #1

REVISION	
1	
2	
3	
4	
5	

THIS DRAWING IS SENT TO YOU SUBJECT TO RETURN UPON DEMAND, AND WITH THE UNDERSTANDING THAT IT IS NOT TO BE REPRODUCED, COPIED OR USED DIRECTLY OR INDIRECTLY, IN ANY WAY DETRIMENTAL TO OUR INTERESTS. ALL PATENT RIGHTS RESERVED. © 2007 F. S. Leopold Company

UNIVERSAL® TYPE S® W/I.M.S.® UNDERDRAIN FRONTFLUME FILTER ARRANGEMENT
FULTON COUNTY, GA M7-3465

ITT
Water & Wastewater U.S.A., Inc.
Leopold

DRAWN BY	CHECKED BY	DATE	SCALE	DRAWING NUMBER	REVISION
BLS	--	04/23/09	AS NOTED	3465.90.01	0

Part 1 General

1.01 Scope (SHCLR-TK-1,2,3,4; SHCLR-DTK-1,2)

A. The storage tanks shall be low-pressure constructed of fiberglass reinforced plastic.

B. The tanks shall be suitable for all naturally occurring ground conditions to store products which are compatible with the resin system used in the corrosion barrier.

C. Manufacturer shall submit a copy of their current ASME RTP-1 Certificate of Authorization.

1.02 Submittals

Complete shop drawings and engineering data shall be submitted to the Engineer in accordance with the requirements of Section 01340 of these Specifications.

1.03 Physical Properties

A. The wall thickness of all tanks shall be determined by the temperature, specific gravity, size and capacity required in Table 1. The minimum wall or head thickness shall be 0.220-inch.

B. The surface shall have a Barcol hardness of at least 90 percent of the resin manufacturer's minimum specified hardness for the cured resin in accordance with ASTM D 2583.

C. Portions of the tanks, such as joints and fittings, may be fabricated by contact or hand lay-up molding.

D. The finished laminate shall be as free as commercially practicable from visual defects such as foreign inclusions, dry spots, air bubbles, pinholes and pimples. Tanks shall meet ASME RTP-1 Visual Acceptance Criteria for Level 1 for inner surface, interior layer, and corrosion barrier and Level 2 for the structural layer.

1.04 Fiberglass Tanks Schedule

Each tank shall be sized and designed to hold a capacity medium shown in Table 1 of this Section.

1.05 Storage and Protection

Tanks and accessories shall be stored and protected in accordance with the manufacturer’s recommendations and Section 01611 of these Specifications.

1.06 Quality Assurance

A. The manufacturer shall assume unit responsibility for all items specified in this Section. Unit responsibility shall require that all items be products of, or warranted by, the tank manufacturer.

B. The manufacturer shall provide a written certification to the Engineer, with the shop drawings, that all equipment furnished complies with all applicable requirements of these Specifications.

C. The tanks shall be designed and manufactured in accordance with ASME RTP-1 by a manufacturer with a current certificate issued by ASME. The tanks shall bear the ASME RTP-1 Stamp and the manufacturer's National Board Number.

Part 2 Products

2.01 Acceptable Manufacturers

The storage tanks shall be Belco, Tankinetics, Plas-Tanks Industries or Diamond Fiberglass.

2.02 Resin

The vinylester resin shall be either Derakane 411 or Hetron 922. The same resin shall be used throughout the tank construction. Resin shall be as recommended by the tank manufacturer for the intended service from corrosion test data or from the manufacturer's experience with related environments.

2.03 Reinforcing and Surface Material

Material shall be commercial grade of fiberglass, as specified in the fabrication section, having a coupling agent which will provide a suitable bond between the fiberglass reinforcement and the resin.

2.04 Fittings and Accessories

A. Fittings and accessories shall be provided as shown in Table 1 of this Section.

B. All FRP nozzles smaller than 8-inches in diameter shall be conically gusseted. Where required for specific environments, FRP nozzles will be used in the wall of the tank. All other fittings and/or accessories shall be per manufacturer's product specification.

C. For flanged fittings, the flange face shall be perpendicular to the axis of the pipe within 1/2 degree and shall be flat to plus or minus 1/16-inch. Flange face drilling shall correspond to ANSI (ASA) standard B16.5 for 150 pound steel flanges in 1 through 24-inch sizes.

D. Standard orientation will have bolt holes straddling the principal centerline of the vessel.

E. Standard flanged nozzles are designed for use with full face gaskets. These should be 1/8-inch thick with a 40 to 50 durometer, and be compatible with the tank contents as shown in Table 1.

F. All tanks must be positively vented to the atmosphere with the minimum vent size equal to or greater than the largest inlet or outlet nozzle. All tanks shall be designed and warranted to be suitable for filling by air.

G. Gasket material for manways shall be Viton.

H. Provide FRP holddown lugs for each tank shown. The number and location of the lugs shall be as specified by the tank manufacturer. The lugs shall be capable of withstanding the buoyancy load for the tank diameter shown with water to the top of the containment basin wall.

I. Provide fiberglass angle brackets as part of the tank in line with level transmitters from top to bottom of tank for mounting of electrical conduit or piping.

2.05 Fabrication

A. Tank wall shall be fabricated by chopped strand spray-up utilizing a programmed carriage dispenser to apply glass and resin to a mechanically controlled, rotating mandrel, or by filament winding, utilizing wrapping multiple continuous strands of fiberglass onto a rotating mandrel or drum.

B. Resin and glass should be measured to ascertain proper rate and volume of materials applied. The wall laminate will be constructed as follows:

1. The first layer shall be vinyl ester resin reinforced with chemically resistant "C" glass surfacing mat, or organic surfacing veil. This resin-rich layer to be a minimum of 20 mils thick. The interior tank surface coating shall be chemically compatible with the tank contents as indicated in Table 1.

2. The second layer shall be vinyl ester resin sprayed upon random oriented chopped strand "E" glass fiber reinforcement to be 20 to 30 percent by weight. This resin rich layer to be a minimum of 80 mils thick.

3. The third layer shall be vinyl ester resin applied by filament winding in accordance with ASTM D 3299 or sprayed upon randomly oriented chopped strand "E" glass fiber reinforcement. Thickness to vary with tank size, design temperature. The surface of this shall be resin rich.

2.06 Manufacturing Quality Control

A. Process and quality control shall be constantly monitored and manufacturer must maintain manufacturing and quality control records for each tank.

B. The first layer surface shall be clean, smooth and uninterrupted with no cracks, or crazes.

C. No foreign matter large enough to reach the surface of the first layer is permitted.

D. The exterior surface of the tank shall exhibit good workmanship; smooth and uniform with no exposed fibers, sharp projections or uncoated sanded areas. The exterior surface shall be properly cured.

2.07 Special Fabrication Requirements

A. All tanks shall have the following special provisions:

1. The catalyst system for the entire tank shall be benzoyl peroxide and dimethylaniline (BPO/DMA) in amounts selected by the manufacturer for the particular resin system. Tanks utilizing a different catalyst system for the structural portions of the tank are not acceptable. The ratio of benzoyl peroxide to dimethylaniline shall be within recommended ratios as deemed appropriate by the manufacturer.

2. Double synthetic veils shall be provided on the interior of the tank.

3. A post cure using elevated temperatures shall be provided. Cure time and temperature shall be adjusted to provide the maximum protection for the intended chemical service.

4. The minimum recommended Barcol hardness for the intended chemical service shall be provided to the Engineer. The actual hardness achieved during the post cure shall be documented and shall meet the minimum recommended by the manufacturer.

B. Horizontal tanks shall have the following special provisions:

1. Horizontal tanks shall be supported with FRP saddles bonded to the vessel.

2. Saddle spacing shall not exceed 20 feet.

3. Saddles shall extend circumferentially a minimum of 120 degrees on the tank wall.

4. Hold down lugs shall be attached to the saddle in accordance with tank design requirements.

5. End caps shall be ASME F&D heads.

2.08 Signage

A. Each tank shall be provided with two signs to identify the name of the chemical stored. Signs shall be attached to the tank at locations that are clearly visible or as directed by the Engineer.

B. Each tank shall be provided with precautionary and hazardous material signage as recommended by the Manufacturing Chemists Association and NFPA 704. Signs shall be attached to the tank at locations that are clearly visible or as directed by the Engineer.

C. Certification Label: The tank shall be provided with a permanently attached label providing the following information:

1. Type of material stored
2. Concentration of material stored
3. Specific gravity
4. Design temperature
5. Type of liner resin and reinforcement
6. Type of surface veil
7. Tank capacity
8. Manufacturer
9. Date of manufacture

Part 3 Execution

3.01 Installation

A. Site soil must have sufficient load bearing characteristics and adequate drainage.

B. Installation shall be in strict accordance with the respective manufacturer's instructions and recommendations in the locations shown on the Drawings.

3.02 Electrical Work

The Contractor shall furnish and install all electrical work and equipment required for a complete and operable installation as shown on the Electrical Drawings and as specified in Division 16 of these Specifications.

3.03 Inspection and Testing

A. All factory tests and inspections shall be conducted as specified and approved by the Engineer prior to delivery of the equipment to the site.

B. The equipment manufacturer shall provide the Contractor with the services of a factory representative as required during the installation phase of the equipment to ensure the Contractor is knowledgeable of proper installation procedures.

C. Upon completion of installation, the Contractor shall furnish a written certification by the equipment manufacturer that the equipment is installed in accordance with their recommendations and is ready for start-up.

3.04 Cleaning

Prior to acceptance of the work of this Section, thoroughly clean all installed materials, equipment and related areas in accordance with Section 01710 of these Specifications.

TABLE 1

FIBERGLASS TANK SCHEDULE

Equipment Tag No.	SHCLR-TK-1,2,3,4	SHCLR-DTK-1,2
Equipment Description	Bulk Storage Tanks	Day Storage Tank
Exposure	Climate-controlled Interior	Climate-controlled Interior
Chemical Service	12.5% Sodium Hypochlorite	12.5% Sodium Hypochlorite
Design Pressure	0.5 PSIG	0.5 PSIG
Max Solution Concentration	12.5 %	12.5 %
Specific Gravity	1.2	1.2
Max Temperature of Contents	90 F	90 F
Quantity	Five (5)	Two (2)
Type	Vertical, Cylindrical	Horizontal, Cylindrical
Bottom Configuration	Flat	Dome
Top Configuration	Flat with handrail	Dome
Nominal Capacity	20,400 gallons	3,500 gallons
Nominal Diameter	12’	6’
Overall Length	24’	17’
Connection Openings:		
1) Fill Line	3"	3"
2) Suction Line	3"	2"
3) Drain Line	4"	3"
4) Overflow Line	4"	3"
5) Vent	8"	6”
6) Manway Diameter (Top)	2'-0"	2'-0"
7) Manway Diameter (Side)	2'-0"	NA
8) Ultrasonic Level Instrument	8”	2”
Materials of Construction for Metal Parts	Titanium	Titanium
Accessories	Two-foot fiberglass ladder for connection to ceiling-mounted platform; level indication on side wall	Full-height fiberglass ladder

END OF SECTION

Attachment A-- USER'S BASIC REQUIREMENTS SPECIFICATION (UBRS)
As Required by the Provisions of ASME RTP-1

RTP Edition No. 2005

UBRS Revision No. DRAFT 1

User Firm Name: Atlanta-Fulton County Water Resources Commission

User's Agent Firm Name: JJG

Title of Equipment: Bulk Chemical Storage Tanks

User's Designation No.: SHCLR-TK-1,2,3,4; SHCLR-DTK-1,2 (Sodium Hypochlorite)

Installation Location (Name and Address): Atlanta-Fulton County Water Treatment Plant

9750 Spruill Road

Johns Creek, Georgia 30022

UBRS Prepared by (User or User's Agent):

Name Richard Lawrence Phone No. 678-333-0248 Date: 12-29-2009

Address: Jordan, Jones & Goulding

6801 Governor's Lake Parkway

Norcross, GA 30071

1. Equipment Description (equipment sketch and nozzle schedule must be attached):

   Tank specification and drawings attached.

2. Additional Fabricator Responsibilities:

   ☐ Special Requirements:

   ☐ Acoustic Emission Testing

   ☐ Inspection or Testing Requirements not Listed in the Standards _____

   ☐ _____

   ☐ _____

☐ Visual Inspection Acceptance Level (refer to Table 6-1 of ASME RTP-1):

☐ Level 1 (inner surface, interior layer, and corrosion barrier)

☒ Level 2 (structural layer)

Quantity Limitations for Gaseous Air Bubbles or Blisters: _____

_____

☐ Additional Inspection Aids/Methods (refer to Para. 6-940(c) of ASME RTP-1):

_____

_____

_____

3. Material Selection:

3.1 Material Selection by:

☐ Resin Manufacturer (include data per Section 4 of this Document)

☒ Fabricator (include data per Section 4 of this Document)

☐ End User. Applicable User's Specifications/Standards, Codes, Ordinances, FDA Requirements, etc. (list and specify; attach copies of local code/ordinance requirements): _____

☐ Other _____

3.2 Material of Construction:

Resin: Vinylester (Derakane 411 or Hetron 922) Catalyst/Cure System: BPO/DMA

Veil: Type C (chemical) glass, 20 mils Barcol Hardness Per Para. 6-910(b)(4): 90%

☒ Lift Lugs: ☒ RTP ☐ Carbon Steel ☐ Other: _____

☒ Hold Down Lugs: ☒ RTP ☐ Carbon Steel ☐ Other: _____

4. Chemical Service Data (must be provided when Fabricator or resin manufacturer is making material selection):

4.1 Description of Process Function and Process Sequence: Bulk Storage of Sodium Hypochlorite

_____

_____

_____

_____

4.2 Contents:

Chemical Name	Concentration Max. %	Concentration Min. %	Exposure Time
Sodium Hypochlorite	12.5	9	> 30 days

4.3 pH Range: 13 Max. 11 Min.

5. Design:

5.1 Design Conditions:

	Sodium Hypochlorite
Internal Pressure	0.5 psig
External Pressure	Atmospheric
Temperature	-5^{0}F to 105^{0}F
Specific Gravity	1.17
Liquid Level	1.5' below top of tank

Elevation Above grade Exposure Inside under cover (SHCLR-TK-1,2,3,4; SHCLR-DTK-1,2)

Wind/Seismic Code/Year 2006 International Building Code with 2009 Georgia Amendments; IBC Importance Factor of 1.25

Snow Load NA Seismic Site Class D

Site-Specific Seismic Information (soil type, ground motion coefficients, etc.)
Short period acceleration, Sds=0.267g
One second period acceleration, Sd1=0.144g

☐ Other _____

Capacities: Operating 20,000 (SHCLR-TK-1,2,3,4); 3,500 (SHCLR-DTK-1,2) gal

Flooded By Fabricator gal

5.2 Agitation: None

Dead Load _____ lb

Bending Moment _____ ft-lb

Torque _____ ft-lb

Horsepower _____ hp

Impeller Speed _____ rpm

Impeller Diameter _____ in

Number of Impellers _____

Foot Bearing: ☐ Yes ☐ No

5.3 Heating and Cooling:

☐ Electric Panels (T-1601)

☐ Steam Coil

☐ Steam Sparger

☐ Heat Exchanger

☐ Other _____

5.4 Mechanical and Other Forces:

☐ Violent Chemical Reaction

☐ Subsurface Introduction of Gas and Vapor

☐ Subsurface Introduction of Steam

☐ Transmitted Mechanical Load/Force

☐ Impact Due to Introduction of Solids

☐ Vacuum from Pump Down (or Vessel Draining)

☐ Vacuum from Cool Down

☐ Other_____

5.5 Corrosion Barrier Excluded from Structural Calculations:

☒ Yes

☐ No

5.6 Declaration of Critical Service (only by User or User's Agent; refer to Para. 1-210 of ASME RTP-1):

☐ Yes

☒ No

6. Designation of Inspection (Reviewer Paras. 1-400, 1-430, and 1-440 of ASME RTP-1.) It must be recognized that ASME RTP-1 establishes numerous duties for the Inspector, which necessitates that the Inspector be present in the fabrication shop throughout a major portion of the fabrication interval. Inspector shall be:

☒ Fabricator's Quality Control Principal

☐ User's Representative

☐ Other

Inspector's Name: _____ Telephone: _____

Company: _____

Address: _____

_____

6.1 Approval of Inspector Designation:

6.1.1 Authorized User's Representative:

Name _____ Title _____

Signature _____ Date _____

6.1.2 Authorized Fabricator's Representative:

Name _____ Title _____

Signature _____ Date _____

Additional Requirements: _____

_____

_____

_____

_____

_____

_____

_____

_____

GENERAL NOTE: This form may be reproduced and used without written permission from ASME if used for purposes other than republication.

END OF SECTION

Part 1 General

1.01 Scope

A. Work described in this Section includes furnishing all labor, materials, equipment, tools and incidentals required to remove and replace anthracite-sand media in the 24 existing Phase 1 and 2 filters. Each filter unit shall be tested and placed into operation in accordance with these Specifications and the manufacturer's recommendations. Underdrain and media support system are as described in Section 11374 of these Specifications.

B. The Contractor shall provide a letter to the Owner with both the filter bottom and media manufacturer representatives signatures stating that the completed system meets each's installation requirements and that the installation is approved.

1.02 Design Requirements

A. Design requirements for the new and existing filter underdrains and appurtenances are provided in Section 11374 of these Specifications.

B. The media system shall be capable of sustained operation at rates of 6 GPM per square foot, filtering treated settled water without excessive use of backwash water or undue rate of head loss build-up.

C. Testing

1. The manufacturer shall arrange and pay for an independent testing laboratory to sample each shipment of media in conformance with AWWA B100. The filter material shall be tested at the place of manufacture by the media manufacturer in accordance with the requirements of these Specifications. The Owner reserves the right to witness the sampling and testing procedures.

2. Prior to installation, the Owner reserves the right to test the filter material and reject the installation if the material fails the tests. Any media shipment that fails the applicable requirements of this Specification shall be removed from the site and replaced with compliant materials.

3. Tests and test standards shall include the following:

a. Specific Gravity (Apparent): ASTM C 128.

b. Sieve Analysis: ASTM C 136 and Section 5.3 in AWWA B100. All sieves shall be calibrated according to the procedures in ASTM E 11, and shall be of the U.S. Series.

c. Hardness: Section 5.3 in AWWA B100.

d. Acid Solubility: Section 5.3 in AWWA B100.

1.03 Quality Assurance

Filter media shall be furnished, placed, prepared for service, and tested in accordance with the requirements of AWWA B100.

1.04 Submittals

A. Submit product data in accordance with Section 01340 of these Specifications.

B. Submit results of the tests required by this Specification to the Engineer for approval prior to shipment.

Part 2 Products

2.01 Acceptable Manufacturers

Filter media shall be furnished by Unifilt Corporation, F.B. Leopold Company, CEI or Anthrafilter Media Ltd.

2.02 Filter Media

A. Filter sand shall be composed of hard, durable, clean silicious particles, free of all mica with an average specific gravity of at least 2.60 and shall be in accordance with AWWA B100. Sand media shall have an effective size of 0.45 to 0.55 mm, and a uniformity coefficient of not more than 1.4. The total finished depth of sand, above the IMS Cap supplied by the filter underdrain manufacturer, shall be 12-inches after backwash and skimming.

B. Filter media shall be shipped and delivered in superbags. Filter media shall be palletized. The supplier shall provide recommended procedure for the protection of the materials prior to installation. Media contamination of any sort before or after placement shall be replaced with clean media.

C. Filter anthracite shall be composed of specially selected and graded, hard, durable anthracite coal particles. The specific gravity shall be 1.55 or more with hardness (MOH scale) of 3.0 or more, and shall be essentially free of iron, sulfides, clay, shale, extraneous dirt, and excessive dust, and shall be in accordance with AWWA Standard B100. Anthracite media shall have an effective size of 0.85 to 0.95 mm with a uniformity coefficient of 1.4 or less. The total finished depth of anthracite shall be 18-inches after backwash and skimming.

Part 3 Execution

3.01 Construction Sequence

The construction sequence shall be in accordance with Section 01011 of these Specifications. Delivery of the filter media shall be in phases and shall be coordinated with the Contractor's schedule.

3.02 Media Installer Qualifications

A. The media installer shall meet the following qualifications:

1. Approved by the media manufacturer/supplier.

2. Completed a minimum of 5 filter installations within the last 10 years.

3.03 Filter Media Placement

A. Preparation: Each filter cell shall be cleaned thoroughly before any filter materials are placed. Each cell shall be kept clean throughout placement operations. Before any material is placed, the top elevation of each layer shall be marked by a level line on the inside of the filter. Filter media shall be installed in accordance with AWWA Standards. During each backwash, the water shall be applied at an initial rate of no more than 2 gallons per minute per square foot (gpm/ft2) of filter area. The backwash rate shall then be increased gradually over a period of three minutes to the rate set by the media supplier.

B. Sand

1. A minimum of 12-1/2-inches of sand shall be deposited in the filters in a uniform thickness and carefully leveled to the required grade.

2. After all filter sand is placed and before any coal is deposited, the sand shall be backwashed three times, for at least three minutes each time, at the rate of 15 gpm/square feet of filter area. After each backwashing the sand shall be allowed to compact by slowly closing the backwash valve.

3. After washing, the sand shall be scraped to remove a minimum of 1/2-inch to remove excess fine materials before the coal is installed.

4. The final depth of sand shall be 12-inches.

C. Anthracite

1. Anthracite shall be deposited in the filters in a uniform thickness and carefully leveled to the required grade.

2. After all anthracite is placed each bed shall be flooded with water for at least 24 hours. Under the supervision of the Engineer, the anthracite shall be backwashed for a minimum of ten minutes, or until the fine materials are removed, at the rate of 22 gpm/ft^2 of filter area.

3. After washing, the anthracite shall be scraped as deemed necessary to remove excess fine materials.

4. The final depth of the anthracite after washing shall be 18 inches.

3.04 Preparation of Filters for Service

A. After all filter materials have been placed and initially backwashed, each filter shall be backwashed three times, for at least ten minutes each time, at the rate of 22 gpm/ft^2 of filter area. After each backwashing the filter media shall be allowed to compact by slowly closing the backwash valve.

B. Upon completion of backwashing, a sieve analysis shall be made of the anthracite to determine the gradation. Sufficient material shall be removed from the top of the bed so that the uniformity coefficient will be less than specified after the anthracite layer is scraped. After scraping, the effective size shall be within the specified range.

C. Additional anthracite shall be placed as required and the filters backwashed for at least three minutes at the rate of 22 gpm/ft^2 of filter area. The media shall be allowed to compact by slowly closing the backwash valve. The anthracite thickness shall then be measured. If additional anthracite is required, the anthracite shall be placed evenly in the filters and the procedures described above repeated until the required depth and gradation of the anthracite filter material is achieved.

3.05 Disinfection

After all other work is completed, and before the filters are placed in service, the filters shall be disinfected by chlorination in accordance with AWWA C653.

3.06 Manufacturer's Services

A. The Contractor shall not install any media without the manufacturer's representative being on-site to instruct and observe the initial installation of media for the first filter. The Contractor shall have the manufacturer's representative provide the Owner with a letter certifying that the representative was present on-site, did instruct, did observe and approved the Contractor's installation techniques and authorized continuances of placement of the media. Any media installed prior to the manufacturer's representative being on-site and authorizing the Contractor to continue, shall be removed and replaced by the Contractor with no additional cost to the Owner.

3.07 Clean-Up

Contractor shall remove from the job site and dispose of all excess or rejected filter media and the area around the filters shall be cleaned at the end of each working day.

END OF SECTION

Part 1 General

1.01 Scope

A. The work described in this Section and/or indicated on the Drawings shall include, except where otherwise noted, the furnishing of all materials, equipment, appurtenances, accessories, connections, labor, etc., required and/or necessary to completely install, clean, inspect, adjust, test, balance and leave in safe and proper operating condition all mechanical systems. All mechanical work shall be accomplished by workers skilled in the various trades involved.

B. Prior to the ordering or purchase of any equipment or materials or the layout or installation of any work, visit and examine the site and shall examine and understand the work shown on the Drawings and described in these Specifications. If any work involves existing equipment, ductwork, piping, buildings, etc., first verify model numbers, electrical characteristics, sizes, dimensions, etc., to be compatible with the work shown on the Drawings.

C. Throughout the course of the Project, schedule and coordinate work with the Owner and other trades to optimize space utilization and avoid conflict or interference with the work of other trades, structural elements, doors, windows, lights, conduit and other equipment or systems.

D. Unless otherwise shown on the Electrical Drawings, the mechanical work shall include:

1. The furnishing and installation of all motors in accordance with Section 16150, motor starters, relays and other controls and control wiring necessary for the proper operation of all mechanical equipment. Power wiring to mechanical equipment and a 120 volt source for control power shall be provided as a part of the electrical work.

2. All controls and control wiring shall be provided under this Division and installed according to Division 16 of these Specifications. Where control power is not available in the vicinity of mechanical equipment, a transformer shall be furnished and installed to convert power voltage to control voltage. The transformer may be an integral part of the starter.

3. Magnetic starters or combination starters as shown on the Drawings or specified herein, complete with running indication lights in an approved enclosure, shall be furnished and installed for mechanical equipment automatically started and stopped, or otherwise controlled by thermostats, timers, or other devices. Starters for all manually controlled equipment shall include running indication lights in an approved enclosure. Switches for starters shall be as shown on the Drawings or specified herein. All starters shall comply with the requirements of Section 16050.

4. Starters shall be of the reduced voltage part winding type for all equipment with motors 50 HP and larger as shown on the Drawings or specified herein.

5. Disconnect switches shall be provided for mechanical equipment in accordance with the National Electrical Code. Coordinate type (fused or not), fuse ratings, enclosure type and installation with equipment nameplate, NEC, NEMA and Sections 16050 and 16440 requirements.

E. All electrical items provided under Division 15 of these Specifications shall be provided in accordance with applicable sections of Division 16. Enclosures shall be the same NEMA type as specified in Section 16050 or on the Electrical Drawings.

F. Produce complete finished operating systems and provide all incidental items required as part of the work, regardless of whether such item is particularly specified or indicated.

1.02 Qualifications

All materials shall be furnished by manufacturers fully experienced, reputable and qualified in the manufacture of the particular material to be furnished. All material shall be designed, constructed and installed in accordance with standard practices and methods and shall comply with these Specifications as applicable.

1.03 Submittals

A. Submittals for all mechanical work shall conform to the requirements of Section 01340 of these Specifications.

B. Drawings and Specifications

1. The Drawings are diagrammatic and, unless specifically dimensioned, are intended to show only the general arrangement of equipment and accessories, and the general routing of piping, ductwork, etc. The Drawings do not specifically show every fitting, offset, contour, etc., required to accomplish the intended work or to avoid every interference that may be encountered. Arrange all work to fit within the allowed space without modifying any building structure or property, and make readily accessible all equipment and accessories requiring servicing or maintenance.

2. Should any changes be deemed necessary in items shown on the Drawings, shop drawings, descriptions and the reason for the proposed changes shall be submitted to the Engineer for approval.

3. Exceptions and inconsistencies in Drawings and Specifications shall be brought to the Engineer's attention before Bids are submitted.

4. Titles of Sections and Articles in these Specifications are introduced merely for convenience and are not to be construed as complete segregation of tabulation of the various units of material and/or work.

C. Operating and Maintenance Instructions: Complete, neatly framed instructions for the care and operation of all equipment shall be provided and installed where directed. Instruct the Owner's personnel during the adjustment and testing period in the presence of both the Owner's representative and the Engineer, demonstrate the complete operation of each and every piece of apparatus. In the case of heating and air conditioning equipment, both the heating and cooling functions shall be fully demonstrated at such times as are required. Instructional periods shall be for such lengths of time as may be necessary to thoroughly familiarize operating personnel with the proper care, operation and maintenance of the equipment.

D. Permits and Inspections

1. Obtain and pay for, as part of the mechanical work, all permits, fees, licenses, taxes, assessments, etc., necessary for performing the work outlined in the Contract Documents.

2. All applicable certificates of inspection shall be delivered to the Owner at the completion of the work.

1.04 Transportation and Delivery

A. As part of the mechanical work, provide and pay for all transportation, delivery and storage required for all equipment and materials.

B. The mechanical contractor shall closely coordinate the ordering and delivery of all mechanical equipment with other trades to assure that equipment will be delivered in time to be installed in the building without requiring special or temporary access or building modifications. Certain equipment may have to be installed prior to the erection of the building walls or roofs.

1.05 Storage and Protection

A. Upon receipt of all equipment and materials, they shall be properly stored to protect them from vandalism, theft, the elements and other harm or damage. Any equipment or materials received in a damaged condition, or damaged after receipt, shall not be installed. Only new undamaged equipment in first-class operating condition shall be installed.

B. Provide protection covers, skids, plugs or caps to protect equipment and materials stored or otherwise exposed during construction.

1.06 Quality Assurance

A. The manufacturer shall provide written certification to the Engineer that all equipment furnished complies with all applicable requirements of these Specifications.

B. Codes and Standards

1. All mechanical work shall be performed in accordance with all applicable codes, ordinances, rules and regulations of local, state, federal or other authorities having jurisdiction. As a minimum, this shall include:

a. 2000 Standard Building Code

b. 2000 Standard Mechanical Code

c. 2000 Standard Energy Conservation Code

d. 2000 Standard Plumbing Code

e. 2000 Standard Fuel Gas Code

f. 2000 Standard Fire Code

g. National Fire Protection Association Codes

h. Unless otherwise specified on the Drawings, the latest edition of all codes, including state and local amendments or ordinances, shall be followed. Where code or other requirements exceed the provisions shown on the Contract Documents, notify the Engineer. Where provisions of the Contract Documents exceed code or other requirements, the work shall be performed in accordance with the Contract Documents.

2. All equipment, products and materials used in mechanical work shall be Underwriter's Laboratories listed or labeled as applicable.

3. Schedule all required tests and inspections with a minimum of 72 hours prior notice to the Owner and the Engineer.

C. Allowable Tolerances: Equipment shall be readily adaptable for installation and operation in the structures shown on the Drawings. No responsibility for alteration of a planned structure to accommodate other types of equipment will be assumed by the Owner. Equipment which requires alteration of the structures will be considered only if the Contractor assumes all responsibility for making and coordinating all necessary alterations. All such alterations shall be made at the Contractor's expense.

Part 2 Products

2.01 Materials and Construction

A. General

1. All equipment, materials, accessories, etc. used as part of the mechanical work shall be new, of the best grade and quality and of current production, unless

specified otherwise. Equipment not specified in the Contract Documents shall be suitable for the intended use and shall be subject to approval by the Engineer.

2. All equipment, products and materials used in mechanical work shall be Underwriter's Laboratories listed or labeled as applicable.

3. All equipment, products and materials shall be free of defects and shall be constructed to operate in a safe manner without excessive noise, vibration, leakage or wear.

4. Electric motors shall be standard efficiency, drip-proof type unless otherwise specified.

B. Piping: See appropriate sections of Division 15 for Specifications on various piping systems. See Part 3 of this Section for general stipulations on installation of piping systems.

C. Valves: See appropriate sections of Division 15 for Specifications and Part 3 of this Section for general stipulations on valve installation.

D. Unions: Provide and install unions between each item of equipment and the valve controlling and/or the various piping connections to it.

1. Steel Pipe: Unions 2-1/2-inches and smaller shall have ground joints. Unions 3-inches and larger shall have flanged unions.

2. Copper Pipe: Unions 2-1/2-inches and smaller shall have brass ground joints, copper to copper. Unions 3-inches and larger shall have brass flanged unions, with brass bolts.

3. PVC Pipe: Unions 2-inches and smaller shall have threaded Buna O-rings. Unions 2-1/2-inches and larger shall be flanged.

E. Strainers

1. Strainers in water lines shall have cast iron bodies, with standard pattern, stainless steel or monel baskets with standard perforations and shall be equal to Hellan Fluid Strainer, Type D, unless otherwise specified in other sections of Division 15.

2. All strainers shall be of the same size as the piping in which they are installed. Provide dielectric union, if necessary, to isolate strainer from pipe material.

F. Equipment Bases: Each piece of equipment which is motor driven shall be furnished with an approved base, which shall be in addition to the foundation. Each base shall be furnished integral with the equipment or apparatus, or shall be furnished as a separate item, designed to accommodate the equipment or apparatus. Submit shop drawings for all foundations and supports for review.

G. Dielectric Isolation

1. Wherever copper, brass or bronze piping systems are connected to steel or iron piping systems, this connection shall be made with dielectric isolators. The dielectric isolators shall be so designed that non-ferrous piping materials shall be isolated by the use of Teflon or nylon isolating materials made up in the form of screwed type unions or insulating gaskets and bolt sleeves and washers for standard flanged connection. All dielectric isolators shall be selected for the pressure of the system involved.

2. Dielectric isolators shall be Watts, Epco, Crane or Maloney.

Part 3 Execution

3.01 Installation

A. General

1. All equipment, materials, accessories, etc. used as part of the mechanical work shall be installed according to the manufacturer's recommendations and in accordance with the best practice and standards for the work.

2. All work shall be performed by competent personnel satisfactory to the Owner and Engineer. All work requiring particular skill shall be performed by persons that have had special training and past experience in that line of work.

B. Equipment Support

1. Major equipment supports (concrete foundations, framed structural openings, etc.), shall be furnished and installed under other Divisions of the Contract Documents as shown on the Drawings. The mechanical work shall include the furnishing and installation of all miscellaneous equipment supports, housekeeping pads, structural members, rods, clamps and hangers required to provide adequate support of all mechanical equipment.

2. Unless otherwise shown on the Drawings, all mechanical equipment, piping and accessories shall be installed level, square and plumb.

3. All equipment, piping, etc. supported by structural joists shall be supported by the top chord only of such joists. Hangers shall not be attached to the bottom chord of any joists.

C. Pipe and Ductwork Penetrations

1. Sleeves shall be installed in all masonry or concrete walls, floors, roofs, etc. for pipe and ductwork penetrations. Sleeves for pipe shall be standard weight steel pipe. Sleeves for ductwork shall be 20 gauge galvanized steel. Sleeves shall be sized to provide a minimum of 1/4-inch clearance between the sleeve and pipe or duct. For insulated pipes or ducts, the clearance shall be between the sleeve and the insulation. Each penetration shall be firestopped or otherwise protected

by listed materials with a minimum fire rating equivalent to the rating of the structural element where it occurs.

2. As far as possible, all pipe and ductwork penetrations shall be provided for at the time of masonry or concrete construction. Where drilling is required, only core drills shall be used. Star drills shall not be used.

3. All pipes penetrating walls or floors of any construction shall be installed with escutcheon plates on both sides of the penetration securely fastened to the wall or floor. In exposed areas, escutcheon plates shall be chrome-plated. All escutcheons plates shall be sized to completely conceal the penetration. Ductwork penetrating walls or floors of any material shall be installed with closure plates on both sides of the penetration. Penetrations through exterior walls shall be sealed weathertight.

4. All penetrations through fire rated structures shall be firestopped with materials listed for such use and shall equal or exceed the rating of the structure being penetrated.

D. Flashing

1. All piping and ductwork penetrating roofs shall be flashed in an approved manner, shall be watertight and shall conform to the requirements detailed in other sections of these Specifications.

2. Flashing for piping shall be sheet lead of not less than six pounds per square foot, shall have a base not less than two square feet, and shall extend up over and into the open end of the pipe. All flashing shall be properly caulked and sealed.

E. Welding

1. All welded pipe joints shall be made by the fusion welding process, employing a metallic arc or gas welding process.

2. All welding operations shall conform to the latest recommendations of the American Welding Society or to the applicable provisions of the ASME Code for Pressure Piping. Pay for all electrical energy and/or gas used in welding.

F. Equipment Connections

1. Extend waste, water, gas and compressed air lines to the various items of equipment as indicated or required, terminating the lines where and as directed. Make all final plumbing connections. Provide shut-off valves and unions at each water, gas and air connection to each item of equipment requiring same. Furnish all P-traps for waste connections to this equipment.

2. During the roughing-in phase of the work, extend service lines to the various items of equipment, terminating them at the proper points for connection to those items of equipment as indicated on the detailed drawings of the equipment and/or as directed. During the time the equipment is being installed or after it is in place, make all final connections thereto.

3. The equipment manufacturer will provide all holes in the tops, racks, splash backs or aprons required and will furnish all sinks, waste tailpieces, supply fittings, cocks, pedestals, etc., required for all water and gas to be mounted on the equipment.

G. Cutting and Patching: Where cutting or patching becomes necessary to permit the installation of any work or should it become necessary to repair any defects that may appear in patching, the Contractor shall make the necessary repair at no cost to the Owner.

H. Large Apparatus and Equipment: All large apparatus and equipment which is specified or shown to be furnished or installed under this Contract, and which may be too large to be moved into its final position through the normal building openings planned, shall be placed in its approximate final position before any obstructing structure is installed. All apparatus shall be cribbed up from the floor and cared for as specified under "Storage and Protection" or as directed by the Engineer.

I. Cross Connection and Interconnections

1. No plumbing fixture, device or piping shall be installed which will provide a cross connection or interconnection between a distributing supply for drinking or domestic purposes and a polluted supply, such as drainage system or a soil or waste pipe which will permit or make possible the backflow of sewage, polluted water or waste into the water supply system.

2. Verify location of all existing utilities and make all connections to existing facilities as required.

J. Thermal Expansion of Piping

1. Furnish and install all devices required to permit the expansion and contraction of all work subject to expansion and contraction, particularly in steam, water supply and circulating systems. In these systems employ expansion joints and guides where required or directed by the Engineer. Swing joints, turns, expansion loops or long offsets shall be provided wherever shown on the Drawings or wherever necessary to allow for the expansion of piping within the building. Broken pipes or fittings broken due to rigid connections must be removed and replaced at no cost to the Owner.

2. Anchor all lines having expansion joints so that expansion and contraction effect is equally distributed. Verify exact locations of anchors and guides with the Engineer prior to making installation. The lines having expansion joints shall be accurately guided on both sides of each joint. These guides shall consist of

saddles and "U" clamps where not otherwise indicated and shall be properly arranged and supported. Submit complete details for approval.

3. In installing expansion members, exercise care to preserve proper pitch on lines. Furnish and install all special fittings, connectors, etc., as required.

3.02 Surface Preparation, Shop, and Field Painting

A. Unless otherwise specified herein or shown on the Drawings, general painting of mechanical equipment shall be in accordance with Section 09900 of these Specifications.

B. Touch-up painting of mechanical equipment shall be part of the mechanical work. All equipment and materials that are painted or coated by the manufacturer shall be touched-up prior to completion to conceal any and all scratches or other finish irregularities and to maintain the integrity of the paint or coating. All painting and coating shall match the original and shall conform to the requirements detailed in other sections of these Specifications.

C. All roof-mounted equipment shall be painted with an exterior paint of a type and color as approved by the Owner. The painting shall not impair the performance of the equipment in any manner.

3.03 Inspection and Testing

A. Testing of Pipelines: Refer to Section 02666 of these Specifications for general requirements.

B. The mechanical work shall include all materials and labor required to properly test and balance all mechanical systems as required by codes and as described herein.

C. Concealed, underground and insulated piping shall be tested in place before concealing, burying or covering. Tests shall be conducted in the presence of the Engineer or designated representative. Equipment, materials and instruments required for tests shall be furnished without incurring additions to the Contract. The Contractor shall schedule all required tests and inspections with a minimum of 72 hours prior notice to the Owner and the Engineer.

D. Unless otherwise specified herein, all mechanical piping shall be tested as required by Code to 1-1/2 times the rated system pressure or 150 psig, whichever is greater. Care shall be taken to isolate all equipment not suitable for this test pressure by installing pipe caps or blank flanges at the equipment connections. All valves and fittings shall be tested under pressure.

E. Unless more stringent requirements are specified herein, the following procedures shall be used for pressure testing building mechanical piping gravity-drained piping systems. Soil, waste and vent piping shall be tested with water before installing fixtures. Water test shall be applied to the system either in its entirety or in sections. If the test is applied to the entire system, all openings in the piping shall be closed except to highest

opening, and the system shall be filled with water to the point of overflow. If the system is tested in sections, each opening except the highest opening of the section under test shall be plugged and each section shall be filled with water and tested with at least a 10-foot head of water. Each joint or pipe in the building except the uppermost 10 feet of the system shall be submitted to a test with at least a 10 foot head of water. The water shall be kept in the system, or in the portion under test, for at least one hour before the inspection starts; no drop in the water level will be acceptable.

F. The services of an independent testing and balancing agency shall be used to balance the air and water distribution systems.

3.04 Cleaning

A. At all times, the premises shall be kept reasonably clean and free of undue amounts of waste, trash and debris by periodic cleaning and removal. After completion, all foreign material, trash and other debris shall be removed from the site.

B. After all equipment has been installed, but prior to testing and balancing, all equipment, piping, ductwork, etc. shall be thoroughly cleaned both inside and out.

C. All air moving equipment operated during construction shall have filters in place and changed regularly so as to be clean.

D. After testing and balancing and just prior to Owner review and acceptance, all systems shall be finally cleaned and shall be left ready for use. Air filters shall be new and piping strainers shall be clean.

END OF SECTION

Part 1 General

1.01 Scope

A. Provide all labor, materials, equipment and incidentals necessary to construct all ductile iron pipe and appurtenances located inside and under buildings and structures, and test as shown on the Drawings and as specified herein.

B. Ductile iron pipe and appurtenances covered under this Section shall include all interior pipe and accessories to the outside face of structures and buildings, except where there is no joint at the outside face. Where there is no joint at the exterior face, this Section shall include all ductile iron pipe and accessories within two feet of the exterior face of the structure or building.

1.02 Submittals

A. Complete shop drawings on all piping and fittings shall be submitted to the Engineer in accordance with the requirements of Section 01340 of these Specifications.

B. Shop drawings shall indicate piping layout in plan and/or elevations and shall include a complete schedule of all pipe, fittings, specials, hangers and supports. Special castings shall be detailed showing all pertinent dimensions. Special coatings shall be clearly identified.

C. The Contractor shall submit written evidence to the Engineer that the products furnished under this Section will conform with the material and mechanical requirements specified herein. Certified copies of independent laboratory test results or mill test results from the pipe supplier may be considered evidence of compliance provided such tests are performed in accordance with the appropriate testing standards by experienced, competent personnel. In case of doubt as to the accuracy or adequacy of mill tests, the Engineer may require that the Contractor furnish test reports from an independent testing laboratory on samples of pipe materials.

Part 2 Products

2.01 Ductile Iron Pipe (DIP)

A. Ductile iron pipe shall be utilized where shown on the Drawings.

B. Ductile iron pipe shall be manufactured in accordance with AWWA C151. All pipe, except specials, shall be furnished in nominal lengths of 18 to 20 feet. Sizes will be as shown on the Drawings. All pipe shall have a minimum pressure rating as indicated in the following table, and corresponding minimum wall thickness, unless otherwise specified or shown on the Drawings:

Pipe Sizes (inches)	Pressure Class (psi)
4 - 12	350
14 - 18	350
20	300
24	250

C. Flanged pipe minimum wall thickness shall be equal to Special Thickness Class 53. Flanges shall be furnished by the pipe manufacturer.

2.02 Fittings and Accessories

A. Fittings shall be ductile iron and shall conform to AWWA C110/ANSI A21.10 with a minimum rated working pressure of 150 psi.

B. Flanged elbow fittings shall be ANSI pattern using short radius elbows except where noted differently on the Drawings. Special fittings and ductile iron wall pipes and sleeves shall conform to the dimensions and details as shown on the Drawings.

C. Solid sleeves shall permit the connection of plain end ductile iron pipe. Solid sleeves shall meet the requirements of ANSI/AWWA C110 for long pattern and have a minimum pressure rating of 250 psi. Solid sleeves shall have mechanical or restrained joints as specified in this Section and as shown on the Drawings. Solid sleeves shall be used only in locations shown on the Drawings.

D. Service Clamps: Service clamps shall be ductile iron, double strap clamps equal to Mueller.

2.03 Joints

A. General

1. Unless shown or specified otherwise, joints for buried service shall be push-on or restrained joint type for pipe and standard mechanical, push-on or restrained joints for fittings. Joints for exposed service shall be flanged for pipe and fittings, unless shown otherwise.

2. Provide the necessary bolts for connections. All bolts and nuts shall be threaded in accordance with ANSI B1.1, Coarse Thread Series, Class 2A external and 2B internal fit. All bolts and nuts shall be made in the U.S.A.

3. In all cases, gaskets shall be made of material that will not be damaged by the fluid being transported nor by the environment in which the pipe is installed.

B. Push-On and Mechanical Joints

1. Joints shall conform to AWWA C111/ANSI A21.11.

2. Bolts and nuts shall be Tee Head bolts and nuts of high strength low-alloy steel in accordance with ASTM A 242 to the dimension shown in AWWA C111/ANSI A21.11.

3. Gaskets shall be in accordance with AWWA C111/ANSI A21.11 and shall be constructed of plain rubber unless otherwise shown on the Drawings.

4. Mechanical joint glands shall be ductile iron.

C. Flanged Joints

1. Flanged joints shall conform to AWWA C115/ANSI A21.15. Flanges shall be ductile iron and shall be furnished by the pipe manufacturer.

2. Flanged joints shall be bolted with through stud or tap bolts of required size as directed. Bolt length and diameter shall conform to ANSI/AWWA C115 for Class 125 flanges shown in ANSI/ASME B16.1.

   a. Bolts for exposed service shall be zinc plated, cold pressed, steel machine bolts conforming to ASTM A 307, Grade B. Nuts for exposed service shall be zinc plated, heavy hex conforming to ASTM A 563. Zinc plating shall conform to ASTM B 633, Type II.

   b. Bolts for submerged service shall be stainless steel machine bolts conforming to ASTM A 193, Grade B8. Nuts shall be heavy hex, stainless steel conforming to ASTM A 194, Grade 8.

3. Gaskets shall be made of 1/8-inch thick, Neoprene. Gaskets may be ring type or full face type.

4. For 16-inch and larger flanged joints use gaskets equal to American “Toruseal” or US Pipe “Flange Tyte”.

5. Flanged ductile iron pipe shall have flanges cast solidly or threaded to the pipe barrel. Pipe threads shall be of such length that with flanges screwed home, the end of the pipe shall project beyond the face line of the flange. Flange and pipe shall then be machined to give a flush finish to the pipe and the flange and surface shall be normal to the axis of the pipe. Ductile iron flanges shall be of such design that the flange neck completely covers the threaded portion of the pipe to protect same against corrosion. All pipe with threaded type flanges shall be assembled, faced, and drilled at the point of manufacture, unless otherwise approved by the Engineer.

6. Flange filler shall conform to AWWA C110/ANSI A21.10. Joint bolt length shall be increased by the thickness of the flange filler.

7. Where tap or stud bolts are required, flanges shall be drilled and tapped accordingly.

D. Restrained Joints

1. Restrained joints: Restrained joints shall be manufactured restrained joint or restraining gasket joint as specified below.

a. Manufactured restrained joints shall be American, FLEX-RING or LOK-RING, U.S. Pipe TR FLEX or HP LOK, or Clow SUPER-LOCK.

b. Restraining gasket joints shall be assembled with American Fast-Grip gaskets or US Pipe FIELD LOK gasket.

c. Retainer glands on a mechanical joint may be used as a restrained joint only where retainer glands are specifically shown on the Drawings or where specifically specified.

d. Where retainer glands are allowed, in lieu of retainer glands specified elsewhere, the joint may be assembled with US Pipe MJ FIELD LOK gasket.

e. No field welding for manufactured restrained joint pipe assembly will be permitted. Where field cutting of restrained joint pipe is required, the joint may be assembled with American Field Flex-Rings or US Pipe TR FLEX GRIPPER Rings.

2.04 Wall Pipes

A. Where piping passes through concrete structures, furnish and install wall sleeves unless wall pipes or other provisions are specifically shown on the Drawings.

B. Wall Pipes

1. Wall pipes shall be either statically cast ductile iron with integral waterstop/thrust collar or centrifugally cast ductile iron with a continuously welded waterstop/thrust collar. Unless specified or shown otherwise, wall pipes shall be flange end type.

2. Wall pipes shall be cast and/or fabricated and lined in one manufacturer's facility and delivered to the job site ready for use.

2.05 Coatings

The exterior of pipe and fittings for buried service shall be factory coated with an asphaltic coating conforming to AWWA C151/ANSI 21.51 for ductile iron pipe, AWWA C115/ANSI 21.15 for flanged pipe and AWWA C110/ANSI 21.10 for fittings. Pipe and fittings which shall be exposed or submerged shall be factory coated with a general purpose rust inhibitive primer compatible with the type of paint which will be field applied in accordance with the requirements of Section 09900 of these Specifications.

2.06 Retainer Glands

Retainer glands for ductile iron pipe shall be Megalug Series 1100, as manufactured by EBAA Iron, Uni-Flange Series 1400, as manufactured by Ford Meter Box Company, or Star Pipe Products StarGrip Series 3000.

Part 3 Execution

3.01 Cutting

A. When new or existing pipe is required to be cut, the pipe shall be cut in such a manner as to leave a smooth end normal to the axis of the pipe.

B. All cutting of ductile iron pipe shall be performed with a cutting saw. All burrs shall be removed from the inside and outside edges of all cut pipe. All damaged linings and coatings shall be repaired.

3.02 Joint Assembly

A. General: Ductile iron pipe shall be assembled in accordance with ANSI/AWWA C600.

B. Push-On Joints: The inside of the bell and the outside of the pipe from the plain end to the guide stripe shall be wiped clean immediately before assembling the pipe joint. Then the rubber gasket shall be inserted into a groove or shaped recess in the bell. Both the bell and spigot ends to be joined shall be wiped again to ensure they are thoroughly clean. A liberal coating of special lubricant furnished by the pipe manufacturer shall be applied to the outside of the pipe. The plain end shall be centered in the bell and the spigot pushed home.

C. Mechanical Joints

1. The surfaces with which the rubber gasket comes in contact shall be brushed thoroughly with a wire brush just prior to assembly to remove all loose rust or foreign material which may be present and to provide clean surfaces which shall be brushed with a liberal amount of soapy water or other approved lubricant just prior to slipping the gasket over the spigot end and into the bell. Lubricant shall be brushed over the gasket prior to installation to remove loose dirt and lubricate the gasket as it is forced into its retaining space.

2. Joint bolts shall be tightened by the use of wrenches and to a tension recommended by the pipe manufacturer. When tightening bolts, the gland shall be brought up toward the pipe bell. If effective sealing is not attained at the maximum torque indicated above, the joint shall be disassembled and reassembled after thorough cleaning. Overstressing of bolts to compensate for poor installation shall not be permitted.

3. After installation, bolts and nuts in buried piping shall be given two heavy coats of a bituminous paint. Bolts and nuts for exposed or submerged service shall be coated in accordance with the requirements of Section 09900 of these Specifications.

D. Flanged Joints

1. All flanges shall be true and perpendicular to the axis of the pipe. Flanges shall be cleaned of all burrs, deformations, or other imperfections before joining. Flanged joints shall be installed so as to ensure uniform gasket compression. All bolting shall be pulled up to the specified torque by crossover sequence. Where screwed flanges are used, the finished pipe edge shall not extend beyond the face of the flange, and the flange neck shall completely cover the threaded portion of the pipe.

2. Connections to equipment shall be made in such a way that no torque is placed on the equipment flanges. Connecting flanges must be in proper position and alignment and no external force may be used to bring them together properly.

3. After installation, bolts and nuts for exposed or submerged service shall be coated in accordance with the requirements of Section 09900 of these Specifications.

4. Flanged filler shall be used only where shown on the Drawings or approved by the Engineer to make up minor differences in pipe length, less than 3-inches. Joint bolts shall be increased in length by the thickness of the flange filler.

3.03 Drilling and Tapping

A. Wherever required ductile iron pipe and fittings shall be drilled and tapped to receive any other piping. All holes shall be drilled accurately at right angles to the axis of any pipe or fitting. Where plugs are drilled, holes shall be at right angles to the face of the plug.

B. Unless shown otherwise, small diameter pipes, less than 2-inches, shall be connected to ductile iron pipe using one of the following methods:

1. Direct tap.

2. Direct tap with service clamp.

3. Direct tap boss.

4. Tapped plug or flange on tapping saddle.

C. In no case shall the effective number of threads be less than 4.

3.04 Constructing Beneath and Beyond Structures

A. Construct beyond buildings and structures in accordance with Section 02610.

B. All ductile iron pipe installed under buildings or basins shall be encased and backfilled in accordance with Section 02200 of these Specifications.

C. All ductile iron pipes entering buildings or basins shall be adequately supported between the structure and undisturbed earth to prevent damage resulting from settlement of backfill around the structure.

3.05 Constructing Within Structures

A. Proper and suitable tools and appliances for safe and convenient handling and laying of pipe and fittings shall be used. Care shall be taken to prevent the pipe coating from being damaged, particularly cement linings on the inside of the pipes and fittings. Any damage shall be remedied as directed by the Engineer.

B. All pipe and fittings shall be carefully examined by the Contractor for defects just before installing and no pipe or fitting shall be installed if it is defective. If any defective pipe or fitting is discovered after having been installed, it shall be removed and replaced in a satisfactory manner with a sound pipe or fitting by the Contractor at Contractor's own expense.

C. All pipes and fittings shall be thoroughly cleaned before they are installed and shall be kept clean until they are used in the completed work. Open ends of pipe shall be kept plugged with a bulkhead during construction.

D. All elbows, tees, brackets, crosses, and reducers in pressure piping systems shall be adequately restrained against thrust.

E. Wall pipe and wall sleeves shall be accurately located and securely fastened in place before concrete is poured. All wall pipe and sleeves shall have wall collars properly located to be in the center of the wall where the respective pipes are to be installed. Pipe passing through the sleeve shall extend no more than three feet beyond the structure without a piping joint.

F. Wall pipe and wall sleeves shall be constructed when the wall or slab is constructed. Blocking out or breaking of the wall for later installation shall not be permitted.

G. Cutting or weakening of structural members to facilitate pipe installation shall not be permitted. All piping shall be installed in place without springing or forcing.

H. Exposed ductile iron piping shall be supported as shown on the Drawings.

3.06 Field Painting

Field painting of exposed and submerged pipe shall be in accordance with the requirements of Section 09900 of these Specifications.

3.07 Inspection and Testing

All testing shall be in accordance with the requirements of Section 02666 of these Specifications.

3.08 Disinfection

Following installation and testing, potable water lines shall be disinfected in accordance with the requirements of Section 02675 of these Specifications.

END OF SECTION

Part 1 General

1.01 Scope

A. The work covered by this Section includes furnishing all labor, equipment and materials required to install and test all polyvinyl chloride (PVC) pipe including unions, fittings, couplings, adapters and accessories as shown on the Drawings and/or specified herein.

B. The Contractor's attention is called to the fact that all piping and accessories are not necessarily shown completely on the Drawings which are more or less schematic. However, the Contractor shall furnish and install all piping indicated or required for proper operation of the equipment or services requiring such piping.

C. This Section includes piping and fittings in buildings and containment areas.

1.02 Submittals

A. Complete shop drawings and engineering data shall be submitted to the Engineer in accordance with the requirements of Section 01340 of these Specifications.

B. Shop drawings shall indicate piping layout in plan and/or elevations and shall include a complete schedule of all pipe, fittings, specials, hangers, and supports.

C. The Contractor shall furnish the Inspector with lists of all pieces of pipe and fittings in each shipment received. These lists shall give the serial or mark number, schedule or class, size, and description of each item received.

D. The Contractor shall submit written evidence to the Engineer that the products furnished under this Section will conform to the material and mechanical requirements specified herein. Certified copies of independent laboratory test results or mill test results from the pipe supplier may be considered evidence of compliance, provided such tests are performed in accordance with the appropriate testing standards by experienced, competent personnel. In case of doubt as to the accuracy or adequacy of mill tests, the Engineer may require that the Contractor furnish test reports from an independent testing laboratory on samples of pipe materials.

1.03 Storage and Protection

A. All piping and accessories shall be stored and protected in accordance with the requirements of Section 01611 of these Specifications.

B. All pipe and fittings shall be stored under cover.

C. All pipe and accessories shall be stored above ground and fully supported so as not to bend or deflect excessively under its own weight. Height of stacked pipe shall not exceed four feet. Bundled pipe shall not be stacked more than two bundles high.

D. Kinked, flattened, buckled, broken or otherwise defective pipe and fittings shall not be used and shall be removed from the site.

E. Pipe shall be handled using nylon slings. Wire rope slings or chains shall not be used.

1.04 Quality Assurance

A. The Contractor, at the Engineer's request, shall provide a certificate from the manufacturer of the pipe and fittings certifying that the manufacturer is fully competent and capable of manufacturing PVC pipe and fittings of uniform texture and strength that will fully comply with these Specifications and have so manufactured this class of pipe in sufficient quantities to be certain that it will meet all normal field conditions of usage. The manufacturer must have adequate equipment and quality control facilities to be sure that each extrusion of pipe is uniform in texture, dimensions and strength.

B. All pipe shall be tested and inspected at the place of manufacture for all requirements of the latest ASTM and Commercial Standard tests and certified copies of the test reports covering each shipment shall be submitted to the Engineer prior to laying.

C. Each length of pipe and each fitting shall have the following data clearly marked on each piece:

1. Nominal size.

2. Type and grade of material and ASTM standard.

3. SDR, class or schedule rating.

4. Manufacturer.

5. National Sanitation Foundation's seal of approval.

Part 2 Products

2.01 Polyvinyl Chloride (PVC) Gravity Drain Pipe

A. Pipe and fittings shall be manufactured in accordance with ASTM D 3034. The minimum wall thickness shall be that which will provide an SDR of 35. The pipe shall also have a minimum pipe stiffness of 46 psi at 5 percent deflection as determined by ASTM D 2412.

B. PVC gravity sewer or drain pipe shall be supplied in lengths not longer than 13 feet.

C. Fittings: Fittings for pipe 8-inches and less in diameter shall be one-piece with no solvent welded joints. Fittings for pipe 10-inches and larger in diameter may be fabricated using solvent welding. No field fabrication of fittings will be allowed. Fabrication shall be performed at the factory and the fittings shall be delivered ready for use.

D. Joints: Joints for pipe and fittings shall be of the integral bell and spigot type with a confined elastomeric gasket having the capability of absorbing expansion and contraction without leakage. Joints shall meet the requirements of ASTM D 3212; gaskets shall meet the requirements of ASTM F 477. The joint system shall be subject to the approval of the Engineer and shall be identical for pipe and fittings.

E. Manhole Connections

Solid wall and closed profile wall pipe: The sewer or drain pipe shall be connected to manholes utilizing a standard pipe section.

F. Acceptance: Acceptance will be on the basis of the Engineer's inspection and the manufacturer's written certification that the pipe was manufactured and tested in accordance with the applicable standards.

2.02 PVC Pressure Pipe

A. Schedule PVC Pipe and Fittings

1. The pipe and fittings shall be homogenous throughout and free from visible cracks, holes, foreign inclusions or other injurious defects. The pipe shall be as uniform as commercially practical in color, opacity, density and other physical properties.

2. The manufacturer shall provide waterstops, acceptable to the Engineer, which shall be applied to the outside of plastic pipe when the pipe is to be enclosed in any structure where concrete or mortar is used. Such waterstops will prevent leakage along the outer wall of the barrel of the pipe.

3. No single piece of pipe shall be laid on any part of the Project covered by this Specification, unless it is found to be generally straight. Such pipe shall have a maximum ordinate, as measured from the concave side of the pipe, not to exceed 1/16-inch per foot of length. If the deviation from straightness exceeds this requirement, then the particular piece of pipe shall be rejected for use until it can comply with this provision.

4. Unless specified or shown on the Drawings otherwise, use schedule PVC pipe for all interior and exterior plastic pipe.

5. Pipe: PVC pipe shown on the Drawings to convey potable water (PW), non-potable water (NPW) and chemical feeds shall be Schedule 80 PVC pipe as indicated on the Drawings. Pipe shall have solvent welded joints (unless noted otherwise) All pipe material shall be Grade 1, Type 1, polyvinyl chloride (PVC) in accordance with ASTM D 1784, Class 12454-B, Schedule 80 in accordance with ASTM D 1784. All pipe material shall be National Sanitation Foundation approved for use with potable water. Maximum lengths of pipe shall not exceed 20 feet.

6. Fittings: Fittings in PVC piping shall match pipe material. Such fitting shall comply with the requirements of ASTM D 2467 for Molded, Schedule 80, socket

welded fittings, D 2464 for threaded fittings and ANSI 150 pound for flanges. Flange bolts shall meet ANSI B16.1 (150 pound). All fittings for sodium hypochlorite (NaOCL) piping shall be solvent welded, using glue that does not contain silica and is suitable for use with sodium hypochlorite (NaOCL).

7. Solvent Welded Joints

a. Solvent welded joints shall be assembled per the manufacturer's recommendations with solvent cement complying with the requirements of ASTM D 2564 for PVC Solvent Cement.

b. All fittings shall be Schedule 80 with socket joints. Gaskets for flange fittings and unions shall be as recommended by pipe manufacturer. Gaskets for flange fittings and unions shall be Buna-N.

B. PVC Valves and Strainers

1. Unless otherwise shown or required, all valves, unions and strainers in PVC piping shall be constructed of Type I, Grade 1 PVC. Valves shall be NSF approved and shall have a working pressure of 150 psi.

2. Valves shall be as specified in Section 15100 of these Specifications.

3. Strainers shall have NPT threaded ends and 8 or 10 mesh strainer basket. Strainers on metering pump skids shall be as specified in Section 11249 of these Specifications.

2.03 PVC and CPVC Flexible Tubing

A. PVC Chemical Flexible Tubing :

1. Clear braided PVC tubing.

2. PVC insert fittings and PVC clamp.

3. Manufacturer and Model: KuriTec K3150.

2.04 Miscellaneous Hardware

Hardware, including nuts, bolts, screws, and all other miscellaneous hardware pieces, shall be titanium.

Part 3 Execution

3.01 Installation

A. All provisions with respect to trenching, backfilling, bedding, and pipe laying shall conform to the applicable requirements of Section 02224 of these Specifications.

B. Exposed piping shall be supported in accordance with the requirements of Section 15094 of these Specifications. Metal valves and valve boxes shall be supported independently of piping. PVC piping shall be isolated from direct contact with metal or concrete supports by a 1/32-inch sheet of neoprene.

C. When a joint consists of a PVC flange and a metal flange, the metal flange shall be flat faced and furnished with a full face, resilient gasket.

D. Where specifically shown or called for on the Drawings, service line taps into PVC pipe shall be made using tapping saddle constructed for use on plastic pipe. The saddle shall be constructed of bronze or brass, shall have all titanium bolts or screws and have a Buna-N gasket to provide a positive, watertight seal.

3.02 Cutting

A. When new or existing pipe is required to be cut, the pipe shall be cut in such a manner as to leave a smooth end normal to the axis of the pipe.

B. All cutting of PVC pipe shall be performed with a cutting saw. All burrs shall be removed from the inside and outside edges of all cut pipe. All damaged linings and coatings shall be repaired.

3.03 Joint Assembly

A. Push-On Joints: The inside of the bell and the outside of the pipe from the plain end to the guide stripe shall be wiped clean immediately before assembling the pipe joint. Then the rubber gasket shall be inserted into a groove or shaped recess in the bell. Both the bell and spigot ends to be joined shall be wiped again to ensure they are thoroughly clean. A liberal coating of special lubricant furnished by the pipe manufacturer shall be applied to the outside of the pipe. The plain end shall be centered in the bell and the spigot pushed home.

B. Mechanical Joints

1. The surfaces with which the rubber gasket comes in contact shall be brushed thoroughly with a wire brush just prior to assembly to remove all dirt or foreign material which may be present and to provide clean surfaces which shall be brushed with a liberal amount of soapy water or other approved lubricant just prior to slipping the gasket over the spigot end and into the bell. Lubricant shall be brushed over the gasket prior to installation to remove loose dirt and lubricate the gasket as it is forced into its retaining space.

2. Joint bolts shall be tightened by the use of wrenches and to a tension recommended by the pipe manufacturer. When tightening bolts, the gland shall be brought up toward the pipe bell. If effective sealing is not attained at the maximum torque indicated above, the joint shall be disassembled and reassembled after thorough cleaning. Overstressing of bolts to compensate for poor installation shall not be permitted.

3. After installation, bolts and nuts in buried piping shall be given two heavy coats of bituminous paint.

C. Flanged Joints

1. All flange adapters shall be installed true and perpendicular to the axis of the pipe. Flanged joints shall be installed so as to ensure uniform gasket compression. All bolting shall be pulled up to the specified torque by crossover sequence. The finished pipe edge shall not extend beyond the face of the flange.

2. Connections to equipment shall be made in such a way that no torque is placed on the equipment flanges. Connecting flanges must be in proper position and alignment and no external force may be used to bring them together properly.

3. Bolts and nuts for exposed or submerged service shall be coated in accordance with the requirements of Section 09900 of these Specifications.

D. Solvent-Welded Joints: All solvent-welded joints shall be in accordance with ASTM ASTM D 2855. All solvent-welded joints shall be joined using IPS EZ Weldon Wet R' Dry PVC 725.

3.04 Constructing Beneath and Beyond Structures

A. Construct piping beyond buildings of structures in accordance with Section 02610 of these Specifications.

B. All pipe installed under buildings or basins shall be encased and backfilled in accordance with Sections 02200 and 02224 of these Specifications.

C. All pipe entering buildings or basins shall be adequately supported between the structure and undisturbed earth to prevent damage resulting from settlement of backfill around the structure.

3.05 Constructing within Structures

A. Proper and suitable tools and appliances for safe and convenient handling and laying of pipe and fittings shall be used. Any damage shall be remedied as directed by the Engineer.

B. All pipe and fittings shall be carefully examined by the Contractor for defects just before installing and no pipe or fitting shall be installed if it is defective. If any defective pipe or fitting is discovered after having been installed, it shall be removed and replaced in a satisfactory manner with a sound pipe or fitting by the Contractor at Contractor's own expense.

C. All pipes and fittings shall be thoroughly cleaned before they are installed and shall be kept clean until they are used in the completed work. Open ends of pipe shall be kept plugged with a bulkhead during construction.

D. All elbows, tees, brackets, crosses, and reducers in pressure piping systems shall be adequately restrained against thrust.

E. Wall pipe and wall sleeves shall be accurately located and securely fastened in place before concrete is poured. All wall pipe and sleeves shall have wall collars properly located to be in the center of the wall where the respective pipes are to be installed. Pipe passing through the sleeve shall extend no more than three feet beyond the structure with a piping joint.

F. Wall pipe and wall sleeves shall be constructed when the wall or slab is constructed. Blocking out or breaking of the wall for later installation shall not be permitted.

G. Cutting or weakening of structural members to facilitate pipe installation shall not be permitted. All piping shall be installed in place without springing or forcing.

H. Exposed piping shall be supported as shown on the Drawings and specified in Section 15094 of these Specifications.

3.06 Inspection and Testing

A. After all piping has been placed and backfilled between the joints, each run of newly laid pipe, or any valved section thereof, shall be tested by the Contractor in the presence of the Engineer, and tests shall be in accordance with the requirements of Section 02666 of these Specifications.

B. All piping shall be subject to a hydrostatic gauge pressure equal to the rated pressure class of the pipe being tested. Dual containment pipe shall be hydrostatic tested for both the inner and outer pipes and shall be performed as outlined in the Uniform Plumbing Code Section 318 as directed by the local Administrative Authority. Specifically, a water pressure test at 1.5 times (150%) the normal working pressure of the inner pipe should be applied to both the inner and outer walls in separate tests. The allowable leakage shall be as noted in Section 02666. The duration of the test shall be a minimum of two hours.

C. The Contractor shall take all precautions necessary to protect any equipment that might be damaged by the pressures used in the tests. Delicate equipment shall be valved off, removed or otherwise protected.

D. All piping shall be securely anchored and restrained against movement prior to application of test pressures. Prior to the pressure test, pipe laid in trenches shall be partially backfilled adequately to secure the pipe during the test. All joints, fittings, and valves will be left open where possible. All exposed pipe, fittings, valves and joints shall be carefully examined during the pressure test.

E. Before applying the specified test pressure, all air shall be expelled from the pipe. If hydrants, blow-offs, or air release valves are not available at the high places, the Contractor shall make the necessary taps at points of highest elevation before the test is made and insert plugs after the test has been completed.

F. Any excessive leakage developing during the test shall be corrected at the Contractor's expense. If the defective portion cannot be located, the Contractor, at Contractor's expense, shall remove and reconstruct as much of the original work as necessary to obtain a facility meeting the specified leakage limits.

G. After all tests on any section have been completed to the satisfaction of the Engineer, the Contractor shall carefully clean, blow out, and drain the line of all water to prevent the freezing of the same. The Contractor shall also demonstrate to the satisfaction of the Engineer that any and all lines are free from obstructions and foreign material.

H. The Contractor shall bear the complete cost of the tests, including set-up, labor, temporary piping, blocking, gauges, bulkheads, water, air, soap solutions and any other materials required to conduct the tests.

3.07 Disinfection

After installation and testing, all potable water piping shall be disinfected in accordance with the requirements of Section 02675 of these Specifications.

END OF SECTION

Part 1 General

1.01 Scope

A. The work of this Section includes all pipe supports, hangers and brackets necessary to install piping furnished under these Contract Documents. The Contractor shall furnish and install all foundations, anchor bolts, pipe supports, shims, hangers, clamps and hardware required for a complete installation as shown on the Drawings and/or specified herein.

B. The Drawings do not show every pipe hanger location, but are intended to provide a guide as to type and usage of pipe supports intended under this Contract. The Contractor shall provide all pipe supports required to securely support all piping in accordance with the referenced standards.

1.02 Project Conditions

A. Building structures shall be erected under other sections of these Specifications and should be essentially complete prior to starting work under this Section.

B. The Contractor shall visit the Project site prior to the Bid to become familiarized with the extent of existing construction and to determine the scope of coordination required between the existing work and work specified in this Section.

C. The Contractor shall be given copies of the structural steel drawings for use in developing pipe support shop drawings. The Contractor shall be responsible for field verifying existing dimensions prior to fabrication of pipe support systems.

1.03 Project Scheduling

The Contractor shall coordinate scheduling of pipe support installation with the piping system installation to prevent any damage to installed piping due to lack of pipe supports.

1.04 Submittals

Complete shop drawings and engineering data shall be submitted to the Engineer in accordance with the requirements of Section 01340 of these Specifications.

1.05 Storage and Protection

Pipe supports and accessories shall be stored and protected in accordance with the requirements of Section 01640 of these Specifications.

1.06 Quality Assurance

A. Work shall be installed by workers experienced in the design, selection, fabrication and installation of pipe support systems.

B. Selection, fabrication and installation of pipe hangers and supports shall conform to the requirements of ANSI B31.1, MSS SP-58, SP-69 and SP-89.

C. Pipe support system shall utilize standard manufactured hangers and supports wherever possible.

D. Pipe support materials in contact with piping shall be compatible with the piping materials such that neither shall have a deteriorating action on the other.

E. Supplemental steel shall be designed per AISC Steel Construction Manual or Standard Building Code.

Part 2 Products

2.01 Acceptable Manufacturers

Pipe support products shall be manufactured by ITT Grinnell, B-Line Systems, or Michigan Hanger Company.

2.02 Materials and Construction

A. All structural steel shall conform to ASTM A 36.

B. All pipe support columns shall conform to ASTM A 53, Grade B and shall be minimum Schedule 40.

C. All embedded anchor bolt materials shall conform to ASTM A 193, Grade B8; ASTM A 276, Type 304, or IFI-104, Grade 304. Nuts shall be heavy hex nuts conforming to ASTM A 194, Grade 8 or IFI-104, Grade 304. Minimum anchor bolt size for pipe supports shall be 5/8-inch diameter.

D. All rod and bolting materials in contact with cold piping (less than -20 degrees F) shall conform to ASTM A 320, Grade B8. Nuts shall be heavy hex nuts conforming to ASTM A 194, Grade 8 or 8T.

E. All rod and bolting materials shall conform to ASTM A 307, Grade B. Nuts shall be heavy hex nuts conforming to ASTM A 307.

F. All carbon steel or malleable iron straps, hangers, clamps, U-bolts and other hardware in contact with the pipe shall be shop primed except where specified or shown on the Drawings to be galvanized.

G. Expansion type anchor bolts shall be of stainless steel construction and shall comply with Federal Specifications FF-S-325.

H. Long runs of pipe subject to expansion shall be hung by means of adjustable swivel pipe roll hangers equal to Grinnell, Figure 181.

I. Short runs of uninsulated pipe subject to expansion in sizes up to and including 3-1/2-inches as well as all pipe of those sizes not subject to expansion shall be hung by means of adjustable swivel, split pipe ring equal to Grinnell, Figure 104.

J. Insulated piping and tubing, short lengths of 4-inches and larger pipe subject to expansion, and pipe 4-inches and larger not subject to expansion shall be hung by means of adjustable steel clevis hangers equal to Grinnell, Figure 260.

K. Pipe 2-inches and less in diameter and not subject to expansion may, when paralleling walls, be supported by single hook clamp hangers equal to Grinnell, Figure 168.

L. Flat strap hangers will not be permitted. Hangers relying on mastics or adhesives shall not be used.

M. Pipe supported from underneath and subject to expansion shall have adjustable pipe roll stand supports equal to Grinnell, Figure 274. The pipe roll stand shall be supported by concrete piers, structural steel or steel brackets as required.

N. Pipe supported from underneath and not subject to expansion shall have cast-in-place concrete supports as shown on the Drawings or adjustable pipe saddle supports on properly sized pipe stanchions and ample, properly grouted floor flanges. Saddle supports shall be equal to Grinnell, Figure 264.

O. Hangers suspended from structural steel shall be supported on UFS beam clamp equal to Grinnell, Figure 228L or 292L, with links as required.

P. Hangers from concrete work shall be secured by universal, galvanized metal inserts equal to Grinnell, Figure 282, placed in the concrete at the time of pouring. Wooden plugs or other improvised means shall not be used for any form of hanger fastening.

Q. Steel or concrete pipe supports for all piping between undisturbed earth and face of structures shall be in accordance with the details shown on the Drawings.

R. All interior and exterior concrete piers shall be Class "A" concrete meeting the requirements of these Specifications.

S. Rods for supporting suction bells or foot valves of pump intakes shall be stainless steel of the size shown on the Drawings. The rods shall be furnished complete with stainless steel turnbuckles and eyes or other approved means for connection to the suction bell and stainless steel eye bolt anchored in the concrete. Supports for other pump suction pipelines shall be as shown on the Drawings.

T. Uninsulated copper tubing shall be hung by means of copper-plated, split ring hangers with copper-plated sockets equal to Grinnell Figure CT-109.

U. Riser clamps for vertical piping shall be steel riser clamps equal to Grinnell Figure 261.

Part 3 Execution

3.01 Installation

A. General

1. Pipe hangers and supports shall be installed in complete conformance with the manufacturer's recommendations and the Contract Documents.

2. Pipe hangers, trapeze hangers, upper attachments and other supports shall be selected based on pipe size. Provide all hangers and rods, turnbuckles, angles, channels and other structural supports to support the piping systems. Rods for pipe hangers shall be as follows:

Hanger Rod Diameter	Pipe Size
3/8"	2" and smaller
1/2"	2-1/2" and 3"
5/8"	4" and 5"

3. Intermediate pipe supports provided between building structural members so as not to exceed maximum support spacing specified shall be galvanized structural steel angles (minimum 2-1/2 x 2-1/2 x 1/4-inch).

4. All supporting equipment shall be designed with a minimum safety factor of 5 based on the ultimate tensile strength of the material.

5. Contact between ferrous supports and non-ferrous piping materials shall not be permitted. Supports and clamps shall be rubber coated or copper-plated as necessary to prevent this condition.

6. Adequate supports shall be provided so that there is no movement or visible sagging between supports.

7. Hangers shall permit a minimum of 1-1/2-inch vertical adjustment after installation.

8. Carbon steel, alloy steel, stainless steel and hard-drawn copper pipe shall be supported on maximum intervals as follows:

Pipe Size	Maximum Interval For Steel		Maximum Interval For Copper
	Liquid	Gas	
1/2"	5’	6’	4’
3/4"	6’	7’	5’
1"	7’	9’	6’
1-1/2"	9’	11’	8’
2"	10’	13’	8’

9. Annealed copper tubing, polyethylene tubing, and PVC piping shall be supported on maximum intervals as follows:

Tubing Size	Maximum Interval
3/8" and Smaller	2’
1/2" - 5/8"	3’
3/4" - 1-1/8"	4’
1-1/4" - 2"	5’
2-1/2" - 3-1/2"	6’
4"	7’

10. Where indicated or directed by the Engineer, exposed piping and tubing carrying liquid shall be sloped as necessary to permit complete draining. Pipe deflection between supports shall be considered when determining the slope required to permit complete drainage. All underground piping shall be sloped uniformly for complete drainage.

11. Cast iron or ductile iron piping shall be supported as recommended by the manufacturer, and at all valves and fittings larger than 4-inches in size. At least one support shall be provided per pipe section or at every other joint, whichever is closer. Supports shall be located next to joints.

12. Open ends of pipe columns used for support shall be completely covered with 1/4-inch thick plate or angle leg welded in place.

13. All threaded connections installed loose, such as hanger rods and U-bolts, shall have a double nut installation.

14. Vertical piping shall be supported as shown or required to prevent buckling or swaying utilizing special brackets. Unless otherwise shown, vertical piping shall be supported at the bottom and at each floor. Vertical copper tubing one-inch and smaller in size shall be supported at five foot intervals.

15. Provide a support within 18-inches of each elbow and within 24-inches of each equipment connection.

16. Pipes passing through non-loading bearing walls and partitions shall not bear on building construction. Pipes shall not be supported from roof decking, bar joists or ceiling suspension systems unless approved by the Engineer.

17. Insulation on hot piping (carrying fluids above 70 degrees F) shall be protected at supports and hangers with a 12-inch long galvanized steel protection saddle with welded center support. Protection saddle shall be equal to Grinnell Figure 160 or 161.

18. Insulation on cold piping (carrying fluids at 70 degrees F or below) shall be protected at supports and hangers by galvanized steel insulation shields with a 180 degree contour. Insulation shields shall be equal to Grinnell Figure 167.

19. On insulation finished with an aluminum jacket, a 1/32-inch thick sheet of neoprene shall be provided between the jacket and the shield.

20. Hangers shall be selected to fit around insulation.

21. Following installation all pipe supports shall be field primed and painted with the specified painting system for the application in accordance with the requirements of Section 09900 of these Specifications.

22. Unless otherwise shown, piping shall not be fastened to a support in such a manner than would prevent axial movement due to thermal expansion and contraction.

23. No pipe supports shall be anchored to or supported from floor grating.

24. Unless otherwise noted, piping dimensions shown on the Drawings are for reference only and shall be verified in the field by the Contractor. The Contractor shall size supports and hangers using actual field dimensions.

B. Installation - Horizontal Piping: Provide all necessary steel angles and other items required to maintain the minimum support spacing.

C. Installation - Pipe Supports for Vertical Piping

1. Supports for all pipes shall fit directly around the pipe, except that on insulated pipes, the support shall be insulated and provided with vapor barrier.

2. Vertical pipes passing through floors shall be provided with a riser clamp at each floor. Riser clamps shall have steel lugs, 1/3-inch thick x 2-inches high x 1-1/2-inches long, welded to the clamp arms so that clamp does not come in contact with the pipe sleeve.

D. Insulation Shields - Pipe Insulation Protective Shields and Saddles for Horizontal Piping: Minimum insulation shield requirements unless otherwise noted:

1. Pipes 2-inches and Smaller: 18 gauge x 12-inches long

2. Pipes 2-1/2-inches and Larger: 16 gauge x 12-inches long

3. Shields shall be 180 degree type at all pipe hangers, except that on trapeze hangers, pipe rack and on floor supported horizontal pipes shields shall be 360 degree type. Use foamglass inserts at all shields, hangers, sleeves, etc.

4. Galvanized pipe clamps, including bolts and nuts, shall be provided with the framing channels and shall be used for securing pipes to channels. Pipe clamps on insulated pipes shall fit around pipe, pipe insulation and pipe insulation protection shield.

E. Supplemental Steel

1. All supplemental steel shall be fabricated in accordance with the requirements of the AISC Manual of Steel Construction and the Standard Building Code.

2. No flame cutting of galvanized steel members will be permitted.

3. All galvanized surfaces damaged or exposed by cutting or drilling shall be resurfaced in accordance with ASTM A 780.

3.02 Surface Preparation and Shop Painting

Fabricated pipe supports and accessories, except where shown on the Drawings to be galvanized, shall be cleaned and shop primed in accordance with the requirements of Section 09900 of these Specifications.

3.03 Field Painting

Field painting shall be in accordance with the requirements of Section 09900 of these Specifications.

3.04 Cleaning

Prior to acceptance of the work of this Section, thoroughly clean all installed materials, equipment and related areas in accordance with Section 01710.

END OF SECTION

Part 1 General

1.01 Scope

The work covered by this Section includes furnishing all labor, equipment and materials required to furnish and install pipe couplings and expansion joints, including flanged adapters, expansion couplings, and rubber expansion joints, as shown on the Drawings, specified herein, and/or required for proper installation of piping and equipment.

1.02 Submittals

Complete shop drawings and engineering data shall be submitted to the Engineer in accordance with the requirements of Section 01340 of these Specifications.

1.03 Storage and Protection

Pipe couplings shall be stored and protected in accordance with the requirements of Section 01640 of these Specifications.

1.04 Quality Assurance

The manufacturer shall provide written certification to the Engineer that all equipment furnished complies with all applicable requirements of these Specifications.

Part 2 Products

2.01 Materials and Construction

A. Expansion Couplings

1. Unless otherwise shown or specified, expansion couplings shall be of a gasketed, short sleeve type, with a diameter to properly fit the pipe. Expansion couplings shall have a working pressure of not less than 150 psig.

2. Each short sleeve coupling for joining cast iron or ductile iron pipe shall consist of one cylindrical cast iron middle ring without pipe stop, two high-grade malleable iron or steel followers, two rubber compounds, wedge section gaskets and a sufficient number of track head, electroplated steel bolts to properly compress the gaskets. Cast iron couplings shall be equal to Dresser Style 153 or Rockwell Style 441.

3. Each short sleeve coupling for joining steel pipe shall consist of one cylindrical steel middle ring without pipe stop, two steel follower rings, two rubber compound, wedge section gaskets and a sufficient number of track head, electroplated steel bolts to properly compress the gaskets. Steel couplings shall be equal to Dresser Style 38 or Rockwell Style 411.

4. Where expansion couplings are required for joining cast iron pipe to steel pipe of the same nominal size, steel transition couplings equal to Dresser Style 62 or Rockwell Style 413 shall be used.

5. Rubber gaskets shall be composed of a resilient synthetic rubber compound suitable for use in wastewater containing oil and grease.

B. Flanged Rubber Expansion Joints

1. Flanged rubber expansion joints shall be standard spool-type single or multiple arch expansion joints constructed of abrasion resistant rubber reinforced with high tensile strength synthetic fabric and steel rings.

2. Ends of the expansion joint shall be integral with the body and shall be full faced and drilled per ANSI B16.1 for 125 pound flanges. Beveled and split, galvanized steel retaining rings shall be provided to prevent damage to flanges and to distribute bolting stresses during assembly.

3. Tube, body and flanges shall be constructed using Buna-N for wastewater, natural rubber for clean water and Buna-N or neoprene for air. For working temperatures in excess of 180 degrees F or for chemical service, the tube, body and flanges shall be constructed of Viton. The exterior of the expansion joint shall be coated with Hypalon to resist weathering.

4. When used to convey slurries, raw water or untreated wastewater in horizontal piping, arches shall be filled with a special soft rubber compound integrally cured in the arches.

5. In unrestrained piping systems or pipe systems subject to excessive longitudinal deflection, joints shall be furnished with two plated steel control rods filled with nuts to limit compression and extension and prevent damage to the joint.

6. Rubber expansion joints shall be "Redflex", as manufactured by Red Valve Company, or "Invincible Expansion Joint", as manufactured by Mercer Rubber Company, subject to the requirements of this Section.

2.02 Tools and Spare Parts

The Contractor shall furnish two spare gasket sets and two spare track head bolt sets for each size and type of coupling.

Part 3 Execution

3.01 Installation

A. Pipe couplings and expansion joints shall be installed where shown on the Drawings, required, or directed by the Engineer. Couplings and joints shall be installed in strict conformance with the manufacturer's instructions.

B. Pipe ends shall be cleaned, brushed, or filed to produce a mating surface for the gasket that is free from dirt, rust, chuck marks, mill scores, dents, burrs or other foreign substances that would impede proper gasket seating.

C. A lubricant recommended by the coupling manufacturer shall be used in seating all gaskets.

D. On expansion couplings, bolts shall be tightened diametrically opposite each other and in progression so that the inner rims project an equal distance over the flares of the middle ring at all points. Bolts shall be tightened sufficiently to insure a watertight joint but shall not be tightened beyond the point of stretching.

3.02 Surface Preparation and Shop Painting

A. Couplings and adapters shall have finish as follows:

Material	Location	Primer	Finish
Cast Iron	Buried or Submerged	Asphaltic Varnish Inside and Out	-
Cast Iron	Exposed	Asphaltic Varnish (Interior)	-
Cast Iron	Exposed	Primer (Exterior)	Field Applied
Steel	Buried or Submerged	Epoxy Primer Inside and Out	Coal Tar Epoxy
Steel	Exposed	Primer (Exterior)	Field Applied
Steel	Exposed	Epoxy Primer (Interior)	Coal Tar Epoxy (Interior)

B. Coatings used for couplings and adaptors in potable water shall be approved for use with potable water in accordance with NSF 61.

3.03 Field Painting

Following installation and testing, couplings shall be field painted in accordance with the requirements of Section 09900 of these Specifications. Rubber expansion joints shall not be painted.

3.04 Inspection and Testing

Following installation, operating tests will be performed to demonstrate to the Engineer that the pipe coupling and expansion joints will function in a satisfactory manner. The Contractor shall make, at Contractor's own expense, all necessary changes, modifications and/or adjustments required to ensure satisfactory operation.

3.05 Cleaning

Prior to acceptance of the work of this Section, thoroughly clean all installed materials, equipment and related areas in accordance with Section 01710 of these Specifications.

END OF SECTION

Part 1 General

1.01 Scope

A. Furnish all labor, materials, equipment and incidentals required to complete and make ready for operation, all valves and appurtenances as shown on the Drawings and as specified herein.

B. This Section does not include valves for combustible or flammable liquids or gases.

C. The equipment shall include, but is not limited to, the following:

1. Butterfly Valves (BID ALTERNATE)
2. Plug Valves
3. Check Valve
4. Air Release Valves
5. Vented PVC Ball Valves
6. Pressure Relief Valves
7. Mud Valves
8. Valve Operator Accessories
9. Motorized Actuators

1.02 Submittals

A. Submit to the Engineer, within 30 days after execution of the Contract, a list of materials to be furnished, the names of the suppliers, and the date of delivery of materials to the site.

B. Complete shop drawings of all valves and appurtenances shall be submitted to the Engineer for approval in accordance with Section 01340 of these Specifications. Clearly indicate make, model, location, type, size and pressure rating.

C. Operating and maintenance data for all valves shall be furnished in accordance with Section 01730 of these Specifications.

1.03 Storage and Protection

Valves and all associated accessories shall be stored and protected in accordance with the requirements of Section 01640 of these Specifications.

1.04 Quality Assurance

The manufacturer shall provide written certification to the Engineer that all equipment furnished complies with all applicable requirements of these Specifications.

Part 2 Products

2.01 General

A. Provide valves of same manufacturer throughout where possible.

B. Provide valves with manufacturer's name and pressure rating clearly marked on the outside of the valve body.

C. All exposed bolts, nuts, and washers for buried or submerged valves shall be stainless steel. All exposed nuts, bolts, springs, washers, and miscellaneous hardware shall be zinc plated in accordance with ASTM B 633, Type II unless specified otherwise.

2.02 Shop Painting

A. All exterior ferrous metal surfaces of exposed or submerged valves and appurtenances shall receive a coating of rust-inhibitive primer compatible with the finish paint specified in Section 09900 of these Specifications. The exterior of all buried valves shall have a factory applied, two coat coal tar epoxy coating system. The coal tar epoxy shall be Tnemec Tneme-Tar 46-413, Indurall Ruffstuff 2100 Coal Tar Epoxy or KopCoat Bitumastic No. 300-M. Each coating shall have a dry film thickness of 8-10 mils.

B. All interior ferrous metal surfaces of valves, except for finished or bearing surfaces, and appurtenances shall be provided with two coat, interior epoxy coating conforming to the requirements of AWWA C550 and NSF 61. The coating shall be equal to Tnemec Series 20 Pota Pox, Valspar Series 78 Hi-Build Epoxy, or KopCoat Hi-Gard Epoxy. The coating system shall have a dry film thickness of 4 - 6 mils.

2.03 Butterfly Valves (BFV) -- Bid Alternate

A. Butterfly Valves for Liquid Service

1. Butterfly valves shall be resilient seated, short body design, and shall be designed, manufactured, and tested in accordance with all requirements of AWWA C504 for Class 150B.

2. Valve bodies shall be ductile iron conforming to ASTM A 536, Grade 65-45-12 or ASTM A 126, Grade B cast iron. Shafts shall be ASTM A 276, Type 304 stainless steel, machined and polished. Valve discs shall be ductile iron, ASTM A 536, Grade 65-45-12 or ASTM A 126, Grade B cast iron. The resilient valve seat shall be located either on the valve disc or in the valve body and shall be fully field adjustable and field replaceable.

3. Actuators

   a. Valves shall be equipped with a self-locking type handwheel actuator with extended stem designed, manufactured and tested in accordance with AWWA C504. Actuators shall be capable of holding the disc in any position between full open and full closed without any movement or fluttering of the disc. Actuators shall be furnished with fully adjustable mechanical stop-limiting devices. Actuators that utilize the sides of the actuator housing to limit disc travel are unacceptable. Valve actuators shall be capable of withstanding a minimum of 450 foot pounds of input torque in either the open or closed position without damage.

4. Valves shall be installed with disc shaft vertical. Valves and actuators shall have seals on all shafts and gaskets on valve actuator covers to prevent the entry of water. Actuator mounting brackets shall be totally enclosed and shall have gasket seals.

5. Valve ends shall be mechanical joint type, except where flanged or restrained joint ends are shown. Flange joints shall meet the requirements of ANSI B16.1, Class 125.

6. Butterfly valves shall be manufactured by DeZurik, Pratt, or Val-Matic.

2.04 Plug Valves (PV)

A. Valves shall be 90 degree turn, non-lubricated, eccentric type with resilient faced plugs. Design of the valve shall provide that contact between the seat and the plug shall only occur in the final degrees of plug movement. Valves shall be suitable for throttling service and service where valve operation is infrequent.

B. Valves shall provide drip-tight shut-off up to the full pressure rating with pressure in either direction. Pressure ratings shall be established by hydrostatic tests conducted in accordance with ANSI B16.1. Valves shall be rated at a minimum of 150 psi.

C. Valves shall have a port area equal to at least 80 percent of the full pipe area.

D. Bodies shall be cast-iron, conforming to ASTM A 126, Class B (carbon steel for 2-inch valves).

E. Valve ends shall be a mechanical joint type, except where flanged or restrained joint ends are shown on the Drawings. Mechanical joint valves shall have bell ends conforming to applicable requirements of AWWA C111/ANSI A21.11. Flanged joints shall meet the requirements of ANSI B16.1, Class 125. Flanged valves with flange-to-MJ adapters shall not be acceptable in lieu of MJ valves.

F. Valve seats shall be a raised, welded-in overlay of not less than 90 percent pure nickel, machined to mate with the resilient faced plug. Overlay shall be minimum of 1/8-inch thick.

G. The plug shall be of semi-steel, conforming to ASTM A 126, Class B. The plug facing shall be a synthetic rubber compound of approximately 70 durometer hardness bonded to the plug. Facing material shall be abrasion resistant and suitable for service in sewage and sludge applications.

H. Valves shall be furnished with replaceable, sleeve-type bearings in the upper and lower journals. Bearings shall comply with applicable requirements of AWWA C507. Bearing materials shall have a proven record of service of not less than five years.

I. The valve body shall be fitted with a bolted extended bonnet incorporating a stuffing box and pull-down packing gland. Packing shall be the split chevron type. The shaft seal shall comply with the requirements of AWWA C504.

J. Actuators

1. Actuators for buried service shall be equipped with manual operated geared actuators. Geared actuators shall be totally enclosed, oil lubricated, worm and gear type. Shaft seals shall be provided to prevent entry of dirt and water into the actuator. All shaft bearings shall be permanently lubricated bronze bushings. Actuators shall clearly indicate valve position and an adjustable stop shall be provided to set closing torque. Construction of actuator housing shall be semi-steel. Gear actuators shall comply with requirements of AWWA C504.

2. Gear actuators for buried valves shall be mounted above ground on an extended bonnet.

3. Valves and operators for submerged or buried service shall have seals on all shafts and gaskets on valve operator covers to prevent the entry of water. Operator mounting brackets for submerged service shall be totally enclosed and shall have gasket seals.

K. Operators: Valves shall have a nut type operator and shall be equipped with an extended bonnet and stem extension required to bring the operation nut within 6-inches of finished grade. Valve boxes and extension stems shall be as specified in this Section.

L. Plug valves shall be manufactured by DeZurik, Pratt, or Val-Matic.

2.05 Check Valves (SWCV)

Swing disc check valves shall be constructed of PVC and provided with Viton seals. Valves shall be “All-Plastic Swing Check Valves” as manufactured by Hayward Flow Control Systems.

2.06 Air Release Valves (ARV)

The air release valve shall automatically release air accumulations from the pipeline due to the action of the float. When the air valve body fills with air, the float falls freely from the orifice to allow the air to escape to the atmosphere. When all the air has been exhausted from the valve body, the float will be buoyed up to seat against the

orifice and prevent water from being exhausted from the valve. The valve body and cover shall be constructed of Type 1, Grade 1 PVC. The float shall be constructed of polypropylene. A Viton seat shall be attached to the float for drop-tight closure. The float shall be free floating within the valve body. Valve connection size shall be 1/2" NPT and orifice port shall be 1/8" NPT. Valves shall be Degassing Valve for Continuous Automatic Venting by Plast-O-Matic.

2.07 Vented PVC Ball Valves (BV)

Ball valves shall be non-shock thermoplastic of Type 1, Grade 1 PVC with O-ring stem seal and Teflon ball seat. O-ring seals shall be EPDM or FKM/Viton. Valves shall withstand 150 psi pressure. Valves shall have union connections at each end unless indicated otherwise on the drawings. Valves shall be pre-drilled at the factory for venting. Valves shall be Hayward "Z-ball", NIBCO/Chemtrol 45TB-V-BBV Series, or Spears "True Union 2000 Industrial".

2.08 Pressure Relief Valves (PRV)

Pressure relief valves shall be non-shock thermoplastic of Type 1, Grade 1 PVC with a flow through angle-pattern design. Valves shall have an integrally molded 1/4" NPT gauge port and Viton seals. Valves shall be able to relieve pressures from 5 to 75 psig and shall be hand adjustable. Valves shall be manufactured by Hayward.

2.09 Mud Valves (MV)

A. Mud valves shall be heavy duty flange type with rising stem as shown on the Drawings. Valve frame, plug, yoke and extension stem connector shall be cast iron conforming to ASTM B 126, Class 30. Valve operating stem, lift nut, and seat shall be bronze.

B. The valve flange shall conform to ANSI/ASME B16.1, Class 125.

C. The valve shall be Clow F-3075 or Troy A-25600.

2.10 Valve Operator Accessories

Extension Stems: Extension stem shall be PVC and shall be furnished by the manufacturer of the associated valve to bring the operating nut to within 6-inches of the top of the handrail and as shown on the Drawings. Extension stems shall be sized by the valve manufacturer to withstand the maximum valve operator output.

2.11 Motorized Actuators

A. Type II, Medium Duty, Open/Close or Modulating

1. Actuator shall be a reversible electric motor driven gear reducer with integral controls for motorized operation of small diameter, non-rising stem, quarter-turn PVC ball valves and butterfly valves. The actuator shall be provided and sized by the valve manufacturer to meet the maximum torque and control requirements of the valve.

2. The actuator shall operate the valve from full open to full closed in 2-1/2 seconds.

3. The actuator shall operate on a 120 VAC power supply.

4. The actuators and controls shall be rated for washdown service.

5. The actuator shall have the following options:

   a. Two limit switches

   b. Feedback potentiometer

   c. Heater and thermostat

   d. Manual override

   e. Adjustable 5 second - 14 minute cycle length control

   f. Mechanical brake

   g. 4-20 mA positioner for modulating control

   h. Position indicator

6. The actuators shall be Hayward Industries Series EPM, Flowserve/Limitorque LY Series or EIM Controls P Series.

Part 3 Execution

3.01 Installation

A. All valves and appurtenances shall be installed in the locations shown on the Drawings, true to alignment and properly supported. Any damage to the above items shall be repaired to the satisfaction of the Engineer before they are installed.

B. Install all floor boxes, brackets, extension rods, guides, the various types of operators and appurtenances as shown on the Drawings that are in masonry floors or walls, and install concrete inserts for hangers and supports as soon as forms are erected and before concrete is poured. Before setting these items, the Contractor shall check all plans and figures which have a direct bearing on their location and he shall be responsible for the proper location of these valves and appurtenances during the construction of the structure.

3.02 Field Painting

All exposed, non-buried or submerged valves and appurtenances specified herein shall be painted as part of the work in Section 09900 of these Specifications. Plastic valves shall be exempt from painting.

3.03 Inspection and Testing

Following installation, operating tests will be performed to demonstrate to the Engineer that all equipment and accessories will function in a satisfactory manner. The Contractor shall make, at Contractor's own expense, all necessary changes, modifications and/or adjustments required to ensure satisfactory operation.

3.04 Cleaning

Prior to acceptance of the work of this Section, thoroughly clean all installed materials, equipment and related areas in accordance with Section 01710 of these Specifications.

TABLE 1
MOTORIZED VALVE ACTUATOR SCHEDULE

Equipment Number	SHCLR-MOV-1,2,3,4	SHCLR-MOV-5,6
Valve Type	Vented Ball Valve	Vented Ball Valve
Size, inches	3	3
Type of Operation	O/C	M
Pressure (psi)	150	150
Maximum Differential Open/Close Time, seconds	12	12
Electrical Maximum Voltage/Phase	120/1	120/1
Input Supply for Modulating Valve	NA	125V
Signal Enclosure Rating	NEMA 4X	NEMA 4X
Control Location	Bulk Hypochlorite Storage Room	Bulk Hypochlorite Feed Room

Type of Operation:

M	Modulating
O/C	Open/Close
L	Local
R	Remote
L&R	Local and Remote

END OF SECTION

Part 1 General

1.01 Scope

A. Work specified in this Section is subject to the provisions of Section 15050.

B. Furnish, install, and test process piping specialties as indicated in the Contract Documents.

1.02 References

A. The following is a list of standards which may be referenced in this Section:

1. American National Standards Institute (ANSI):

   a. B16.1, Cast Iron Pipe Flanges and Flanged Fittings.

   b. B16.5, Pipe Flanges and Flanged Fittings.

2. American Society for Testing and Materials (ASTM):

   a. A153, Standard Specification for Zinc Coating (Hot-Dip) on Iron and Steel Hardware.

   b. A276, Standard Specification for Stainless and Heat-Resisting Steel Bars and Shapes.

3. American Water Works Association (AWWA): C213, Fusion-Bonded Epoxy Coating for the Interior and Exterior of Steel Water Pipelines.

4. National Fire Protection Association (NFPA): 24, Standard for the Installation of Private Fire Service Mains and Their Appurtenances.

1.03 Submittals

A. Submit shop drawings and engineering data in accordance with Section 01300 of these Specifications.

B. Submit manufacturer's installation instructions.

Part 2 Products

2.01 General

Provide required piping specialty items, whether shown or not shown on the Drawings, as required by applicable codes and standard industry practice.

2.02 Connectors

A. Quick Connect Couplings

1. Type: Twin cam arm actuated, male and female, locking, for loading and transfer.

2. Materials: Glass-filled polypropylene or PVDF with Viton-A gaskets as recommended for the service by the manufacturer.

3. End Connections: NPT threaded or flanged to match piping connections. Hose shank for chemical installations.

4. Plugs and Caps: Female dust cap for each male end; male dust plug for each female end.

5. Pressure Rating: 125 psi minimum at 80 degrees F.

6. Manufacturers and Products:

   a. OPW Kamlock.

   b. Ryan Herco: 1300 Series.

Part 3 Execution

3.01 General

A. Provide accessibility to piping specialties for control and maintenance.

B. Install in accordance with manufacturer’s written instructions.

END OF SECTION

Part 1 General

1.01 Scope

A. Work specified in this Section is subject to the provisions of Section 15050.

B. Furnish, install, disinfect and test the water supply system as indicated on the Contract Documents.

1.02 References

A. This Specification references the latest edition of the publications listed below. Work shall be performed and materials shall be furnished in accordance with these publications as referenced herein:

1. Standard Plumbing Code

2. American National Standards Institute (ANSI)

   A112.1.2 Air Gap Standards

   B16.18 Cast Copper Alloy Solder-Joint Pressure Fittings

   B16.22 Wrought Copper and Copper Alloy Solder Joint Pressure Fittings

   B16.26 Cast Copper Alloy Fittings for Flared Copper Tubes

3. American Society of Sanitary Engineering (ASSE)

   1003 Water Pressure Regulators and Reducing Valves for Domestic Water Supply Systems

   1012 Backflow Preventers with Intermediate Atmospheric Vent

   1013 Backflow Preventers, Reduced Pressure Principle

   1015 Backflow Preventers, Double Check Valve Assembly

4. American Society for Testing and Material (ASTM)

   B 88 Seamless Copper Water Tube

   D 1785 Polyvinyl chloride (PVC) Plastic Pipe and Fittings, Schedules 40, 80 and 120

   D 2466 Polyvinyl chloride (PVC) Plastic Pipe Fittings, Schedule 40

   D 2467 Socket Type Polyvinyl chloride (PVC) Plastic Pipe Fittings, Schedule 80

D 2564 Solvent Cements for Polyvinyl chloride PVC Plastic Pipe and Fittings

5. American Water Works Association (AWWA)

C110 Gray-iron and Ductile-Iron Fittings, 3-inch through 48-inch for Water and other Liquids

C111 Rubber-Gasket Joints for Ductile-Iron and Gray-Iron Pressure Pipe Fittings

C151 Ductile-Iron Pipe, Centrifugally Cast in Metal Molds or Sand-Lined Molds, for Water or Other Liquids

C506 Backflow Prevention Devices-Reduced Pressure Principle and Double Check Valve Types

C510 Standard for Double Check Valve Backflow Prevention Assembly

C511 Standard for Reduced Pressure Principle Backflow Prevention Assembly

C651 Standard for Disinfecting Water Mains

M14 Recommended Practice for Backflow Prevention and Cross-Connection Control

6. Foundation of Cross-Connection Control and Hydraulic Research (FCCC-HR), University of Southern California - Section 10 Manual of Cross-Connection Control

7. Plumbing and Drainage Institute (P&DI)

WH-201 Certification, Sizing, Placement of Water Hammer Arrestors.

1.03 Submittals

A. Submit product data in accordance with Sections 01340 and 15050.

B. Submit product data on all products proposed for installation under this Section, including but not limited to the following:

1. Pipe and fittings.

2. Valves.

3. Thermostatic Mixing Valves.

4. Turbine meters.

5. Water hammer arresters.

C. Submit installation and maintenance instructions and spare parts lists in accordance with Sections 01730 and 15050.

1.04 Quality Assurance

A. Work shall be performed by workers skilled in the installation of domestic water systems.

B. Installation, disinfection and testing shall be supervised by a master plumber licensed in the State of Georgia who shall be responsible for the installation of the entire system in accordance with the Standard Plumbing Code.

Part 2 Products

2.01 Pipe and Fittings (Below Ground)

A. Ductile Iron, Cement-Mortar Lined Piping

1. Pipe: AWWA C151 with mechanical or push-on joints conforming to AWWA C111.

2. Fittings: AWWA C110, not less than Class 150, with mechanical joints.

B. Copper Tubing

1. Tube: ASTM B 88, Type K, hard drawn unless noted otherwise.

2. Fittings: Either flared cast bronze, solder-wrought copper or bronze; ANSI B16.22 and B16.26, except that unions shall be either brass or bronze and either threaded or soldered.

2.02 Pipe and Fittings (Above Ground)

A. Copper Tubing

1. ASTM B 88, Type L, hard drawn unless noted otherwise.

2. Fittings: Solder type, either cast bronze conforming to ANSI B16.18 or wrought copper or bronze conforming to ANSI B16.22, except that unions shall conform to FS WW-U-516 and be either brass or bronze and either threaded or soldered.

B. PVC Piping

[] 1. Schedule [40] [80], ASTM D 1785.

2. Fittings: Solvent weld socket type, same schedule as piping, ASTM D 2466 or D 2467.

3. Solvent Cement: ASTM D 2564.

2.03 Valves

A. Smaller than 3-inches shall be threaded or soldered, 3-inches and larger shall be flanged.

B. Gate Valves

1. Smaller than 3-inches shall be Class 125, Type III, rated for a hydraulic working pressure of 125 psi.

2. 3-inches and larger shall be Class 125, Type II, outside-screw-and yoke type; rated for a hydraulic working pressure of 125 psi.

C. Check Valves

1. Smaller than 3-inches shall have bronze trim and either cast iron or steel body, and be rated for a hydraulic working pressure of 125 psi.

2. 3-inches and larger shall be weight-loaded, have bronze trim and either cast iron or steel body and be rated for a hydraulic working pressure of 125 psi.

a. Buried Lines: Mechanical joints.

b. In Valve Chambers, Valve Pits and Above Ground: Flanged joints.

D. Ball Valves

1. Smaller than 3-inches shall be bronze body with full port, rated for a hydraulic working pressure of 150 psi.

2. 3-inches and larger shall be carbon steel or stainless steel body, stainless steel trim with full port, rated for a hydraulic working pressure of 150 psi.

E. Globe Valves

1. Globe valves 2-inches and smaller shall be bronze body with rising stem, screwed bonnet, integral bronze seat, renewable PTFE discs with screwed or solder joint ends. Valve shall be rated for a non-shock cold working pressure of 300 psi.

2. Globe valves 2-1/2-inches and larger shall be iron body, Class 125, flanged ends with bolted bonnet and non-rising stem. Valves shall be rated for a hydraulic working pressure of 150 psi.

F. Acceptable Manufacturers: Crane, Nibco, Stockham, Milwaukee, Watts, Apollo, Kitz.

2.04 Thermostatic Mixing Valve

A. Thermostatic mixing valve shall conform to the requirements of ASSE Standard 1016 for hot water temperature control.

B. Valve shall have a bronze or brass body and shall include integral check valves and an adjustment cap with locking feature.

C. The valve shall be provided with union connections.

D. Valve shall be Watts Series MMV or equal by Simmons, PPP Inc. or Leonard.

2.05 Water Hammer Arresters

A. Permanently packaged water hammer arrester with bellows, diaphragm or O-ring/disc sealing mechanism.

B. Provide in accordance with PDI Standard WH-201.

C. Acceptable Manufacturers: Sioux Chief Hydra-Rester, Zurn, Josam.

2.06 Turbine Meter

A. Type: Turbine flow meter with AWWA Class II turbine conforming to the latest performance and accuracy specifications of AWWA C701. Unit shall meet the requirements of ANSI/NSF 61 and shall have integral, direct reading register with units of U.S. gallons.

B. Body: Bronze body, construction with 150-pound ANSI flange drilling.

C. Internals: Combined turbine and disc measuring elements utilizing stainless steel shafts, tungsten carbide bearings, synthetic polymer rotor and magnetic drive. All additional wetted parts shall be stainless steel.

D. Accuracy: +/-1.5% of full scale.

E. Acceptable manufacturer: Neptune TRU/FLO or Badger Meter Recordall.

2.07 Piping Accessories

A. Nipples: FS WW-N-351; be of same type material as piping on which installed.

B. Unions for Copper Tubing: Brass or bronze, have either threaded or solder joint ends and conform to FS WW-U-516.

C. Unions for Steel Piping: FS WW-U-531.

D. Escutcheons: Polished chromium-plated pressed steel, split-hinged, locking type held in-place by either an internal tension spring or a set-screw; encompass sleeve or opening.

E. Bolts and Nuts: Machined brass, stainless steel or galvanized carbon steel, and not smaller than 1/4-inch; bolts shall have hexagonal heads and nuts shall be hexagonal.

F. Solder for Solder-Jointed Tubing: 95 percent tin and five percent antimony. Flux shall be non-corrosive type conforming to NSF 61.

G. Strainers

1. Strainers in water lines shall have standard pattern, stainless steel baskets with standard perforations. Bodies shall be bronze for sizes 2-inch and smaller and cast iron for sizes 2-1/2-inch and larger. Strainers shall be equal to Watts Series 77 unless otherwise specified in other Sections of Division 15.

2. All strainers shall be of the same size as the piping in which they are installed. Provide dielectric union, if necessary, to isolate strainer from pipe material.

Part 3 Execution

3.01 Installation

A. Install domestic water systems in accordance with AWWA standards and local codes applicable to water system installation.

B. Cut pipe and tubing accurately to measurements established at worksite; work pipe into place without springing and forcing. Install pipe with a fall towards either shut-off valve or lowest fixture.

C. Remove fins and burrs from piping. Apply lubricant to male threads only; threads shall be full cut, and not more than three threads on pipe shall remain exposed after tightening. Coat installed and tested exposed ferrous threads with one coat of non-toxic primer and oil paint.

D. Cut ends of copper tubing square, and remove burrs. Clean ends of tubing and apply a rosin type flux to outside surface of tubing ends and on recess inside of fittings. Insert tubing to full depth of fitting; then solder-joints before soldering valves.

E. Install piping true to line and grade and support and guide in a manner which will ensure indicated alignment. Installed piping shall clear obstructions, preserve headroom, keep openings and passageways clear, and not be in same trenches as sewer lines. Water supply system drawings are schematic; do not scale. Install unions on pipe ends immediately adjacent to valves, equipment and tanks.

F. Valves shall be accessible for operation and servicing. Stems of installed valves shall not be below horizontal position. Valves which will be in furred spaces shall be accessible.

G. Make-up soldered-to-threaded connections with male thread-to-solder adapters.

H. After pipes have been installed, either cap or plug ends of pipes. Neither bury, furr-in, nor conceal piping before piping has been inspected and tested.

I. Provide access panels in finished walls for access to concealed valves, water hammer arrestors and other devices requiring periodic maintenance.

J. Install insulation in accordance with Section 15250 of these Specifications.

K. Dielectric Isolation

1. Wherever copper, brass or bronze piping systems are connected to steel or iron piping systems, this connection shall be made with dielectric isolators. The dielectric isolators shall be so designed that non-ferrous piping materials shall be isolated by the use of Teflon or nylon isolating materials made up in the form of screwed type unions or insulating gaskets and bolt sleeves and washers for standard flanged connection. All dielectric isolators shall be selected for the pressure of the system involved.

2. Dielectric isolators shall be Watts, Epco, Crane or Maloney.

3.02 Testing

A. Test installed building water supply system in accordance with the Standard Plumbing Code.

B. Test piping that will be buried and concealed prior to concealment.

3.03 Disinfecting

A. Disinfect water systems in accordance with AWWA C651 and local codes applicable to water system disinfecting.

B. Before disinfecting system, flush line in a manner which will remove all extraneous materials.

C. Disinfect each section of new line before seeking acceptance of water supply system.

D. Either directly apply chlorine or mix water and either calcium hypochlorite, chlorine gas, or calcium chloride. Retain solution in pipe for not less than 24 hours, then measure residual chlorine at ends of section and at other representative points; residual chlorine content is similar to that obtained from source.

END OF SECTION

Part 1 General

1.01 Scope

A. Work specified in this Section is subject to the provisions of Section 15050.

B. Furnish, install and test the sanitary sewer system as indicated on the Contract Documents. Do not scale Drawings.

1.02 References

A. This Specification references the latest edition of the publications listed below. Work shall be performed and materials shall be furnished in accordance with these publications as referenced herein:

1. Standard Plumbing Code

2. American National Standards Institute (ANSI)

B16.1	Cast Iron Pipe Flanges and Flanged Fittings Class 25,125, 250 and 800
B16.12	Cast Iron Threaded Drainage Fittings
B16.23	Cast Copper Alloy Solder Joint Drainage Fittings-DWV

3. American Society for Testing and Materials (ASTM)

A 48	Gray Iron Castings
A 74	Cast Iron Soil Pipe and Fittings
A 395	Ferritic Ductile Iron Pressure-Retaining Castings for Use at Elevated Temperatures
A 888	Hubless Cast Iron Soil Pipe and Fittings
B 306	Copper Drainage Tube-DWV
C 564	Rubber Gaskets for Cast Iron Soil Pipe and Fittings
D 2146	Polypropylene Molding and Extrusion Materials
D 2665 or F 441	Chlorinated Polyvinyl Chloride (CPVC) Plastic Pipe, Schedules 40 and 80
D 2665 or F 439	Fittings: Solvent Weld Socket Type, Same Schedule as Piping

F 493 Solvent Cement

4. American Water Works Association (AWWA)

C110 Gray-Iron and Ductile-Iron Fittings, 3-inches through 48-inches, for Water and other Liquids

C112 2-inch and 2-1/2-inch Cast Iron Pipe, Centrifugally Cast, for Water or other Liquids

C302 Reinforced-Concrete Water Pipe - Noncylinder Type, Not Prestressed

5. Cast Iron Soil Pipe Institute (CISPI)

301 Hubless Cast Iron Soil Pipe and Fittings for Sanitary and Storm Drain, Waste, and Vent Piping Applications

6. Federal Specifications (FS)

WW-P-421D Pipe, Cast Gray and Ductile Iron, Pressure (For Water and Other Liquids)

WW-P-541E Plumbing Fixtures (General Specification)

7. National Bureau of Standards (NBS)

Handbook H28

8. Underwriters Laboratories, Inc. (UL) Standards

UL 58Steel Underground Tanks for Flammable and Combustible Liquids

UL 971 Listed Non-Metal Pipe

UL 1316 Glass Fiber-Reinforced Plastic Underground Storage Tanks for Petroleum Products

1.03 Submittals

A. Submit product data in accordance with Sections 01340 and 15050.

B. Submit product data on all products proposed for installation under this Section, including but not limited to the following:

1. Pipe and fittings.

2. Drains.

3. Cleanouts.

C. Submit installation and maintenance instructions and spare parts lists.

1.04 Quality Assurance

A. Work shall be performed by workers skilled in the installation of sanitary drainage systems.

B. Installation and testing shall be supervised by a licensed master plumber licensed in the State of Georgia who shall be responsible for the installation of the entire system in accordance with the Standard Plumbing Code.

C. Installation tools and equipment shall not damage products.

1.05 Jobsite Conditions

Coordinate installation with other building systems in a manner which will preclude interferences.

Part 2 Products

2.01 Polyvinyl Chloride (PVC) DWV PIPE

A. PVC Pipe and Fittings, 2 to 8-inch diameter, concealed or buried:

1. Pipe in accordance with ASTM D 2665.

2. Fittings: Solvent weld socket type, DWV pattern, same schedule as piping, in accordance with ASTM F 1866.

3. Solvent Cement: ASTM D 2564.

2.02 Drains

A. Floor Drain (FD-3)

1. Provide drain with polyvinyl chloride (PVC) body and flange with a 9-inch diameter PVC strainer, PVC sediment bucket and trap primer tap. Locate drain where shown on the Drawings.

2. Floor drain shall be equal to Josam Model JPFD-3200 Series.

B. Trench Drain (TD-_____)

1. Trench drain shall include modular, presloped, stay-in-place, fiberglass form segments; catch basin; angle frame system with anchors; removable spacers; cast iron grate and solid steel checker plate cover in the dimensions shown on the Drawings.

2. Support frame shall be fabricated in sections with a 2-inch drop to accept a solid cover and grate as specified herein. Angle frame system shall be provided with pavement anchor hugs.

3. Grates shall be 1-1/2-inch thick, heavy duty casting with slots running width-wise.

4. Solid covers shall be 1/4-inch thick and have a checkered finish with pick holes for removal.

5. Trench drains shall be Aquaduct/Composite Concepts, Inc., ACO Trench, Polydrain, or Polycast/Quartzite.

2.03 Cleanouts

A. Cleanout bodies shall be cast iron conforming to ASTM A 74.

B. Floor Cleanouts (FCO): Adjustable, with bronze tapped plug, scoriated nickel-bronze cover and, if for membraned floors, a clamping device.

C. Wall Cleanouts (WCO): Bronze tapped plug, cover shall be polished stainless steel, in flanged frame secured to plug with vandal-proof screw.

D. Exposed Cleanouts: Have tapered caulking ferrule and raised brass head cleanout plug.

E. Exterior Cleanouts (ECO): Have adjustable sleeve-type housing, countersunk threaded brass plug and cast iron frame and cover.

F. Cleanout plugs shall not be larger than 4-inches. Cleanouts for cast iron soil pipe shall consists of a longsweep 1/4 bend or one or two 1/8 bends extended to the place indicated; other cleanouts shall be T-pattern, 90-degree branch drainage fittings having screw plugs.

G. Cleanouts shall be manufactured by Josam, Smith, Wade, Zurn, or Ancon.

2.04 Piping Specialties

Solder for Solder-Jointed Tubing: 95 percent tin and five percent antimony; flux shall be non-corrosive.

Part 3 Execution

3.01 Installation

A. Horizontal soil and waste pipe grades shall not be less than 1/4-inch per foot for 2-1/2-inch size and smaller, and not be less than 1/8-inch per foot for 3-inch size and larger.

B. Changes of soil, waste, and drain pipe sizes shall be made with reducing fittings. Changes in direction shall be with either 45 degree wyes; long or short-sweep 1/4, 1/6, 1/8, or 1/16 bends; or elbows.

C. Install and connect products in accordance with product manufacturer's printed installation instructions. Apply joint compound to threaded joints and tighten joints to a degree which will prevent leaks.

D. Interior of pipe, pipe fittings, drains and cleanouts shall be clean before being installed and foreign substances on interior surfaces shall have been removed.

E. Cut ends of copper tube square and remove burrs. Clean outside of tube, where tube engages fittings and inside of fitting contacting tube, with an abrasive material before soldering. Tube and fittings shall not be annealed when making connections. Core solder will not be permitted. Apply heat uniformly around tube and fitting joints in copper tube 2-1/2-inches and larger; use multiflame torch.

F. Set pipe and fittings to line and grade before making-up joints

G. Secure products not to be buried to hangers, supports and anchors. Tighten bolts and nuts of flanged joints to a degree which will prevent leaks.

H. Seal open ends of products at end of work period and in a manner which will prevent water and foreign material from entering; remove seals when work resumes.

I. Solvent-Welded PVC Joints: All solvent-welded PVC joints shall be installed in accordance with ASTM 2855.

3.02 Floor Drain Installation

A. Coordinate floor drain locations and installation elevations with the Structural and Architectural Drawings.

B. Install floor drains at the local low point in the floor slab.

C. Install floor drains with membrane clamping rings if the floor slab contains a membrane.

D. Protect the floor drain during the floor slab pour to prevent extraneous material from entering the drain or waste piping. Cover during the remainder of the construction to prevent blockage with construction debris.

3.03 Inspection and Testing

A. Test installed sanitary drainage and building sewer systems with water and air in accordance with the Standard Plumbing Code.

B. If system exhibits leaks, repair leaks and retest system until system exhibits no leaks.

C. Test piping that will be buried and concealed prior to concealment.

3.04 Cleaning

A. Remove foreign material from product surfaces, but do not remove manufacturers' labels until Project has been accepted by the Owner, then remove labels.

B. Repair pipe coating that may have been damaged during pipe installation.

END OF SECTION

Part 1 General

1.01 Scope

A. Work specified in this Section is subject to the provisions of Section 15050.

B. Furnish and install plumbing equipment of the type specified below and scheduled on the Drawings.

1.02 References

A. The latest edition of the publications listed below is included as part of these Contract Documents:

1. Standard Plumbing Code
2. ANSI/ASME Section 8D - Pressure Vessels
3. ANSI/NFPA 70 - National Electrical Code
4. ANSI/UL 1453 - Electric Booster and Commercial Storage Tank Water Heaters
5. Underwriters Laboratories, Inc. (UL) - UL Listing and Label

1.03 Submittals

A. Submit shop drawings and product data under provisions of Sections 01340 and 15050.

B. Include dimension drawings of water heaters indicating components and connections to other equipment and piping.

C. Include dimensions of tanks, tank lining methods, anchors, attachments, lifting points, tappings and drains.

D. Submit manufacturer's installation instructions under provisions of Sections 01340 and 15050.

E. Submit manufacturer's certificate that pressure vessels meet or exceed specified requirements.

F. Include operation, maintenance and inspection data, replacement part numbers and availability, and service depot location and telephone number.

G. Submit pump curves, dimensional diagrams and wiring diagrams for pressure booster systems.

1.04 Quality Assurance

A. Ensure products and installation of specified products are in conformance with recommendations and requirements of the following organizations:

1. American Society of Mechanical Engineers (ASME)

2. National Board of Boiler and Pressure Vessel Inspectors (NBBPVI)

3. National Electrical Manufacturers' Association (NEMA)

4. Underwriters Laboratories (UL)

B. Ensure pumps operate at specified system fluid temperatures without vapor binding and cavitation, are non-overloading in parallel or individual operation, operate within 25 percent of midpoint of published maximum efficiency curve.

1.05 Delivery, Storage and Handling

A. Deliver products to site in undamaged condition by means consistent with the materials provided.

B. Store and protect products from damage until installed on the job.

C. Provide temporary protection caps on all piping connection nozzles. Maintain caps in place until installation of piping.

1.06 Warranty

A. Warranties shall include complete coverage of labor and material charges for repair of covered equipment and shall be in accordance with Section 01740 except as described herein.

B. Provide five year manufacturer's warranty for coverage of domestic water heaters and pumps.

Part 2 Products

2.01 Instantaneous Electric Water Heaters

A. Factory assembled and wired, instantaneous electric water heater, flow activated, self-cleaning.

B. The unit shall have high temperature shut-off.

C. The unit shall meet UL and other applicable codes.

D. Supply flow controls to faucets, if needed.

E. Water heater shall be manufactured by Chronomite, or PVI.

Part 3 Execution

3.01 Water Heater Installation

A. Install water heaters in accordance with manufacturer's instructions and to UL requirements.

B. Coordinate with plumbing piping and related electrical work to achieve operating system.

3.02 Demonstration

A. Adjust water temperature setpoint to setting desired by the Owner.

B. Demonstrate proper operation of the water heaters to maintain the setpoint temperature, including all safety devices, prior to acceptance.

END OF SECTION

Part 1 General

1.01 Scope

A. All work specified in this Section is subject to the provisions of Section 15050.

B. Furnish and install electric heaters of the type and capacity scheduled in the Contract Documents.

1.02 Submittals

A. Submit product data in accordance with the provisions of Sections 01340 and 15050.

B. Submit product data on all products proposed for installation under this Section, including but not limited to the following: unit heaters.

C. Submittal data shall include catalog cuts and other information required to evaluate conformance with these Specification requirements. Data submitted shall include at least the following:

1. Materials of construction.
2. Heating capacity.
3. Electrical requirements.
4. Accessory items.
5. Installation and maintenance instructions.
6. Disconnects.

1.03 Coordination

Electric heaters of a specific manufacturer have been used as the basis of design. Any modifications to controls, electrical connections, structural supports, etc., that result from the use of equipment by any other manufacturer shall be coordinated with all other trades; this coordination shall occur before delivery of the equipment from the manufacturer. Any modifications shall be performed without incurring additions to the Contract.

Part 2 Products

2.01 Unit Heaters

A. Unit heaters shall have steel housing, adjustable horizontal louvers, propeller-type fan resilient-mounted, motor with built-in automatic reset thermal overload protection, 3-pole heavy duty contactor, thermostat and 24 volt control power transformer.

B. Heating elements shall be steel and monel spiral finned, with fins copper brazed to sheath.

[] C. Each unit heater shall be provided with [an integral] [wall mounted] thermostat set at 70 degrees F (adjustable 40 - 100 degrees F). Thermostats shall be as specified in Section 15950.

D. Provide [wall] [ceiling] mounting brackets for secure mounting of unit.

E. Acceptable Manufacturers: Chromalox/Q-Mark MUH Series, Berko, or Markel.

Part 3 Execution

3.01 Installation

A. Electric heaters shall be installed in complete conformance with the manufacturer's recommendations and the Contract Documents.

B. Coordinate electrical construction with heater installation.

C. Mount wall mounting brackets rigidly to building structure with amply sized anchor bolts or machine bolts.

D. Touch up any epoxy painted surfaces damaged during installation with paint materials recommended by the heater manufacturer.

3.02 Demonstration

A. Test operating controls for proper heater operation to maintain temperature setpoint conditions.

B. Verify proper operation of all safety controls.

C. Adjust discharge louvers for even air distribution in the heated space.

END OF SECTION

Part 1 General

1.01 Scope

A. Work specified in this Section is subject to the provisions of Section 15050.

B. Furnish and install unitary fans of the size, type, capacity and characteristics described within the Contract Documents.

1.02 References

A. This Specification references the latest edition of the publications listed below. Work shall be performed and materials shall be furnished in accordance with these publications as referenced herein.

1. Standard Mechanical Code

2. Underwriter's Laboratories (UL) Standards

UL 705	Power Ventilators

3. National Fire Protection Association (NFPA) Standards

NFPA 70	National Electrical Code
NFPA 90A	Installation of Air Conditioning and Ventilating Systems

4. Air Movement and Control Association (AMCA) Standards

AMCA 99	Standards Handbook
AMCA 210	Laboratory Methods of Testing Fans for Rating Purposes
AMCA 300	Test Code for Sound Rating Air Moving Devices

5. American Society for Testing and Materials (ASTM) Standards

D 4167	Standard Specification for Fiber-Reinforced Plastic Fans and Blowers

1.03 Submittals

A. Submit product data in accordance with the provisions of Sections 01340 and 15050.

B. Submit product data on all products proposed for installation under this Section.

C. Submittal data shall include catalog cuts, performance curves and other information required to evaluate conformance with these Specification requirements. Data submitted shall include at least the following:

1. Materials of construction.

2. Fan performance data and AMCA certification.

3. Fan motor, horsepower, starters, electrical data and/or disconnects where specified or shown.

4. Fan accessories.

5. Installation and maintenance instructions.

6. Spare parts lists.

?[] 7. Disconnect switches [where specified herein].

D. Motors shall meet the requirements of Section 16150.

E. Disconnects shall meet the requirements of Section 16440.

F. Starters shall meet the requirements of Section 16050.

1.04 Quality Assurance

A. Provide factory built and tested fan equipment. Test fans in accordance with AMCA 210 and 300. Fans shall bear the AMCA Certified Performance Seal for both air and sound performance.

B. Provide factory balanced fan wheel and shaft assemblies. Provide statically and dynamically balanced fan assemblies. Imbalance shall not exceed limitations of the fan bearings for maximum rated design life.

C. Belt drives shall be designed for not less than 150 percent of the connected driving capacity. Motor sheave shall be adjustable to provide not less than 20 percent speed variation. Sheaves shall be selected to drive the fan at a speed to produce the scheduled capacity when set in the approximate midpoint of the sheave adjustment. Motors with V-belt drives shall be provided with adjustable bases.

D. Units shall be rigidly constructed of materials suitable for the intended service and shall be installed with accessories listed on the Contract Documents.

E. Fans shall bear the Underwriter's Laboratories label.

Part 2 Products

2.01 FRP Wall-Mounted Propeller Fans

A. Provide direct drive sidewall propeller fan. The fan shall be packaged, completely assembled, and ready to install.

B. The fan housing with outlet fan orifice shall be a one-piece design deep box, flanged on the intake end, with motor base plate and vertical base supports all of solid fiberglass and resin. The fiberglass propeller shall be a die formed airfoil design of cloth mat and woven roving using vinyl ester resin with 3% antimony oxide added to achieve a Class I flame spread rate of below 25 per ASTM E84 tunnel test standard. Fan construction shall conform to ASTM Standard D4167 for fiber reinforced plastic fans and blowers. The propeller hub shall have an aluminum casting insert for secure attachment to the shaft.

C. The motor shall be a totally enclosed air over type. The motor shall have Class F insulation and shall be rated for operation in ambient temperatures up to 104o F.

D. All mounting hardware shall be Type 304 stainless steel.

E. The fan assembly shall be dynamically balanced at the factory prior to shipping. Fans shall be balanced in accordance with AMCA Standard 204-96, fan application category BV-3 (comparable to Grade G6.3). Fans shall be manufactured in accordance with standard quality assurance procedures. Fan performance shall be based on tests conducted in an AMCA accredited test laboratory in accordance with AMCA Standard 210 for air performance and AMCA Standard 300 for sound. Fans shall be licensed to bear the AMCA Certified Air Performance Rating Seal.

F. Accessories

1. Mounting Flange - Fiberglass, bonded to the orifice end of the unit with same face drilling as inlet flange box. (Customer to specify location.)

2. Alternative Resins - Dow Derakane 510-A vinylester, brush coating of Reichhold Dion 6694.

3. Motors - Chemical plant duty type with higher insulation class for temperatures to 180° F.

4. Guards - Inlet and outlet guards, OSHA approved.

5. Electrical Grounding - Interior airstream surfaces can be coated with a “carbon rich" resin coat and grounding straps secured from the side of the housing to the fan motor. All that remains to effectively ground the airstream is to ground the fan motor at the time of installation.

6. Boot - Fiberglass boot for mounting a shutter with a panel fan.

7. Shutter - Fiberglass end pivoted damper.

G. Acceptable Manufacturers: Hartzell Fan, M.K. Plastics, or Plasticair.

Part 3 Execution

3.01 Installation

A. All units shall be installed in accordance with manufacturer's recommendations and as shown on the Drawings. Provide adequate supports from wall or structure to prevent sagging, vibration and damage.

[] B. Units shall be interlocked and controlled as shown on the Drawings and as described in Section [15950] of these Specifications.

3.02 Demonstration

Verify proper rotation of fan wheel.

END OF SECTION

Part 1 General

1.01 Scope

A. Work specified in this Section is subject to the provisions of Section 15050.

B. Furnish and install air outlets and inlets of the size, type, capacity, and characteristics described within the Contract Documents.

1.02 References

A. This Specification references the latest edition of the publications listed below. Work shall be performed and materials shall be furnished in accordance with these publications as referenced herein:

1. Sheet Metal and Air Conditioning Contractor's National Association (SMACNA) Standards

   HVAC Duct Construction Standards

2. American Society of Heating, Refrigerating and Air Conditioning Engineers (ASHRAE) Standards

   ASHRAE 70 Methods of Testing for Rating the Performance of Outlets and Inlets

3. Air Conditioning and Refrigeration Institute (ARI) Standards

   ARI 650 Air Outlets and Inlets

4. National Fire Protection Association (NFPA) Standards

   NFPA 90A Installation of Air Conditioning and Ventilating Systems

5. Air Movement and Control Associations (AMCA) Standards

   AMCA 500 Test Method for Louvers, Dampers, and Shutters

6. Air Diffusion Council (ADC) Standards

   ADC 1062: GRD Test Code for Grilles, Registers, and Diffusers

7. American Society for Testing and Materials (ASTM Standards)

   ASTM E 90 Standard Method for Laboratory Measurement of Airborne Sound Transmission Loss of Building Partitions

1.03 Submittals

A. Submit shop drawings and product data in accordance with the provisions of Sections 01340 and 15050.

B. Submit product data on all air inlets and outlets including actuators proposed for installation under this Section.

C. Submit charts for color selection.

D. Submit sound attenuation data for acoustical products and sound power data for all outlets.

E. Submit airflow versus pressure drop performance data.

F. Submit louver schedule indicating type and sizes to suit field verified wall openings.

Part 2 Products

2.01 Stationary Louvers – Standard

A. Non-Drainable Blade Stationary Louvers

1. Frame shall be welded, box style and extruded from 6063T5 aluminum.

[] 2. Frame depth shall be [6] [4] -inches.

3. Frame minimum thickness shall be 0.081-inch.

4. Blade minimum thickness shall be 0.081-inch.

5. Blades shall be non-drainable type.

6. Provide with 0.081-inch thick extended sill.

7. Provide with continuous appearing stationary blades.

8. Provide with Kynar 500 finish on all exposed surfaces, color selected by the Engineer.

9. Provide with aluminum insect or bird screen, mounted on interior side of louver, as indicated on the Louver Schedule on the Drawings.

10. Louver air flow performance shall be AMCA certified. See the Louver Schedule on the Drawings for louver air flow performance.

[] 11. Acceptable Manufacturers: Equal to Ruskin Model [ELF6375] [ELF375].

B. Drainable Blade Stationary Louvers

1. Frame shall be welded, box style with downspouts in jambs and mullions and extruded from 6063T5 aluminum.

[] 2. Frame depth shall be [6] [4] -inches.

3. Frame minimum thickness shall be 0.081-inch.

4. Blade minimum thickness shall be 0.081-inch.

5. Blades shall have drain gutters.

6. Provide with 0.081-inch thick extended sill.

7. Provide with continuous appearing stationary blades.

8. Provide with Kynar 500 finish on all exposed surfaces, color selected by the Engineer.

9. Provide with aluminum insect or bird screen, mounted on interior side of louver, as indicated on the Louver Schedule on the Drawings.

10. Louver air flow performance shall be AMCA certified. See the Louver Schedule on the Drawings for louver air flow performance.

[] 11. Acceptable Manufacturers: Equal to Ruskin Model [ELF6375DX] [ELF375DX].

2.02 Stationary Louvers - Hurricane-Approved

A. Welded frame construction from extruded 6063T5 aluminum.

1. Frame shall be welded, box style with downspouts in jambs and mullions and extruded from 6063T5 aluminum.

[] 2. Frame depth shall be [6] [4] -inches.

3. Frame minimum thickness shall be 0.081-inch.

4. Blade minimum thickness shall be 0.081-inch.

5. Blades shall have drain gutters.

6. Provide with 0.081-inch thick extended sill.

7. Provide with continuous appearing stationary blades.

8. Provide with Kynar 500 finish on all exposed surfaces, color selected by the Engineer.

9. Provide with 3/4-inch mesh, 0.051-inch thick stainless steel bird screen, mounted on interior side of louver.

B. Control Damper

1. Provide motorized industrial control damper where scheduled on the Drawings. Where provided, damper and louver shall be mounted in common steel sleeve with damper mounted behind louver.

2. Control damper shall be multi-blade parallel type.

3. Blades:

   a. Minimum 0.080-inch thick extruded aluminum alloy 6063-T5, airfoil shape:

   b. Pivot Rods: Steel, minimum 3/4-inch diameter or hex.

   c. Maximum length 42-inches; maximum width 8-inches.

4. Seals:

   a. Blade: Mechanically attached, compressible neoprene or extruded vinyl blade seals, designed for temperature of minimum 40 degrees F at specified leakage rate. Adhesive attached seals are non-acceptable.

   b. Jamb: Compressible stainless steel seals between blade edge and jamb.

5. Frames: Galvanized steel channel 10-inches x 2-inches wide x minimum 12 gauge.

   a. Corner bracing.

   b. Full size of duct or opening in which installed.

6. Bearings: Stainless steel sleeve, or stainless steel ball type.

   a. Vertically Mounted: Thrust bearings.

   b. Maximum Spacing: 42-inches.

7. Linkage: Side linkage out of airstream. Minimum 3/16-inch x ¾-inch steel tie bars, minimum 3/8-inch stainless steel pivot pins with lock-type retainers, minimum 10 gauge galvanized steel clevis arms.

8. Actuator: Electric, 120 V, single phase, 60 Hz, two-position, spring-return type.

9. Leakage When Closed: Guaranteed less than 10 cfm per square foot at both 1-inch and 4-inches WG static pressure.

10. Damper shall be equal to Ruskin Model CD102.

C. Performance

1. Louver shall be approved for use in areas subject to hurricane force wind and rain conditions. Louvers shall be certified for use in areas subject to hurricane conditions through the following Miami-Dade County testing criteria:

a. PA201-94 Large Impact Missile Test.

b. PA202-94 Uniform Static Air Pressure Test Design Load.

c. PA203-04 Cycle Wind Pressure Test Design Load.

2. Louver air flow performance shall be AMCA certified. See the Louver Schedule on the Drawings for louver air flow performance.

D. Acceptable Manufacturers: Equal to Ruskin Model ELF6375DXD.

2.03 Adjustable Louvers - Fiberglass

A. Louver shall be fiberglass construction and comply with ASTM D 4385-8A. Resin shall be flame retardant vinyl ester based.

B. Frame shall be 0.125” thick, 4”x1.06” fiberglass channel.

C. Blades shall be 0.125” thick fiberglass on 45-degree angle at 5” center to center.

D. Linkage shall be fiberglass face linkage.

E. Screen shall be 0.5” mesh x 19 gauge PVC coated bird screen.

F. Axles shall be fiberglass rod stub.

G. Louver shall bear AMCA seal. See the Louver Schedule on the Drawings for louver air flow performance.

H. Bearings shall be PTFE.

I. Louver shall be provided with electric actuator.

J. Louver colors as selected by the Architect/Engineer during shop drawing review.

K. Acceptable Manufacturer: Equal to Swartwout Model AFG40 Fiber-Aire.

2.04 Combination Louvers

A. Non-Drainable Blade Combination Louvers.

1. Frame shall be welded, box style and extruded from 6063T5 aluminum.

2. Frame depth shall be 6-inches.

3. Frame minimum thickness shall be 0.081-inch.

4. Stationary blade minimum thickness shall be 0.081-inch.

5. Adjustable blade minimum thickness shall be 0.081-inch.

6. Adjustable blade edge seal shall be vinyl.

7. Adjustable blade pivot bearing shall be Nylon.

8. Stationary blade shall be non-drainable type.

9. Provide with 0.081-inch thick extended sill.

10. Provide with continuous appearing stationary blades.

11. Provide with Kynar 500 finish on all exposed surfaces, color selected by the Engineer.

12. Provide with aluminum insect or bird screen, mounted on interior side of louver, as indicated on the Louver Schedule on the Drawings.

13. Louver air flow performance shall be AMCA certified. See the Louver Schedule on the Drawings for louver air flow performance.

14. Acceptable Manufacturers: Equal to Ruskin Model ELC6375.

B. Drainable Blade Combination Louvers.

1. Frame shall be welded, box style with downspouts in jambs and mullions and extruded from 6063T5 aluminum.

2. Frame depth shall be 6-inches.

3. Frame minimum thickness shall be 0.081-inch.

4. Stationary blade minimum thickness shall be 0.081-inch.

5. Adjustable blade minimum thickness shall be 0.081-inch.

6. Adjustable blade edge seal shall be vinyl.

7. Adjustable blade pivot bearing shall be Nylon.

8. Stationary blades shall have drain gutters.

9. Provide with 0.081-inch thick extended sill.

10. Provide with continuous appearing stationary blades.

11. Provide with Kynar 500 finish on all exposed surfaces, color selected by the Engineer.

12. Provide with aluminum insect or bird screen, mounted on interior side of louver, as indicated on the Louver Schedule on the Drawings.

13. Louver air flow performance shall be AMCA certified. See the Louver Schedule on the Drawings for louver air flow performance.

14. Acceptable Manufacturers: Equal to Ruskin Model ELC6375.

2.05 Acoustical Louvers

A. Construction

1. Frame shall be welded, box style and constructed of 5005-H34 aluminum.

2. Frame depth shall be 12-inches.

3. Frame minimum thickness shall be 0.081-inch.

4. Blade minimum thickness shall be 0.081-inch.

5. Perforated aluminum interior side of blade minimum thickness shall be 22 gauge.

6. Acoustical fill shall be 6 pounds per cubic foot density fiberglass.

7. Provide with 0.081-inch thick extended sill.

8. Provide with continuous appearing stationary blades.

9. Provide with Kynar 500 finish on all exposed surfaces, color selected by the Engineer.

10. Provide with aluminum insect or bird screen, mounted on interior side of louver, as indicated on the Louver Schedule on the Drawings.

B. Performance

1. Louver shall have a free field noise reduction as follows:

Octave Band / Frequency (Hz)	Free Field Noise Reduction (dB)
2/125	10
3/250	11
4/500	18
5/1,000	20
6/2,000	19
7/4,000	20
8/8,000	21

2. Louver air flow performance shall be AMCA certified. See the Louver Schedule on the Drawings for louver air flow performance.

C. Acceptable Manufacturers: Equal to Ruskin Model ACL 1245.

2.06 Gravity Hoods

A. Intake vent shall be 0.08-inch thick aluminum. Base and throat shall have continuous welded mitered corners. Aluminum hood shall be supported and reinforced by a structural frame. All fasteners shall be aluminum.

B. Intake vents shall be provided with 2-inch thick cleanable aluminum filter, motorized backdraft damper and hinged hood.

C. Exhaust/relief vents shall be provided with gravity counter balanced backdraft damper, insect screen and hinged hood.

D. The roof curb shall be provided by the vent manufacturer to assure proper fit between vent curb cap and roof curb. The curb shall be 18-inches high, constructed of aluminum with continuously welded seams, with rigid fiberglass insulation bonded to the interior. A wood nailer shall be attached to the top of the curb for vent mounting. Construction of the curb shall account for roof scope. The roofing flange shall be the 45 degree cant type. The roof curb shall have a mounting flange located in the curb base to attach backdraft damper to.

E. Acceptable Manufacturers: Penn, Greenheck, or Acme.

2.07 Grilles, Registers and Diffusers

A. Units shall be of the type, size and construction as scheduled on the Drawings.

[] B. Unless otherwise noted on the Drawings, all units shall be supplied with a factory finish of [white baked enamel] _____.

Part 3 Execution

3.01 Louvers

A. Louvers shall be installed according to the manufacturer's recommendations, and shall be caulked and sealed at the frame and flanges to make the installation weathertight. Install louvers plumb, level, in plane of wall, and in alignment with adjacent work.

B. Combination louver dampers shall be installed with required damper operators and linkage mechanisms (furnished by louver/damper manufacturer) and shall be field adjusted for full opening/closure stroke. Louvers shall be interlocked with exhaust fans as scheduled on the Drawings and as described in Section 15950.

C. Install joint sealants in accordance with the requirements of Division 7.

D. Clean louver surfaces in accordance with manufacturer's instructions.

E. Repair minor damaged surfaces as directed by the Engineer.

3.02 Gravity Roof Vents

A. Install roof curb with roofing. Extend roof flashing up and over the roof curb sides. Mount backdraft damper to curb, not to roof.

B. Mount vent level on roof curb after bonding a rubber gasket to roof curb top edge. Secure vent to curb with lag bolts through vent curb cap with 12-inches maximum distance between bolts. Caulk between vent and curb to provide a weathertight seal.

3.03 Grilles, Registers, and Diffusers

A. All units located in ceiling tiles shall be centered or shall be on quarter points of 2 x 4 foot tiles.

B. Where a line of sight allows the ductwork, wall, or ceiling structure to be seen behind any units, such ductwork, wall, or ceiling structure shall be painted with non-flammable flat black paint to minimize visibility.

C. All units not installed on T-bar ceiling grids shall be securely fastened to adjacent structures.

D. Coordinate frame type with type of ceiling/wall to ensure proper installation.

END OF SECTION

Part 1 General

1.01 Scope

A. The electrical work commences with the point of electrical service where shown on the Drawings and includes furnishing all material and labor for a complete electrical installation.

B. The requirements of Division 1 apply to all work hereunder. The General and Special Conditions are a part of this Division of the Specifications and all provisions contained therein which affect this work are as binding as though incorporated herein.

1.02 Definitions

A. Provide: Furnish, install, and connect.

B. Product Data: Catalog cuts and descriptive literature.

C. Shop Drawings: Factory prepared specific to the installation.

D. Low Voltage: 0-600 volts.

E. Indicated: Shown on the Drawings.

F. Noted: Indicated or specified elsewhere.

1.03 Material Not Furnished

A. Unless otherwise noted, the following are furnished and installed under other Divisions:

1. Motors
2. Motor starters (except motor control centers)
3. Electric heating and air conditioning equipment
4. Building energy management systems
5. Electrical heat tracing
6. Pilot and control devices for the above equipment

B. All power wiring including associated terminations is provided under this Division. Control and signal wiring shown on the electrical drawings, including associated terminations is also provided under this Division. Control wiring for mechanical equipment not shown on the electrical drawings is provided under Division 15. Where digital communications cables (fiber optic cables, RS-485 cables, etc.), are specified under Division 17, cable pulling and installation in raceways shall be provided under

this Division with any required splices and all terminations provided under Division 17.

1.04 Local Conditions

A. Power will be supplied from the Owner's existing distribution system. Provide feeders and connections to existing equipment as indicated on the Drawings. No power interruptions to existing equipment are permitted unless schedule for same has been approved by the Owner.

B. Telephone, security, energy management and fire alarm will be tied into the Owner's existing system. Refer to the Drawings for conductors and interface requirements.

1.05 Quality Assurance

A. Provide the complete electrical installation in accordance with the National Electrical Code (NFPA 70), Life Safety Code (NFPA 101), and in accordance with applicable local codes. Obtain all necessary permits and have all work inspected by appropriate authorities.

B. All products shall be designed, manufactured, and tested in accordance with industry standards. Where applicable, products shall be labeled or listed by third party certification agencies.

C. Industry Standards: Standards organizations and their abbreviations, as used herein, are as follows. Applicable date for industry standards is that in effect on the date of advertisement of the Project.

1. American National Standards Institute (ANSI)

2. American Society for Testing and Materials (ASTM)

3. Federal Specifications (FS)

4. Institute of Electrical and Electronics Engineers (IEEE)

5. Insulated Cable Engineers Association (ICEA)

6. National Electrical Manufacturers Association (NEMA)

7. National Fire Protection Association (NFPA)

8. Underwriters Laboratories, Inc. (UL)

1.06 Submittals

A. Make all submittals in accordance with the requirements of Section 01340. Approval drawings consist of shop drawings, product data and other information as noted in the individual equipment sections. Except as noted, submittal information is for approval and equipment may not be installed until submittals have been returned with stamped

approval.

B. Information required "for reference" such as product samples, similar unit test reports and time current curves is for the purpose of determining the suitability of a product, selecting breaker settings, etc. This information is to be submitted at the same time as approval data; however, this information will not be returned and stamped approval is not required prior to installation.

C. Except as noted, installation instructions are not required to be submitted. However, it is the Contractor's responsibility to obtain installation information from the manufacturer for all equipment prior to installing the equipment.

1.07 Record Drawings

A. Furnish record drawings in accordance with the requirements of Section 01720. Record drawings consist of submittal data as listed above, operation and maintenance data, and as-built drawings. Record drawings are to reflect the final installation, including any changes during approval, manufacturing tests, and installation.

B. In addition to other required sets, furnish one set of operation and maintenance data for all apparatus requiring service. This set is to be bound in hardback, 3-ring binder(s) located in a hinged metal cabinet in the main electrical room and shall include:

1. Title page with Project name; installing contractor's name, address and telephone number; date of installation and warranty period.

2. Index sheet.

3. Complete manufacturer's operation and maintenance data with tabs (corresponding to the index) separating each item or system. Include the name, address, and phone number of the nearest sales and service organization for each item.

4. Coordination Study and written certification that devices have been set in accordance with the study.

C. As-Built Drawings: Furnish one set of prints maintained at the job site at all times with all changes during construction marked thereon. Include on the as-built drawings sufficient dimensions to permit location of underground conduits.

D. Submit the results of any tests required in the individual equipment sections.

1.08 Coordination Study

A. Description: Submit a coordination study with recommended settings for all fault protective devices within the scope of the study. The study shall be prepared by a registered professional engineer, who is not an employee of the Contractor, equipment supplier, or other party having a financial interest in the results of the study. The preparer shall certify that the protective device settings recommended represent a

reasonable engineering compromise between equipment protection and selective coordination.

B. Documentation: Provide tabulations of recommended settings and time current curves showing the degree of coordination obtained with the recommended settings. Also show equipment inrush characteristics and applicable protection limits such as motor stall times, transformer ANSI damage limits, cable heating limits and NEC overcurrent protection requirements. Include manufacturing tolerance and damage bands in plotted fuse characteristics. Terminate device characteristic curves at a point reflecting the maximum symmetrical or asymmetrical fault current seen by the device.

C. Scope: The study extends from the service entrance equipment down to, and including, the low voltage motor control centers. Panelboards and other equipment downstream from the low voltage motor control centers need not be included, except as required to obtain settings for equipment within the study scope.

D. Fault Currents: Maximum three phase symmetrical values for all major busses will be supplied by the Engineer. For high voltage busses, both momentary and interrupting network values will be supplied. Any other values needed are to be calculated as part of the study. Values supplied by the Engineer are to be used solely for determination of device settings - equipment ratings are as elsewhere noted.

E. Study Data: The Contractor is responsible for providing field data (conductor materials, existing device types, nameplate information, etc.), to the study preparer. The Contractor is also responsible for providing to the study preparer shop drawing data on new equipment. The study preparer is responsible for obtaining all other needed data (equipment data, time current curves, etc.)

F. Submittal Requirements: Submit the coordination study prior to, or concurrent with, distribution equipment within the study scope. This is to allow suggested improvements (relay ranges, CT ratios, etc.), that may arise in performing the study to be incorporated prior to equipment fabrication. Review procedures are as specified in Article 1.06 above.

1.09 Arc Flash Study

A. Description: Submit an arc flash study to facilitate compliance with NFPA 70E, Handbook for Electrical Safety in the Workplace. Arc Flash Study shall be performed using software specifically for the purpose and all calculations shall comply with IEEE 1584.

B. Documentation: Provide an Arc Flash analysis summary including as a minimum the following information:

1. Equipment name

2. Equipment voltage

3. Available fault current (3 phase bolted)

4. Arcing fault current

5. Protective device operating time

6. Arc flash boundary (in.)

7. Working distance (in.)

8. Incident Energy (cal/cm^2)

9. Protective clothing category

Provide arc flash warning nameplates for each individual equipment item. Nameplates shall include the wording “WARNING – Arc Flash Hazard. Protective Equipment Required”. Nameplate shall also include the analysis data as listed above, settings (where applicable) of the equipment main protective device and a description of protective clothing required.

C. Scope: Study shall include all electrical distribution equipment from the service entrance equipment down to and including branch circuit panelboards.

D. Study Data and Submittal Requirements: Fault current and equipment data are as specified above under “Coordination Study”, Arc Flash Study shall be included with or submitted concurrently with the coordination study.

1.10 Delivery, Storage, and Handling

A. Ship products to the job site in their original packaging. Receive and store products in a suitable manner to prevent damage or deterioration. Keep equipment upright at all times.

B. Investigate the spaces through which equipment must pass to reach its final destination. Coordinate with the manufacturer to arrange delivery at the proper stage of construction and to provide shipping splits where necessary.

Part 2 Products

2.01 Materials

Provide only new products of the manufacturer's latest design.

2.02 Substitutions

Where the words "equal to" follow or precede the listed acceptable manufacturers, equal products of other manufacturers are acceptable and request for substitution may be made during submittal stage.

Part 3 Execution

3.01 Installation

A. The complete installation is to be accomplished by skilled electrical tradesmen, with certified or suitably qualified individuals performing all special systems installation and testing. All workmanship shall be of the highest quality, sub-standard work will be rejected.

B. Schedule the work and cooperate with all trades to avoid delays, interferences, and unnecessary work. If any conflicts occur necessitating departures from the Drawings and Specifications, details of departures and reasons therefore shall be submitted immediately for the Engineer's consideration.

C. Do not stub up conduits prior to receipt of approved shop drawings showing conduit entry locations.

D. Prior to final inspection, clean all dirt, mud and construction debris from all boxes, cabinets, manholes and equipment enclosures.

3.02 Certification and Tests

A. Prior to request for final review, test all systems and repair or replace all defective work. Submit, with request for final review, written certification that all electrical systems are complete and operational.

B. At the time of final review of electrical work, demonstrate the operation of electrical systems. Furnish labor, apparatus and equipment for systems' demonstration.

C. After final review and acceptance, turn over to the Owner all keys for electrical equipment locks. Present to the Owner or the Owner's designated representative, demonstrations and oral instructions for proper operation and maintenance of the electrical equipment and systems.

END OF SECTION

Part 1 General

1.01 Scope

A. The electrical demolition work commences with the point where indicated on the Drawings and includes furnishing all equipment, materials and labor to accommodate new work.

B. Scheduling: Coordinate all demolition and modification work with the requirements of Division 1 of these Specifications.

C. Methods of demolition work shall provide for a safe conduct of work, and protection of property which is to remain in service and undisturbed.

1.02 Submittals

Submit to the Owner for review, a written detailed procedure and method for each structure to be demolished or modified. The submittal shall include approximate dates and times of de-energization of services.

Part 2 Products (Not Used)

Part 3 Execution

3.01 Demolition

A. Coordinate and schedule all demolition work and outages of existing services prior to starting work.

B. Existing services and facilities damaged or otherwise interrupted by the Contractor through negligence or through use of faulty materials or workmanship shall be promptly repaired, replaced, or otherwise restored by the Contractor without additional cost to the Owner.

C. Interruptions of services necessary for connection to or modification of existing systems or facilities shall occur only at pre-arranged times approved by the Owner. Interruptions shall only occur after the provision of all necessary temporary work and the availability of adequate labor and materials has been assured that the duration of the interruption will not exceed the time agreed upon.

D. Existing materials shall remain the property of the Owner and shall be stored at a location and in a manner as directed, or if classified by the Owner as unsuitable for further use, shall become the property of the Contractor and shall be removed from the site.

E. All underground ductbank and conduits which are not in conflict with the new work shall be abandoned.

F. All exposed conduits in structures or buildings to be removed, shall be cut and plugged flush with structure or floor.

G. All wiring to be removed shall be disconnected at distribution panels or MCCs. All wiring which serves equipment to be removed shall be removed.

H. Schedule: Demolish electrical equipment from structures as indicated or as required to facilitate the installation of new equipment and work.

I. All wiring, conduit or equipment designated on the Demolition Plan shall be disposed of in a safe manner in accordance with all applicable local, state and federal environmental agencies.

END OF SECTION

Part 1 General

1.01 Scope

This Section includes basic materials and methods common to all Sections of Division 16.

1.02 Submittals

Submit product data.

Part 2 Products

2.01 Wiring Devices

A. Wall Switches: NEMA WD 1; FS W S 896; 20 amp, 120/277 volt, specification grade; horsepower rated; quiet type; back and side wiring provisions; toggle handle.

B. Convenience Receptacles: NEMA WD 1; FS W C 596; 15 amp, 125 volt, specification grade; impact resistant nylon face; back and side wiring provisions; grounding screw. Where CR or NEMA 4X is indicated, provide corrosion resistant receptacle, yellow nylon body, one-piece brass contacts. Exception: Provide 5-20R receptacles for branch circuits serving one device.

C. Specific Use Receptacles: NEMA WD 1 or WD 5; type as indicated. For branch circuits serving a single device, match device rating to branch circuit rating.

D. Receptacle, Ground Fault Interrupter: Duplex, specification grade, tripping at 5-milliamps; 125-volt, configuration 5-20R.

E. Device Colors: Gray, unless otherwise selected by the Architect for specific use devices.

F. Indoor Device Plates: Type 302 stainless steel, 0.030 inch thick minimum, satin finish.

G. Indoor Corrosion Resistant (NEMA 4X) Cover Plates: Type 302 stainless steel, specification grade, gasketed, with silicone rubber mat, equal to Pass & Seymour 4515 or 4515FS for toggle switches. Cast aluminum, gasketed, equal to Pass & Seymour CA Series for receptacles. For devices which are continuously plugged in, provide cast aluminum, suitable for wet locations while-in-use, equal to Hubbell WP26.

H. Outdoor Weatherproof (NEMA 3R and NEMA 4X) Cover Plates: Stainless steel, specification grade, gasketed equal to Sierra WP Series. For heat tape, instruments, or other devices which are continuously plugged in, provide die cast aluminum, suitable for wet locations while in use, equal to Hubbell WP26.

2.02 Disconnect Switches

A. Disconnect Switches: UL-98 and NEMA KS-1; heavy duty, quick make, quick break type; horsepower and i2t rated. Provide lever type operating handle directly connected to the switch mechanism; rocker types are not acceptable. Include padlocking provisions and nameplate clearly indicating “ON” and “OFF” positions. Equip all switches with a ground lug and, where neutral conductors are scheduled, provide insulated neutral lugs.

B. Fusible Switches: Equip with rejection clips for fuse types noted.

C. Enclosure: Stainless steel meeting NEMA 4X and 12 requirements.

D. Acceptable Manufacturers: Cutler-Hammer, General Electric, Square D or Siemens.

2.03 Enclosed Circuit Breakers

A. Circuit Breakers: NEMA AB-1; thermal magnetic trip with magnetic pickup adjustment above 100 amps. Where molded case switches are indicated, provide breaker as specified above with non-adjustable magnetic trip element only.

B. Enclosure: Stainless steel meeting NEMA 4X and 12 requirements.

C. Interrupting Rating: 42,000 AIC

D. Acceptable Manufacturers: General Electric, Siemens, Square D or Cutler-Hammer.

2.04 Individual Motor Starters

A. Manual Starters: NEMA ICS-2; general purpose type; trip-free mechanism; with overload relays. Provide pushbutton operation for integral horsepower sizes, and toggle switch or lever for fractional sizes.

B. Magnetic Starters: NEMA ICS-2; NEMA size 0 minimum; magnetically held contactor with field replaceable coil and contacts; bimetallic or melting alloy overload relay, manually reset. Starter shall be rated in accordance with NEMA size designations; fractional sizes and ratings per IEC recommendations are no t acceptable.

C. Magnetic Starter Controls: All controls are 120 volts. Equip each starter with a control power transformer fused on the primary and secondary. Provide starter overload relay auxiliary contacts for red run light, green stop light and amber overload light on the enclosure door. Provide one spare normally open starter auxiliary contact, and door mounted start-stop pushbuttons or hand-off-auto selector switch as indicated.

D. Combination Starters: Molded case circuit breaker rated 42,000 AIC.

E. Enclosure: Stainless steel meeting NEMA 4X and 12 requirements.

F. Acceptable Manufacturers: Allen-Bradley, Cutler-Hammer, General Electric, Siemens or square D.

2.05 Contactors

A. Control Relays: NEMA A600; heavy duty, machine tool type convertible contacts; electrically held 120 volt coil. Equal to Allen-Bradley Bulletin 700 Type P.

B. General Purpose Contactors: NEMA ICS-2; electrically held; 2-wire control; 120 volt coil. Size and number of contacts as indicated.

C. Lighting Contactors: NEMA ICS-2; mechanically held; 3 wire control; 120 volt coil. Size and number of contacts as indicated.

D. Enclosure: NEMA ICS-6; Type 1 unless otherwise noted.

E. Acceptable Manufacturers: General Electric, Square D, ASCO, or Cutler-Hammer.

2.06 Control Stations

A. Pushbuttons, Selectors and Pilot Lights: 600 volt, heavy duty, factory sealed.

B. Enclosure: Stainless steel meeting NEMA 4X.

C. Acceptable Manufacturers: Equal to Allen-Bradley Bulletin 800T.

2.07 Individual Surge Suppressors

A. Surge Suppressor: Listed in accordance with UL 1449, Second Edition and UL 1283. Device shall provide surge current diversion paths for 120 VAC circuit application; L-N, L-G, and N-G. Device shall be fused with a surge rated fuse and incorporate a thermal cutout device. An audible alarm shall indicate protection failure. Minimum surge current capability shall be 50 kA.

B. Enclosure: NEMA 4X stainless steel.

C. Acceptable Manufacturers: Equal to Advanced Protection Technologies TE/XP Series (suppressor) and Hoffman (enclosure).

2.08 Fuses

A. Fuses: Current limiting, non-renewable type, rated 200,000 AIC, with rejection feature; Class J or as required by load for ratings 600 amp and below and Class L for ratings 601 amp and above.

B. Acceptable Manufacturers: Bussmann, Chase-Shawmut, or Littelfuse.

2.09 Plywood Backboards

Backboards: Grade BC plywood, 3/4-inch thick. Paint with two coats of flat black paint.

2.10 Supporting Devices

A. Support Channel: Galvanized or painted steel.

B. Hardware: Corrosion resistant.

2.11 Electrical Identification

A. Nameplates: Engraved three-layer laminated plastic, black letters on white background.

B. Wire and Cable Markers: Plastic, split sleeve or tubing type.

Part 3 Execution

3.01 Wiring Devices

A. Secure devices to outlet boxes without depending on device plates to pull them tight. Install a bonding jumper between all devices and outlet boxes. Install receptacles with ground pole down.

B. For cord and plug connected equipment, coordinate receptacle configuration with equipment supplied.

3.02 Disconnect Switches

A. Provide switches with voltage, ampere, and number of poles as indicated on the Drawings.

B. Switches are non-fused type, unless Drawings note otherwise, or the switch is used as a disconnect for an item of equipment with a maximum fuse size designated on the nameplate. In such cases, provide fusible type with appropriate fuse. If fusible switches protect conductors with an ampacity less than the rating of the switch, provide a nameplate on the inside front cover of the switch designating the maximum allowable fusing.

C. Install switches so they are rigidly supported and readily accessible. Where mounted on stud walls, provide a plywood backboard secured to the studs with the switch secured to the backboard. Provide stainless steel mounting channel or phenolic spacers to give nominal 1/2-inch separation from concrete walls in wet or damp locations.

D. For disconnect switches serving motors with space heaters, provide lamecoid nameplate engraved “WARNING – Motor space heater energized with switch open”.

3.03 Enclosed Circuit Breakers

A. Provide breakers with voltage, ampere, number of poles, and interrupting ratings as indicated on the Drawings.

B. Install breakers so they are rigidly supported and readily accessible. Where mounted on stud walls, provide a plywood backboard secured to the studs with the breaker secured to the backboard. Provide stainless steel mounting channel or phenolic spacers to give nominal 1/2-inch separation from concrete walls in wet or damp locations.

3.04 Individual Motor Starters

A. Select and install heater elements in motor starters to match installed motor characteristics. Do not use NEC motor full load ampere data for heater selection.

B. Provide a typed label inside each motor starter enclosure door identifying the motor served and listing the motor nameplate data. Provide an engraved nameplate on the exterior of the enclosure door identifying the motor served, the horsepower, voltage and phase rating.

C. Install starters so they are rigidly supported and readily accessible. Where mounted on stud walls, provide a plywood backboard secured to the studs with the starter secured to the backboard. Provide stainless steel mounting channel or phenolic spacers to give nominal 1/2-inch separation from concrete walls in wet or damp locations.

3.05 Contactors

A. Install timer and lighting controls for contactors as indicated.

B. Install indicator lights in enclosure door as indicated.

3.06 Control Stations

Install control stations so they are rigidly supported and located so as not to impair access to equipment for maintenance.

3.07 Individual Surge Suppressors

Install suppressors so they are rigidly supported and accessible.

3.08 Fuses

Equip all fusible devices with fuses. Replace all blown fuses up to final acceptance of the Project. At the completion of the Project, turn over to the Owner spare fuses for each type and size installed; six each for ratings 60 amps and below, and three each for ratings above 60 amps.

3.09 Plywood Backboards

Provide plywood backboards for surface mounted electrical distribution equipment in areas such as mechanical rooms, electrical closets, and equipment rooms. Secure backboards to the building structure and paint with two coats of flat black paint.

3.10 Supporting Devices

A. Fasten hanger rods, support stands, conduit clamps, etc. to building structure using expansion anchors or beam clamps.

B. Do not fasten supports to piping, ductwork, mechanical equipment, or conduit. Do not use powder actuated fastening devices. Do not drill structural steel members.

3.11 Electrical Identification

Provide nameplates for all switchboards, panelboards, transformers, disconnect switches, individual motor starters, and other items of electrical distribution equipment. Engrave with the equipment identification as indicated; and the voltage, current and interrupting rating. Attach nameplates with screws or rivets; adhesives are not acceptable. Exception: Two-part epoxy glue may be used for NEMA 4/4X enclosures.

END OF SECTION

Part 1 General

1.01 Scope

A. Rigid metal conduit and fittings.

B. Intermediate metal conduit and fittings.

C. Flexible metal conduit and fittings.

D. Liquidtight flexible metal conduit and fittings.

E. Non-metallic conduit and fittings.

F. Electrical metallic tubing and fittings.

1.02 Submittals

Do not submit equipment specified in this Section.

Part 2 Products

2.01 Acceptable Manufacturers

A. Conduit: Allied, Republic, Triangle or Wheatland.

B. PVC Coated Conduit and Fittings: Ocal, Permacote or Robroy.

C. PVC Conduit: Amoco, Carlon or Certainteed.

D. Flexible Conduit: Anaconda, Thomas & Betts, Electric Flex or Triangle.

E. Fittings: Appleton, Crouse-Hinds, Oz or Thomas & Betts.

F. Nonmetallic Flexible Conduit and Fittings: Carlon Carflex.

G. Substitutions: Products equal to those listed.

2.02 Rigid Metal Conduit and Fittings

A. Rigid Steel Conduit: UL 6; ANSI C80.1; hot dip galvanized; minimum size 3/4-inch.

B. Rigid Aluminum Conduit: UL 6; ANSI C80.5; minimum size 3/4-inch.

C. PVC Coated Conduit: NEMA RN-1 or UL-6 rigid steel conduit with factory applied external 40 mil PVC coating and urethane interior coating. Prior to coating, treat conduit with a heat polymerizing adhesive so the bond between metal and coating is greater than the tensile strength of the coating. Minimum size 3/4-inch.

D. Fittings and Conduit Bodies: NEMA FB-1; zinc coated; taper-threaded type, material to match conduit. Where PVC coated conduits are indicated all couplings, fittings, conduit bodies, pipe straps, U bolts, beam clamps, flex connections and other accessories shall be stainless steel or shall have factory applied PVC coating. Use PVC coated hubs for connection of coated conduits - locknuts are not acceptable.

2.03 Intermediate Metal Conduit (IMC) and Fittings

A. IMC: UL 1242; hot dip galvanized; minimum size 3/4-inch.

B. Fittings and Conduit Bodies: Use fittings and conduit bodies specified above for rigid steel conduit.

2.04 Flexible Metal Conduit and Fittings

A. Conduit: UL 1; FS WW-C-566; single steel continuous strip with galvanized coating; minimum size 3/8-inch.

B. Fittings and Conduit Bodies: NEMA FB-1; malleable iron squeeze type.

2.05 Liquidtight Flexible Conduit and Fittings

A. Conduit: UL listed liquidtight consisting of an extruded thermoplastic cover over a galvanized steel core. Minimum size 3/4-inch. Exception: Where connected to devices with manufacturer supplied 1/2 or 3/8-inch hubs, match conduit size to hub size.

B. Fittings and Conduit Bodies: NEMA FB-1; galvanized steel compression type with O-ring. Where PVC coated conduits are indicated, provide PVC coated fittings for flex connections.

2.06 Rigid Nonmetallic Conduit and Fittings

A. Conduit: NEMA TC-2; Schedule 40 PVC.

B. Fittings and Conduit Bodies: NEMA TC-3.

2.07 Liquidtight Flexible Non-Metallic Conduit and Fittings

A. Conduit: UL listed, liquidtight consisting of a hand PVC spiral with flexible PVC covering. Minimum size is 3/4-inch.

B. Fittings: UL listed, molded from high-strength, glass-filled thermoplastic.

2.08 Electrical Metallic Tubing (EMT) and Fittings

A. EMT: ANSI C80.3; hot dip galvanized mild strip steel; minimum size 1/2-inch.

B. Fittings and Conduit Bodies: NEMA FB-1; steel or malleable iron, compression type with insulated throat. Indenter or set screw type connectors are not acceptable.

Part 3 Execution

3.01 Conduit Schedule

A. Except as noted, use only rigid steel or IMC conduits.

B. Use liquidtight flexible steel conduit for connections to motors, transformers and other vibrating equipment. Maximum length is 3 feet unless approved by the Engineer.

C. EMT may be used where concealed in spaces above hung ceilings and in hollow spaces of interior partitions.

D. Non-jacketed flexible steel conduit may be used for connections to lighting fixtures in suspended ceilings.

E. Use PVC coated conduits where conduits are in direct contact with earth. Provide 24 inches minimum cover.

F. Rigid nonmetallic conduit may be used for underground concrete encased duct banks and in or below slab on grade. Exception: Use rigid steel or IMC conduit for analog signal circuits; 4 to 20 mA and AC or DC signals less than 25 volts.

G. Where PVC conduit is indicated, make a transition to rigid steel below grade or slab and continue above with rigid steel conduit. Exception: PVC may enter switchboards, motor control centers or other floor standing electrical equipment enclosures. Provide bell ends or socket end bell at enclosure entry.

H. Where aluminum conduit is indicated, conduit may not be installed in direct contact with concrete or masonry surfaces.

3.02 Conduit Arrangement and Support

A. Arrange conduit to maintain headroom and present a neat appearance. Run exposed conduits parallel or perpendicular to building surfaces and adjacent piping. Group conduit in parallel runs where practical and provide rack space for 25 percent additional conduits. Use concentric bends for parallel runs.

B. Avoid sources of heat when possible. Where unavoidable, maintain 3-inch clearance when crossing hot pipes and 12-inch clearance between parallel hot pipes, flues, heating appliances and other heat sources.

C. Support conduits to prevent distortion of alignment by wire pulling operations. Fasten single conduits with one hole malleable iron straps. For multiple runs use channel and clamps. Wire, perforated pipe straps and the like are not acceptable support means.

D. Support conduit at a maximum of seven feet on center and within three feet of each box, cabinet, or fitting. Hang trapeze assemblies with threaded rods not less than 3/8-inch diameter. Remove all temporary supports prior to pulling conductors.

E. Do not support conduits from electrical distribution equipment or control panels.

3.03 Conduit Installation

A. Cut conduit square using a saw or pipecutter and de-burr cut ends. Paint threads with zinc compound. Bring conduit to the shoulder of fittings and couplings and fasten securely. All connections are to be wrench tightened and electrically continuous. No running threads are permitted.

B. Use conduit hubs for fastening conduit to cast boxes, and for fastening conduit to sheet metal boxes in damp or wet locations. Use conduit bodies to make sharp changes in direction. For sizes 2-inches and larger, use "LBD" or similar fittings to permit a straight pull from either direction. In no case shall a fitting be used which results in bending radius too small for the cable.

C. The maximum length between pull points is 400 feet. This length shall be reduced by one foot for each degree of bend.

D. Use hydraulic one-shot conduit bender or factory elbows for bends in conduit larger than 2-inch size. Crushed or deformed conduits may not be installed.

E. Avoid moisture traps where possible; where unavoidable, provide junction box with drain fitting at conduit low point.

F. Use suitable conduit caps to protect installed conduit against entrance of dirt and moisture. Install threaded PVC end caps on conduits stubbed up for future use.

G. Provide a 200 pound tensile strength polyolefin line pulled through and tied off at each end of all empty conduits.

H. Install expansion joints equal to Crouse Hinds type XJ where conduit crosses building expansion joints and for straight runs in excess of 100 feet. For seismic joints use expansion joints equal to Crouse Hinds type XD.

I. Where conduit penetrates fire-rated walls and floors, provide mechanical fire-stop fittings with UL listed fire rating equal to wall or floor rating.

J. Provide watertight seals, equal to OZ type WSK, FSK, or CSM, where conduit penetrates exterior walls and where conduit passes between spaces normally at different temperatures. Seal duct bank and underground conduit entry with GE or Dow silicone sealant. Stub duct bank and underground conduits up a minimum of 2-inches above equipment pads and provide bushing.

K. Obtain approved shop Drawings showing conduit entry space before stubbing conduits in floor standing electrical gear.

L. In locations where the conduit cannot be turned, provide three-piece threaded rigid couplings.

M. Provide clamp backs for conduits on exterior or damp surfaces to prevent the raceway from bearing directly on the damp surface.

N. Route conduits in slabs above grade above the bottom reinforcing and below the top reinforcing. Maximum size for conduits in slabs above grade is 1-inch and minimum cover is 2-inches. Route so conduits in slabs above grade do not cross. For slab on grade route conduits in a trench below slab at sufficient depth to permit vertical exit from slab. Home runs shall not be routed in slabs except where indicated.

O. Protect conduit threads from rust and damage during construction.

P. PVC Conduit Bends: Do not use methods which will deform or change the physical characteristics of the conduit. Use PVC-coated rigid steel factory elbows for bends in runs longer than 100 feet, and in runs which have more than two bends, regardless of length. Exception: Where concrete encased in slab or ductbank, GRS elbows may be used in lieu of PVC coated.

Q. Wipe plastic conduit clean and dry before joining. Apply full even coat of cement to entire area that will be inserted into fitting. Let joint cure for 20 minutes minimum.

R. PVC Coated Conduit: Exercise care not to damage the coating during cutting, threading, bending, and assembly. Follow the manufacturer's installation instructions. Use vise jaws, bending equipment, strap wrenches, and other tools which are specifically designed for coated conduits. Do not use chain vise, pipe wrench, channel locks or the like. Nicks or small damaged areas (1/2-inch maximum) may be repaired with a manufacturer approved compound. Replace items if coating is damaged in excess of 1/2-inch. Fill space between PVC coating and reducing fittings with silicone sealant.

S. Conductor Protection: Provide bushings on metallic and bell ends on PVC conduits unless conduit terminates in a hub or similar fitting.

3.04 Underground Duct Bank Installation

A. Install top of duct bank minimum 18-inches below finished grade with plastic warning tape 12-inches below finished grade.

B. Install conduit with minimum grade of 4-inches per 100 feet.

C. Terminate conduit in end bell at manhole entries.

D. Stagger conduit joints in concrete encasement 6-inches minimum.

E. Provide minimum 3-inch concrete cover at bottom, top, and sides of duct bank. Use suitable separators and chairs installed not greater than four feet on centers to

provide conduit spacing as indicated. Securely anchor conduit to prevent movement during concrete placement.

F. Construct duct banks with 3,000 psi concrete. Provide two No. 4 steel reinforcing bars in top of bank under paved areas.

G. Where duct bank passes beneath footings or slabs resting on grade excavate to provide a minimum of 6-inch clearance between the conduits and the structure. Backfill to the base of the structure with concrete.

END OF SECTION

Part 1 General

1.01 Scope

A. Building wire.

B. Cable.

C. Wiring connections and terminations.

1.02 Submittals

A. Submit product data.

B. Submit test results as listed in Part 3.

Part 2 Products

2.01 Acceptable Manufacturers

A. Low Voltage Conductors: Equal to Aetna, American, Cablec, Continental, Okonite, Pirelli, Southwire or Triangle.

B. Signal Circuit Conductors: Equal to Belden, Continental, Dekoron or Penn.

C. Low Voltage Connectors: Equal to Burndy, Thomas & Betts, Ideal or OZ.

D. Pulling Compounds: Water soluble, equal to Polywater J.

E. Wire and Cable Markers: Plastic, split sleeve or tubing type, equal to Brady Type XC or T & B Type SM.

2.02 Building Wire

A. Thermoplastic Insulated Building Wire: NEMA WC-5.

B. Feeder and Branch Circuits: Single conductor; 98 percent conductivity copper; 75/90 degrees C; 600 volt PVC insulated with nylon jacket; Type THWN/THHN for sizes #1 AWG and smaller. Sizes larger than #1 AWG are XLP insulation type XHHW. Minimum size #12 AWG.

C. Control Circuits: Same as specified above for feeder and branch circuits, except minimum size #14 AWG.

2.03 Tray Cable

Cable: Multi-conductor copper; 600 volt thermoplastic insulation; 75/90 degrees C; Type THWN/THHN; flame and moisture resistant fillers and binder with non-propagating, flame resistant PVC jacket; UL labeled Type TC.

2.04 Remote Control and Signal Cable

A. Control Cable for Class 1 Remote Control and Signal Circuits: Copper conductor; 600 volt insulation, rated 60 degrees C; individual conductors twisted together, shielded, and covered with a PVC jacket; UL listed.

B. Control Cable for Class 2 or Class 3 Remote Control and Signal Circuits: Copper conductor, 300 volt insulation, rated 60 degrees C, individual conductors twisted together, shielded, and covered with a PVC jacket; UL listed.

C. Plenum Cable for Class 2 or Class 3 Remote Control and Signal Circuits: Copper conductor, 300 volt insulation, individual conductors twisted together, shielded, and covered with a fluoropolymer jacket; UL listed for use in air handling ducts, hollow spaces used as ducts, and plenums.

D. Instrumentation Signal Cables: #16 AWG stranded tinned copper conductors; 600 volt polyethylene insulation; twisted pair or three conductor construction; 100 percent coverage aluminum polyester shield; #18 stranded tinned copper drain wire; vinyl outer jacket; UL listed.

Part 3 Execution

3.01 General Wiring Methods

A. Use only stranded conductors.

B. Use 10 AWG conductor for 20 ampere, 120 volt branch circuit home runs longer than 75 feet, and for 20 ampere, 277 volt branch circuit home runs longer than 200 feet.

C. Place an equal number of conductors for each phase of a circuit in same raceway or cable.

D. Identification: All conductors shall be identified throughout the electrical system. For control and signal conductors use wiremarkers at all terminals and connections. Color code power circuit conductors as follows:

	120/208 Volt System	277/480 Volt System
Phase A	Black	Brown
Phase B	Red	Orange

	120/208 Volt System	277/480 Volt System
Phase C	Blue	Yellow
Neutral	White	Grey
Ground	Green	Green

E. For conductors larger than #6 AWG color coding may be accomplished with 1-inch wide colored tape applied at each end of the conductor or at points where conductor is accessible so as to be visible inside the enclosure.

F. Neatly train and lace wiring inside boxes, equipment and panelboards. Support to prevent conductor movement under fault conditions.

G. Provide separate pull and junction boxes to keep analog signal separate from control and power wiring.

3.02 Wiring Installation in Raceways

A. Unless otherwise indicated, install all conductors in conduit.

B. Pull all conductors into a raceway at the same time. Thoroughly swab raceway system before installing conductors. Use wire pulling lubricant for all pulls. Do not exceed the manufacturer's pulling tension.

C. Install wire in raceway after interior of building has been physically protected from the weather and all mechanical work likely to injure conductors has been completed.

3.03 Cable Installation in Trays

A. Neatly place cables in trays and secure to tray rungs on five foot intervals using black nylon cable ties. Install cables using rollers, pulleys, or other installation device to avoid damage to cable or tray.

B. Unless otherwise indicated, enter and exit trays from the bottom to permit additional cables to be installed with minimum interference. Exercise care with cable entry so that manufacturer's recommended minimum radii are met, and cables are not left to rest unprotected on any sharp edge or corner.

3.04 Wiring Connections and Terminations

A. Avoid unnecessary splices. Splice only in accessible junction or outlet boxes.

B. Make connections to circuit breakers, disconnect switches, panel mains, etc., with solderless lugs.

C. Use mechanical connectors for splices, taps, fixture and motor connections. Exception: Square thread helical spring plastic cap (wire nut) type connectors are

acceptable for solid conductor splices and taps. Provide adapters as required for terminations of multiple conductors.

D. Use insulated throat, spade type crimp on connectors for strap screw device terminals. Exception: Receptacle back wiring provisions may be used for terminating solid conductors.

E. Where possible use connectors with integral, insulating covers. Otherwise tape uninsulated conductors and connectors to 150 percent of the insulation value of conductor.

F. Thoroughly clean wires before installing lugs and connectors.

G. Make splices, taps and terminations to carry full ampacity of conductors without perceptible temperature rise.

3.05 Field Quality Control

A. Inspect wire and cable for physical damage and proper connection.

B. Torque test conductor connections and terminations to manufacturer's recommended values.

C. Continuity Tests: Ring all conductors for continuity and replace any open conductors.

D. Ground Fault Tests: Meggar all feeder circuits for grounds. Compile and submit a list of meggar readings. Replace all conductors measuring less than 2 megohms to ground.

END OF SECTION

Part 1 General

1.01 Scope

A. Outlet boxes.

B. Pull and junction boxes.

1.02 Submittals

Submit product data.

Part 2 Products

2.01 Acceptable Manufacturers

Boxes shall be equal to Appleton, Crouse Hinds, Hoffman, Raco, or Steel City.

2.02 Outlet Boxes

A. Sheet Metal Outlet Boxes: NEMA OS-1; galvanized steel, with 1/2-inch male fixture studs where required.

B. Nonmetallic Outlet Boxes: NEMA OS-2.

C. Cast Boxes: Material to match conduit; aluminum or cast feralloy with galvanized or cadmium finish, deep type, gasketed cover, threaded hubs.

2.03 Pull and Junction Boxes

A. Sheet Metal Boxes: NEMA OS-1; galvanized steel. Boxes larger than 12-inches in any dimension are hinged enclosure as specified under Section 16160.

B. Cast Metal Boxes: NEMA 250; Type 4, galvanized cast iron box and cover, neoprene gasket, stainless steel cover screws, UL listed as raintight. Provide flat-flanged type for surface mounting and outside flange recessed cover type for underground use. Boxes for sidewalk or other traffic areas to have appropriate duty cover with non-skid finish.

C. Corrosion Resistant Boxes: UL 508, NEMA Type 4X non-metallic fiberglass reinforced polyester, gasketed screw cover. For boxes larger than 12-inches in any dimension provide hinge on one side and stainless steel toggle latches (equal to Hoffman A-FC4-12SS) on the other three sides. Equal to Crouse Hinds Krydon type NJB, Type 316 stainless steel equal to Hoffman Bulletin A-4.

2.04 Wireways

Wireways shall be 14 gauge steel minimum, hinged cover and body, NEMA 12, grey powder finish inside and out.

Part 3 Execution

3.01 Coordination of Box Locations

A. Provide boxes as shown on Drawings, and as required for splices, taps, wire pulling, and equipment connections.

B. Box locations shown on the Drawings are approximate unless dimensioned. Verify box locations prior to rough-in. Coordinate mounting heights and locations of outlets mounted above counters, benches, backsplashes, and other furnishings. Locate outlet boxes to permit handicap access per ANSI A117.1. Any outlet may be relocated by up to 10 feet before it is permanently installed without incurring additional cost.

3.02 Installation

A. Do not install boxes back-to-back in walls. Provide minimum 6-inch separation, except provide minimum 24-inch separation in acoustic-rated walls.

B. Locate boxes in masonry walls to require cutting of masonry unit corner only. Coordinate masonry cutting to achieve neat openings for boxes.

C. Support boxes independently of conduit. Provide knockout closures for unused openings.

D. Use multiple-gang boxes where more than one device is mounted together; do not use sectional boxes. Provide barriers to separate wiring of different voltage systems.

E. In inaccessible ceiling areas, position outlets and junction boxes within 6-inches of recessed luminaire, to be accessible through luminaire ceiling opening.

F. Provide recessed outlet boxes in finished areas; secure boxes to interior wall and partition studs, accurately positioning to allow for surface finish thickness. Use stamped steel stud bridges for flush outlets in hollow stud wall, and adjustable steel channel fasteners for flush ceiling outlet boxes.

G. Align wall-mounted outlet boxes for switches, thermostats, and similar devices. Align adjacent devices at different elevations in one vertical line. Set floor boxes level and flush with finish flooring material.

H. Unless otherwise noted, use only cast boxes. Sheet metal boxes may be used where concealed above ceilings or in dry walls, exposed in electrical closets, and for telephone wiring.

I. Field drill conduit holes in tap, junction and pull boxes so as to afford the maximum bending radius for the conductors.

J. Use PVC coated boxes wherever PVC coated conduit is indicated. Exceptions: stainless steel is permitted for boxes larger than 5 inches square.

K. Label cover of junction boxes with circuit numbers of conductors in the box.

END OF SECTION

Part 1 General

1.01 Scope

Squirrel cage induction motors.

1.02 Related Work

All motor driven equipment sections except hermetic refrigerant motor-compressors and submersible motors.

1.03 Work Specified Elsewhere

Except as noted, equipment specified in this Section is provided under other Divisions. Include, under this Section, receiving, storage, handling and wiring.

1.04 Quality Assurance

A. Equipment Standards: NEMA MG-1.

B. Efficiency: Premium design; guaranteed minimum values determined in accordance with IEEE Standard 112, Test Method B including stray load loss as follows:

HP	Synchronous RPM			
	3,600	1,800	1,200	900 and Less
20 - 49	91%	92.4%	92.4%	90.2%
50 - 99	92.4%	93.6%	93%	93%
100 and Above	94.1%	95%	94.1%	93%

C. For motors rated 1 to 19 HP, provide efficiency in accordance with ASHRAE Standard 90.1 - 1989, Table 5-1.

1.05 Submittals

A. Submit shop drawings showing certified dimensions and nameplate data.

B. Submit expected and guaranteed minimum efficiency values for operation at 100, 75, 50 and 25 percent load.

Part 2 Products

2.01 Acceptable Manufacturers

Motors shall be manufactured by General Electric, Reliance, Toshiba, Siemens, or Teco-Westinghouse.

2.02 Ratings

A. Horsepower (HP): As noted. Where no value is noted, match the requirements of the driven equipment.

B. Phase

1. Less than 1/2 HP: Single phase.

2. 1/2 HP and Larger: Three phase.

C. Voltage

1. Single Phase Motors: 115/200/230 volt reconnectable. Exception: Single voltage motors will be permitted if the voltage matches the supply characteristics shown on the Electrical Drawings.

2. Three-Phase Motors: 200/230/460 volt reconnectable. Exception: Single voltage motors will be permitted if the voltage matches the supply characteristics shown on the Electrical Drawings.

D. Speed, Revolutions Per Minute (RPM): As noted. Where no value is noted, match the requirements of the driven equipment.

E. Torque and Starting Current: NEMA design B unless otherwise noted. Exceptions: Provide NEMA design C or D where required by the driven equipment. Unless specifically noted NEMA design A motors are not acceptable.

F. Service Factor: 1.15.

G. Insulation and Temperature Rise: Except as noted, Class B or Class F insulation with temperature rise, measured by resistance, corresponding to the insulation class in accordance with NEMA standards for operation in a 40 degree C ambient.

2.03 Construction

A. Enclosure: Totally enclosed fan cooled (TEFC) unless otherwise noted.

B. Windings: Copper. Exception: Aluminum windings are acceptable where the aluminum to copper transition is done by the manufacturer with copper leads brought out to the motor conduit box.

C. Bearings: Minimum 100,000 hours for direct coupled and 40,000 hours for belted applications B-10 life rating per AFBMA standards.

D. Multispeed Motors: Two-winding type.

E. Starting: Suitable for full voltage starting.

2.04 Accessories

A. Provide lifting eyes for 182 and larger frame size. Provide oversized conduit box for 250 and larger frame size.

B. Where noted provide normally closed thermostat for winding protection.

C. Where noted provide 120 volt, single phase space heater. Size heater to increase motor temperature approximately 10 degrees C above ambient.

D. Nameplate: Permanently affixed and stamped so as to permit recovery of the nameplate data in the event the nameplate is painted over.

Part 3 Execution

3.01 Installation

A. Verify clearances and alignment prior to operation.

B. Lubricate in accordance with the manufacturer's instructions.

C. Check rotation and correct as necessary. Make correction to preserve conductor color coding.

END OF SECTION

Part 1 General

1.01 Scope

A. Hinged cover enclosures.

B. Cabinets.

C. Terminal blocks and accessories.

1.02 Submittals

A. Submit product data.

B. Shop Drawings for Equipment Panels: Include schematic diagram, wiring diagram, outline drawing and construction diagram as described in NEMA ICS-1.

Part 2 Products

2.01 Acceptable Manufacturers

Cabinets and enclosures shall be equal to Crouse Hinds, Hoffman or Weigmann.

2.02 Hinged Cover Enclosures

A. Construction: NEMA 250; 10 gauge steel, no knockouts, wall mounted or free-standing as indicated. Free-standing enclosures are minimum 20-inches deep. Unless otherwise noted, enclosures are NEMA 1A for indoor dry locations and NEMA 3R for outdoor, wet or damp locations.

B. Finish: Baked on enamel over a rust inhibitor.

C. Covers: Continuous hinge, held closed by hasp and staple for padlock. Furnish three point latch for free standing enclosures.

D. Panel for Mounting Terminal Blocks or Electrical Components: 14 gauge steel, white enamel finish.

2.03 Cabinets

A. Cabinet Boxes: Code gage galvanized steel. Provide 3/4-inch thick plywood backboard painted matte white, for mounting terminal blocks.

B. Cabinet Fronts: Steel, surface type with concealed trim clamps, concealed hinge and flush lock; finish in gray baked enamel.

2.04 Terminal Blocks and Accessories

A. Terminal Blocks: NEMA ICS-4; UL listed.

B. Power Terminals: One-piece phenolic closed-back type, with binding screw or stud terminal connectors, rated 600 volts.

C. Signal and Control Terminals: Modular construction type, channel mounted with marking strip; screw terminals, rated 300 volts.

2.05 Fabrication

A. Shop assemble enclosures and cabinets housing terminal blocks or electrical components in accordance with NEMA ICS-6.

B. Selectors and Indicators: Door mounted for indoor enclosures. For outdoor enclosures provide a separate, hinged, inner door (dead front panel) for device mounting.

C. Lace conductors with plastic ties to present a neat and orderly appearance. Provide nylon wrapping to protect conductors crossing hinges.

D. Provide protective pocket inside front cover with control wiring and panel layout diagrams.

Part 3 Execution

3.01 Installation

A. Install cabinets and enclosures plumb, anchor securely to wall and structural supports at each corner, minimum.

B. Provide accessory feet for free-standing equipment enclosures.

C. Extend conduits directly to cabinets and panelboards without using junction boxes or wireways.

END OF SECTION

Part 1 General

1.01 Scope

A. Power system grounding.

B. Communication system grounding.

C. Electrical equipment and raceway grounding and bonding.

1.02 System Description

A. The system consists of a ground grids for building grounding; ground clusters for supplemental electrodes; and connections thereto of structures, equipment and electrical systems.

B. This Section is intended to supplement the requirements of the NEC, particularly Article 250, and to differentiate among options allowed by the NEC. This Section is not intended to reiterate explicit requirements of the NEC.

C. Within this Section the following definitions apply:

1. Ground Grid: A horizontal loop, electrically and mechanically continuous; routed approximately three feet inside the building perimeter. Where any building dimension exceeds 100 feet provide cross ties spaced not farther than 50 feet apart connected to the perimeter loop and to each other at all points of intersection to form a grid.

2. Ground Cluster: An assembly of three or more driven ground rods; spaced not closer than eight feet apart; each rod connected to the others in a closed delta configuration; and providing a resistance to ground of not more than 10 ohms.

3. Connect or Bond: For underground or otherwise inaccessible locations - a permanent connection made by exothermic welding, brazing, or similar process. For exposed and accessible locations - a connection made with clamps, bolts or similar fittings approved for the purpose.

1.03 Submittals

Submit product data.

Part 2 Products

2.01 Materials

A. Bare Conductors: ASTM B-8; stranded; hard drawn copper. Size unless otherwise noted is #4/0 AWG.

B. Ground Rods: UL 425H; 5/8-inch x 8 feet; high strength steel core with metallically bonded copper jacket.

Part 3 Execution

3.01 Installation

A. Except as noted, use insulated ground conductors only where installed in a raceway. Use bare conductors for the ground grid, ground rod connections, and bonding of buildings, structures, etc. Where a bare conductor is installed in a raceway use only non-metallic raceways; do not install bare conductors in metallic raceways.

B. Either embed the ground grid in the concrete building foundation 2 to 4-inches from the bottom or bury the grid three feet deep in the earth. For each 100 feet or fraction thereof of ground grid conductor provide connections to earth by one of the following:

1. Where deep column footings (more than eight feet below grade) are used provide a vertical tap from the grid to the bottom of the footing.

2. Where only shallow footings are available connect the ground grid to a driven ground rod.

C. Drive ground rods so the top is 3 to 6-inches below finished grade. If rock is encountered then rods may be driven at an angle or grounding plates, as approved by the Engineer, may be used.

D. Construct ground clusters as follows: Start with three driven ground rods and measure the resistance to ground of each rod. If the parallel combination exceeds 10 ohms then add sections and drive the rods deeper, or drive additional rods until the specified value is obtained. Connect each rod to every other rod in the cluster. Exception: not more than three additional rods or sections (six total) are required for any one cluster.

E. Where bare conductors emerge from concrete encasement, provide a 4-inch length of Schedule 40 PVC conduit set in the concrete to protect the conductor.

3.02 Service Entrance Equipment

A. Bond service entrance equipment ground bus to the ground grid with a No. 4/0 conductor.

B. Provide one ground cluster outside the building at the closest practical location to the service entrance equipment and bond to ground bus with a No. 4/0 conductor.

C. If a metallic cold water pipe is available for a grounding electrode make connection on the street side and bond around the water meter.

D. Prior to energizing the system, remove the neutral link and meggar the system neutral. Repair any grounds then replace the neutral link.

3.03 Buildings

A. Bond all steel building columns to the ground grid.

B. Provide outside access to the ground grid every 100 feet (two locations minimum) or as indicated by means of a test well. Note locations on the as-built drawings.

3.04 Separately Derived Systems

A. Ground transformer enclosures and, where solidly grounded systems are indicated, the secondary neutral to one of the following:

1. The ground grid where transformer is located on the bottom floor.

2. The building steel.

3. Other electrode as permitted by NEC if none of the above are available.

3.05 Underground Distribution Systems

A. Route a bare conductor through each duct bank. Connect to building ground grid, equipment frame or ground pad as applicable.

B. Provide a driven ground rod at each electrical manhole. Connect to duct bank ground conductor accessible in the manhole.

C. Provide two ground clusters at opposite corners of pad transformers. Connect to transformer secondary compartment grounding lug. Bond primary and secondary ground lugs and duct bank grounding conductor.

3.06 Field Quality Control

A. Inspect grounding and bonding system conductors and connections for tightness and proper installation.

B. Notify the Owner's representative at least one week in advance that the ground grid for the building is ready for inspection. Obtain written notice to proceed before filling trenches, pouring slabs, or otherwise covering the work.

C. Compile and submit a list of ground resistance measurements for each ground rod in ground clusters. Measure and submit resistance to ground of service equipment ground bus.

D. Make resistance to ground measurements in normal, dry weather conditions not less than 24 hours after rainfall. Make measurements using the fall of potential method per IEEE Standard No. 142.

END OF SECTION

Part 1 General

1.01 Scope

Dry type two winding transformers.

1.02 Submittals

Submit product data. Include outline and support point dimensions of enclosures and accessories, unit weight, voltage, kVA, and impedance ratings and characteristics, loss data, efficiency at 25, 50, 75 and 100 percent rated load, sound level, tap configurations, insulation system type, and rated temperature rise.

1.03 Delivery, Storage and Handling

A. Store in a warm, dry location with uniform temperature. Cover ventilating openings to keep out dust.

B. Handle transformers using only lifting eyes and brackets provided for that purpose. Protect units against entrance of rain, sleet, or snow if handled in inclement weather.

Part 2 Products

2.01 Acceptable Manufacturers

Dry type transformers shall be equal to General Electric, Hevi-Duty, Siemens, Square D, or Cutler-Hammer.

2.02 Dry Type Transformers

A. Dry Type Transformers: NEMA ST-20; factory-assembled, air cooled dry type transformers; ratings as indicated. Transformers are two winding power type. Three phase units are connected delta primary and wye secondary. Scott or Tee connections and autotransformers are not acceptable.

B. Insulation: 220 degrees C, 150 degree C rise for ratings 30 kVA and larger; 185 degrees C, 115 degree C rise for ratings below 30 kVA.

C. Taps: Two, 5 percent below rated primary for ratings 15 kVA and smaller; six, 2-1/2 percent two above and four below rated primary for ratings larger than 15 kVA.

D. Ground core and coil assembly to enclosure by means of a visible flexible copper grounding strap.

E. Mounting: Transformers 75 kVA and less shall be suitable for wall, floor, or trapeze mounting; transformers larger than 75 kVA shall be suitable for floor or trapeze mounting.

F. Isolate core and coil from enclosure using vibration-absorbing mounts.

Part 3 Execution

3.01 Installation

A. Set transformer plumb and level. Clear walls and ceilings by at least 6-inches to allow for air circulation.

B. Use flexible conduit, two foot minimum length, for connections to transformer case. Make conduit connections to side panel of enclosure.

3.02 Field Quality Control

A. Check for damage and tight connections prior to energizing transformer.

B. Measure secondary voltage under normal load conditions and make appropriate tap adjustments.

END OF SECTION

Part 1 General

1.01 Scope

Panelboards.

1.02 Submittals

Submit shop drawings.

Part 2 Products

2.01 Acceptable Manufacturers

Equipment shall be manufactured by General Electric, Siemens, Square D, or Cutler-Hammer.

2.02 Panelboards

A. Panelboards: NEMA PB-1; UL 67.

B. Rating: Voltage and ampere ratings are shown on the Drawings. Unless otherwise indicated interrupting ratings (RMS symmetrical) are 14,000 amps for 480 volt panelboards and 10,000 amps for 240 and 208 volt panelboards.

C. Boxes: Code gauge galvanized steel; sized to accommodate devices indicated and afford wire bending space in accordance with NEC requirements.

D. Fronts: Surface or flush as indicated, door-in-door construction, finished in light grey enamel over a rust inhibitor. Furnish flush lock for fronts less than 48-inches high and vault type handle with three point catch for fronts 48-inches and higher. Key all locks alike.

E. Bus: Copper, arranged for bolt-on circuit breakers. Furnish insulated neutral bus and ground bus with main lug bonded to the box.

F. Circuit Breakers: NEMA AB-1; molded case type, thermal-magnetic trip with internal common trip on multipole breakers. Provide breaker fully rated for interrupting ratings noted; series ratings are not acceptable.

G. Provide engraved nameplates giving the voltage rating and panel designation as indicated. Provide a UL service entrance label for panelboards used as service entrance equipment.

H. Two Section Panels: Box and front same height each section.

I. Surge Protection: Where indicated provide transient voltage surge suppressor, UL listed in accordance with UL 1449 (2nd Edition); suitable for medium exposure level

ANSI/IEEE C62.41 Cat. C3 environments; total surge current shall not be less than 80 kA per phase or 40 kA per mode in accordance with NEMA LS-1. Provide surge suppressor with standard overcurrent protection (no fuses), integral disconnect and diagnostic indicating lights. Suppressor shall be installed either in the panelboard gutter unless space does not permit or panelboard UL label is voided – in which case furnish loose for field installation adjacent (less than five feet) to the panelboard. Suppressor shall be connected on the load side of the main disconnect device, as close as possible to the phase/neutral/ground conductors per manufacturer's recommendations.

Part 3 Execution

3.01 Installation

A. Install boxes so they are rigidly supported and correctly aligned. Select mounting height so that operating handles are not higher than 6 feet 6-inches nor lower than 24-inches above the floor.

B. For flush mounted panels provide a 3/4-inch empty raceway for each three unused spaces and spare poles. Terminate in a junction box located above the ceiling or other approved accessible location for future extension.

C. Prior to energizing panelboards clean out construction dirt and debris. Paint any scratches on the trims or dead front barriers. Meggar each phase to phase and ground to insure that no short circuits exist.

D. Adjust panel barriers so that no openings occur between them and the panel front. Provide filler plates and plugs as necessary to maintain dead front integrity.

E. Type directory cards with circuit loads and/or area served. Note spare circuits in pencil.

3.02 Field Quality Control

Measure steady state load currents at each panelboard feeder. Should the difference at any panelboard between phases exceed 20 percent, rearrange circuits in the panelboard to balance the phase loads within 20 percent. Take care to maintain proper phasing for multi-wire branch circuits.

END OF SECTION

Part 1 General

1.01 Scope

A. DC motors.

B. DC SCR drives.

1.02 Work Specified Elsewhere

Except as noted equipment specified in this Section is provided under other Divisions. Include, under this Division, receiving, storage and handling, wall or floor mounting of drive control panels (including equipment pads), and wiring.

1.03 Submittals

A. Submit shop drawings.

B. Submit installation instructions.

Part 2 Products

2.01 Acceptable Manufacturers

DC Motors and Drives to 5 HP: Allen-Bradley, General Electric, Reliance, Sieko.

2.02 DC Motors

A. Type: NEMA MG-1; continuous duty; shunt or stabilized shunt field winding. Permanent magnet field is acceptable for motors less than 1 HP.

B. Horsepower (HP): As noted. Where no value is noted match the requirements of the driven equipment.

C. Voltage

1. Less than 1 HP: 75 to 140 VDC armature; 50 or 100 VDC field.

D. Base Speed, Revolutions per Minute (RPM): As required by the driven equipment.

E. Torque: Constant torque capability from 0 to 100 percent of base speed. Constant horsepower capability from 100 to 200 percent of base speed.

F. Insulation and Temperature Rise: Except as noted Class B or Class F insulation with temperature rise, measured by resistance, correspond to the insulation class in accordance with NEMA standards for operation in a 40 degree C ambient.

G. Enclosure: Totally enclosed fan cooled (TEFC) unless otherwise noted.

H. Accessories

1. Provide lifting eyes for 182 and large frame size.

2. Nameplate: Permanently affixed and stamped so as to permit recovery of the nameplate data in the event the nameplate is painted over.

2.03 DC Drive Controllers

A. Type: SCR full wave rectifier capable of producing a variable voltage DC output suitable for operating the DC motor as specified above.

B. Ratings

1. Speed Range: Zero to 100 percent of base speed with a constant torque load by armature voltage control; 100 to 200 percent of base speed with a constant horsepower load by field weakening.

2. Efficiency: 95 percent minimum at 100 percent speed.

3. Service Factor: 1.0 continuous; 1.5 for one minute.

4. Speed Regulation: 5 percent from no load to full load by armature voltage feedback. Where noted provide tach feedback with regulation of 1 percent or better.

C. Equip drive with adjustments for minimum speed, maximum speed, acceleration-deceleration rate, and current limit.

D. Protective Features

1. Input molded case circuit breaker rated 22,000 AIC to disconnect the drive and control circuits.

2. Output contactor(s) to disconnect the armature and field when the drive is off.

3. Solid state protective circuits with diagnostic capabilities for over/under voltage, inverse time and instantaneous overcurrent, phase loss, and thermal overload.

E. Input Voltage and Phase

1. Less than 1 HP: 120 volt, single phase.

F. Enclosure: Unit mounted, NEMA 4X.

2.04 Controls

A. Provide the following door mounted operator control devices:

1. Local-Off-Remote selector switch for remote start/stop and remote speed control.

2. Manual start stop selector and speed adjustment knob.

3. Speed indicating meter.

4. Power on indicating light.

B. Provide the following for remote control interface:

1. Remote (auto) speed command, isolated 4-20 mA DC.

2. Remote start stop command, maintained dry contact, close to run.

3. Isolated 4-20 output signal for remote speed indication.

4. 120 volt, 10 amp dry contact for remote run indication; closed when running.

5. 120 volt, 10 amp dry contact for remote alarm indication; closed on occurrence of any fault condition.

6. Two 120 volt powered contacts, one closed when motor operates and one open when motor operates, for accessories.

2.05 Service Conditions

A. Operating Temperature: 0 to 40 degrees C.

B. Altitude: Up to 3,300 feet above sea level.

C. Relative Humidity: 0 to 90 percent.

D. Voltage Variation: +5 percent to -10 percent.

Part 3 Execution

3.01 Installation

A. Install in accordance with the manufacturer's instructions.

B. Verify motor alignment prior to operation.

C. Ensure adequate space for air circulation around drive ventilation openings.

END OF SECTION

Part 1 General

1.01 Scope

A. Interior luminaires and accessories.

B. Exterior luminaires and accessories.

C. Lamps.

D. Ballasts.

E. Poles.

1.02 Submittals

Submit product data. Include dimensions, accessories, installation and construction details, and photometric data.

1.03 Delivery, Storage, and Handling

Handle metal poles carefully to prevent breakage and damage to finish.

Part 2 Products

2.01 Acceptable Manufacturers

A. Fixtures: Equal to fixtures shown on Fixture Schedule on the Drawings.

B. Lamps: Equal to General Electric, Sylvania, Phillips Lighting.

C. Ballasts: Equal to General Electric, Advance, Universal.

D. Poles: Aluminum: Equal to Union Metal, US Pole, Hapco.

2.02 Interior Luminaires and Accessories

A. Provide fixtures as shown in the Lighting Fixture Schedule on the Drawings.

B. Provide fixture housings and frames to match the ceilings called for on the Architectural Drawings.

C. HID Luminaires: Pre-wired, with integral ballast.

2.03 Exterior Luminaires and Accessories

Provide low temperature ballasts, with reliable starting to -20 degrees F.

2.04 Lamps

A. General Use Incandescent Lamps: Inside frosted type, rated 130 volts.

B. Incandescent Reflector Lamps: Shape as scheduled, rated 130 volts.

C. Fluorescent Lamps: Cool white; all by same manufacturer.

D. Fluorescent PL Lamps: 2,700 degrees K, all by same manufacturer.

E. Metal Halide HID Lamps: Phosphor coated.

F. High Pressure Sodium HID Lamps: Clear, suitable for all burning positions.

2.05 Ballasts

A. Use ballasts designed to operate on the voltage to which they are connected.

B. Fluorescent Ballasts: UL 935, ANSI C82.1; labeled Certified Ballast Manufacturers (CBM) certified by Electrical Testing Laboratories (ETL); high power factor type (unless indicated otherwise). Use Class P ballast with sound rating "A" (unless otherwise noted). Use fixtures and ballasts designed and constructed to limit the ballast case temperature to 90 degrees C when installed in an ambient temperature of 40 degrees C.

C. HID Ballasts: UL 1029 and ANSI C82.4; constant wattage autotransformer (CWA) or regulator, high power factor type, (unless otherwise indicated). Use single-lamp ballasts with a minimum starting temperature of minus 30 degrees C and designed for installation in a normal ambient temperature of 40 degrees C. Use ballasts constructed so that open circuit operation will not reduce the average life. Provide High Pressure Sodium (HPS) ballasts with a solid-state igniter/starter with an average life in the pulsing mode of 10,000 hours at an igniter/starter case temperature of 90 degrees C. Average life is defined as the time after which 50 percent will have failed and 50 percent will have survived under normal conditions.

2.06 Lighting Poles

A. Hand Hole: 4 x 6.5-inch (round poles) and 2.5 x 5-inch (square poles) with removable weatherproof cover installed 18-inches above bottom of pole. Provide matching gasketed cover plate.

B. Anchor Bolts: As recommended by pole manufacturer. Provide template, flat washers, lock washers, and hex nuts for each pole.

2.07 Lighting Control

A. Provide a photo/time control center of the seven day calendar dial type suitable to operate mechanically held relays. Provide time switch with a function to prevent

energization of lighting for preset periods each day and permit different On-Off settings for each day of the week with provision for omitting selected days. When permitted by the time switch, the photocontrol operates the control center to energize whenever natural lighting falls below 25 footcandles.

B. Provide manual switching for each circuit to maintain lighting "ON" or "OFF" until manually returned to the "Automatic" position. Provide a case cover to provide external accessibility of the bypass switches.

C. Provide a spring driven timing motor to operate time switch controls at least 16 hours after power failure. Equip to transfer to synchronous motor drive and automatically rewind reserve on restoration of power.

D. Provide a photo-cell with the control center.

E. Provide the control center with the capability of controlling three circuits as described below:

1. Circuit A - Dusk (Photocell) On-Preset (Timeswitch) Off

2. Circuit B - Dusk (Photocell) On-Dawn (Photocell) Off

3. Circuit C - Preset (Timeswitch) On-Preset (Timeswitch) Off

Part 3 Execution

3.01 Installation

A. Install lamps in luminaires and lampholders.

B. Provide suspended fixtures with swivel hangers and threaded rod. For single-unit suspended fluorescent fixtures, provide twin suspension hangers.

C. Support surface lighting fixtures of more than 10 pounds in weight with threaded rods from the building structure.

D. HID Luminaires: Use power hook hangers rated 500 pounds minimum or provide safety chain between ballast and structure. Provide safety chain between reflector and ballast.

E. Luminaire Pole Bases: Size and constructed as indicated on Drawings. Project anchor bolts 2-inches minimum above base. Install poles on bases plumb; provide double nuts for adjustment. Grout around pole base.

F. Embedded Luminaire Poles: Depth as indicated. Install plumb.

G. Use belt slings or non-chafing ropes to raise and set pre-finished luminaire poles.

3.02 Relamping

Relamp luminaires at completion of work.

3.03 Adjusting and Cleaning

A. Clean lenses and diffusers at completion of work. Clean paint splatters, dirt and debris from installed luminaires.

B. Touch up luminaire and pole finish at completion of work.

C. Mount continuous rows of luminaires in straight line. Utilize alignment clips between reflectors, where applicable.

END OF SECTION

Part 1 General

1.01 Scope

Lightning protection system.

1.02 Related Work

Section 16455 - Grounding.

1.03 System Description

A. Provide lightning protection system consisting of lightning points mounted on building and penthouse roofs, interconnecting cable, ground drops and ground grid.

B. Provide ground drops as indicated, in 1-inch plastic pipe with cable supports every second floor and connect to ground grid.

C. Provide ground rods on 100 foot centers maximum around perimeter of buildings.

1.04 Quality Assurance

A. Conform to UL 96 and NFPA 78.

B. Provide UL master label on completed installation.

1.05 Submittals

Submit shop drawings. Include air terminal locations, cable routings, grounding electrode locations and bonding locations.

Part 2 Products

2.01 Acceptable Manufacturers

Lightning protection system shall be equal to Thompson Lightning Protection, Inc., Robbins Lightning, Inc., Independent Protection Company, Inc., or Harger Lightning Protection, Inc.

2.02 Materials

A. Air Terminals: 18-inch solid copper, pin type, 1/2-inch diameter above 75 feet above finished grade (AFG) and 3/8-inch diameter below 75 feet AFG.

B. Lightning Cable: Braided copper, 28 strand 14 gauge for vertical risers and all horizontal rings above 75 feet AFG, and 29 strand 17 gauge for horizontal rings below 75 feet AFG.

C. Ground Grid: 5/8-inch by 10 feet copperweld ground rods with two-bolt cast bronze clamps having a minimum length of 1-1/2-inch and employing stainless steel screw caps.

D. Cable fasteners shall be substantial in construction, electrolytically compatible with the conductor and mounting surface and shall be spaced according to UL 96 and NFPA Code requirements.

E. Bonding devices, cable splicers and miscellaneous connectors shall be of cast bronze with bolt pressure connections to cable. Cast or stamped crimp fittings are not acceptable.

F. All miscellaneous bolts, nuts and screws shall be brass, bronze, or stainless steel.

Part 3 Execution

3.01 Installation

A. The installation shall be accomplished by an experienced listed master installer of lightning protection equipment who is in good standing with Underwriters Laboratories.

B. All equipment shall be installed in a neat workmanlike manner in the most inconspicuous manner possible. The system shall consist of a complete cable network on the roof involving all air terminals, splices, and bonds with cable downleads routed concealed either directly in the building construction or in conduit to ground.

C. Downlead cables shall not be brought directly through the roof. Thru-roof connectors with solid rods or conduit through boot flashing shall be utilized for this purpose. Unless otherwise noted, all downleads shall be concealed.

D. Copper equipment shall not be connected to aluminum surfaces except by means of an LPI approved bimetal transition fitting. Lead coating is not to be accepted as a bimetal transition.

3.02 Coordination

A. The lightning protection installer will work with other trades to insure a correct, neat and unobtrusive installation.

B. It shall be the responsibility of the lightning protection installer to assure a sound bond to the main water service and to assure interconnection with other building ground systems, including both telephone and electrical.

END OF SECTION

Part 1 General

1.01 Scope

Fire alarm system.

1.02 System Description

Provide fully supervised fire alarm stations and, horn strobe units for use with Owner's existing system.

1.03 Regulatory Requirements

A. Installation subject to approval, inspection, and test of applicable regulatory agency.

B. Provide equipment listed by UL, tested by a nationally recognized fire test laboratory, and compatible with integrated fire alarm system.

1.04 Submittals

A. Submit shop drawings and product data.

B. Indicate system components, size of components, location, and provide full schematic or wiring system showing building and operation details.

C. Submit manufacturer's installation instructions.

1.05 Record Drawings

A. As listed in Article 1.04 plus maintenance and repair data.

B. The manufacturer shall submit, on completion of system verification, a point-by-point check list indicating the date and time of each item inspected and issue a certificate confirming that the inspection has been completed and the system is installed and functioning in accordance with the Specifications.

Part 2 Products

2.01 Acceptable Manufacturers

System shall be manufactured Gamewell.

2.02 Fire Alarm Boxes

A. Manual: Non-coded, surface mounted unless otherwise indicated, indicating operation physically until reset.

B. Contacts: Equipped with one set normally open contacts.

2.03 Alarm Devices

Horn Strobe Units: Parallel operation; surface mounted; with audio output of not less than 96 dBA at 10-feet on axis.

Part 3 Execution

3.01 Installation

A. Install fire alarm wiring in conduit. Minimum wire size is No. 14 AWG copper.

B. Fire alarm conductor terminations in control panel and annunciator panels to be made on terminal strips with separate point for each conductor. All such strips to be number identified as shown in wiring diagram attached to inside of door of control panel. Connect wiring neatly to terminal strips. Connect clip with nylon cable straps. Set up termination of cabling so that sections of the system may be isolated or shorted out for servicing.

C. Mount end-of-line resistor for each box circuit in separate box located not more than six feet above finished floor beyond the last manual alarm station or automatic initiating device in a circuit.

3.02 Field Quality Control

A. Have fire alarm equipment supplier make a thorough inspection of the complete installed fire alarm systems including all components to ensure the following:

1. Complete and functional system.

2. Underwriter's Laboratories requirements.

3. Installed in accordance with manufacturer's instructions.

4. Regulations covering supervision of components are adhered to.

5. Make changes necessary to conform to Items 1, 2, 3 and 4 with technical assistance from the manufacturer.

6. During the period of this inspection by the manufacturer, supply to the manufacturer one electrician and one apprentice.

END OF SECTION

Part 1 General

1.01 Scope

A. Provide all equipment, tools, rigging, and experienced technicians to ensure the completion of services as outlined herein.

B. A complete written report shall be furnished including a listing of equipment which needs repair, equipment settings, "As Found" and "As Left" condition, forms for breaker test, transformer test, etc., as required for pertinent data and acknowledgment that the work has been completed.

C. Applicable Codes, Standards and References

1. All inspections and tests shall be in accordance with the following codes and standards, except as provided otherwise herein.

a. National Electrical Manufacturer's Association (NEMA)

b. American Society for Testing and Materials (ASTM)

c. Institute of Electrical and Electronic Engineers (IEEE)

d. International Electrical Testing Association (NETA) Maintenance Testing Specifications - MTS-1989

e. American National Standards Institute (ANSI) - ANSI C2: National Electrical Safety Code

f. State and local codes and ordinances

g. Insulated Cable Engineers Association (ICEA)

h. Association of Edison Illuminating Companies (AEIC)

i. Occupational Safety and Health Administration (OSHA)

j. National Fire Protection Association (NFPA)

i. ANSI/NFPA 70: National Electrical Code

ii. ANSI/NFPA 70B: Electrical Equipment Maintenance

iii. NFPA 70E: Electrical Safety Requirements for Employee Workplaces

iv. ANSI/NFPA 78: Lightning Protection Code

v. ANSI/NFPA 101: Life Safety Code

D. Definitions

1. Low Voltage: 0 to 600 volts.

E. Suitability of Test Equipment

1. All test equipment shall be in good mechanical and electrical condition.

2. Split-core current transformers and clamp-on or tong type ammeters require careful consideration of the following in regard to accuracy:

a. Position of the conductor within the core.

b. Clean, tight fit of the core pole faces.

c. Presence of external fields.

d. Accuracy of the current transformer ratio in addition to the accuracy of the secondary meter.

3. Selection of metering equipment should be based on a knowledge of the waveform of the variable being measured. Modern digital multimeters may be average or rms sensing and may include or exclude the dc component. When the variable contains harmonics or dc offset and, in general, any deviation from a pure sine wave, average sensing, rms scaled meters may be misleading.

4. Field test metering used to check power system meter calibration must have an accuracy higher than that of the instrument being checked.

5. Accuracy of metering in test equipment shall be appropriate for the test being performed but not in excess of two percent of the scale used.

6. Waveshape and frequency of test equipment output waveforms shall be appropriate for the test and tested equipment.

F. Test Instrument Calibration

1. The testing firm shall have a calibration program which assures that all applicable test instruments are maintained within rated accuracy.

2. The accuracy shall be directly traceable to the National Institute of Standards and Technology.

3. Instruments shall be calibrated in accordance with the following frequency schedule:

a. Field Instruments: Analog - six months maximum; Digital - 12 months maximum.

b. Laboratory Instruments: 12 months.

c. Leased Specialty Equipment: 12 months (where accuracy is guaranteed by lessor).

d. Dated calibration labels shall be visible on all test equipment.

e. Records, which show date and results of instruments calibrated or tested, must be kept up-to-date.

f. Up-to-date instrument calibration instructions and procedures shall be maintained for each test instrument.

g. Calibrating standards shall be of higher accuracy than that of the instrument tested.

G. Acceptable Testing Companies

1. Hood, Patterson, Dewar, Inc. (404) 296-5995.

2. Westinghouse Electrical Corporation (404) 885-5418.

3. Cleveland Electric Company (404) 696-4550.

Part 2 Equipment Testing

2.01 Molded Case Circuit Breaker - 100 AMP and Above

A. Mechanical, Electrical, and Visual Inspection

1. Refer to the manufacturer's instruction manual.

a. Check breaker against single-line drawing or panel schedule for correct rating, conductor size, and feeder designation.

b. Clean breaker case and inspect for cracks, heat damage, or other defects.

c. Check external connections for tightness, and signs of overheating. Torque bolts to the manufacturer's specifications.

d. Remove breaker covers on unsealed units. Inspect internal components for conditions and check for tightness on removable trip units, fused breakers, etc. (Do not remove any cover or components of breakers which will void UL label.)

e. Operate breaker three times to ensure smooth operation.

2. Prior to the electrical and meggar test, disconnect all equipment, such as transformers, relays, control devices, etc., which could be damaged by the test.

   a. Check long-time delay at 300 percent of trip unit rating.

   b. Check short-time delay at settings, if applicable.

   c. Check instantaneous pick-up.

   d. Check ground fault pick-up and delay at settings, if applicable.

   e. Check contact resistance with a low resistance ohmmeter. (A millivolt drop test may be conducted.)

   f. Check breaker insulation resistance with a 1,000 volt DC megohmeter for one minute each.

      i. Phase to Phase - Breaker Closed.

      ii. Phase to Ground - Breaker Closed.

      iii. Across Contacts - Breaker Open.

   g. Check electrically operated breakers for proper operation, including auxiliary devices (ground fault, undervoltage trip, remote trip, etc.), when applicable.

   h. Check breakers with solid state trip devices with a solid state tester and by primary current injection in accordance with the manufacturer's recommendations.

2.02 Dry Type Transformers

A. Mechanical, Electrical, and Visual Inspection

1. Refer to the manufacturer's instruction manual.

   a. Torque all accessible bolted connections and ground connections in accordance with the manufacturer's specifications.

   b. Blow dirt out with compressed air and clean dust and dirt from transformer.

   c. Inspect transformer for adequate ventilation clearances.

   d. Check tap changer for proper operation and condition.

e. Inspect winding for signs of overheating, clogged airways, and damaged insulations.

f. Check transformer for physical damage and rust.

g. Inspect transformer for proper grounding and ground connection.

2. Prior to the electrical and meggar test, disconnect all equipment, such as transformers, relays, control devices, etc., which could be damaged by the test.

a. Record amp and volt readings.

b. Perform an Insulation Resistance Test, winding-to-winding, and winding-to-ground, in accordance with the manufacturer's recommendations.

2.03 Distribution Switchboards, Panelboards, Load Centers

A. Mechanical, Electrical, and Visual Inspection

1. Refer to the manufacturer's instruction manual.

a. Check nameplate information and compare to Drawings and Specifications.

b. Check breakers and switches against single line diagram or schedule for correct rating, conductor size, and feeder designation.

c. Vacuum and clean interior of enclosure. (If cleaning solution is used, use only type recommended by the manufacturer.)

d. Test operation of switches and inspect their contacts and operating mechanisms.

e. Inspect fuses for overheating and adequate spring tension. Record contact resistance of fuse to fuse holder.

f. Check interlocks for proper operation.

g. Inspect insulation.

h. Check tightness of bolted bus connections, breaker, switches and all accessible bolts. Torque to the manufacturer's specifications.

i. Inspect structure, frame, supports, barriers, bus connections, etc., for proper alignment and fit.

j. Check wire insulation for deterioration.

k. Check wire terminations for tightness.

l. Lubricate in accordance with the manufacturer's instructions. (Use only manufacturer's recommended lubricant.)

2. Prior to the electrical and meggar test, disconnect all equipment, such as transformers, relays, control devices, etc., which could be damaged by the test.

a. Check ammeter, voltmeter and other panel instruments with secondary standards.

b. Check bus insulation with a DC megohmmeter, phase-to-phase, and phase-to-ground for one minute each.

c. Perform Function Test of remote control and monitoring devices, such as shunt trips, indicating lights, alarms, etc.

d. Check and test breakers as indicated in the Breaker Section of these Specifications. (If cleaning solution is used, use only type recommended by the manufacturer.)

Part 3 Records and Reports

3.01 Reports

A. A testing service's standard report may be used, but should include a minimum of the following items:

1. Summary of Project.

2. Description of equipment tested, and name plate data.

3. Description of test.

4. Test results.

5. All tripping and clearing times, pick-up and delay settings, resistance measurements, etc.

6. All operational dimensions and tolerances.

7. All parts which should be replaced.

8. "As Found" and "As Left" conditions.

9. Acknowledgment in writing that each item listed in Part 2 has been completed.

10. Any obvious coordination or other problems.

END OF SECTION

Part 1 General

1.01 Scope

A. Work provided under this Division includes final system design implementation, furnishing all components, system programming and configuration, system installation services, required support services, and complete documentation for the Plant Control System (PCS). This work shall include all materials, labor, and tools required to fabricate, deliver, unload, handle, erect, adjust, field calibrate, and test a complete and operable PCS as indicated on the Drawings and Specifications. Install all panels and designated instrumentation devices and provide all mechanical and pneumatic interconnections between the various components and their local sources of supply.

B. The intent of these Specifications is for the System Manufacturer to provide a complete and operational PCS. Additional items of equipment, materials, or labor not specifically called for by these Specifications, which may reasonably be considered to make the system complete and operational, shall be supplied as part of this work.

1.02 Definitions

A. Provide: Furnish, install, and connect.

B. Product Data: Catalog cuts and descriptive literature.

C. Shop Drawings: Factory prepared documentation, specific to the installation.

D. Indicated: Shown on the Drawings.

E. Noted: Indicated or specified elsewhere.

1.03 Work Specified Elsewhere

A. Installation of Inline Instruments: Instruments such as venturi tubes, magmeters, and control valves, which are specified in this Division and mounted in process piping, are installed under other Divisions.

B. Vendor-Supplied Devices: Field instrumentation and panels supplied as part of mechanical equipment or equipment packages shall be furnished, installed, and calibrated under other Divisions.

C. Conductors: Discrete signal conductors, twisted pair analog signal conductors, and RTD conductors are furnished and installed under Division 16. All other instrumentation and signal conductors, including digital data conductors and fiber optic cables are furnished under this Division and installed under Division 16. Special cables for a particular instrument device which are specified in this Section are installed under Division 16.

D. Raceways: All raceways and pulling of conductors (including placement in cable trays) are furnished under Division 16.

E. Terminations: All power, control, and signal conductor terminations are provided under Division 16. This shall include, but not be limited to, terminations for all control panels. Termination of the RS-232 cables, RS-485 cables, Ethernet cables, fiber optic cables and other digital communication media shall be provided by the System Manufacturer under Division 17. HVAC control terminations are provided under Division 15. Interconnections between equipment and integral equipment control panels (e.g., packaged air compressors, etc.), are provided under the applicable equipment Section.

1.04 Plant Control System Description

A. The PCS consists of programming and configuration, operator interface, Plant Control Network, local control panels, field instruments and control devices, and other appurtenances noted in these Specifications.

B. Major components of the PCS are as follows:

Panel	Location	Area Controlled	New/Existing
HMI	Operator Control Room	All Areas	Existing
PGP-49400	Operator Control Room	All Areas	Existing
CP-40400A	Chemical Building	Fiber Optic Interface Box	Existing
CP-40411	Chemical Building	Sodium Hypochlorite System	New
LCP-SHCLR-TP	Chemical Building	SHCLR Transfer	New

C. The System Manufacturer shall integrate data from the motor protection relays and the power monitoring modules furnished under Division 16 into the plant control system. The System Manufacturer shall provide a separate monitoring graphic screen to view the data retrieved from the modules as shown on the Drawings.

D. Modifications to Existing Panels

1. When modifying existing panels, the System Manufacturer shall provide the required hardware and labor for installing all terminals, control system hardware, instrumentation devices, etc., including the termination of new signals in the existing panel.

2. The System Manufacturer shall investigate the existing control panel prior to modification. Any installed new components, sub-panels, etc., shall not block access to any existing instrumentation, control system hardware, or terminations. Existing documentation may be of some help to the System Manufacturer, but may not be completely correct. The System Manufacturer shall determine the existing wiring, logic, and functionality via a combination of field investigation and communication with plant operation and maintenance personnel. Existing wiring, logic, and functionality shall be documented by the System Manufacturer prior to any changes being made or wires being disconnected so that re-wiring can be completed accurately.

3. The modifications shall follow the general installation guidelines, where applicable, for new panels listed in Section 17100. Provide all nameplates, wire markers, wire duct, surge protection, and any additional components required by Section 17100 for new panels.

E. Programmable Logic Controller (PLC): Control logic shall be implemented in PLCs for System Manufacturer furnished local panels. Existing control and programming standards shall be followed. Manufacturer and model for new PLCs shall match existing plant equipment.

F. Digital System Hardware: No new digital system hardware is included in this phase. Any peripheral or auxiliary equipment required because of the expansion shall match the manufacturer and model of the existing equipment.

G. Digital System Software: No new digital system software is included in this phase. The existing HMI system software shall be modified and expanded to accommodate the new monitor and control requirements as specified on the plans and specifications. Existing control, display, alarming, and reporting standards shall be followed, including 3-D graphic display rendering consistent with current plant graphic operating displays.

H. The existing Plant Fiber Optic Network shall be extended to service the new areas as shown on the Control System Architecture Diagram, I-DT-03. F.O. cable and installation hardware shall match existing plant standards.

I. The System Manufacturer shall attend a one-day meeting with the Owner's personnel at the plant site to review the intentions for the graphic display additions and revisions to the plant control system HMI. This meeting shall take place before any graphic display development in order to minimize programming and configuration re-work.

1.05 Quality Assurance

A. The Contractor shall ensure that the PCS is an integrated system furnished by the System Manufacturer who shall provide all of the equipment and appurtenances, regardless of manufacture and be responsible to the Contractor for correct operation of the entire system.

B. The System Manufacturer shall be responsible for the detailed design implementation and the proper functioning of the PCS, programming and/or configuration of all digital hardware, preparation of required submittal data including operations and maintenance manuals, preparation of test procedures, factory and field tests, start-up including field calibration, operational demonstrations, providing technical supervision for installation and connections to equipment, and training of the Owner's operating personnel.

C. The System Manufacturer shall be regularly engaged in the type of work called for under these Specifications and must have capital facilities, personnel, plant, and service capabilities required to successfully perform the work. The System

Manufacturer shall employ competent personnel experienced in the design, manufacture, and programming of equipment and systems required. The System Manufacturer shall assign an experienced person who shall act as Project Manager. This person shall have responsible project experience on similar systems of a comparable complexity to that specified herein.

D. The System Manufacturer shall have in employment, a permanent field service organization capable of providing service and maintenance of the system.

E. The System Manufacturer shall have installed similar systems which have been in satisfactory operation to establish the reliability of the equipment proposed to be furnished.

F. All control panels furnished by the System Manufacturer shall be fabricated in the System Manufacturer's own panel shop. The System Manufacturer shall have achieved the following certifications and affiliations:

1. Control Systems Integrators Association certification.

2. Underwriters Labs, UL-508 panel shop certification.

3. Rockwell Automation Systems Integrator (RASI) Toolkit certification.

4. Wonderware System Integrator certification.

5. Endress+Hauser Qualified Service Professional certification.

G. Acceptable Manufacturer: M/R Systems, Inc., Norcross, Georgia

1.06 Submittals

A. The System Manufacturer shall make submittals in accordance with the requirements of Section 01340. The submittal shall be divided into separate sections as listed below. Refer to related work sections for additional requirements.

B. Field Devices: This Section shall include primary elements, transmitters, switches, analytical instruments, etc. List all dimensions, power requirements, enclosure types, ranges, and signal form or value. Provide data, including proposed length, on special cables required between sensing elements and electronics units and data on any special equipment used for calibration or maintenance of a particular device. Field device submittals shall also include specific data sheets for each device which shall contain the following information:

1. Tag number per Specifications and Drawings.

2. Manufacturer's complete model number with complete model number breakdown.

3. Input – output characteristics.

4. Range, size, and graduations.

5. Physical size with dimensions, NEMA enclosure classification and mounting details.

6. Materials of construction of all components.

7. Instrument or control device sizing calculations where applicable.

8. Certified calibration data on all flow metering devices.

9. Environmental requirements during storage and operation.

10. Power requirements.

C. Control Panels: This Section shall include dimensions, terminal block designations, front panel arrangement, back panel layout, and ladder logic diagrams for both PLC-based and discrete component type control panels, etc. Provide catalog sheets for all panel components, indicate ranges, and provide nameplate schedules. All connections for new instruments terminating in the System Manufacturer's panels shall be clearly shown. All devices installed in each panel or connected to each panel, shall be identified on the panel drawings by the tag number included in the Specifications and Drawings. Any miscellaneous equipment not clearly falling into one of the above volumes, including recommended spare parts list, shall be included in the control panel volume.

D. Loop Diagrams: This Section includes no more than 10 typical loop diagrams for approval of format only. The submitted loop diagrams shall represent different types of process measurements. Loop diagram examples are attached to this Section.

E. Factory Test: This Section shall include the witness test and final checkout procedural outline detailed in Article 3.04 – B.

1.07 Construction Documentation

The System Manufacturer shall provide loop diagrams to the Contractor. The Contractor shall provide loop diagrams to the electrical subcontractor. Loop diagrams shall be issued as a group with the delivery of their respective control panel or area instrumentation. Two sets of loop diagrams shall be issued to the electrical contractor and one set to the Engineer.

1.08 Record Documentation

A. General: Record documentation shall be provided in accordance with Section 01720. Additionally, provide all information listed in Article 1.06 above, corrected to reflect the system as installed. Include also any instruction books, operation manuals, and other information pertaining to service and maintenance. Bind record documents in 3-ring, hardback notebooks complete with tabs and index. Include name, address, and

telephone number for each manufacturer's service contact. For all major components, provide a recommended spare parts list.

B. Loop Diagrams

1. Provide an individual wiring diagram for each analog and discrete loop showing all terminations, terminal numbers, conductor numbers, cable numbers, the location of the DC power supply, power panel, and circuit numbers for all 120 VAC power to field instruments, MCC and bucket numbers for all 480 VAC power to motor operated valves, signal polarity, the location of any dropping resistors, surge protectors, shielding, grounding, etc. Devices shall be identified by the tag number included in the Specifications and Drawings. Cabling between sensors/elements and associated transmitter shall be included. The loop diagrams shall meet the minimum requirements of ISA S5.4 plus the requirements below.

2. Each loop diagram shall be divided into areas for identification of device locations (e.g. panel face, back-of-panel, field, etc.) Loop diagrams shall be on 11 x 17-inch drawings.

3. The loop number shall be incorporated into the loop diagram drawing number. If the System Manufacturer does not have any specific loop diagram drawing number requirements, the drawing number shall be the loop number (the drawing number for loop F-1004 would be 1004). If a requirement exists (one requirement may be to incorporate the project number XXXXXX), the loop number shall be included as the suffix. The drawing number for loop F-1004 would be XXXXXX-1004.

C. Instrument Hardware: Record documents shall include bills of material, front views, assembly drawings, component layout drawings and schematics, nameplates, schedules, electrical schematics, electrical connection diagrams, and tubing/piping connection diagrams. Electrical and piping connection diagrams shall show all terminations of equipment, complete with instrumentation, wire, equipment, and cable designations. Interconnecting diagrams shall be prepared in a neat and legible manner on 11 x 17-inch or 24 x 36-inch sheets.

D. Software Documentation: In addition to the hard copies of drawings, programming and literature generated specifically for the project, two sets of compact disks shall be provided to the Owner with copies of all custom files specifically created for the Project, including all panel drawings, I/O drawings, termination drawings, communication architecture drawings, data sheets, bills of material, operating procedures, etc. Additional files included in this set shall be PLC programs and copies of the operator interface software application program. Drawing format shall be AutoCAD latest version. All Drawings shall also be furnished as Acrobat *.pdf files. Include copies of all *.shp and *.shx files used in the AutoCAD drawings. Compact discs shall have a complete listing of their contents along with the names and version numbers of the software used to generate each file. Discs shall be clearly identified by the following:

1. Project Name

2. Volume Number

3. Labeled “AS-INSTALLED”

E. Configuration Documentation: Instrument Configuration and Calibration sheets shall be generated for all instruments requiring configuration and/or calibration. The intent of the Instrument Configuration and Calibration sheets is to provide all necessary information required to enable the Owner to calibrate and/or configure a replacement instrument identical to the original instrument. One sheet shall be provided for each instrument. The sheets shall be 8-1/2 x 11 inch size and shall be included in the O&M Manual. Each sheet shall list the instrument tag number (as depicted on the Drawings and Specifications), the date, the System Manufacturer company name and phone number, the name of the individual who filled out the sheet, the instrument manufacturer’s name and phone number, the complete model number, the calibrated range, and all configuration information.

1.09 Environment

A. Local Control Panels: Local control panels shall be capable of operating between 32 degrees and 120 degrees F and 5 to 95 percent relative humidity without condensation. A 120 VAC single-phase, three-wire grounded power source will be supplied.

B. Field Devices: Field devices shall be housed in NEMA 4X enclosures. Ambient temperature rating shall be suitable for the project locale. All enclosures, including field instruments and control panels, which are located out-of-doors shall be provided with adequate sunscreens.

1.10 Deliver, Storage, and Handling

A. After completion of shop assembly and tests, control panels shall be enclosed in heavy polyethylene envelopes to provide complete protection from dust and moisture. Desiccant materials shall be placed inside the envelope prior to sealing. The equipment shall then be mounted on skids, enclosed in protective boxes, and braced for final transport. Removable lifting rings shall be provided on all sections weighing more than 150 pounds to permit moving without removal of protective covering. Shipping weights shall be shown on shipping tags together with instructions for unloading, transporting, storing, and handling on the job site. If practical, termination cabinets shall be delivered first to permit field wiring to be complete and checked out before receipt of remainder of equipment. None of the control room equipment shall be delivered until the environmental services required by the Specifications and Drawings are available and operating in accordance with manufacturer’s specifications.

B. The Contractor shall be fully responsible for moving the equipment through new and existing facilities and setting it in the proper location.

1.11 Warranty

A. Warranty Period: In accordance with Division 1 and the following:

1. Corrective hardware maintenance shall be performed by a trained service technician specifically trained to service the equipment involved. The technician shall be available, on-site, within 24 hours after notification by the Owner.

2. Software maintenance shall be performed by suitably qualified individuals from the System Manufacturer's software service staff. Representatives from third party software sources may additionally be involved, but the System Manufacturer shall be represented at all times during on-site services. Software service representative shall be available for consultation within four hours and, if required, on-site within 16 hours after notification by the Owner.

3. Deliver a copy of all service reports to the Owner on the day the work is performed.

Part 2 Products

2.01 Equipment

A. Quality Standards: It is not the intention of these Specifications to detail every component, accessory, signal conditioning device, etc. that is required to provide a complete system. The System Manufacturer shall provide all required components, using equipment from established manufacturers with a proven history of service and support.

B. Electronic Equipment: All solid state, printed circuit boards and components shall be suitable for the specified environment. Provide complete circuit diagrams for troubleshooting and repair. All parts shall be replaceable with standard commercial components without degrading the performance of the completed assembly.

2.02 Spare Parts

A. The System Manufacturer shall supply spare parts for the Plant Control System.

B. The System Manufacturer shall provide a list of recommended spare parts being provided under this Division.

2.03 Substitutions

See Article 39 of the Instructions to Bidders.

Part 3 Execution

3.01 Installation

A. The System Manufacturer shall assign a full time representative to provide coordination and supervision of on-site PCS construction work. The individual is to be on-site during all times when PCS work is being done.

B. The system, peripherals, and accessory equipment shall be installed in accordance with the manufacturer's instructions and located as shown on the Drawings unless otherwise approved by the Engineer.

C. All work shall be executed in full accordance with all applicable codes and local rulings. Should any work be performed contrary to said rulings, ordinances, or regulations, the System Manufacturer shall bear the full responsibility for such violations and assume all costs arising therefrom.

D. The Contractor shall investigate each space in the building through which equipment must pass to reach its final location. If necessary, the manufacturer shall ship the equipment in sections sized to permit passage through such areas.

3.02 System Noise Rejection

A. Electrical isolation shall be provided between input systems and the processor units. Noise rejection for common mode shall be at least 100 decibels from 0 to 100 Hertz, and up to 175 volts. Normal voltage rejection shall be not less than 35 decibels at 60 Hertz.

B. All instrument signal wiring, control wiring, and AC control power wiring shall be protected against lightning, spikes, and other transient surges at all field and control panel termination points per the requirements of Section 17120.

3.03 Grounding

A. Bond all instrument and control panel enclosures to the power system ground.

B. Ground analog signal conductor shields at the control panel end only.

3.04 Tests and Acceptance

A. The equipment and programs shall be factory-tested prior to shipment for compliance with the conditions of this Section, these Specifications, and for environmental conditions.

B. Factory Testing: Factory-test setup shall demonstrate peripheral performance, including all displays and graphics. All discrete and analog points shall be verified. A 100-hour burn-in test shall be performed on all solid-state devices. The Owner

reserves the right to witness the factory tests. At least 20 days written notice shall be given to the Owner and the Engineer by the Contractor prior to the date of starting factory tests. Submit detailed witness test and final checkout procedural outlines for approval to the Engineer not less than 60 days prior to starting factory tests. Testing shall include the complete system with all cabinet doors in place and peripherals attached, for an agreed to period time, with documentation via periodic printouts.

C. After installation of the complete system, the System Manufacturer shall provide the services of a qualified systems engineer to test the complete system under the observation of the Owner or Owner's representative to verify that all functions specified are performed without error or malfunction. As a part of the test procedure, Contractor's personnel, when requested by the system supplier, shall cause each remote process to change state or value three times to verify all functions during the checkout period. This shall be repeated until the system performs correctly to the satisfaction of the Owner or Owner's representative.

3.05 Start-Up Assistance

The System Manufacturer shall provide the on-site services of a project engineer for a minimum of two weeks (10 days at 8-hours per day) for start-up assistance. The individual provided shall be familiar with the Project and with all software packages and supplied hardware. This individual shall be capable of modifying PLC programming or operator interface configuration during the start-up period.

3.06 Training

A. The cost of training programs shall be included in the Control Price. The training and instruction shall be directly related to the PCS being supplied.

B. The System Manufacturer shall provide the following training courses for designated Owner's personnel. The courses shall be taught by professional, full-time instructors. All course materials required to adequately support the material presented shall be included. The System Manufacturer shall bear the cost of student transportation, meals, and lodging for any courses taught away from the Owner's facility. The System Manufacturer shall set the schedule for all courses with the Owner at least 20 days prior to the proposed date.

1. Operator Familiarization

   a. Length: Four hours

   b. Number of Students: 5

   c. Location: Owner's plant site

   d. This course will be taught on-site to ensure that plant operating personnel will be thoroughly familiar with the control system as delivered.

END OF SECTION

Part 1 General

1.01 Scope

A. In general, simple analog and discrete control, logic and indication requirements are depicted on the Process and Instrumentation Diagrams (P&IDs) supplied as part of this package. Where additional information is necessary, it is included in the descriptions that follow.

B. The items described in Paragraph 1.02 are general loop requirements for typical plan unit operations. It is intended that these general requirements shall be followed where applicable.

C. The items described in Paragraph 1.03 are loop descriptions for typical plant unit operations. It is intended that these descriptions, in conjunction with the P&IDs, provide sufficient system configuration information for the majority of simple control systems. Where additional descriptions are necessary or where control logic deviates from the general and typical descriptions, it is described in the Paragraph 1.04.

D. Control Logic

1. All control logic shall reside in the PLC software.

2. All control logic setpoints shall be operator adjustable with password protection initially set at the Plant Manager level. Setpoints shall include all analog switch values for alarming and control interlocking. Hardcoded setpoints are not acceptable.

E. HMI Software Switch Setpoints

1. All analog inputs to the Plant Control System shall have a minimum of four software switches for simple alarming within the HMI software. Where software alarms are not specified elsewhere in this Specification, they shall initially be turned off or set for -5% (low alarm) and +105% (high alarm) of the signal range. This will minimize nuisance alarms during checkout and start-up.

2. All HMI software alarms shall be reviewed with the Owner during field checkout or start-up. The System Manufacturer shall adjust all HMI software alarm setpoint values as instructed by the Plant Manager. For critical alarms, the System Manufacturer shall configure the associated graphic symbol to flash or change color when in an alarm condition.

3. All HMI software alarms shall be operator adjustable with password protection initially set at the Plant Manager level, unless otherwise directed by the Owner.

1.02 Loop Descriptions - General

A. Equipment protection interlocks and safety interlocks (motor temperature and moisture switches, emergency stops, low-low level shutdowns, etc.), shall be

hardwired and shall not reside in the PCS. Hardwired equipment protection interlocks and safety interlocks shall be functional at all times, regardless of operating mode (HAND, AUTO, LOCAL, REMOTE, etc.) Equipment protection circuits shall be fail-safe, the circuit shall open to stop equipment.

B. All motor control logic in the PCS shall include COMMAND DISAGREE logic. The system shall generate a COMMAND DISAGREE alarm to alert the operator that a fault has occurred for any of the following conditions:

1. When a motor is called to run and no run feedback is received within a preset, adjustable period of time. This shall only be applied to those motors which have run feedback.

2. When a motor is running based on a manual command, or based on an automated sequence, and run feedback is lost for a preset, adjustable period of time. This shall only be applied to those motors which have run feedback.

3. When a motor is called to run based on a manual command, or based on an automated sequence, the feedback from a HAND/OFF/AUTO or similar field-mounted switch indicates that the unit is not in the AUTO mode. This shall only be applied to those motors which have UNIT IN AUTO feedback.

C. All control valve logic in the PCS shall include COMMAND DISAGREE logic. The plant system shall generate a COMMAND DISAGREE alarm to alert the operator that a fault has occurred for any of the following conditions:

1. When a valve is called to open and the open feedback is not received within a preset, adjustable period of time.

2. When a valve is called to close and the closed feedback is not received within a preset, adjustable period of time.

D. All analog inputs shall be monitored by the PCS to identify out of range signals (less than 4 mADC or more than 20 mADC). When the system detects an out of range signal which continues for more than five minutes, an alarm shall be generated. The alarm shall identify the particular analog signal which is out of range.

E. In general, all analog input scaling shall be performed in the PLC.

1.03 Loop Descriptions - Typical

A. Typical Motor Status Monitoring – Constant Speed Motors

1. Motor run (typically designated XI and annotated RUN) and overload (typically designated XA and annotated OL) status will be indicated in the plant control system.

2. Where conditions other than motor overload are sensed in the MCC (e.g., motor temperature or moisture switch activated), the fault condition is combined

with motor overload and the resulting fault (typically designated XA and annotated FAULT) status will be indicated in the control system.

3. Total unit run time (typically designated KQI and annotated RUNTIME) will be provided for the motor in the control system.

B. Typical Motor Status Monitoring – Variable Speed Motors

1. Motor run (typically designated XI and annotated RUN) and combination VFD fault and motor overload (typically designated XA and annotated FAULT) status will be indicated in the control system.

2. Where conditions other than VFD fault and motor overload are sensed in the MCC (e.g., motor temperature or moisture switch activated), the fault condition is combined with motor overload and VFD fault and the resulting fault (typically designated XA and annotated FAULT) status will be indicated in the control system.

3. Total unit run time (typically designated KQI and annotated RUNTIME) will be provided for the motor in the control system.

4. Variable speed drives generally have a LOCAL-OFF-REMOTE switch mounted on the drive cabinet for starting or stopping the drive of a LOCAL-REMOTE switch for speed control. Unless otherwise stated in the Project specific loop descriptions, a REMOTE contact from each switch shall be wired in series to provide an indication in the control system. Where UNIT IN REMOTE feedback (typically designated XI and annotated UNIT IN REMOTE) is required for a control loop, it will be shown on the P&IDs.

C. Typical Motor Control Logic

1. When two or more motors are being used in a single service (duplex pump station, triplex pump station, high service pumps, etc.) and are being controlled in the automatic mode, the control logic shall include run status monitoring for each motor along with monitoring of the control mode (manual, off or automatic) for each motor.

2. Prior to calling a motor to run, the control logic shall monitor the control mode of the motor. If the motor is not in the automatic mode, the control logic shall skip the motor and move on to the next motor in the control sequence. An alarm signal shall not be generated if the motor is not in the automatic mode.

3. Prior to calling a motor to run, the control logic shall monitor the control mode of the motor. If the motor is in the automatic mode, the control logic shall call the motor to run and shall monitor the run status feedback signal. If the run status feedback signal is not received within a predetermined amount of time initially set at 15 seconds, then a motor fault signal shall be generated and the control logic shall move on to the next motor in the control sequence.

D. Typical Motor Control Loop – Local/MCC HAND-OFF-AUTO Switch

1. When the HAND-OFF-AUTO switch is in the HAND mode, the equipment will run continuously regardless of the automatic control logic. In the HAND mode, personnel protective and equipment protective interlocks shall be enabled to shut down the equipment. In the HAND mode, the equipment will run even in the event of PLC or control system failure.

2. When the HAND-OFF-AUTO switch is in the OFF mode, the equipment will not run under any circumstances.

3. When the HAND-OFF-AUTO switch is in the AUTO mode, the equipment will run in response to a single automatic contact from PLC or hardwired logic functions.

4. Where UNIT IN AUTO feedback (typically designated XI and annotated UNIT IN AUTO) is required, it will be shown on the P&IDs.

E. Typical Motor Control Loop – Local/MCC LOCAL-OFF-REMOTE Switch

1. When the LOCAL-OFF-REMOTE switch is in the LOCAL mode, the equipment will run continuously regardless of the remote control logic. In the LOCAL mode, personnel protective and equipment protective interlocks shall be enabled to shut down the equipment. In the LOCAL mode, the equipment will run even in the event of PLC or control system failure.

2. When the LOCAL-OFF-REMOTE switch is in the OFF mode, the equipment will not run under any circumstances.

3. When the LOCAL-OFF-REMOTE switch is in the REMOTE mode, the equipment will run in response to a single remote contact from PLC or hardwired logic functions.

4. When UNIT IN REMOTE feedback (typically designated XI and annotated UNIT IN REMOTE) is required for a control loop, it will be shown on the P&IDs.

F. Typical Motor Control Loop – Local START-STOP Switch

1. The START-STOP switch is typically set up for three-wire momentary control logic.

2. In the event of loss of power, the motor must be manually restarted.

3. Hardwired START-STOP switches shall operate equipment even in the event of PLC or control system failure.

G. Typical Software Control Switches

1. Where an automatic control strategy is implemented in software and it is necessary to disable the automatic operation, a software HAND-OFF-AUTO switch (typically designated HS and annotated HAND-OFF-AUTO) may be provided on the P&IDs. In the AUTO mode, the automatic control logic operates the control system output. In the OFF mode, the control system output remains open. In the HAND mode, the output contact remains closed or is controlled by a software START-STOP switch.

2. Where no automatic control strategy is implemented in software, but it is necessary to disable the automatic operation elsewhere, a software ENABLE-OFF switch (typically designated HS and annotated ENABLE OFF) may be provided on the P&IDs. In the OFF mode, the output contact from the control system remains open. IN the ENABLE mode, the output contact remains closed.

3. Where a software START-STOP switch (typically designated HS and annotated START-STOP) is shown on the P&IDs, the control system shall provide one normally open contact which closes for an adjustable time period to start the equipment and one normally closed contact which opens for an adjustable time period to stop the equipment. Where an automatic control sequence interfaces with a hardwired START-STOP momentary logic circuit, the control system shall provide one normally open contact which closes for an adjustable time period to start the equipment and one normally closed contact which opens for an adjustable time period to stop the equipment.

4. When a software RUN-STOP switch (typically designated HS and annotated RUN-STOP) is shown on the P&IDs, the control system shall provide one normally open contact which closes for as long as the control system logic calls for the equipment to run.

5. Where a software OPEN-CLOSE switch (typically designated HS and annotated OPEN-CLOSE) is shown on the P&IDs, the control system shall provide one normally open contact which closes when the control system logic calls for the valve to open and another normally open contact that closes when the control system logic calls for the valve to close. The outputs remain closed until the valve has reached its new position, as confirmed by the valve limit switches.

   a. When the valve is fully closed or is traveling, the valve closed indicator in the plant control system, ZIC, shall be on. When the valve is fully open, the valve open indicator in the plant control system, ZIC, shall be off.

   b. When the valve is fully open or is traveling, the valve open indicator in the plant control system, ZIO, shall be on. When the valve is fully closed, the valve open indicator in the plant control system, ZIO, shall be off.

H. Typical Analog Loop – Indication and Alarm

1. Analog values (designated LI, PI, etc.), will be indicated in the control system. Readouts for pressure, temperature, flow and analytical loops shall be in engineering units based on the field transmitter range. Readouts for special analog loops, analog signals from equipment not supplied under Division 17, etc., will be listed in the Initial Software Settings list attached to this Section or described in the Project specific loop descriptions.

2. Required software alarm functions (designated LAL, TAH, AAL, etc.), derived from analog variables are shown on the P&IDs. Initial setpoints for software switches will be listed in the Initial Software Settings list attached to this Section or described in the Project specific loop descriptions.

I. Typical Analog Loop – Control and Alarm

1. All software PID (proportional, integral, derivative) controllers (designated LIC, PIC, FIC, AIC, PDIC) must show setpoint, process variable, and manipulated variable and allow access to tuning parameters from the operator interface software package. Any software controller shall have the capability of being placed in MANUAL mode and have the capability of manually adjusting the output in MANUAL mode from the operator interface software package. Indicator readouts for software PID controllers shall conform to the requirements given in the Typical Analog Loop – Indication and Alarm description above.

2. Required software alarm functions (designated LALL, TAH, AAL, etc.), derived from analog variables are shown on the P&IDs. Initial setpoints for software switches will be listed in the Initial Software Settings list attached to this Section or described in the Project specific loop descriptions.

J. Manual Analog Control Setting: Software manual analog control inputs (designated HIC) are shown on the P&IDs. Initial control ranges will be listed in the Initial Software Settings list attached to this Section or described in the Project specific loop descriptions.

K. Timer Control

1. Software time control functions (designated KIC or KC) are shown on the P&IDs. Initial time settings will be listed in the Initial Software Settings list attached to this Section or described in the Project specific loop descriptions.

2. Where times are used for cycle/duration control logic, the controlled unit will remain off for a preset, adjustable cycle time (designated KIC or KC and annotated CYCLE). At the end of the cycle time, the controlled unit will turn on for an adjustable duration time (designated KIC or KC and annotated DURATION). At the end of the duration time, the cycle timer resets and starts again.

L. Chemical Dosage Control – Metering Pump Chemical Delivery

1. The plant control system shall have a screen for input of each of the various metering pump full scale flows and other data required by the dosage calculation. After the operator calibrates or verifies the calibration of a particular metering device, the full scale flow value will be entered into the control system for use in calculating the dosage control output. The units of entry for the full-scale input data shall be the same as the units which are normally associated with the particular metering device calibration (GPH, lb/hr, etc.)

2. The operator will select a dosage value (in mg/l or ppm) in the control system using a software analog control input (designated HIC and annotated DOSAGE). The pacing signal for the pump is based upon the flow rate shown on the P&ID.

3. The plant control system calculates the required output signal to vary the metering pump speed to give the chemical flow rate required to maintain the desired chemical dosage (i.e., the dosage called for by the HIC settings). This value shall take into account the pacing flow rate and operator entered values for metering pump full scale flow and pounds of chemical per gallon of solution. Thus, assuming pump flow units of GPH:

$$\frac{\text{(Chemical dosage in mg/l) x (pacing flow in MGD) x 8.34 x 100 = \% output}}{\text{(lb. Chemical per gal. solution) x (pump full scale calibr. in GPH) x 24}}$$

where % output represents the percent output signal to the chemical metering pump.

M. Chemical Dosage Control – Gases

1. This Paragraph applies to chemical delivery systems for gaseous chemical feeders such as chlorinators, ammoniators, sulfonators, etc.

2. The control system shall have a screen for input of each of the various delivery systems' full scale flows. After the operator calibrates or verifies the calibration of a particular delivery system, the full scale flow value will be entered into the control system for use in calculating the dosage control output. The units of entry for the full scale input data shall be the same as the units which are normally associated with the particular delivery system calibration (lb/day).

3. The operator will select a dosage value (in mg/l or ppm) in the control system using a software analog control input (designated HIC and annotated DOSAGE). The pacing signal for the delivery system is based upon the flow rate shown on the P&ID.

4. The control system calculates the required output signal to vary the delivery system speed to give the chemical flow rate required to maintain the desired chemical dosage (i.e., the dosage called for by the HIC setting). This value shall take into account the pacing flow rate and the operator entered value for

delivery system full scale flow. Thus, assuming delivery system flow units of lb/day:

$$\frac{\text{(Chemical dosage in mg/l) x (pacing flow in MGD) x 8.34 x 100 = \% output}}{\text{(delivery system full scale output in lb/day)}}$$

where % output represents the percent output signal to the delivery system.

N. Chemical Dosage Control – Dry Chemicals

1. This Paragraph applies to chemical delivery systems for dry chemical feeders such as lime, potassium permanganate, powdered carbon, etc.

2. The control system shall have a screen for input of each of the various delivery systems' full scale flows. After the operator calibrates or verifies the calibration of a particular delivery system, the full scale flow value will be entered into the plant control system for use in calculating the dosage control output. The units of entry for the full scale input data shall be the same as the units which are normally associated with the particular delivery system calibration (lb/hr).

3. The operator will select a dosage value (in mg/l or ppm) in the control system using a software analog control input (designated HIC and annotated DOSAGE). The pacing signal for the delivery system is based upon the flow rate shown on the P&ID.

4. The control system calculates the required output signal to vary the delivery system speed to give the chemical flow rate required to maintain the desired chemical dosage (i.e., the dosage called for by the HIC settings). This value shall take into account the pacing flow rate and the operator entered value for delivery system full scale flow. Thus, assuming delivery system flow units of lb/hr:

$$\frac{\text{(Chemical dosage in mg/l) x (pacing flow in MGD) x 8.34 x 100 = \% output}}{\text{(lb. Chemical/cubic ft.) x (full scale feeder calibr. in cubic ft./hr.) x 24}}$$

where % output represents the percent output signal to the delivery system.

1.04 Loop Description – Project Specific

2001	Level-SHCLR Bulk Tank No. 1	I-200-01
2002	Level-SHCLR Bulk Tank No. 2	I-200-01
2003	Level-SHCLR Bulk Tank No. 3	I-200-01
2004	Level-SHCLR Bulk Tank No. 4	I-200-02

An ultrasonic transmitter shall be wired to the LCP. LEVEL shall be indicated on the HMI and on the local truck fill panel. LOW LEVEL and HIGH LEVEL shall be alarmed on the HMI. HIGH LEVEL shall be an input to the common truck fill panel alarm. MID LEVEL, set at 16', shall enable gravity feed to the Day Tank.

2005 Level-Spill Tank I-200-02

An ultrasonic transmitter shall be wired to the LCP. LEVEL shall be indicated on the HMI. LOW LEVEL and HIGH LEVEL shall be alarmed on the HMI

2006 Common Alarm-Truck Fill Panel High Level I-200-01

The local panel shall be wired to the LCP. Individual Bulk Tank Levels shall be indicated on the local truck fill panel. Any HIGH LEVEL alarm shall energize an alarm HORN, a STROBE light, and an alarm on the HMI. Pressing the ACKNOWLEDGE pushbutton shall silence the alarm HORN but the STROBE and HMI alarm shall remain energized until the condition returns to normal. Pressing the TEST pushbutton shall energize the STROBE and the HORN momentarily.

2007 Alarm-Eyewash Shower in Use I-200-01

A FLOW switch in each shower shall be wired to the LCP. EYEWASH IN USE shall be alarmed on the HMI.

2010 Level-SHCLR Day Tank No. 1 I-200-03
2015 Level-SHCLR Day Tank No. 2 I-200-03

An ultrasonic transmitter shall be wired to the LCP. LEVEL shall be indicated on the HMI and on LCP-SHCLR-TP. LOW-LOW LEVEL, LOW LEVEL, HIGH LEVEL, and HIGH-HIGH LEVEL shall be alarmed on the HMI. HIGH-HIGH LEVEL on the selected day tank shall be an interlock to prevent either transfer pump from running.

2011 Position-SHCLR Bulk Tank No. 1 Isolation Valve I-200-01
2012 Position-SHCLR Bulk Tank No. 2 Isolation Valve I-200-01
2013 Position-SHCLR Bulk Tank No. 3 Isolation Valve I-200-01
2014 Position-SHCLR Bulk Tank No. 4 Isolation Valve I-200-02

The vendor furnished ON/OFF control valve shall be wired to the LCP. VALVE IN REMOTE shall be indicated on the HMI. Valve OPEN-CLOSE shall be selected on the HMI. Valve FULLY OPEN shall be indicated on the HMI. Valve FULLY CLOSED shall be indicated on the HMI. HIGH LEVEL in the SHCLR Sump shall be an interlock to CLOSE the valve.

2016 Dosage-SHCLR to Filtered Water I-200-03

The operator shall set the desired DOSAGE on the HMI. DOSAGE shall be an input to the DOSAGE CALC. Flow pacing shall be an input to the DOSAGE CALC. The output of the DOSAGE CALC shall be adjusted for Chlorine Residual by summing it with the output of the trim limit block for the FW analyzer. The resulting signal shall become the SPEED DEMAND signal to the metering pumps.

2017	SHCLR FW Metering Pump No. 1	I-200-03
2018	SHCLR FW Metering Pump No. 2	I-200-03

The metering pump shall be wired to the LCP. IN REMOTE shall be indicated on the HMI. Pump START-STOP shall be selected on the HMI. Pump RUN status shall be indicated on the HMI. Pump RUN TIME shall be accumulated and displayed on the HMI. Pump FAULT shall be alarmed on the HMI.

2020	Level-SHCLR Sump	I-200-02

The vendor-furnished FCP shall be wired to the LCP. HIGH LEVEL shall be alarmed on the HMI and shall be an interlock to close the bulk tank isolation valves.

2021	SHCLR Sump Pump No. 1	I-200-02
2022	SHCLR Sump Pump No. 2	I-200-02

The vendor-furnished FCP shall be wired to the LCP. Pump RUN status shall be indicated on the HMI. Pump RUN TIME shall be accumulated and displayed on the HMI.

2023	Flow-SHCLR Gravity from Bulk Tanks to Day Tanks	I-200-02

The LEVEL in each of the SHCLR Bulk Tanks shall be evaluated. When the LEVEL is at 16 Ft. or greater, gravity flow can occur from the bulk tanks to the day tanks, energize the GRAVITY FLOW pilot light on LCP-SHCLR-TP and indicate on the HMI.

2024	Dosage-SHCLR to Settled Water	I-200-04
2026	Dosage-SHCLR to Settled Water	I-200-04
2028	Dosage-SHCLR to Settled Water	I-200-04
2033	Dosage-SHCLR to Settled Water	I-200-04
2035	Dosage-SHCLR to Settled Water	I-200-05
2037	Dosage-SHCLR to Settled Water	I-200-05

The operator shall set the desired DOSAGE on the HMI. DOSAGE shall be an input to the DOSAGE CALC. Flow pacing shall be an input to the DOSAGE CALC. The output of the DOSAGE CALC shall be adjusted for Chlorine Residual by summing it with the output of the trim limit block for the selected analyzer. The resulting signal shall become the SPEED DEMAND signal to the metering pumps.

2025	SHCLR SW Metering Pump No. 1	I-200-04
2027	SHCLR SW Metering Pump No. 2	I-200-04
2029	SHCLR SW Metering Pump No. 3	I-200-04
2034	SHCLR SW Metering Pump No. 4	I-200-04
2036	SHCLR SW Metering Pump No. 5	I-200-05
2038	SHCLR SW Metering Pump No. 6	I-200-05

The metering pump shall be wired to the LCP. IN REMOTE shall be indicated on the HMI. Pump START-STOP shall be selected on the HMI. Pump RUN status shall be

indicated on the HMI. Pump RUN TIME shall be accumulated and displayed on the HMI. Pump FAULT shall be alarmed on the HMI.

2031	SHCLR Transfer Pump No. 1	I-200-02
2032	SHCLR Transfer Pump No. 2	I-200-02

The MCC shall be wired to the LCP. LOCAL-REMOTE shall be selected on LCP-SHCLR-TP.
When in LOCAL, START-STOP shall be selected on LCP-SHCLR-TP.
When in REMOTE, IN REMOTE shall be indicated on the HMI. START-STOP shall be selected on the HMI.
Pump RUN status shall be indicated on the HMI and on LCP-SHCLR-TP. Pump RUN TIME shall be accumulated and displayed on the HMI. Pump FAULT shall be alarmed on the HMI and on LCP-SHCLR-TP. HIGH-HIGH LEVEL in the selected SHCLR Day Tank shall be an interlock to prevent the pump from running.

2040	Dosage-SHCLR to Raw Water	I-200-06
2042	Dosage-SHCLR to Raw Water	I-200-06
2044	Dosage-SHCLR to Raw Water	I-200-06

The operator shall set the desired DOSAGE on the HMI. DOSAGE shall be an input to the DOSAGE CALC. Flow pacing shall be an input to the DOSAGE CALC. The output of the DOSAGE CALC shall become the SPEED DEMAND signal to the metering pumps.

2041	SHCLR RW Metering Pump No. 1	I-200-06
2043	SHCLR RW Metering Pump No. 2	I-200-06
2045	SHCLR RW Metering Pump No. 3	I-200-06

The metering pump shall be wired to the LCP. IN REMOTE shall be indicated on the HMI. Pump START-STOP shall be selected on the HMI. Pump RUN status shall be indicated on the HMI. Pump RUN TIME shall be accumulated and displayed on the HMI. Pump FAULT shall be alarmed on the HMI.

2053	Free Chlorine-SW Injection Point 39	I-400-01
2054	Free Chlorine-FW Analyzer	I-900-01
2055	Free Chlorine-SW Injection Point 65	I-400-01

A new analyzer shall be wired to the LCP. Free Chlorine shall be controlled by a Reverse-Acting Proportional only controller. The signal from the transmitter shall be the PV for the controller. The operator shall enter the setpoint for the controller on the HMI. The output of the controller shall be an input to a -50% bias block. The output of the -50% bias block shall be the input to a trim limit block. The operator shall set the % trim limit on the HMI, initially ranged for 0 to 10 %. The trim limit block output shall not exceed the limit set by the operator. The output of the trim limit block shall be summed with the output of the DOSAGE calc block to become the SPEED DEMAND signal to the metering pump. Trim LIMIT REACHED shall be alarmed on the HMI.

2059	Select Analyzer for SHCLR to SW Trim	I-200-04
2060	Select Analyzer for SHCLR to SW Trim	I-200-04
2061	Select Analyzer for SHCLR to SW Trim	I-200-04
2062	Select Analyzer for SHCLR to SW Trim	I-200-04
2063	Select Analyzer for SHCLR to SW Trim	I-200-05
2064	Select Analyzer for SHCLR to SW Trim	I-200-05

The operator shall select which Cl2 Residual analyzer to use as trim for the metering pump dosage calculation.

2078	Position-SHCLR Day Tank No. 1 Fill Valve	I-200-03
2079	Position-SHCLR Day Tank No. 2 Fill Valve	I-200-03

A vendor-furnished control valve actuator shall be wired to the LCP.
When the LOCAL-REMOTE selector on the valve actuator is in the REMOTE position, IN REMOTE shall be indicated on the HMI and the valve may be controlled from the HMI or LCP-SHCLR-TP.
Valve FULLY OPEN shall be indicated on the HMI and on LCP-SHCLR-TP. Valve FULLY CLOSED shall be indicated on the HMI and on LCP-SHCLR-TP.
HIGH-HIGH LEVEL in the selected SHCLR Day Tank shall be an interlock to CLOSE the valve.

END OF SECTION

Part 1 General

1.01 Scope

Control panels.

1.02 Submittals

A. The Contractor shall furnish the following items from the system manufacturer for approval prior to fabrication:

1. Layout drawings of the front of the panel showing mounting dimensions for all instruments and associated hardware.

2. Assembly drawings shall include:

   a. Details of panel fabrication including outline dimensions and locations of rear of panel mounted equipment.

   b. Wiring layout.

   c. Wiring and tubing interconnection diagrams.

3. Electrical wiring and termination drawings.

4. Complete bill of materials describing all panel components, including manufacturer and complete model number for all components.

5. Catalog cut sheets for all panel components.

1.03 Record Drawings

Submit shop drawings as listed under Article 1.02 above plus operation and maintenance information.

1.04 Delivery, Storage and Handling

A. Wrap the completed panel in polyethylene plastic and crate in a wooden shipping crate with sufficient packing to avoid damage in shipment.

B. Support the base of the shipping crate with the cross members of sufficient strength and clearance to allow movement of the entire crated panel by forklift truck.

Part 2 Products

2.01 Enclosure

A. Provide wall mounted, stanchion mounted, free-standing, or walk-in enclosures as scheduled.

B. Provide NEMA 12 enclosures for control panels located indoors and NEMA 4X stainless steel for outdoor locations, unless otherwise noted.

C. In all NEMA 4X enclosures, provide a thermostatically controlled space heater and corrosion inhibitor blocks. Provide NEMA 4X rated devices on the front of the enclosure.

D. Free-standing enclosures shall be at least 20-inches deep.

E. NEMA 12 and General Purpose enclosures shall be fabricated from a minimum 14 gauge steel, unless noted otherwise, with all seams ground smooth, all corners rounded, and all flat surfaces smooth with no ripples, dimples, or surface imperfections and no screws, bolts, or nuts visible from outside. Provide panel stiffeners as required to provide a rigid, non-bowing surface. Thoroughly clean and degrease the steel shell before painting. Apply one coat of a rust inhibiting primer and two coats of air dry enamel or acrylic with flattening agent to produce a smooth semi-gloss finish. Colors are to be chosen by the Engineer.

F. Install a continuous hinged-front access door. For freestanding enclosures, furnish a three point latch. A single point latch is acceptable for wall-mounted enclosures. Wire door-mounted instruments and controls to stationary components with suitable flexible connections and protection where wiring crosses the hinge. Provide double or multiple doors as required for stability and smooth mechanical operation.

G. Terminate all tubing and electrical connections at the bottom of the panel to bulkhead fittings and terminal strips, with all external connections properly identified for field connections. Space shall be provided at the bottom of the panel for excess wiring to be laid out before landing on the associated field terminal strip. Space shall also be provided at the top and sides of the panel for routing cables entering from the top of the panel.

H. For panels with 120 VAC power supply, provide appropriately sized circuit breaker, single pole, 22,000 AIC, mounted in the rear of the panel to disconnect power. Mount an engraved nameplate (white letters, red background) to read “WARNING – This panel energized by foreign control power sources. Equipment will be live with panel disconnect in either on or off position”.

I. Internal panel sub-feeds of 120 VAC power shall be divided into separate circuits protected by properly sized circuit breakers or fuses. The following separate circuit divisions shall be provided:

1. Panel light(s) and panel fans (where used).

2. Each receptacle.

3. Power to the panel UPS (where supplied).

4. Thermostatically controlled heaters (where supplied).

5. Each power supply (including 24-volt power supplies, power supplies for PLCs, power supplies for fiber optic transceivers, etc.)

6. 120-volt power to field mounted instruments (each instrument shall be provided with a separate circuit).

J. Provide copper ground bus bars in the rear of the panel. All bus bars shall be bonded together. Ground bus shall be capable of accepting System Ground Grid connection and Power System Ground connection.

K. Provide 20 percent spare, contiguous panel/sub-panel mounting area to accommodate future panel expansion.

L. The system manufacturer shall investigate the space allocated for control panels on the accompanying Drawings and inform the Engineer of any potential problems.

M. If indicated in the control panel schedule, control panels shall be provided with a drip shield or heat shield.

1. A 304 stainless steel drip shield shall be provided to prevent ice buildup on the panel door, door hinges, and front of panel-mounted devices. Minimum overhang shall be one inch on the front and side of the panel.

2. 304 stainless steel heat shields shall be provided to prevent excess heat inside the panel. Shields shall be provided for the top, back, and both sides of the panel. Shields shall be mounted to provide one-inch air space between the shield and the panel. Each shield shall have the same height and width as the panel side being protected.

N. All indicator lights shall be push-to-test. In cases where it is not practical to use push-to-test indicator lights (Engineer's approval required), a lamp test circuit with a lamp test pushbutton mounted on the front-of-panel shall be provided. Pressing the lamp test pushbutton shall illuminate all indicator lights without interrupting control circuits.

Lamp Colors:	Red	Running, Open
	Green	Stopped, Off, Closed
	Amber	Alarm

O. Provide one 120 VAC duplex receptacle and fluorescent lights as scheduled. Incandescent lights may be used where panel size prohibits the use of fluorescent lights. Provide one standard on/off light switch for the lights. Receptacles and lights

shall be provided with a separate circuit breaker and shall be fed from the 120 VAC power supply to the panel. Receptacles and lights shall be fed from uninterruptible power supplies.

P. All PLC discrete outputs shall have interposing relays installed in the control panel.

Q. Where Intrinsic Safety (IS) barriers have been supplied as a means of providing electrical hazardous area protection for the associated field device, all IS barriers and associated IS wiring shall be separated by at least two inches of air space from all regular non-hazardous wiring inside the control panel. Per NEC Article 504-30, grounded metal or other insulated partitions with lesser distance requirements shall be permitted. IS wiring entering the control panel shall be located in dedicated conduits, which also shall be separated from any non-hazardous wiring. IS Barriers shall be located in electrical non-hazardous areas.

R. Conduits containing IS wiring where entering enclosures containing regular, non-IS wiring shall be externally sealed to prevent transmission of gases from hazardous areas. Conduit installation and sealing is to be provided under Division 16.

S. All FRP panels located in direct sunlight shall be provided with at least two coats of UV protective coating to prevent discoloration and cracking.

T. All control panels shall be with lockable with either a padlock or a lock installed in the door handle. All padlocks will be furnished by the Owner.

U. Front of panel devices, such as analog controllers or annunciators, that have rear mounted terminal strips shall be accessible without standing inside the control panel (i.e. they shall be mounted on the panel door or on swing-out panels).

2.02 Wiring

A. Install a minimum of #16 AWG copper stranded, 600 volt, extra flexible type for all control wiring 50 volts and above, and a minimum of #18 AWG twisted, shielded pair for analog signal conductors. Color code wires as follows:

1. Ground: Green.

2. Neutral: White.

3. Line Conductor (150 volts or less to ground): Black.

4. Control (150 volts AC or less): Red.

5. Control (150 volts DC or less): Blue.

6. Interlock control circuits supplied from external power source: Yellow or pink.

7. Intrinsic Safety Conductors: Light blue.

8. Signal, Shielded and Special Cables: Identify with wire markers.

B. Mark all wires with approved wire markers at all terminations, per Section 16195. Clearly mark all terminal blocks. Label all devices mounted on the steel sub-panel. All instrument and control devices located inside control panels shall have an engraved lamacoid nametag affixed on or near the device and shall bear the tag number and service description. Label all devices mounted on the panel front with engraved lamacoid nameplates. Nameplates shall be three-layer laminated plastic; black letters on a white background. Letter height to be 1/8-inch for individual devices and 1/4-inch for panel designation.

C. Neatly bundle and secure all wiring with plastic ties. Route back-of-panel wiring in slotted plastic wireways with snap-on covers.

D. Terminal blocks shall be provided for all field wiring connections to the panel, including shield terminals for shielded cables. Terminal blocks may be mounted horizontally or vertically and shall be easily accessible. Terminal blocks shall be DIN rail mounted, screw clamp, feed-through type with 600 volt minimum rating. A minimum of 20 percent extra terminals shall be provided on the terminal blocks. Each terminal shall be clearly and permanently marked. Provide fused terminal blocks for all 120 VAC discrete inputs and outputs. All terminal blocks shall be suitably sized for #12 AWG stranded wire. All terminal blocks shall be grouped apart, depending upon type of signal per Paragraph E below.

E. AC or DC power wiring shall not run in any raceway with any type of instrument wiring. Wiring is to be divided into categories and shall be carried in separate raceways. The minimum acceptable groupings are:

1. 120 VAC, 60 Hz AC power wiring and chart drive power wiring.

2. DC power to electronic instruments (not including loop powered instruments), contact closure input and output wiring.

3. All wiring carrying pulsed information.

4. Standard range analog DC signals, thermocouple and up to 200 mV DC signals.

5. All intrinsic safety (IS) wiring.

F. It is the responsibility of the system manufacturer to provide appropriate protection against transients and surges for all field wiring, interfacing with the control panels. This protection equipment shall reside in the appropriate control panel. All instrument analog signal wiring, data transmission wiring, and 120 VAC power supply wiring shall be protected against lightning strikes, and other transient surges at all control panel termination points. All control power wiring, AC control power wiring, I/O cabinet discrete input wiring and discrete output wiring which is routed outside of buildings shall be protected against lightning strikes, and other transient surges at all control panel termination points. Lightning and surge devices shall protect the system from induced surges in analog, discrete and control circuitry and power supply lines. The protective devices shall not interfere with the normal operation of the panel hardware and shall be designed not to have a maximum clamping voltage in excess of what the protected device is capable of withstanding. Protection devices for all internally

mounted power supplies shall be installed on individual 120 VAC supply wiring. Each surge/lighting protector shall be independently grounded to the panel ground bus. Protector mounting rail shall not be used to ground the protector.

G. The system manufacturer shall provide required hardware and labor for termination of new signals in existing termination cabinets where required. This hardware and workmanship shall match existing work with respect to method, materials, and workmanship.

H. Certification: All control panels furnished under this Section shall carry a UL label which certifies the control panel meets the requirements of UL-508A. Panels containing any Intrinsic Safety circuits shall meet the requirements of UL-698A.

2.03 Drawings

A. Panel Construction Drawings

1. Shop Drawings and Catalog Cuts: Provide detailed shop drawings and catalog cuts for all panels, instrument racks, and enclosures. Drawings shall show the location of all front panel and internal sub-panel mounted devices to scale and shall include a panel legend and bill of materials. Layout drawings shall show all major dimensions as well as elevations, in inches from the base up, of all rows of components.

2. The panel legend shall list and identify all front of panel devices by their assigned tag numbers, all nameplate inscriptions, service legends, and annunciator inscriptions. Tag number shall be as listed in the Specifications and Drawings.

3. The bill of materials shall include all devices, including those mounted within the panel that are not listed in the panel legend, and shall include the assigned tag number, description, manufacturer, and complete model number.

B. Panel Wiring Diagram

1. Provide complete terminal identification of all external primary elements, panels, and junction boxes that interface directly to the panel wiring being shown. Polarity of analog signals shall be shown at each terminal.

2. All external wiring that the electrical contractor must provide and install shall be shown as a dashed line. Special cables that are provided with the instrument shall be clearly identified.

3. Panel wiring diagrams shall identify wire numbers and types, terminal numbers, and tag numbers. Wiring diagrams shall show all circuits individually; no common diagrams will be allowed.

4. Provide panel power wiring diagrams for all panels. The diagrams shall include the grounding requirements.

C. Interconnecting Wiring Diagrams: Diagrams shall show all component and termination cabinet identification numbers and external wire, fiber, and cable numbers. This diagram shall be coordinated with the electrical supplier and shall bear its mark showing that this has been done.

2.04 Control Panel Schedule

Panel No.	Mounting Type	Enclosure Rating	Light/Receptacle	Heat Shield/ Drip Shield
CP-40411	Free-Standing	NEMA 12	Yes / Yes	No / No
LCP-SHCLR-TP	Wall Mount	NEMA 4X	No / No	No / No
LCP-SHCLR-TRUCK	Pipe Stand	NEMA 4X	No / No	No / Yes

Part 3 Execution

3.01 Testing and Calibration

A. Thoroughly shop test the completed panel. Confirm that all lamps burn. Remove, box, and label all parts that may come loose or detached in shipment, so that after installation they may be easily replaced.

B. Perform preliminary calibrations in the fabricator's shop, and final calibrations at start-up by qualified personnel.

END OF SECTION

Part 1 General

1.01 Scope

Comprehensive surge protection for all instrumentation devices supplied as part of these Specifications.

1.02 General

A. It is the responsibility of the system manufacturer to provide appropriate protection against transients and surges for all field instruments, field wiring, and devices interfacing with control panels. All instrument signal wiring, control wiring, telephone wiring, and data transmission wiring which enters or exits buildings shall be protected against lightning strikes, and other transient surges at all control panel termination points. All instrument signal wiring, control wiring, telephone wiring, and data transmission wiring which terminates out-of-doors shall be protected against lightning strikes, and other transient surges at all termination points. All AC control power wiring shall be protected against lightning strikes, and other transient surges at all control panel termination points. Lightning and surge devices shall protect the system from induced surges in analog, discrete, and control circuitry and power supply lines. The protective devices shall not interfere with the normal operation of the panel hardware and shall be designed not to have a maximum clamping voltage in excess of what the protected device is capable of withstanding.

B. All field instruments located indoors or out-of-doors provided by the system manufacturer under this Contract shall be supplied with surge protection for 120 VAC power to the instrument.

C. Surge protectors shall include a combination of surge suppression technologies including metal oxide varistors, gas discharge tubes, diodes, and 3AG size fuses for line-to-line and line-to-ground protection.

1.03 Submittals

Submit detailed product data.

Part 2 Products

2.01 Field Instruments – Analog Signals

A. Loop Powered Analog Instruments: All signal powered analog field instruments located out-of-doors shall be equipped with direct-mounted surge protectors which screw directly into the unused conduit entry hub or a conduit tee. Acceptable Manufacturer: Phoenix Contact Model S-PT1-2PE-24VDC.

B. Field Powered Analog Instruments: All field powered analog instruments located outside shall be equipped with surge protectors for both signal and power, mounted

in a NEMA 4X enclosure. Acceptable Manufacturer: Phoenix Contact BOXTRAB with individual protection for signal and power circuits.

2.02 Control Panels

A. All instrument analog signal wiring which enters or exits buildings or which terminates out-of-doors shall be individually protected against lightning strikes and other transient surges at all control panel termination points. Acceptable Manufacturer: Phoenix Contact PT 1X2 Series.

B. All instrument discrete signal wiring which enters or exits buildings or which terminates out-of-doors shall be individually protected against lightning strikes and other transient surges at all control panel termination points. Acceptable Manufacturer: Phoenix Contact PT 2X1 Series (Inputs) and PT 2-PE/S Series (Outputs).

C. All data transmission wiring which enters or exits buildings or which terminates out-of-doors shall be individually protected against lightning strikes and other transient surges at all control panel termination points. Acceptable Manufacturer: Phoenix Contact PT HF Series and D-UFB Series.

D. All 120 VAC power wiring to control panels whether located indoors or out-of-doors shall be individually protected against lightning strikes and other transient surges at all control panel termination points. Acceptable Manufacturer: Phoenix Contact PT 2-PE/S Series.

E. Surge protection shall be provided for all telephone connections. Acceptable Manufacturer: Phoenix Contact MT-2FM-RJ12 Series.

2.03 Antennas

RF surge protection shall be provided for all antennas. Acceptable Manufacturer: Phoenix Contact COAXTRAB Series.

2.04 Ethernet

Surge protection shall be provided for all copper Ethernet connections. Acceptable Manufacturer: Phoenix Contact D-LAN Series.

2.05 Miscellaneous Digital Equipment

Provide surge protection for all computers, printers, uninterruptible power supplies, digital equipment power supplies, PLCs, fiber optic modems, telephone modems, digital signal converters, and other miscellaneous digital hardware to include communications wiring and 120 VAC power supply wiring for each device. Acceptable Manufacturer: Phoenix Contact.

Part 3 Execution

3.01 Installation

A. Install all surge protection equipment in strict accordance with manufacturer's guidelines.

B. For surge protection devices located out-of-doors and for antenna surge protection, grounding shall use individual ground rods located as close to the surge protection devices as possible. The grounding conductor shall be sized in accordance with manufacturer's recommendations and be routed via the shortest path possible. Bends in the grounding conductor shall be avoided. If bends in the grounding conductor are unavoidable then the number of bends shall be kept to an absolute minimum.

C. Provide installation for all field mounted surge protection equipment. Provide all wiring terminations for surge protection equipment.

D. If a particular piece of equipment is protected by two surge protection devices in series, ensure that the resulting equipment protection is not diminished.

END OF SECTION

Part 1 General

1.01 Scope

General purpose control components for control panels.

1.02 Submittals

Submit product data.

Part 2 Products

2.01 General Purpose Control Components

A. Manual Operators: 30.5 mm, heavy duty, NEMA 4X, industrial grade pushbuttons and selector switches with octagonal ring; contacts rated 10 amps continuous, 6 amps break at 120 VAC. Provide flush head for “start” pushbuttons, extended head for “stop” pushbuttons, and spring return for “jog” selector switches. Acceptable Manufacturers: Allen-Bradley, Cutler-Hammer, General Electric, or Square D.

B. Pilot Lights: 30.5 mm, heavy duty, NEMA 4X, push to test, industrial grade transformer type pilot light with octagonal ring; 6 volt LED lamp. Acceptable Manufacturers: Allen-Bradley, Cutler-Hammer, General Electric, or Square D.

C. Elapsed Time Indicators: Six-digit, hour, non-reset, 3-1/2-inch square case: Acceptable Manufacturer: Equal to Yokogawa Type 240.

2.02 Relays

A. Motor Control Relays: Relays which interface with motor controls shall be heavy duty industrial grade; 600 volt; contacts rated 10 amps continuous, 6 amps break (5 and 3 amps respectively for time delay forms); 120 VAC; convertible contacts; coils suitable for continuous duty. Acceptable Manufacturers: Allen Bradley, General Electric, or Square D.

B. Non-Motor Control Relays: Non-motor control relays shall be double pole relay contacts, rated 10 amps at 120 VAC. Interposing relays for PLC discrete outputs may be single pole. Coil duty shall be continuous, with coil voltage suitable for application. Open contact breakdown voltage shall be 500 volt rms. Provide with polycarbonate dust cover, DIN rail mount socket and holddown spring. The unit shall have a minimum expected life of 100,000 operations at rated loads. Acceptable Manufacturer: Equal to Potter & Brumfield, Type KAP or KUP.

END OF SECTION

Part 1 General

1.01 Scope

Programmable logic controllers (PLC).

1.02 System Description

A. This Section covers the technical requirements for programmable logic controllers (PLC) that will receive discrete and analog inputs, and through the use of an internal ladder logic program, perform data handling, control, and I/O (input/output) functions.

B. The capabilities of the individual PLCs shall be as required to perform the control functions associated with the described control panel or system.

C. The system manufacturer shall determine the actual amount of memory and I/O necessary for each control panel to function as specified or shown on the Drawings. Each processor shall have 50 percent spare memory capacity (not less than 1K). Where rack type PLCs are used, each rack shall have a minimum of 10 percent spare I/O points per type (but not less than four discrete inputs, four discrete outputs, two analog inputs, and two analog outputs) and a minimum of 25 percent spare slots (not less than two).

1.03 Submittals

A. For each individual PLC, the following record documentation shall be furnished in addition to documentation requirements in other Sections:

1. Complete software documentation, including annotated ladder logic diagram printout. Printout shall include a complete set of comments identifying relays, function of logic blocks, I/O points, etc.

2. Narrative description of the sequence of operation. Description shall reference, as applicable, the ladder diagram.

B. For the PLC system, documentation shall consist of descriptive literature and installation, operation, and instruction manuals, and shall be included in prints for approval and prints for record. In addition, record drawings shall include PLC manufacturer's recommended list of spare parts with prices, and availability/cost of maintenance contracts and similar support services.

Part 2 Products

2.01 Acceptable Manufacturers

A. Programmable Logic Controllers shall be manufactured by: Rockwell Automation Allen-Bradley ControlLogix 1756-L61.

B. Program development software shall be as distributed by the PLC manufacturer.

2.02 Central Processing Unit (CPU)

A. The CPU shall contain the program memory in static RAM, PROM, or a combination of both.

1. Provide visual indication of backup battery status with alarm in the event of low battery voltage before battery failure.

2. Provisions shall be made for connecting an external DC voltage to the system to provide auxiliary protection for CMOS RAM memories.

B. At least 1,024 internal storage registers shall be available for data storage. These registers shall be independent of and in addition to program storage memory.

C. Software or key locking arrangement at the CPU shall prevent memory modification by unauthorized personnel.

D. The processor unit shall be expandable to at least 4,000 I/O points.

2.03 Input/Output (I/O) Devices

A. Discrete Inputs/Outputs

1. Discrete inputs and outputs shall be available in both 24 VDC and 115 VAC.

2. Discrete inputs shall be in the ON state if at least 78 percent of nominal voltage is present. Discrete inputs shall be in the OFF state if 20 percent or less of the nominal voltage is present.

3. Isolation between input, output, and logic voltage shall be at least 1,500 V RMS per NEMA standards via optical isolation.

4. AC discrete outputs shall be rated 20 amps inrush, 2 amps continuous. DC discrete outputs shall have a 2 amp rating. All outputs shall have 3 amp normal fuse protection.

5. Each discrete input and output shall have an LED or other visible indication of on/off status.

B. Analog Inputs/Outputs

1. Analog inputs shall be available in 4 to 20 mADC, 1 to 5 VDC, and 0 to 10 VDC. Analog outputs shall be available in 4 to 20 mADC, 0 to 10 VDC, and -10 to +10 VDC.

2. All of the above inputs and outputs shall have at least 11 bit resolution with an accuracy of ± 1 percent over the rated temperature range.

3. Isolation between input, output, and logic voltage shall be at least 1,500 VDC per NEMA standards via optical isolation.

4. Analog inputs shall be available in isolated and loop-powered versions.

5. All analog outputs shall be isolated.

C. All PLC terminal blocks shall be 300 V minimum NEMA rated, and accommodate at least two #14 gauge wires.

D. Marker strips shall be attached adjacent to the field wiring and the status indicating lights to allow easy identification of inputs and outputs by the user. These markers shall not change when devices are replaced during repair or maintenance. Color code marker strips according to voltage.

E. Field wiring shall not have to be removed in order to replace an I/O device during repair or maintenance.

2.04 Data Processing

A. The controller system shall have the ability to perform the following data processing functions without significantly slowing down or interrupting the logic processing:

1. The controller system shall be capable of storing, displaying, and printing messages containing numerical information, including information from timers, counters, math functions, and analog functions. These messages shall contain the full range of alphanumeric characters and shall be capable of assuming user required formats. Storage capacity of at least 64,000 characters in addition to program memory and storage registers shall be available for these messages.

2. Provide proportional, integral, derivative (PID) fixed point control with the ability to solve 32 PID loops at a repetition rate off one second.

3. The controller data storage system shall have the capability to store recipes and other information in a structured file system. The file system shall be accessible from the user program.

2.05 Program Development Software

A. Provide Windows XP Professional-based programming software.

B. Programming capabilities shall include the ability to alert the programmer to errors in order to prevent not closing logic circuits, entering non-allowable addresses, or missing addresses.

C. Programming field for each rung shall be at least 70 elements. Program changes shall be allowed element by element such as adding, deleting, or reversing (NO to NC) contacts without replacing an entire rung. It shall be possible to delete or insert entire rungs inside the program.

D. A search feature shall allow the operator to call up any contact or coil in the program by reference.

E. The controller system shall allow an operator to override inputs and outputs on or off from the development software.

F. The programming software shall have off-line, on-line, and monitor modes of operation, controlled by password to provide an additional tier of security.

1. Off-Line Mode: Normal programming shall be in the off-line mode. The PC shall not be connected to the control system for off-line programming.

2. On-Line Mode: In the on-line mode, the programming device shall be connected to the control system, and two-way communication shall exist between individual CPUs and the PC. On-line programming shall include the ability to make program edits, upload data and download data while the CPU is running. The status of contacts and coils in the ladder logic program shall be displayed on the PC. The PC shall display the current values of timers, counters, and internal registers, and the programmer shall be able to modify these values through the programming software while in the program display mode.

3. Monitor Mode: In the monitor mode the programming device shall be connected to the control system. The programming device shall be able to read from but not write to the CPU. The status of contacts, coils, timers, counters, and registers shall be displayed on the PC, but a programmer shall not be able to modify them.

2.06 Program Development PC

A program development PC is not included in the Project. It shall be the responsibility of the system manufacturer to supply a PC for its own use for the development of the PLC program.

Part 3 Execution

3.01 Installation

A. PLC equipment is to be mounted on the back panel of the local control panels, unless otherwise noted, and incorporated in the panel design by the system manufacturer.

B. The Contractor shall furnish the required footage for the data highway to the system manufacturer. Data highway conductors shall be furnished by the system manufacturer for installation by the Contractor.

C. Data highway routing shown on the Drawings is based on a loop feed system. Other configurations which meet the redundancy requirements specified above will be permitted so long as the Contractor provides any additional raceways or conductors required and coordinates all clearances, at no cost to the Owner.

END OF SECTION

Part 1 General

1.01 Scope

A. Primary Elements

B. Transmitters

C. Receivers

D. Analytical instruments

1.02 System Description

A. System consists of all field and panel mounted instrumentation devices as noted, complete with all necessary signal converters, isolators, amplifiers, power supplies, and other appurtenances necessary for interfacing with other components.

B. Except as noted, scale all indicators in engineering units.

1.03 Submittals

Submit product data.

Part 2 Products

2.01 Alarm Horn

A. Type: Electro-mechanical diaphragm.

B. Mounting: Outside or panel as required by schedule.

C. Housing: Die cast, with gray powder-coat paint.

D. Diaphragm Material: Stainless Steel.

E. Power: 120 VAC.

F. Sound Intensity: 100 dBa at 10 feet.

G. Area Classification: As required by schedule.

H. Schedule:

Tag	Mounting	Area Classification
XA-2006	Outside	Unclassified

I. Acceptable Manufacturer: Federal Signal Corporation Model 350 (for Unclassified Areas), Model 31X (for Class I, Division 1, Group D Areas).

2.02 Alarm Light - Strobe

A. Type: High-intensity strobe warning light.

B. Enclosure: Corrosion-resistant, NEMA 4X, suitable for outdoor service.

C. Area Classification: As required by schedule.

D. Power: 120 VAC.

E. Dome Color: Amber, blue, green, or red as required by schedule.

F. Schedule:

Tag	Mounting	Area Classification
XI-2006	Outside	Unclassified

G. Acceptable Manufacturers:

1. General Purpose Areas: Federal Signal Corporation Model LP3.

2. Class I, Division 2, Group D Areas: Federal Signal Corporation Model 151XST.

3. Class I, Division 1, Group D Areas: Federal Signal Corporation Model 27XST.

2.03 Chlorine Residual Analyzer

A. Type: chlorine analyzer with automatic self-testing diagnostic capabilities that performs a complete analysis of the sample every 2.5 minutes. The unit shall utilize the DPD colorimetric method.

B. Analyzer: The analyzer shall have a range of 0 to 5 mg/L, with automatic color and turbidity compensation. The unit shall have dual alarm outputs with individual, adjustable set points. The unit shall be able to be switched from analyzing free chlorine to total residual by changing the reagents.

C. Sample Conditioning Equipment: Provide pressure regulator, strainer kit and flow meter as required.

D. Enclosure: NEMA 12 for indoor locations and NEMA 4X for outdoor locations as required by schedule. Outdoor enclosures shall be supplied with a thermostat controlled space heater and corrosion-inhibitor blocks. Outdoor enclosures shall be provided with adequate sunscreens.

E. Accuracy: $\pm$ 5 percent of scale or $\pm$ 0.035 mg/L, whichever is greater.

F. Power: Provide standard 3-prong, 120 VAC male plug and three feet of power cord as scheduled below. Plug and cord shall meet Division 16 requirements.

G. Output: Isolated 4 to 20 mADC.

H. Schedule:

Tag	Mounting	Area Classification
AIT-2053	NEMA 4X	Unclassified
AIT-2054	NEMA 4X	Unclassified
AIT-2055	NEMA 4X	Unclassified

I. Acceptable Manufacturers: Hach Model CL17, Rosemount FCL.

2.04 Indicator – Digital – Panel Mounted

A. Type: Digital, microprocessor-based, configurable panel indicator for single analog input.

B. Display: LED, 3-1/2 digit, ½-inch display height. Engineering units with provision to scale input and place decimal point.

C. Enclosure: NEMA 4X for panel mounting.

D. Input: 4 to 20 mADC.

E. Power Supply: 120 VAC.

F. Read Rate: 2.5 per second.

G. Accuracy: ±0.1 percent of reading, ± 1 count.

H. Schedule:

Tag	Range	Units
LI-2001B	0 to 100	%
LI-2002B	0 to 100	%
LI-2003B	0 to 100	%
LI-2004B	0 to 100	%
LI-2010B	0 to 100	%
LI-2015B	0 to 100	%

I. Acceptable Manufacturers: Action Instruments, Kessler-Ellis, Precision Digital, Red Lion.

2.05 Level Transmitter - Ultrasonic

A. Type: Non-contact, ultrasonic, microprocessor-based with input or output filter capability.

B. Sensor

1. Mounting: The System Manufacturer shall coordinate mounting to ensure that the sensor is mounted away from vessel walls and other obstructions in accordance with the manufacturer's recommendations. The System Manufacturer shall provide appropriate standoff distance for sensor face from the highest liquid level to accommodate blanking distance.

2. Range: Sufficient range for the application.

3. Cable Length: Sufficient to connect sensor and transmitter.

4. Enclosure: NEMA 4X, rated for mounting in hazardous area as required by schedule.

5. Automatic Temperature Compensation: Required.

6. Face Material: CPVC or PTFE.

7. Process Connection: 8 inch ANSI flange.

C. Transmitter

1. Digital Indicator: Required.

2. Output: Isolated 4 to 20 mADC.

3. Enclosure: NEMA 4X, aluminum, polycarbonate, or fiberglass.

4. Power Supply: 120 VAC.

5. Accuracy: ±1.0 percent of calibrated range or better for ranges greater than 25-inches.

6. Mounting: Remote, 2" pipe.

D. Schedule

Tag	Level Range (Feet)	Indicator Scale Units	Location / Area Classification
LE/LIT-2001	0 to 23	Feet	Outside / Unclassified
LE/LIT-2002	0 to 23	Feet	Outside / Unclassified
LE/LIT-2003	0 to 23	Feet	Outside / Unclassified
LE/LIT-2004	0 to 23	Feet	Outside / Unclassified
LE/LIT-2005	0 to 23	Feet	Outside / Unclassified
LE/LIT-2010	0 to 5	Feet	Outside / Unclassified
LE/LIT-2015	0 to 5	Feet	Outside / Unclassified

E. Acceptable Manufacturers: Siemens Milltronics, Endress+Hauser.

2.06 Pressure Gauge

A. Type: Bourdon tube or bellows, as required by pressure range, with blowout protection. Provide glycerin filled gauge as required by schedule.

B. Dial: 4.5-inch, white face with black lettering.

C. Materials

1. Case: Phenolic.

2. Lens: Acrylic.

3. Bourdon Tube and Socket: 316 stainless steel (bronze and brass if diaphragm seal is used).

4. Movement: Stainless steel.

D. Accuracy: ±0.5 percent (Grade 2A).

E. Connection Size/Location: ½-inch/lower.

F. Snubber: 316 stainless steel as required by schedule.

G. Diaphragm Seal: As required by schedule, provide diaphragm seal with flushing connection:

1. Seal: Welded diaphragm.

2. Upper Housing Material: Carbon steel.

3. Lower Housing Material: 316 stainless steel.

4. Upper Connection: ½ inch NPT.

5. Lower Connection: 1 inch NPT.

6. Diaphragm Material: Titanium.

7. Fluid Fill: Glycerin.

H. Schedule

Tag	Pressure Range	Diaphragm Seal	Gauge Fill	Snubber Required	Pressure Sensor
PI-2008	0 to 30	Yes	Yes	No	No
PI-2019A	0 to 60	Yes	Yes	No	No
PI-2019B	0 to 60	Yes	Yes	No	No
PI-2030A	0 to 60	Yes	Yes	No	No
PI-2030B	0 to 60	Yes	Yes	No	No
PI-2030C	0 to 60	Yes	Yes	No	No

Tag	Pressure Range	Diaphragm Seal	Gauge Fill	Snubber Required	Pressure Sensor
PI-2030D	0 to 60	Yes	Yes	No	No
PI-2039A	0 to 60	Yes	Yes	No	No
PI-2039B	0 to 60	Yes	Yes	No	No
PI-2046A	0 to 60	Yes	Yes	No	No
PI-2046B	0 to 60	Yes	Yes	No	No
PI-2046C	0 to 60	Yes	Yes	No	No

I. Acceptable Manufacturers: Ashcroft, Dwyer, U.S. Gauge.

2.07 Restriction Orifice

A. Type: Concentric orifice plate. Dimensions in accordance with I.S.A. standards. Orifice bore tolerances in accordance with A.S.M.E. Fluid Meters Committee Report.

B. Plate Material: Titanium.

C. Orifice Flanges: By others.

D. Bore Size: By system manufacturer.

E. Handle: Stamped with tag, plate size, bore size, and date manufactured.

F. Schedule

Tag	Fluid / Line Size	Plate Size / Thickness	Inlet Pressure (PSIG)	Required Flow (GPM)	Required Pressure Drop (PSI)	Vent or Drain Hole
FO-2047	NPW / 1”	1” / 1/8”	100	60	75	None
FO-2048	NPW / 2”	2” / 1/8”	100	60	75	None
FO-2049	NPW / 2”	2” / 1/8”	100	60	75	None
FO-2050	NPW / 2”	2” / 1/8”	100	60	75	None
FO-2051	NPW / 2”	2” / 1/8”	100	60	75	None
FO-2065	NPW / 3”	3” / 1/8”	100	225	75	None
FO-2066	NPW / 1”	1” / 1/8”	100	60	75	None
FO-2080	NPW / 3”	3” / 1/8”	100	225	75	None

G. Acceptable Manufacturers: Daniel or Meriam.

2.08 Flow Transmitter - Positive Displacement

A. Type: Positive displacement oval gear meter, with pulse output and remote mounted indicating 4 to 20 mADC output.

B. Pulse Meter

1. Body: PPS.

2. Rotor: PPS.

3. Shaft: Hastalloy C.

4. O-Ring: Perfluoroelastomer.

5. Sensor: Reed Switch.

6. Connections: 1/4” NPT.

C. Transmitter: Remote mounted, 4 to 20 mADC output, loop powered.

D. Accuracy: + 1.0 percent of reading.

E. Repeatability: + 0.03 percent.

F. Schedule

Tag	Meter Size	Flow Range
FIT-2058		
FIT-2067		
FIT-2068		
FIT-2069		
FIT-2070		
FIT-2071		
FIT-2072		
FIT-2073		
FIT-2074		
FIT-2075		
FIT-2076		

G. Acceptable Manufacturers: GPI Model GM002/GX500.

2.09 Temperature Transmitter

A. Type: Microprocessor based “SMART” transmitter complete with integral 3-wire, 100 ohm platinum RTD element and integral indicator.

B. Accuracy: + 0.20 percent of calibrated span.

C. Output: Isolated, 4 to 20 mADC.

D. Power Supply: Loop powered 24 VDC.

E. Enclosure: NEMA 4X, low copper aluminum with epoxy polyester or polyurethane coating.

F. Accessories: Wall mounting bracket.

G. "U" Length: Per schedule.

H. Schedule

Tag	Calibrated Range	Indicator Scale Units	"U" Length	Location / Area Classification
TIT-2077	0 to 150 °F	°F	4"	Inside / Unclassified

I. Acceptable Manufacturers: Rosemount, Endress+Hauser.

Part 3 Execution

3.01 Installation

A. Locate field instruments so they are accessible for maintenance and orient so that indicators are readily visible. Unless otherwise indicated, mount instruments 36 to 60-inches above work surface. Provide 2-inch diameter, 304 stainless steel, Schedule 10 pipe welded to a 10-inch square by ¼-inch thick stainless steel base plate for support unless wall or other mounting arrangement is indicated. Space instruments at least ½-inch off concrete walls by stainless steel channels or phenolic spacers.

B. Provide stainless steel or aluminum sun screens or shades for all electronic instruments located outdoors.

C. Provide stainless steel identification tags attached with stainless steel wire or screws for all field instruments.

3.02 Tests and Calibration

A. Perform continuity tests on instrumentation conductors.

B. Calibrate each instrument to its published accuracy. Submit calibration sheets including the instrument tag number or name, the date, name of individual performing calibration, procedures and equipment used, and results obtained.

END OF SECTION

Part 1 General

1.01 Scope

This Section includes details of fabrication and installation for certain instrumentation hardware items.

Part 2 Products

2.01 Instrumentation Hardware

Refer to Instrument Installation Details.

Part 3 Execution

3.01 Installation

A. Install and align instruments in accordance with vendor instruction manuals and the Installation Details. Locate all field instruments to be accessible for maintenance.

B. Install all field-mounted instruments having indicators so as to make the scale visible from the adjacent operating area.

C. Provide sufficient clearances for access and instrument servicing to include dismantling of the instrument.

D. Space instruments at least 1-inch off walls using stainless steel channels.

E. Mount all field instruments securely, using manufacturer mounting yoke, when furnished, on a pipe stand to ensure a rigid, vibrant-free installation.

F. Locations of instruments shown on the Drawings are approximate. The Contractor may, at the Contractor's discretion, relocate instruments to more appropriate positions within five feet of the location shown on the Drawings.

G. Provide and install any necessary tubing raceways, supports, and tie downs. Tubing raceways and supports shall be of stainless steel construction.

H. Install tubing and fittings necessary to assure proper instrument operation in a neat, professional manner.

I. Provide all electronic transmitters which are located out-of-doors with adequate sunscreens.

END OF SECTION

Jordan, Jones & Goulding
6801 Governors Lake Parkway
Building 200
Norcross, Ga 30071
T 770.455.8555 | F 770.455.7391
www.jjg.com