FULTON COUNTY
DEPARTMENT OF PUBLIC WORKS
BIG CREEK BASIN TO COBB COUNTY DIVERSION FORCE MAIN

DISTRICT 1, SECTION 2, LAND LOTS 271, 272, 273 & 274

FEMA MAP

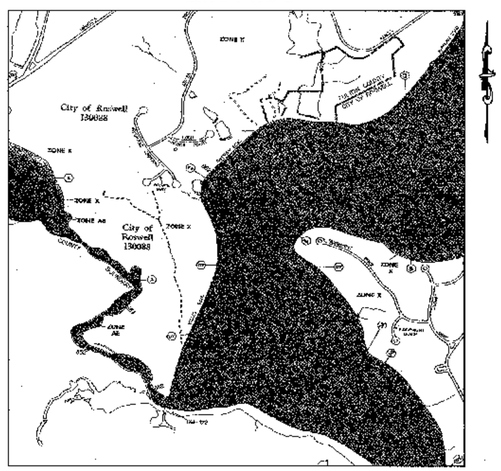

SCALE: 1"= 1000'

PROJECT SITE IS PARTLY IN A FLOOD PLAIN IN ACCORDANCE WITH F.I.R.M. PANEL NUMBER 13121C0132 E DATED JUNE 22, 1998

MAY 2007

FULTON COUNTY

LOCATION MAP

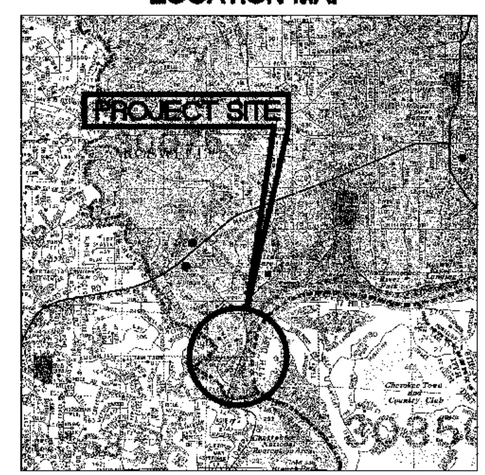

SCALE: 1"= 3000'

PERMITTING DISCLAIMER

THE APPROVAL OF THESE PLANS AND THE ISSUANCE OF THIS LAND DISTURBANCE PERMIT DOES NOT IN ANY WAY SUGGEST THAT ALL OTHER REQUIREMENTS FOR THE LEGAL OR APPROPRIATE OPERATIONS FOR THIS ACTIVITY, WHICH MAY REQUIRE ADDITIONAL PERMITTING, HAVE BEEN MET. THE ONUS IS ON THE OWNER/DEVELOPER/BUILDER TO DISCOVER WHAT ADDITIONAL PERMITING OR APPROVALS MAY BE NECESSARY TO OPERATE FROM THIS POINT IN AN APPROPRIATE AND LEGAL MANNER. PLAN APPROVAL OR PERMIT ISSUANCE DOES NOT ABSOLVE THE APPLICANT FROM COMPLYING WITH ALL APPLICABLE LAWS, POLICIES, STANDARDS OR OTHER PERMITS WHICH MAYBE REQUIRED FOR THIS PROJECT.

24 HOUR CONTACT PERSON

MIKE WALOCHIK, ENGINEER II
FULTON COUNTY GOVERNMENT CENTER
141 PRYOR STREET, SUITE 6001
ATLANTA, GEORGIA 30303
(404) 730-7400

SECTION	SIGNATURE	APPROVAL DATE
PLANNING		
DRAINAGE		
HYDROLOGY		
FLOOD PLAIN		
EROSION CONTROL		
WASTEWATER		
WATER		
LANDSCAPE/TREE PROTECTION		
TRAFFIC		
HEALTH		
RIVER CORRIDOR		

THE INITIALS (OR SIGNATURE) LISTED ON THE LINES ABOVE ATTEST TO THE FOLLOWING: THE REVIEW OF EACH SPECIALTY HAS BEEN COMPLETED AND THAT THE PROJECT DESIGN DEEMED TO BE ACCEPTABLE BY AN ENVIRONMENT AND COMMUNITY DEVELOPMENT PLANREVIEW STAFF MEMBER. THIS MEANS THAT THIS PROJECT IS FOUND TO BE IN COMPLIANCETO THE STANDARDS, RULES, REGULATIONS AND ORDINANCES OF FULTON COUNTY AND ALL OTHER LEGALLY BINDING STATUTES.

ALL EROSION AND SEDIMENTATION CONTROLS, AND TREE PROTECTION MEASURES SHALL BE INSTALLED PRIOR TO GRADING. NOTIFY INSPECTOR 24 HOURS PRIOR TO CONSTRUCTION.

INDEX OF DRAWINGS

DRAWING NO.	DESCRIPTION
C-01	COVER SHEET
C-02	GENERAL NOTES, ABBREVIATIONS AND LEGEND
C-03	GENERAL NOTES
C-04	PLAN AND PROFILE – PROPOSED 12" FORCE MAIN STA. 1+00.00 TO STA. 12+50.00
C-05	PLAN AND PROFILE – PROPOSED 12" FORCE MAIN STA. 12+50.00 TO STA. 25+00.00
C-06	PLAN AND PROFILE – PROPOSED 12" FORCE MAIN STA. 25+00.00 TO STA. 32+32.94
C-07	EROSION AND SEDIMENT CONTROL PLAN STA. 1+00.00 TO STA. 25+00.00
C-08	EROSION AND SEDIMENT CONTROL PLAN & DETAILS STA. 25+00.00 TO 32+32.94
C-08A	EROSION CONTROL NOTES AND LEGEND
C-09	STANDARD DETAILS
C-10	STANDARD DETAILS
C-11	STANDARD DETAILS
C-12	STANDARD DETAILS
C-13	TRAFFIC CONTROL PLAN
M/S-01	PROPOSED METER VAULT
S-02	STANDARD DETAILS
S-03	STANDARD DETAILS
E-01	ELECTRICAL LEGEND AND NOTES
E-02	SITE PLAN
I-01	METER VAULT – PROCESS AND INSTRUMENTATION DIAGRAM SYMBOLS AND NOMENCLATURE
I-02	METER VAULT – INSTRUMENTATION AND CONTROL

KHAFRA ENGINEERING CONSULTANTS, INC.
230 PEACHTREE STREET, SUITE 200
ATLANTA, GEORGIA 30303
404-525-2120 FAX 404-522-7941

PROJECT NUMBER: 01107 TASK 42

PROFESSIONAL SEAL

KHAFRA	FULTON COUNTY
GEORGIA REGISTERED No. 022064 PROFESSIONAL ENGINEER MICHAEL C. LEUNG 5/16/07	

GENERAL ABBREVIATIONS:

ASPH	ASPHALT DRIVEWAY
ARV	AIR RELEASE VALVE
BV	BUTTERFLY VALVE
BSIGN	BUSINESS SIGN
CL	CENTERLINE
CMP	CORRUGATED METAL PIPE
CONC	CONCRETE DRIVEWAY
DIP	DUCTILE IRON PIPE
E/S	EACH SIDE
ELM	ELM TREE
EMO	ELECTRIC MOTOR OPERATOR
EOC	EDGE OF CONCRETE
FH	FIRE HYDRANT
G	GAS LINE
GM	GAS METER
GV	GATE VALVE
GRAV	GRAVEL DRIVEWAY
LF	LINEAR FOOT
LP	LIGHT POLE
MB	MAILBOX
MCI	CABLE
OAK	OAK TREE
OH	OVERHEAD
PINE	PINE TREE
POWER	BURIED POWER
RCP	REINFORCED CONCRETE PIPE
R.J.	RESTRAINED JOINT
R/W	RIGHT OF WAY
SF	SQUARE FOOT
SMH	SANITARY MANHOLE
STA	STATION
VERT	VERTICAL
WM	WATER METER, WATER MAIN
WV	WATER VALVE
W	WATER

PIPING LEGEND

EXISTING	NEW	
		PIPE
		VALVE
		STEEL CASING
GV	GV	GATE VALVE
BV	BV	BUTTERFLY VALVE
FH		FIRE HYDRANT
		REDUCER
		BLOW-OFF
		AIR VALVE
		THRUST COLLAR (TC)
		THRUST BLOCK (TB)
		CAP
		PLUG AND THRUST BLOCK

LEGEND

EXISTING

PMH	POWER MANHOLE
SIGMH	SIGNAL MANHOLE
WV	WATER VALVE
WM	WATER METER
SS	SANITARY SEWER MANHOLE
	DROP INLET
	CATCH BASIN
	TRAFFIC SIGN
	POWER POLE
	GUY WIRE
	WEIR INLET
	HEADWALL
	LIGHT POLE
	MAIL BOX
08-17	TEMPORARY SURVEY CONTROL

GENERAL NOTES:

1. AREA OF DISTURBANCE IS 0.32 ACRE
3. AS-BUILT DRAWINGS ARE TO BE APPROVED BY COUNTY INSPECTOR. ALL APPLICABLE BONDS REQUIRED PRIOR TO ACCEPTANCE.
3. FIELD SURVEY WAS CONDUCTED BY Q-B ENGINEERING, INC. IN OCTOBER 2006 OTHER INFORMATION WAS BASED ON FULTON COUNTY GIS AND AS-BUILT RECORDS.
4. THE CONTRACTOR SHALL PROVIDE AND MAINTAIN THROUGHOUT CONSTRUCTION OFF-STREET PARKING FOR ITS CREW AS WELL AS FOR COUNTY REPRESENTATIVES.
5. ALL FILL AREAS MUST BE COMPACTED TO MINIMUM 95% STANDARD PROCTOR. A REPORT FROM A GEOTECHNICAL ENGINEER MAY BE REQUIRED BY THE INSPECTOR FOR ALL FILL AREAS WITHIN THE RIGHT-OF-WAY.
6. SILT BARRIERS ARE TO BE PLACED AS SHOWN AND/OR AS DIRECTED BY THE PROJECT ENGINEER AND/OR INSPECTOR.
7. WATER SERVICE FOR THIS AREA IS BEING PROVIDED BY FULTON COUNTY.
8. UPON REQUEST FROM ANY AGENT OR THE DIRECTOR OF ENVIRONMENT AND COMMUNITY DEVELOPMENT: A WRITTEN BI-WEEKLY REPORT SHALL BE SUBMITTED TO THE ASSISTANT DIRECTOR OF ENVIRONMENT AND COMMUNITY DEVELOPMENT, FROM THE COMMENCEMENT OF THE PROJECT, TO THE COMPLETION OF AND CONSTRUCTION. THIS REPORT SHALL BE THE RESPONSIBILITY OF THE OWNER OR DEVELOPER AND SHALL BE PREPARED BY A REGISTERED ENGINEER. THE REPORT SHALL INDICATE THE PROGRESS OF THE WORK, AND THE EFFECTIVENESS OF THE EROSION CONTROL DEVICES. (NOTE: FAILURE TO SUBMIT THIS REPORT SHALL BE CONSIDERED A VIOLATION OF THE CONDITIONS OF THE PERMIT.)
9. PRIOR TO THE ACCEPTANCE AND APPROVAL OF ANY ASPHALTIC CONCRETE BINDER AND/OR TOPPING WHICH IS INSTALLED FOR THE PURPOSE OF FULTON COUNTY MAINTENANCE, A REPRESENTATIVE OF THIS DEPARTMENT MAY REQUIRE ONE OR ALL OF THE FOLLOWING TEST: 1) CORING, 2) EXTRACTION, 3) COMPACTION, 4) DENSITY. THE FREQUENCY AND LOCATION OF THESE TESTS WILL BE LEFT TO THE DISCRETION OF THE INSPECTOR.

FULTON COUNTY MONUMENT DESCRIPTION

FCAZMK 444
LATTITUDE: 340000N, LONGITUDE: 0842300W, ELEVATION: 280M, D.1 S.2 LL 270 FULTON COUNTY
N 1457573.612, E 2229561.972, ELEVATION 1009.973
MARK IS AZIMUTH MARK FOR GPS STATION F 344 LOCATED IN NORTHERN FULTON COUNTY, GEORGIA AT NORTHWEST SIDE OF CHATTAHOCHEE RIVER NATIONAL RECREATION AREA. TO REACH MARK FROM INTERSECTION OF MARIETTA HIGHWAY AND COLEMAN ROAD, GO EAST ON MARIETTA HIGHWAY FOR 0.28 MI (0.45 KM) TO MARK ON LEFT IN CENTER OF MEDIAN. MARK IS ENCASED IN PROTECTIVE BOX WITH ACCESS OVER FLUSH GROUND 1.7 FT. (0.52 M) SOUTHEAST OF A WITNESS POST.
MARK IS 17.5 FT. (5.36 M) NORTH OF CENTERLINE EASTBOUND LANES OF MARIETTA HIGHWAY, 44 FT. (13.41 M) NORTH NORTHWEST OF EAST END STEEL GUARD RAIL ON SOUTH SIDE OF MARIETTA HIGHWAY, 67 FT. (20.42 M) SOUTH OF FIRE HYDRANT ON SOUTH SIDE MARIETTA HIGHWAY, 53.4 FT. (16.28 M) EAST OF EASTERNMOST MAPLE TREE IN LANDSCAPE AREA OF MEDIAN.

FCGPS 344
LATTITUDE: 340015N, LONGITUDE: 0842329W, ELEVATION: 279.9M, D.1 S.2 LL 233 FULTON COUNTY
N 1456625.518, E 2228454.931, ELEVATION 918.207
STATION LOCATED IN NORTHERN FULTON COUNTY, GEORGIA, AT NORTHWEST SIDE OF CHATTAHOOCHEE RIVER NATIONAL RECREATION AREA. TO REACH STATION FROM INTERSECTION OF MARIETTA HIGHWAY AND COLEMAN ROAD, GO SOUTH ACROSS INTERSECTION TO THE STATION IN FRONT OF CRABAPPLE GENERAL STORE AT 1050 MARIETTA HIGHWAY, 2.4 FT. (0.73 M) NORTHWEST OF A WITNESS POST.
STATION IS ENCASED IN PROTECTIVE BOX WITH ACCESS COVER FLUSH GROUND, 6.3 FT. (1.92 M) SOUTH OF BACK CURB ON SOUTH SIDE OF MARIETTA HIGHWAY, 68.3 FT. (20.82 M) WEST OF CENTER OF STEEL UTILITY POLE NUMBER MA 105A, 75 FT. (22.86 M) EAST OF RIGHT-OF-WAY MONUMENT, 104.2 FT. (31.76 M) NORTH OF NORTHEAST BRICK CORNER OF GENERAL STORE BUILDING.

SURVEY FOR BIG CREEK BASIN TO COBB COUNTY DIVERSION FORCE MAIN PROJECT WAS PREFORMED BY:
Q-B ENGINEERING, INC.
517 CEMETERY STREET
P.O. BOX 1508
NORCROSS, GA. 30091-1508
PHONE: (770) 449-8623
FAX: (770) 449-1088

GEORGIA REGISTERED No. 022884 PROFESSIONAL ENGINEER MICHAEL C. LEUNG 9/4/07

KHAFRA ENGINEERING CONSULTANTS, INC.
230 PEACHTREE STREET, SUITE 200
ATLANTA, GEORGIA 30303
404-525-2120 FAX 404-522-7941

DSGN	MCLG
DR	ELBN
CHK	MCLG
APVD	MCLG

NO.	DATE	REVISION	BY	APVD

REUSE OF DOCUMENTS
THIS DOCUMENT, AND THE IDEAS AND DESIGNS INCORPORATED HEREIN, AS AN INSTRUMENT OF PROFESSIONAL SERVICE, IS THE PROPERTY OF KHAFRA AND IS NOT TO BE USED, IN WHOLE OR IN PART, FOR ANY OTHER PROJECT WITHOUT THE WRITTEN AUTHORIZATION.

VERIFY SCALES
BAR IS ONE INCH ON ORIGINAL DRAWING
0 1"
IF NOT ONE INCH ON THIS SHEET, ADJUST SCALES ACCORDINGLY.

BIG CREEK BASIN TO COBB COUNTY DIVERSION FORCE MAIN

CIVIL
GENERAL NOTES, ABBREVIATIONS AND LEGEND

DWG NO. C-02
DATE MAY 2007
PROJ NO. 01107-42

GENERAL CONSTRUCTION NOTES:

1. AIR RELEASE VALVES SHALL BE LOCATED AT HIGHEST POINT OF CREST.
2. MINIMUM COVER FOR FORCE MAIN SHALL EQUATE TO A TOP OF PIPE ELEVATION 4 FEET BELOW EXISTING GRADE.
3. PIPE MAY BE DEFLECTED FOR CURVES. THE DEFLECTION HOWEVER, SHALL NOT EXCEED THAT AS SHOWN ON DETAIL 2 SHEET C-09.
4. A FULTON COUNTY REPRESENTATIVE MUST BE PRESENT WHEN WET-TAPPING IS TO BE UNDERTAKEN. CONTACT THOMAS CZECZIL @ (770) 410-3421 PRIOR TO SCHEDULING OF WET-TAPPING WORK.
5. LOCATION AND ELEVATION OF EXISTING UTILITIES SHOWN ARE APPROXIMATE AND MUST BE FIELD VERIFIED BY THE CONTRACTOR PRIOR TO CONSTRUCTION.
6. CONTRACTOR SHALL TAKE EXTRA EFFORTS IN PROTECTING AND/OR REPLACING LANDSCAPE TO ITS ORIGINAL CONDITION. SHRUBS WHICH ARE REMOVED AND REPLANTED SHALL BE WELL WATERED AND PROTECTED TO INSURE CONTINUED GOOD HEALTH AND GROWTH.
7. OLD ROSWELL RD., WILLEO RD. TIMBER RIDGE RD. AND ALL OTHER AFFECTED ROADS SHALL REMAIN OPEN TO TRAFFIC AT ALL TIMES DURING CONSTRUCTION. PROPER TRAFFIC CONTROL SHALL BE USED.
8. CONTRACTOR SHALL MAINTAIN TRAFFIC ACCESS TO ALL AFFECTED RESIDENTS, BUSINESSES AND PUBLIC FACILITIES AT ALL TIMES DURING CONSTRUCTION.
9. RESTORATION OF DISTURBED PAVEMENT ALONG THE ROADS SHALL BE PERFORMED IN ACCORDANCE WITH FULTON COUNTY STANDARD DETAIL NO. 905 OR CITY OF ROSWELL STANDARDS.
10. ALL VALVES & FITTINGS SHALL HAVE MEGALUGS FOR THRUST RESTRAINT.
11. CONTRACTOR SHALL PROTECT STREET INLETS FROM SILTATION BY PROVIDING "PIGS IN A BLANKET" AROUND OPENING, OR BY OTHER APPROPRIATE MEANS.
12. CONTRACTOR SHALL RESTORE ALL AFFECTED AREAS TO PRE-CONSTRUCTION CONDITION. THIS INCLUDES REMOVING ALL CONSTRUCTION DEBRIS, RESTORING THE ORIGINAL GRADE, GRASSING, REPLACING OR REPAIRING DRIVEWAYS, MAILBOXES, POLES, FENCES, ETC., THAT MAY BE DISLOCATED OR DAMAGED.
13. CONTRACTOR SHALL NOTIFY COUNTY INSPECTOR IN ADVANCE OF ANY UTILITY DISCONNECT. CONTRACTOR IS RESPONSIBLE FOR RECONNECTING ALL UTILITIES. THERE SHALL BE NO OVERNIGHT DISCONNECT.
14. CONTRACTOR SHALL SAW CUT EXISTING ASPHALT PAVEMENT PRIOR TO BREAKING AND REMOVING. LARGE PIECES OF BROKEN ASPHALT PAVEMENT SHALL NOT BE USED FOR BACKFILLING.
15. ALL STAGING AREAS SHALL BE WITHIN THE RIGHT-OF-WAY ALONG THE ROADS. NO CONSTRUCTION EQUIPMENT AND MATERIALS SHALL BE PLACED OUTSIDE THE R-O-W. THE CONTRACTOR SHALL BE RESPONSIBLE FOR THE MAINTENANCE AND PROTECTION OF ALL EQUIPMENT AND MATERIALS, AND PRODUCTS PLACED IN STORAGE. THE CONTRACTOR SHALL PROVIDE SAFETY FENCING AROUND THE STAGING AREA TO PROTECT PASSING MOTORISTS AND PEDESTRIANS. THE CONTRACTOR SHALL ALSO PRESERVE AND PROTECT EXISTING TREES AND PLANTS THAT MIGHT BE AFFECTED. THE CONTRACTOR SHALL BE REQUIRED TO TAKE NECESSARY STEPS TO MINIMIZE SILTATION AND SOIL EROSION IN THE AREA.
16. AT THE END OF EACH DAY'S OPERATION, THE CONTRACTOR SHALL THOROUGHLY CLEAN THE WORK SITE OF ALL DIRT OR DEBRIS, AND GENERALLY RESTORE THE SITE TO AN ACCEPTABLE CONDITION. UPON COMPLETION OF THE WORK, ALL EXCESS MATERIALS AND RUBBISH SHALL BE REMOVED FROM THE JOB SITE AND BE DISPOSED OF. THE SURROUNDING CONSTRUCTION AREA SHALL BE LEFT IN A CONDITION AS GOOD AS IT EXISTED PRIOR TO CONSTRUCTION.
17. CONTRACTOR SHALL TAKE TRAFFIC CONTROL MEASURES TO ENSURE SMOOTH FLOW OF TRAFFIC ALONG AFFECTED ROADS. CONTRACTOR SHALL PROVIDE TRAFFIC CONTROL DEVICES AND MANPOWER TO DIRECT THE FLOW OF TRAFFIC ALONG AFFECTED ROADS.
18. CONTRACTOR SHALL INSTALL DETECTION MARKERS ALONG PROPOSED LINES LINES 12 INCH AND SMALLER AT INTERVALS OF 100 FT, AND ON ALL BENDS. ELECTRONIC MARKERS SHALL BE COMPATIBLE WITH A SUBSITE EML 75R LOCATOR. MARKERS SHALL BE EQUAL TO 3M SCOTCHMARK FULL RANGE MARKERS #1252 OR EQUIVALENT.
19. ALL PIPING SHALL BE INSTALLED USING OPEN CUT UNLESS NOTED OTHERWISE.
20. USE FULTON COUNTY STANDARD DETAILS AND SPECIFICATIONS.
21. CONTRACTOR IS RESPONSIBLE FOR DISPOSING OF ALL CONSTRUCTION DEBRIS.
22. ALL CONSTRUCTION SHALL BE PERFORMED WITHIN PUBLIC RIGHT-OF-WAY OR EASEMENTS OBTAINED BY THE COUNTY.
23. PROVIDE CONCRETE ENCASEMENT FOR WATER MAINS CROSSING BELOW SANITARY SEWERS OR PASSING WITHIN 10' HORIZONTALLY OF A SANITARY SEWER. EXTEND CONCRETE ENCASEMENT 20LF E/S OF THE CROSSING OR HORIZONTAL ENCROACHMENT.

TRAFFIC CONTROL NOTES:

1. SIGNING, STRIPING, MARKING, AND HIGH LEVEL WARNING DEVICES ARE TO BE PLACED AS SHOWN AND/OR AS DIRECTED BY THE COUNTY TRAFFIC ENGINEER OR COUNTY INSPECTOR. THE TRAFFIC CONTROL PLAN IS SUBJECT TO CHANGE BY THE TRAFFIC ENGINEER.
2. ALL SIGNS AND WARNING DEVICES SHALL BE EITHER TYPE 1, BARRICADES OR DRUMS WITH WARNING LIGHTS ON EVERY OTHER DEVICE, AND SHALL CONFORM WITH THE MANUAL ON UNIFORM TRAFFIC CONTROL DEVICES (MUTCD) STANDARDS AND FULTON COUNTY FOR COLOR, SIZE, REFLECTIVITY, HEIGHT, AND PLACEMENT.
3. SPACING OF WARNING DEVICES IN FEET SHALL BE EQUAL TO THE POSTED SPEED OF THE ROAD IN MPH (i.e. 30 feet spacing for 30mph speed limit).
4. STRIPING (WHITE AND YELLOW) AND ARROW MARKING SHALL BE APPLIED USING FULTON COUNTY OR GEORGIA DOT STANDARD THERMOPLASTIC.
5. WHEN NECESSARY, EXISTING STRIPING SHALL BE REMOVED BY GRINDING, UNLESS SPECIFIED BY THE FULTON COUNTY TRAFFIC ENGINEER.
6. ALL SIGNS MUST BE INSTALLED CONCURRENTLY WITH THE PERFORMANCE OF THE STRIPING WORK.
7. CONTACT THE FULTON COUNTY TRAFFIC ENGINEER @ 404-213-6709 ONE WEEK PRIOR TO COMMENCEMENT OF ANY STRIPING WORK.
8. THE CONTRACTOR IS RESPONSIBLE FOR PROVIDING TRAFFIC CONTROL FOR THE DURATION OF THE PROJECT. CONTRACTOR'S PLAN FOR TRAFFIC CONTROL MUST BE APPROVED BY THE COUNTY BEFORE COMMENCEMENT OF ANY CONSTRUCTION.
9. WARNING DEVICES SHALL BE PLACED PRIOR TO COMMENCEMENT OF ANY WORK ON COUNTY ROADS AND SHALL REMAIN IN PLACE UNTIL THE COMPLETION OF SIGNING AND STRIPING WORK.
10. THE CONTRACTOR SHALL IDENTIFY, LOCATE AND PROTECT ALL EXISTING TRAFFIC CONTROL DEVICES INCLUDING, BUT NOT LIMITED TO, SIGNAL POLES, SIGNAL CONTROLLER CABINETS AND LOOPS ALONG THE CONSTRUCTION AREAS. ANY EXISTING SIGNAL EQUIPMENT INCLUDING LOOPS AND CONDUITS DAMAGED DURING CONSTRUCTION SHALL BE REPLACED IN KIND AT NO ADDITIONAL COST TO THE OWNER.

CITY OF ROSWELL CONSTRUCTION NOTES:

1. DRIVEWAYS SHALL BE CONSTRUCTED OF CONCRETE AND SLOPED PER GEORGIA HIGHWAY STANDARD 9031-J. CURB SHALL NOT BE BROKEN FROM GUTTER. CURB AND GUTTER TO BE REMOVED TO EXISTING CONSTRUCTION JOINTS OR NEW JOINTS SAWED.
2. ALL SILT BARRIERS AND CONSTRUCTION ENTRANCE PADS MUST BE PLACED PRIOR TO ANY CLEARING AND/OR GRADING. NO GRADING SHALL BE DONE UNTIL SILT BARRIER INSTALLATION IS COMPLETE.
3. NO ADVERTISING SIGNS, DISPLAYS, OR ANY OTHER STRUCTURES, WHICH ARE DESIGNED, INTENDED, OR USED TO ADVERTISE OR INFORM, ARE PERMITTED INSIDE CITY RIGHTS-OF-WAY.
4. ALL CURBED ISLANDS SHALL BE FILLED TO TOP OF CURB WITH TOPSOIL AND GRASSED.
5. ALL OPEN DRAINAGE SWALES MUST BE GRASSED, AND RIPRAP MUST BE PLACED AS REQUIRED TO CONTROL EROSION. A MINIMUM OF 10 SQUARE YARDS OF 40 LB. STONE SHALL BE PLACED AT ALL HEADWALLS OR FLUMES.
6. NO ADDITIONAL DRAINAGE AREAS SHALL BE DIVERTED ONTO CITY RIGHT-OF-WAY.
7. ALL CORRUGATED METAL STORM DRAINPIPE SHALL BE FULLY BITUMINOUS-COATED GALVANIZED STEEL OR ALUMINIZED TYPE II WITH RE-ROLLED ENDS AND BANDS.
8. THESE CONSTRUCTION DRAWING APPROVALS DO NOT ALLOW ANY WORK ON CITY RIGHT-OF-WAY IN CONNECTION WITH UTILITY LINES (SANITARY SEWER, WATER, POWER, TELEPHONE, GAS, ETC). CITY OF ROSWELL DEPARTMENT OF TRANSPORTATION RIGHT-OF-WAY ENCROACHMENT PERMIT IS REQUIRED FOR ANY WORK PERFORMED WITHIN THE CITY RIGHT-OF-WAY. CONTACT CITY OF ROSWELL DOT (770) 641-3773 FOR ADDITIONAL INFORMATION.
9. THESE CONSTRUCTION DRAWINGS ARE APPROVED WITH THE UNDERSTANDING THAT ALL EASEMENTS AND RIGHT-OF-WAY ARE GRANTED TO THE CITY OF ROSWELL ALONG ALL ROAD FRONTAGES FOR THE PURPOSE OF SLOPING CUTS AND FILLS AS FOLLOWS:
   0' TO 5' - NOT LESS THAN 3 TO 1 SLOPE
   5' OR MORE - NOT LESS THAN 2 TO 1 SLOPE
10. APPLICANT SHALL RE-GRASS TO STATE HIGHWAY DEPARTMENT SPECIFICATIONS ALL CITY RIGHT-OF-WAY AREAS THAT ARE DAMAGED OR DISTURBED DURING WORK AUTHORIZED HEREIN.
11. ALL HANDICAP RAMPS SHALL BE A MINIMUM OF 3.0' IN WIDTH AND AT A MAXIMUM 12:1 SLOPE AND SHALL CONFORM TO STANDARD DETAIL A3 OF THE GEORGIA DEPARTMENT OF TRANSPORTATION STANDARDS CONSTRUCTION DETAILS.
12. ANY NEW SECTION OF ROADWAY TO BE DEDICATED TO THE CITY MUST BE TESTED FOR THICKNESS OF CRUSHER RUN BASE AND ASPHALT; AND THE ASPHALT MUST BE CORED, TO DETERMINE PERCENTAGE OF COMPACTION. CORES SHALL BE TAKEN NO LESS THAN THREE HUNDRED FEET (300') APART AT STAGGERED INTERVALS.
13. THE ISSUANCE OF THESE CONSTRUCTION DRAWINGS DOES NOT ASSURE SEWER AVAILABILITY. SEWER SERVICE IS PROVIDED BY FULTON COUNTY, NOT THE CITY OF ROSWELL.
14. FIVE (5) FOOT WIDE SIDEWALK IS REQUIRED ALONG ALL PUBLIC STREETS, AND IN SOME CASES 10' WIDE, WITH 5 FOOT GRASS STRIP. ALL SIDEWALKS WITHIN THE HISTORIC DISTRICT SHALL BE BRICK.
15. A HORIZONTAL SEPARATION OF AT LEAST 10 FEET MUST BE MAINTAINED BETWEEN THE WATER MAIN AND THE EXISTING OR PROPOSED SEWER. WHEN WATER MAINS CROSS SEWERS, A MINIMUM VERTICAL SEPARATION OF 18 INCHES MUST BE PROVIDED BETWEEN THE TWO (2) PIPES (MEASURED EDGE TO EDGE). AT CROSSINGS, ONE FULL LENGTH OF WATER PIPE MUST BE LOCATED SO THAT BOTH JOINTS ARE AS FAR FROM THE SEWER AS POSSIBLE.
16. ANY PIPE, SOLDER OR FLUX USED IN THE INSTALLATION OR REPAIR OF THE WATER LINES MUST BE LEAD-FREE.
17. FRONT GATES ARE ALLOWED ON DUMPSTER PADS ONLY WITH PRIOR APPROVAL FROM THE PUBLIC WORKS DEPARTMENT.
18. ALL ROAD AND STORM STRUCTURES SHALL CONFORM TO GEORGIA DEPARTMENT OF TRANSPORTATION STANDARD SPECIFICATIONS.
19. CONSTRUCTION WILL BE ALLOWED MON.-SAT. BETWEEN THE HOURS OF 7:00 AM AND 7:00 PM ONLY.
20. SANITARY SEWER AND WATER LINES MUST PASS INSPECTION BEFORE STREETS CAN BE PAVED.
21. BUILDER SHALL BE RESPONSIBLE FOR INSTALLATION OF SIDEWALKS AND THE C.O. WILL NOT BE ISSUED UNTIL SIDEWALK IS INSPECTED AND ACCEPTED.
22. COMPACTION REPORTS SHALL BE FURNISHED TO THE CITY ON ALL UTILITY EXCAVATIONS WITHIN ROADWAY.
23. CONTRACTOR MUST NOTIFY LAND DEVELOPMENT INSPECTOR (770) 641-3780, TWENTY-FOUR (24) HOURS PRIOR TO BEGINNING CONSTRUCTION. IN ADDITION, ALL BACKFLOW DEVICES, VAULTS, BLOCKING AND HYDRO-SEED EQUIPMENT MUST BE INSPECTED BY THE WATER DEPARTMENT (770) 641-3715.
24. ALL GATE VALVES SHALL BE EPOXY COATED WITH RESILIENT-SEATED GATES.
25. ALL EXTERIOR LIGHTING SHALL BE PLACED SO AS TO NOT DIRECTLY ILLUMINATE ADJACENT PROPERTY.
26. THE OWNER/DEVELOPER IS RESPONSIBLE TO COORDINATE WITH THE US ARMY CORPS OF ENGINEERS CONCERNING PERMITS OR REQUIREMENTS WHEN WETLANDS ARE PROPOSED TO BE DISTURBED ON THE PROPERTY. FAILURE TO REQUEST A DETERMINATION OF PERMIT REQUIREMENT BEFORE DISTURBING ANY WETLANDS COULD RESULT IN PENALTIES BEING IMPOSED BY THE CORPS OF ENGINEERS.
27. BURIAL OF CONSTRUCTION MATERIALS IS NOT PERMITTED WITHIN THE CITY OF ROSWELL.
28. BURNING OF DEBRIS OR CONSTRUCTION MATERIALS IS NOT PERMITTED WITHIN THE CITY OF ROSWELL.
29. ALL WATER LINES DEDICATED TO THE CITY OF ROSWELL SHALL BE CLASS 50 DIP.
30. A CITY OF ROSWELL TRENCHING PERMIT IS REQUIRED PRIOR TO ANY TRENCHING ACTIVITY. CONTACT YOUR CITY OF ROSWELL INSPECTOR AT (770) 641-3780 TO OBTAIN A PERMIT.
31. ALL ROAD STRIPING WITHIN THE PUBLIC RIGHT-OF-WAY SHALL BE PRE MARKED AND APPROVED BY THE CITY OF ROSWELL TRANSPORTATION DEPARTMENT, (770) 641-3773, PRIOR TO FINAL STRIPING.
32. AS-BUILT PLANS OF ALL STORMWATER MANAGEMENT FACILITIES SHALL BE PROVIDED TO THE CITY OF ROSWELL PRIOR TO THE ISSUANCE OF ANY CERTIFICATE OF OCCUPANCY. AS-BUILT PLANS SHALL BE CERTIFIED BY A PROFESSIONAL ENGINEER.

TREE PROTECTION NOTES:

1. PROVISIONS FOR TREE PROTECTION ON THE SITE SHALL BE, AS A MINIMUM, IN CONFORMANCE WITH THE REQUIREMENTS OF THE LATEST EDITION OF THE FULTON COUNTY TREE PRESERVATION ORDINANCE AND ADMINISTRATIVE GUIDELINES PERTAINING TO TREE PROTECTION.
2. CONTACT THE DEPARTMENT OF ENVIRONMENT & COMMUNITY DEVELOPMENT AT (404)730-7531 OR 7532TO ARRANGE A PRECONSTRUCTION MEETING WITH THE COUNTY ARBORIST PRIOR TO ANY LAND DISTURBANCE. ALL REQUIRED TREE FENCES MUST BE INSTALLED PRIOR TO THIS MEETING.
3. UNDISTURBED BUFFERS SHALL BE REPLANTED TO BUFFER STANDARDS WHERE SPARSELY VEGETATED OR WHERE DISTURBED AT APPROVED UTILITY CROSSINGS. REPLANTING IS SUBJECT TO COUNTY ARBORIST APPROVAL.
4. NO TREES SHALL BE IMPACTED ON THIS PROJECT.
5. IF THE LANDSCAPE DESIGN OR PLANT MATERIAL ARE CHANGED IN ANY WAY FROM THE FULTON COUNTY PERMITTED PLAN, SUBMIT 2 SETS OF REVISED PLANS TO THE FULTON COUNTY ARBORIST'S OFFICE FOR APPROVAL PRIOR TO ANY LANDSCAPE INSTALLATION.

UTILITIES-NOTE OF CAUTION:

ONLY UTILITY SURFACE FEATURES SHOWN IN THESE PLANS HAVE BEEN FIELD LOCATED. THE LOCATION OF UNDERGROUND UTILITIES SHOWN HEREIN COMES FROM SOURCES WHICH MAY NOT BE RELIABLE AND ALL UNDERGROUND UTILITIES WHICH EXIST WITHIN THE PROJECT AREA MAY NOT HAVE BEEN SHOWN. THE CONTRACTOR SHALL BE RESPONSIBLE FOR LOCATING ALL UNDERGROUND UTILITIES WITHIN THE AREA OF THE PROJECT SITE PRIOR TO CONSTRUCTION ACTIVITIES AND SHALL BE RESPONSIBLE FOR THE COST OF LOSS OF SERVICES AND REPAIRS FOR ANY UTILITY DAMAGE CAUSED DURING CONSTRUCTION. THE CONTRACTOR SHALL REQUEST UTILITY STAKING THROUGH THE UTILITY PROTECTION CENTER AT (770) 623-4332, FAX (770) 623-1847, BEEPER (770) 629-0567, AND MOBILE (404) 375-6206.

GEORGIA REGISTERED No. 022954 PROFESSIONAL ENGINEER MICHAEL C. LEUNG

KHAFRA ENGINEERING CONSULTANTS, INC.
230 PEACHTREE STREET, SUITE 200
ATLANTA, GEORGIA 30303
404-525-2120 FAX 404-522-7941

DSGN	MCLG
DR	ELBN
CHK	MCLG
APVD	MCLG

NO.	DATE	REVISION	BY	APVD

REUSE OF DOCUMENTS
THIS DOCUMENT, AND THE IDEAS AND DESIGNS INCORPORATED HEREIN, AS AN INSTRUMENT OF PROFESSIONAL SERVICE, IS THE PROPERTY OF KHAFRA AND IS NOT TO BE USED, IN WHOLE OR IN PART, FOR ANY OTHER PROJECT WITHOUT THE WRITTEN AUTHORIZATION.

VERIFY SCALES
BAR IS ONE INCH ON ORIGINAL DRAWING
0 1"
IF NOT ONE INCH ON THIS SHEET, ADJUST SCALES ACCORDINGLY.

FULTON COUNTY

BIG CREEK BASIN
TO COBB COUNTY DIVERSION
FORCE MAIN

CIVIL

GENERAL NOTES

SHEET 3 OF 21
DWG NO. C-03
DATE MAY 2007
PROJ NO. 01107-42

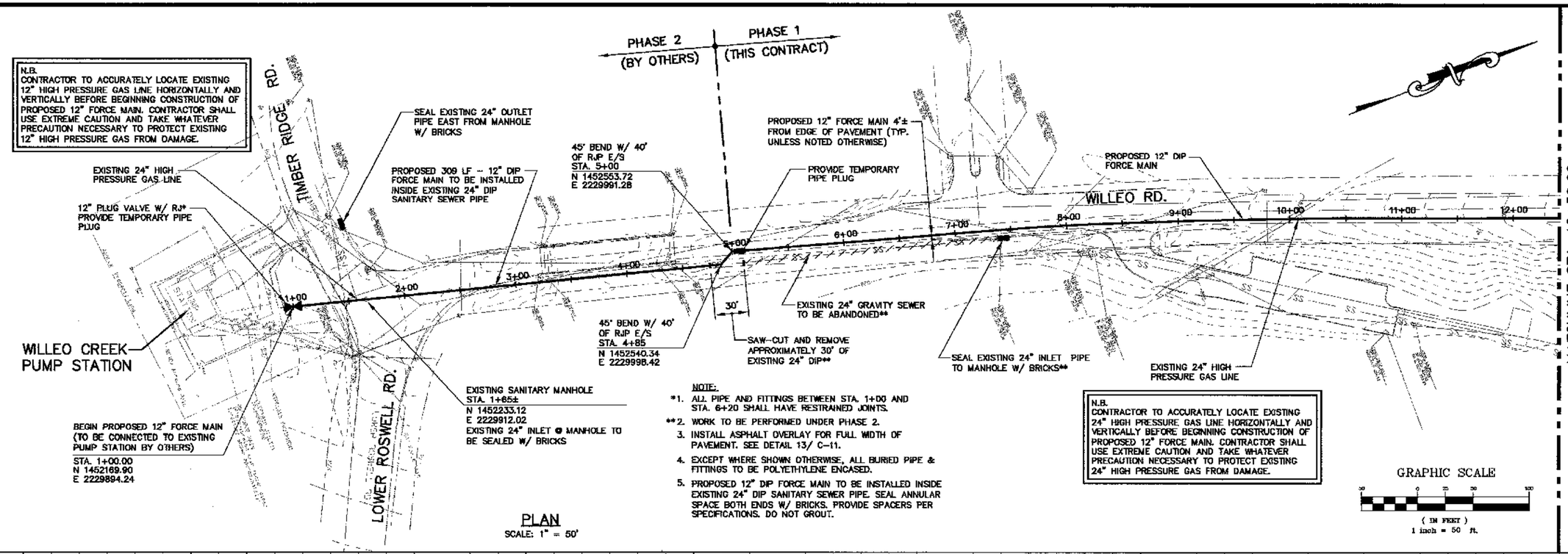

NOTE:

*1. ALL PIPE AND FITTINGS BETWEEN STA. 1+00 AND STA. 6+20 SHALL HAVE RESTRAINED JOINTS.

**2. WORK TO BE PERFORMED UNDER PHASE 2.

3. INSTALL ASPHALT OVERLAY FOR FULL WIDTH OF PAVEMENT. SEE DETAIL 13/ C-11.

4. EXCEPT WHERE SHOWN OTHERWISE, ALL BURIED PIPE & FITTINGS TO BE POLYETHYLENE ENCASED.

5. PROPOSED 12" DIP FORCE MAIN TO BE INSTALLED INSIDE EXISTING 24" DIP SANITARY SEWER PIPE. SEAL ANNULAR SPACE BOTH ENDS W/ BRICKS. PROVIDE SPACERS PER SPECIFICATIONS. DO NOT GROUT.

PLAN

SCALE: 1" = 50'

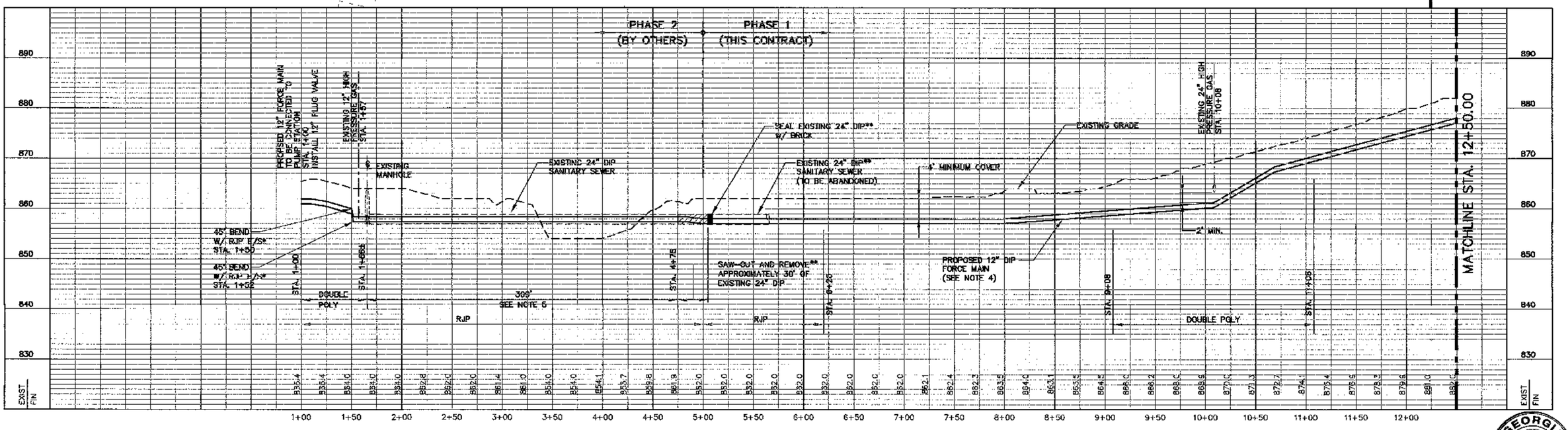

PROFILE

SCALE: 1" = 50' HORZ.
1" = 10' VERT.

GEORGIA REGISTERED PROFESSIONAL ENGINEER No. 022334 MICHAEL C. LEUNG

KHAFRA ENGINEERING CONSULTANTS, INC.
230 PEACHTREE STREET, SUITE 200
ATLANTA, GEORGIA 30303
404-525-2120 FAX 404-522-7941

DSGN	MCLG
DR	ELBN
CHK	MCLG
APVD	MCLG

NO.	DATE	REVISION	BY	APVD

REUSE OF DOCUMENTS
THIS DOCUMENT, AND THE IDEAS AND DESIGNS INCORPORATED HEREIN, AS AN INSTRUMENT OF PROFESSIONAL SERVICE, IS THE PROPERTY OF KHAFRA AND IS NOT TO BE USED, IN WHOLE OR IN PART, FOR ANY OTHER PROJECT WITHOUT THE WRITTEN AUTHORIZATION.

VERIFY SCALES
BAR IS ONE INCH ON ORIGINAL DRAWING
0 1"
IF NOT ONE INCH ON THIS SHEET, ADJUST SCALES ACCORDINGLY.

BIG CREEK BASIN
TO COBB COUNTY DIVERSION
FORCE MAIN

CIVIL
PLAN AND PROFILE
PROPOSED 12" FORCE MAIN
STA. 1+00.00 TO STA. 12+50.00

SHEET	4 OF 21
DWG NO.	C-04
DATE	MAY 2007
PROJ NO.	01107-42

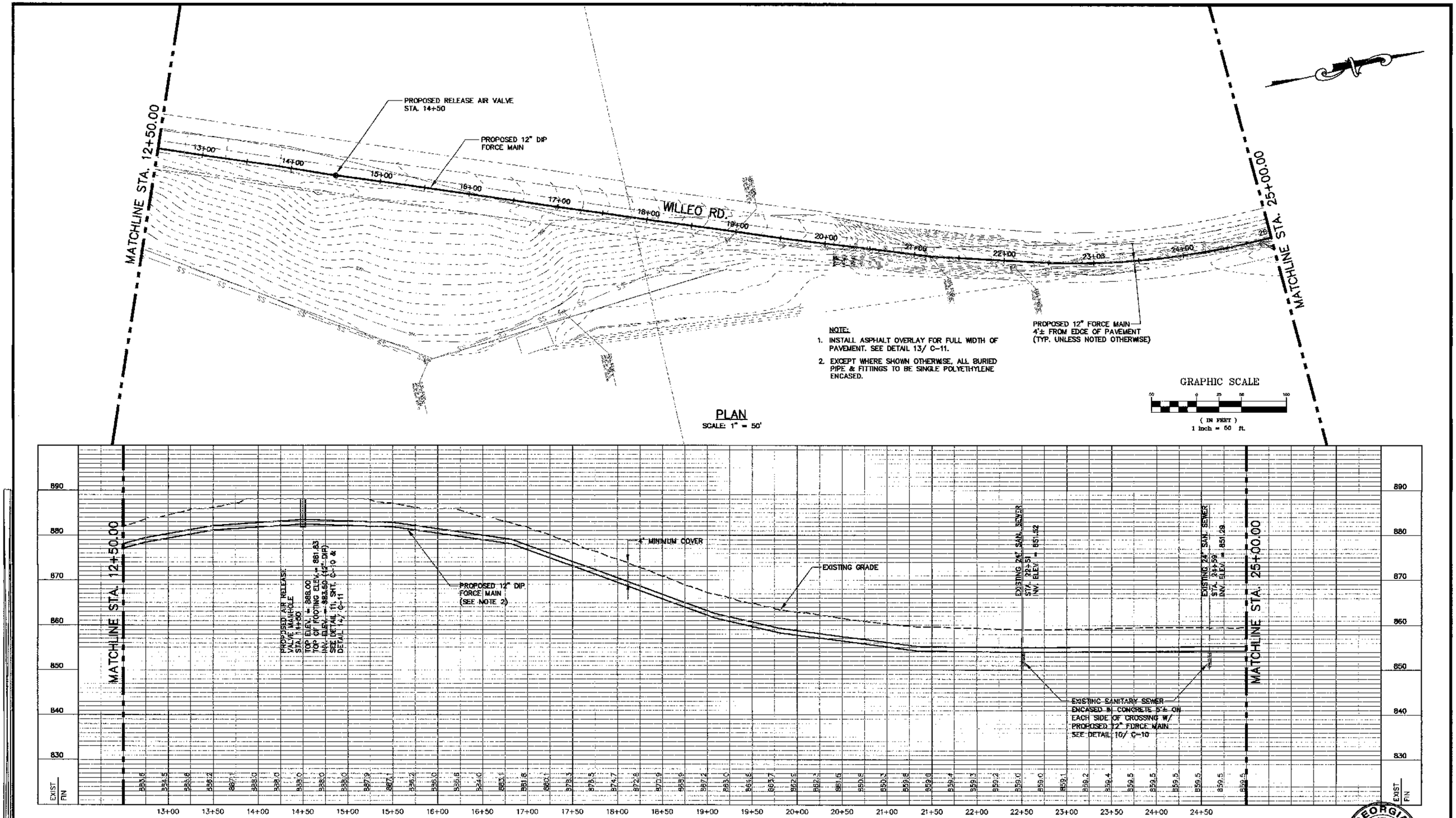

GEORGIA REGISTERED No. 022354 PROFESSIONAL ENGINEER MICHAEL C. LEUNG 5/16/07

KHAFRA ENGINEERING CONSULTANTS, INC.
230 PEACHTREE STREET, SUITE 200
ATLANTA, GEORGIA 30303
404-525-7120 FAX 404-522-7941

DSGN	MCLG
DR	ELBN
CHK	MCLG
APVD	MCLG

NO.	DATE	REVISION	BY	APVD

REUSE OF DOCUMENTS

THIS DOCUMENT, AND THE IDEAS AND DESIGNS INCORPORATED HEREIN, AS AN INSTRUMENT OF PROFESSIONAL SERVICE, IS THE PROPERTY OF KHAFRA AND IS NOT TO BE USED, IN WHOLE OR IN PART, FOR ANY OTHER PROJECT WITHOUT THE WRITTEN AUTHORIZATION.

VERIFY SCALES
BAR IS ONE INCH ON ORIGINAL DRAWING
0 1"
IF NOT ONE INCH ON THIS SHEET, ADJUST SCALES ACCORDINGLY.

BIG CREEK BASIN
TO COBB COUNTY DIVERSION
FORCE MAIN

CIVIL

PLAN AND PROFILE
PROPOSED 12" FORCE MAIN
STA. 12+50.00 TO STA. 25+00.00

SHEET	5 OF 21
DWG NO.	C-05
DATE	MAY 2007
PROJ NO.	01107-42

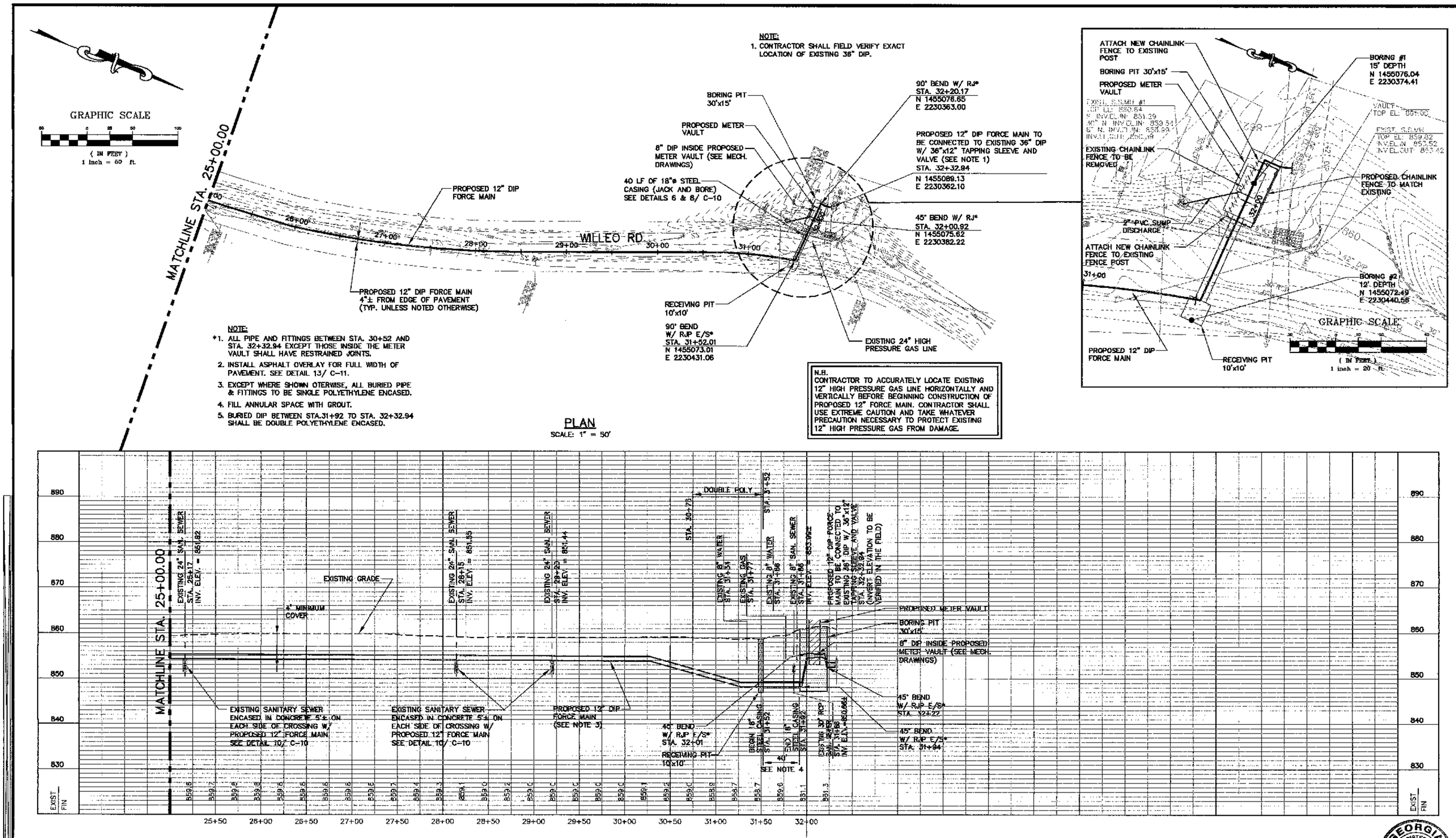

NOTE:
1. CONTRACTOR SHALL FIELD VERIFY EXACT LOCATION OF EXISTING 36" DIP.

NOTE:
*1. ALL PIPE AND FITTINGS BETWEEN STA. 30+52 AND STA. 32+32.94 EXCEPT THOSE INSIDE THE METER VAULT SHALL HAVE RESTRAINED JOINTS.
2. INSTALL ASPHALT OVERLAY FOR FULL WIDTH OF PAVEMENT. SEE DETAIL 13/ C-11.
3. EXCEPT WHERE SHOWN OTERWISE, ALL BURIED PIPE & FITTINGS TO BE SINGLE POLYETHYLENE ENCASED.
4. FILL ANNULAR SPACE WITH GROUT.
5. BURIED DIP BETWEEN STA.31+92 TO STA. 32+32.94 SHALL BE DOUBLE POLYETHYLENE ENCASED.

N.B.
CONTRACTOR TO ACCURATELY LOCATE EXISTING 12" HIGH PRESSURE GAS LINE HORIZONTALLY AND VERTICALLY BEFORE BEGINNING CONSTRUCTION OF PROPOSED 12" FORCE MAIN. CONTRACTOR SHALL USE EXTREME CAUTION AND TAKE WHATEVER PRECAUTION NECESSARY TO PROTECT EXISTING 12" HIGH PRESSURE GAS FROM DAMAGE.

PLAN
SCALE: 1" = 50'

PROFILE
SCALE: 1" = 50' HORZ.
1" = 10' VERT.

GEORGIA REGISTERED No. 022394 PROFESSIONAL ENGINEER MICHAEL C. LEUNG

KHAFRA ENGINEERING CONSULTANTS, INC.
230 PEACHTREE STREET, SUITE 200
ATLANTA, GEORGIA 30303
404-522-2120 FAX 404-522-7941

DSGN	MCLG
DR	ELBN
CHK	MCLG
APVD	MCLG

NO.	DATE	REVISION	BY	APVD

REUSE OF DOCUMENTS
THIS DOCUMENT, AND THE IDEAS AND DESIGNS INCORPORATED HEREIN, AS AN INSTRUMENT OF PROFESSIONAL SERVICE, IS THE PROPERTY OF KHAFRA AND IS NOT TO BE USED, IN WHOLE OR IN PART, FOR ANY OTHER PROJECT WITHOUT THE WRITTEN AUTHORIZATION.

VERIFY SCALES
BAR IS ONE INCH ON ORIGINAL DRAWING
0 1"
IF NOT ONE INCH ON THIS SHEET, ADJUST SCALES ACCORDINGLY.

BIG CREEK BASIN
TO COBB COUNTY DIVERSION
FORCE MAIN

CIVIL
PLAN AND PROFILE
PROPOSED 12" FORCE MAIN
STA. 25+00.00 TO STA. 32+32.94

SHEET 6 OF 21
DWG NO. C-06
DATE MAY 2007
PROJ NO. 01107-42

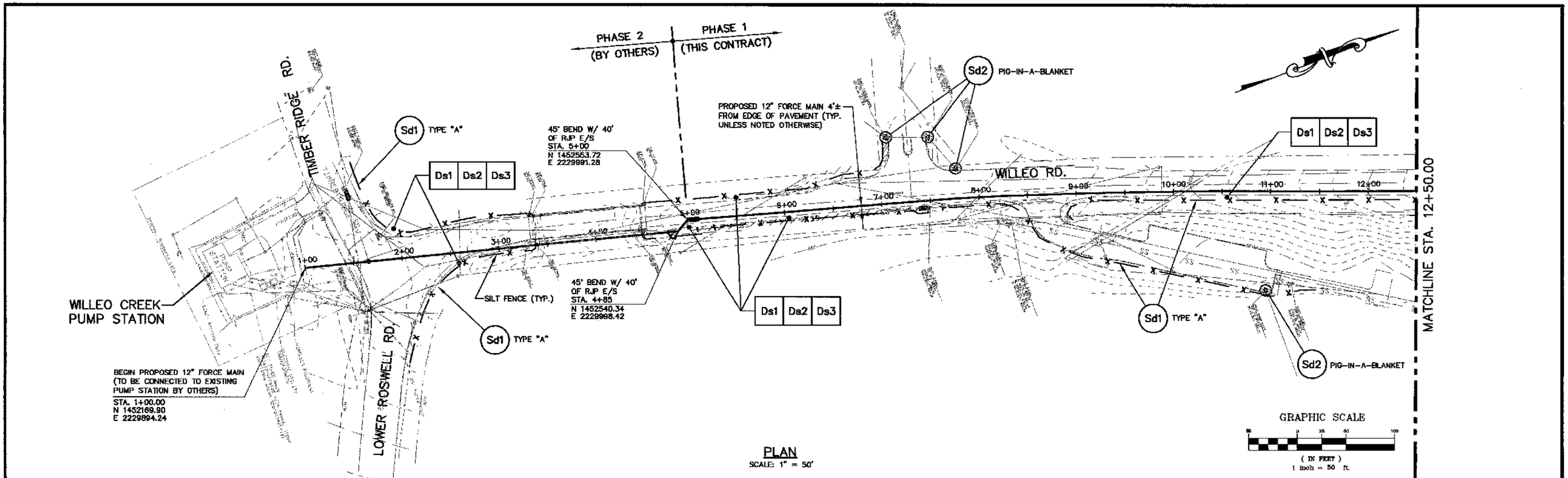

PLAN
SCALE: 1" = 50'

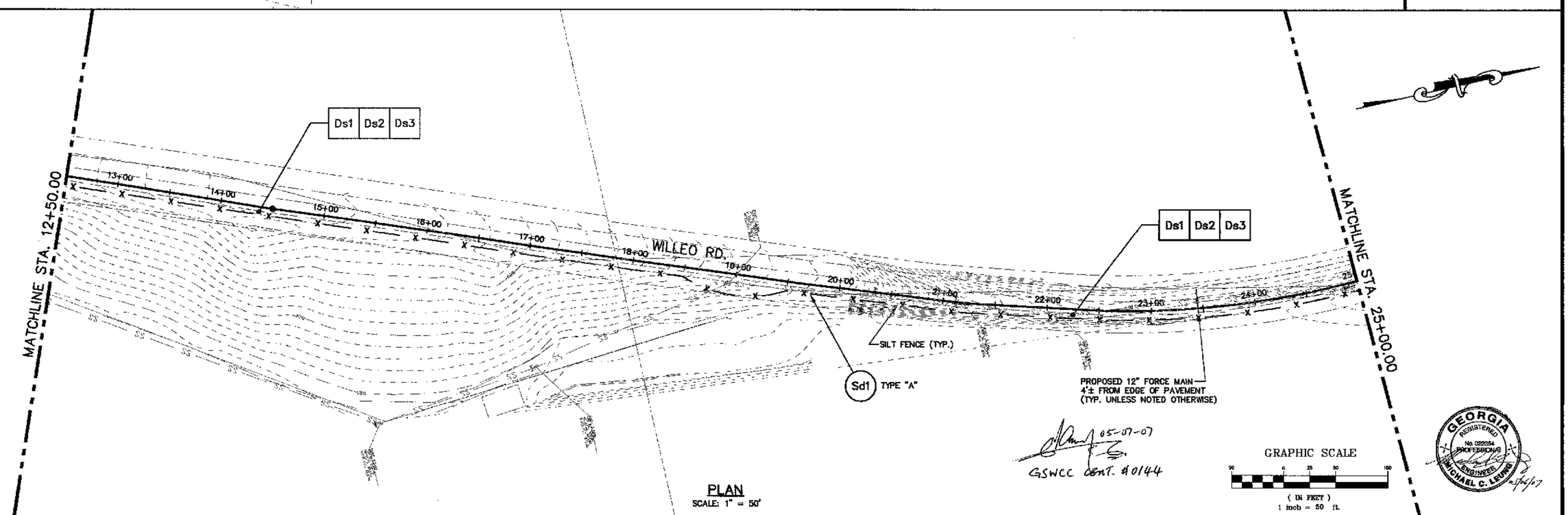

PLAN
SCALE: 1" = 50'

KHAFRA ENGINEERING CONSULTANTS, INC.
230 PEACHTREE STREET, SUITE 260
ATLANTA, GEORGIA 30303
404-525-2120 FAX 404-527-7941

DSGN	MCLG
DR	ELBN
CHK	MCLG
APVD	MCLG

NO.	DATE	REVISION	BY	APVD

REUSE OF DOCUMENTS
THIS DOCUMENT, AND THE IDEAS AND DESIGNS INCORPORATED HEREIN, AS AN INSTRUMENT OF PROFESSIONAL SERVICE, IS THE PROPERTY OF KHAFRA AND IS NOT TO BE USED, IN WHOLE OR IN PART, FOR ANY OTHER PROJECT WITHOUT THE WRITTEN AUTHORIZATION.

VERIFY SCALES
BAR IS ONE INCH ON ORIGINAL DRAWING
0 1"
IF NOT ONE INCH ON THIS SHEET, ADJUST SCALES ACCORDINGLY.

BIG CREEK BASIN
TO COBB COUNTY DIVERSION
FORCE MAIN

CIVIL
EROSION AND SEDIMENT
CONTROL PLAN
STA. 1+00.00 TO STA. 25+00.00

SHEET	7 OF 21
DWG NO.	C-07
DATE	MAY 2007
PROJ NO.	01107-42

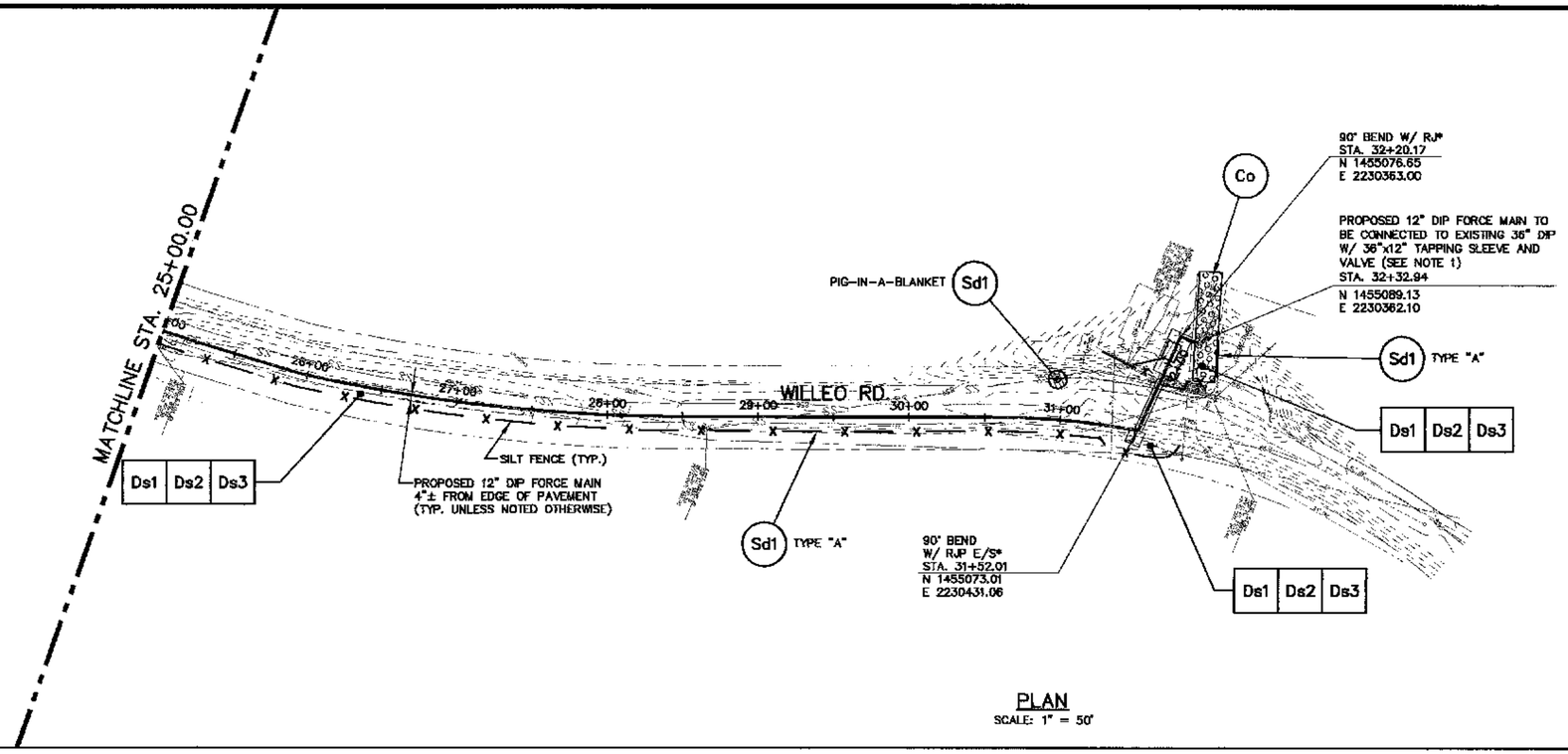

PLAN
SCALE: 1" = 50'

GRAPHIC SCALE
50 0 25 50 100
(IN FEET)
1 inch = 50 ft.

05-07-07
GSWCC Cert # 0144

GEORGIA REGISTERED No. 022354 PROFESSIONAL ENGINEER MICHAEL C. LEUNG

KHAFRA ENGINEERING CONSULTANTS, INC.
230 PEACHTREE STREET, SUITE 200
ATLANTA, GEORGIA 30303
404-525-2120 FAX 404-522-7941

DSGN	MCLG
DR	ELBM
CHK	MCLG
APVD	MCLG

NO.	DATE	REVISION	BY	APVD

REUSE OF DOCUMENTS
THIS DOCUMENT, AND THE IDEAS AND DESIGNS INCORPORATED HEREIN, AS AN INSTRUMENT OF PROFESSIONAL SERVICE, IS THE PROPERTY OF KHAFRA AND IS NOT TO BE USED, IN WHOLE OR IN PART, FOR ANY OTHER PROJECT WITHOUT THE WRITTEN AUTHORIZATION.

VERIFY SCALES
BAR IS ONE INCH ON ORIGINAL DRAWING
0 1"
IF NOT ONE INCH ON THIS SHEET, ADJUST SCALES ACCORDINGLY.

BIG CREEK BASIN
TO COBB COUNTY DIVERSION
FORCE MAIN

CIVIL
EROSION AND SEDIMENT
CONTROL PLAN
STA. 25+00.00 TO STA. 32+32.94

SHEET 8 OF 21
DWG NO. C-08
DATE MAY 2007
PROJ NO. 01107-42

EROSION AND SEDIMENTATION CONTROL NOTES:

1. SILT FENCE MUST MEET THE REQUIREMENTS OF SECTION 171-TEMPORARY SILT FENCE OF THE DEPARTMENT OF TRANSPORTATION, STATE OF GEORGIA, STANDARDS SPECIFICATIONS, CURRENT EDITION.
2. ADDITIONAL EROSION CONTROL MEASURES SHALL BE EMPLOYED WHERE DETERMINED NECESSARY BY ACTUAL SITE CONDITIONS.
3. PROVISIONS TO PREVENT EROSION OF SOIL FROM SITE SHALL BE, AS MINIMUM, IN CONFORMANCE WITH THE REQUIREMENTS OF THE LOCAL EROSION AND SEDIMENTATION ORDINANCE AND THE FULTON COUNTY LAW DEALING WITH EROSION AND SEDIMENTATION.
4. PRIOR TO ANY OTHER CONSTRUCTION, A STABILIZED CONSTRUCTION ENTRANCE SHALL BE CONSTRUCTED AT EACH ENTRY TO OR EXIT FROM THE SITE.
5. THE CONSTRUCTION EXITS SHALL BE MAINTAINED IN A CONDITION WHICH WILL PREVENT TRACKING OR FLOW OF MUD ONTO PUBLIC RIGHT-OF-WAY. THIS MAY REQUIRE PERIODIC TOP DRESSING WITH STONE, AS CONDITION DEMANDS, AND REPAIR AND/OR CLEAN-OUT OF ANY STRUCTURES USED TO TRAP SEDIMENT. ALL MATERIALS SPILLED, DROPPED, WASHED, OR TRACKED FROM VEHICLE ONTO PUBLIC ROADWAY OR INTO STORM DRAIN, MUST BE REMOVED.
6. PRIOR TO COMMENCING LAND DISTURBANCE ACTIVITY, THE LIMITS OF LAND DISTURBANCE SHALL BE CLEARLY AND ACCURATELY DEMARCATED WITH STAKES, RIBBONS, OR OTHER APPROPRIATE MEANS. THE LOCATION AND EXTENT OF ALL AUTHORIZED LAND DISTURBANCE SHALL OCCUR WITHIN THE APPROVED LIMITS INDICATED ON THE APPROVED PLANS.
7. IMMEDIATELY AFTER THE ESTABLISHMENT OF CONSTRUCTION ENTRANCES/EXITS, ALL PERIMETER EROSION CONTROL DEVICES AND STORM WATER MANAGEMENT DEVICES SHALL BE INSTALLED PRIOR TO ANY OTHER CONSTRUCTION.
8. THE CONSTRUCTION OF THE SITE WILL INITIATE WITH THE INSTALLATION OF EROSION CONTROL MEASURES SUFFICIENT TO CONTROL SEDIMENT DEPOSITS AND EROSION. ALL SEDIMENT CONTROL WILL BE MAINTAINED UNTIL ALL UPSTREAM GROUND WITHIN THE CONSTRUCTION AREA HAS BEEN COMPLETELY STABILIZED WITH PERMANENT VEGETATION AND ALL ROADS AND DRIVEWAYS HAVE BEEN PAVED.
9. EROSION CONTROL DEVICES SHALL BE INSTALLED IMMEDIATELY AFTER GROUND DISTURBANCE OCCURS. THE LOCATION OF SOME OF THE EROSION CONTROL DEVICES MAY HAVE TO BE ALTERED FROM THAT SHOWN ON THE APPROVED PLANS IF DRAINAGE PATTERNS DURING CONSTRUCTION ARE DIFFERENT FROM THE FINAL PROPOSED DRAINAGE PATTERNS. IT IS THE CONTRACTOR'S RESPONSIBILITY TO ACCOMPLISH EROSION CONTROL FOR ALL DRAINAGE PATTERNS CREATED AT VARIOUS STAGES DURING CONSTRUCTION. ANY DIFFICULTY IN CONTROLLING EROSION DURING ANY PHASE OF CONSTRUCTION SHALL BE REPORTED TO THE ENGINEER OR COUNTY INSPECTOR IMMEDIATELY.
10. ALL SILT BARRIERS MUST BE PLACED AS ACCESS IS OBTAINED DURING CLEARING. NO GRADING SHALL BE DONE UNTIL SILT BARRIER INSTALLATION IS COMPLETED AND DETENTION FACILITIES IF REQUIRED ARE CONSTRUCTED.
11. CONTRACTOR SHALL MAINTAIN ALL EROSION CONTROL MEASURES UNTIL PERMANENT VEGETATION HAS BEEN ESTABLISHED. CONTRACTOR SHALL CLEAN OUT ALL SEDIMENT PONDS WHEN REQUIRED BY ENGINEER OR COUNTY INSPECTOR. CONTRACTOR SHALL INSPECT EROSION CONTROL MEASURES AT THE END OF EACH WORKING DAY TO ENSURE THEY ARE FUNCTIONING PROPERLY.
12. THE CONTRACTOR SHALL REMOVE ACCUMULATED SILT WHEN THE SILT IS WITHIN 12" OF THE TOP OF THE SILT FENCE UTILIZED FOR EROSION CONTROL.
13. FAILURE TO INSTALL, OPERATE OR MAINTAIN ALL EROSION CONTROL MEASURES WILL RESULT IN ALL CONSTRUCTION BEING STOPPED ON THE JOB SITE UNTIL SUCH MEASURES ARE CORRECTED BACK TO COUNTY STANDARDS.
14. A COPY OF THE APPROVED LAND DISTURBANCE PLAN AND PERMIT SHALL BE PRESENT ON THE SITE AT ALL TIME.
15. ALL DISTURBED AREA MUST BE DRESSED AND GRASSED TO CONTROL EROSION.
16. ALL OPEN SWALES MUST BE GRASSED, AND RIP-RAP MUST BE PLACED AS REQUIRED TO CONTROL EROSION. A MINIMUM OF 4.5 SQUARE YARDS OF 50 POUNDS STONES SHALL BE PLACED AT ALL DOWNSTREAM HEADWALLS IMMEDIATELY UPON INSTALLATION OF PIPES AND DRAINAGE DITCHES.
17. SILT BARRIERS ARE TO BE PLACED AT DOWNSTREAM TOE OF ALL CUT AND FILL SLOPES.
18. ANY DISTURBED AREA LEFT EXPOSED FOR A PERIOD GREATER THAN 14 DAYS SHALL BE STABILIZED WITH TEMPORARY SEEDING.
19. ALL EXISTING DROP INLETS AND CATCH BASINS IN THE CONSTRUCTION AREA SHALL BE FIELD VERIFIED AND PROTECTED FROM SEDIMENT DEPOSITS OR EROSION WITH TYPE Sd2 TEMPORARY SEDIMENT TRAP/CURB INLET PROTECTION.

DUST CONTROL NOTE:

1. LIMIT BLOWING DUST CAUSED BY CONSTRUCTION OPERATIONS BY APPLYING WATER OR EMPLOYING OTHER APPROPRIATE MEANS OR METHODS TO MAINTAIN DUST CONTROL, SUBJECT TO THE APPROVAL OF THE OWNER. AS A MINIMUM, THIS MAY REQUIRE THE USE OF A WATER WAGON TWICE A DAY TO SUPPRESS DUSTY CONDITIONS.

CITY OF ROSWELL EROSION CONTROL NOTES:

1. THE CONSTRUCTION PAD SHALL BE MAINTAINED IN A CONDITION THAT WILL PREVENT TRACKING OR FLOW OF MUD ONTO PUBLIC STREETS.
2. SILT FENCES AND HAY BALE BARRIERS SHALL BE CLEANED OR REPLACED AND MAINTAINED IN FUNCTIONAL CONDITION UNTIL PERMANENT EROSION CONTROL MEASURES ARE ESTABLISHED.
3. SILT FENCE FABRIC SHALL BE COMPRISED OF GA. DEPARTMENT OF TRANSPORTATION QUALIFIED PRODUCTS SECTION 171, TYPE "C", FOR SILT FENCE FABRIC. TYPE "A" SILT FENCE FABRIC AND CONSTRUCTION MAY BE ALLOWED WITH PRIOR WRITTEN APPROVAL FROM THE LAND DEVELOPMENT INSPECTOR.
4. ALL GRASSING SHALL BE IN ACCORDANCE WITH CHAPTER 6, SECTION III, "VEGETATIVE PRACTICES" OF THE MANUAL FOR EROSION AND SEDIMENT CONTROL IN GEORGIA.
5. ALL OTHER WORK SHALL BE PERFORMED IN ACCORDANCE WITH THE SPECIFICATIONS OF THIS SAME MANUAL.
6. THE CONTRACTOR SHALL FURNISH THE CITY OF ROSWELL ENGINEER DIVISION WITH A SCHEDULE OF ANTICIPATED STARTING AND COMPLETION DATES FOR EACH SEQUENCE OF LAND DISTURBING ACTIVITY LISTED IN ITEMS ONE THROUGH FIVE ABOVE.
7. EROSION CONTROL DEVICES WILL BE IN PLACE BEFORE SITE DISTURBANCE AND WILL BE PERIODICALLY INSPECTED AND REPAIRED OR RESTORED AS NEEDED TO FUNCTION PROPERLY UNTIL PERMANENT MEASURES ARE ESTABLISHED AND PROJECT IS COMPLETE, I.E.: CONSTRUCTION EXITS AND SILT FENCES SHALL BE RE-TOPPED OR CLEANED AS SILT REDUCES THEIR EFFECTIVENESS.
8. ANY ADDITIONAL CONSTRUCTION OTHER THAN SHOWN ON THIS PLAN WILL REQUIRE ADDITIONAL EROSION AND SEDIMENT CONTROL MEASURES AND PRIOR APPROVAL FROM THE CITY OF ROSWELL ENGINEERING DIVISION.
9. TEMPORARY VEGETATION AND/OR HEAVY MULCH WILL BE USED TO STABILIZE AREAS. IN NO CASE SHALL A SITE BE LEFT BARE FOR MORE THAN FOURTEEN (14) DAYS.
10. ALL DISTURBED AREAS WILL BE PERMANENTLY LANDSCAPED AND GRASSED AS QUICKLY AS POSSIBLE.
11. ADDITIONAL MEASURES MAY BE REQUIRED TO CONTROL EROSION AS DETERMINED NECESSARY BY CITY INSPECTORS.
12. PERSON RESPONSIBLE FOR EROSION CONTROL MEASURES IS: THOMAS CZECZIL. EMERGENCY #: (770) 410-3421.
13. EROSION CONTROL BLANKETS SHALL BE USED ON ALL SLOPES EXCEEDING 3:1.
14. ALL APPLICATIONS OF HYDROSEED WILL BE FOLLOWED BY ½" TO 1" MULCH.
15. SITES OVER 5 ACRES MUST PREPARE MULTI-STAGE EROSION CONTROL PLAN.
16. NO CLEARING BEYOND THE LIMITS OF DISTURBANCE SHOWN ON THE APPROVED PLANS SHALL BE ALLOWED.
17. NO LAND DISTURBING ACTIVITY WITHIN ANY TREE SAVE AREA SHALL BE ALLOWED.
18. POLYMERS MUST BE USED ON ALL DISTURBED AREAS INCLUDING PROPOSED PARKING LOTS.
19. THE PROPERTY OWNER AND CONTRACTOR ARE EQUALLY RESPONSIBLE FOR ALL EROSION CONTROL ACTIVITIES.
20. NOTICE IS HEREBY GIVEN THAT ALL EROSION AND SEDIMENT DEVICES AND PRACTICES MUST BE INSTALLED AND MAINTAINED AT ALL TIMES. NO FURTHER NOTICE WILL BE GIVEN. ANY SITE UPON WHICH THE LAND DEVELOPMENT INSPECTOR FINDS ANY DEFICIENCY WILL BE SUBJECT TO AN IMMEDIATE ENFORCEMENT ACTION WITHOUT WARNING.
21. EROSION AND SEDIMENT CONTROL DEVICES MUST BE MAINTAINED IN A SATISFACTORY CONDITION 24 HOURS A DAY, 7 DAYS A WEEK.
22. ALL BEST MANAGEMENT PRACTICES SHALL BE JUDGED NOT ON APPEARANCES BUT PERFORMANCES ONLY.
23. IT IS THE RESPONSIBILITY OF THE CONTRACTOR TO OBTAIN QUALIFIED PROFESSIONAL ADVICE WHEN QUESTIONS ARISE CONCERNING DESIGN AND EFFECTIVENESS OF EROSION CONTROL DEVICES, NOT THE CITY OF ROSWELL.
24. EROSION CONTROL DEVICES THAT ARE INSTALLED AS DIRECTED BY THE LAND DEVELOPMENT INSPECTOR BUT NOT SHOWN ON THE APPROVED PLAN AND WHICH ALSO SUBSEQUENTLY FAIL, ARE THE RESPONSIBILITY OF THE CONTRACTOR.
25. ALL TEMPORARY AND PERMANENT SEEDING MUST BE PERFORMED AT THE APPROPRIATE SEASON. ADDITIONAL PLANTINGS WILL BE NECESSARY IF A SUFFICIENT STAND OF GRASS FAILS TO GROW.
26. THE LAND DEVELOPMENT INSPECTOR WILL DETERMINE ADEQUATE COVER OF NEW PLANTINGS.
27. TOPSOIL SHALL BE STOCKPILED AND USED TO DRESS FINAL GRADES.
28. NO DISTURBANCE WILL BE ALLOWED WITHIN FLOOD PLAINS OR WETLANDS.
29. EROSION CONTROL MEASURES WILL BE MAINTAINED AT ALL TIMES. ADDITIONAL EROSION AND SEDIMENT CONTROL MEASURES WILL BE NECESSARY IF DEEMED BY ON-SITE INSPECTION.
30. SILT FENCING MUST BE MIRAFI 100X FABRIC, OR EQUIVALENT SUBSTITUTE. MIRAFI 100X SPECIFICATIONS: MINIMUM WIDTH OF 36", MULLEN BURST STRENGTH OF 200 P.S.I., TRAPEZOID TEAR STRENGTH OF 65 LBS., EQUIVALENT OPENINGS SIZE OF #40 U.S. STANDARD SIEVE AND GRAB STRENGTH OF 120 LBS.
31. SILT FENCES SHALL NOT BE PLACED IN STREAM BUFFER OR FLOOD PLAINS.
32. WHEN SILT FENCES BECOME 1/3 FULL OF SEDIMENT, THE SEDIMENT MUST BE REMOVED.
33. THE CONTRACTOR SHALL FURNISH WEEKLY REPORTS TO THE CITY, WHICH INDICATES THE DATE, PERSON RESPONSIBLE, AND NOTATION OF ALL DEFICIENCIES AND CORRECTIONS MADE TO ALL EROSION AND SEDIMENT CONTROL DEVICES.
34. EROSION CONTROL MEASURES WILL BE MAINTAINED AT ALL TIMES. IF FULL IMPLEMENTATION OF THE APPROVED PLAN DOES NOT PROVIDE FOR EFFECTIVE EROSION CONTROL, ADDITIONAL EROSION AND SEDIMENT CONTROL MEASURES SHALL BE IMPLEMENTED TO CONTROL OR TREAT THE SEDIMENT SOURCE.
35. THE ESCAPE OF SEDIMENT FROM THE SITE SHALL BE PREVENTED BY THE INSTALLATION OF EROSION AND SEDIMENT CONTROL MEASURES AND PRACTICES PRIOR TO, OR CONCURRENT WITH, LAND DISTURBING ACTIVITIES.

GEORGIA REGISTERED PROFESSIONAL ENGINEER No. 023964 MICHAEL C. LEUNG 5/7/07

REPORTING REQUIREMENTS:

REPORTING REQUIREMENTS SHALL COMPLY WITH GAR 100002 SECTION IV.E.1 &2.

RETENTION OF RECORDS SHALL COMPLY WITH GAR 100002 SECTION IV.E.3.

REPORT SUBMITTALS SHALL COMPLY WITH GAR 100002 SECTION IV.F.

NOTICE OF TERMINATION (N.O.T)

A NOTICE OF TERMINATION IS REQUIRED PER GAR 100002 SECTION IV.

POLLUTION CONTROL

ALL ON-SITE FUEL STORAGE DEVICES SHALL BE LOCATED INSIDE A BERMED AREA CAPABLE OF CONTAINING 110% OF THE TANK VOLUME.

FUEL STORAGE ZONES TO BE LOCATED AWAY FROM DRAINAGE & WATERWAYS AS PRACTICALLY POSSIBLE.

ALL SPILLS TO BE REPORTED CONTAINED & COLLECTED/ DISPOSED OF IN ACCORDANCE WITH EPD REGULATIONS.

CERTIFICATION

"I CERTIFY THAT THE PERMITTEE'S EROSION, SEDIMENTATION AND POLLUTION CONTROL PLAN PROVIDES FOR AN APPROPRIATE AND COMPREHENSIVE SYSTEM OF BEST MANAGEMENT PRACTICES REQUIRED BY GEORGIA WATER QUALITY CONTROL ACT AND THE DOCUMENT "MANUAL FOR EROSION AND SEDIMENT CONTROL IN GEORGIA" (MANUAL) PUBLISHED BY THE STATE SOIL AND WATER CONSERVATION COMMISSION AS OF JANUARY 1 OF THE YEAR IN WHICH THE LAND - DISTURBING ACTIVITY WAS PERMITTED PROVIDES FOR THE SAMPLING OF THE RECEIVING WATER(S) OR THE PRACTICES AND SAMPLING METHODS IS EXPECTED TO MEET THE REQUIREMENTS CONTAINED IN THE GENERAL NPDES PERMIT NO. GAR 100002".

05-07-07

SITE VISIT CERTIFICATION

THE DESIGNER HAS VISITED THE SITE PRIOR TO PREPARING THE SITE PLAN IN ACCORDANCE WITH LOCAL AND STATE REQUIREMENTS.

05-07-07

INSPECTION REQUIREMENTS:

INSPECTION REQUIREMENTS SHALL COMPLY WITH GAR 100002 SECTION IV.D.3.

SAMPLING REQUIREMENTS:

SAMPLING REQUIREMENTS SHALL COMPLY WITH GAR 100002 SECTION IV.D.5.

LEVEL II CERTIFICATION NO.

GSWCC 0144	05-07-07
NO.	SIGNATURE

EROSION CONTROL LEGEND

Co	Construction Exit	Co	Ds1	Disturbed Area Stabilization with Mulching Only	Ds1
Sd1	Sediment Barriers (Temporary Silt Fence)	Sd1	Ds2	Disturbed Area Stabilization with Temporary Seeding	Ds2
Sd2	Curb Inlet Protection	Sd2 TYPE "F"	Ds3	Disturbed Area Stabilization with Permanent Vegetation	Ds3

KHAFRA ENGINEERING CONSULTANTS, INC.
250 PEACHTREE STREET, SUITE 200
ATLANTA, GEORGIA 30303
404-525-2120 FAX 404-522-7941

DSGN	MCLG
DR	ELBN
CHK	MCLG
APVD	MCLG

NO.	DATE	REVISION	BY	APVD

REUSE OF DOCUMENTS
THIS DOCUMENT, AND THE IDEAS AND DESIGNS INCORPORATED HEREIN, AS AN INSTRUMENT OF PROFESSIONAL SERVICE, IS THE PROPERTY OF KHAFRA AND IS NOT TO BE USED, IN WHOLE OR IN PART, FOR ANY OTHER PROJECT WITHOUT THE WRITTEN AUTHORIZATION.

VERIFY SCALES
BAR IS ONE INCH ON ORIGINAL DRAWING
0 1"
IF NOT ONE INCH ON THIS SHEET, ADJUST SCALES ACCORDINGLY.

BIG CREEK BASIN
TO COBB COUNTY DIVERSION
FORCE MAIN

CIVIL
EROSION CONTROL NOTES AND LEGEND

SHEET	9 OF 21
DWG NO.	C-08A
DATE	MAY 2007
PROJ NO.	01107-42

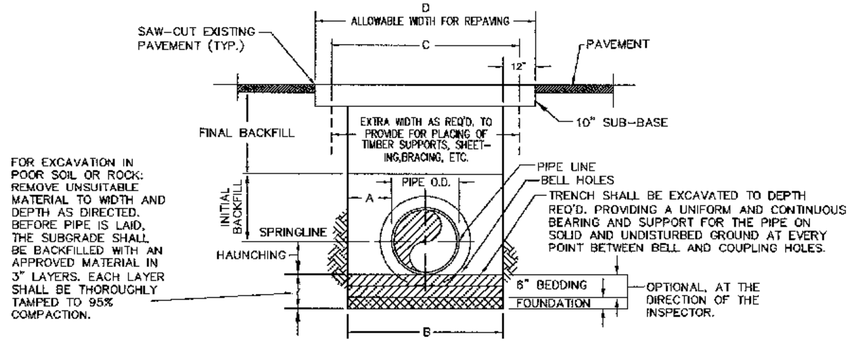

NOTES:

1. COMPACTION: BACKFILLS SHALL BE BUILT-UP IN LAYERS AND EACH LAYER SHALL BE THOROUGHLY COMPACTED BEFORE BEGINNING ANOTHER LAYER. LAYERS SHALL BE NO MORE THAN 6" IN DEPTH. PUDDLING WILL NOT BE PERMITTED, NOR WILL FROZEN OR WET MATERIAL BE PLACED IN TRENCHES.
2. COMPACTION STANDARDS: ALL BACKFILL MATERIALS USED SHALL CONTAIN A SUFFICIENT AMOUNT OF MOISTURE FOR PROPER COMPACTION AND THESE MATERIALS SHALL BE COMPACTED AT NOT LESS THAN 95% OF THEIR OPTIMUM COMPACTION FOR ANY SPECIFIC SOIL CLASSIFICATION AS DETERMINED BY THE MODIFIED PROCTOR TEST ASTM. D698
3. COMPACTION TESTS: COMPACTION TESTS MAY BE REQUIRED IN EXISTING OR PROPOSED STREETS, SIDEWALKS, DRIVEWAYS AND OTHER EXISTING OR PROPOSED PAVED AREAS AT VARYING DEPTHS AND AT INTERVALS AS DETERMINED BY THE ENGINEER WITH A MINIMUM OF ONE TEST PER JOB, AND A MAXIMUM OF ONE REQUIRED TEST FOR EACH 400' OR LESS OF PIPE LINE CONSTRUCTION, UNLESS SOIL CONDITIONS OR CONSTRUCTION PRACTICES, IN THE OPINION OF THE ENGINEER, WARRANT THE NEED FOR ADDITIONAL TESTS.
4. NO BOULDERS OR LOOSE ROCKS PERMITTED IN THE BACKFILL AT THE BOTTOM OF PIPE TRENCH TO 2'-0" ABOVE PIPE.
5. ALL DESIGNS BASED ON FULLY COMPACTED BACKFILL AND UNIFORMLY SUPPORTED PIPE.

ALLOWABLE TRENCH WIDTHS

PIPE SIZE (NOM)	A SIDE CLEARANCE INCH		B TRENCH WIDTH INCH				C SHORING WIDTH (ADDITIONAL-INCH)	D CUT REPAIR WIDTH FEET			
			SOIL		ROCK			SOIL		ROCK	
	SOIL	ROCK	MJ	SJ	MJ	SJ		MJ	SJ	MJ	SJ
3/4"-2"	2	6	NA	8	NA	14	AS APPROVED	NA	3.00	NA	3.17
4"	9	12	25	23	27	23	AS APPROVED	4.08	3.92	4.25	4.08
6"	9	12	28	28	30	30	AS APPROVED	4.33	4.33	4.50	4.50
8"	9	12	32	30	34	32	AS APPROVED	4.67	4.50	4.83	4.67
10"	9	12	34	32	36	34	AS APPROVED	4.83	4.67	5.00	4.83
12"	9	12	36	34	38	36	AS APPROVED	5.00	4.83	5.17	5.00
14"	9	14	39	36	41	38	AS APPROVED	5.23	5.00	5.42	5.17
16"	9	14	42	38	44	40	AS APPROVED	5.50	5.17	5.57	5.33
20"	9	14	45	44	47	46	AS APPROVED	5.75	5.67	5.92	5.83
24"	9	14	50	48	52	50	AS APPROVED	6.17	6.00	6.33	6.17
30"	9	18	58	54	60	56	AS APPROVED	6.83	6.50	7.00	6.67
36"	9	18	64	61	66	63	AS APPROVED	7.33	7.08	7.50	7.25
42"	9	18	72	64	74	66	AS APPROVED	8.00	7.33	8.17	7.50
48"	9	18	78	73	80	76	AS APPROVED	8.50	8.08	9.34	8.25

ALLOWABLE TRENCH WIDTHS (1)

NTS C-09

MAXIMUM PERMISSIBLE DEFLECTIONS

PIPE SIZE (NOMINAL DIAMETER)	PUSH-ON JOINT (18 FT. JOINTS)		MECHANICAL JOINT (18 FT. JOINTS)	
	DEGREE	MAX. OFFSET	DEGREE	MAX. OFFSET
3"	4.0	15"	4.5	17"
4"	4.0	15"	4.5	17"
6"	4.0	15"	4.5	17"
8"	4.0	15"	4.5	17"
10"	4.0	15"	4.5	17"
12"	4.0	15"	4.5	17"
14"	2.5	9.4"	3.0	11"
16"	2.0	7.5"	3.0	11"
20"	2.0	7.5"	2.0	7.5"
24"	2.0	7.5"	2.0	7.5"
30"	1.5	5.5"	2.0	7.5"
36"	1.5	5.5"	2.0	7.5"
42"	1.5	5.5"	1.5	5.5"
48"	1.5	5.5"	1.5	5.5"

NOTE:

1. WHEN A PIPE IS DEFLECTED, THE PIPE SHALL FIRST BE ASSEMBLED IN A STRAIGHT LINE, BOTH HORIZONTALLY AND VERTICALLY BEFORE THE DEFLECTION IS MADE.
2. FOR MECHANICAL JOIN PIPE, THE BOLTS SHALL BE PARTIALLY TIGHTENED BEFORE THE LENGTH OF PIPE IS DEFLECTED. ANY SUPPORTED PIPE, SHALL BE SO SUPPORTED THAT THERE IS ZERO DEFLECTION EXCEPT WHERE EITHER A HORIZONTAL OR VERTICAL CURVE ON A BRIDGE OR OTHER STRUCTURE IS INVOLVED.
3. THRUST RESTRAINTS MAY BE REQUIRED ON THE DEFLECTED JOINTS.

MAXIMUM PERMISSIBLE DEFLECTION (2)

NTS C-09

NOM. PIPE DIA.	BELL DEPTH	BOLTS				JOINT ACCESSORY WEIGHT-Lbs.
		DIAMETER	LENGTH	NUMBER PER JOINT	REC. TORQUE Ft.-Lbs.	
4	2 1/2"	3/4"	3 1/2"	4	75-90	10
6	2 1/2"	3/4"	3 1/2"	6	75-90	16
8	2 1/2"	3/4"	4"	6	75-90	25
10	2 1/2"	3/4"	4"	8	75-90	30
12	2 1/2"	3/4"	4"	8	75-90	40
14	3 1/2"	3/4"	4 1/2"	10	75-90	45
16	3 1/2"	3/4"	4 1/2"	12	75-90	55
18	3 1/2"	3/4"	4 1/2"	12	75-90	65
20	3 1/2"	3/4"	4 1/2"	14	75-90	85
24	3 1/2"	3/4"	5"	16	75-90	105
30	4"	1"	6"	20	100-120	220
36	4"	1"	6"	24	100-120	285
42	4"	1 1/4"	6"	28	120-150	400
48	4"	1 1/4"	6"	32	120-150	475

MECHANICAL JOINT BOLT USAGE CHART (3)

NTS C-09

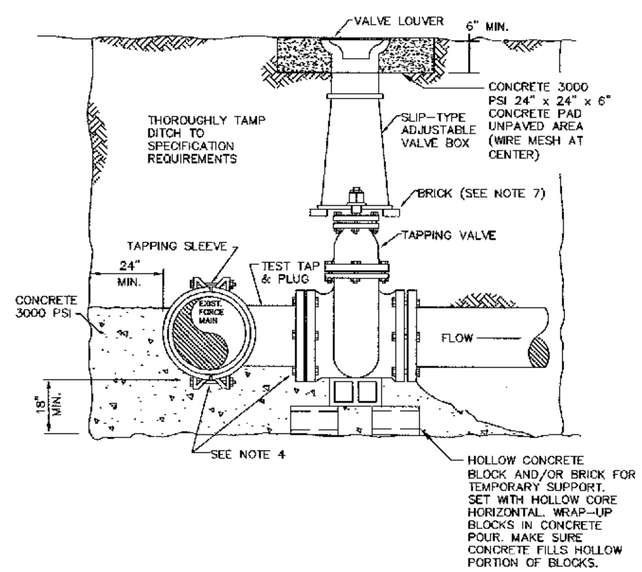

NOTE:

1. TEMPORARILY SUPPORT TAPPING SADDLE AND VALVE AND APPLY STANDARD HYDROSTATIC TEST.
2. IF NO LEAKS, POUR INDICATED PERMENANT CONCRETE BLOCK AND SUPPORT PAD.
3. MAKE TAP, LINE EXTENSION AND BACKFILL.
4. COVER GLANDS AND BOLTS WITH HEAVY POLYETHELENE SHEETING TO KEEP CONCRETE FROM BONDING. TYPICAL WHENEVER BOLTS OR GLANDS MAY BE "WRAPPED-UP" IN CONCRETE.
5. COAT TAPPING SLEEVE AND BOLTS WITH APPROVED BITUMASTIC COATING BEFORE POURING CONCRETE. TYPICAL FOR ALL STEEL INCLUDING RODS, COUPLINGS, STRAPS, AND OTHER BURIED STEEL.
6. INSTALLATION, TIE RODS AND CLAMP ASSEMBLY SHALL BE CLEANED THOROUGHLY, COVERED WITH ROYSTON LABORATORIES, INC. ROSKOTE MASTIC NO A393, OR KOPPERS CO. INC. BITUMASTIC SUPERSERVICE BLACK OR APPROVED EQUIVALENT.
7. VALVE BOX SHALL REST ON BRICK. THERE SHALL BE NO CONTACT WITH VALVE BONNET.
8. PROVIDE VALVE BOX COVER MARKED "SEWER".
9. PROVIDE VALVE MARKER.

TAPING SLEEVE AND VALVE INSTALLATION DETAIL (4)

NTS C-09

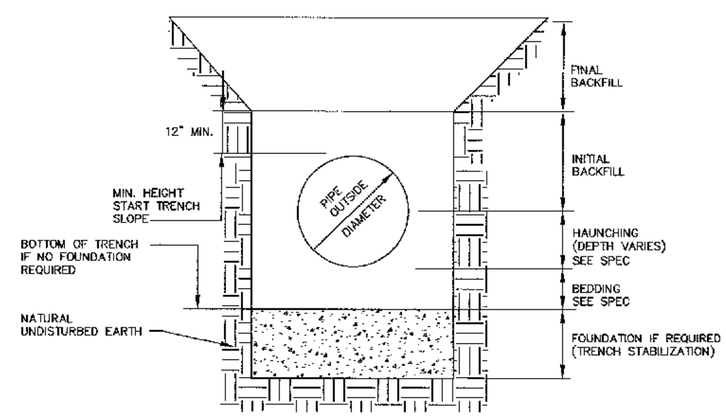

TRENCH TERMINOLOGY (5)

NTS C-09

GEORGIA REGISTERED PROFESSIONAL ENGINEER No. 022234 MICHAEL C. LEUNG

KHAFRA ENGINEERING CONSULTANTS, INC.
230 PEACHTREE STREET, SUITE 200
ATLANTA, GEORGIA 30303
404-525-2120 FAX 404-522-7941

DSGN	MCLG
DR	ELBN
CHK	MCLG
APVD	MCLG

NO.	DATE	REVISION	BY	APVD

REUSE OF DOCUMENTS
THIS DOCUMENT, AND THE IDEAS AND DESIGNS INCORPORATED HEREIN, AS AN INSTRUMENT OF PROFESSIONAL SERVICE, IS THE PROPERTY OF KHAFRA AND IS NOT TO BE USED, IN WHOLE OR IN PART, FOR ANY OTHER PROJECT WITHOUT THE WRITTEN AUTHORIZATION.

VERIFY SCALES
BAR IS ONE INCH ON ORIGINAL DRAWING
0 1"
IF NOT ONE INCH ON THIS SHEET, ADJUST SCALES ACCORDINGLY.

FULTON COUNTY

BIG CREEK BASIN
TO COBB COUNTY DIVERSION
FORCE MAIN

CIVIL

STANDARD DETAILS

SHEET	10 OF 21
DWG NO.	C-09
DATE	MAY 2007
PROJ NO.	01107-42

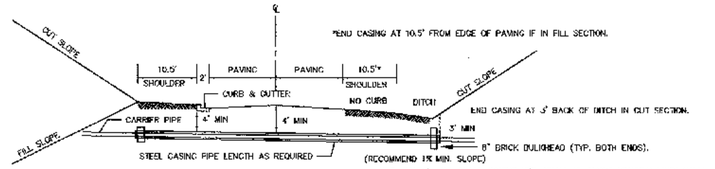

BORING NOTES:

CASING TO BE STEEL PIPE (ROUND) WITH 45' BEVELED EDGES.
ALL CUTS TO BE SQUARED TO END.
JOIN ALL PIPE WITH DOUBLE BEAD BUTT WELDS.
AUGER HEAD DIAMETER CANNOT EXCEED DIAMETER OF CASING BY MORE THAN 2".
BORING AND CASING SHALL BE INSTALLED SIMULTANEOUSLY.
ANYTHING 6" OR LARGER REQUIRES BORE AND CASE.
CASING PIPE SHALL HAVE A PROTECTIVE COATING CONSISTING OF A COAL-TAR PRIMER COAT AND AN APPLICATION OF HOT COAL-TAR ENAMEL $\frac{1}{8}$" ($\frac{1}{4}$-$\frac{1}{2}$") THICK PLUS A BONDED 15 LB. ASBESTOS WRAP.
PIT TO BE NO CLOSER THAN 4' BEHIND CURB OR EDGE OF PAVEMENT.
TYPICAL PIT IS 32' LONG BY 10' WIDE.
CASING SHALL BE MANUFACTURED FROM STEEL CONFORMING TO ASTM A 139, GRADE B.
ALL BORING MUST BE APPROVED AND A PERMIT OBTAINED FROM PUBLIC WORKS (404) 730-7430.

SECTION
N.T.S.

PIPE CASING. THE STEEL CASING PIPE SHALL BE MANUFACTURED FROM STEEL CONFORMING TO ASTM A 139, GRADE B. SIZE AND THICKNESS SHALL BE AS FOLLOWS:

UNDER RAILROADS

PIPE DIAMETER INCHES (I.D)	CASING DIAMETER INCHES (I.D.) MIN.	WALL THICKNESS INCHES
6	14	0.250
8	18	0.250
10	20	0.281
12	22	0.312
14	24	0.344
16	30	0.406
18	30	0.406
20	32	0.469
24	36	0.469
30	42	0.500

UNDER HIGHWAYS

PIPE DIAMETER INCHES (I.D)	CASING DIAMETER INCHES (I.D.) MIN.	WALL THICKNESS INCHES
5	12	0.250
8	12	0.250
10	15	0.250
12	18	0.250
16	24	0.250
18	30	0.312
20	30	0.312
24	36	0.375
30	42	0.375

FULTON COUNTY STANDARD 653 ROADWAY CROSSING BORE AND CASE DETAIL	BY / REVISION / DATE	SCALE N.T.S.	DSG/DRN/CHKD: CJP; APPROVED: SLS; DATE: 1-19-03	FULTON COUNTY PUBLIC WORKS 141 PRYOR ST. ATLANTA, GA. 30303 404-730-7400 FAX:730-6325	DWG. NO. 653	SHEET: OF:

ROADWAY CROSSING BORE AND CASE DETAIL (6)
NTS C-10

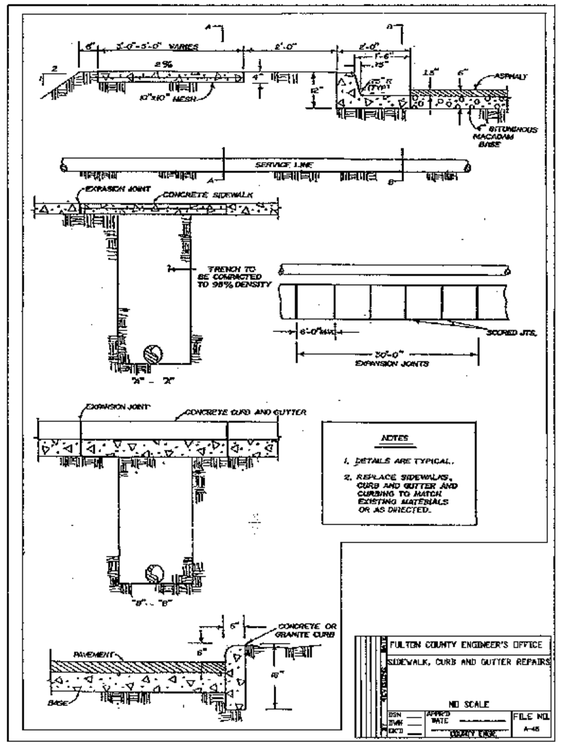

SIDEWALK, CURB AND GUTTER REPAIRS (9)
NTS C-10

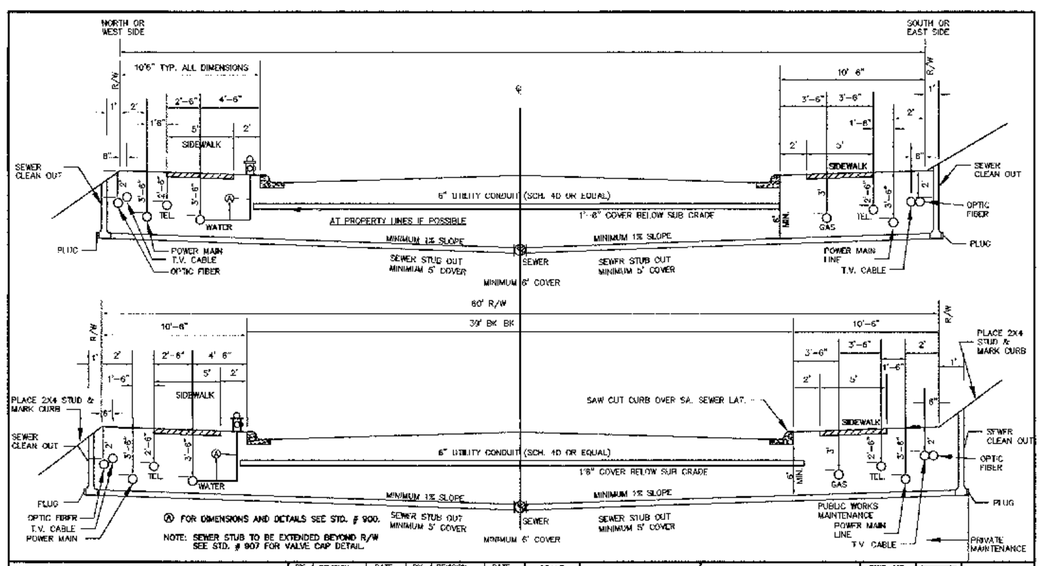

FULTON COUNTY STTANDARD 903 UNDERGROUND UTILITY TYPICAL CROSS SECTIONS	BY / REVISION / DATE	SCALE N.T.S.	DSG/DRN/CHKD: CJP; APPROVED: SLS; DATE: 1-19-03	FULTON COUNTY PUBLIC WORKS 141 PRYOR ST. ATLANTA, GA. 30303 404-730-7400 FAX:730-6325	DWG. NO. 903	SHEET: OF:

UNDERGROUND UTILITIES TYP. CROSS SECTION (7)
NTS C-10

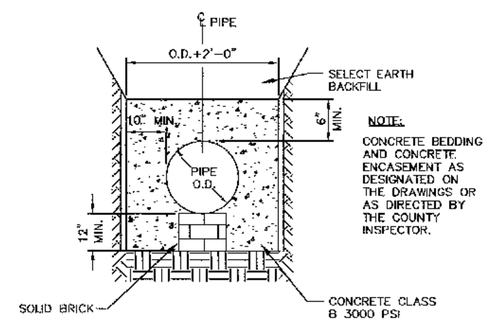

NOTE:
CONCRETE BEDDING AND CONCRETE ENCASEMENT AS DESIGNATED ON THE DRAWINGS OR AS DIRECTED BY THE COUNTY INSPECTOR.

CONCRETE ENCASEMENT (10)
NTS C-10

GEORGIA REGISTERED PROFESSIONAL ENGINEER No. 022264 MICHAEL C. LEUNG Exp 6/30/07

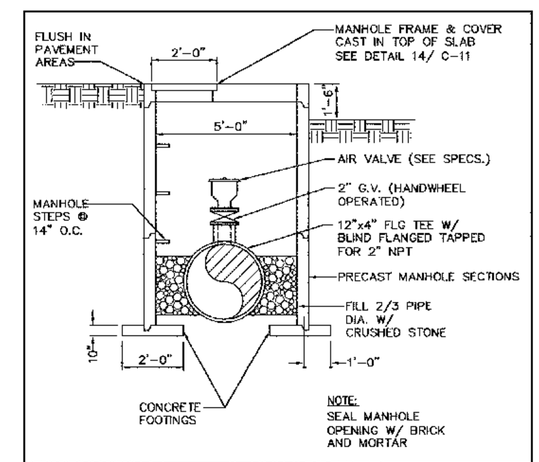

STANDARD DETAILS	DATE: JULY 2000
AIR VALVE AUTOMATIC	SCALE: NONE
	DETAIL NO. W-9

AIR VALVE AUTOMATIC (11)
NTS C-10

KHAFRA ENGINEERING CONSULTANTS, INC.
230 PEACHTREE STREET, SUITE 2000
ATLANTA, GEORGIA 30303
404-525-2120 FAX 404-522-7941

DSGN	MCLG				
DR	ELBN				
CHK	MCLG				
APVD	MCLG	NO.	DATE	REVISION	BY / APVD

REUSE OF DOCUMENTS
THIS DOCUMENT, AND THE IDEAS AND DESIGNS INCORPORATED HEREIN, AS AN INSTRUMENT OF PROFESSIONAL SERVICE, IS THE PROPERTY OF KHAFRA AND IS NOT TO BE USED, IN WHOLE OR IN PART, FOR ANY OTHER PROJECT WITHOUT THE WRITTEN AUTHORIZATION.

VERIFY SCALES
BAR IS ONE INCH ON ORIGINAL DRAWING
0 1"
IF NOT ONE INCH ON THIS SHEET, ADJUST SCALES ACCORDINGLY.

BIG CREEK BASIN
TO COBB COUNTY DIVERSION FORCE MAIN

CIVIL
STANDARD DETAILS

SHEET	11 OF 21
DWG NO.	C-10
DATE	MAY 2007
PROJ NO.	01107-42

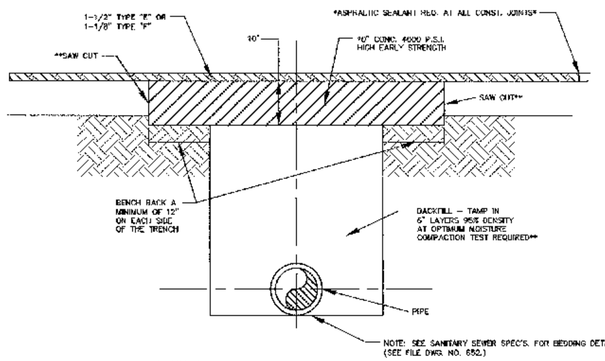

NOTE:
1. ALL LATERAL STREET CUTS MUST BE COVERED WITH STEEL PLATES OF SUFFICIENT THICKNESS TO SPAN THE CUT WITHOUT NOTICEABLE DEFLECTION. PLATES WILL REMAIN IN PLACE UNTIL THE CONCRETE BASE HAS GAINED SUFFICIENT STRENGTH TO WITHSTAND TRAFFIC LOADS (24 HR. MINIMUM).
2. WHEN AN OPEN CUT IS PERFORMED ON A PUBLIC RIGHT OF WAY, A 10-INCH THICK CONCRETE (4000 PSI HIGH EARLY STRENGTH) SUB-BASE MUST BE PROVIDED IN THE PATCH AREA.
3. THE ROADWAY SHALL BE RESURFACED WITH A MINIMUM OF 1 1/8 INCH TYPE "F" ASPHALT TOPPING OR 1 1/2 INCH OF TYPE "B" ASPHALT TOPPING OR SURFACE COURSE. THE WIDTH OF THE ROAD TO RECEIVE RESURFACING SHALL BE AS INDICATED ON THE PLANS AND SHALL EXTEND 50 FEET IN EITHER DIRECTION FROM THE LIMITS OF THE OPEN CUT.

FULTON COUNTY STANDARD 905 BACKFILLING UTILITY CUTS & REPLACING PAVEMENT	BY	REVISION	DATE	BY	REVISION	DATE	SCALE	DSG/DRN/CHKD: CJP	FULTON COUNTY PUBLIC WORKS	DWG. NO.	SHEET:
							N.T.S.	APPROVED: SLS	141 PRYOR ST. ATLANTA, GA. 30303	905	OF:
								DATE: 1-18-03	404-730-7400 FAX:730-6325		

BACKFILLING UTILITY CUTS AND REPLACING PAVEMENT (12)
NTS C-11

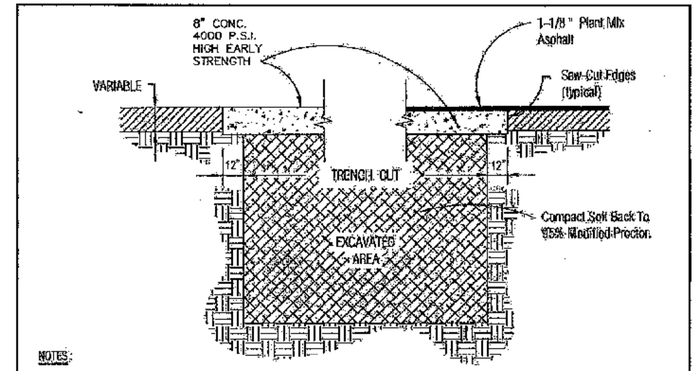

NOTES:
1. WHERE CUT IS MADE IN CONCRETE PAVEMENT, SURFACE IS TO BE FINISHED FLUSH WITH EXISTING PAVEMENT, IN CONCRETE.
2. WHERE CUT IS MADE IN ASPHALT PAVEMENT, CONCRETE IS TO BE LEFT BELOW EXISTING PAVEMENT, WITH 1-1/8" BF PLANT MIX TOPPING (TYPE "F") PLACED OVER CONCRETE. NO EARLIER THAN THREE (3) DAYS AFTER POURING CONCRETE.
3. PER LONGITUDINAL STREET CUTS IN EXCESS OF 150', THE CONCRETE SHALL BE FLUSH WITH EXISTING PAVING AND THE ENTIRE STREET WIDTH SHALL BE OVERLAID WITH A MINIMUM 1-1/8" TYPE F ASPHALT TOPPING.

CROSS - SECTION VIEW

City of Roswell
ENGINEERING DIVISION
38 Hill St., Ste B-100 Roswell, Ga. 30075 (770) 594-6150

STREET - CUT REPAVING DETAIL

SCALE: NO SCALE	AutoCAD 2000.dwg
DATE: 05-31-07	REVISION: 11-13-08
DRAWN: S. HANBY	DWG. #: 100-012.

STREET-CUT REPAVING DETAIL (13)
NTS C-11

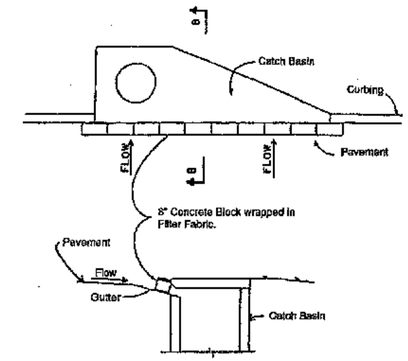

SECTION B-B

NOTE:
Install filter after any asphalt pavement installation.

CURB INLET FILTER
"PIGS IN BLANKET"

EROSION CONTROL/INLET PROTECTION (SD2)
NTS C-11

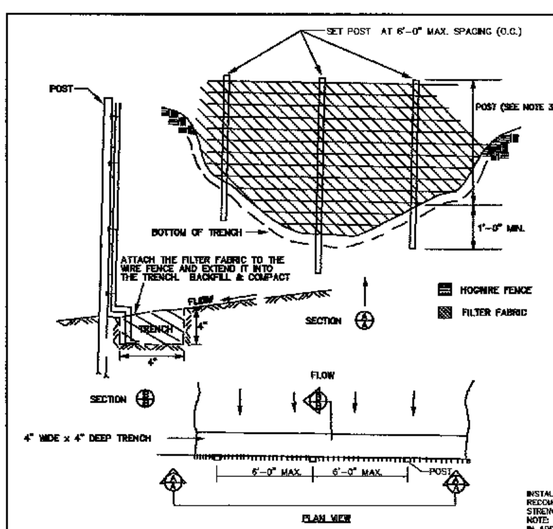

1. TYPE A. DESCRIPTION: WATER PERMEABLE FILTER FENCE MATERIAL COMPOSED OF STRONG ROT PROOF SYNTHETIC FIBERS FORMED INTO A MATRIX OF WOVEN OR NONWOVEN FABRIC. EITHER TYPE OF FABRIC SHALL BE FREE OF ANY TREATMENT OR COATING WHICH MIGHT SIGNIFICANTLY ALTER IT'S PHYSICAL PROPERTIES AFTER INSTALLATION. THE FABRIC SHALL CONTAIN STABILIZER AND/OR INHIBITORS TO MAKE THE FILAMENTS RESISTANT TO DETERIORATION RESULTING FROM EXPOSURE TO SUNLIGHT OR HEAT. THE FABRIC SHALL BE A PERVIOUS SHEET OF SYNTHETIC FIBERS ORIENTED INTO A NETWORK SO THAT FIBERS RETAIN THEIR RELATIVE POSITION WITH RESPECT TO EACH OTHER.
EDGES OF THE FABRIC SHALL BE FINISHED TO PREVENT THE OUTER YARN FROM PULLING AWAY FROM THE MATERIAL. THE FABRIC SHALL BE FREE OF DEFECTS OR FLAWS WHICH SIGNIFICANTLY AFFECT THE PHYSICAL AND/OR FILTERING PROPERTIES. THE FABRIC SHALL HAVE A MINIMUM WIDTH OF THIRTY SIX (36) INCHES. SHEETS OF FABRIC MAY BE SEWN OR BONDED TOGETHER. NO DEVIATION FROM ANY PHYSICAL STANDARD WILL BE PERMITTED DUE TO THE PRESENCE OF THE SEAM.
THE FABRIC MAY BE MANUFACTURED WITH POCKETS FOR POSTS, HEMS WITH CORD OR WITH POSTS PREATTACHED USING STAPLES OR BUTTON HEAD NAILS.

2. TYPE B. DESCRIPTION: TYPE B FILTER FABRIC SHALL MEET THE SAME STANDARDS AS TYPE A. FILTER FABRIC SHALL BE A MINIMUM OF 22" WIDE.

3. MATERIALS
A. POSTS
1. HARDWOOD: 1.5"x1.5"x48" MINIMUM FOR TYPE A FABRIC. FOR TYPE B FABRIC, 1"x1"x36" MINIMUM.
2. SOFTWOOD: 3" DIAMETER MINIMUM OR NOM. 2"x4" AND STRAIGHT ENOUGH TO PROVIDE A FENCE WITHOUT NOTICEABLE MISALIGNMENT FOR TYPE A FABRIC. FOR TYPE B FABRIC, AT LEAST 2" IN DIAMETER OR NOM. 2"x2".
3. STEEL: POSTS SHALL BE ROUND, U.T. OR C SHAPED WITH A MINIMUM WEIGHT OF 1.3 POUNDS PER FOOT AND HAVE PROJECTIONS FOR FASTENING THE WIRE TO THE FENCE FOR TYPE A FABRIC. FOR TYPE B FABRIC, POSTS SHALL HAVE A MINIMUM WEIGHT OF 0.75 POUNDS PER FOOT AND ROUND POSTS SHALL BE A MINIMUM OF 1" IN DIAMETER.

B. SPACING: SIX (6) FOOT CENTERS MAXIMUM.
C. FABRIC: GEORGIA DOT QUALIFIED PRODUCTS LIST #36 ONLY.
D. FASTENERS: WIRE STAPLES WILL BE A NO. 17 GAGE MINIMUM AND SHALL HAVE A CROWN AT LEAST 3/4 INCH WIDE AND LEGS AT LEAST 1/2 INCH LONG. STAPLES SHALL BE EVENLY SPACED WITH AT LEAST 5 PER POST. NAILS SHALL BE 14 GAGE MINIMUM ONE INCH LONG WITH 3/4 INCH BUTTON HEADS. NAILS SHALL BE EVENLY SPACED WITH AT LEAST 4 PER POST.
4. INSTALLATION: TEMPORARY SILT FENCE INSTALLATION SHALL CONFORM TO THE STANDARDS SET FORTH IN THE MANUAL FOR EROSION AND SEDIMENT CONTROL IN GEORGIA.

5. MAINTENANCE: THE DEVELOPER/CONTRACTOR SHALL MAINTAIN THE SILT FENCE UNTIL THE LDA IS COMPLETE AND FINAL STABILIZATION IS ACHIVED. FILTER FABRIC SHALL BE REMOVED AND REPLACED WHENEVER IT HAS DETERIORATED OR BEEN OTHERWISE DAMAGED TO SUCH EXTENT THAT IT REDUCES THE EFFECTIVENESS OF THE SILT FENCE.

INSTALLATION OF FABRIC FENCE MATERIAL IN AREAS OF CONCENTRATED FLOW IS NOT RECOMMENDED UNLESS PROPER PROVISIONS ARE MADE TO SUPPLEMENT OR OTHERWISE STRENGHTHEN THE FENCE TO WITHSTAND INCREASED DRAINAGE WATER VELOCITIES.
NOTE: VENDOR MUST SUPPLY LETTER OF WARRANTY FOR AFOREMENTIONED SPECIFICATIONS. IN ADDITION, THIS LETTER SHOULD STATE THAT THE FABRIC IS ON THE GEORGIA DPL #36.

LEGEND	BY	REVISION	DATE	BY	REVISION	DATE	SCALE	DSG/DRN/CHKD:	FULTON COUNTY PUBLIC WORKS	DWG. NO.	SHEET:
TEMPORARY SILT FENCE							1"=	APPROVED: H.A. FRANDSEN	141 PRYOR ST. ATLANTA, GA. 30303	778	OF:
								DATE:	404-730-7400 FAX: 730-6325		
					AGND	6/8/93					

TEMPORARY SILT FENCE (SD1)
NTS C-11

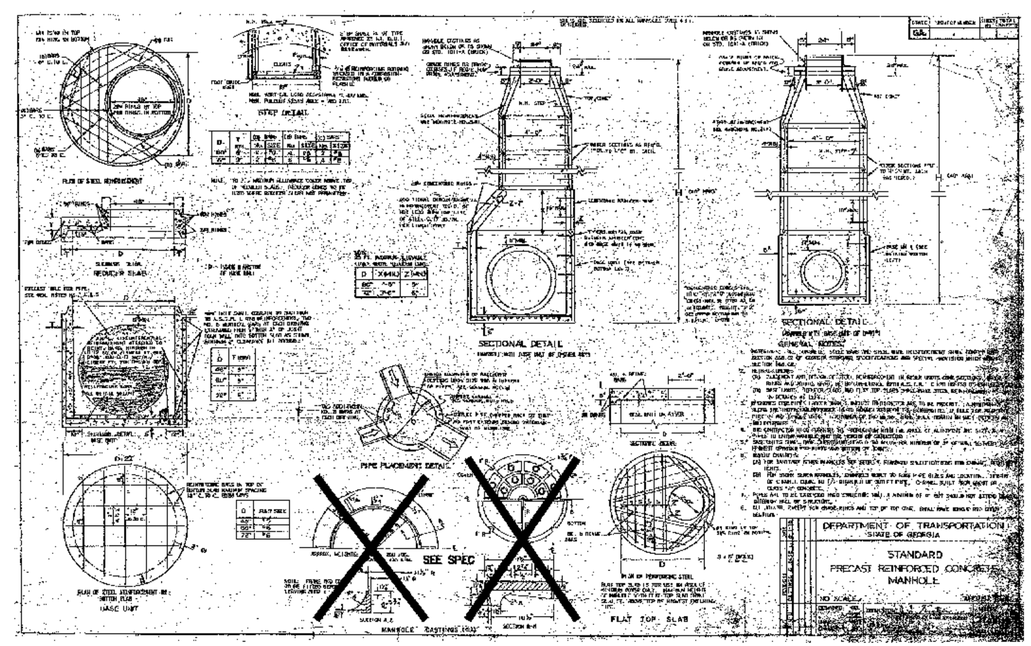

PRECAST REINFORCED CONCRETE MANHOLE (14)
NTS C-11

GEORGIA REGISTERED No. 022354 PROFESSIONAL ENGINEER MICHAEL C. LEUNG

KHAFRA ENGINEERING CONSULTANTS, INC.
230 PEACHTREE STREET, SUITE 200
ATLANTA, GEORGIA 30303
404-525-2120 FAX 404-522-7941

DSGN	MCLG
DR	ELBN
CHK	MCLG
APVD	MCLG

NO.	DATE	REVISION	BY	APVD

REUSE OF DOCUMENTS
THIS DOCUMENT, AND THE IDEAS AND DESIGNS INCORPORATED HEREIN, AS AN INSTRUMENT OF PROFESSIONAL SERVICE, IS THE PROPERTY OF KHAFRA AND IS NOT TO BE USED, IN WHOLE OR IN PART, FOR ANY OTHER PROJECT WITHOUT THE WRITTEN AUTHORIZATION.

VERIFY SCALES
BAR IS ONE INCH ON ORIGINAL DRAWING
0 1"
IF NOT ONE INCH ON THIS SHEET, ADJUST SCALES ACCORDINGLY.

BIG CREEK BASIN
TO COBB COUNTY DIVERSION
FORCE MAIN

CIVIL
STANDARD DETAILS

SHEET	12 OF 21
DWG NO.	C-11
DATE	MAY 2007
PROJ NO.	01107-42

Mulching Application Requirements		
Material	Rate	Depth
Straw or hay	2 ½ Ton/Acre	6" to 10"
Wood waste, chips, sawdust, bark	6 to 9 Ton/Acre	2" to 3"
Cutback asphalt	1200 gal./acre or ¼ gal./sq. yd.	—
Polyethylene film	Secure with soil, anchors, weights	—
Cutback asphalt	See manufacturer's recommendations	—
Geotextiles, jute matting, netting, etc.	See manufacturer's recommendations	—

MAINTENANCE NOTES:
- Add mulch as needed to maintain the suggested depth.
- If organic mulch is to be left and incorporated into the soil, apply 20-30 pounds of Nitrogen in addition to the fertilizer required for vegetation.

Ds1 DISTURBED AREA STABILIZATION (WITH MULCHING ONLY)

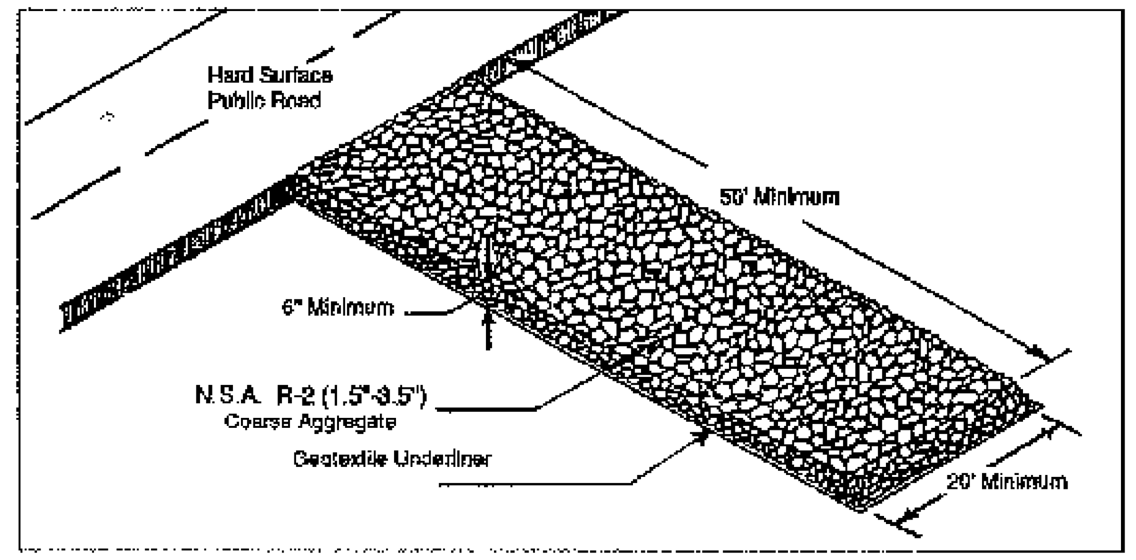

NOTES
1. STONE WILL BE IN ACCORDANCE WITH NATIONAL STONE ASSOCIATION R-2 (1.5 TO 3.5 INCH STONE).
2. THE GRAVEL PAD SHALL HAVE A MINIMUM THICKNESS OF 6 INCHES.
3. MINIMUM SIZE 20'x50'
4. INSTALL GEOTEXTILE UNDERLINER PRIOR PLACEMENT OF STONE.
5. IF NECESSARY, INCLUDE WASHING
6. MAY REQUIRE PERIODIC TOP DRESSING WITH 1.5 – 3.5 INCH STONE, AS CONDITIONS DEMAND.
7. MAINTAIN IN A CONDITION WHICH WILL PREVENT TRACKING OR FLOW OF MUD ONTO PUBLIC ROAD OR PRIVATE PROPERTY.

MAINTENANCE NOTES:
- Periodically dress with 1.5"-3.5" stone.
- Maintain in a condition that will prevent tracking or flow of mud onto public rights-of-way.
- Immediately remove mud and debris tracked or spilled onto roadways.

Co CONSTRUCTION ENTRANCE/EXIT DETAIL

N.T.S.

3" NOTICE

VEHICLES TRACKING MUD ONTO THE STREET ARE IN VIOLATION OF THE CODE OF ORDINANCES FOR THE CITY OF ROSWELL, GEORGIA. VIOLATORS WILL BE PROSECUTED WITH A FINE UP TO $2,500.00 AND 60 DAYS IN JAIL OR LABOR IN PUBLIC WORKS DEPT. OR ANY COMBINATION THEREOF, WITH EACH OCCURENCE. USE WATERHOSE PROVIDED TO WASH MUD FROM YOUR TIRES PRIOR TO LEAVING THE CONSTRUCTION SITE EXIT. THANK YOU !

(TYP.) 2" — 48" — 48"

NOTES:
1. IN ADDITION TO THIS SIGN, A TEMPORARY WATER SUPPLY WITH A WATER HOSE, SHALL BE INSTALLED AT ALL CONSTRUCTION SITE EXITS.
2. SIGN MATERIALS TO BE, NOT LESS THAN 1/2" DURA-PLY PLYWOOD.
3. SIGN LETTERING TO BE " UPPER CASE " TYPICAL.

City of Roswell
ENGINEERING DIVISION

CONSTRUCTION EXIT SIGN

CONSTRUCTION EXIT SIGN

N.T.S.

SEEDING RATES FOR TEMPORARY SEEDINGS					
Species	Rate Per 1,000 sq. ft.	Rate Per Acre	Planting Dates: Mts.–L'stone	Planting Dates: Piedmont	Planting Dates: Coastal
Rye	3 pounds	2–3 bu.	8/1 – 12/1	9/1 – 1/1 3/1 – 4/1	10/1 – 3/1 3/1 – 4/1
Ryegrass	1 pound	40–50 lbs.	8/1 – 12/1	8/15 – 1/1	8/15 – 3/1
Rye and Annual Lespedeza	1 1/2 pounds 1/2 pound	1–1 1/2 bu. 10–25 lbs.	3/1 – 4/1 3/1 – 4/1	3/1 – 4/1 3/1 – 4/1	2/1 – 3/1 2/1 – 3/1
Weeping Lovegrass	0.2 pounds	4–6 lbs.	3/15 – 8/1	3/1 – 8/15	2/15 – 8/15
Sudangrass	1 pound	35–40 lbs.	4/1 – 8/1	4/1 – 2/15	4/1 – 7/15
Browntop Millet	1 pound	30–40 lbs.	4/1 – 7/1	4/1 – 7/15	4/1 – 7/15
Wheat	3 pounds	2–3 bu.	10/1 – 12/1	10/15 – 1/1	11/1 – 1/15

Unusual site conditions may require heavier seeding rates.
Seeding rates may need to be altered to fit temperature variations and local conditions.

REFERENCE:
GEORGIA EROSION CONTROL MANUAL

ESTABLISHING A TEMPORARY VEGETATIVE COVER WITH FAST GROWING SEEDINGS

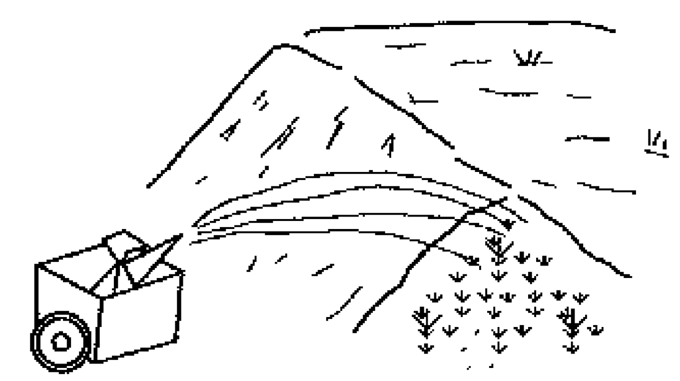

- ≤ 12 MONTHS OR UNTIL ESTABLISHMENT OF FINISHED GRADE OR PERMANENT VEGETATION
- SITE PREPARATION
  - GRADING AND SHAPING
  - SEEDED PREPARATION
  - APPLY LIME AND FERTILIZER
  - PLANT SEEDING, SELECT SPECIES BY SEASON AND REGION
  - APPLY MULCHING MATERIAL IF NEEDED
  - IRRIGATE IF NEEDED BUT NOT AT RATE TO CAUSE EROSION
  - THE APPROPRIATE SPECIES TO PLANT BASED UPON TIME OF PLANTING AND CHART.

MAINTENANCE NOTE:
- Re seed areas where an adequate stand of temporary vegetation fails to emerge or where a poor stand exists.

GEORGIA REGISTERED PROFESSIONAL ENGINEER No. 022251 MICHAEL C. LEUNG

Ds2 DISTURBED AREA STABILIZATION (WITH TEMPORARY SEEDINGS)

MAINTENANCE NOTES:
- Re-seed areas where an adequate stand of vegetation fails to emerge or where a poor stand exists.
- Apply one ton of agricultural lime as indicated by soil test or every 4-6 years.
- Mow Bermuda, Bahia and as desired. Mow Sericea Lespedeza only after frost to ensure seeds are mature.
- Maintain 6" or more of top growth.

Ds3 DISTURBED AREA STABILIZATION (WITH PERMANENT VEGETATION)

Table 1. Some Permanent Plant Species, Seeding Rates, and Planting Dates

Species	Rates per Acre	Rates per 1,000 sq. ft.	Planting Dates by Region: M-L	P	C	Remarks
Bahia, Pensacola Alone or with temporary cover With other perennials	60 lbs. 30 lbs.	1.4 lbs. 0.7 lbs.	—	4/1-5/31	3/1-5/31	Low growing; sod producing; will spread into Bermuda lawns.
Bahia, Wilmington Alone or with temporary cover With other perennials	60 lbs. 30 lbs.	1.4 lbs. 0.7 lb.	3/15-5/31	3/1-5/31		Same as above.
Bermuda, Common (Hulled seed) Alone With other perennials	10 lbs. 6 lbs.	0.2 lb. 0.1 lb.		4/1-5/31	3/15-5/31	Quick cover; low growing and forming; needs full sun.
Bermuda, Common (Unhulled seed) With temporary cover With other perennials	10 lbs. 6 lbs.	0.2 lb. 0.1 lb.	—	10/15-2/28	11/1-1/31	Plant with Winter annuals. Plant with Tall Fescue
Bermuda Sprigs (Common Sod and Forage hybrids)	40 cu. ft. Sod plugs 3"x3"	0.9 cu. ft.	4/15-6/15	4/1-6/15	4/1-5/31	1 cu. ft. = 650 sprigs 1 bu. = 1.25 cu. ft. or 800 sprigs

Table 1. Some Permanent Plant Species, Seeding Rates, and Planting Dates (Continued)

Species	Rates per Acre	Rates per 1,000 sq. ft.	Planting Dates by Region: M-L	P	C	Remarks
Crown Vetch With winter annuals or cool season grasses	15 lbs.	0.3 lb.	9/1-10/15	9/15-10/15	—	Mix with 30 lbs. Tall Fescue or 15 lbs. Rye; inoculate seed; plant only north of Atlanta.
Fescue, Tall Alone With other perennials	50 lbs. 30 lbs.	1.1 lbs. 0.7 lb.	3/1-4/1 or 8/15-10/30	8/15-10/15 or 3/15-4/15	—	Mix with perennial Lespedezas or Crown Vetch; not for droughty soils or heavy use areas.
Lespedeza, Sericea Scarified	60 lbs.	1.4 lbs.	4/1-5/31	3/15-5/31	3/1-5/15	Widely adapted and low maintenance; takes 2-3 years to establish; inoculate seed with EL inoculant; mix with Weeping Lovegrass, Common Bermuda, Bahia or Tall Fescue.

Table 1. Some Permanent Plant Species, Seeding Rates, and Planting Dates (Continued)

Species	Rates per Acre	Rates per 1,000 sq. ft.	Planting Dates by Region: M-L	P	C	Remarks
Lespedeza, Sericea (cont.) Unscarified	75 lbs.	1.7 lbs.	9/1-2/28	9/1-2/29	9/1-2/28	Mix with Tall Fescue or winter annuals.
Seed-bearing hay	3 tons	138 lbs.	10/1-2/28	10/1-2/28	9/15-1/15	Cut when seed is mature but before it shatters. Add Tall Fescue or winter annuals.
Lespedeza, Ambro Virgata or Appalow Scarified	60 lbs.	1.4 lbs.	4/1-2/15	3/15-5/31	3/1-5/15	Spreading growth with height of 18"-24"; good in urban areas; slow to develop good stand; mix with Weeping Lovegrass, Common Bermuda, Bahia Tall Fescue or winter annuals; do not mix with Sericea Lespedeza; inoculate seed with EL inoculant.
Unscarified	75 lbs.	1.7 lbs.	9/1-2/28	9/1-2/29	9/1-2/28	

Table 1. Some Permanent Plant Species, Seeding Rates, and Planting Dates (Continued)

Species	Rates per Acre	Rates per 1,000 sq. ft.	Planting Dates by Region: M-L	P	C	Remarks
Lespedeza, Shrub (Lespedeza Bicolor or Lespedeza Thunbergii) Plants	3'x3' spacing		11/1-3/31	11/1-3/15	11/15-2/28	Plant in small clumps for wildlife food and cover.
Lovegrass, Weeping Alone With other perennials	4 lbs. 2 lbs.	0.1 lb. 0.05 lb.	4/1-5/31	3/15-5/31	3/1-5/31	Quick cover, drought tolerant; grows well with Sericea Lespedeza on road-banks and other steep slopes; short lived.
Maidencane sprigs	2'x3' spacing		2/1-3/31	2/1-3/31	2/1-3/31	For very wet sites such as riverbanks and shorelines. Dig sprigs locally.
Panicgrass, Atlantic Coastal	20 lbs.	0.5 lb.	—	3/1-4/30	3/1-4/30	Grows well on coastal sand dunes; mix with Sericea Lespedeza but not on sand dunes.
Reed Canary Grass Alone With other perennials	50 lbs. 30 lbs.	1.1 lbs. 0.7 lb.	8/15-10/15	9/1-10/15	—	Grows similar to Tall Fescue; for wet sites.

Table 1. Some Permanent Plant Species, Seeding Rates, and Planting Dates (Continued)

Species	Rates per Acre	Rates per 1,000 sq. ft.	Planting Dates by Region: M-L	P	C	Remarks
Sunflower, Aztec Maximilian	10 lbs.	0.2 lb.	4/15-5/31	4/15-5/31	4/1-5/31	Mix with Weeping Lovegrass or other low growing grasses or legumes.
Switchgrass	20 lbs.	0.4 lb.	4/1-5/31	4/1-5/31	4/1-5/31	For streambank plantings, drainage ditches, and wet areas

1. Rates are for broadcasted seed. If a seed drill is used, reduce the rates by one-half.
2. PLS is an abbreviation for Pure Live Seed. Refer to the Glossary for an explanation of this term.
3. The resource areas are defined in the Glossary. See page 41 for your Resource Area.

Table 2.
Suggested Seedbed Depths

Slope	Seedbed Depth
3:1 or Flatter	Less than 4" Depth
2:1 to 3:1	1" to 4" Depth
2:1 or Steeper	Depressions every 6"-8" hand dug, if necessary

Table 3.
Fertilizer Requirements for Permanent Vegetation

Types of Species	Planting Year	Fertilizer (N-P-K)	Rate (lbs./acre)	N Top Dressing Rate (lbs./acre)
Cool season grasses	First Second Maintenance	6-12-12 6-12-12 10-10-10	1500 1000 400	50-100 — 30
Cool season grasses & legumes	First Second Maintenance	6-12-12 0-10-10 0-10-10	1500 1000 400	0-50 — —
Warm season grasses	First Second Maintenance	6-12-12 6-12-12 10-10-10	1500 800 400	50-100 50-100 30
Warm season grasses and legumes	First Second Maintenance	6-12-12 0-10-10 0-10-10	1500 1000 400	50 — —

KHAFRA ENGINEERING CONSULTANTS, INC. 230 PEACHTREE STREET, SUITE 200 ATLANTA, GEORGIA 30303 404-525-2120 FAX 404-522-7941	DSGN MCLG DR ELBN CHK MCLG APVD MCLG	NO. / DATE / REVISION / BY / APVD	

REUSE OF DOCUMENTS
THIS DOCUMENT, AND THE IDEAS AND DESIGNS INCORPORATED HEREIN, AS AN INSTRUMENT OF PROFESSIONAL SERVICE, IS THE PROPERTY OF KHAFRA AND IS NOT TO BE USED, IN WHOLE OR IN PART, FOR ANY OTHER PROJECT WITHOUT THE WRITTEN AUTHORIZATION.

VERIFY SCALES
BAR IS ONE INCH ON ORIGINAL DRAWING
0 — 1"
IF NOT ONE INCH ON THIS SHEET, ADJUST SCALES ACCORDINGLY.

BIG CREEK BASIN TO COBB COUNTY DIVERSION FORCE MAIN

CIVIL

STANDARD DETAILS

SHEET 13 OF 21
DWG NO. C-12
DATE MAY 2007
PROJ NO. 01107-42

Table 6H-2. Meaning of Symbols on Typical Application Diagrams

- Arrow panel
- Arrow panel support or trailer
- (Changeable message sign)
- Direction of traffic
- Direction of temporary traffic detour
- Flagger
- High-level warning device (Flag tree)
- Luminaire
- Pavement markings that should be removed for a long-term project
- Sign (Shown facing left)
- Temporary barrier
- Temporary barrier with warning lights
- Surveyor
- Traffic or Pedestrian signal
- Truck-mounted attenuator
- Type III Barricade
- Crash Cushion
- Changeable message sign or support trailer
- Warning lights
- Work space
- Work vehicle

Table 6H-3. Meaning of Letter Codes on Typical Application Diagrams

Road Type	Distance Between Signs**		
	A	B	C
Urban (low speed)*	30 (100)	30 (100)	30 (100)
Urban (high speed)*	100 (350)	100 (350)	100 (350)
Rural	150 (500)	150 (500)	150 (500)
Expressway / Freeway	900 (1,000)	450 (1,500)	800 (2,640)

* Speed category to be determined by highway agency

** Distances are shown in meters (feet). The column headings A, B, and C are the dimensions shown in Figures 6H-1 through 6H-40. The A dimension is the distance from the transition or point of restriction to the first sign. The B dimension is the distance between the first and second signs. The C dimension is the distance between the second and third signs. (The third sign is the first sign in a three-sign series encountered by a driver approaching a temporary traffic control zone.)

Formulas for L are as follows:

For speed limits of 62 km/h (40 mph) or less:

$$L = \frac{WS^2}{155} \qquad (L = \frac{WS^2}{60})$$

For speed limits of 70 km/h (45 mph) or greater:

$$L = \frac{WS}{1.6} \qquad (L = WS)$$

Where: L = taper length in meters (feet)

W = width of offset in meters (feet)

S = posted speed limit, or off-peak 85th-percentile speed prior to work starting, or the anticipated operating speed in km/h (mph)

Figure 6H-1. Work Beyond the Shoulder (TA-1)

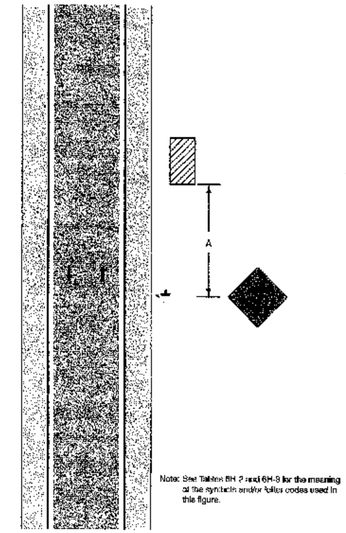

Typical Application 1

Figure 6H-4. Short-Duration or Mobile Operation on Shoulder (TA-4)

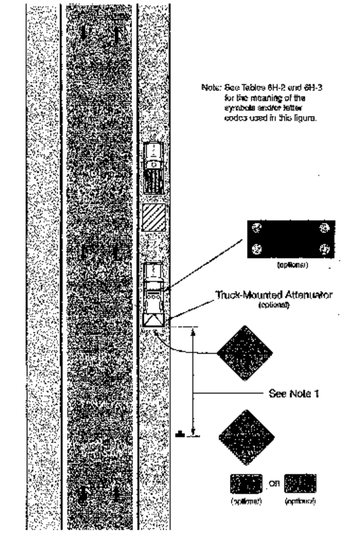

Typical Application 4

Figure 6H-8. Shoulder Work with Minor Encroachment (TA-6)

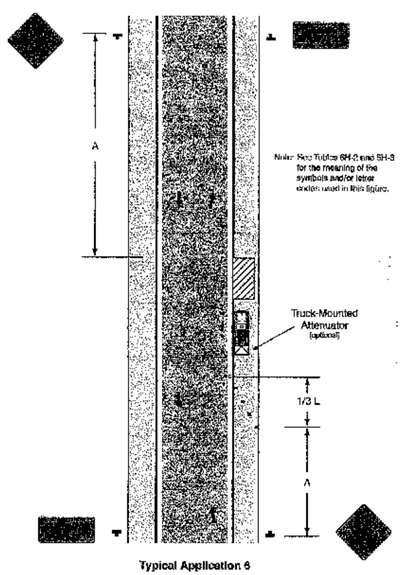

Typical Application 6

Figure 6H-18. Lane Closure on Minor Street (TA-18)

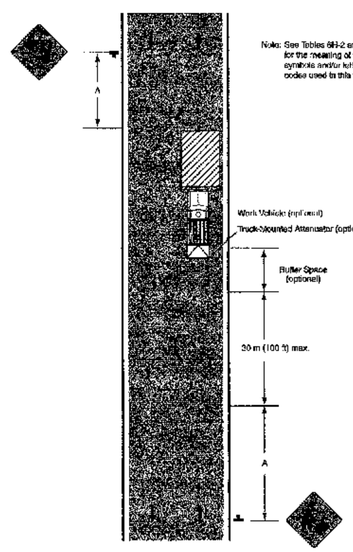

Typical Application 18

CITY OF ROSWELL TRAFFIC CONTROL PLAN NOTES:

1. CONTRACTOR'S HOURS OF OPERATION SHALL BE LIMITED FROM 7:00 AM TO 7:00 PM.
2. IN THE EVENT OF ROAD CLOSURE, AT LEAST ONE LANE SHALL REMAIN OPEN TO TRAFFIC AT ALL TIMES DURING CONSTRUCTION. ALL LANES SHALL BE REOPENED TO TRAFFIC AFTER 7:00 PM. ROAD, LANE OR SHOULDER CLOSURE SHALL REQUIRE PRIOR APPROVAL BY THE CITY OF ROSWELL DEPARTMENT OF TRANSPORTATION. **LANE CLOSURES SHALL BE LIMITED TO THE HOURS OF 9:AM TO 4:00 PM ONLY. ABSOLUTELY NO LANE CLOSURE DURING THE PEAK HOURS OF 7:00AM–9:00 AM & 4:00–8:00PM**
3. SIGNS AND WARNING DEVICES SHALL BE INSTALLED IN ACCORDANCE WITH THE MANUAL ON UNIFORM TRAFFIC CONTROL DEVICES (MUTCD).
4. ALL FLAGGERS ASSIGNED TO DIRECT TRAFFIC SHALL BE DULY CERTIFIED.
5. PRIOR TOSTART OFCONSTRUCTION, THE CONTRACTOR SHALL SUBMIT **DETAILED TRAFFIC CONTROL PLAN** IN CONJUNCTION WITH THEIR MEANS AND METHODS ON HOW TO EXECUTE THE WORK. THE TCP SHALL BE APPROVED BY THE CITY OF ROSWELL DEPARTMENT OF TRANSPORTATION. CONSTRUCTION SHALL NOT PROCEED UNLESS THE TCP IS APPROVED BY THE CITY.
6. CONTRACTOR SHALL INCLUDE THE COST OF IMPLEMENTING THE TRAFFIC CONTROL PLAN AS PART OF THE UNIT PRICE BID FOR EACH PARTICULAR ITEM OF WORK. NO SEPARATE PAYMENT SHALL BE MADE FOR PROVIDING TRAFFIC CONTROL.

GEORGIA REGISTERED No. 022854 PROFESSIONAL ENGINEER MICHAEL C. LEUNG

KHAFRA ENGINEERING CONSULTANTS, INC.
230 PEACHTREE STREET, SUITE 200
ATLANTA, GEORGIA 30303
404-522-2120 FAX 404-522-7941

DSGN	MCLG
DR	ELBN
CHK	MCLG
APVD	ELBN

NO.	DATE	REVISION	BY	APVD

REUSE OF DOCUMENTS
THIS DOCUMENT, AND THE IDEAS AND DESIGNS INCORPORATED HEREIN, AS AN INSTRUMENT OF PROFESSIONAL SERVICE, IS THE PROPERTY OF KHAFRA AND IS NOT TO BE USED, IN WHOLE OR IN PART, FOR ANY OTHER PROJECT WITHOUT THE WRITTEN AUTHORIZATION.

VERIFY SCALES
BAR IS ONE INCH ON ORIGINAL DRAWING
0 1"
IF NOT ONE INCH ON THIS SHEET, ADJUST SCALES ACCORDINGLY.

BIG CREEK BASIN
TO COBB COUNTY DIVERSION
FORCE MAIN

CIVIL

TRAFFIC CONTROL PLAN

SHEET	14 OF 21
DWG NO.	C-13
DATE	MAY 2007
PROJ NO.	01107-42

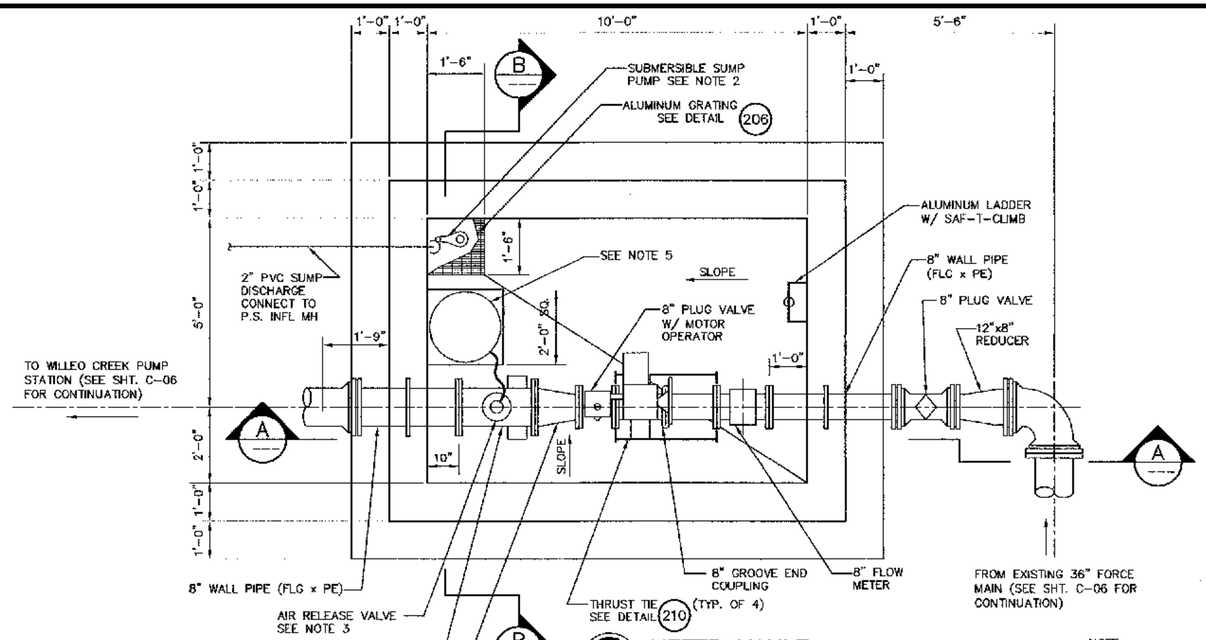

METER VAULT BOTTOM PLAN

NORTH 1/2"=1'-0"

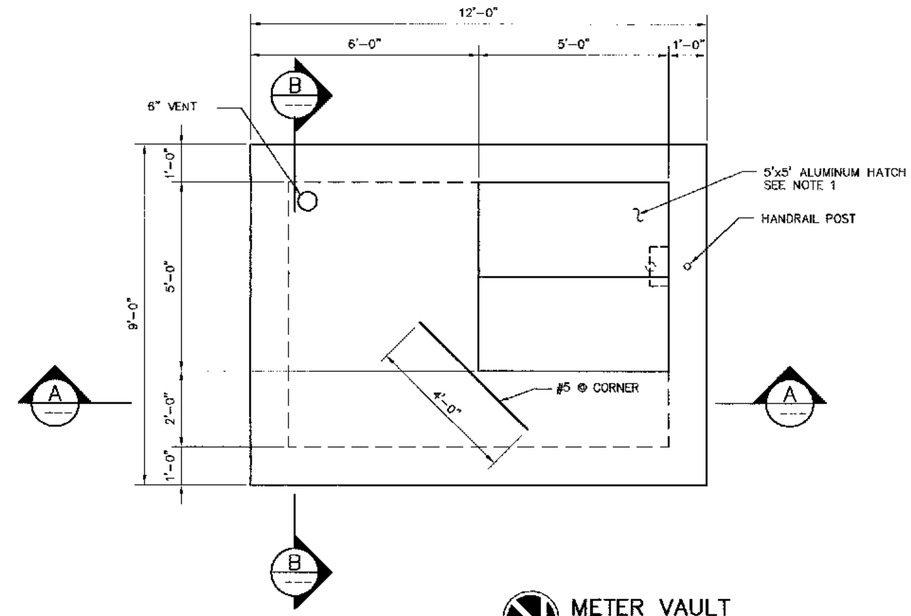

METER VAULT TOP PLAN

NORTH 1/2"=1'-0"

NOTE:

1. WATER RESISTANT 3000 PSF RATED TYPE JD-AL BY BILCO OR EQUAL.
2. WEIL MODEL 1431 SUBMERSIBLE PUMP W/ 8245 PIGGYBACK TETHERED LEVEL CONTROL OR EQUAL.
3. CRISPIN MODEL PX20 W/ 1/4" ORFICE OR EQUAL. CONNECT OUTLET TO ODOR SCRUBBER.
4. PVC VALVES ON SUMP PUMP DISCHARGE SHALL BE TRUE UNION BALL & BALL CHECK VALVES BY HAYWARD FLOW CONTROL SYSTEM OR EQUAL.
5. ODOR SCRUBBER, PASSIVE MODEL DS100 BY ENVIROMENTAL SYSTEMS OR EQUAL.

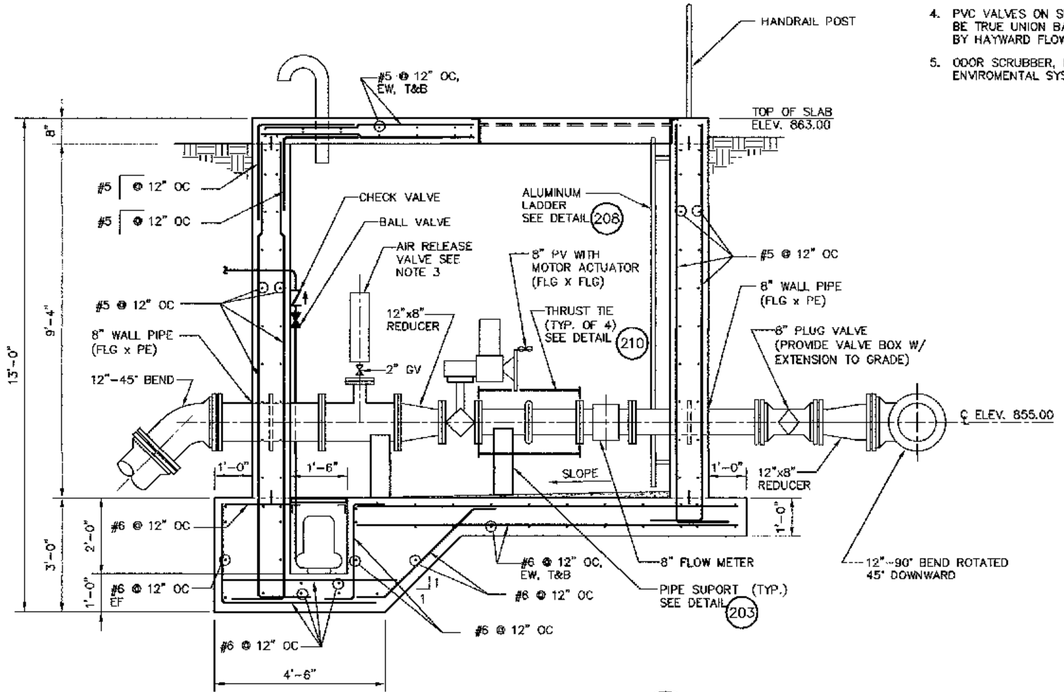

SECTION A

1/2"=1'-0"

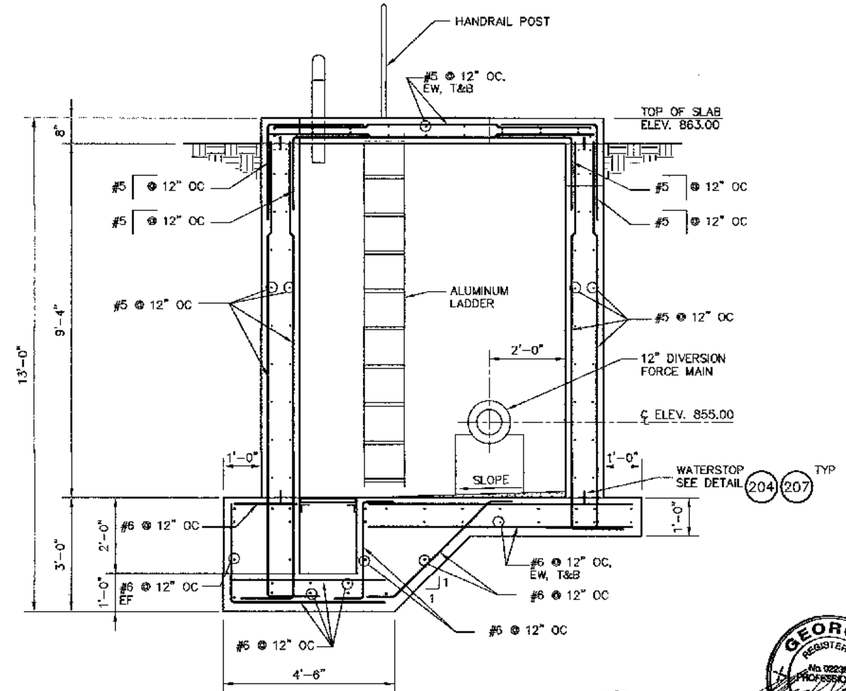

SECTION B

1/2"=1'-0"

GEORGIA REGISTERED No. 022394 PROFESSIONAL ENGINEER MICHAEL C. LEUNG 5/16/07

KHAFRA ENGINEERING CONSULTANTS, INC. 230 PEACHTREE STREET, SUITE 200 ATLANTA, GEORGIA 30303 404-525-2120 FAX 404-522-7941	DSGN MCLG					
	DR ELBN/DMML					
	CHK MCLG					
	APVD MCLG	NO.	DATE	REVISION	BY	APVD

REUSE OF DOCUMENTS

THIS DOCUMENT, AND THE IDEAS AND DESIGNS INCORPORATED HEREIN, AS AN INSTRUMENT OF PROFESSIONAL SERVICE, IS THE PROPERTY OF KHAFRA AND IS NOT TO BE USED, IN WHOLE OR IN PART, FOR ANY OTHER PROJECT WITHOUT THE WRITTEN AUTHORIZATION.

VERIFY SCALES

BAR IS ONE INCH ON ORIGINAL DRAWING
0 1"
IF NOT ONE INCH ON THIS SHEET, ADJUST SCALES ACCORDINGLY.

BIG CREEK BASIN
TO COBB COUNTY DIVERSION FORCE MAIN

MECHANICAL/STRUCTURAL

PROPOSED METER VAULT

SHEET 15 OF 21
DWG NO. M/S-01
DATE MAY 2007
PROJ NO. 01107-42

GENERAL STRUCTURAL NOTES

REINFORCING NOTES

1. THE MINIMUM REINFORCING FOR ALL CONCRETE WALLS AND SLABS SHALL BE AS FOLLOWS:

WALL THICKNESS	REINF EACH WAY	LOCATION
6"	#4@12"	CENTERED
8"	#5@12"	CENTERED
10"	#4@12"	EACH FACE
12"	#5@12"	EACH FACE

PROVIDE LARGER SECTIONS AND MORE REINFORCING IN ALL SECTIONS OF CONCRETE WHERE REQUIRED BY THE DETAILS ON THE DRAWINGS OR BY THE SPECIFICATIONS.

2. CLEARANCE FOR REINFORCEMENT BARS, UNLESS SHOWN OTHERWISE, SHALL BE:
   WHEN PLACED ON GROUND---3"
   EXPOSED TO WATER, WEATHER, BACKFILL OR CONDENSATION:
   #5 BAR OR SMALLER---1½"
   #6 BAR OR LARGER---2"
   INTERIOR DRY SURFACES:
   SLABS------¾"
   BEAMS-----1½"
   COLUMNS---1½"
   WALLS-----1"
3. REFER TO WALL CORNER AND WALL INTERSECTION REINFORCING DETAIL. IN GENERAL, THE WALL CORNER REINFORCING SIZES AND SPACINGS SHALL BE CALLED OUT ON THE PLANS AND REFERENCED TO THESE DETAILS AND THE TYPICAL HORIZONTAL WALL REINFORCING SHALL LAP WITH THE HORIZONTAL REINFORCING.
4. ALL BENDS, UNLESS OTHERWISE SHOWN, SHALL BE A 90 DEGREE STANDARD HOOK AS DEFINED IN THE LATEST EDITION OF ACI 318.
5. AT WALL CORNER AND WALL INTERSECTION REINFORCEMENT BARS SHALL BE CONTINUOUS AROUND CORNERS AND THROUGH COLUMNS OR PILASTERS. REINFORCEMENT SHALL BE EXTENDED INTO CONNECTING WALLS AND LAPPED ON THE OPPOSITE FACE OF THE CONNECTING WALLS, AS INDICATED ELSEWHERE ON THIS SHEET.
6. VERTICAL WALL BARS SHALL BE LAPPED WITH DOWELS FROM BASE SLABS. PROVIDE A MINIMUM OF TWO FULL HEIGHT VERTICAL BARS WITH MATCHING DOWELS AT WALL ENDS, CORNERS AND INTERSECTIONS WITH SIZE TO MATCH TYPICAL VERTICAL REINFORCING STEEL SHOWN OR REQUIRED BY NOTES ABOVE.
7. UNLESS INDICATED OTHERWISE, CONTRACTOR MAY SPLICE CONTINUOUS SLAB OR LONGITUDINAL BEAM BARS AT LOCATIONS OF HIS CHOOSING, EXCEPT THAT TOP BAR SPLICES SHALL BE LOCATED AT MIDSPAN AND BOTTOM BAR SPLICES SHALL BE LOCATED AT SUPPORTS. ALL REINFORCEMENT BENDS AND LAPS, UNLESS OTHERWISE NOTED, SHALL SATISFY THE FOLLOWING MINIMUM REQUIREMENTS:

DETAIL OF REINFORCEMENT – LAP LENGTHS

BAR SIZE		#6 OR SMALLER	#7	#8	#9	#10	#11
CONC DESIGN STRENGTH		3000 PSI					
GR 40	TOP BAR *	34 DIA, MIN 1'-6"	3'-0"	3'-9"	4'-8"	6'-0"	7'-3"
	OTHER BAR	24 DIA, MIN 1'-0"	2'-0"	2'-8"	3'-4"	4'-4"	5'-2"
GR 60	TOP BAR *	49 DIA, MIN 2'-0"	4'-2"	5'-6"	7'-0"	8'-8"	10'-10"
	OTHER BAR	35 DIA, MIN 1'-6"	3'-0"	4'-0"	5'-0"	6'-6"	7'-9"
CONC DESIGN STRENGTH		3500 PSI					
GR 40	TOP BAR *	33 DIA, MIN 1'-6"	2'-9"	3'-6"	4'-4"	5'-6"	6'-8"
	OTHER BAR	24 DIA, MIN 1'-0"	1'-10"	2'-6"	3'-2"	4'-0"	4'-10"
GR 60	TOP BAR *	47 DIA, MIN 2'-0"	3'-10"	5'-2"	6'-6"	8'-2"	10'-0"
	OTHER BAR	34 DIA, MIN 1'-6"	2'-10"	3'-9"	4'-8"	6'-0"	7'-3"
CONC DESIGN STRENGTH		4000 PSI					
GR 40	TOP BAR *	32 DIA, MIN 1'-6"	2'-6"	3'-3"	4'-0"	5'-0"	6'-4"
	OTHER BAR	22 DIA, MIN 1'-0"	1'-9"	2'-4"	3'-0"	3'-8"	4'-6"
GR 60	TOP BAR *	45 DIA, MIN 2'-0"	3'-8"	4'-9"	6'-0"	7'-8"	9'-6"
	OTHER BAR	32 DIA, MIN 1'-6"	2'-8"	3'-6"	4'-4"	5'-6"	6'-9"

* TOP BARS SHALL BE DEFINED AS ANY HORIZONTAL BARS PLACED SUCH THAT MORE THAN 12" OF FRESH CONCRETE IS CAST IN THE MEMBER BELOW THE BAR, IN ANY SINGLE POUR. HORIZONTAL WALL BARS ARE CONSIDERED TOP BARS.

8. CONTINUOUS WATERSTOP AS SPECIFIED, SHALL BE INSTALLED IN ALL CONSTRUCTION JOINTS IN WALLS OF WATER HOLDING BASINS AND CHANNELS, EXCEPT WHERE INDICATED OTHERWISE.
9. FOR FOUNDATION SLAB AND FOOTING BEDDING MATERIAL SEE SPECIFICATIONS.

CORNER AND INTERSECTION REINFORCING DETAILS NOTES

1. TYPICAL HORIZONTAL WALL CORNER AND INTERSECTION REINFORCING LAYOUT IS SHOWN TO AVOID CONGESTION AND PERMIT PROPER PLACEMENT, FOR SIZE AND SPACING SEE PLANS. ALL HORIZONTAL REINFORCING AT CORNERS AND INTERSECTIONS SHALL BE FABRICATED AND INSTALLED WITH SPLICES LOCATED WHERE SHOWN REGARDLESS OF BAR SIZE AND SPACING.
2. WHERE THE CORNER OR INTERSECTION REINFORCING SIZE AND SPACING IS NOT SHOWN, NOTED OR TABULATED ON THE PLANS, THE SIZE AND SPACING SHALL BE THE SAME AS THE WALL HORIZONTAL REINFORCING SHOWN ON THE WALL SECTIONS OR AS NOTED FOR THE REINFORCING BETWEEN THE CORNERS OR INTERSECTIONS.
3. EXCEPT WHERE OTHERWISE SHOWN ON THE DRAWINGS, THE LENGTH INDICATED AS "NOTE 3" SHALL BE THE LESSER OF D/4, 10 FEET, OR 1.0 TIMES THE HEIGHT OF THE WALL, EXCEPT THAT IN NO CASE SHALL IT BE LESS THAN 2.0 FEET.
4. D = LENGTH OF WALL PARALLEL TO THE BAR LENGTH IN QUESTION.
5. EXCEPT WHERE OTHERWISE SHOWN ON THE DRAWINGS, THE LENGTH INDICATED AS "NOTE 5" SHALL BE EQUAL TO ONE "LAP LENGTH" AS REQUIRED BY THE GENERAL STRUCTURAL NOTES. USE THE LAP LENGTH REQUIRED FOR THE SMALLER OF THE TWO REINFORCING BARS BEING SPLICED.
6. UNLESS OTHERWISE NOTED, "B" AND "C" BARS ARE THE SAME SIZE AND SPACING AND "F" AND "G" BARS ARE THE SAME SIZE AND SPACING.

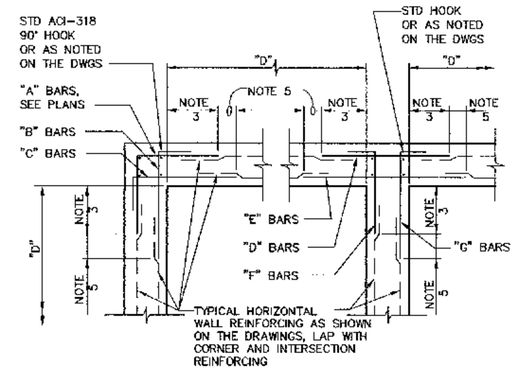

INTERSECTION REINFORCING

NTS (SEE PLANS FOR SIZE AND SPACING)

201

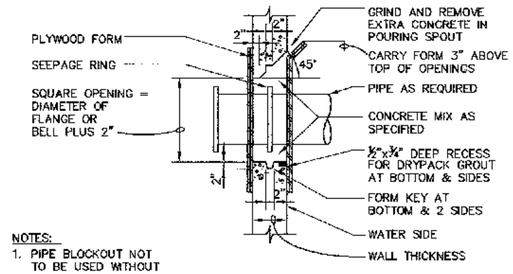

NOTES:
1. PIPE BLOCKOUT NOT TO BE USED WITHOUT PERMISSION OF ENGINEER UNLESS SPECIFICALLY INDICATED ON PLANS.
2. COAT CONCRETE ENCASED PORTION OF PIPE WITH SPECD COATING SYSTEM.

PIPE BLOCKOUT

NTS

202

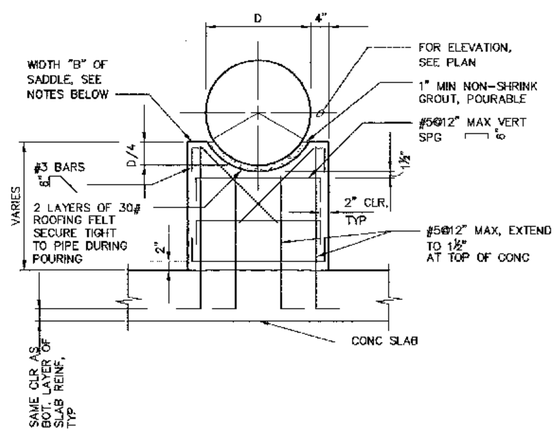

NOTES:
1. THICKNESS "B" OF SADDLE
   B=6" WHEN24≥D
   B=10" WHEN 42≥D>24
   B=12" WHEN D>42
2. FOR "B"=10" OR THICKER, USE 2 LAYERS OF REINF, TURN TURN HORIZ BARS 90° TO HOOK AROUND VERTS ⊏⊐.
   1½" CLR OF CONCRETE THICKNESS "B" OF SADDLE

CONCRETE PIPE SUPPORT

NTS

203

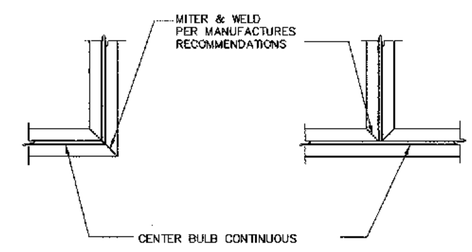

TYPICAL PLASTIC WS SPLICE

NTS

204

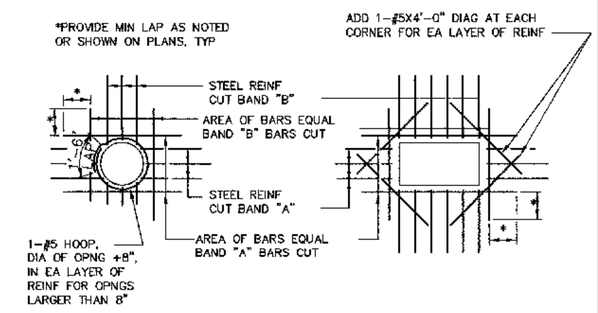

NOTES:
1. TYPICAL FOR ALL OPENINGS IN CONCRETE WALLS AND SLABS UNLESS INDICATED OTHERWISE ON THE PLANS.
2. DO NOT WELD REINFORCEMENT TO PIPE SLEEVES AND INSERTS.

GEORGIA REGISTERED PROFESSIONAL ENGINEER No. 022254 MICHAEL C. LEUNG 07/06/07

OPENING REINFORCING

NTS

205

KHAFRA ENGINEERING CONSULTANTS, INC.
230 PEACHTREE STREET, SUITE 200
ATLANTA, GEORGIA 30303
404-525-2120 FAX 404-522-7841

DSGN	DOBD
DR	DMML
CHK	DOBD
APVD	MCLG

NO.	DATE	REVISION	BY	APVD

REUSE OF DOCUMENTS
THIS DOCUMENT, AND THE IDEAS AND DESIGNS INCORPORATED HEREIN, AS AN INSTRUMENT OF PROFESSIONAL SERVICE, IS THE PROPERTY OF KHAFRA AND IS NOT TO BE USED, IN WHOLE OR IN PART, FOR ANY OTHER PROJECT WITHOUT THE WRITTEN AUTHORIZATION.

VERIFY SCALES
BAR IS ONE INCH ON ORIGINAL DRAWING
0 1"
IF NOT ONE INCH ON THIS SHEET, ADJUST SCALES ACCORDINGLY.

EUGEN COUNTY

BIG CREEK BASIN
TO COBB COUNTY DIVERSION FORCE MAIN

STRUCTURAL

STANDARD DETAILS

SHEET	16 OF 21
DWG NO.	S-02
DATE	MAY 2007
PROJ NO.	01107-42

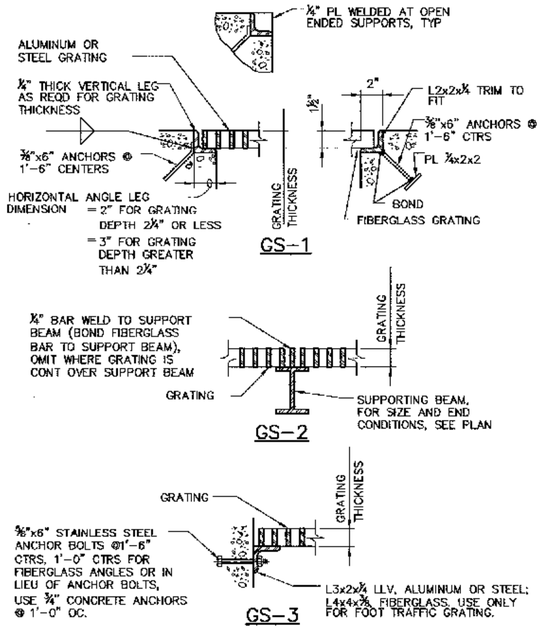

GRATING SUPPORT
NTS

GRATING NOTES

1. EXTEND GRATING CONTINUOUSLY OVER GATE GUIDES AND GATES.
2. NOTCH GRATING SUPPORTS AT GATES AS REQUIRED.
3. GRATING SPAN ——→ SEE PLAN.
4. WIDTH OF GRATING SECTIONS SHALL NOT EXCEED 3'-0".
5. SHOP DRAWINGS BASED ON FIELD DIMENSIONS SHALL BE SUBMITTED TO THE ENGINEER PRIOR TO FABRICATION.
6. MATERIAL FOR SUPPORTS OF STEEL AND ALUMINUM GRATING TO BE SAME GRATING, EXCEPT METAL SUPPORTS THAT ARE TO BE EMBEDDED IN CONCRETE SHALL BE TYPE 316 STAINLESS STEEL.
7. STEEL GRATING AND SUPPORT NOT EMBEDDED SHALL BE GALVANIZED UNLESS NOTED OTHERWISE ON PLANS.
8. UNLESS NOTED OTHERWISE ON PLANS, GRATING THICKNESS SHALL BE AS TABULATED IN "GRATING THICKNESS TABLE" FOR APPLICABLE TRAFFIC.
9. BEARING BAR THICKNESS FOR GRATING TO BE 3/16" MINIMUM.
10. BAND ALL EDGES WITH 3/16 x DEPTH OF BEARING BAR.
11. PROVIDE MISCELLANEOUS GRATING FASTENERS AS REQUIRED.
12. TYPE OF MATERIAL USED SHALL BE AS SHOWN ON PLANS OR AS SPECIFIED. THIS STANDARD DETAIL INCLUDES 3 TYPES, ALTHOUGH ALL 3 MAY NOT BE INCLUDED IN PROJECT.
13. THE HORIZONTAL CLEARANCE BETWEEN THE GRATING AND GRATING SUPPORTS SHALL NOT BE LESS THAN 3/16" NOR GREATER THAN ¼".
14. ALL GRATING SECTIONS, WHEN IN PLACE, SHALL ALWAYS BE FIRMLY ANCHORED TO THEIR SUPPORTS.

FOOT TRAFFIC
GRATING THICKNESS TABLE

MAXIMUM SPAN	ALUMINUM (IN.)	STEEL (IN.)	FIBERGLASS (IN.)
3'-6"	1 ¼"	1"	1 ½"
4'-0"	1 ½"	1"	1 ½"
4'-6"	1 ¾"	1"	1 ½"
5'-0"	1 ¾"	1 ¼"	MAXIMUM ALLOWABLE SPAN IS 4'-0" LIMIT DEFLECTION TO ¼" MAX
5'-6"	2"	1 ½"	
6'-0"	2 ¼"	1 ½"	
6'-6"	2 ¼"	1 ½"	
7'-0"	2 ½"	1 ¾"	

206

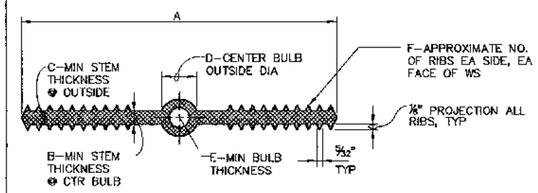

SIZE	A	B	C	D	E	F
4"x3/16"	4"	3/16"	3/16"	¾"	¼"	4
6"x⅜"	6"	⅜"	⅜"	⅞"	½"	6
9"x⅜"	9"	⅜"	⅜"	1"	½"	8

NOTES:
1. MATERIAL QUALITY PER SPECIFICATIONS.
2. DIM REQUIREMENTS INDICATED SHOULD BE GIVEN TO SUPPLIERS PRIOR TO PLACING ORDERS.
3. NON-ROUND CENTER BULBS SHALL HAVE A MIN OUTSIDE DIM OF 'D'.

PLASTIC WATERSTOP
NTS

207

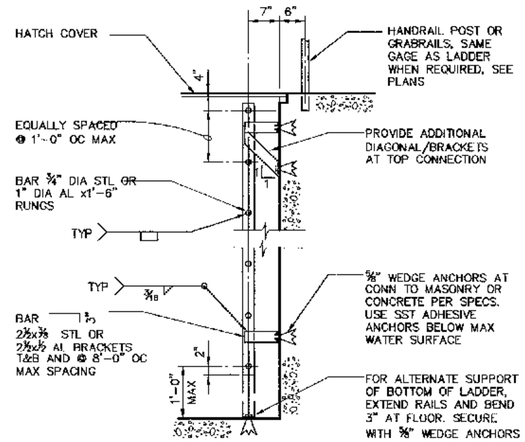

NOTES:
1. HOT DIP GALVANIZE STEEL AFTER FABRICATION.
2. PROVIDE PROTECTION FOR DISSIMILAR METALS AND CONCRETE PER SPECIFICATIONS.

LADDER
NTS

208

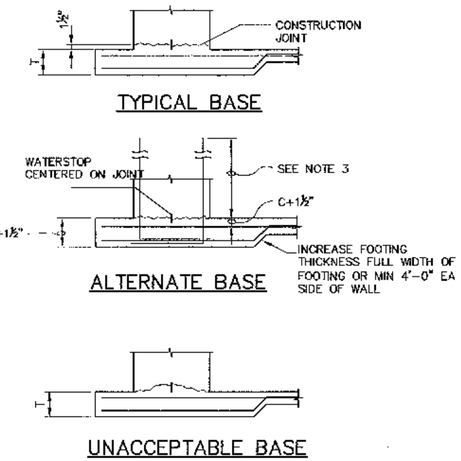

NOTES:
1. C-MIN CLR FOR REINF BARS, SEE GENERAL STRUCTURAL NOTES.
2. T-FOOTING THICKNESS AS DETAILED.
3. WHEN USING ALTERNATE BASE INCREASE DOWEL BARS TO PROVIDE SAME LAP LENGTH AS TYPICAL BASE.

WALL BASE CONSTRUCTION JOINT
NTS

209

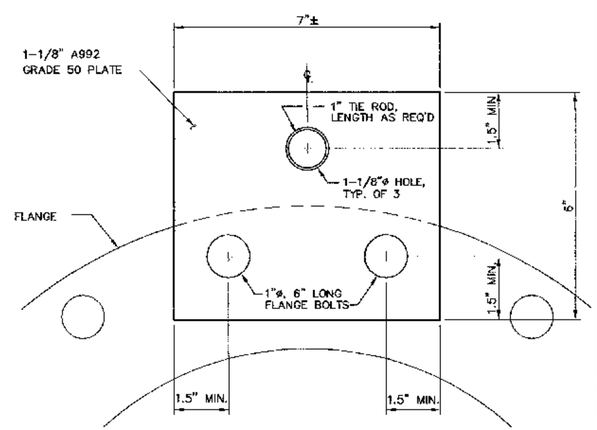

FLANGE PLATE
6"=1'-0"

210

211

212

GEORGIA REGISTERED No. 022854 PROFESSIONAL ENGINEER MICHAEL C. LEUNG

KHAFRA ENGINEERING CONSULTANTS, INC.
230 PEACHTREE STREET, SUITE 200
ATLANTA, GEORGIA 30303
404-525-2120 FAX 404-522-7941

DSGN	DOBD
DR	DMML
CHK	DOBD
APVD	MCLG

NO.	DATE	REVISION	BY	APVD

REUSE OF DOCUMENTS
THIS DOCUMENT, AND THE IDEAS AND DESIGNS INCORPORATED HEREIN, AS AN INSTRUMENT OF PROFESSIONAL SERVICE, IS THE PROPERTY OF KHAFRA AND IS NOT TO BE USED, IN WHOLE OR IN PART, FOR ANY OTHER PROJECT WITHOUT THE WRITTEN AUTHORIZATION.

VERIFY SCALES
BAR IS ONE INCH ON ORIGINAL DRAWING
0 1"
IF NOT ONE INCH ON THIS SHEET, ADJUST SCALES ACCORDINGLY.

BIG CREEK BASIN
TO COBB COUNTY DIVERSION FORCE MAIN

STRUCTURAL
STANDARD DETAILS

SHEET 17 OF 21
DWG NO. S-03
DATE MAY 2007
PROJ NO. 01107-42

LIGHTING FIXTURE SCHEDULE

SYMBOL	DESCRIPTION	VOLT	LAMPS			MOUNTING	MANUFACTURER	CAT. NO.
			NO.	TYPE	WATT			
☼	WALL MOUNTED FIXTURE RATED FOR OUTDOOR WET LOCATION WITH GLOBE LENS AND GUARD	120	1	VAPORTITE	150	WALL	HUBBEL	VWX-151

NOTE: FIXTURES SHALL HAVE ALL LAMPS BURNING AT FINAL INSPECTION (NORMAL AND EMERGENCY).

ABBREVIATIONS

TSP = TWISTED SHIELDED PAIR
MSC = MANUFACTURER SUPPLIED CABLE
GND = GROUND
FCV = FLOW CONTROL VALVE
FE = FLOW ELEMENT
FIT = FLOW INDICATING TRANSMITTER
PB = PUSH BUTTON
GRS = GALVANIZED RIGID STEEL
SST = STAINLESS STEEL
LSH = LEVEL SWITCH HIGH

GENERAL NOTES:

1. MINIMUM POWER CIRCUIT WIRE SIZE SHALL BE #12 AND MINIMUM CONDUIT SIZE SHALL BE 3/4" RIGID STEEL GALVANIZED CONDUIT. SEE SPECIFICATIONS FOR TYPE OF INSULATION.
2. MOUNTING HEIGHTS OF ALL WALL DEVICES SHALL BE AS FOLLOWS UNLESS OTHERWISE NOTED. WALL SWITCHES 4'-0" A.F.F.GENERAL RECEPTACLES 1'-6" A.F.F. EXIT LIGHT J-BOX 1'-0" ON CENTER LINE ABOVE DOOR TELEPHONE OUTLET: 1'-6" A.F.F.
3. THE CONTRACTOR SHALL CHECK ALL LIGHTING LUMINARIES FOR EXACT TYPE MOUNTING AND SPACE REQUIRED BEFORE ROUGHING IN. REFER TO APPROPRIATE LIGHTING DRAWINGS AND LIGHTING FIXTURE SCHEDULE.
4. ALL BRANCH CIRCUITS SHALL INCLUDE A GREEN COVERED GROUND WIRE SIZE PER N.E.C. ARTICLE 250 (GROUNDING) OR AS SHOWN ON DWGS. MULTIPLE WIRE BRANCH CIRCUITS WITH COMMON NEUTRAL AND NON-ISOLATED GROUND REQUIRED ONLY ONE GROUND WIRE. ISOLATED GROUND WIRE FOR EACH BRANCH CIRCUIT SHALL BE INITIATED FROM ISOLATED GROUND BUS IN THE PANELBOARD.
5. ELECTRICAL CONTRACTOR SHALL WORK CLOSELY WITH GENERAL CONTRACTOR AND VERIFY EXACT TYPE OF EQUIPMENT TO BE INSTALLED AND THE DIMENSIONS WHICH MAY AFFECT THE EXACT PLACEMENT OF ELECTRICAL WORK.
6. ELECTRICAL CONTRACTOR SHALL CIRCUIT ALL RECEPTACLES & LIGHTING CIRCUITS ON ALTERNATE CIRCUIT WHEREVER HOME RUNS ARE SHOWING TWO OR MORE CIRCUITS.
7. ALL POWER WIRING SHALL BE A MINIMUM OF 3 #12 THHN. ONE POWER, ONE NEUTRAL, ONE GROUND, RAN IN A MINIMUM OF 3/4" CONDUIT UNLESS SPECIFICALLY INDICATED ON DRAWINGS.

ELECTRICAL SYMBOLS

- CONTROL DEVICE - FURNISHED AND INSTALLED UNDER OTHER SECTIONS; RACEWAYS, CONDUCTORS, AND CONDUCTOR END TERMINATORS FURNISHED AND INSTALLED THIS SECTION AS SHOWN. CONDUCTOR FINAL CONNECTIONS PROVIDED UNDER OTHER SECTIONS.
- CONNECTION POINT TO EQUIPMENT SPECIFIED. FURNISHED AND INSTALLED UNDER OTHER SECTIONS. RACEWAY, CONDUCTOR AND CONNECTION IN THIS SECTION.
- ☼ LIGHT FIXTURE
- 1 SINGLE POLE SWITCH RATED 20 AMPS AT 120-277V IVORY COLOR HUBBLE # 1221I
- BRANCH CIRCUIT CONCEALED OR EXPOSED.
- BRANCH CIRCUIT UNDERGROUND
- LA-X HOME-RUN TO CIRCUIT BREAKER #X OF PANEL LA (2#12, 1#12G, 3/4"C. UNLESS OTHERWISE NOTED).
- 1 DUPLEX RECEPTACLE 120V, 20A, 1ϕ 18" A.F.F.
- GFI G.F.I. DUPLEX RECEPTACLE, 120V, 20A 1ϕ 18" A.F.F.
- 2 DUPLEX ISOLATED GROUND RECEPTACLE, 120V, 20A, 1ϕ FOR COMPUTER 18"A.F.F. (HUBBLE #53621)
- PZ 240/120V POWER PANEL
- J JUNCTION BOX
- ALL POWER WIRING SHOWN SHALL BE 3-#12 THHN RUN IN MIN. ¾" CONDUIT UNLESS OTHERWISE NOTED.

GEORGIA REGISTERED No. 024380 PROFESSIONAL ENGINEER CHARLES J. WINKLER
5-6-07

KHAFRA ENGINEERING CONSULTANTS, INC.
230 PEACHTREE STREET, SUITE 200
ATLANTA, GEORGIA 30303
404-525-2120 FAX 404-522 7941

DSGN	WAAN
DR	WAAN
CHK	WAAN
APVD	MCLG

NO.	DATE	REVISION	BY	APVD

REUSE OF DOCUMENTS
THIS DOCUMENT, AND THE IDEAS AND DESIGNS INCORPORATED HEREIN, AS AN INSTRUMENT OF PROFESSIONAL SERVICE, IS THE PROPERTY OF KHAFRA AND IS NOT TO BE USED, IN WHOLE OR IN PART, FOR ANY OTHER PROJECT WITHOUT THE WRITTEN AUTHORIZATION.

VERIFY SCALES
BAR IS ONE INCH ON ORIGINAL DRAWING
0 1"
IF NOT ONE INCH ON THIS SHEET, ADJUST SCALES ACCORDINGLY.

BIG CREEK BASIN
TO COBB COUNTY DIVERSION
FORCE MAIN

ELECTRICAL
ELECTRICAL LEGEND AND NOTES

SHEET	18 OF 21
DWG NO.	E-01
DATE	MAY 2007
PROJ NO.	01107-42

GRAPHIC SCALE

(IN FEET)
1 inch = 4 ft.

NOTES:

1. CONTRACTOR SHALL FIELD LOCATE EXISTING SPARE SPACE'S IN EXISTING PANEL LA. PROVIDE NEW CIRCUIT BREAKERS AS REQUIRED TO MATCH EXISTING. NEW CIRCUITS SHALL BE PROVIDED AS FOLLOWS:

   LA-19 FIT-100 (20A)
   LA-20 METER VAULT LIGHT/RECEP (20A)
   LA-21 FCV-100 (30A)

2. CONTRACTOR SHALL PROVIDE REMOTE PUSHBUTTON STATION FOR FCV-100. PB-100 SHALL INCLUDE OPEN/CLOSE MOMENTARY PUSHBUTTONS AND INDICATING PILOT LIGHTS FOR OPEN/CLOSE STATUS. PUSHBUTTON STATION ENCLOSURE, PUSHBUTTONS, AND PILOT LIGHTS SHALL BE ALLEN-BRADLEY TYPE 800T/H.

3. A DRY WELL FLOAT SWITCH SHALL BE FURNISHED TO AUTOMATICALLY DETECT A HIGH LIQUID LEVEL IN THE METER VAULT. THE SWITCH SHALL BE NORMALLY OPEN AND CLOSE ON A RISING LIQUID LEVEL. THE FLOAT SWITCH AND PIPING SHALL BE SUBMERSILE. THE JUNCTION BOX SHALL BE NEMA 4X. ALL CONSTRUCTION SHALL BE PVC, PBT AND BUNA N FOR CORROSION REISTANCE. THE DRY WELL SWITCH SHALL BE A CONTEGRA MODEL FS202-T AND BE INSTALLED IN ACCORDANCE WITH PROJECT PLANS AND MANUFACTURER'S INSTRUCTIONS.

4. CONTRACTOR SHALL PROVIDE LOCKABLE DISCONNECT SWITCH AS REQUIRED PER NEC CODE. COORDINATE MOUNTING LOCATION WITH ENGINEER/OWNER.

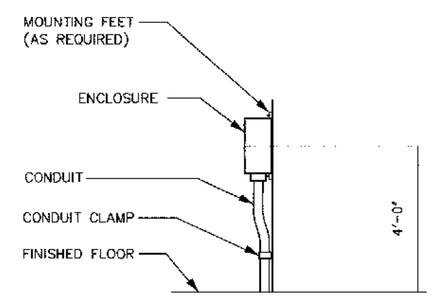

WALL MOUNTING DETAIL (A)

NTS

NOTE:

ALL MOUNTING HARDWARE SHALL BE 316 SST ON CONCRETE WALLS USE SST WEDGE ANCHORS, MOUNT ENCLOSURE ON 1/4" SPACERS OF 1/2" GRS PVC CONDUIT.

GEORGIA REGISTERED No. 024890 PROFESSIONAL ENGINEER CHARLES J. WINKLER 5-6-07

KHAFRA ENGINEERING CONSULTANTS, INC.
230 PEACHTREE STREET, SUITE 260
ATLANTA, GEORGIA 30303
404-525-2123 FAX 404-522-7941

DSGN	WAAN
DR	WAAN
CHK	WAA
APVD	MCLG

NO.	DATE	REVISION	BY	APVD

REUSE OF DOCUMENTS
THIS DOCUMENT, AND THE IDEAS AND DESIGNS INCORPORATED HEREIN, AS AN INSTRUMENT OF PROFESSIONAL SERVICE, IS THE PROPERTY OF KHAFRA AND IS NOT TO BE USED, IN WHOLE OR IN PART, FOR ANY OTHER PROJECT WITHOUT THE WRITTEN AUTHORIZATION.

VERIFY SCALES
BAR IS ONE INCH ON ORIGINAL DRAWING
0 1"
IF NOT ONE INCH ON THIS SHEET, ADJUST SCALES ACCORDINGLY.

BIG CREEK BASIN
TO COBB COUNTY DIVERSION
FORCE MAIN

ELECTRICAL

SITE PLAN

SHEET	19 OF 21
DWG NO.	E-02
DATE	MAY 2007
PROJ NO.	01107-42

GENERAL

FIELD MOUNTED INSTRUMENT OR OTHER COMPONENT

INSTRUMENT OR OTHER COMPONENT MOUNTED ON LOCAL CONTROL PANEL

SINGLE INSTRUMENT OR OTHER COMPONENT WITH MULTIPLE FUNCTIONS

FIELD MOUNTED INDICATING LIGHT, MAY BE LOCATED ON A CONTROL PANEL

PANEL MOUNTED INDICATING LIGHT

RELAY INTERLOCK LOGIC – SEE SCHEMATICS OR SPECIFICATIONS FOR DETAILS

INDICATOR/CONTROLLER/RECORDER OR ALARM NORMALLY ACCESSIBLE TO OPERATOR FROM HMI OR OI

PLC / REMOTE I/O POINT

ANALOG INPUT

DISCRETE INPUT

DATA SIGNAL INPUT *

ANALOG OUTPUT

DISCRETE OUTPUT

DATA SIGNAL OUTPUT *

* 2-WIRE NETWORK INTERFACE. SEE SPECIFICATIONS FOR DETAILS

GENERALIZED FOR COMPLEX INTERLOCK LOGIC OR SUBROUTINE PERFORMED IN SOFTWARE. SEE SPECIFICATIONS FOR DETAILS

GERERAL ABBREVIATIONS

HMI – HUMAN MACHINE INTERFACE
LCP – LOCAL CONTROL PANEL
LCS – LOCAL CONTROL STATION
MCC – MOTOR CONTROL CENTER
MCP – MAIN CONTROL PANEL
MOV – MOTOR OPERATED VALVE
MS – MOTOR STARTER
OI – OPERATOR INTERFACE
PLC – PROGRAMMABLE LOGIC CONTROLLER
RIO – REMOTE I/O
RVSS – REDUCED VOLTAGE SOLID-STATE STARTER
RTU – LOCAL CONTROL PANEL
VCP – LOCAL CONTROL PANEL
VFD – LOCAL CONTROL PANEL
VSD – LOCAL CONTROL PANEL

CONTROL FUNCTION DESIGNATIONS

AHC – AUTO/HOLD/CLOSE
AM – AUTO/MANUAL
AS – AIR SUPPLY
C/V – CONSTANT/VERIABLE SPEED
DEV – DEVIATION
H/M/L – HIGH/MID/LOW
HOA – HAND/OFF/AUTO
HOR – HAND/OFF/REMOTE
LOR – LOCAL/OFF/REMOTE
LOS – LOCKOUT STOP
L/R – LOCAL/REMOTE
MOA – MANUAL/OFF/AUTO
OC – OPEN/CLOSE
OCA – OPEN/CLOSE/AUTO
OLH – OFF/LOW/HIGH
OO – ON/OFF
OSC – OPEN/STOP/CLOSED
PID – PROPORTIONAL/INTEGRAL/DERIVATIVE CONTROLLER
POT – POTENTIOMETER
RL – RAISE/LOWER
RSL – RAISE/STOP/LOWER
SD – SHUTDOWN
SEL – SELECT
SP – SET POINT
SR – START/RESET
S/R – STOP/RESET
S/S – START/STOP
ST – START

FY *

INSTRUMENT PANEL MOUNTED WITH COMPUTING OR CONVERTING FUNCTION

CONVERT %

E – VOLTAGE
I – CURRENT
P – PNEUMATIC
A – ANALOG
B – BINARY
H – HYDRAULIC
O – ELECTROMAGNETIC, SONIC
R – RESISTANCE (ELECT.)
D – DIGITAL

COMPUTE *

SUMMING *
SUBTRACTOR –
MULTIPLYING X
DIVIDING ÷
ROOT EXTRACTION √
PROPORTIONAL P
DERIVATIVE R
AVERAGING Σ/n
RATIO 1:1
DIFFERENCE Δ
HIGH SELECTING >
LOW SELECTING <
INTEGRAL ∫
CONTROL RELAY CR

LSA LIGHTING SURGE ARRESTOR

IDENTIFICATION LETTERS

	FIRST-LETTER: MEASURED OR INITIATING VARIABLE	FIRST-LETTER: MODIFIER	SUCCEEDING-LETTERS: READOUT OR PASSIVE FUNCTION	SUCCEEDING-LETTERS: OUTPUT FUNCTION	SUCCEEDING-LETTERS: MODIFIER
A	ANALYSIS		ALARM		
B	BURNER, COMBUSTION				
C	CONDUCTIVITY			CONTROL	CLOSED
D	DENSITY	DIFFERENTIAL			
E	VOLTAGE		SENSOR (PRIMARY ELEMENT)		
F	FLOW RATE	RATIO (FRACTION)			
G	GAGE		GLASS, VIEWING DEVICE		
H	HAND				HIGH
I	CURRENT (ELECTRICAL)				
J	POWER	SCAN	INDICATE		
K	TIME, TIME SCHEDULE	TIME RATE OF CHANGE		CONTROL STATION	
L	LEVEL		LIGHT		
M	MOTOR	MOMENTARY			MIDDLE, INTERMEDIATE
N	TORQUE		ISOLATE	ISOLATOR	
O			ORIFICE, RESTRICTION		OPEN
P	PRESSURE, VACUUM		POINT (TEST) CONNECTION		
Q	QUANTITY	INTEGRATE, TOTALIZE			
R	RADIATION		RECORD		
S	SPEED, FREQUENCY	SAFETY		SWITCH	
T	TEMPERATURE			TRANSMIT	
U	MULTIVARIABLE		MULTIFUNCTION	MULTIFUNCTION	MULTIFUNCTION
V	VIBRATION, MECHANICAL ANALYSIS			VALVE, DAMPER, LOUVER	
W	WEIGHT, FORCE		WELL		
X	INTRUSION	X AXIS			
Y	EVENT, STATE OR PRESENCE	Y AXIS		COMPUTE, CONVERT	
Z	POSITION, DIMENSION	Z AXIS		DRIVER, ACTUATOR, FINAL CONTROL ELEMENT	

TAG NUMBERS

TYPICAL FORMAT
TIC-1 – INSTRUMENT IDENTIFICATION OR TAG NUMBER
TIC – FUNCTIONAL IDENTIFICATION
T – FIRST-LETTER
IC – SUCCEEDING-LETTER(S)
1 – LOOP NUMBER

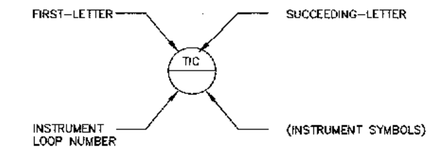

EXPANDED: FORMAT
10-PAH-1A – TAG NUMBER
A – OPTIONAL SUFFIX

RUN INDICATION SHALL BE RED
OFF INDICATION SHALL BE GREEN

PROJECT LINE SYMBOLOGY

UNLESS NOTED OTHERWISE, THE FOLLOWING SYMBOLOGY APPLIES TO ALL DRAWINGS.

PNEUMATIC CONTROL
ELECTRICAL INSTRUMENT LINE
DATA LINK LINE
PROCESS LINE
SCREENED LINE WORK INDICATES EXISTING
DASH LINE WORK INDICATES FUTURE EQUIPMENT
VENDOR EQUIPMENT SKID LIMITS

GENERAL NOTES

1. ADDITIONAL INSTRUMENTATION AND CONTROL SYMBOLS MAY USED AS REQUIRED. SYMBOLS AND NOMENCLATURE ARE BASED ON ISA STANDARD S 5.1
2. SEE ELECTRICAL SHEETS FOR ADDITIONAL SYMBOLS AND ABBREVIATIONS.
3. REFER TO SPECIFICATION SECTION 17100 FOR COMPETE DETAILS OF LOOP DRAWING SUBMITTAL REQUIREMENTS.
4. POWER SUPPLIES FOR INSTRUMENT LOOPS OR SYSTEMS SHALL BE FURNISHED BY THE INSTRUMENTATION SUPPLIER TO MEET THE VOLTAGE AND CURRENT REQUIREMENTS OF THE COMPONENTS IN EACH LOOP OR SYSTEM.

GEORGIA REGISTERED No. 024590 PROFESSIONAL ENGINEER CHARLES J. WINKLER 5-6-07

KHAFRA ENGINEERING CONSULTANTS, INC.
230 PEACHTREE STREET, SUITE 200
ATLANTA, GEORGIA 30303
404-525-2120 FAX 404-522-7941

DSGN	WEJS
DR	DMML
CHK	WEJS
APVD	MCLG

NO.	DATE	REVISION	BY	APVD

REUSE OF DOCUMENTS
THIS DOCUMENT, AND THE IDEAS AND DESIGNS INCORPORATED HEREIN, AS AN INSTRUMENT OF PROFESSIONAL SERVICE, IS THE PROPERTY OF KHAFRA AND IS NOT TO BE USED, IN WHOLE OR IN PART, FOR ANY OTHER PROJECT WITHOUT THE WRITTEN AUTHORIZATION.

VERIFY SCALES
BAR IS ONE INCH ON ORIGINAL DRAWING
0 1"
IF NOT ONE INCH ON THIS SHEET, ADJUST SCALES ACCORDINGLY.

BIG CREEK BASIN
TO COBB COUNTY DIVERSION
FORCE MAIN

ELECTRICAL
METER VAULT PROCESS AND INSTRUMENTATION DIAGRAM SYMBOLS AND NOMENCLATURE

SHEET	20 OF 21
DWG NO.	I-01
DATE	MAY 2007
PROJ NO.	01107-42

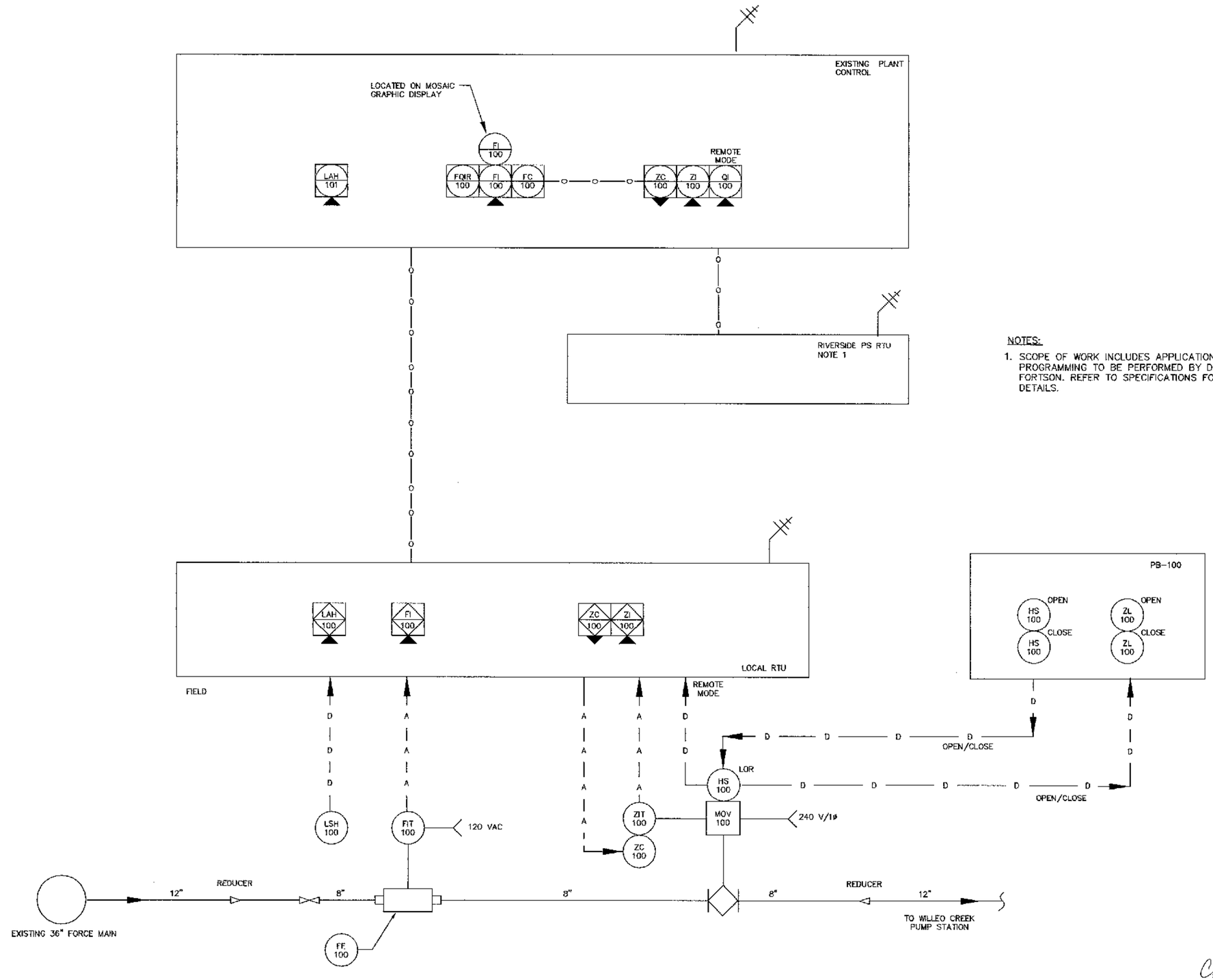

NOTES:

1. SCOPE OF WORK INCLUDES APPLICATIONS PROGRAMMING TO BE PERFORMED BY DEXTER FORTSON. REFER TO SPECIFICATIONS FOR DETAILS.

GEORGIA REGISTERED PROFESSIONAL ENGINEER CHARLES J. WINKLER
5-6-07

KHAFRA ENGINEERING CONSULTANTS, INC.
230 PEACHTREE STREET, SUITE 200
ATLANTA, GEORGIA 30303
404-522-2120 FAX 404-522-7911

DSGN	WAAN
DR	WAAN
CHK	WAAN
APVD	MCLG

NO.	DATE	REVISION	BY	APVD

REUSE OF DOCUMENTS

THIS DOCUMENT, AND THE IDEAS AND DESIGNS INCORPORATED HEREIN, AS AN INSTRUMENT OF PROFESSIONAL SERVICE, IS THE PROPERTY OF KHAFRA AND IS NOT TO BE USED, IN WHOLE OR IN PART, FOR ANY OTHER PROJECT WITHOUT THE WRITTEN AUTHORIZATION.

VERIFY SCALES
BAR IS ONE INCH ON ORIGINAL DRAWING
0 1"
IF NOT ONE INCH ON THIS SHEET, ADJUST SCALES ACCORDINGLY.

BUILD NORTH

BIG CREEK BASIN
TO COBB COUNTY DIVERSION
FORCE MAIN

ELECTRICAL
METER VAULT INSTRUMENTATION AND CONTROL

SHEET	21 OF 21
DWG NO.	I-02
DATE	MAY 2007
PROJ NO.	01107-42