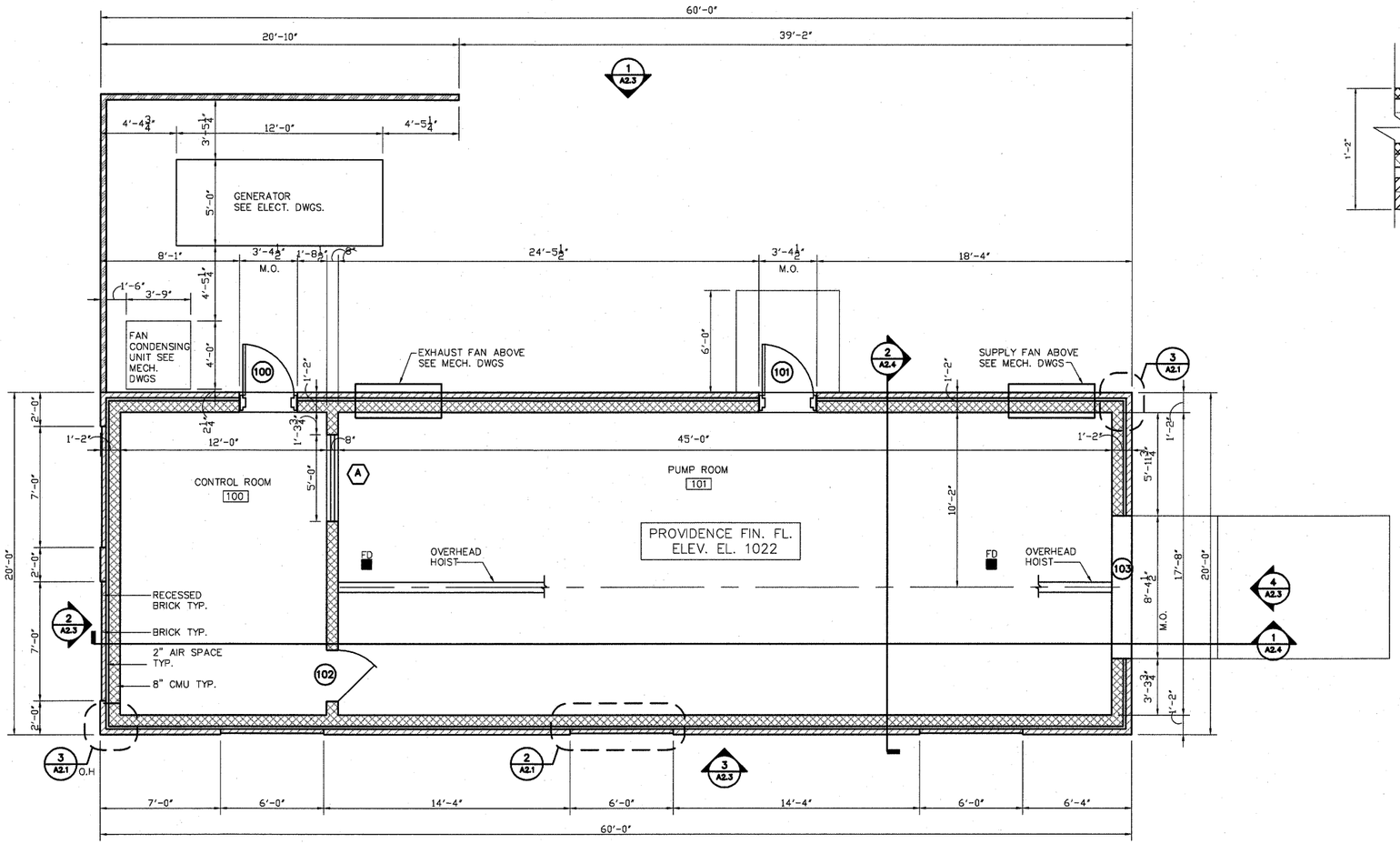

1 A2.1 FLOOR PLAN
SCALE: 1/4" = 1'-0"

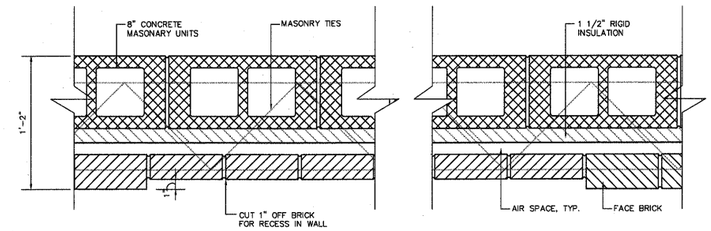

2 A2.1 RECESS DETAIL
SCALE: 1-1/2" = 1'-0"

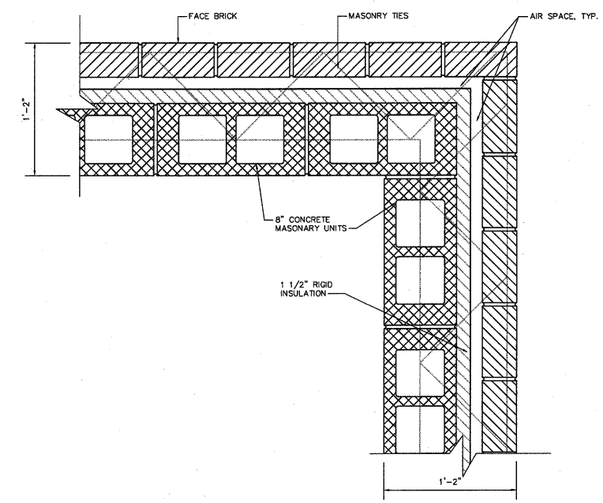

3 A2.1 CORNER DETAIL
SCALE: 1-1/2" = 1'-0"

J. W. ROBINSON & ASSOCIATES
• ARCHITECTS • INTERIOR DESIGNERS • URBAN PLANNERS
1020 RALPH DAVID ABERNATHY BLVD., S.W., ATLANTA, GEORGIA 30310
PHONE: (404) 753-4129 FAX: (404) 753-4435

NO.	DATE	DESCRIPTION OF REVISION
0	11-15-07	INITIAL ISSUE

ful028AB01.DWG 11.26.07

JORDAN JONES & GOULDING

BOARD OF COMMISSIONERS
FULTON COUNTY, GEORGIA

STATE OF GEORGIA
JEFFREY LEONARDO ROBINSON
CERTIFICATE NO. 8215
REGISTERED ARCHITECT

W027 NORTH FULTON WATER SYSTEM IMPROVEMENTS

PROVIDENCE ROAD BOOSTER PUMP STATION
FLOOR PLAN

DESIGNED:	CHECKED:	DATE: NOVEMBER 2007	A2.1	0
DRAWN:	JOB NO. 02016028	SCALE: AS NOTED	SHEET	REV

THIS LINE IS ONE INCH LONG WHEN PLOTTED FULL SCALE

CGLOSTER

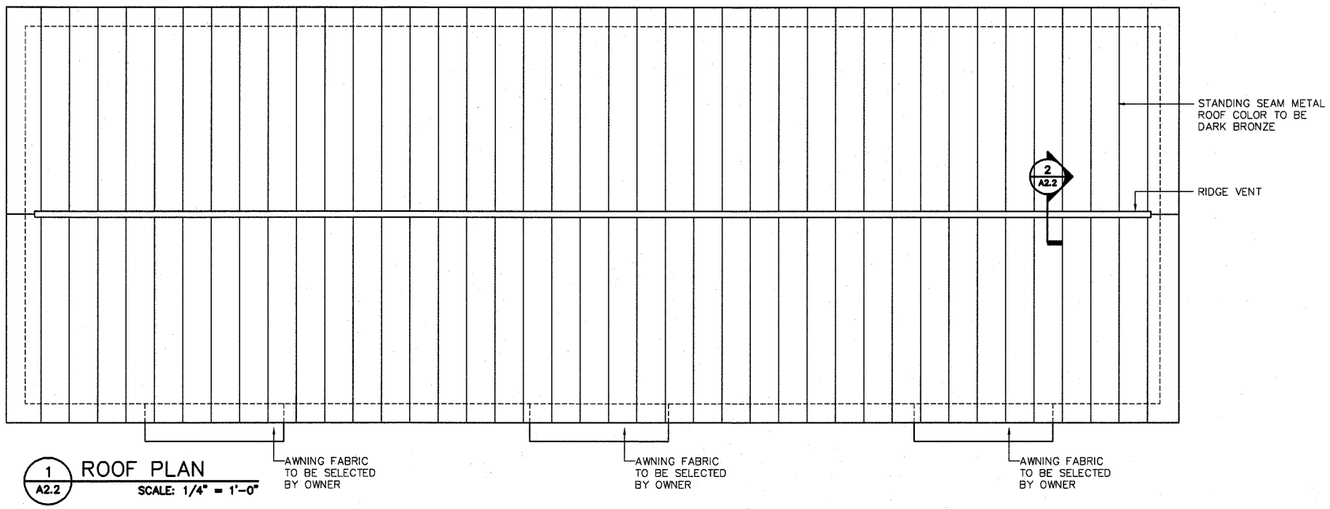

1 A2.2 ROOF PLAN
SCALE: 1/4" = 1'-0"

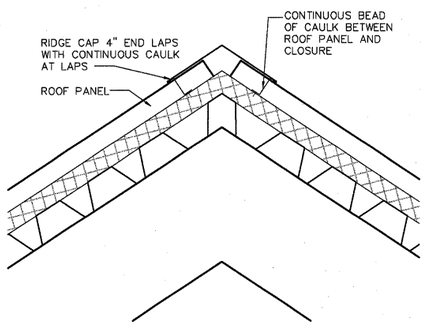

2 A2.2 RIDGE DETAIL
SCALE: 3" = 1'-0"

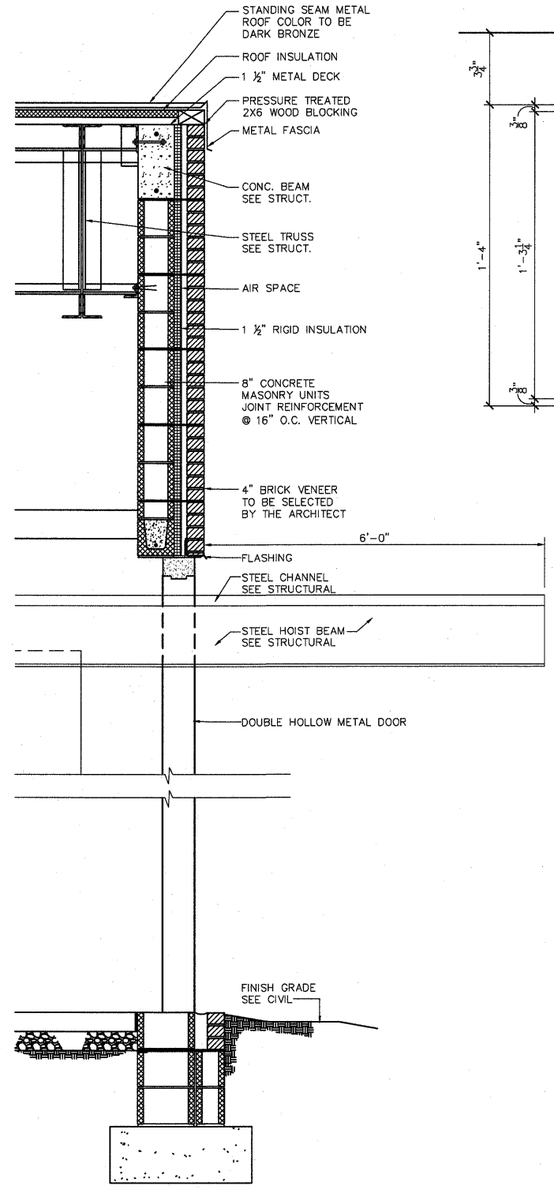

3 A2.2 WALL SECTION
SCALE: 3/4" = 1'-0"

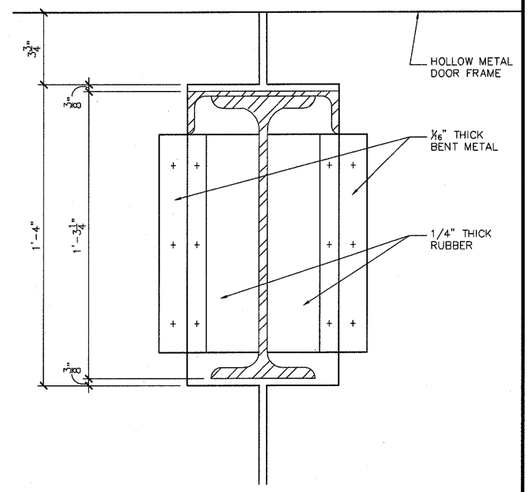

4 A2.2 DOOR HOIST BEAM
SCALE: 1-1/2" = 1'-0"

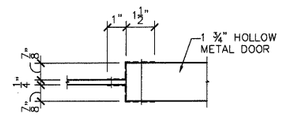

5 A2.2 DOOR RUBBER CLOSURE HOIST BEAM
SCALE: 1-1/2" = 1'-0"

J. W. ROBINSON & ASSOCIATES
• ARCHITECTS • INTERIOR DESIGNERS • URBAN PLANNERS
1020 RALPH DAVID ABERNATHY BLVD., S.W., ATLANTA, GEORGIA 30310
PHONE: (404) 753-4129 FAX: (404) 753-4435

NO.	DATE	DESCRIPTION OF REVISION
0	11-15-07	INITIAL ISSUE

ful028AB02.DWG 11.26.07

JORDAN JONES & GOULDING

BOARD OF COMMISSIONERS
FULTON COUNTY, GEORGIA

STATE OF GEORGIA
JEFFREY EDWARDO ROBINSON
CERTIFICATE NO. 8213
REGISTERED ARCHITECT

W027 NORTH FULTON WATER SYSTEM IMPROVEMENTS

PROVIDENCE ROAD BOOSTER PUMP STATION
ROOF PLAN

DESIGNED:	CHECKED:	DATE: NOVEMBER 2007	A2.2	0
DRAWN:	JOB NO. 02016028	SCALE: AS NOTED	SHEET	REV

THIS LINE IS ONE INCH LONG WHEN PLOTTED FULL SCALE

CGLOSTER

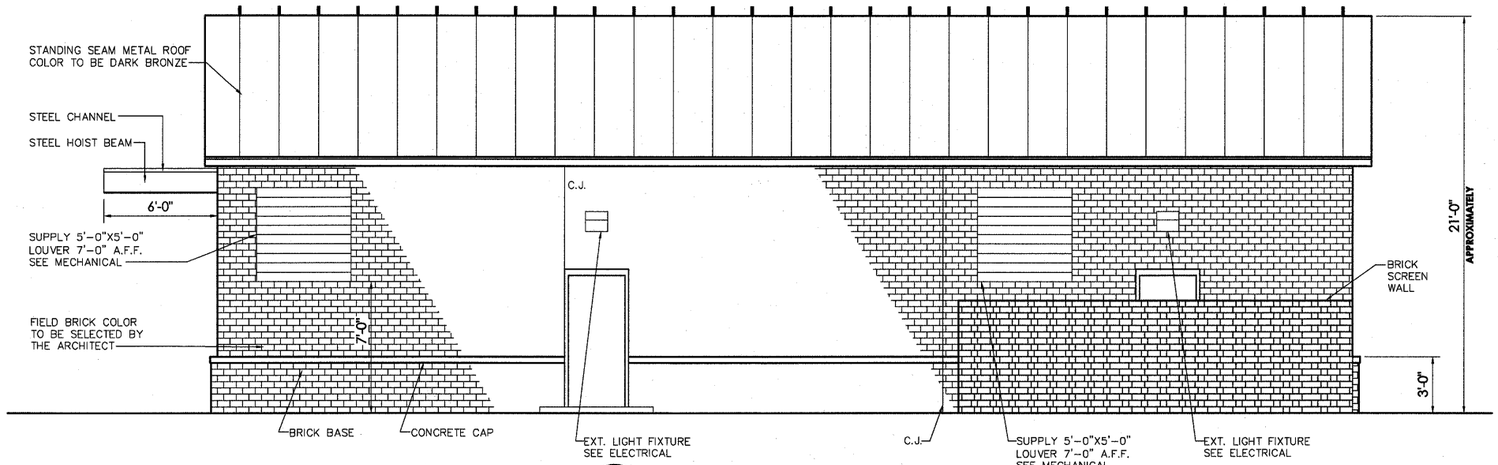

1 A2.3 SOUTH ELEVATION
SCALE: 1/4" = 1'-0"

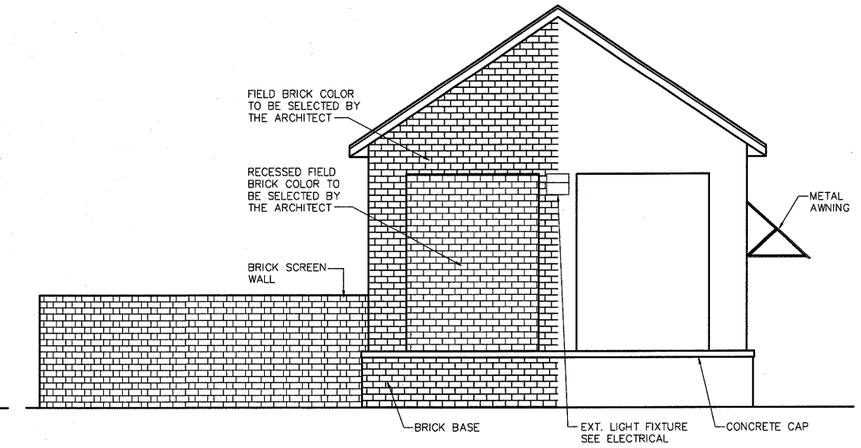

2 A2.3 EAST ELEVATION
SCALE: 1/4" = 1'-0"

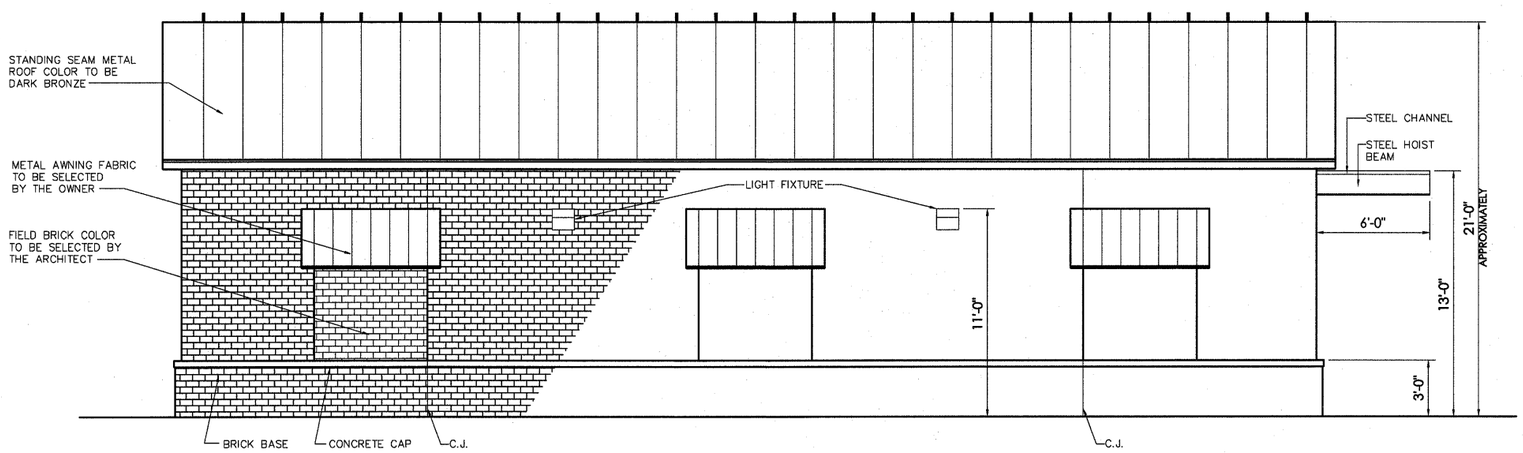

3 A2.3 NORTH ELEVATION
SCALE: 1/4" = 1'-0"

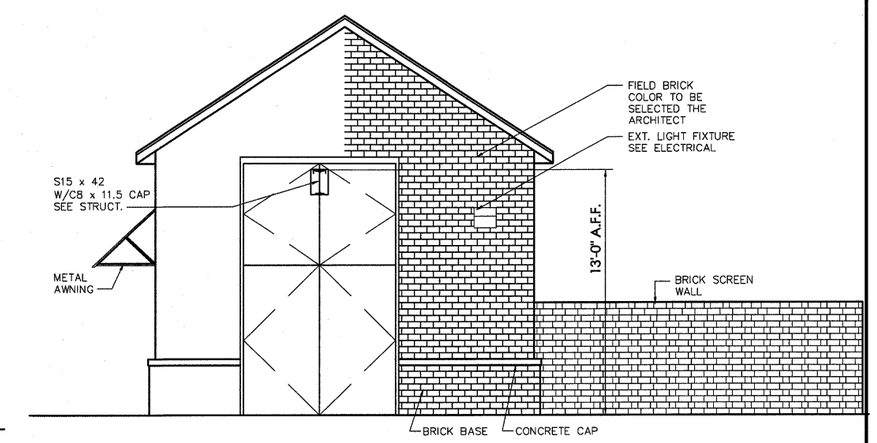

4 A2.3 WEST ELEVATION
SCALE: 1/4" = 1'-0"

J. W. ROBINSON & ASSOCIATES
• ARCHITECTS • INTERIOR DESIGNERS • URBAN PLANNERS
1020 RALPH DAVID ABERNATHY BLVD., S.W., ATLANTA, GEORGIA 30310
PHONE: (404) 753-4129 FAX: (404) 753-4435

NO.	DATE	DESCRIPTION OF REVISION
0	11-15-07	INITIAL ISSUE

ful028AB03.DWG 11.26.07

JORDAN JONES & GOULDING

BOARD OF COMMISSIONERS
FULTON COUNTY, GEORGIA

STATE OF GEORGIA
JEFFREY ROLANDO CANNON
CERTIFICATE NO. 8215
REGISTERED ARCHITECT

W027 NORTH FULTON WATER SYSTEM IMPROVEMENTS

PROVIDENCE ROAD BOOSTER PUMP STATION
ELEVATIONS

DESIGNED:	CHECKED:	DATE: NOVEMBER 2007	A2.3	0
DRAWN:	JOB NO. 02016028	SCALE: AS NOTED	SHEET	REV

THIS LINE IS ONE INCH LONG WHEN PLOTTED FULL SCALE

CGLOSTER

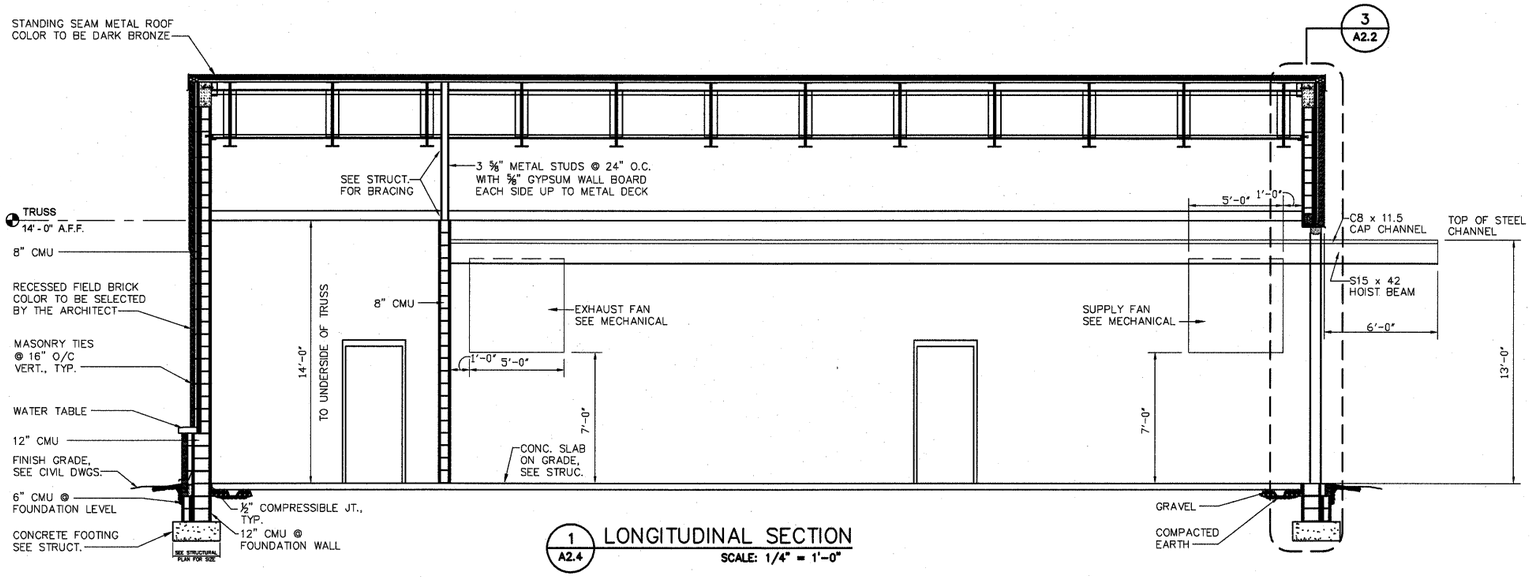

1 A2.4 LONGITUDINAL SECTION
SCALE: 1/4" = 1'-0"

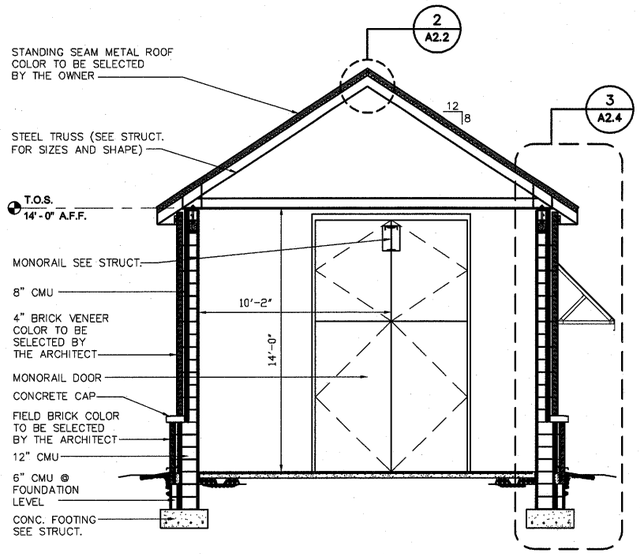

2 A2.4 TRANSVERSE SECTION
SCALE: 1/4" = 1'-0"

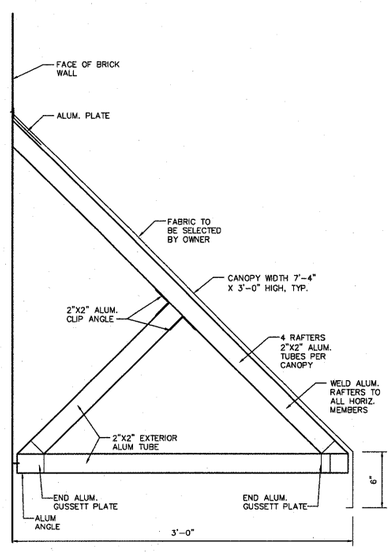

4 A2.4 CANOPY DETAIL
SCALE: 1-1/2" = 1'-0"

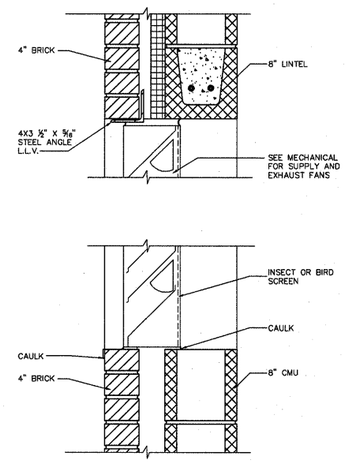

5 A2.4 SECTION THRU LOUVERS
SCALE: 1-1/2" = 1'-0"

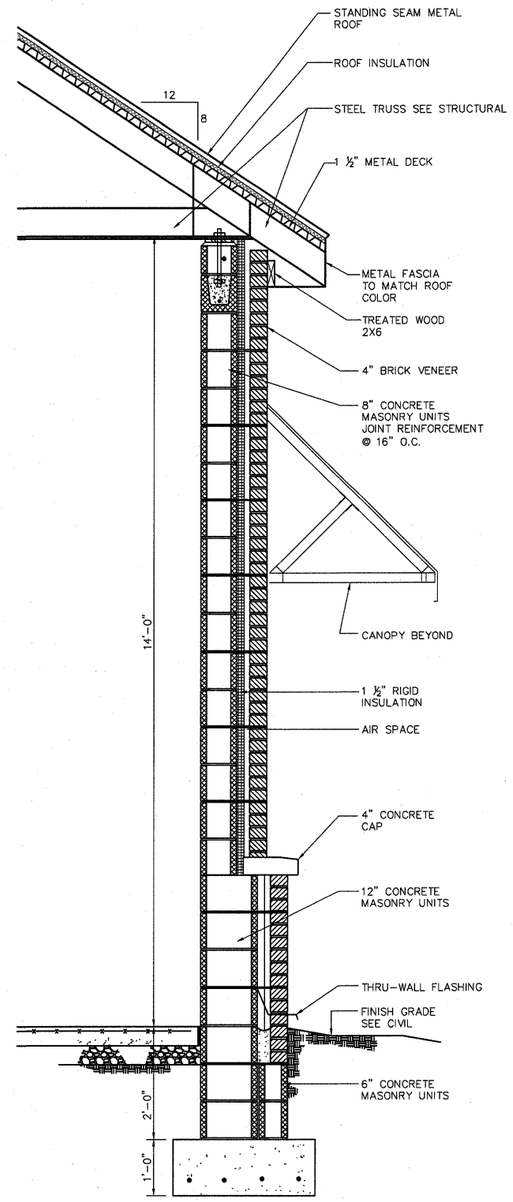

3 A2.4 WALL SECTION
SCALE: 3/4" = 1'-0"

J. W. ROBINSON & ASSOCIATES
• ARCHITECTS • INTERIOR DESIGNERS • URBAN PLANNERS
1020 RALPH DAVID ABERNATHY BLVD., S.W., ATLANTA, GEORGIA 30310
PHONE: (404) 753-4129 FAX: (404) 753-4435

		0	11-15-07	INITIAL ISSUE
ful028AB04.DWG	11.26.07	NO.	DATE	DESCRIPTION OF REVISION

JORDAN JONES & GOULDING

BOARD OF COMMISSIONERS
FULTON COUNTY, GEORGIA

STATE OF GEORGIA
JEFFREY LESTER ROBINSON
CERTIFICATE NO. 19315
REGISTERED ARCHITECT

W027 NORTH FULTON WATER SYSTEM IMPROVEMENTS

PROVIDENCE ROAD BOOSTER PUMP STATION
SECTIONS

DESIGNED:	CHECKED:	DATE: NOVEMBER 2007	A2.4	0
DRAWN:	JOB NO. 02016028	SCALE: AS NOTED	SHEET	REV

THIS LINE ____ IS ONE INCH LONG WHEN PLOTTED FULL SCALE

CGLOSTER

ROOM FINISH SCHEDULE

ROOM NO.	ROOM NAME	FLOOR		BASE		N. WALL		E. WALL		S. WALL		W. WALL		CLG.		REMARKS	ROOM NO.
		MAT.	FIN.	MAT.	FIN.	MAT.	FIN.	MAT.	FIN.	MAT.	FIN.	MAT.	FIN.	MAT.	HT.		
100	CONTROL ROOM	CONC.	–	–	–	CMU	SGL	CMU	SGL	CMU	SGL	CMU	SGL	–	–	EXPOSED STRUCTURE	100
101	PUMP ROOM	CONC.	–	–	–	CMU	SGL	CMU	SGL	CMU	SGL	CMU	SGL	–	–	EXPOSED STRUCTURE	101

LEGEND

CONC	CONCRETE	WD	WOOD	BRK	BRICK	VCT	VINYL COMPOSITION TILE
SGL	SEMI-GLOSS LATEXS	PNT	PAINTED	EXBRK	EXPOSED BRICK	T.BD	TECTUM BOARD
GWB	GYPSUM WALL BOARD	RB	RUBBER BASE	CMU	CONCRETE MASONRY UNIT		
ACT	ACOUSTICAL CEILING TILE	STN	STAINED	QT	QUARRY TILE		

DOOR SCHEDULE

DOOR NO.	DOOR TYPE	DIMENSIONS			DOOR		FRAME			DOOR DETAILS			RATING/ LABEL	HDWE	SIGNAGE COPY	REMARKS	NO.
		WIDTH	HEIGHT	THICK.	MAT.	FIN.	TYPE	MAT.	FIN.	HEAD	JAMB	SILL					
100	A	3'-0"	7'-0"	1 3/4"	HM	PT	F-1	HM	PT	1/A2.5	2/A2.5	3/A2.5	–	–	–	–	100
101	A	3'-0"	7'-0"	1 3/4"	HM	PT	F-1	HM	PT	1/A2.5	2/A2.5	3/A2.5	–	–	–	–	101
102	A	3'-0"	7'-0"	1 3/4"	HM	PT	F-1	HM	PT	4/A2.5	5/A2.5	6/A2.5	–	–	–	–	102
103A	B	PR 4'-0"	8'-0"	1 3/4"	HM	PT	F-2	HM	PT	7/A2.5	8A/A2.5 & 8B/A2.5	9/A2.5	–	–	–	LOWER DOORS	103A
103B	B	PR 4'-0"	5'-4"	1 3/4"	HM	PT	F-2	HM	PT	7/A2.5	8B/A2.5	–	–	–	–	UPPER DOORS	103B

LEGEND

PR	PAIR	ENT	ENTRANCE	GI	1/2 GLASS	FG	FIBERGLASS
		STN	STAIN	TPL	1/4" TEMPERED PLATE GLASS	WD/GL	WOOD/GLASS
		SC	SOLID CORE WOOD	HDWE	HARDWARE	WD	WOOD
HM	HOLLOW METAL	PNT	PAINT	FF	FACTORY FINISH		

WINDOW SCHEDULE

WIND. NO.	WIND TYPE	DIMENSIONS			WINDOW FRAME		WINDOW GLAZING		WINDOW DETAILS			REMARKS	NO.
		WIDTH	HEIGHT	THICK.	MAT.	FIN.	TYPE	THICK.	HEAD	JAMB	SILL		
A	–	5'-0"	2'-8"	6 3/4"	HM	FF.	TEMPERED	1/4"	11/A2.5	11/A2.5		–	A

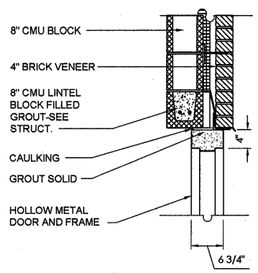

1 A2.5 DOOR HEAD DETAIL
3/4" = 1' – 0"

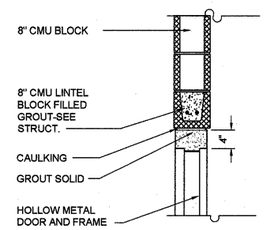

4 A2.5 DOOR HEAD DETAIL
3/4" = 1' – 0"

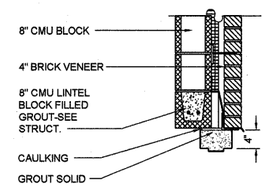

7 A2.5 DOOR HEAD DETAIL
3/4" = 1' – 0"

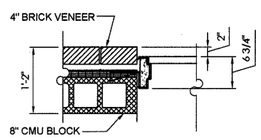

2 A2.5 DOOR JAMB DETAIL
3/4" = 1' – 0"

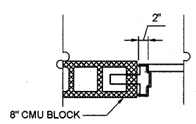

5 A2.5 DOOR JAMB DETAIL
3/4" = 1' – 0"

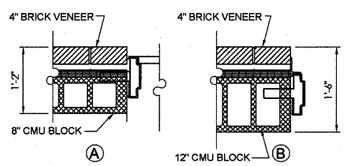

8 A2.5 DOOR JAMB DETAIL
3/4" = 1' – 0"

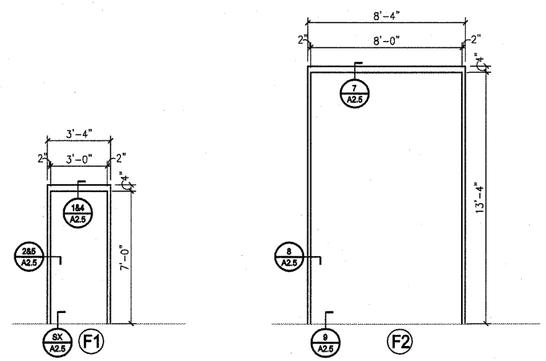

DOOR FRAME TYPES
SCALE: 3/8" = 1'-0"

NOTE:
DOORS AND FRAMES SHALL BE PAINTED DARK BRONZE TO MATCH THE ROOF.

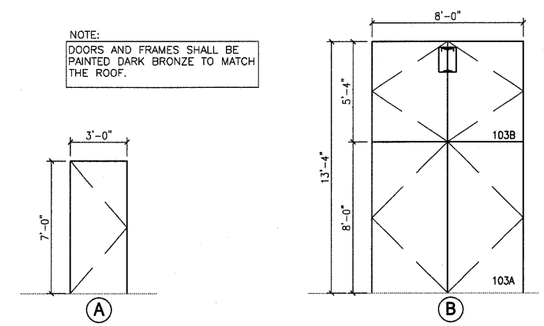

DOOR TYPES
SCALE: 3/8" = 1'-0"

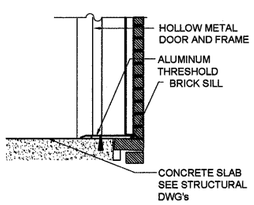

3 A2.5 SILL DETAIL
3/4" = 1' – 0"

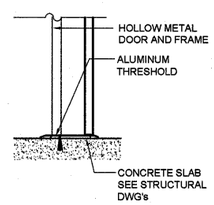

6 A2.5 SILL DETAIL
3/4" = 1' – 0"

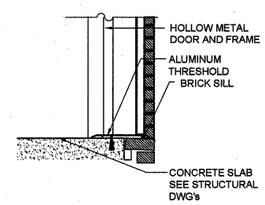

9 A2.5 SILL DETAIL
3/4" = 1' – 0"

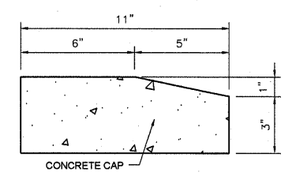

10 A2.5 CONCRETE CAP
SCALE: 3" = 1'-0"

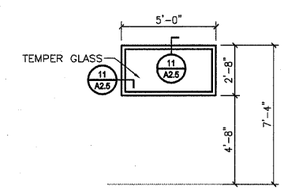

WINDOW TYPE
SCALE: 3/8" = 1'-0"

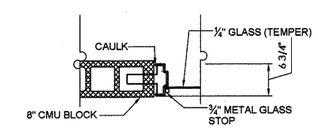

11 A2.5 HEAD/JAMB WINDOW DETAIL
3/4" = 1' – 0"

J. W. ROBINSON & ASSOCIATES
• ARCHITECTS • INTERIOR DESIGNERS • URBAN PLANNERS
1020 RALPH DAVID ABERNATHY BLVD., S.W., ATLANTA, GEORGIA 30310
PHONE: (404) 753-4129 FAX: (404) 753-4435

NO.	DATE	DESCRIPTION OF REVISION
0	11-15-07	INITIAL ISSUE

ful028AB05.DWG 11.26.07

JORDAN JONES & GOULDING

BOARD OF COMMISSIONERS
FULTON COUNTY, GEORGIA

STATE OF GEORGIA
JEFFREY RICHARD ROBINSON
CERTIFICATE NO. 8215
REGISTERED ARCHITECT

W027 NORTH FULTON WATER SYSTEM IMPROVEMENTS

PROVIDENCE ROAD BOOSTER PUMP STATION
SCHEDULES

DESIGNED:	CHECKED:	DATE: NOVEMBER 2007	A2.5	0
DRAWN:	JOB NO. 02016028	SCALE: AS NOTED	SHEET	REV

THIS LINE ____ IS ONE INCH LONG WHEN PLOTTED FULL SCALE

CGLOSTER

AIR MOVING DEVICES & COMPONENTS

- AXIAL FLOW FAN
- CENTRIFUGAL FAN
- CENTRIFUGAL WALL FAN
- PROPELLER WALL FAN
- ROOF SUPPLY FAN
- ROOF EXHAUST FAN
- UNIT HEATER (ELECTRIC, GAS)
- DUCT WITH FLOW ARROW
- 20 x 14 — DUCT WITH SIZE
- SUPPLY DUCT OR POSITIVE PRESSURE RISER
- RETURN DUCT OR NEGATIVE PRESSURE RISER
- R — ELEVATION CHANGE, (R) RISE OR (D) DROP
- ACCESS DOOR (VERTICAL, HORIZONTAL)
- ACOUSTICAL LINING (INSULATION)
- 14 X 12 — DUCT SIZE (RECTANGULAR)
- 8"ø — DUCT SIZE (ROUND)
- COWL, (GOOSENECK) & FLASHING
- FLEXIBLE CONNECTION
- FLEXIBLE DUCT
- TRANSITION
- ELBOW WITH TURNING VANES
- BACK DRAFT DAMPER
- M — MOTORIZED DAMPER
- FIRE DAMPER & SLEEVE
- MANUAL VOLUME DAMPER
- SD — SMOKE DAMPER
- T — THERMOSTAT
- S — SWITCH
- H — HUMIDISTAT
- CONICAL DUCT TAP
- STANDARD BRANCH, NO SPLITTER
- ELECTRIC DUCT HEATER
- SPIN-IN FITTING WITH DAMPER
- EXHAUST GRILLE OR REGISTER (WALL)
- RETURN GRILLE OR REGISTER (CEILING)
- SUPPLY GRILLE OR REGISTER (WALL)
- SUPPLY GRILLE OR REGISTER (CEILING)
- SUPPLY DIFFUSER (RECTANGULAR, ROUND, SQUARE, LINEAR)
- TG — TRANSFER GRILLE ASSEMBLY
- UC 1/2" — UNDERCUT DOOR
- DG 24X12 — DOOR GRILLE
- FIXED WALL LOUVER
- COMBINATION WALL LOUVER
- ACOUSTIC WALL LOUVER
- EQUIPMENT SYMBOL
- FRP AIR VALVE – HANDWHEEL OPERATOR
- FRP AIR VALVE – CHAIN DRIVEN OPERATOR
- FRP AIR VALVE – MOTOR DRIVEN OPERATOR
- FLOW SWITCH
- EXISTING DUCTWORK TO BE DEMOLISHED
- EXISTING DUCTWORK TO REMAIN
- SD — SMOKE DETECTOR

MECHANICAL ABBREVIATIONS

°F	DEGREES FAHRENHEIT
Δ P	PRESSURE DIFFERENCE
ø	PHASE
ø	ROUND OR DIAMETER
AC	AIR CONDITIONING
AD	AREA DRAIN
AF	AIRFOIL
AFF	ABOVE FINISHED FLOOR
AFG	ABOVE FINISHED GRADE
AHU	AIR HANDLING UNIT
AL	ALUMINUM
AUX	AUXILIARY
A/C	ABOVE CEILING
BDD	BACK DRAFT DAMPER
BFF	BELOW FINISHED FLOOR
BOD	BOTTOM OF DUCT
BOF	BOTTOM OF FAN
BOH	BOTTOM OF HEATER
BOL	BOTTOM OF LOUVER
BOS	BOTTOM OF STEEL
BOU	BOTTOM OF UNIT
BSH	BATHTUB/SHOWER
BSP	BLACK STEEL PIPE
BTU	BRITISH THERMAL UNITS
BTUH	BRITISH THERMAL UNITS PER HOUR
B/F	BELOW FLOOR
B/G	BELOW GRADE
CAP	CAPACITY
CCF	100 CUBIC FEET
CF	CUBIC FEET
CFH	CUBIC FEET PER HOUR
CFM	CUBIC FEET PER MINUTE
CGD	COMBUSTIBLE GAS DETECTOR
CH	CABINET HEATER
CISP	CAST IRON SOIL PIPE
CO	CLEANOUT
CONC	CONCRETE
COP	COEFFICIENT OF PERFORMANCE
CPVC	CHLORINATED POLYVINYL CHLORIDE
CS	CARBON STEEL (SEAMLESS)
CU	CONDENSING UNIT OR COPPER
D	DAMPER
DB	DRY BULB
DEG	DEGREES
DF	DRINKING FOUNTAIN
DG	DOOR GRILLE
DIP	DUCTILE IRON PIPE
DN	DOWN
DWG	DRAWING
EA	EXHAUST AIR
EAT	ENTERING AIR TEMPERATURE
ECH	ELECTRIC CABINET HEATER
EDB	ENTERING DRY BULB
EER	ENERGY EFFICIENCY RATIO
EEW	EMERGENCY EYEWASH
EF	EXHAUST FAN
EFF	EFFICIENCY
EL	ELEVATION
ELEC	ELECTRICAL
ESH	EMERGENCY EYEWASH/SHOWER
ESP	EXTERNAL STATIC PRESSURE
EUH	ELECTRIC UNIT HEATER
EWB	ENTERING WET BULB
EWC	ELECTRIC WATER COOLER
EWH	ELECTRIC WATER HEATER
EWT	ENTERING WATER TEMPERATURE
EXIST	EXISTING
FCU	FAN COIL UNIT
FC	FLEXIBLE CONNECTION
FD	FIRE DAMPER
FF EL	FINISH FLOOR ELEVATION
FHV	FIRE HOSE VALVE
FLEX	FLEXIBLE
FPM	FEET PER MINUTE
FRP	FIBERGLASS REINFORCED PLASTIC
F/S	FAST/SLOW
FT	FEET
FTP	FUSION TYPE PIPE
FWE	FURNISHED WITH EQUIPMENT
GAL	GALLON
GH	GRAVITY HOOD
GPH	GALLONS PER HOUR
GPM	GALLONS PER MINUTE
GSP	GALVANIZED STEEL PIPE
GUH	GAS-FIRED UNIT HEATER
HOA	HAND/OFF/AUTO
HP	HEAT PUMP OR HORSEPOWER
HR	HOUR/HOSE REEL
HT	HEAT TRACE
HTP	HEAT TRACE PANEL
HVAC	HEATING, VENTILATING, & AIR CONDITIONING
HX	HEAT EXCHANGER
HZ	HERTZ
IE	INVERT ELEVATION
IHT	INSULATE & HEAT TRACE
IMSB	ICEMAKER SUPPLY BOX
IN	INCHES
IRH	INFRA-RED HEATER (GAS OR ELECTRIC)
KW	KILOWATT
LAT	LEAVING AIR TEMPERATURE
LAV	LAVATORY
LDB	LEAVING DRY BULB
LH	LATENT HEAT
LWB	LEAVING WET BULB
LWT	LEAVING WATER TEMPERATURE
MAU	MAKE-UP AIR UNIT
MAX	MAXIMUM
MBH	1000 BTUH
MCF	1000 CUBIC FEET
MD	MOTORIZED DAMPER
MIN	MINIMUM OR MINUTE
MVD	MANUAL VOLUME DAMPER
NC	NOISE CRITERIA
NC	NORMALLY CLOSED
NO	NORMALLY OPEN
NTS	NOT TO SCALE
OA	OUTSIDE AIR
OBD	OPPOSED BLADE DAMPER
OBVD	OPPOSED BLADE VOLUME DAMPER
OC	ON CENTER
OCP	OVER CURRENT PROTECTION
OCS	ODOR CONTROL SYSTEM
OL	OVERLOAD
OWS	OIL/WATER SEPARATOR
P	PUMP
PH	PHASE
PP	POLYPROPYLENE
PSI	POUNDS PER SQUARE INCH
PSIA	POUNDS PER SQUARE INCH ABSOLUTE
PSIG	POUNDS PER SQUARE INCH GAUGE
PVC	POLYVINYL CHLORIDE
PW	POTABLE WATER
RA	RETURN AIR OR RELIEF AIR
RAG	RETURN AIR GRILLE
REF	REFERENCE
RL	REFRIGERANT LIQUID
RPM	REVOLUTIONS PER MINUTE
RPZ	REDUCED PRESSURE ZONE
RS	REFRIGERANT SUCTION
RTU	ROOF TOP UNIT
RW	RAIN WATER CONDUCTOR
SA	SUPPLY AIR
SEN	SENSIBLE HEAT
SD	STORM DRAIN
SF	SQUARE FEET
SF	SUPPLY FAN
SH	SHOWER
SK	SINK
SP	STATIC PRESSURE OR SUMP PUMP
SSK	SERVICE SINK
SS	STAINLESS STEEL
ST	STAGES OF HEAT
S.W. T&B	SHORT WAY TOP & BOTTOM
T	TANK
TD	TRENCH DRAIN
TDH	TOTAL DYNAMIC HEAD
TOD	TOP OF DUCT
TOT	TOTAL HEAT
TYP	TYPICAL
T'STAT	THERMOSTAT
UCD	UNDER CUT DOOR
UH	UNIT HEATER
UNO	UNLESS NOTED OTHERWISE
UP	UP
UR	URINAL
V	VOLTS
VAV	VARIABLE AIR VOLUME
VB	VACUUM BREAKER
VEL	VELOCITY
VFD	VARIABLE FREQUENCY DRIVE
VSD	VARIABLE SPEED DRIVE
VTR	VENT THRU ROOF
W	WATTS
W X H	WIDTH BY HEIGHT
WB	WET BULB OR WASHER BOX
WC	WATER CLOSET
WC	WATER COLUMN
WG	WATER GAUGE
WH	WATER HEATER OR WALL HUNG
WL	WALL LOUVER
WMS	WIRE MESH SCREEN
WV	WET VENT
W/	WITH
W/O	WITHOUT

- PLUG
- PRESSURE REGULATING VALVE
- P-TRAP (ELEVATION, PLAN)
- RISER OR ELBOW (ELEVATION, UP, DOWN)
- STRAINER
- TEE (ELEVATION, UP, DOWN)
- PRESSURE GAUGE WITH GAUGE COCK
- THERMOMETER WITH THERMO-WELL
- UNION, FLANGED
- UNION, SCREWED
- M — WATER METER

PLUMBING ABBREVIATIONS & SYMBOLS

A	A	COMPRESSED AIR
	AAV	AUTOMATIC AIR VENT
	AV	ACID VENT
	AW	ACID WASTE
	BFP	BACKFLOW PREVENTER
	BFV	BUTTERFLY VALVE
	BLV	BALL VALVE
	CKV	CHECK VALVE
	CW	COLD WATER (POTABLE)
D	D	INDIRECT DRAIN
	ECO	EXTERIOR CLEANOUT (ELEVATION, PLAN)
	FCO	FLOOR CLEANOUT (ELEVATION, PLAN)
G	FD	FLOOR DRAIN (ELEVATION, PLAN)
	FDC	FIRE DEPARTMENT CONNECTION (SIAMESE)
	FH	FIRE HYDRANT
FP	FP	FIRE PROTECTION
G	G	NATURAL GAS
	GLV	GLOBE VALVE
	GV	GATE VALVE (GENERIC VALVE)
	HB	HOSE BIBB
	HD	HUB DRAIN
	HW	HOT WATER
	HWR	HOT WATER RECIRCULATING
	NFWH	NON-FREEZE WALL HYDRANT
NPW	NPW	NON-POTABLE WATER
	PIV	POST INDICATOR VALVE
	PRV	PRESSURE REDUCING VALVE
	RD	ROOF DRAIN
RW	RW	RAIN WATER CONDUCTOR
	SS	SANITARY AND/OR WASTE SEWER
G	SD	SHOWER DRAIN
SD	SD	STORM DRAIN
SP	SP	SPRINKLER WATER
	TP	TRAP PRIMER
	TPV	TEMPERATURE-PRESSURE RELIEF VALVE
TW	TW	TEMPERED WATER
UW	UW	UTILITY WATER
	V	VENT
	W	WASTE
	WCO	WALL CLEANOUT
	WHA	WATER HAMMER ARRESTOR
		ANGLE VALVE
		BALANCING VALVE
		BRANCH CONNECTION (TOP, BOTTOM)
	AFCO	ACID FLOOR CLEANOUT (ELEVATION, PLAN)
G	AHD	ACID HUD DRAIN (ELEVATION, PLAN)

FIRE SAFETY DEVICES

- SIGNAL INITIATING DETECTOR (FLAME, GAS, HEAT, SMOKE)
- PORTABLE FIRE EXTINGUISHER (NUMBER IN TRIANGLE IS TYPE)

PIPING ABBREVIATIONS & SYMBOLS

		CAP
		CENTER LINE
		CONCENTRIC REDUCER
		ECCENTRIC REDUCER
		EXPANSION JOINT (BELLOWS TYPE)
		FLEXIBLE CONNECTION
		FLOW ARROW
		GAS STOP
BA	BA	BREATHING AIR
BD	BD	BLOW DOWN
CHR	CHR	CHILLED WATER RETURN
CHS	CHS	CHILLED WATER SUPPLY
FOR	FOR	FUEL OIL RETURN
FOS	FOS	FUEL OIL SUPPLY
HWR	HWR	HOT WATER RETURN
HWS	HWS	HOT WATER SUPPLY
MU	MU	MAKE-UP WATER
RD	RD	REFRIGERANT DISCHARGE
RS	RS	REFRIGERANT SUCTION
WO	WO	WASTE OIL
		BLOW OFF STRAINER
		COUPLING (JOINT)
		CROSS
		ELBOW, 45
		EXPANSION LOOP
		FLOW BALANCING VALVE W/ INDICATOR
FS		FLOW SWITCH
		FUNNEL DRAIN, OPEN
MV		MANUAL AIR VENT
		NEEDLE VALVE
		PLUG VALVE
PS		PRESSURE SWITCH
		PUMP
PSD		PUMP SUCTION DIFFUSER
S		SOLENOID
		SPOOL PIECE, FLANGED
		SQUARE HEAD COCK
		STEAM TRAP (SPECIFY TYPE)
TW		THERMOMETER WELL (ONLY)
		THREE WAY VALVE
		TWO WAY VALVE
S		VALVE ACTUATOR, ELECTRIC SOLENOID
T		VALVE ACTUATOR, MANUAL NON-RISING STEM
		VALVE ACTUATOR, MANUAL OUTSIDE STEM & YOKE
M		VALVE ACTUATOR, ELECTRIC MOTOR
		EXISTING PIPE TO BE DEMOLISHED
		CONNECTION POINT OF NEW AND EXISTING PIPING OR DUCT

NO.	DATE	DESCRIPTION OF REVISION
0	11-15-07	INITIAL ISSUE

ful028m001.dwg 11.26.07

JORDAN JONES & GOULDING

BOARD OF COMMISSIONERS
FULTON COUNTY, GEORGIA

GEORGIA REGISTERED No. PE-28455 PROFESSIONAL ENGINEER SUNIL SEN S. PERAMANU 11/26/2007

W027 NORTH FULTON WATER SYSTEM IMPROVEMENTS

MECHANICAL LEGEND AND ABBREVIATIONS

DESIGNED: GT	CHECKED: SP	DATE: NOVEMBER 2007	M0.1	0
DRAWN: GT	JOB NO. 02016028	SCALE: NONE	SHEET	REV

THIS LINE IS ONE INCH LONG WHEN PLOTTED FULL SCALE

GTETRAULT

WALL LOUVER SCHEDULE

MARK	MODEL	SIZE (") (W X H)	CFM	MAX SP IN.WG.	FRAME	SCREEN	DAMPER	INTERLOCK	REMARKS
WL-101	ACL-845	60X60	5,820	0.10	BOX	BIRD	–	–	1,2
WL-102	ACL-845	60X60	5,820	0.10	BOX	BIRD	–	–	1,2
WL-201	ACL-845	60X60	5,820	0.10	BOX	BIRD	–	–	1,2
WL-202	ACL-845	60X60	5,820	0.10	BOX	BIRD	–	–	1,2

SELECTIONS BASED ON RUSKIN

REMARKS:

1. SEE ARCHITECTURAL DWGS. FOR LOUVER LOCATIONS.
2. ACOUSTICAL WALL LOUVER WITH KYNAR FINISH, COLOR TO MATCH BUILDING

FAN SCHEDULE

MARK	MODEL	TYPE	CFM	ESP IN.WG.	MAX HP	RPM	ELECTRICAL	REMARKS
EF-101	24XMW	PROPELLER WALL FAN	5,820	0.35"	3/4	1,296	460/3	1,2
SF-101	24XMW	PROPELLER WALL FAN	5,820	0.35"	3/4	1,296	460/3	1,3
EF-201	24XMW	PROPELLER WALL FAN	5,820	0.35"	3/4	1,296	460/3	1,2
SF-201	24XMW	PROPELLER WALL FAN	5,820	0.35"	3/4	1,296	460/3	1,3

UNLESS NOTED OTHERWISE, SELECTION BASED ON LOREN COOK

REMARKS:

1. PROVIDE WITH OSHA WIRE GUARD.
2. ALUMINUM GRAVITY SHUTTER.
3. MOTORIZED SUPPLY SHUTTER.

AIR CONDITIONING UNIT SCHEDULE (INDOOR UNIT)

MARK	MODEL	UNIT CFM	OA CFM	ESP IN. WG.	FAN HP	COOLING SENS. CAP. MBH	COOLING TOT. CAP. MBH	COOLING EDB dF	COOLING EWB dF	HEATING KW	HEATING STAGES	ELECTRICAL VOLT/PHASE/HZ	REMARKS
ACU-101	2TEC3F36B	1,200	–	0.5	1/3	24.1	34.0	80.0	67.0	–	–	208/1	1
ACU-201	2TEC3F36B	1,200	–	0.5	1/3	24.1	34.0	80.0	67.0	–	–	208/1	1

UNLESS NOTED OTHERWISE, SELECTION BASED ON TRANE

REMARKS:

1. FLOOR MOUNTED UPFLOW COOLING ONLY UNIT COMPLETE WITH FILTERS, ACCESS DOOR, SINGLE POINT POWER CONNECTION.

CONDENSING UNIT SCHEDULE (OUTDOOR UNIT)

MARK	MODEL	OA °F	CAPACITY (MBH)	INDOOR UNIT	ELECTRICAL VOLT/PHASE	MCA	REMARKS
CU-101	2TTA036	95	SEE ACU SCHEDULE	ACU-101	460/3	15	1
CU-201	2TTA036	95	SEE ACU SCHEDULE	ACU-201	460/3	15	1

UNLESS NOTED OTHERWISE, SELECTION BASED ON TRANE

REMARKS

1. PROVIDE LOW AMBIENT CONTROLS, COIL GUARD AND SCROLL COMPRESSOR

DIFFUSER, GRILLE, AND REGISTER SCHEDULE

MARK	MODEL	FACE SIZE IN.	NECK SIZE IN.	MAX. CFM	MAX. SP. IN.	MAX. NC	SERVICE	DAMPER	REMARKS
A	300FS	18X10	18X10	650	0.1	23	SUPPLY	OBVD	1

UNLESS NOTED OTHERWISE, SELECTION BASED ON TITUS

REMARKS:

1. ALUMINUM CONSTRUCTION INCLUDING DAMPER.

ELECTRIC UNIT HEATER SCHEDULE

MARK	MODEL	KW	FAN CFM	FAN HP	ELECT. VOLT/PHASE	REMARKS
EUH-101	HDH-A-500	5	405	1/15	460/3	1,2,3
EUH-102	LUH-02-81	2.6	310	1/50	208/1	1,2
EUH-201	HDH-A-500	5	405	1/15	460/3	1,2,3
EUH-202	LUH-02-81	2.6	310	1/50	208/1	1,2

UNLESS NOTED OTHERWISE, SELECTION BASED ON CHROMALOX

REMARKS:

1. WALL MOUNTING BRACKET.
2. INTEGRAL THERMOSTAT.
3. HOSE DOWN CORROSION RESISTANT TYPE HEATER.

NO.	DATE	DESCRIPTION OF REVISION
0	11-15-07	INITIAL ISSUE

ful028m002.dwg 11.26.07

JORDAN JONES & GOULDING

BOARD OF COMMISSIONERS
FULTON COUNTY, GEORGIA

GEORGIA REGISTERED PROFESSIONAL ENGINEER SUNILSEN S. PERAMANU 11/26/2007

W027 NORTH FULTON WATER SYSTEM IMPROVEMENTS

MECHANICAL SCHEDULES

DESIGNED: GT	CHECKED: SP	DATE: NOVEMBER 2007	M0.2	0
DRAWN: GT	JOB NO. 02016028	SCALE: NONE	SHEET	REV

THIS LINE ____ IS ONE INCH LONG WHEN PLOTTED FULL SCALE

GTETRAULT

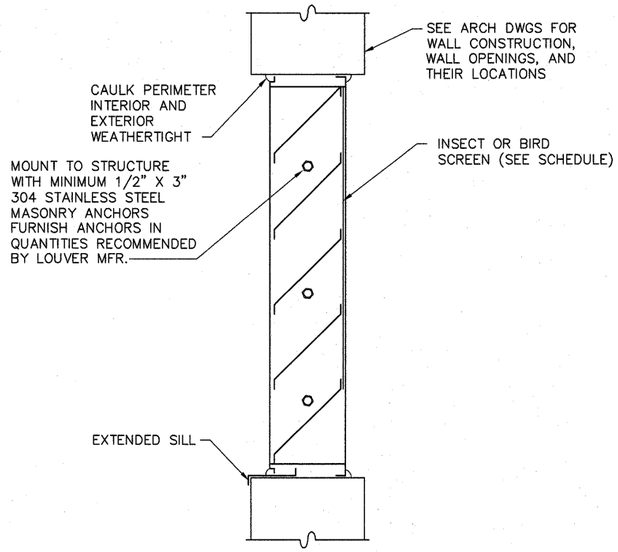

WALL LOUVER DETAIL (1 / M0.3)

NTS

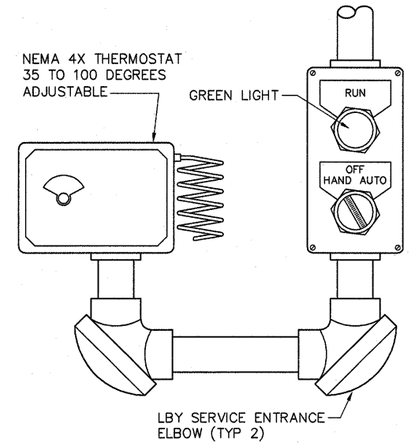

NOTES:

1. FIELD ROUTE CONDUIT FOR T'STAT AND SWITCH. PROVIDE AND INSTALL CONDUIT OF THE SAME TYPE AND IN THE SAME MANNER AS REQUIRED IN SPECIFICATION SECTION 16111 SUITABLE FOR ELECTRICAL AREA CLASSIFICATION OF THE SPACE.
2. INSTALL NEMA 4X THERMOSTAT WITHOUT SWITCH IN A SIMILAR MANNER.

HOA & NEMA 4X T'STAT (2 / M0.3)

NTS

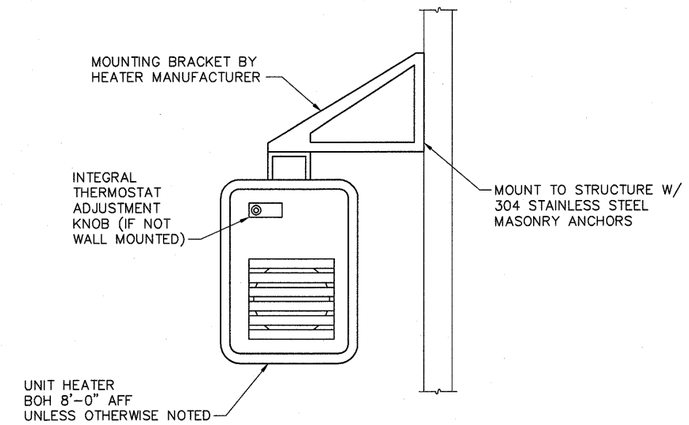

UNIT HEATER MOUNTING (3 / M0.3)

NTS

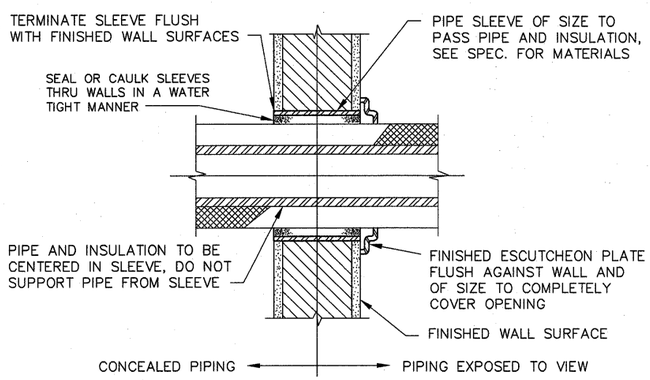

EXTERIOR/INTERIOR WALLS

PIPE SLEEVE/PIPE THRU WALL (4 / M0.3)

NTS

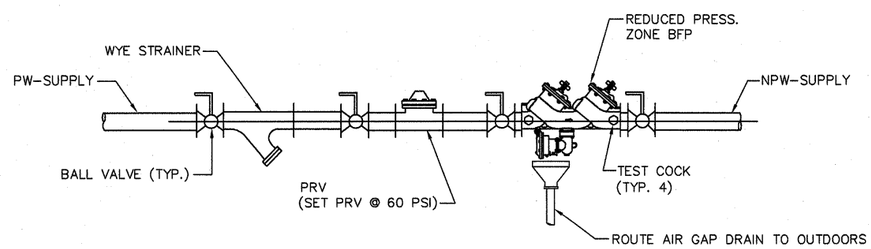

NOTE: 1. REFER TO DRAWINGS FOR PIPE SIZE
2. MOUNT BACKFLOW PREVENTER @ ±4'-0" AFF

RPZ BACKFLOW PREVENTER ASSEMBLY (BFP-1) (5 / M0.3)

NTS

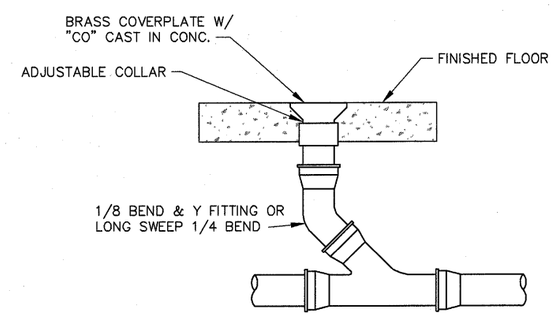

TYPICAL CLEANOUT (6 / M0.3)

NTS

NO.	DATE	DESCRIPTION OF REVISION
0	11-15-07	INITIAL ISSUE

ful028m003.dwg 11.26.07

JORDAN JONES & GOULDING

BOARD OF COMMISSIONERS
FULTON COUNTY, GEORGIA

GEORGIA REGISTERED No. PE-28455 PROFESSIONAL ENGINEER SANJISEN S. PERMANNI 11/26/2007

W027 NORTH FULTON WATER SYSTEM IMPROVEMENTS

MECHANICAL DETAILS

DESIGNED: GT	CHECKED: SP	DATE: NOVEMBER 2007	M0.3	0
DRAWN: GT	JOB NO. 02016028	SCALE: NONE	SHEET	REV

THIS LINE IS ONE INCH LONG WHEN PLOTTED FULL SCALE

GTETRAULT

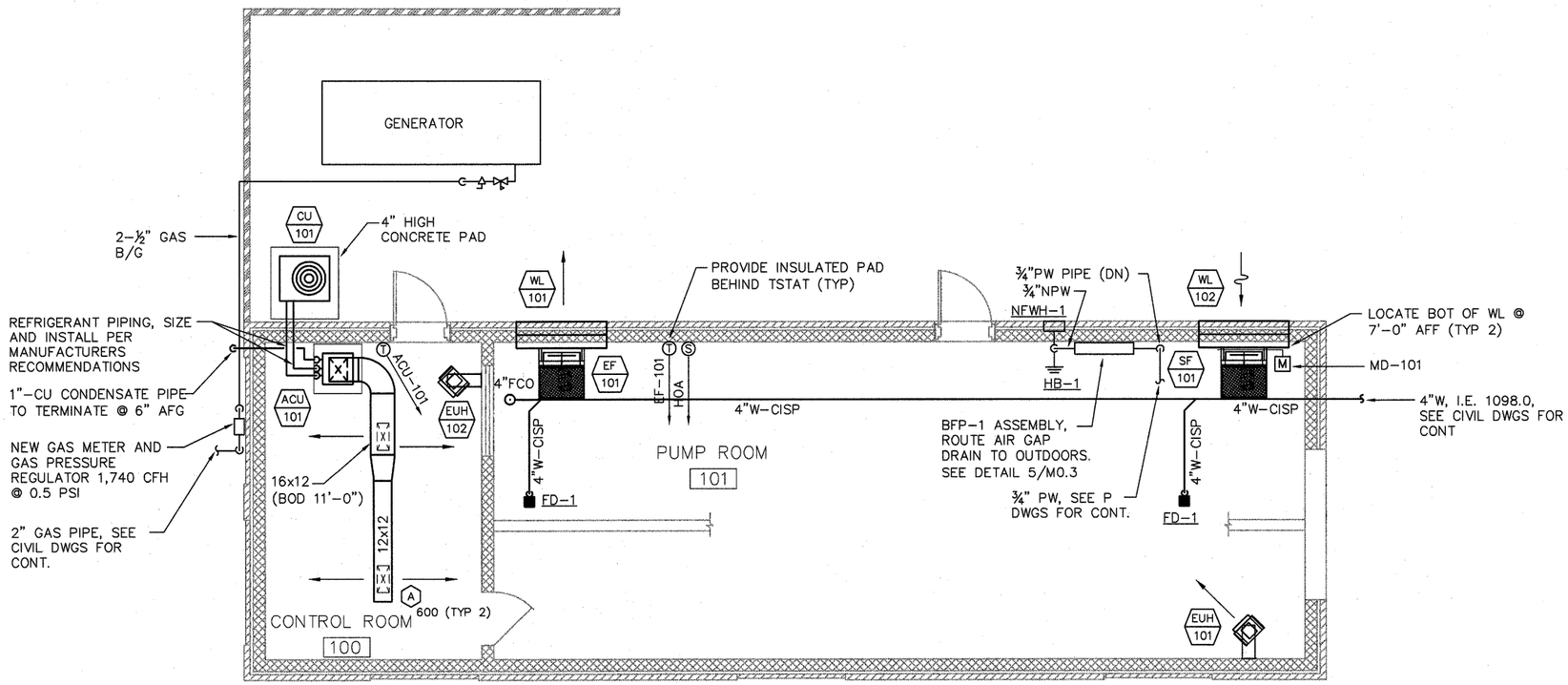

PLAN
1/4" = 1'-0"

NO.	DATE	DESCRIPTION OF REVISION
0	11-15-07	INITIAL ISSUE

ful028ma01.dwg 11.26.07

JORDAN JONES & GOULDING

BOARD OF COMMISSIONERS
FULTON COUNTY, GEORGIA

GEORGIA REGISTERED No. PE-28455 PROFESSIONAL ENGINEER SUNILSEN S. PERAMANU 11/26/2007

W027 NORTH FULTON WATER SYSTEM IMPROVEMENTS

MANSELL ROAD BOOSTER PUMP STATION
MECHANICAL PLAN

DESIGNED: GT	CHECKED: SP	DATE: NOVEMBER 2007	M1.1	0
DRAWN: GT	JOB NO. 02016028	SCALE: 1/4" = 1'-0"	SHEET	REV

THIS LINE IS ONE INCH LONG WHEN PLOTTED FULL SCALE

GTETRAULT

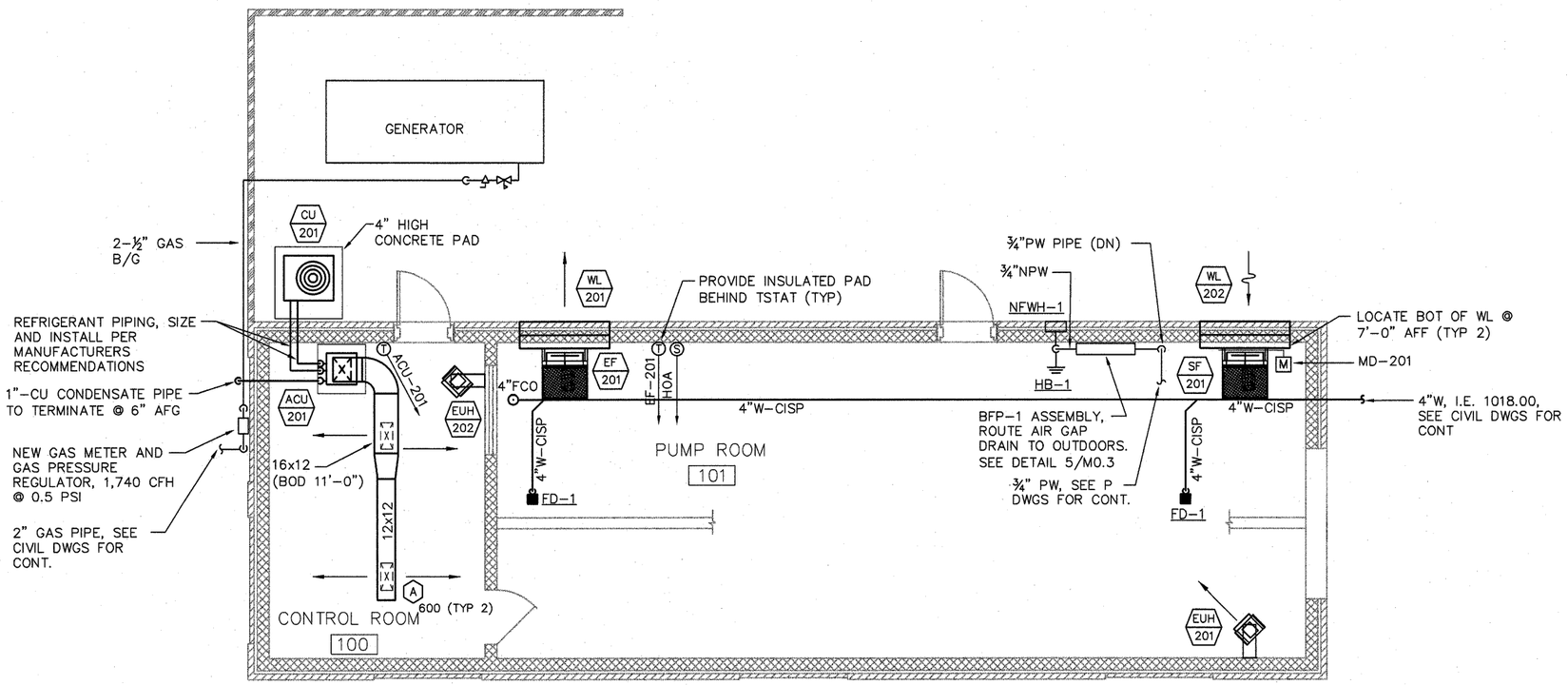

PLAN
1/4" = 1'-0"

NO.	DATE	DESCRIPTION OF REVISION
0	11-15-07	INITIAL ISSUE

ful028mb01.dwg 11.26.07

JORDAN JONES & GOULDING

BOARD OF COMMISSIONERS
FULTON COUNTY, GEORGIA

GEORGIA REGISTERED No. PE-28455 PROFESSIONAL ENGINEER SUNILSEN S. PERAMANU 11-26-2007

W027 NORTH FULTON WATER SYSTEM IMPROVEMENTS

PROVIDENCE ROAD BOOSTER PUMP STATION
MECHANICAL PLAN

DESIGNED: GT	CHECKED: SP	DATE: NOVEMBER 2007	M2.1	0
DRAWN: GT	JOB NO. 02016028	SCALE: 1/4" = 1'-0"	SHEET	REV

THIS LINE IS ONE INCH LONG WHEN PLOTTED FULL SCALE

GTETRAULT

CONTROL/ONE-LINE SYMBOLS

- SELECTOR SWITCH, DPTT
- PUSHBUTTON, NORMALLY OPEN
- PUSHBUTTON, NORMALLY CLOSED
- MAINTAINED LOCK-OUT SWITCH, N.O.
- MAINTAINED LOCK-OUT SWITCH, N.C.
- SELECTOR SWITCH, SPST
- SWITCH, NORMALLY OPEN (TYP)
- SWITCH, NORMALLY CLOSED (TYP)
- TIME DELAY PICK-UP
- TIME DELAY DROPOUT
- LIMIT SWITCH
- PRESSURE SWITCH
- LEVEL SWITCH
- TEMPERATURE SWITCH
- FLOW SWITCH
- RELAY COIL
- CONTACT, NORMALLY OPEN
- CONTACT, NORMALLY CLOSED
- CAPACITOR
- INDICATING LIGHT, LETTER DENOTES COLOR
- ANNUNCIATOR LIGHT
- WIRING NOT CONNECTED
- WIRING CONNECTED
- GROUND CONNECTION
- TERMINAL
- REMOTE LOCATION
- HEATER OR HEATING ELEMENT
- ELAPSED TIME METER
- FUSE
- CURRENT TRANSFORMER, RATIO AS INDICATED
- TRANSFORMER
- CIRCUIT BREAKER, TRIP/FRAME OR AMPS/POLES
- DISCONNECT STAB
- HIGH VOLTAGE CIRCUIT BREAKER
- DISCONNECT SWITCH
- OVERLOAD ELEMENT
- KIRK KEY INTERLOCK
- AMMETER SWITCH AND AMMETER

CONTROL/ONE-LINE SYMBOLS

- VOLTMETER SWITCH AND VOLTMETER
- WATTMETER
- VARIABLE FREQUENCY DRIVE
- SOLID STATE REDUCED VOLTAGE STARTER
- AVAILABLE SHORT CIRCUIT CURRENT, RMS SYMMETRICAL MOMENTARY VALUE
- WATTHOUR METER
- UNINTERRUPTIBLE POWER SYSTEM, KVA RATING/ INPUT VOLTAGE – OUTPUT VOLTAGE, PHASE
- RECTIFIER
- SOLENOID VALVE
- POTENTIOMETER
- AUDIBLE DEVICE
- FULL WAVE RECTIFIER
- SHIELDED CABLE AND GROUND
- GROUND FAULT
- MOTOR OPERATOR
- SHUNT TRIP
- TRANSFER SWITCH – CONTACT TYPE
- TRANSFER SWITCH – MCCB TYPE

ELECTRICAL ABBREVIATIONS

AFF	– ABOVE FINISHED FLOOR
AFG	– ABOVE FINISHED GRADE
AIC	– AMPS INTERRUPTING CAPACITY
AL	– ALUMINUM
ATS	– AUTOMATIC TRANSFER SWITCH
C	– CONDUIT
CPT	– CONTROL POWER TRANSFORMER
CR	– CORROSION RESISTANT, NEMA 4X
CT	– CURRENT TRANSFORMER
CU	– COPPER
EC	– EMPTY CONDUIT
EMH	– ELECTRICAL MANHOLE
EPB	– PULLBOX FOR EMERGENCY POWER CONDUCTORS
EX	– EXISTING
EXP	– EXPLOSIONPROOF
EXR	– EXISTING TO BE REMOVED
FACP	– FIRE ALARM CONTROL PANEL
FCP	– FACTORY CONTROL PANEL (PROVIDED WITH EQUIPMENT)
FVNR	– FULL VOLTAGE, NON-REVERSING
FVR	– FULL VOLTAGE, REVERSING
FWE	– FURNISHED WITH EQUIPMENT
G	– GROUND
GFI	– GROUND FAULT INTERRUPTING
GRS	– GALVANIZED RIGID STEEL CONDUIT
HH	– HANDHOLE
HTMP	– HEAT TRACE MONITOR PANEL
LA	– LIGHTNING ARRESTER
LCP	– LOCAL CONTROL PANEL (PROVIDED UNDER DIVISION 17)
LCT	– LIGHTING CONTACTOR
MB	– MAIN BREAKER
MCC	– MOTOR CONTROL CENTER
MCCB	– MOLDED CASE CIRCUIT BREAKER
MCP	– MOTOR CIRCUIT PROTECTOR
MH	– MANHOLE
ML	– MAIN LUGS
MLO	– MAIN LUGS ONLY
NC	– NORMALLY CLOSED
NO	– NORMALLY OPEN
OCEW	– ON CENTER EACH WAY
OL	– OVERLOAD
PB	– PULLBOX
PT	– POTENTIAL TRANSFORMER
RVAT	– REDUCED VOLTAGE AUTOTRANSFORMER
SHLD	– SHIELDED CABLE
SS	– STAINLESS STEEL
SSRV	– SOLID STATE REDUCED VOLTAGE
SUB	– SUBSTATION
T	– TRANSFORMER
TSP	– TWISTED, SHIELDED PAIR
TVSS	– TRANSIENT VOLTAGE SURGE SUPPRESSOR
VFD	– VARIABLE FREQUENCY DRIVE
VSD	– VARIABLE SPEED DRIVE
WP	– WEATHERPROOF, NEMA 4 OR 3R
2S2W	– TWO SPEED TWO WINDING

NO.	DATE	DESCRIPTION OF REVISION
0	11-15-07	INITIAL ISSUE

ful028E001.dwg 11.26.07

JORDAN JONES & GOULDING

BOARD OF COMMISSIONERS
FULTON COUNTY, GEORGIA

GEORGIA REGISTERED PROFESSIONAL ENGINEER THOMAS H. MIDDLEBROOKS 11/26/07

W027 NORTH FULTON WATER SYSTEM IMPROVEMENTS

SYMBOLS LEGEND

DESIGNED: MAS	CHECKED:	DATE: NOVEMBER 2007	E0.1	0
DRAWN: MAS	JOB NO. 02016028	SCALE: NONE	SHEET	REV

THIS LINE ____ IS ONE INCH LONG WHEN PLOTTED FULL SCALE

MSMITH

ELECTRICAL SYMBOLS

- FA – FLUORESCENT FIXTURE. LETTERS DENOTE FIXTURE TYPE (TYPICAL). SHADING INDICATES NIGHTLIGHT (TYPICAL). NUMERAL INDICATES CIRCUIT NUMBER (TYPICAL). SUBSCRIPT CORRESPONDS WITH SIMILARLY IDENTIFIED SWITCH OR MULTI–WAY SWITCH GROUP (TYPICAL)
- FA – FLUORESCENT FIXTURE, FLUSH IN CEILING. WITH BATTERY/INVERTER BALLAST
- FA – FLUORESCENT STRIP FIXTURE
- – TRACK LIGHTING ASSEMBLY
- HA – LIGHTING FIXTURE, FLUSH IN CEILING
- HA – LIGHTING FIXTURE, SURFACE ON OR PENDANT MOUNT FROM CEILING
- HA – LIGHTING FIXTURE, WALL MOUNTED
- HA/PA – POLE AND LIGHTING FIXTURE
- XA – EXIT LIGHT SURFACE MOUNTED ON CEILING, ARROWS INDICATE DIRECTION
- XA – EXIT LIGHT SURFACE MOUNTED ON WALL, ARROWS INDICATE DIRECTION
- BA – BATTERY POWERED EMERGENCY LIGHT
- PE – PHOTOELECTRIC CELL
- – DUPLEX RECEPTACLE, 18" AFF UNLESS OTHERWISE INDICATED. NUMERAL INDICATES CIRCUIT NUMBER (TYPICAL)
- – DUPLEX RECEPTACLE, 48" AFF OR 6" ABOVE COUNTER TOP
- – SINGLE RECEPTACLE, 18" AFF UNLESS OTHERWISE INDICATED
- – SINGLE RECEPTACLE, 48" AFF OR 6" ABOVE COUNTER TOP
- – SPECIAL PURPOSE RECEPTACLE, MOUNTING HEIGHT AND NEMA TYPE AS INDICATED
- – FLUSH FLOOR BOX AS INDICATED
- – DUPLEX RECEPTACLE, FLOOR MOUNTED
- – CONTINUOUS RECEPTACLE PLUGMOLD, MOUNTING HEIGHT AND OUTLETS AS INDICATED
- TV – TELEVISION OUTLET IN WALL, BUSHED HOLE IN PLATE WITH EMPTY 3/4" CONDUIT HOMERUN TO TELEVISION CABINET, 18" AFF UNLESS OTHERWISE INDICATED
- C – CLOCK OUTLET, 7'–6" AFF
- S – SPEAKER, FLUSH IN CEILING
- S – SPEAKER, WALL MOUNTED 7'–6" AFF
- C – COMPUTER TERMINAL OUTLET IN WALL, BUSHED HOLE IN PLATE WITH EMPTY 3/4" CONDUIT HOMERUN WITH PULL WIRE TO COMPUTER BACKBOARD, 18" AFF UNLESS OTHERWISE INDICATED
- C – CLOSED CIRCUIT TELEVISION CAMERA
- – TELEPHONE OUTLET IN WALL, BUSHED HOLE IN PLATE WITH EMPTY 1" CONDUIT HOMERUN WITH PULL WIRE TO TELEPHONE BACKBOARD, 18" AFF UNLESS OTHERWISE INDICATED
- T – 3/4" PLYWOOD BACKBOARD FOR TELEPHONE (HEIGHT AND WIDTH AS INDICATED)
- C – 3/4" PLYWOOD BACKBOARD FOR COMPUTER (HEIGHT AND WIDTH AS INDICATED)
- S – SINGLE POLE SWITCH, 48" AFF UNLESS OTHERWISE INDICATED. NUMERAL IN PARENTHESIS INDICATES CIRCUIT NUMBER (TYPICAL). SUBSCRIPT CORRESPONDS WITH SIMILARLY IDENTIFIED LIGHTING FIXTURES (TYPICAL)
- S_2 – DOUBLE POLE SWITCH, 48" AFF UNLESS OTHERWISE INDICATED
- S_3 – THREE WAY SWITCH, 48" AFF UNLESS OTHERWISE INDICATED
- S_4 – FOUR WAY SWITCH, 48" AFF UNLESS OTHERWISE INDICATED
- S_M – MANUAL MOTOR STARTER, SINGLE POLE 1 Hp UNLESS OTHERWISE INDICATED
- S_D – SINGLE POLE DIMMER SWITCH, WATTAGE AS INDICATED, 48" AFF UNLESS OTHERWISE INDICATED
- S_P – SINGLE POLE SWITCH WITH PILOT LIGHT, 48" AFF UNLESS OTHERWISE INDICATED
- S_K – SINGLE POLE KEY SWITCH, 48" AFF UNLESS OTHERWISE INDICATED
- – WIRING IN CONDUIT CONCEALED IN OR ABOVE CEILING OR IN WALL
- – WIRING IN CONDUIT CONCEALED IN OR UNDER FLOOR, OR UNDERGROUND CONCRETE ENCASED SINGLE CONDUIT DUCTBANK

ELECTRICAL SYMBOLS

- – WIRING IN CONDUIT EXPOSED ON CEILING OR WALL
- GND – BRANCH CIRCUIT WIRING IN 3/4" CONDUIT HOMERUN AS INDICATED. ONE ARROW PER CIRCUIT. SLASHES INDICATE NUMBER OF CONDUCTORS, #12 UNLESS OTHERWISE INDICATED
- – SIGNAL CONDUCTOR IN 3/4" CONDUIT, #16TSP UNLESS OTHERWISE INDICATED
- – SEAL–OFF FITTING IN EXPOSED CONDUIT
- – EMPTY CONDUIT CAPPED AND TAGGED "SPARE, TO_____"
- – CONDUIT TURNS UP (TOWARDS VIEWER)
- – CONDUIT TURNS DOWN (AWAY FROM VIEWER)
- – FLEXIBLE CONDUIT CONNECTION
- – INDICATES CONDUCTORS IN 3/4" CONDUIT UNLESS OTHERWISE INDICATED:
  "A" INDICATES ANALOG SIGNAL CONDUCTORS. SEE SCHEDULE.
  "C" INDICATES DISCRETE OR CONTROL CONDUCTORS. SEE SCHEDULE.
  "D" INDICATES DATA HIGHWAY CONDUCTORS. SEE SCHEDULE.
  DATA HIGHWAY CABLES ARE PROVIDED BY DIVISION 17 AND INSTALLED BY DIVISION 16.
  "H" INDICATES POWER CONDUCTORS ABOVE 240 VOLTS. SEE SCHEDULE.
  "L" INDICATES POWER CONDUCTORS 240 VOLTS AND BELOW. SEE SCHEDULE.
  "P" INDICATES POWER CONDUCTORS ABOVE 600 VOLTS. SEE SCHEDULE.
- – INDICATES UNDERGROUND ELECTRICAL DUCTBANK. SEE SCHEDULE
- D – UNDERGROUND ELECTRICAL DUCTBANK. SEE DETAIL (TYPICAL)
- UT – UNDERGROUND TELEPHONE DUCTBANK
- UC – UNDERGROUND COMMUNICATION OR DATA HIGHWAY DUCTBANK
- G – 4/0 BARE COPPER GROUND WIRE
- LP – LIGHTNING PROTECTION CABLE
- UE – EXISTING UNDERGROUND ELECTRICAL DUCTBANK
- UEC – EXISTING UNDERGROUND COMMUNICATION OR DATA HIGHWAY DUCTBANK
- DUD – EXISTING UNDERGROUND ELECTRICAL DUCTBANK TO BE DEMOLISHED
- E – EXISTING OVERHEAD POWER LINES
- E – ELECTRICAL MANHOLE OR HANDHOLE, SIZE AS INDICATED (L x W x D):
  "C" INDICATES CONTROL, COMMUNICATION OR DATA HIGHWAY.
  "E" INDICATES SECONDARY DISTRIBUTION.
  "P" INDICATES PRIMARY DISTRIBUTION.
  "S" INDICATES SIGNAL.
  "T" INDICATES TELEPHONE.
- – POWER POLE
- – PANELBOARD, 240 VOLTS AND BELOW. SEE SCHEDULE
- – PANELBOARD, ABOVE 240 VOLTS. SEE SCHEDULE
- OR – SUPPORT STAND/EQUIPMENT RACK. SEE DETAIL
- – DEVICE REQUIRING ELECTRICAL CONNECTION, TYPE AS INDICATED (INSTRUMENT DESIGNATIONS PER ISA)
- – MOTOR STARTER, VOLTAGE/NEMA SIZE/NEMA ENCLOSURE
- – COMBINATION MOTOR STARTER, VOLTAGE/NEMA SIZE/NEMA ENCLOSURE
- – CONTROLLER FURNISHED WITH EQUIPMENT
- N – NON–FUSED SAFETY SWITCH, AMPS/POLES/NEMA ENCLOSURE
- F – FUSED SAFETY SWITCH, AMPS/FUSE/POLES/NEMA ENCLOSURE
- – ENCLOSED CIRCUIT BREAKER, AMPS/POLES/NEMA ENCLOSURE
- T – TRANSFORMER, KVA RATING AS INDICATED ON ONE LINE DIAGRAM
- M – MOTOR, Hp AS INDICATED ON ONE LINE DIAGRAM OR ON PLAN
- G – GENERATOR, kW AS INDICATED ON ONE LINE DIAGRAM
- D – OVERHEAD DOOR OPERATOR COMPLETE WITH WIRING TO PUSHBUTTONS, LIMIT SWITCHES AND OTHER ACCESSORIES
- ***** – EQUIPMENT TAG

ELECTRICAL SYMBOLS

- J – JUNCTION BOX OR PULL BOX. LETTERS/NUMERALS INDICATE NEMA TYPE OTHER THAN NEMA 1:
  "A" INDICATES ANALOG SIGNAL CONDUCTORS ONLY.
  "C" INDICATES CONTROL AND/OR COMMUNICATION CONDUCTORS.
  "D" INDICATES DATA HIGHWAY CONDUCTORS ONLY.
  "E" INDICATES GENERAL ELECTRICAL SYSTEM CONDUCTORS.
  "H" INDICATES POWER CONDUCTORS ABOVE 240 VOLTS.
  "L" INDICATES POWER CONDUCTORS 240 VOLTS AND BELOW.
  "P" INDICATES POWER CONDUCTORS ABOVE 600 VOLTS.
  "S" INDICATES SIGNAL CONDUCTORS (ANALOG AND/OR DATA HIGHWAY).
  "T" INDICATES TELEPHONE CONDUCTORS ONLY.
- – OUTLET BOX OR CONDUIT FITTING
- – CONTROL STATION
- – GROUND ROD
- – GROUND TEST WELL
- – GROUND CONNECTION
- – GROUND PLATE, SEE DETAIL
- F – FIRE ALARM DEVICE:
  "F" INDICATES MANUAL PULLSTATION MOUNTED 48" AFF.
  "FL" INDICATES FLAME DETECTOR MOUNTED AS INDICATED.
  "FS" INDICATES SPRINKLER FLOW SWITCH.
  "H" INDICATES HEAT DETECTOR MOUNTED ON CEILING.
  "P" INDICATES PHOTOELECTRIC IONIZATION DETECTOR MOUNTED ON CEILING.
  "S" INDICATES SMOKE DETECTOR MOUNTED ON CEILING.
  "TS" INDICATES SPRINKLER TAMPER SWITCH.
  "V" INDICATES VISUAL INDICATOR (STROBE) MOUNTED AS INDICATED.
- S – SMOKE DETECTOR, DUCT MOUNTED
- F – FIRE ALARM SYSTEM HORN MOUNTED 6'–8" AFF
- F – FIRE ALARM SYSTEM HORN AND STROBE MOUNTED 6'–8" AFF

NO.	DATE	DESCRIPTION OF REVISION
0	11–15–07	INITIAL ISSUE

ful028E002.dwg 11.26.07

JORDAN JONES & GOULDING

BOARD OF COMMISSIONERS
FULTON COUNTY, GEORGIA

GEORGIA REGISTERED PROFESSIONAL ENGINEER THOMAS H MIDDLEBROOKS 11/26/07

W027 NORTH FULTON WATER SYSTEM IMPROVEMENTS

SYMBOLS LEGEND

DESIGNED: MAS	CHECKED:	DATE: NOVEMBER 2007	E0.2 SHEET	0 REV
DRAWN: MAS	JOB NO. 02016028	SCALE: NONE		

THIS LINE IS ONE INCH LONG WHEN PLOTTED FULL SCALE

MSMITH

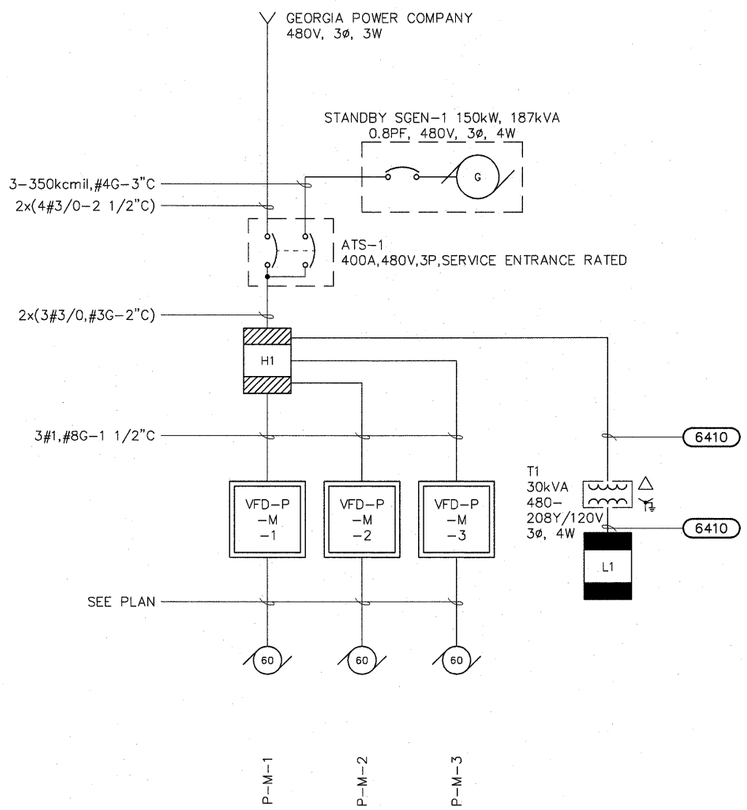

MANSELL ROAD BOOSTER PUMP STATION

ELECTRIC SERVICE PROVIDER
GEORGIA POWER COMPANY
CONTACT: PETE AUFTAMORTE
770-216-1391

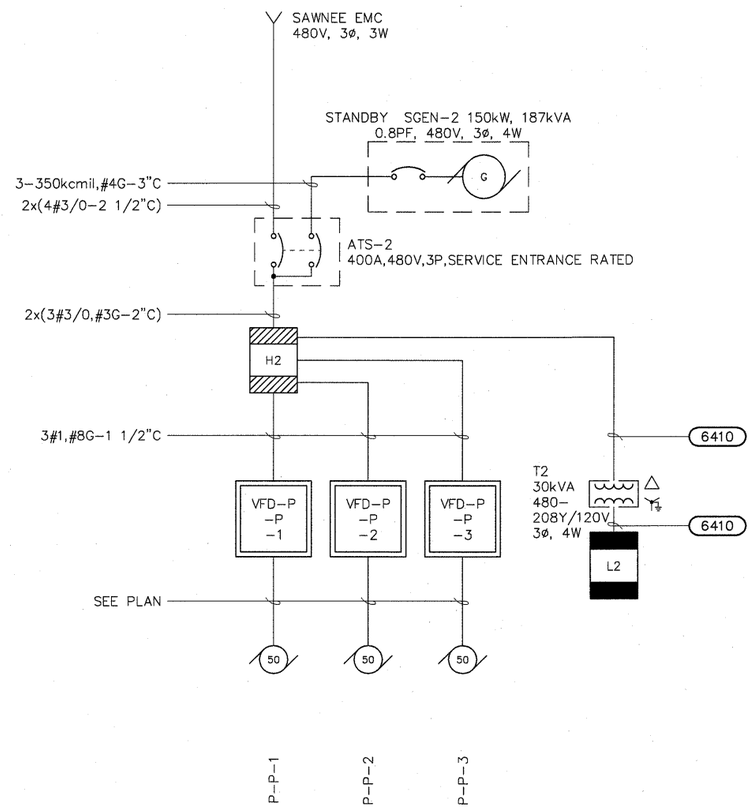

PROVIDENCE ROAD BOOSTER PUMP STATION

ELECTRIC SERVICE PROVIDER
SAWNEE EMC
CONTACT: KEITH THOMPSON
770-887-2363

NO.	DATE	DESCRIPTION OF REVISION
0	11-15-07	INITIAL ISSUE

ful028E003.dwg 11.26.07

JORDAN JONES & GOULDING

BOARD OF COMMISSIONERS
FULTON COUNTY, GEORGIA

GEORGIA REGISTERED PROFESSIONAL ENGINEER No. 17022 THOMAS H. MIDDLEBROOKS 11/26/07

W027 NORTH FULTON WATER SYSTEM IMPROVEMENTS

ONE-LINE DIAGRAMS

DESIGNED: MAS	CHECKED:	DATE: NOVEMBER 2007	E0.3	0
DRAWN: MAS	JOB NO. 02016028	SCALE: NONE	SHEET	REV

THIS LINE ___ IS ONE INCH LONG WHEN PLOTTED FULL SCALE

MSMITH

LIGHTING FIXTURE SCHEDULE

FIXTURE REF.	FIXTURE TYPE CATALOG DESCRIPTION	LAMP	VOLT.	MOUNTING
BA	EMERGENCY LUMINAIRE: HOLOPHANE CORTEZ A1 12V NICKEL CADMIUM BATTERIES, TWO LAMP HEADS, 25W LAMPS	WITH UNIT	120	WALL 10'-0" AFF
FA	FLUORESCENT LUMINAIRE: LITHONIA DM/DMW SERIES DAMP/WET LOCATION ENCLOSED INDUSTRIAL 4' 2LAMP T8 ELEC	2-F32T8	120	13'-0" PENDANT
FB	FLUORESCENT LUMINAIRE: LITHONIA AF SERIES HEAVY DUTY INDUSTRIAL SOLID TOP, 13.5" X 4', 3LAMP T8, 1/3 ELEC AFST SOLID REFLECTOR	3-F32T8	120	13'-0" PENDANT
HA	HID LUMINAIRE: HOLOPHANE WALLPACK IV UL 1572 LISTED, WET LOCATION, THERMAL SHOCK RESISTANT, PRISMATIC GLASS REFRACTOR, BRONZE PAINT FINISH, STANDARD ENTRY PE CELL	70W HPS	120	WALL 8'-0" AFF
XA	EXIT LIGHT: HOLOPHANE MAGELLAN QT NICKEL CADMIUM BATTERIES, WHITE TRIM PLATE, WHITE BACKGROUND FACE/RED LETTER, SINGLE FACE	LED/ WITH UNIT	120	CEILING

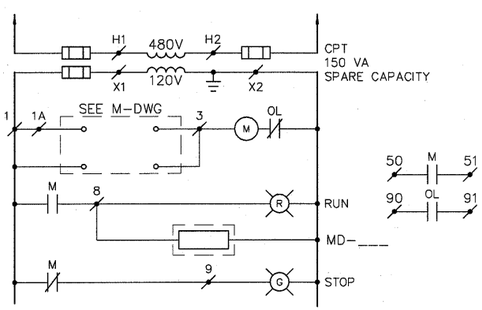

STARTER TYPE AA

NOTE:
TYPE AA STARTERS FOR MECHANICAL EQUIPMENT SHALL BE CONFIGURED AS FOLLOWS:

EF/SF-***	INTERFACE	ACCESSORY
EF-101	T'STAT/HOA	
SF-101	EF-101	MD-101
EF-201	T'STAT/HOA	
SF-201	EF-201	MD-201

COORDINATE CONTROLS WITH THE REQUIREMENTS OF DIVISION 15.

TAG: H1			MANSELL ROAD P.S.	AIC: 14,000	
MAINS: 400A MLO			BOTTOM ENTRY	TVSS: YES	
SERVICE: 480V,3p,3W			* = GFCI CIRCUIT BREAKER	TRIM: SURFACE	
CKT	C/B	LOAD	LOAD	C/B	CKT
1	100/3	VFD-P-M-1	EUH-101	20/3	2
3	–	–	–	–	4
5	–	–	–	–	6
7	100/3	VFD-P-M-2	CU-101	20/3	8
9	–	–	–	–	10
11	–	–	–	–	12
13	100/3	VFD-P-M-3	V-M-1	20/3	14
15	–	–	–	–	16
17	–	–	–	–	18
19	20/3	CMS-EF-101	V-M-2	20/3	20
21	–	–	–	–	22
23	–	–	–	–	24
25	20/3	CMS-SF-101	V-M-3	20/3	26
27	–	–	–	–	28
29	–	–	–	–	30
31	20/3	SPARE	SPARE	20/3	32
33	–	–	–	–	34
35	–	–	–	–	36
37	20/3	SPARE	T1 / PANEL L1	50/3	38
39	–	–	–	–	40
41	–	–	–	–	42

TAG: L1			MANSELL ROAD P.S.	AIC: 10,000	
MAINS: 100A MB			BOTTOM ENTRY	TVSS: YES	
SERVICE: 208/120V,3p,4W			* = GFCI CIRCUIT BREAKER	TRIM: SURFACE	
CKT	C/B	LOAD	LOAD	C/B	CKT
1	20/1	LCP-1	PUMP ROOM LIGHTING	20/1	2
3	20/1	FIT-170	ELEC ROOM LIGHTING	20/1	4
5	30/3	SGEN-1	OUTDOOR LIGHTING	20/1	6
7	–	–	PUMP ROOM RECEPT	20/1	8
9	–	–	ELEC ROOM RECEPT	20/1	10
11	20/2	ACU-101	OUTDOOR RECEPT	20/1	12
13	–	–	RTU-A	20/1	14
15	30/2	EUH-102	RTU-B	20/1	16
17	–	–	SPARE	20/1	18
19	20/1	SPARE	SPARE	20/1	20
21	20/1	SPARE	SPARE	20/1	22
23	20/1	SPARE	SPARE	20/1	24
25	1P	SPACE	SPACE	1P	26
27	1P	SPACE	SPACE	1P	28
29	1P	SPACE	SPACE	1P	30

TAG: H2			PROVIDENCE ROAD P.S.	AIC: 14,000	
MAINS: 400A MLO			BOTTOM ENTRY	TVSS: YES	
SERVICE: 480V,3p,3W			* = GFCI CIRCUIT BREAKER	TRIM: SURFACE	
CKT	C/B	LOAD	LOAD	C/B	CKT
1	100/3	VFD-P-P-1	EUH-201	20/3	2
3	–	–	–	–	4
5	–	–	–	–	6
7	100/3	VFD-P-P-2	CU-201	20/3	8
9	–	–	–	–	10
11	–	–	–	–	12
13	100/3	VFD-P-P-3	V-P-1	20/3	14
15	–	–	–	–	16
17	–	–	–	–	18
19	20/3	CMS-EF-201	V-P-2	20/3	20
21	–	–	–	–	22
23	–	–	–	–	24
25	20/3	CMS-SF-201	V-P-3	20/3	26
27	–	–	–	–	28
29	–	–	–	–	30
31	20/3	SPARE	SPARE	20/3	32
33	–	–	–	–	34
35	–	–	–	–	36
37	20/3	SPARE	T2 / PANEL L2	50/3	38
39	–	–	–	–	40
41	–	–	–	–	42

TAG: L2			PROVIDENCE ROAD P.S.	AIC: 10,000	
MAINS: 100A MB			BOTTOM ENTRY	TVSS: YES	
SERVICE: 208/120V,3p,4W			* = GFCI CIRCUIT BREAKER	TRIM: SURFACE	
CKT	C/B	LOAD	LOAD	C/B	CKT
1	20/1	LCP-2	PUMP ROOM LIGHTING	20/1	2
3	20/1	FIT-270	ELEC ROOM LIGHTING	20/1	4
5	30/3	SGEN-2	OUTDOOR LIGHTING	20/1	6
7	–	–	PUMP ROOM RECEPT	20/1	8
9	–	–	ELEC ROOM RECEPT	20/1	10
11	20/2	ACU-201	OUTDOOR RECEPT	20/1	12
13	–	–	RTU-C	20/1	14
15	30/2	EUH-202	RTU-D	20/1	16
17	–	–	SPARE	20/1	18
19	20/1	SPARE	SPARE	20/1	20
21	20/1	SPARE	SPARE	20/1	22
23	20/1	SPARE	SPARE	20/1	24
25	1P	SPACE	SPACE	1P	26
27	1P	SPACE	SPACE	1P	28
29	1P	SPACE	SPACE	1P	30

NO.	DATE	DESCRIPTION OF REVISION
0	11-15-07	INITIAL ISSUE

ful028E004.dwg 11.26.07

JORDAN JONES & GOULDING

BOARD OF COMMISSIONERS
FULTON COUNTY, GEORGIA

GEORGIA REGISTERED PROFESSIONAL ENGINEER THOMAS H. MIDDLEBROOKS 11/26/07

W027 NORTH FULTON WATER SYSTEM IMPROVEMENTS

LIGHTING FIXTURE SCHEDULE
AND PANELBOARD SCHEDULES

DESIGNED: MAS	CHECKED:	DATE: NOVEMBER 2007	E0.4	0
DRAWN: MAS	JOB NO. 02016028	SCALE: NONE	SHEET	REV

THIS LINE ____ IS ONE INCH LONG WHEN PLOTTED FULL SCALE

JJONES

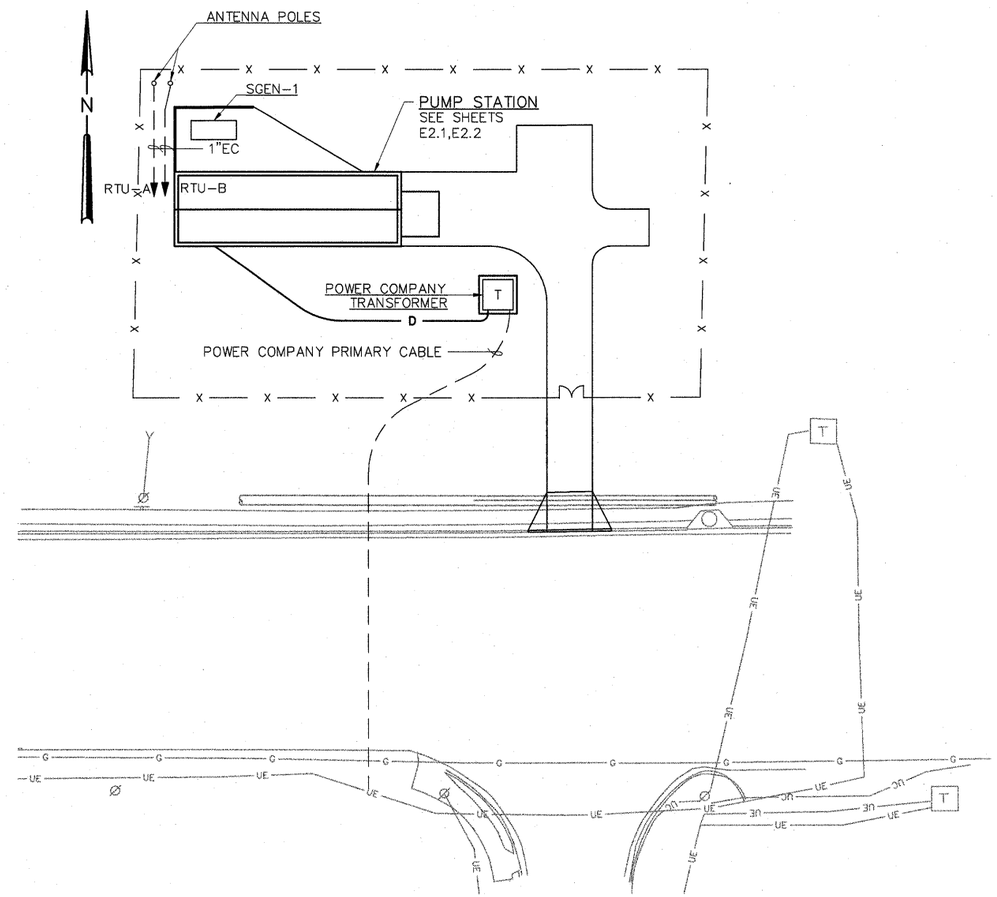

NO.	DATE	DESCRIPTION OF REVISION
1	01-02-08	UPDATED ROUTING OF UNDERGROUND PRIMARY ELECTRIC SERVICE
0	11-15-07	INITIAL ISSUE

ful028E101.dwg 01.02.08

JORDAN JONES & GOULDING

BOARD OF COMMISSIONERS
FULTON COUNTY, GEORGIA

GEORGIA REGISTERED PROFESSIONAL ENGINEER RHOMAY H. MIDDLEBROOKS

W027 NORTH FULTON WATER SYSTEM IMPROVEMENTS

MANSELL ROAD BOOSTER PUMP STATION
SITE PLAN

DESIGNED: MAS	CHECKED:	DATE: NOVEMBER 2007	E1.1	1
DRAWN: MAS	JOB NO. 02016028	SCALE: 1" = 20'-0"	SHEET	REV

THIS LINE IS ONE INCH LONG WHEN PLOTTED FULL SCALE

MSMITH

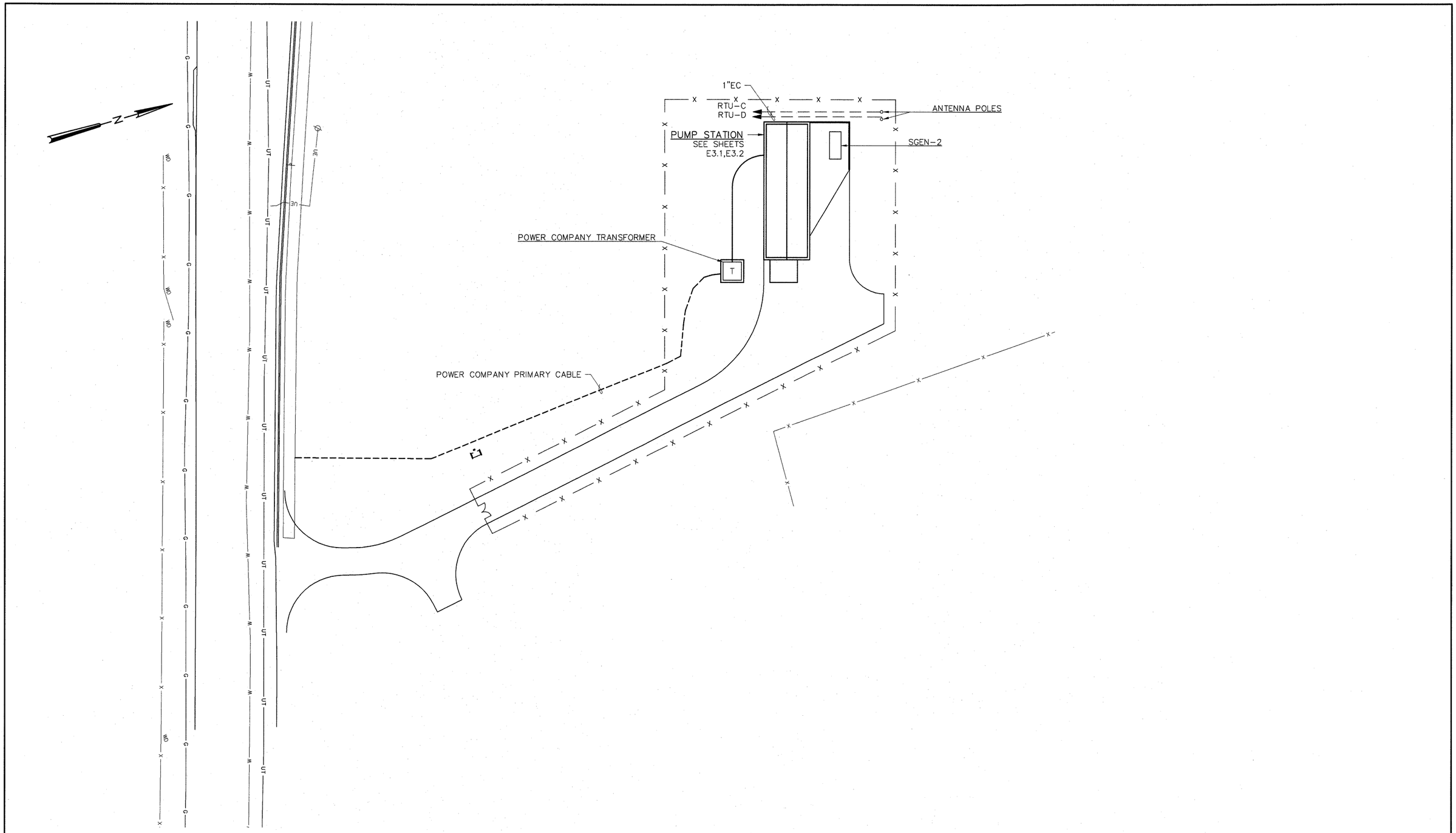

NO.	DATE	DESCRIPTION OF REVISION
0	11-15-07	INITIAL ISSUE

ful028E102.dwg 11.26.07

JORDAN JONES & GOULDING

BOARD OF COMMISSIONERS
FULTON COUNTY, GEORGIA

GEORGIA REGISTERED PROFESSIONAL ENGINEER 11/26/07 THOMAS H. MIDDLEBROOKS

W027 NORTH FULTON WATER SYSTEM IMPROVEMENTS

PROVIDENCE ROAD BOOSTER PUMP STATION
SITE PLAN

DESIGNED: MAS	CHECKED:	DATE: NOVEMBER 2007	E1.2	0
DRAWN: MAS	JOB NO. 02016028	SCALE: 1" = 20'-0"	SHEET	REV

THIS LINE IS ONE INCH LONG WHEN PLOTTED FULL SCALE

MSMITH

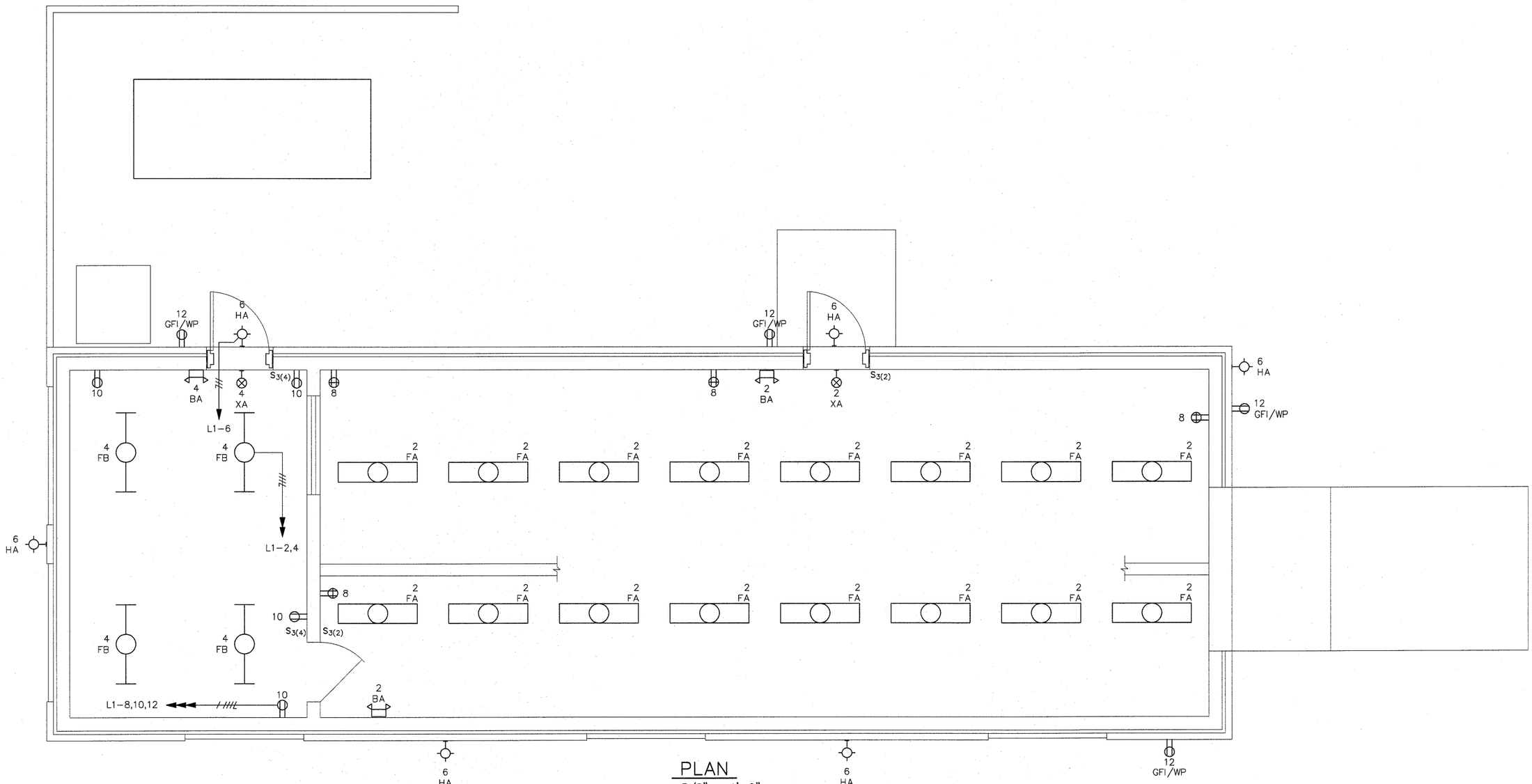

PLAN
3/8" = 1'-0"

0	11-15-07	INITIAL ISSUE		
NO.	DATE	DESCRIPTION OF REVISION		

ful028EA01.dwg 11.26.07

JORDAN JONES & GOULDING

BOARD OF COMMISSIONERS
FULTON COUNTY, GEORGIA

GEORGIA REGISTERED PROFESSIONAL ENGINEER 11/26/07 THOMAS H. MIDDLEBROOKS

W027 NORTH FULTON WATER SYSTEM IMPROVEMENTS

MANSELL ROAD BOOSTER PUMP STATION
LIGHTING AND RECEPTACLES PLAN

DESIGNED: MAS	CHECKED:	DATE: NOVEMBER 2007	E2.1	0
DRAWN: MAS	JOB NO. 02016028	SCALE: AS SHOWN	SHEET	REV

THIS LINE IS ONE INCH LONG WHEN PLOTTED FULL SCALE

MSMITH

NOTES:

1. PROVIDE N.O. INTERLOCK FOR DRIVE SHUT DOWN
2. PROVIDE FUSES PER MANUFACTURER'S REQUIREMENTS
3. SEE ONE-LINE DIAGRAMS FOR ADDITIONAL CONDUCTOR AND CONDUIT REQUIREMENTS

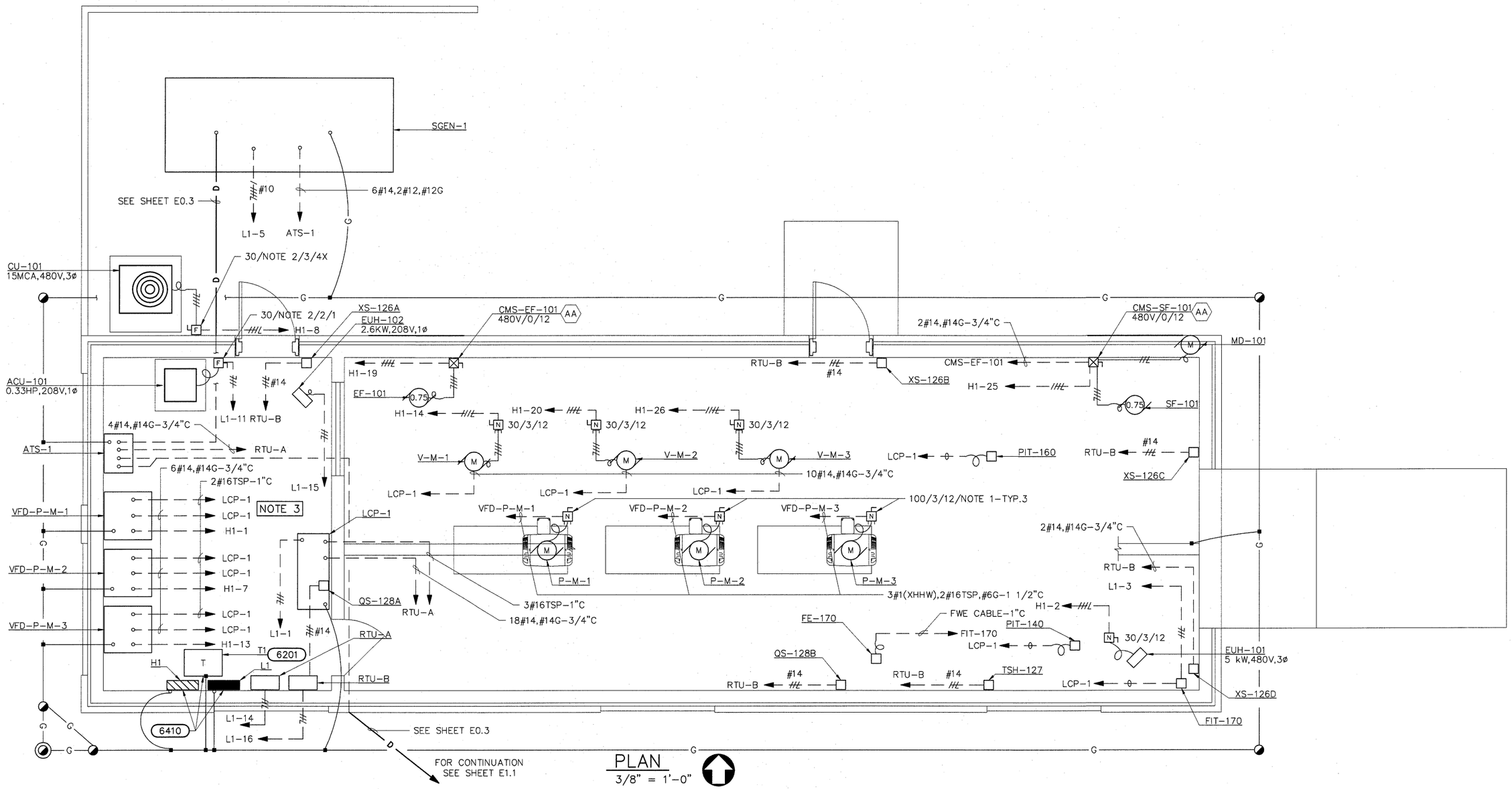

PLAN
3/8" = 1'-0"

NO.	DATE	DESCRIPTION OF REVISION
0	11-15-07	INITIAL ISSUE

ful028EA02.dwg 11.26.07

JORDAN JONES & GOULDING

BOARD OF COMMISSIONERS
FULTON COUNTY, GEORGIA

GEORGIA REGISTERED PROFESSIONAL ENGINEER THOMAS H. MIDDLEBROOKS 11/26/07

W027 NORTH FULTON WATER SYSTEM IMPROVEMENTS

MANSELL ROAD BOOSTER PUMP STATION
POWER AND SYSTEMS PLAN

DESIGNED: MAS	CHECKED:	DATE: NOVEMBER 2007	E2.2	0
DRAWN: MAS	JOB NO. 02016028	SCALE: AS SHOWN	SHEET	REV

THIS LINE IS ONE INCH LONG WHEN PLOTTED FULL SCALE

MSMITH

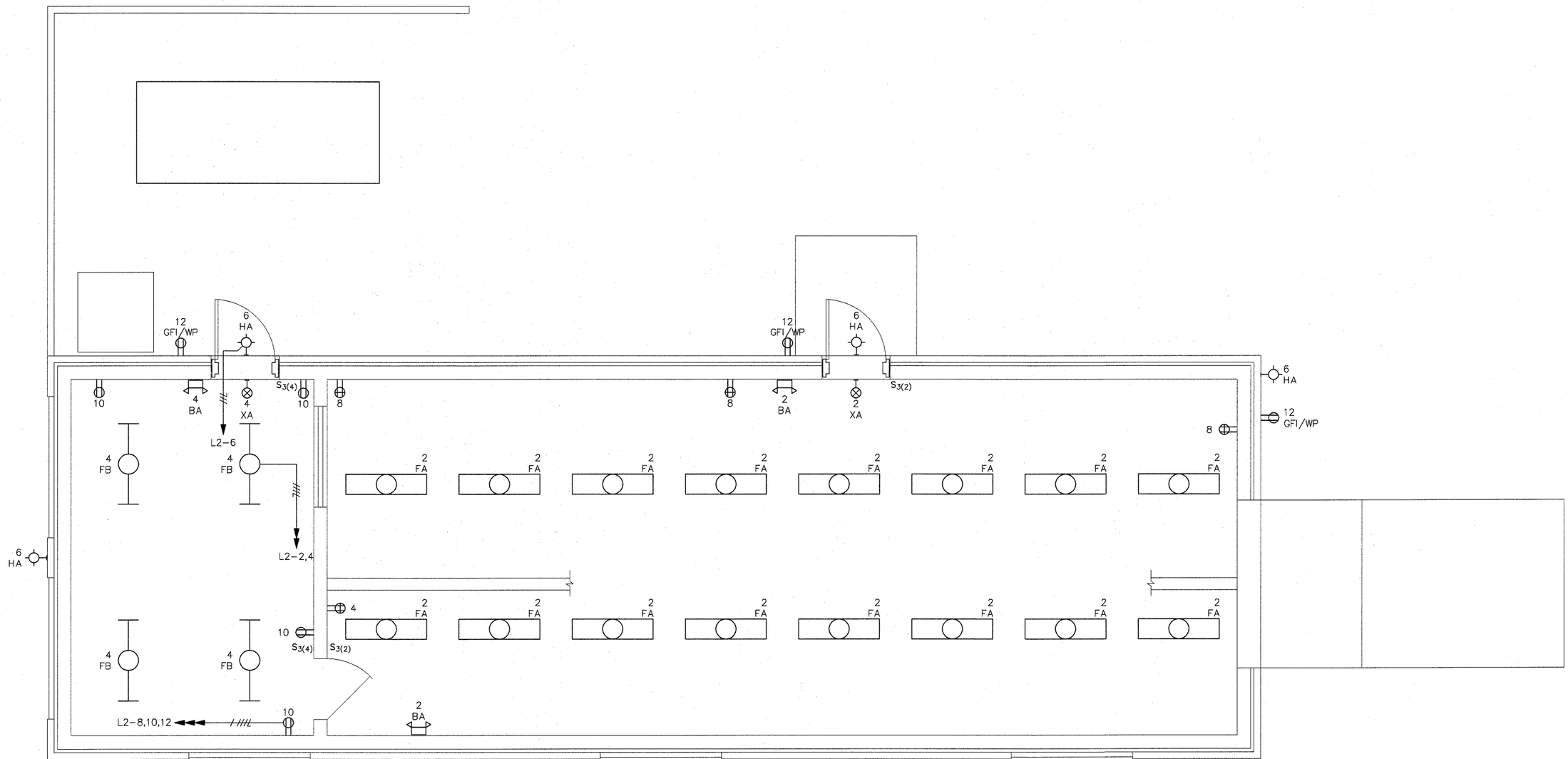

PLAN
3/8" = 1'-0"

0	11-15-07	INITIAL ISSUE		
NO.	DATE	DESCRIPTION OF REVISION		

ful028EB01.dwg 11.26.07

JORDAN JONES & GOULDING

BOARD OF COMMISSIONERS
FULTON COUNTY, GEORGIA

GEORGIA REGISTERED PROFESSIONAL ENGINEER No. 18032 11/26/07 THOMAS H. MIDDLEBROOKS

W027 NORTH FULTON WATER SYSTEM IMPROVEMENTS

PROVIDENCE ROAD BOOSTER PUMP STATION
LIGHTING AND RECEPTACLES PLAN

DESIGNED: MAS	CHECKED:	DATE: NOVEMBER 2007	E3.1	0
DRAWN: MAS	JOB NO. 02016028	SCALE: AS SHOWN	SHEET	REV

THIS LINE IS ONE INCH LONG WHEN PLOTTED FULL SCALE

MSMITH

NOTES:

1. PROVIDE N.O. INTERLOCK FOR DRIVE SHUT DOWN
2. FUSE PER MANUFACTURER'S REQUIREMENTS
3. SEE ONE-LINE DIAGRAM FOR ADDITIONAL CONDUCTOR AND CONDUIT REQUIREMENTS

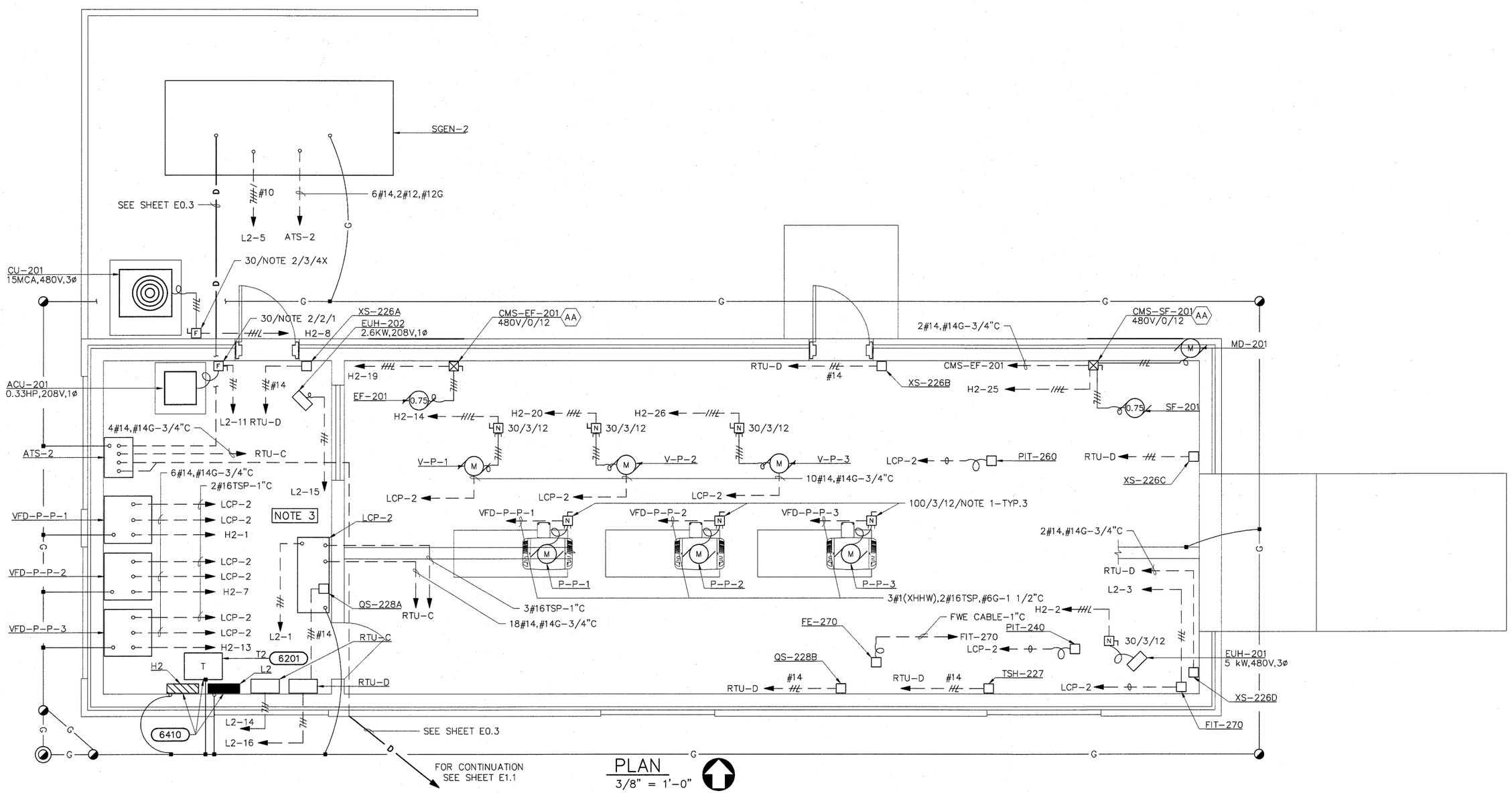

PLAN
3/8" = 1'-0"

NO.	DATE	DESCRIPTION OF REVISION
0	11-15-07	INITIAL ISSUE

ful028EB02.dwg 11.26.07

JORDAN JONES & GOULDING

BOARD OF COMMISSIONERS
FULTON COUNTY, GEORGIA

GEORGIA REGISTERED PROFESSIONAL ENGINEER THOMAS H. MIDDLEBROOKS 11/26/07

W027 NORTH FULTON WATER SYSTEM IMPROVEMENTS

PROVIDENCE ROAD BOOSTER PUMP STATION
POWER AND SYSTEMS PLAN

DESIGNED: MAS	CHECKED:	DATE: NOVEMBER 2007	E3.2	0
DRAWN: MAS	JOB NO. 02016028	SCALE: AS SHOWN	SHEET	REV

THIS LINE IS ONE INCH LONG WHEN PLOTTED FULL SCALE

MSMITH

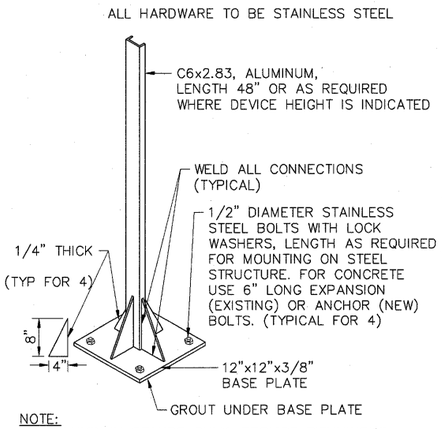

NOTE:
FOR ALUMINUM STANDS ONLY, PROVIDE BITUMINOUS PROTECTIVE COATING WHERE STAND COMES IN CONTACT WITH CONCRETE.

SINGLE SUPPORT STAND
N.T.S.

6001

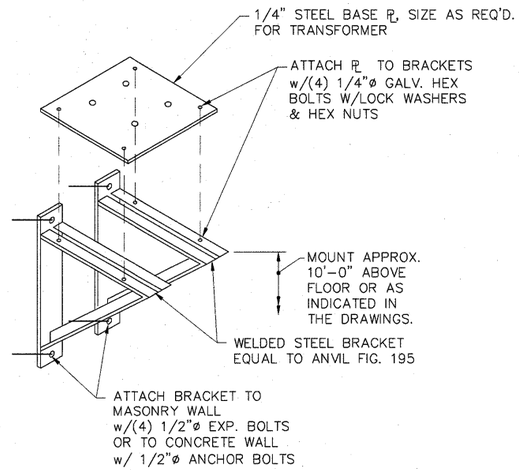

NOTE: HOT DIP GALV. ENTIRE ASSEMBLY AFTER FABRICATION.

TRANSFORMER WALL BRACKET
N.T.S.

6201

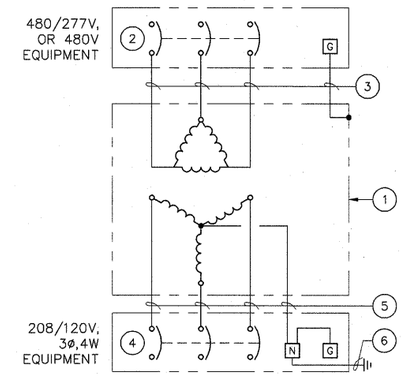

USE THE FOLLOWING FOR 480-208Y/120 VOLT TRANSFORMER RATING UNLESS OTHERWISE INDICATED. FOR OTHER VOLTAGE RATINGS SEE PLANS OR CONDUCTOR SCHEDULE FOR PRIMARY AND SECONDARY CONDUCTORS AND NEC TABLE 250-66 FOR BONDING JUMPER.

1 kVA	2 PRIMARY CIRCUIT BREAKER	3 PRIMARY CONDUCTORS	4 SECONDARY CIRCUIT BREAKER	5 SECONDARY CONDUCTORS	6 BONDING JUMPER
9	20	3#12,#12G-3/4"C	30	4#10,#10G-3/4"C	#8
15	30	3#10,#10G-3/4"C	50	4#6,#10G-1 1/4"C	#8
30	50	3#6,#6G-1"C	100	4#1,#8G-2"C	#6
45	80	3#3,#8G-1 1/4"C	150	4#1/0,#6G-2"C	#6
50	90	3#2,#8G-1 1/4"C	175	4#2/0,#6G-2"C	#4
75	125	3#1,#6G-1 1/2"C	250	4-250kcmil,#4G-3"C	#2
112.5	200	3#3/0,#6G-2"C	400	2x4#3/0,#3G-2 1/2"C	#1/0

TRANSFORMER GROUNDING SCHEMATIC
N.T.S.

6410

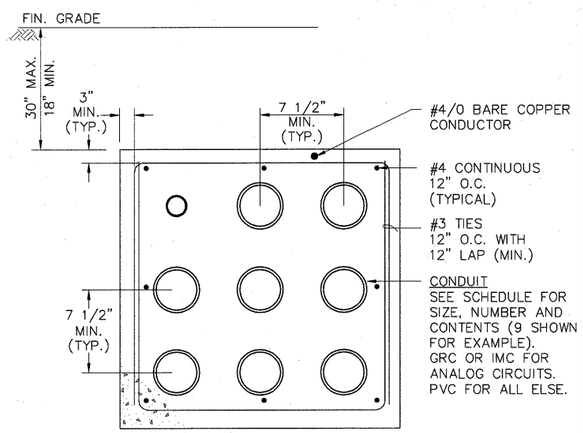

NOTES:

1. FOR LARGER DUCTBANKS CONTINUE PATTERN OF REBAR, CONDUIT SEPARATION AND CONCRETE COVER.

TYPICAL DUCTBANK
N.T.S.

6131

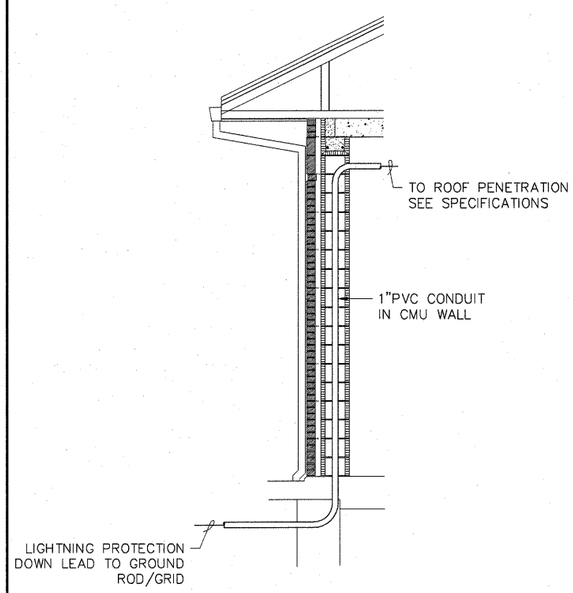

LIGHTNING PROTECTION SYSTEM DOWN LEAD INSTALLATION
N.T.S.

6412

NO.	DATE	DESCRIPTION OF REVISION
0	11-15-07	INITIAL ISSUE

ful028EZ01.dwg 11.26.07

JORDAN JONES & GOULDING

BOARD OF COMMISSIONERS
FULTON COUNTY, GEORGIA

GEORGIA REGISTERED PROFESSIONAL ENGINEER No. 11992 THOMAS H. MIDDLEBROOKS 11/26/07

W027 NORTH FULTON WATER SYSTEM IMPROVEMENTS

STANDARD DETAILS

DESIGNED: MAS	CHECKED:	DATE: NOVEMBER 2007	E99.1	0
DRAWN: MAS	JOB NO. 02016028	SCALE: NONE	SHEET	REV

THIS LINE IS ONE INCH LONG WHEN PLOTTED FULL SCALE

MSMITH

PIPING AND VALVE SYMBOLS

- GATE VALVE
- GLOBE VALVE
- BALL VALVE
- BALL VALVE (TRUE UNION)
- CHECK VALVE
- TWIN DISC CHECK VALVE
- CUSHIONED SWING CHECK VALVE
- BUTTERFLY VALVE
- PLUG VALVE
- CONE VALVE
- DIAPHRAGM
- ANGLE VALVE
- THREE WAY VALVE
- PRESSURE REDUCING VALVE
- BACKFLOW PREVENTER
- SOLENOID OPERATED VALVE
- BACK PRESSURE VALVE
- PRESSURE RELIEF OR SAFETY VALVE
- AIR RELEASE VALVE
- KNIFE GATE VALVE
- NEEDLE VALVE
- ROTARY VALVE
- FOOT VALVE
- POST INDICATING VALVE
- PINCH VALVE
- DIAPHRAM WEIR VALVE
- PNEUMATIC DIAPHRAGM OPERATED VALVE
- HYDRAULIC DIAPHRAGM OPERATED VALVE
- ELECTRIC MOTOR OPERATED VALVE
- FLOAT VALVE
- PRESSURE CONTROL VALVE (PCV)
- TEMPERATURE CONTROL VALVE (TCV)
- AUTOMATIC AIR VENT (AAV)
- MANUAL AIR VENT (MAV)
- THERMOWELL
- WEIR GATE (WG)
- SLIDE GATE (SG)
- SLUICE GATE (SLG)
- TELESCOPING VALVE (TV)
- STEAM TRAP
- MANUAL VOLUME DAMPER
- ACTUATED VOLUME DAMPER
- FLEXIBLE CONNECTION
- EXPANSION JOINT
- PIPE GUIDE
- PIPE ANCHOR
- REDUCER
- UNION
- WYE STRAINER
- BASKET STRAINER
- COUPLING (TRANSITION)
- QUICK COUPLING
- CALIBRATION CHAMBER
- WATER HAMMER ARRESTOR
- ROTAMETER
- PULSATION DAMPER
- EDUCTOR
- INJECTOR
- STATIC METER
- MIXER
- V-NOTCH WEIR
- DRAIN
- DIAPHRAGM OR LOAD CELL
- AIR SET
- INSERTION INSTRUMENT
- AUTOMATIC CONDENSATE TRAP
- PRESS/VAC RELIEF VALVE W/O FLAME ARRESTOR
- PRESS/VAC RELIEF WITH FLAME ARRESTOR
- FLAME ARRESTOR WITH COVER
- FLAME ARRESTER
- SPACE HEATER/HEAT TRACING
- ELECTRIC MOTOR
- CAP
- RUPTURE DISK (ON PRESSURE)
- RUPTURE DISK (ON VACUUM)
- FLEXIBLE HOSE WITH QUICK COUPLINGS
- FLANGES
- PRESSURE INSTRUMENT PROTECTOR
- PARTICULATE FILTER
- DESSICANT DRYER
- SEPARATOR
- BASKET STRAINER
- BUBBLER SYSTEM
- OPEN CHANNEL OR OPENINGS BETWEEN TANKS (NON-PIPED FLOW)
- PRESSURE RELIEF AND FLAME TRAP

PUMP SYMBOLS

- CENTRIFUGAL PUMP (SHOWN WITH MOTOR)
- SPLIT CASE PUMP (SHOWN WITH MOTOR)
- GEAR PUMP (SHOWH WITH MOTOR)
- SUBMERSIBLE OR SUMP PUMP (SHOWN WITH MOTOR)
- METERING PUMP (SHOWN WITH MOTOR)
- PROGRESSIVE CAVITY PUMP (SHOWN WITH MOTOR)
- DIAPHRAGM PUMP (SHOWN WITH MOTOR)
- VERTICAL TURBINE PUMP (SHOWN WITH MOTOR)
- ROTARY LOBE PUMP (SHOWN WITH MOTOR)
- PISTON PUMP
- ROTOR PUMP
- HOSE PUMP

BLOWER/COMPRESSOR SYMBOLS

- CENTRIFUGAL BLOWER OR COMPRESSOR (SHOWN WITH MOTOR)
- PD BLOWER OR COMPRESSOR (SHOWN WITH MOTOR)

FLOW ELEMENT SYMBOLS

- VORTEX FLOW METER
- CORIOLIS FLOW METER
- PROPELLER FLOW METER
- ORIFICE PLATE
- PARSHALL FLUME
- MAGNETIC FLOW METER
- FLOW TUBE (VENTURI)
- DISC FLOW METER

AGITATOR SYMBOLS

- RADIAL
- PROPELLER
- TURBINE

EQUIPMENT SYMBOLS

NEW EQUIPMENT — EXISTING EQUIPMENT

LINE SYMBOLS

- PRIMARY PROCESS LINE
- SECONDARY PROCESS LINE
- EXISTING
- EXISTING TO BE REMOVED
- EXISTING TO BE ABANDONED
- FUTURE
- HYDRAULIC
- SHEET — LINE ONE / LINE TWO — SHEET CONTINUATION
- XX — CONTINUATION ELSEWHERE, SAME SHEET

EQUIPMENT/UNIT IDENTIFICATION

SYS-UD-UN

- UNIT NUMBER
- UNIT DESIGNATION (EQUIP. TYPE)
- SYSTEM IDENTIFICATION

PIPE LINE IDENTIFICATION

DT-SSSS-MOC

- MATERIAL OF CONSTRUCTION
- SERVICE IDENTIFICATION
- NOMINAL PIPE DIAMETER

HEAT TRACING IDENTIFICATION

HT-X-X

ABBREVIATIONS

SYSTEM, PROCESS & SERVICE

AC	AIR COMPRESSOR
AL	ALUM
AMM	AMMONIA
B	BURNER
BL	BLOWER
BLR	BOILER
BM	BATCH METER
BRH	BLOWDOWN HEAT RECOVERY
BSN	BASIN
BT	BULK TANK
BW	BACKWASH
BWR	BACKWASH RETURN
BWS	BACKWASH SUPPLY
BYP	BYPASS
C	CARBON
CAB	CABINET
CAM	CAMERA
CAUS	CAUSTIC
CB	CORE BLOW
CD	CONDENSATE
CH	CONVERGING HOPPER
CHEM	CHEMICAL
CHWR	COOLING WATER RETURN
CHWS	COOLING WATER SUPPLY
CL	CHLORINE
CLA	CHEMICAL LOAD AREA
CLAR	CLARIFIER
CLAS	CLASSIFIER
CLDX	CHLORINE DIOXIDE
CLS	CHLORINE SOLUTION
CLTR	CHLORINATOR
COAG	COAGULANT
COMP	COMPOST
CONC	CONCRETE
CONV	CONVEYOR
CORH	CORROSION INHIBITER
CRN	CRANE
CSCR	CHLORINE SCRUBBER
DR	DRAIN
DC	DUST COLLECTOR
DCNT	DECANT
DET	DETECTOR
DRV	DRIVE
DRY	DRYER
DT	DAY TANK
ED	EDUCTOR
EF	EXHAUST FAN
EFF	EFFLUENT
EJ	EJECTOR
ELSG	ELECTRIC SLUICE GATE
EMV	ELECTRIC MOTOR OPERATED VALVE
EQ	EQUALIZATION
EV	ELECTRICALLY OPERATED VALVE
FAID	FILTER AID
FC	FAILED CLOSED
FDR	FEEDER
FE	FILTER EFFLUENT
FECL	FERRIC CHLORIDE
FI	FILTER INFLUENT
FIL(X)	FILTER
FIN	FINAL
FL	FLUORIDE
FLAD	FLOCCULATION AID
FLOC	FLOCCULATION
FMX	FLASH MIX
FO	FAILED OPEN
FOR	FUEL OIL RETURN
FOS	FUEL OIL SUPPLY
FOT	FUEL OIL TANK
FP	FILTER PRESS
FT	FILTRATE
FW	FINISHED WATER
FWMV	FINISHED WATER METER VAULT
HG	HAND GATE
HPS	HIGH PRESSURE STEAM
HPW	HIGH PRESSURE WATER
HSG	HYDRAULIC SLUICE GATE
HSPS	HIGH SERVICE PUMP STATION
HST	HOIST
HT	HEAT TRACE
HV	HYDRAULIC VALVE
HWR	HEATED WATER RETURN
HWS	HEATED WATER SUPPLY
IA	INSTRUMENT AIR
INF	INFLUENT
INT	INTERMEDIATE
INS	INSULATE
LA	LAND APPLICATION
LGN	LAGOON
LI	LIME
LPG	LP GAS
LPS	LOW PRESSURE STEAM
LPY	LIQUID POLYMER
LS	LIME SLURRY
ME	MECHANICAL EQUIPMENT
MECH	MECHANISM
MO	MOTOR OPERATED VALVE
MP	METERING PUMP
MX	MIXER
NC	NORMALLY CLOSED
NEU	NEUTRALIZATION
NG	NATURAL GAS
NO	NORMALLY OPEN
NOZ	NOZZLE
NPW	NON-POTABLE WATER
NPY	NEAT POLYMER
NU	NUTRIENT
O/W	OIL WATER SEPARATOR
OF	OVERFLOW

SYSTEM, PROCESS & SERVICE (CONT.)

P	PUMP
PA	PLANT AIR
PAC	POWDER ACTIVATED CARBON
PBU	POWER BACKUP
PD	PROCESS DRAIN
PE	PROCESS EQUIPMENT
PF	PARSHALL FLUME
PG	PIPE GALLERY
PHOS	PHOSPHATE
PNL	PANEL
POA	PHOSPHORIC ACID
POT	POTASSIUM PERMANGANATE
PW	POTABLE WATER
PY	POLYMER
REC	RECYCLE
REW	REWASH
RM	ROTAMETER
RO	RECOVERED OIL
RP	RECIRCULATING PUMP
RW	RAW WATER
RWPS	RAW WATER PUMP STATION
SA	SULFURIC ACID
SAM	SAMPLE
SAMP	SAMPLER
SBS	SODIUM BISULFITE
SC	STREAMING CURRENT
SCLE	SCALE
SCLR	SODIUM CHLORITE
SCR	SCRUBBER
SCRN	SCREEN
SD	STORM DRAIN
SED	SEDIMENTATION
SEP	SEPARATOR
SEQ	SEQUESTERING AGENT
SET	SETTLING
SF	SUPPLY FAN
SG	SLIDE GATE
SH	SODIUM HYDROXIDE
SHCLR	SODIUM HYPOCHLORITE
SHT	SLUDGE HOLDING TANK
SL	SLUDGE
SLG	SLUICE GATE
SMP	SUMP
SMX	STATIC MIXER
SOLN	SOLUTION
SP	SCREENINGS PRESS
SPL	SPLITTER BOX
SS	SANITARY SEWER
STG	STAGE
STRN	STRAINER
SW	SETTLED WATER
SYS	SYSTEM
T	TANK
TCV	TEMPERATURE CONTROL VALVE
THK	THICKENER
TS	THICKENED SLUDGE
TW	TREATED WATER
UD	UNDERDRAIN
UW	UTILITY WATER
V	VALVE
VACR	VACUUM REGULATOR
VAS	VACUUM AUTO SWITCHOVER
VCP	VALVE CONTROL PANEL
VNT	VENT
VIB	VIBRATION
VTX	VORTEX
WAT	WATER
WG	WEIR GATE
WNH	WINCH
WS	WASTE SLUDGE
WW	WASHWATER

MATERIAL OF CONSTRUCTION

BSP	BLACK STEEL PIPE
CISP	CAST IRON SOIL PIPE
CPVC	CHLORINATED POLYVINYL CHLORIDE
CSP	CARBON STEEL (SEAMLESS)
CU	COPPER
DIP	DUCTILE IRON PIPE
FRP	FIBERGLASS REINFORCED PLASTIC
FTB	FLEXIBLE TUBING
GS	GALVANIZED STEEL
PB	POLYBUTYLENE
PE	POLYETHYLENE
PP	POLYPROPYLENE
PVC	POLYVINYL CHLORIDE
RH	RUBBER HOSE
STL	STEEL PIPE (FABRICATED)
SSTL	STAINLESS STEEL

VALVE TYPES

BLV	BALL VALVE
BV	BUTTERFLY VALVE
CNV	CONE VALVE
CV	CHECK VALVE
DV	DIAPHRAGM VALVE
GV	GATE VALVE
GBV	GLOBE VALVE
KV	KNIFE VALVE
MV	MUD VALVE
NV	NEEDLE VALVE
PHV	PINCH VALVE
PV	PLUG VALVE
PRV	PRESSURE REDUCING VALVE
SV	SOLENOID VALVE

NOTES:

1. ALL DETAIL WIRING AND ELECTRICAL COMPONENTS ARE NOT SHOWN ON THE PROCESS AND INSTRUMENTATION DIAGRAM DRAWINGS. THE ELECTRICAL DRAWINGS ARE TO BE USED IN CONJUNCTION WITH THE PROCESS AND INSTRUMENTATION DIAGRAM DRAWINGS. THE PROCESS AND INSTRUMENTATION DIAGRAM DRAWINGS ARE PRESENTED AS A COORDINATING TOOL THAT INDICATES THE MAIN CONTROL LOGIC FOR THE PROJECT PROCESS SYSTEMS AND COMPONENTS. ACTUAL DETAIL LOGIC AND CONTROL COMPONENTS MAY DIFFER DEPENDING ON THE MANUFACTURER THAT IS AWARDED THE CONTRACT.
2. SEE CIVIL AND PROCESS DRAWINGS FOR PIPING DETAILS.
3. ALL INFORMATION ON THIS LEGEND MAY NOT BE USED.

GEORGIA REGISTERED No. 011516 PROFESSIONAL ENGINEER LOUIS A. HETTEL
28 NOV 07

NO.	DATE	DESCRIPTION OF REVISION
0	11-15-07	INITIAL ISSUE

ful028i01.dwg | 11.19.07

JORDAN JONES & GOULDING

BOARD OF COMMISSIONERS
FULTON COUNTY, GEORGIA

GEORGIA REGISTERED No. 011516 PROFESSIONAL ENGINEER THOMAS NELSON MILLER
11/19/07

W027 NORTH FULTON WATER SYSTEM IMPROVEMENTS

PROCESS AND INSTRUMENTATION DIAGRAM
PROCESS
LEGEND

DESIGNED: LAH	CHECKED: TNM	DATE: NOVEMBER 2007	I0.1	0
DRAWN: LAH	JOB NO. 02016028	SCALE: NONE	SHEET	REV

THIS LINE ____ IS ONE INCH LONG WHEN PLOTTED FULL SCALE

CGLOSTER

ELECTRICAL AND CONTROL SYMBOLS

- INDIVIDUAL STARTER OR CONTROLLER
- STARTER OR CONTROLLER IN MOTOR CONTROL CENTER
- STARTER OR CONTROLLER (FURNISHED WITH EQUIPMENT)
- GENERAL CONTROL PANEL OR EQUIPMENT, AS NOTED
- GENERAL CONTROL PANEL OR EQUIPMENT, AS NOTED (FURNISHED WITH EQUIPMENT)
- GENERAL INTERLOCK OR CONTROL FUNCTION (HARDWIRED)
- GENERAL INTERLOCK OR CONTROL FUNCTION (PLC OR SOFTWARE)
- INDICATING LIGHT
- ALARM LIGHT/ANNUNCIATOR
- T — TELEMETERED
- T — TELEPHONE
- ZC / M — MODULATING OR POSITIONING MOTOR (CONTROLLER FURNISHED WITH MOTOR)
- ZSO / ZSC — OPEN/CLOSE MOTOR (CONTROLLER FURNISHED WITH MOTOR)
- VFD — VARIABLE FREQUENCY DRIVE (AC)
- VSD — VARIABLE SPEED DRIVE (DC)
- AUDIBLE DEVICE
- CAMERA
- LEVEL ELEMENT (ULTRASONIC)

HAND SWITCH SYMBOLS AND LEGEND

- XXX/XXX — FIELD MOUNTED
- XXX/XXX — FRONT MCC MOUNTED
- XXX/XXX — REAR MCC MOUNTED
- XXX/XXX — FIELD MOUNTED (FURNISHED WITH EQUIPMENT)
- XXX/XXX — FRONT OF LOCAL PANEL MOUNTED (FURNISHED WITH EQUIPMENT)
- XXX/XXX — REAR OF PANEL MOUNTED (FURNISHED WITH EQUIPMENT)

AB	—	FUNCTION SELECTOR
EO	—	EMERGENCY OFF
ES	—	EMERGENCY STOP
FOR	—	FORWARD/OFF/REVERSE (MAINTAINED)
FSR	—	FORWARD/STOP/REVERSE (MAINTAINED)
HOA	—	HAND/OFF/AUTO
LOR	—	LOCAL/OFF/REMOTE
LR	—	LOCAL/REMOTE
MA	—	MANUAL/AUTO
OC	—	OPEN/CLOSE
OCA	—	OPEN/CLOSE/AUTO
OCR	—	OPEN/CLOSE/REMOTE
OO	—	ON/OFF
OS	—	OPERATION SWITCH
R	—	RESET
RS	—	RUN/STOP (AUTO RESET/RUN @ POWER INTERRUPTION)
RSJ	—	RUN/STOP/JOG
S	—	SILENCE
SR	—	SAFE/RUN
SS	—	START/STOP (MANUAL RESET @ POWER INTERRUPTION)
T	—	TEST
UD	—	UP/DOWN

ABBREVIATIONS

CP	CONTROL PANEL
FCP	FACTORY CONTROL PANEL
FWE	FURNISHED WITH EQUIPMENT
LCP	LOCAL CONTROL PANEL
MCC	MOTOR CONTROL CENTER
MCP	MAIN CONTROL PANEL
VIB	VIBRATION
VHC	VOLATILE HYDROCARBONS
TOR	TORQUE
DO	DISSOLVED OXYGEN
ORP	OXIDATION REDUCTION POTENTIAL
pH	HYDROGEN ION CONCENTRATION
SLBL	SLUDGE BLANKET LEVEL
TURB	TURBIDITY
COND	CONDUCTIVITY
PC	PARTICLE COUNT
PCS	PLANT CONTROL SYSTEM
SC	STREAMING CURRENT
FC	FAILED CLOSED
FO	FAILED OPEN

INSTRUMENT SYMBOLS AND DESIGNATIONS

- XXXX/WZZZQ — FIELD MOUNTED
- XXXX/WZZZQ — FRONT OF MAIN PANEL MOUNTED
- XXXX/WZZZQ — REAR OF MAIN PANEL MOUNTED
- XXX/XXX — FRONT OF LOCAL PANEL MOUNTED
- XXX/WZZZQ — REAR OF LOCAL PANEL MOUNTED
- XXXX/WZZZQ — FIELD MOUNTED (FURNISHED WITH EQUIPMENT)
- XXX/XXX — FRONT PANEL MOUNTED (FURNISHED WITH EQUIPMENT)
- XXX/WZZZQ — REAR PANEL MOUNTED (FURNISHED WITH EQUIPMENT)
- XXXX/WZZZQ — SOFTWARE DEVICE DISPLAYED (CRT)
- XXX/XXX — SOFTWARE DEVICE NOT DISPLAYED

INSTRUMENT IDENTIFICATION

XXXX/WZZZQ

- XXXX — FUNCTIONAL IDENTIFICATION
- W — MULTIPLE UNITS (A, B, ETC.)
- ZZ — SEQUENCE NUMBER
- XXXX — P&ID SHEET NUMBER
- ZZ, XXXX — LOOP NUMBER

INSTRUMENT SYMBOLS

- XXXX/WZZZQ — NEW INSTRUMENT
- XXXX — EXISTING INSTRUMENT

LINE SYMBOLS

- ELECTRICAL SIGNAL
- A — ANALOG ELECTRICAL SIGNAL
- D — DISCRETE ELECTRIC SIGNAL
- E — EXISTING WIRING
- F — WIRING (FURNISHED WITH EQUIPMENT)
- P — POWER OR EQUIPMENT CONNECTION
- ES 120/1 — ELECTRIC SUPPLY - VOLTAGE/PHASE
- SIGNAL LINES NOT CONNECTED
- SIGNAL LINES CONNECTED
- PNEUMATIC SIGNAL
- SOFTWARE OR DATA LINK

LETTERS FOR FUNCTIONAL IDENTIFICATION

	FIRST LETTER		SUCCEEDING LETTERS		
	MEASURED OR INITIATING VARIABLE	MODIFIER	READOUT OR PASSIVE FUNCTION	OUTPUT FUNCTION	MODIFIER
A	ANALYSIS		ALARM		
B	BURNER FLAME				
C	CONDUCTIVITY (ELECTRICAL)			CONTROL	
D	DENSITY (MASS) OR SPECIFIC GRAVITY	DIFFERENTIAL	DELAY		
E	VOLTAGE (EMF)		PRIMARY ELEMENT		
F	FLOW RATE	RATIO (FRACTION)			
G	GAGING		GLASS		
H	HAND (MANUALLY INITIATED)				HIGH
I	CURRENT (ELECTRICAL)		INDICATE		
J	POWER	SCAN			
K	TIME OR SCHEDULE			CONTROL STATION	
L	LEVEL		LIGHT (PILOT)		LOW
M	MOISTURE OR HUMIDITY	MOMENTARY			MIDDLE OR INTERMEDIATE
N	UNCLASSIFIED				
O	UNCLASSIFIED		ORIFICE (RESTRICTION)		
P	PRESSURE OR VACUUM		POINT (TEST CONNECTION)		
Q	QUANTITY OR EVENT	INTEGRATE OR TOTALIZE			
R	RADIOACTIVITY		RECORD OR PRINT		
S	SPEED OR FREQUENCY	SAFETY		SWITCH	
T	TEMPERATURE			TRANSMIT OR TRANSMITTER	
U	MULTIVARIABLE		MULTIFUNCTION	MULTIFUNCTION	MULTIFUNCTION
V	VIBRATION, MECHANICAL ANALYSIS			VALVE, DAMPER OR LOUVER	
W	WEIGHT OR FORCE		WELL		
X	UNCLASSIFIED			UNCLASSIFIED	
Y	UNCLASSIFIED			RELAY, COMPUTE OR CONVERT	
Z	POSITION			DRIVE, ACTUATE OR UNCLASSIFIED FINAL CONTROL ELEMENT	

NOTES:
1. ALL DETAIL WIRING AND ELECTRICAL COMPONENTS ARE NOT SHOWN ON THE PROCESS AND INSTRUMENTATION DIAGRAM DRAWINGS. THE ELECTRICAL DRAWINGS ARE TO BE USED IN CONJUNCTION WITH THE PROCESS AND INSTRUMENTATION DIAGRAM DRAWINGS. THE PROCESS AND INSTRUMENTATION DIAGRAM DRAWINGS ARE PRESENTED AS A COORDINATING TOOL THAT INDICATES THE MAIN CONTROL LOGIC FOR THE PROJECT PROCESS SYSTEMS AND COMPONENTS. ACTUAL DETAIL LOGIC AND CONTROL COMPONENTS MAY DIFFER DEPENDING ON THE MANUFACTURER THAT IS AWARDED THE CONTRACT.
2. SEE CIVIL AND PROCESS DRAWINGS FOR PIPING DETAILS.
3. ALL INFORMATION ON THIS LEGEND MAY NOT BE USED.

GEORGIA REGISTERED PROFESSIONAL ENGINEER No. 17280 LOUIS A. HETTEL
28 NOV 07

NO.	DATE	DESCRIPTION OF REVISION
0	11-15-07	INITIAL ISSUE

ful028i02.dwg 11.19.07

JORDAN JONES & GOULDING

BOARD OF COMMISSIONERS
FULTON COUNTY, GEORGIA

GEORGIA REGISTERED PROFESSIONAL ENGINEER No. 011516 THOMAS NELSON MILNER
11/19/07

W027 NORTH FULTON WATER SYSTEM IMPROVEMENTS

PROCESS AND INSTRUMENTATION DIAGRAM
INSTRUMENTATION
LEGEND

DESIGNED: LAH	CHECKED: TWM	DATE: NOVEMBER 2007	I0.2	0
DRAWN: LAH	JOB NO. 02016028	SCALE: NONE	SHEET	REV

THIS LINE IS ONE INCH LONG WHEN PLOTTED FULL SCALE

CGLOSTER

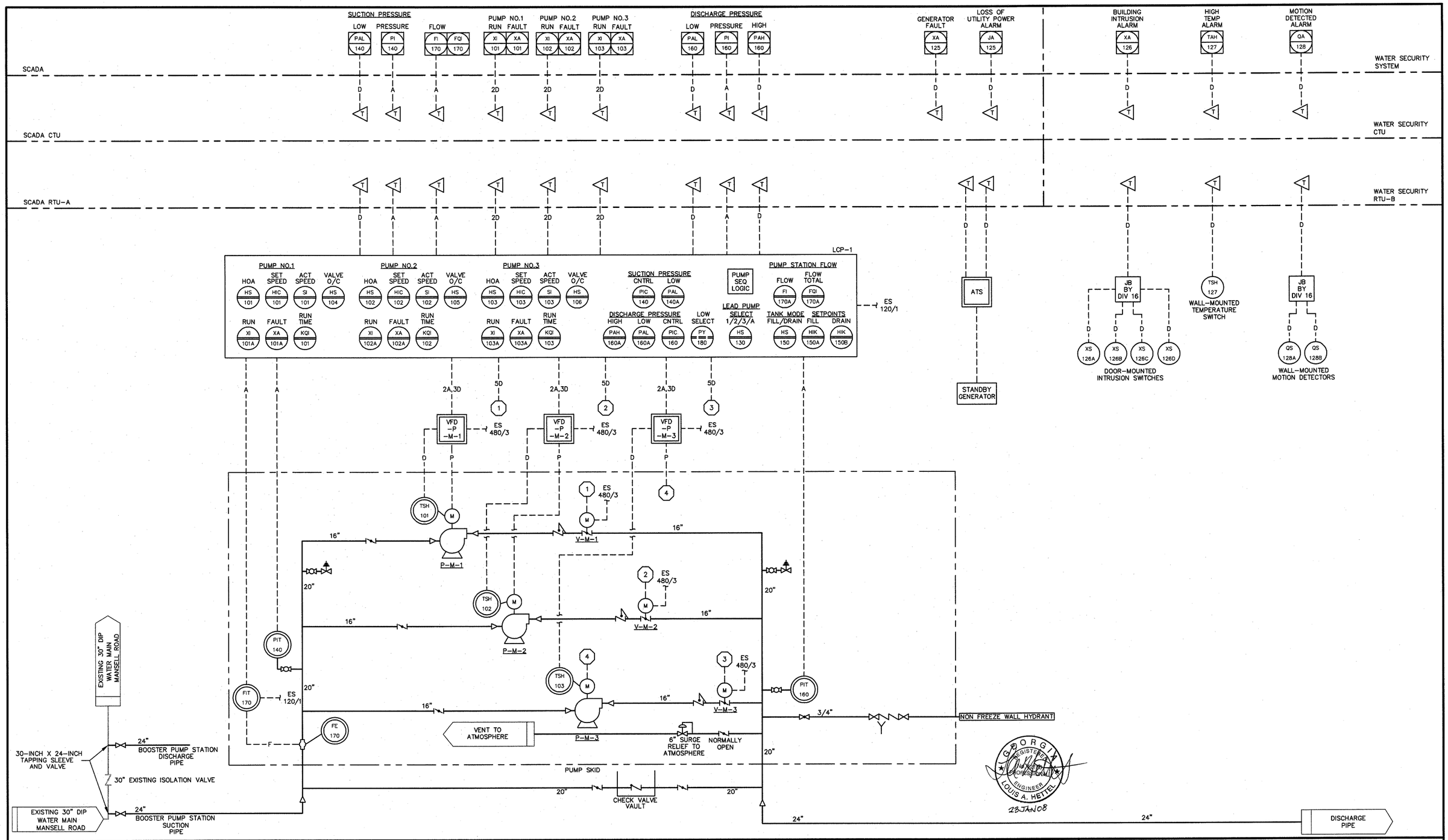

NO.	DATE	DESCRIPTION OF REVISION
0	11-15-07	INITIAL ISSUE

ful028IA03.dwg 01.22.08

JORDAN JONES & GOULDING

BOARD OF COMMISSIONERS
FULTON COUNTY, GEORGIA

GEORGIA REGISTERED No. 011516 PROFESSIONAL ENGINEER THOMAS NELSON MILLER
1/23/08

W027 NORTH FULTON WATER SYSTEM IMPROVEMENTS

PROCESS AND INSTRUMENTATION DIAGRAM
MANSELL ROAD
BOOSTER PUMP STATION

DESIGNED: LH/JP	CHECKED: TNM	DATE: NOVEMBER 2007	I0.3	0
DRAWN: LH/JP	JOB NO. 02016028	SCALE: NONE	SHEET	REV

THIS LINE IS ONE INCH LONG WHEN PLOTTED FULL SCALE

LTAYLOR

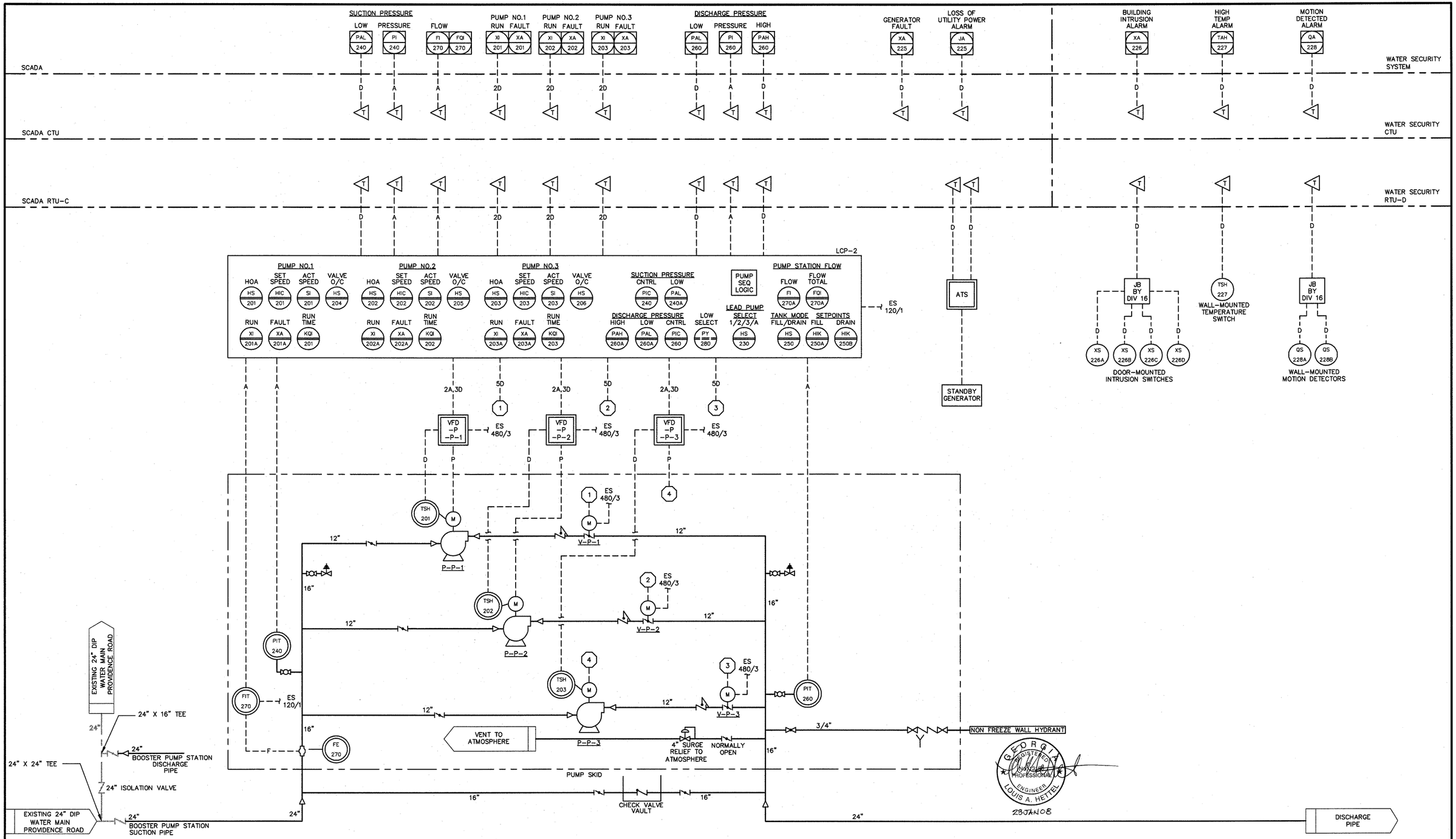

NO.	DATE	DESCRIPTION OF REVISION
0	11-15-07	INITIAL ISSUE

ful028IB04.dwg 01.22.08

JORDAN JONES & GOULDING

BOARD OF COMMISSIONERS
FULTON COUNTY, GEORGIA

GEORGIA REGISTERED No. 011516 PROFESSIONAL ENGINEER THOMAS NELSON MILLER
1/23/08

W027 NORTH FULTON WATER SYSTEM IMPROVEMENTS

PROCESS AND INSTRUMENTATION DIAGRAM
PROVIDENCE ROAD
BOOSTER PUMP STATION

DESIGNED: LH/JP	CHECKED: TNM / L	DATE: NOVEMBER 2007	I0.4	0
DRAWN: LH/JP	JOB NO. 02016028	SCALE: NONE	SHEET	REV

THIS LINE IS ONE INCH LONG WHEN PLOTTED FULL SCALE

LTAYLOR