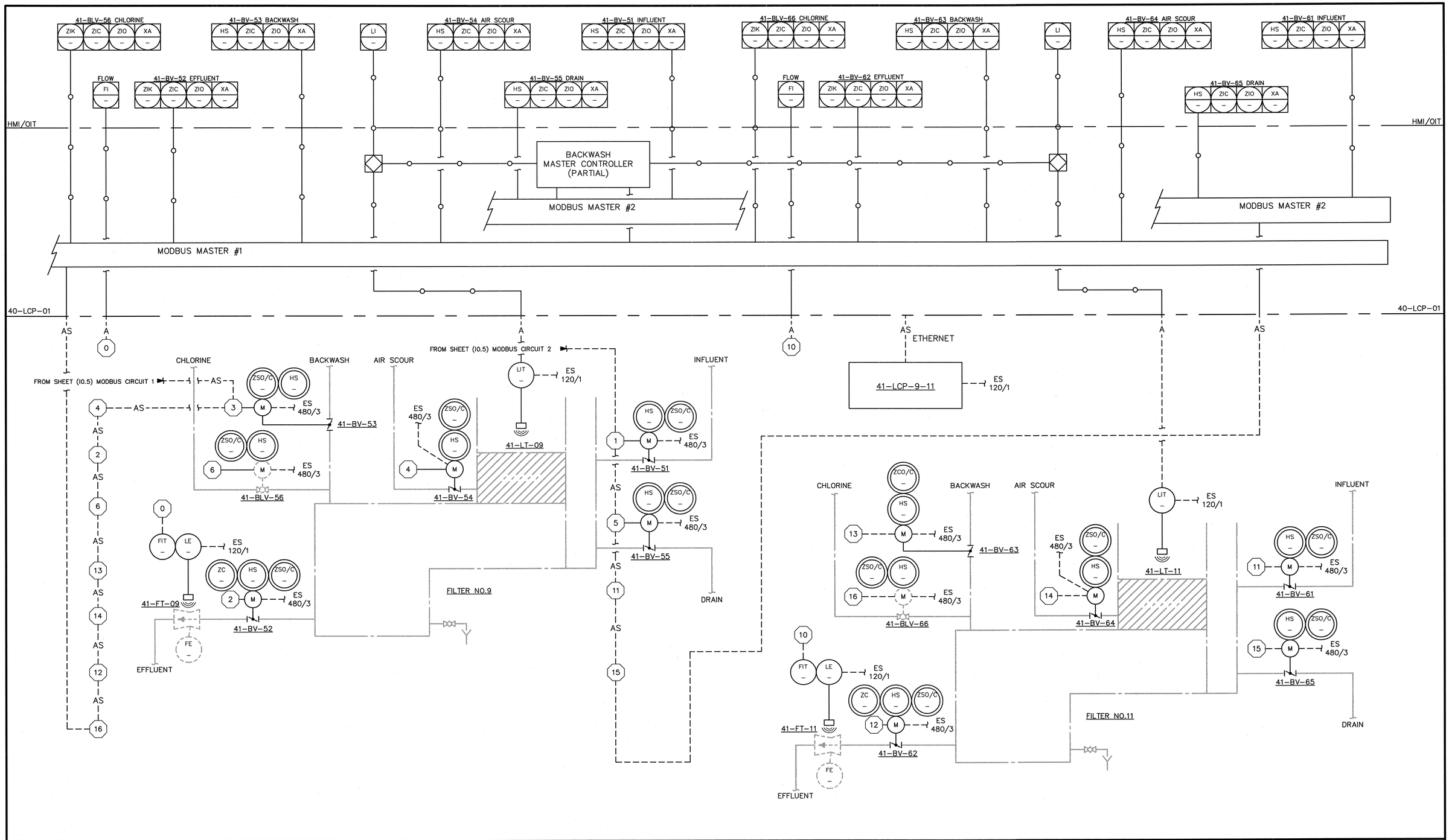

FU1029I007.dwg	02.22.08	0	02-22-08	INTIAL ISSUE
		NO.	DATE	DESCRIPTION OF REVISION

JORDAN JONES & GOULDING

FULTON COUNTY
BOARD OF COMMISSIONERS

GEORGIA REGISTERED PROFESSIONAL ENGINEER No. 22049 DONALD R. RICE

EFFLUENT FILTERS REHABILITATION
BIG CREEK WRF

PROCESS AND INSTRUMENTATION DIAGRAM
FILTER REHABILITATION
FILTERS NO.9 AND NO.11

DESIGNED: RV	CHECKED:	DATE: FEBRUARY 2008	I0.7	0
DRAWN: SM	JOB NO. 2016.029.86	SCALE: NTS	SHEET	REV

THIS LINE IS ONE INCH LONG WHEN PLOTTED FULL SCALE

DON.RICE

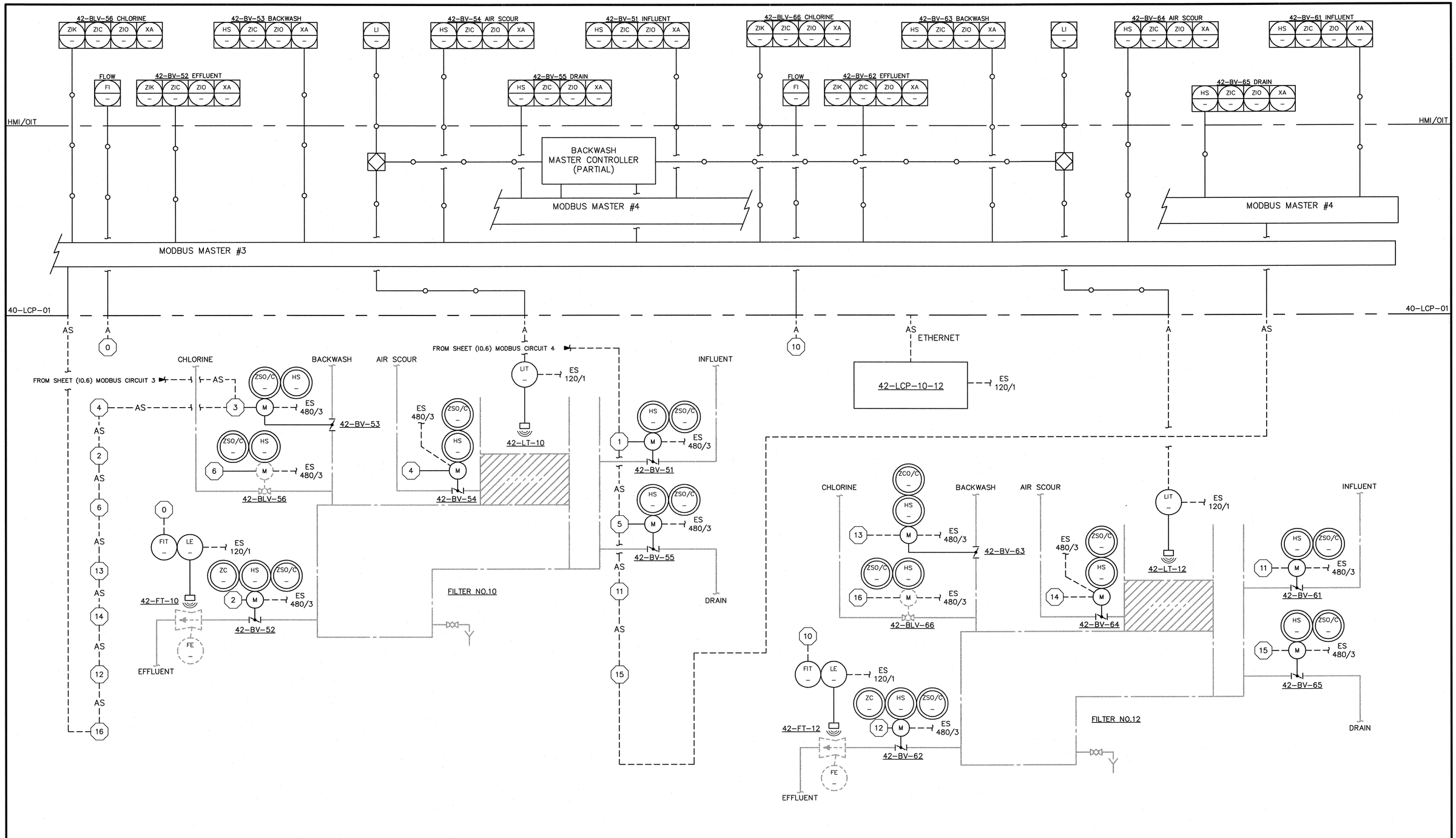

NO.	DATE	DESCRIPTION OF REVISION
0	02-22-08	INTIAL ISSUE

FU1029I008.dwg 02.22.08

JORDAN JONES & GOULDING

FULTON COUNTY
BOARD OF COMMISSIONERS

GEORGIA REGISTERED No. 22049 PROFESSIONAL ENGINEER DONALD R. RICE

EFFLUENT FILTERS REHABILITATION
BIG CREEK WRF

PROCESS AND INSTRUMENTATION DIAGRAM
FILTER REHABILITATION
FILTERS NO.10 AND NO.12

DESIGNED: RV	CHECKED:	DATE: FEBRUARY 2008	I0.8	0
DRAWN: SM	JOB NO. 2016.029.86	SCALE: NTS	SHEET	REV

THIS LINE IS ONE INCH LONG WHEN PLOTTED FULL SCALE

DON RICE

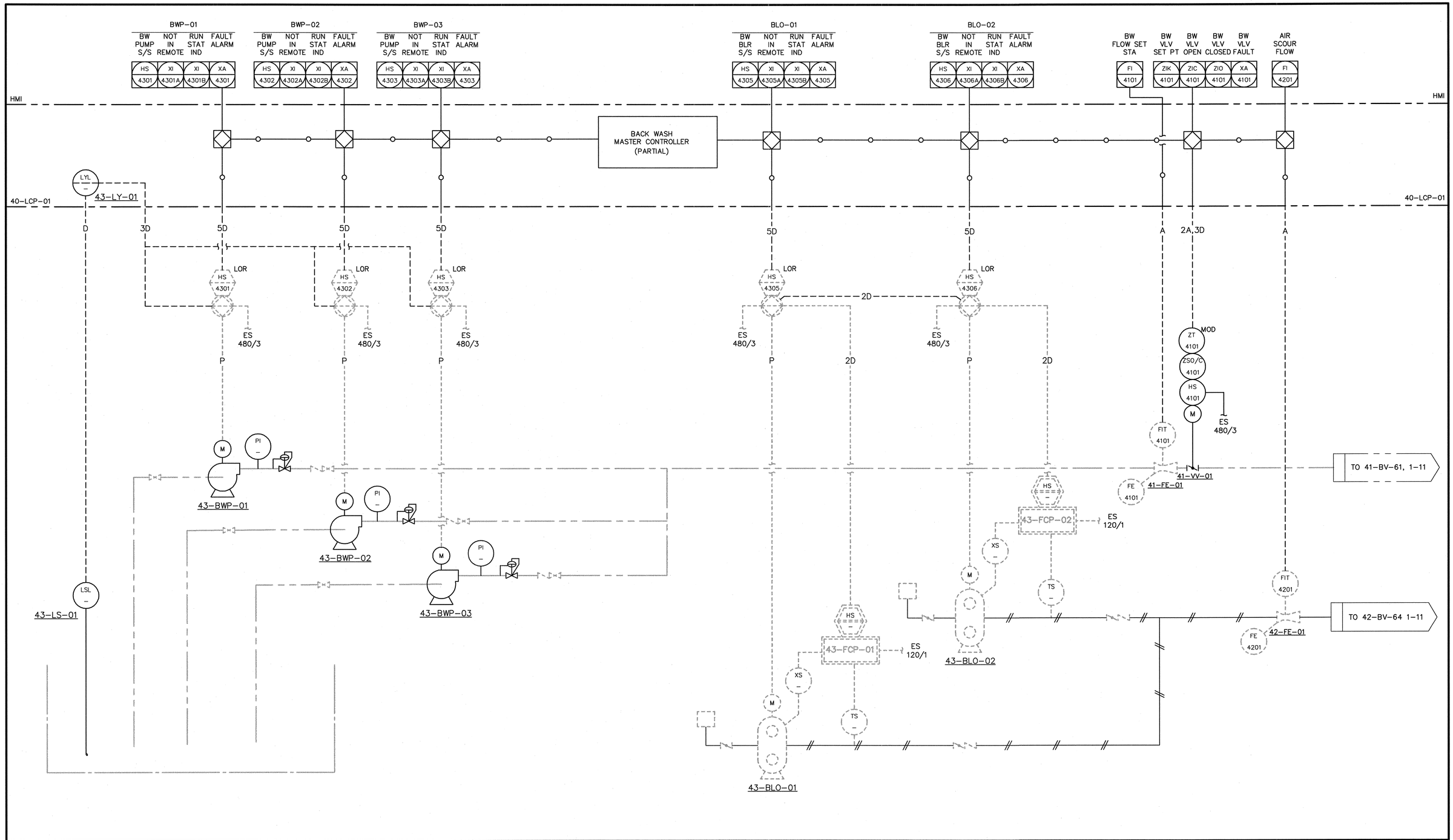

NO.	DATE	DESCRIPTION OF REVISION
0	02-22-08	INTIAL ISSUE

FU10291009.dwg 02.22.08

JORDAN JONES & GOULDING

FULTON COUNTY
BOARD OF COMMISSIONERS

REGISTERED No. 22049 PROFESSIONAL ENGINEER DONALD B. RICE

EFFLUENT FILTERS REHABILITATION
BIG CREEK WRF

PROCESS AND INSTRUMENTATION DIAGRAM
FILTER REHABILITATION
BACKWASH AND BLOWERS

DESIGNED:	CHECKED:	DATE: FEBRUARY 2008	I0.9	0
DRAWN: DBR	JOB NO. 2016.029.86	SCALE:	SHEET	REV

THIS LINE IS ONE INCH LONG WHEN PLOTTED FULL SCALE

DON.RICE

ELECTRICAL SYMBOLS

- FA – FLUORESCENT FIXTURE. LETTERS DENOTE FIXTURE TYPE (TYPICAL). SHADING INDICATES NIGHTLIGHT (TYPICAL). NUMERAL INDICATES CIRCUIT NUMBER (TYPICAL). SUBSCRIPT CORRESPONDS WITH SIMILARLY IDENTIFIED SWITCH OR MULTI–WAY SWITCH GROUP (TYPICAL)
- FA – FLUORESCENT FIXTURE, FLUSH IN CEILING. WITH BATTERY/INVERTER BALLAST
- FA – FLUORESCENT STRIP FIXTURE
- TRACK LIGHTING ASSEMBLY
- HA – LIGHTING FIXTURE, FLUSH IN CEILING
- HA – LIGHTING FIXTURE, SURFACE ON OR PENDANT MOUNT FROM CEILING
- HA – LIGHTING FIXTURE, WALL MOUNTED
- HA/PA – POLE AND LIGHTING FIXTURE
- XA – EXIT LIGHT SURFACE MOUNTED ON CEILING, ARROWS INDICATE DIRECTION
- XA – EXIT LIGHT SURFACE MOUNTED ON WALL, ARROWS INDICATE DIRECTION
- BA – BATTERY POWERED EMERGENCY LIGHT
- PE – PHOTOELECTRIC CELL
- DUPLEX RECEPTACLE, 18" AFF UNLESS OTHERWISE INDICATED. NUMERAL INDICATES CIRCUIT NUMBER (TYPICAL)
- DUPLEX RECEPTACLE, 48" AFF OR 6" ABOVE COUNTER TOP
- SINGLE RECEPTACLE, 18" AFF UNLESS OTHERWISE INDICATED
- SINGLE RECEPTACLE, 48" AFF OR 6" ABOVE COUNTER TOP
- SPECIAL PURPOSE RECEPTACLE, MOUNTING HEIGHT AND NEMA TYPE AS INDICATED
- FLUSH FLOOR BOX AS INDICATED
- DUPLEX RECEPTACLE, FLOOR MOUNTED
- CONTINUOUS RECEPTACLE PLUGMOLD, MOUNTING HEIGHT AND OUTLETS AS INDICATED
- TV – TELEVISION OUTLET IN WALL, BUSHED HOLE IN PLATE WITH EMPTY 3/4" CONDUIT HOMERUN TO TELEVISION CABINET, 18" AFF UNLESS OTHERWISE INDICATED
- CLOCK OUTLET, 7'–6" AFF
- S – SPEAKER, FLUSH IN CEILING
- S – SPEAKER, WALL MOUNTED 7'–6" AFF
- C – COMPUTER TERMINAL OUTLET IN WALL, BUSHED HOLE IN PLATE WITH EMPTY 3/4" CONDUIT HOMERUN WITH PULL WIRE TO COMPUTER BACKBOARD, 18" AFF UNLESS OTHERWISE INDICATED
- C – CLOSED CIRCUIT TELEVISION CAMERA
- TELEPHONE OUTLET IN WALL, BUSHED HOLE IN PLATE WITH EMPTY 1" CONDUIT HOMERUN WITH PULL WIRE TO TELEPHONE BACKBOARD, 18" AFF UNLESS OTHERWISE INDICATED
- T – 3/4" PLYWOOD BACKBOARD FOR TELEPHONE (HEIGHT AND WIDTH AS INDICATED)
- C – 3/4" PLYWOOD BACKBOARD FOR COMPUTER (HEIGHT AND WIDTH AS INDICATED)
- S – SINGLE POLE SWITCH, 48" AFF UNLESS OTHERWISE INDICATED. NUMERAL IN PARENTHESIS INDICATES CIRCUIT NUMBER (TYPICAL). SUBSCRIPT CORRESPONDS WITH SIMILARLY IDENTIFIED LIGHTING FIXTURES (TYPICAL)
- S_2 – DOUBLE POLE SWITCH, 48" AFF UNLESS OTHERWISE INDICATED
- S_3 – THREE WAY SWITCH, 48" AFF UNLESS OTHERWISE INDICATED
- S_4 – FOUR WAY SWITCH, 48" AFF UNLESS OTHERWISE INDICATED
- S_M – MANUAL MOTOR STARTER, SINGLE POLE 1 Hp UNLESS OTHERWISE INDICATED
- S_D – SINGLE POLE DIMMER SWITCH, WATTAGE AS INDICATED, 48" AFF UNLESS OTHERWISE INDICATED
- S_P – SINGLE POLE SWITCH WITH PILOT LIGHT, 48" AFF UNLESS OTHERWISE INDICATED
- S_K – SINGLE POLE KEY SWITCH, 48" AFF UNLESS OTHERWISE INDICATED
- WIRING IN CONDUIT CONCEALED IN OR ABOVE CEILING OR IN WALL
- WIRING IN CONDUIT CONCEALED IN OR UNDER FLOOR, OR UNDERGROUND CONCRETE ENCASED SINGLE CONDUIT DUCTBANK

ELECTRICAL SYMBOLS

- WIRING IN CONDUIT EXPOSED ON CEILING OR WALL
- GND – BRANCH CIRCUIT WIRING IN 3/4" CONDUIT HOMERUN AS INDICATED. ONE ARROW PER CIRCUIT. SLASHES INDICATE NUMBER OF CONDUCTORS, #12 UNLESS OTHERWISE INDICATED
- SIGNAL CONDUCTOR IN 3/4" CONDUIT, #16TSP UNLESS OTHERWISE INDICATED
- SEAL–OFF FITTING IN EXPOSED CONDUIT
- EMPTY CONDUIT CAPPED AND TAGGED "SPARE, TO_____"
- CONDUIT TURNS UP (TOWARDS VIEWER)
- CONDUIT TURNS DOWN (AWAY FROM VIEWER)
- FLEXIBLE CONDUIT CONNECTION
- * – INDICATES CONDUCTORS IN 3/4" CONDUIT UNLESS OTHERWISE INDICATED:
  "A" INDICATES ANALOG SIGNAL CONDUCTORS. SEE SCHEDULE.
  "C" INDICATES DISCRETE OR CONTROL CONDUCTORS. SEE SCHEDULE.
  "D" INDICATES DATA HIGHWAY CONDUCTORS. SEE SCHEDULE.
  DATA HIGHWAY CABLES ARE PROVIDED BY DIVISION 17 AND INSTALLED BY DIVISION 16.
  "H" INDICATES POWER CONDUCTORS ABOVE 240 VOLTS. SEE SCHEDULE.
  "L" INDICATES POWER CONDUCTORS 240 VOLTS AND BELOW. SEE SCHEDULE.
  "P" INDICATES POWER CONDUCTORS ABOVE 600 VOLTS. SEE SCHEDULE.
- * – INDICATES UNDERGROUND ELECTRICAL DUCTBANK. SEE SCHEDULE
- D – UNDERGROUND ELECTRICAL DUCTBANK. SEE DETAIL (TYPICAL)
- UT – UNDERGROUND TELEPHONE DUCTBANK
- UC – UNDERGROUND COMMUNICATION OR DATA HIGHWAY DUCTBANK
- G – 4/0 BARE COPPER GROUND WIRE
- LP – LIGHTNING PROTECTION CABLE
- UE – EXISTING UNDERGROUND ELECTRICAL DUCTBANK
- UEC – EXISTING UNDERGROUND COMMUNICATION OR DATA HIGHWAY DUCTBANK
- DUD – EXISTING UNDERGROUND ELECTRICAL DUCTBANK TO BE DEMOLISHED
- E – EXISTING OVERHEAD POWER LINES
- E – ELECTRICAL MANHOLE OR HANDHOLE, SIZE AS INDICATED (L x W x D):
  "C" INDICATES CONTROL, COMMUNICATION OR DATA HIGHWAY.
  "E" INDICATES SECONDARY DISTRIBUTION.
  "P" INDICATES PRIMARY DISTRIBUTION.
  "S" INDICATES SIGNAL.
  "T" INDICATES TELEPHONE.
- POWER POLE
- PANELBOARD, 240 VOLTS AND BELOW. SEE SCHEDULE
- PANELBOARD, ABOVE 240 VOLTS. SEE SCHEDULE
- OR – SUPPORT STAND/EQUIPMENT RACK. SEE DETAIL
- DEVICE REQUIRING ELECTRICAL CONNECTION, TYPE AS INDICATED (INSTRUMENT DESIGNATIONS PER ISA)
- MOTOR STARTER, VOLTAGE/NEMA SIZE/NEMA ENCLOSURE
- COMBINATION MOTOR STARTER, VOLTAGE/NEMA SIZE/NEMA ENCLOSURE
- CONTROLLER FURNISHED WITH EQUIPMENT
- N – NON–FUSED SAFETY SWITCH, AMPS/POLES/NEMA ENCLOSURE
- F – FUSED SAFETY SWITCH, AMPS/FUSE/POLES/NEMA ENCLOSURE
- ENCLOSED CIRCUIT BREAKER, AMPS/POLES/NEMA ENCLOSURE
- T – TRANSFORMER, KVA RATING AS INDICATED ON ONE LINE DIAGRAM
- M – MOTOR, Hp AS INDICATED ON ONE LINE DIAGRAM OR ON PLAN
- G – GENERATOR, kW AS INDICATED ON ONE LINE DIAGRAM
- D – OVERHEAD DOOR OPERATOR COMPLETE WITH WIRING TO PUSHBUTTONS, LIMIT SWITCHES AND OTHER ACCESSORIES
- ***** – EQUIPMENT TAG

ELECTRICAL SYMBOLS

- J – JUNCTION BOX OR PULL BOX. LETTERS/NUMERALS INDICATE NEMA TYPE OTHER THAN NEMA 1:
  "A" INDICATES ANALOG SIGNAL CONDUCTORS ONLY.
  "C" INDICATES CONTROL AND/OR COMMUNICATION CONDUCTORS.
  "D" INDICATES DATA HIGHWAY CONDUCTORS ONLY.
  "E" INDICATES GENERAL ELECTRICAL SYSTEM CONDUCTORS.
  "H" INDICATES POWER CONDUCTORS ABOVE 240 VOLTS.
  "L" INDICATES POWER CONDUCTORS 240 VOLTS AND BELOW.
  "P" INDICATES POWER CONDUCTORS ABOVE 600 VOLTS.
  "S" INDICATES SIGNAL CONDUCTORS (ANALOG AND/OR DATA HIGHWAY).
  "T" INDICATES TELEPHONE CONDUCTORS ONLY.
- J – OUTLET BOX OR CONDUIT FITTING
- CONTROL STATION
- GROUND ROD
- GROUND TEST WELL
- GROUND CONNECTION
- GROUND PLATE, SEE DETAIL
- F – FIRE ALARM DEVICE:
  "F" INDICATES MANUAL PULLSTATION MOUNTED 48" AFF.
  "FL" INDICATES FLAME DETECTOR MOUNTED AS INDICATED.
  "FS" INDICATES SPRINKLER FLOW SWITCH.
  "H" INDICATES HEAT DETECTOR MOUNTED ON CEILING.
  "P" INDICATES PHOTOELECTRIC IONIZATION DETECTOR MOUNTED ON CEILING.
  "S" INDICATES SMOKE DETECTOR MOUNTED ON CEILING.
  "TS" INDICATES SPRINKLER TAMPER SWITCH.
  "V" INDICATES VISUAL INDICATOR (STROBE) MOUNTED AS INDICATED.
- S – SMOKE DETECTOR, DUCT MOUNTED
- F – FIRE ALARM SYSTEM HORN MOUNTED 6'–8" AFF
- F – FIRE ALARM SYSTEM HORN AND STROBE MOUNTED 6'–8" AFF

ELECTRICAL ABBREVIATIONS

AFF	– ABOVE FINISHED FLOOR
AFG	– ABOVE FINISHED GRADE
AIC	– AMPS INTERRUPTING CAPACITY
AL	– ALUMINUM
C	– CONDUIT
CR	– CORROSION RESISTANT, NEMA 4X
CU	– COPPER
EC	– EMPTY CONDUIT
EX	– EXISTING
EXP	– EXPLOSIONPROOF
EXR	– EXISTING TO BE REMOVED
FCP	– FACTORY CONTROL PANEL (PROVIDED WITH EQUIPMENT)
FWE	– FURNISHED WITH EQUIPMENT
G	– GROUND
GFI	– GROUND FAULT INTERRUPTING
GRS	– GALVANIZED RIGID STEEL CONDUIT
LCP	– LOCAL CONTROL PANEL (PROVIDED UNDER DIVISION 17)
MB	– MAIN BREAKER
MCC	– MOTOR CONTROL CENTER
MCCB	– MOLDED CASE CIRCUIT BREAKER
MCP	– MOTOR CIRCUIT PROTECTOR
ML	– MAIN LUGS
MLO	– MAIN LUGS ONLY
NC	– NORMALLY CLOSED
NO	– NORMALLY OPEN
PB	– PULLBOX
SHLD	– SHIELDED CABLE
SS	– STAINLESS STEEL
T	– TRANSFORMER
TSP	– TWISTED, SHIELDED PAIR
TVSS	– TRANSIENT VOLTAGE SURGE SUPPRESSOR
VFD	– VARIABLE FREQUENCY DRIVE
VSD	– VARIABLE SPEED DRIVE
WP	– WEATHERPROOF, NEMA 4 OR 3R

THIS LINE ___ IS ONE INCH LONG WHEN PLOTTED FULL SCALE

NO.	DATE	DESCRIPTION OF REVISION
0	02–22–08	INTIAL ISSUE

FU1029E001.dwg 12.05.07

JORDAN JONES & GOULDING

FULTON COUNTY
BOARD OF COMMISSIONERS

GEORGIA REGISTERED PROFESSIONAL ENGINEER THOMAS H. MIDDLEBROOKS 02/22/08

EFFLUENT FILTERS REHABILITATION
BIG CREEK WRF

SYMBOLS LEGEND

DESIGNED: THM	CHECKED: MB	DATE: FEBRUARY 2008	E0.1	0
DRAWN: LAB	JOB NO. 2016.029.86	SCALE: NONE	SHEET	REV

THIS LINE ___ IS ONE INCH LONG WHEN PLOTTED FULL SCALE

LBACEVIC

NOTES:

1. DISCONNECT EXISTING 480 VOLT, 3 PHASE POWER TO EACH BACKWASH PUMP MOTOR AND RECONNECT TO EACH NEW MOTOR.
2. ALL EXPOSED CONDUIT, FITTINGS, ETC. SHALL BE PVC COATED GALVANIZED RIGID STEEL. ALL ELECTRICAL EQUIPMENT AND DEVICES SHALL HAVE A MINIMUM RATING OF NEMA 4X. ALL ELECTRICAL BOXES AND ENCLOSURES SHALL BE STAINLESS STEEL. ALL SUPPORTING MATERIALS AND HARDWARE SHALL BE STAINLESS STEEL.
3. PUMP TO BE TAKEN OUT OF SERVICE. DISCONNECT AND REMOVE WIRE BACK TO MOTOR STARTER.

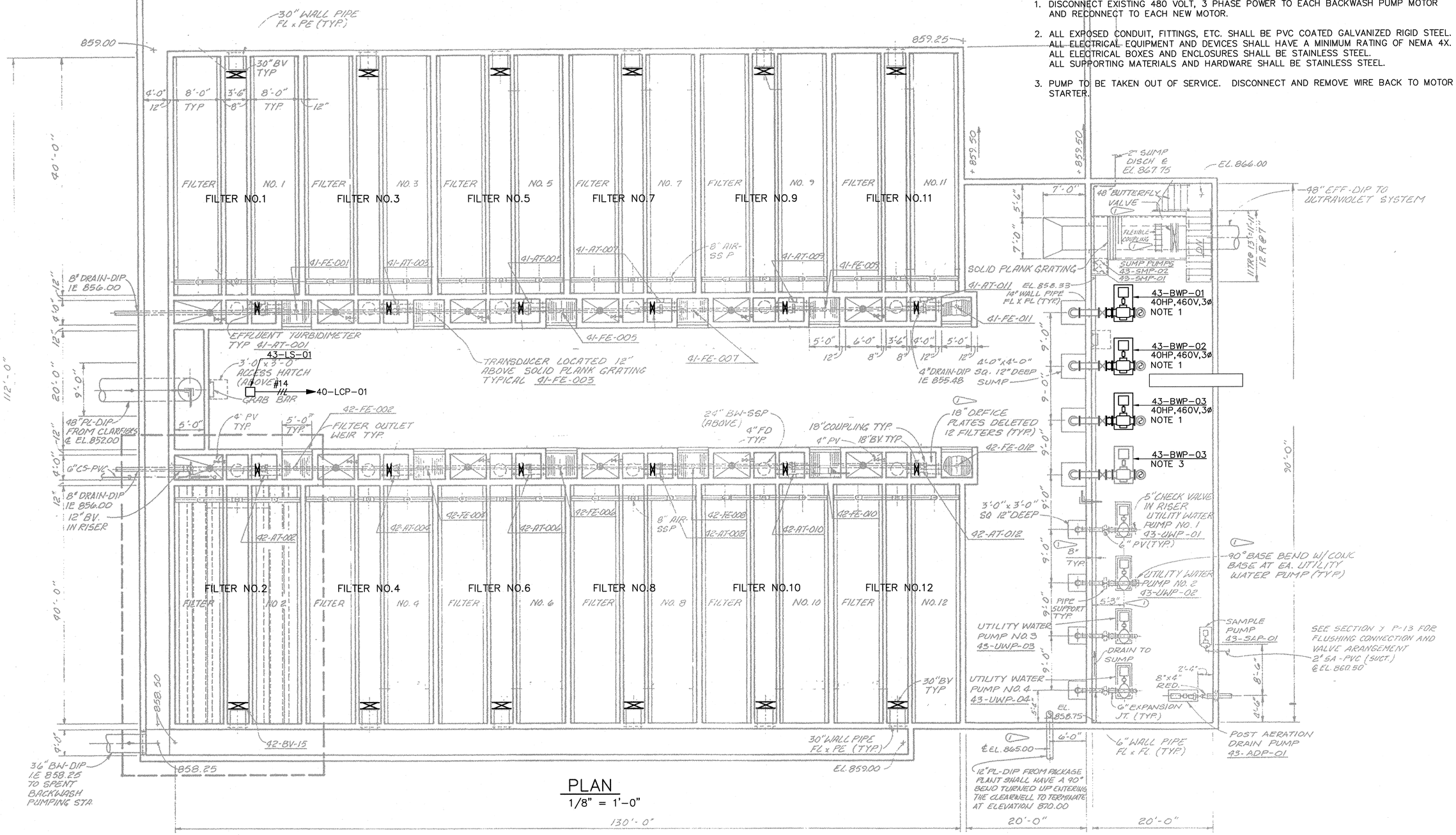

PLAN
1/8" = 1'-0"

NO.	DATE	DESCRIPTION OF REVISION
0	02-22-08	INTIAL ISSUE

FU1029e002.dwg 02.21.08

JORDAN JONES & GOULDING

FULTON COUNTY
BOARD OF COMMISSIONERS

GEORGIA REGISTERED PROFESSIONAL ENGINEER THOMAS H. MIDDLEBROOKS 02/22/08

EFFLUENT FILTERS REHABILITATION
BIG CREEK WRF

BOTTOM PLAN

DESIGNED: THM	CHECKED:	DATE: FEBRUARY 2008	E0.2	0
DRAWN: LAB	JOB NO. 2016.029.86	SCALE: AS SHOWN	SHEET	REV

THIS LINE IS ONE INCH LONG WHEN PLOTTED FULL SCALE

LISA.BACEVIC

NOTES:

1. PROVIDE INTERLOCKING TO PROHIBIT SIMULTANEOUS OPERATION OF BOTH BLOWERS.
2. DISCONNECT AND REMOVE SIGNAL WIRING BACK TO FILTER CONTROL PANEL FOR EXISTING FLOW TRANSMITTER. PROVIDE NEW SIGNAL WIRING AS INDICATED.
3. DISCONNECT SIGNAL/CONTROL AND POWER WIRING TO EXISTING VALVE OPERATOR AND REMOVE CONTROL/SIGNAL WIRING BACK TO FILTER CONTROL PANEL. CONNECT NEW SIGNAL WIRING AND RECONNECT 480 VOLT, THREE PHASE POWER TO NEW OPERATOR.
4. ALL EXPOSED CONDUIT, FITTINGS, ETC. SHALL BE PVC COATED GALVANIZED RIGID STEEL. ALL ELECTRICAL EQUIPMENT AND DEVICES SHALL HAVE A MINIMUM RATING OF NEMA 4X. ALL ELECTRICAL BOXES AND ENCLOSURES SHALL BE STAINLESS STEEL. ALL SUPPORTING MATERIALS AND HARDWARE SHALL BE STAINLESS STEEL.

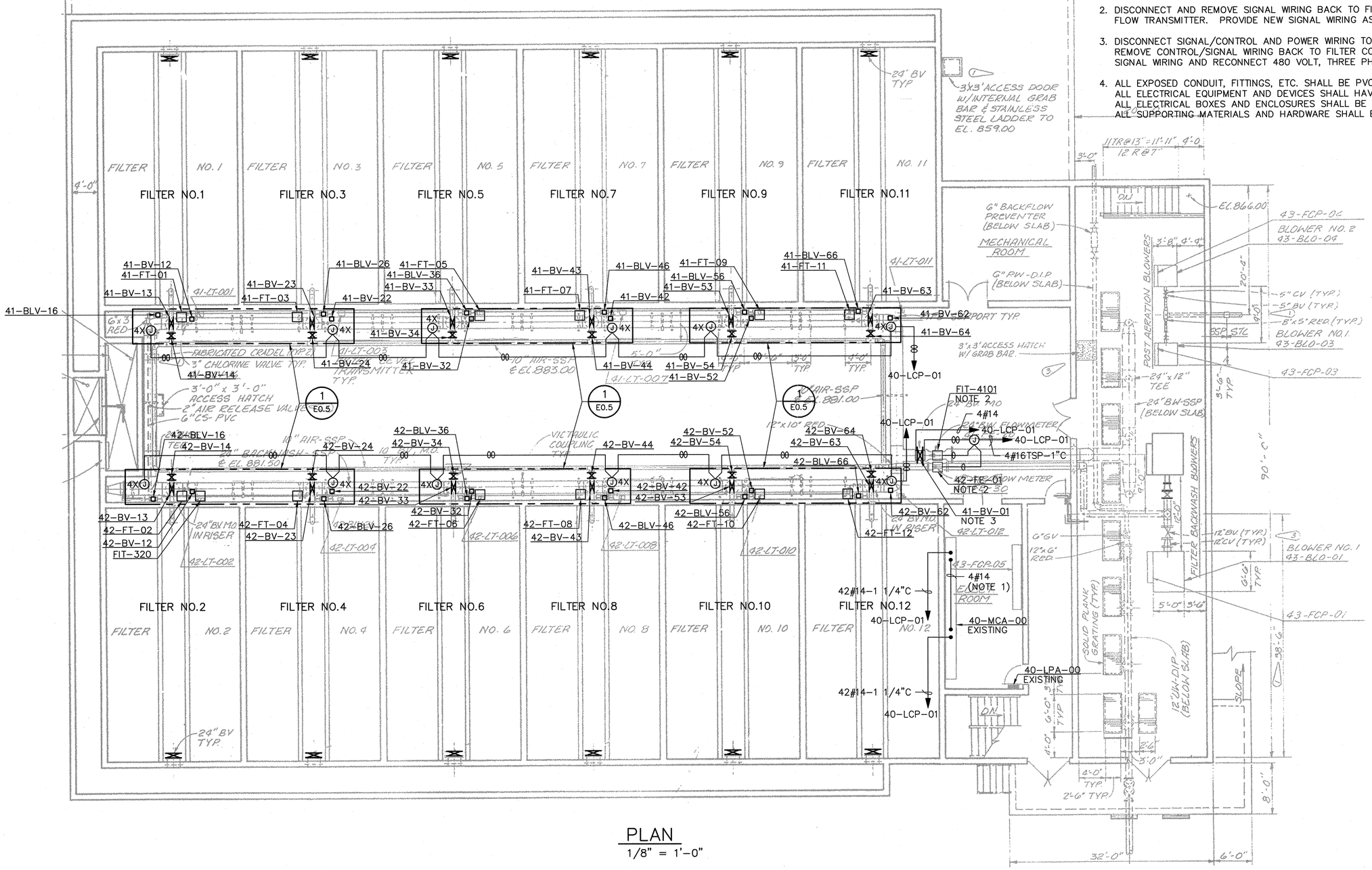

PLAN
1/8" = 1'-0"

FU1029e003.dwg	02.21.08	0	02-22-08	INTIAL ISSUE
		NO.	DATE	DESCRIPTION OF REVISION

JORDAN JONES & GOULDING

FULTON COUNTY
BOARD OF COMMISSIONERS

GEORGIA REGISTERED PROFESSIONAL ENGINEER THOMAS H. MIDDLEBROOKS 02/12/08

EFFLUENT FILTERS REHABILITATION
BIG CREEK WRF

INTERMEDIATE PLAN

DESIGNED: THM	CHECKED:	DATE: FEBRUARY 2008	E0.3	0
DRAWN: LAB	JOB NO. 2016.029.86	SCALE: AS SHOWN	SHEET	REV

THIS LINE IS ONE INCH LONG WHEN PLOTTED FULL SCALE

LISA.BACEVIC

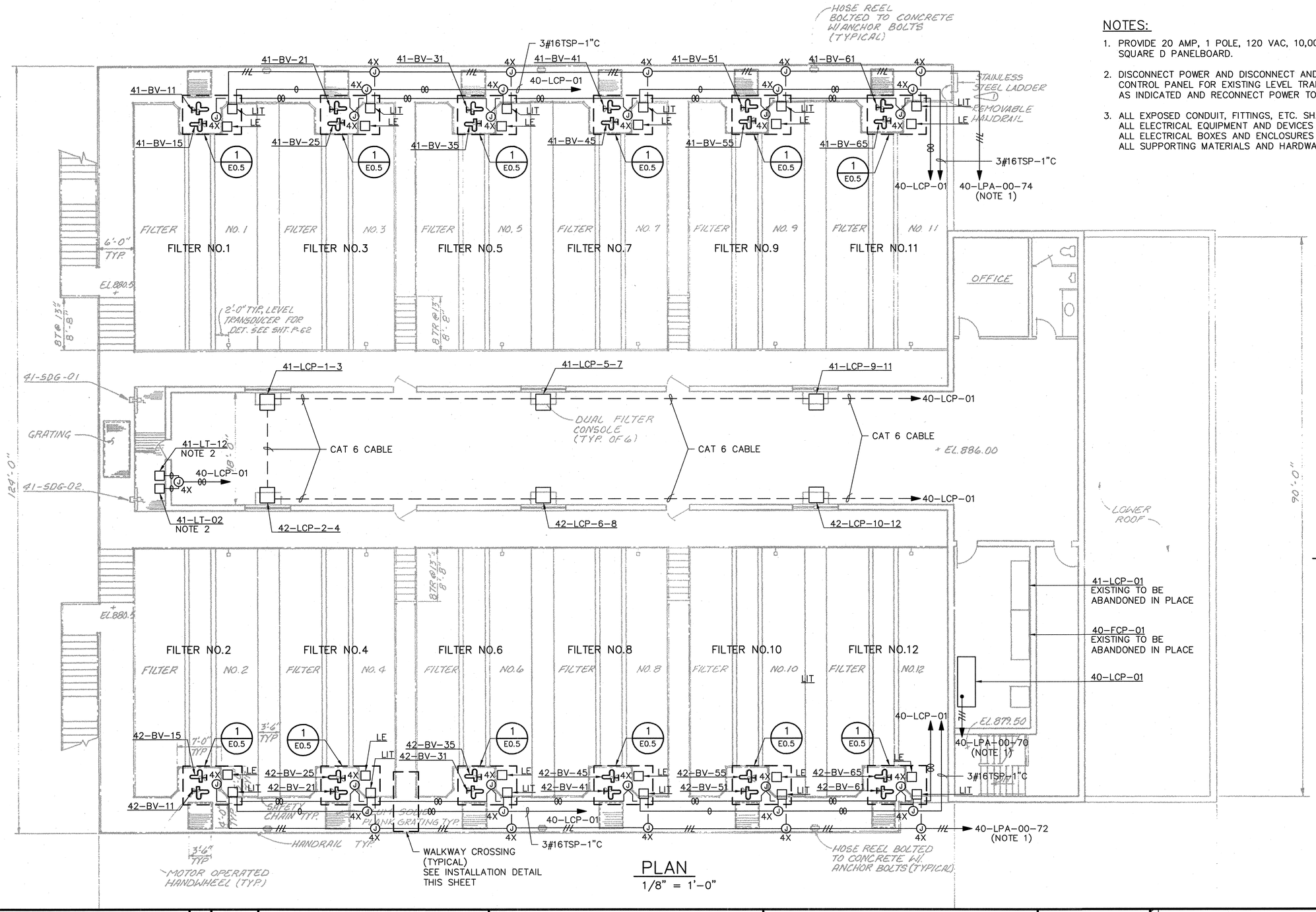

PLAN

1/8" = 1'-0"

NOTES:

1. PROVIDE 20 AMP, 1 POLE, 120 VAC, 10,000 AIC CIRCUIT BREAKER IN EXISTING SQUARE D PANELBOARD.
2. DISCONNECT POWER AND DISCONNECT AND REMOVE SIGNAL WIRING BACK TO FILTER CONTROL PANEL FOR EXISTING LEVEL TRANSMITTER. PROVIDE NEW SIGNAL WIRING AS INDICATED AND RECONNECT POWER TO NEW TRANSMITTERS.
3. ALL EXPOSED CONDUIT, FITTINGS, ETC. SHALL BE PVC COATED GALVANIZED RIGID STEEL. ALL ELECTRICAL EQUIPMENT AND DEVICES SHALL HAVE A MINIMUM RATING OF NEMA 4X. ALL ELECTRICAL BOXES AND ENCLOSURES SHALL BE STAINLESS STEEL. ALL SUPPORTING MATERIALS AND HARDWARE SHALL BE STAINLESS STEEL.

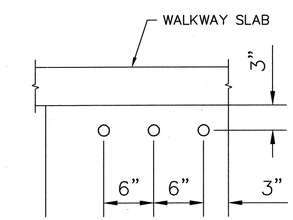

NOTE: 1 1/2" DIAMETER HOLES MAXIMUM.

CONDUIT INSTALLATION

N.T.S.

NO.	DATE	DESCRIPTION OF REVISION
0	02-22-08	INTIAL ISSUE

FU1029e004.dwg 02.21.08

JORDAN JONES & GOULDING

FULTON COUNTY BOARD OF COMMISSIONERS

EFFLUENT FILTERS REHABILITATION
BIG CREEK WRF

TOP PLAN

DESIGNED: THM	CHECKED:	DATE: FEBRUARY 2008	E0.4 SHEET
DRAWN: LAB	JOB NO. 2016.029.86	SCALE: AS SHOWN	0 REV

THIS LINE IS ONE INCH LONG WHEN PLOTTED FULL SCALE

LISA.BACEWC

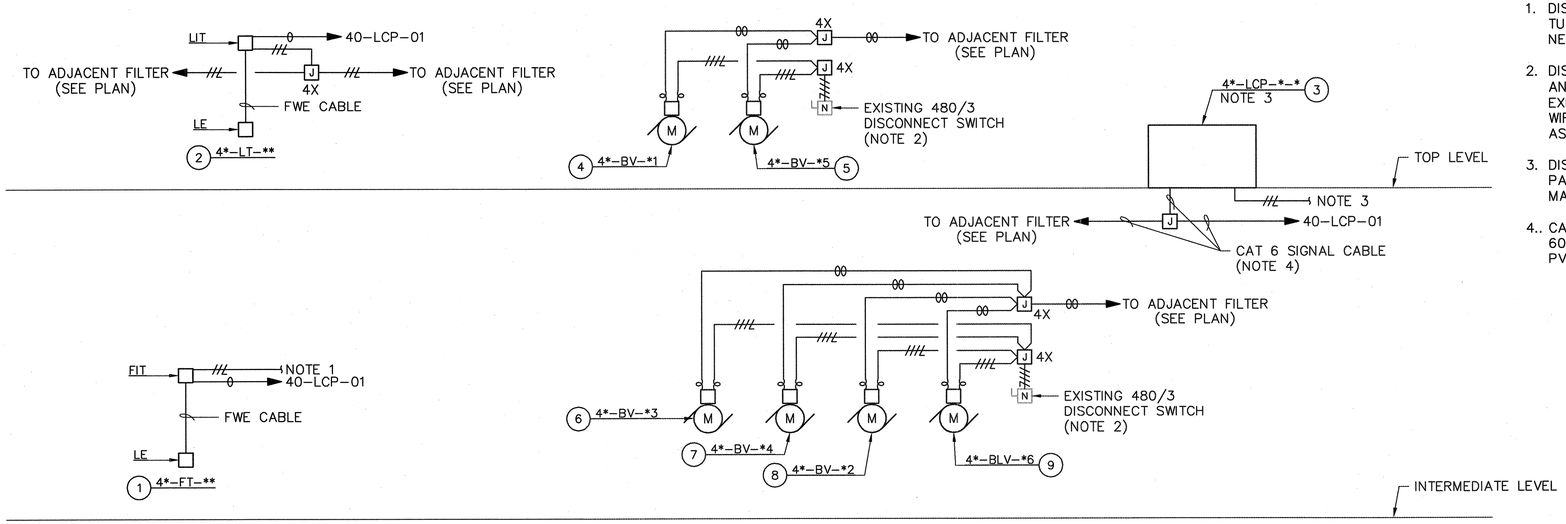

NOTES:

1. DISCONNECT SIGNAL AND POWER WIRING TO EACH EXISTING FLOW TRANSMITTER AND TURBIDIMETER. REMOVE SIGNAL WIRING BACK TO FILTER CONTROL PANEL. PROVIDE NEW SIGNAL WIRING AND RECONNECT POWER WIRING AS INDICATED.
2. DISCONNECT CONTROL/SIGNAL AND POWER WIRING TO EACH EXISTING VALVE OPERATOR AND REMOVE CONTROL/SIGNAL WIRING BACK TO FILTER CONTROL PANEL. REMOVE EACH EXISTING ACTUATOR CONTROL STATION AND WIRING. CONNECT DATA HIGHWAY SIGNAL WIRING AND RECONNECT 480 VOLT, THREE PHASE POWER TO EACH NEW OPERATOR AS INDICATED.. PLUG ANY UNUSED HOLES IN EXISTING DISCONNECT SWITCHES.
3. DISCONNECT POWER TO EXISTING FILTER LOCAL CONTROL PANEL. RECONNECT TO NEW PANEL. REMOVE SIGNAL AND CONTROL WIRING BETWEEN LOCAL PANEL AND FILTER MAIN CONTROL PANEL 40-FCP-01.
4.. CATEGORY 6 ETHERNET CABLES: COPPER CONDUCTOR, 300 VOLT INSULATION, RATED 60 DEGREES C, INDIVIDUAL CONDUCTORS TWISTED TOGETHER AND COVERED WITH A PVC JACKET; UL LISTED.

TAG	1 TAG	2 TAG	3 TAG	4 TAG	5 TAG	6 TAG	7 TAG	8 TAG	9 TAG
FILTER NO.1	41-FT-01	41-LT-01	41-LCP-1-3	41-BV-11	41-BV-15	41-BV-13	41-BV-14	41-BV-12	41-BLV-16
FILTER NO.2	42-FT-02	42-LT-02	42-LCP-2-4	42-BV-11	42-BV-15	42-BV-13	42-BV-14	42-BV-12	42-BLV-16
FILTER NO.3	41-FT-03	41-LT-03	41-LCP-1-3	41-BV-21	41-BV-25	41-BV-23	41-BV-24	41-BV-22	41-BLV-26
FILTER NO.4	42-FT-04	42-LT-04	42-LCP-2-4	42-BV-21	42-BV-25	42-BV-23	42-BV-24	42-BV-22	42-BLV-26
FILTER NO.5	41-FT-05	41-LT-05	41-LCP-5-7	41-BV-31	41-BV-35	41-BV-33	41-BV-34	41-BV-32	41-BLV-36
FILTER NO.6	42-FT-06	42-LT-06	42-LCP-6-8	42-BV-31	42-BV-35	42-BV-33	42-BV-34	42-BV-32	42-BLV-36
FILTER NO.7	41-FT-07	41-LT-07	41-LCP-5-7	41-BV-41	41-BV-45	41-BV-43	41-BV-44	41-BV-42	41-BLV-46
FILTER NO.8	42-FT-08	42-LT-08	42-LCP-6-8	42-BV-41	42-BV-45	42-BV-43	42-BV-44	42-BV-42	42-BLV-46
FILTER NO.9	41-FT-09	41-LT-09	41-LCP-9-11	41-BV-51	41-BV-55	41-BV-53	41-BV-54	41-BV-52	41-BLV-56
FILTER NO.10	42-FT-10	42-LT-10	42-LCP-10-12	42-BV-51	42-BV-55	42-BV-53	42-BV-54	42-BV-52	42-BLV-56
FILTER NO.11	41-FT-11	41-LT-11	41-LCP-9-11	41-BV-61	41-BV-65	41-BV-63	41-BV-64	41-BV-62	41-BLV-66
FILTER NO.12	42-FT-12	42-LT-12	42-LCP-10-12	42-BV-61	42-BV-65	42-BV-63	42-BV-64	42-BV-62	42-BLV-66

FILTER WIRING DETAIL

N.T.S.

1 E0.3 E0.4

NO.	DATE	DESCRIPTION OF REVISION
0	02-22-08	INTIAL ISSUE

FU1029E005.dwg 02.21.08

JORDAN JONES & GOULDING

FULTON COUNTY
BOARD OF COMMISSIONERS

GEORGIA REGISTERED PROFESSIONAL ENGINEER THOMAS H. MIDDLEBROOKS 02/22/08

EFFLUENT FILTERS REHABILITATION
BIG CREEK WRF

WIRING DETAILS

DESIGNED: THM	CHECKED:	DATE: FEBRUARY 2008	E0.5	0
DRAWN: LAB	JOB NO. 2016.029.86	SCALE: NONE	SHEET	REV

THIS LINE IS ONE INCH LONG WHEN PLOTTED FULL SCALE

LISA.BACEVIC