FULTON COUNTY

Vision

People *Families* *Neighborhoods*

Mission

To serve, protect and govern in concert with local municipalities

Values

People *Customer Services*
Ethics *Resource Management*
Innovation *Equal Opportunity*

REQUEST FOR INVITATION TO BID NO. #08ITB62600K-JD

T243 REYNOLDS ROAD AT WESTLAKE PARKWAY INTERSECTION IMPROVEMENT

For

FULTON COUNTY DEPARTMENT OF PUBLIC WORKS

BID DUE DATE AND TIME: AUGUST 18, 2008 11:00 A.M.
BID ISSUANCE DATE: JULY 16, 2008
PURCHASING CONTACT: JOYCE DANIEL at (404) 612-5824
EMAIL: JOYCE.DANIEL@FULTONCOUNTYGA.GOV

LOCATION: FULTON COUNTY DEPARTMENT OF PURCHASING & CONTRACT COMPLIANCE
130 PEACHTREE STREET, S.W., SUITE 1168
ATLANTA, GA 30303

TABLE OF CONTENTS

INVITATION TO BID 4
- DESCRIPTION OF PROJECT 4
- PERMITS 4
- RIGHTS OF WAY/EASEMENTS 4
- BID DOCUMENTS 4
- TERM OF CONTRACT 5
- NO CONTACT PROVISION 5
- BID CONTACT 5
- BASIS OF AWARD 5
- PRE-BID CONFERENCE 6

SECTION I: INSTRUCTIONS TO BIDDERS 7

REQUIRED BID SUBMITTAL CHECK LIST FOR INVITATION TO BID (ITB) 18

SECTION II: BID DOCUMENTS 19
- PRICE QUOTE 19
- BID FORM 25
- BID BOND 27

SECTION III: PURCHASING FORMS & INSTRUCTIONS 31

FORM A: NON-COLLUSION AFFIDAVIT OF BIDDER/OFFEROR 32

FORM B: FULTON COUNTY CERTIFICATE OF ACCEPTANCE OF BID/PROPOSAL REQUIREMENTS 34

FORM C1: CONTRACTOR'S GEORGIA UTILITY LICENSE CERTIFICATION 35

FORM C2: CONTRACTOR'S GEORGIA GENERAL CONTRACTOR'S LICENSE CERTIFICATION 36

FORM C3: GEORGIA PROFESSIONAL LICENSE CERTIFICATION 37

FORM D: CERTIFICATION REGARDING DEBARMENT 38

FORM E: DISCLOSURE FORM AND QUESTIONNAIRE 41

FORM F: DECLARATION OF EMPLOYEE-NUMBER CATEGORIES 44

FORM G: GEORGIA SECURITY AND IMMIGRATION CONTRACTOR AFFIDAVIT AND AGREEMENT 46

FORM H: GEORGIA SECURITY AND IMMIGRATION SUBCONTRACTOR AFFIDAVIT 49

SECTION IV: CONTRACT COMPLIANCE REQUIREMENTS 51
- EXHIBIT A – PROMISE OF NON-DISCRIMINATION 53
- EXHIBIT B – EMPLOYMENT REPORT 54
- EXHIBIT C – SCHEDULE OF INTENDED SUBCONTRACTOR UTILIZATION 55
- EXHIBIT D – LETTER OF INTENT TO PERFORM AS A SUBCONTRACTOR 58
- EXHIBIT E – DECLARATION REGARDING SUBCONTRACTING PRACTICES 59
- EXHIBIT F – JOINT VENTURE DISCLOSURE AFFIDAVIT 60
- EXHIBIT G – PRIME CONTRACTOR/SUBCONTRACTOR UTILIZATION REPORT 63

SECTION V: INSURANCE AND RISK MANAGEMENT PROVISIONS CONSTRUCTION 64

SECTION VI: SAMPLE CONTRACTUAL AGREEMENT 68

SECTION VII: PERFORMANCE BOND REQUIREMENTS 71

SECTION VIII: PAYMENT BOND REQUIREMENTS 75

SECTION IX: GENERAL CONDITIONS 79

SECTION X: SPECIAL CONDITIONS 85

SECTION XI: APPENDICES 124

APPENDIX A: CONTRACTOR SAFETY AND HEALTH MANAGEMENT PROCESS 125
APPENDIX B: SPECIAL ASSURANCES FOR UTILITY CONTRACT WORK WITHIN PUBLIC RIGHT-OF-WAY 136
APPENDIX C: ARTICLE 1 - SAFETY 137
APPENDIX D: JOB SAFETY ANALYSIS WORKSHEET EXAMPLE AND INFORMATION 140
APPENDIX E: FACT FINDING GUIDE - GL 141
FINAL AFFIDAVIT 144

INVITATION TO BID

T243 Reynolds Road at Westlake Parkway Intersection Improvement

Sealed Bids for furnishing all materials, labor, tools, equipment and appurtenances necessary for the construction of Reynolds Road at Westlake Parkway Intersection Improvement Project will be received by the Fulton County Department of Purchasing and Contract Compliance at 130 Peachtree Street, S.W. Suite 1168 Atlanta, GA 30303, until **11:00 A.M., local time, on Monday, August 18, 2008,** and then at said office publicly opened and read aloud.

DESCRIPTION OF PROJECT

This is an existing offset roundabout at a 4-way intersection with curb and gutter and sidewalks. The project proposes to convert the roundabout to a 4-way intersection with stop signs. Auxiliary right turn lanes will be provided on each approach. The design will have 12' lanes, curb and gutter, 5' sidewalks, ADA ramps and a crosswalk will be provided for the westerly approach. The project length is 0.4 miles.

PERMITS

All applicable permits required for the project have been obtained except the Notice of Intent (NOI). The contractor is responsible for obtaining this permit prior to beginning construction. The NOI is to be submitted to the Georgia EPD. For forms and office locations, see Section IX General Conditions.

RIGHTS OF WAY/EASEMENTS

All applicable rights of way and easements required for the project have been obtained.

BID DOCUMENTS

The Instructions to Bidders, Bid and Contract Requirements (Bid Form, Bid Bond, Performance Bond, Payment Bond, Contract Agreement), and other Documents (Drawings and/or Specifications) may be examined at the following location:

Transportation Planning
Fulton County Government Center
Suite 6066
141 Pryor Street, S.W., 6th Floor
Atlanta, Georgia 30303

This document and supporting documents can be downloaded at the Fulton County Website, http://www.fultoncountyga.gov under "Bid Opportunities".

A complete set of plans may be purchased from Imaging Technologies in the amount of **$29.58 including taxes** and is non-refundable. Orders can be placed on-line, by phone, or by mail at the following:

Imaging Technologies
Attention: Mr. Huey Murphy
640 10th Street, N.W.
Atlanta, Georgia 30318
(404) 873-5911
https://order.e-arc.com/arcEOC/x_project.asp?de=e3283f0e-1d78-433e-bc31-b15d8589c188

All other questions should be addressed by the procedures outlined in this ITB to Joyce Daniel, Fulton County Department of Purchasing and Contract Compliance at (404) 612-5824, joyce.daniel@fultoncountyga.gov.

TERM OF CONTRACT

The Bidder agrees hereby to commence work under this Contract, with adequate personnel and equipment, on a date to be specified in a written order of the Construction Manager and to fully complete all work under this Contract within **Ninety (90) available days** from and including said date.

NO CONTACT PROVISION

It is the policy of Fulton County that the evaluation and award process for County contracts shall be free from both actual and perceived impropriety, and that contacts between potential vendors and County officials, elected officials and staff regarding pending awards of County contracts shall be prohibited.

A. No person, firm, or business entity, however situated or composed, obtaining a copy of or responding to this solicitation, shall initiate or continue any verbal or written communication regarding this solicitation with any County officer, elected official, employee, or designated County representative, between the date of the issuance of this solicitation and the date of the County Manager's recommendation to the Board of Commissioners for award of the subject contract, except as may otherwise be specifically authorized and permitted by the terms and conditions of this solicitation.

B. All verbal and written communications initiated by such person, firm, or entity regarding this solicitation, if same are authorized and permitted by the terms and conditions of this solicitation, shall be directed to the Purchasing Agent.

C. Any violation of this prohibition of the initiation or continuation of verbal or written communications with County officers, elected officials, employees, or designated County representatives shall result in a written finding by the Purchasing Agent that the submitted Bid or proposal of the person, firm, or entity in violation is "non-responsive", and same shall not be considered for award.

BID CONTACT

Information regarding the bid or bid requirements, either procedural or technical, may be obtained by submitting questions in writing to:

Fulton County Department of Purchasing and Contract Compliance
Attn: Joyce Daniel, Assistant Purchasing Agent
Fulton County Public Safety Building
130 Peachtree Street, S.W. Suite 1168
Atlanta, GA 30303
Phone: (404) 612-5824
Fax: (404) 335-5806
Reference Bid # 08ITB62600K-JD

Or joyce.daniel@fultoncountyga.gov

BASIS OF AWARD

The Contract, if awarded, will be awarded to the lowest responsive and responsible bidder. No bid may be withdrawn for a period of sixty (60) days after the date of bid opening except as permitted by O.C.G.A., §36-91-41 et seq., as amended. Each Bid must be accompanied by a Bid Bond in accordance with the Bid Bond Requirements provided in the Contract Documents, on a Surety Company's Standard Bid Bond Form acceptable to the County in an amount no less than 5% of the amount bid. The successful bidder will be required to furnish a Performance Bond and Payment Bond, on or before the issuance of Notice to Proceed, each in the amount of 100% of the Contract Amount. All other required Contract Documents must be fully completed and executed by the Contractor and his/her Surety, and submitted to the Owner on or before the issuance of the Notice to Proceed.

PRE-BID CONFERENCE

Date: **Monday, August 4, 2008**
Time: **1:00 P.M.**
Location: Fulton County Department of Purchasing and Contract Compliance,
Public Safety Building
130 Peachtree Street, S.W. Suite 1168
Atlanta, GA 30303

An optional pre-bid conference will be held in the Fulton County Department of Purchasing and Contract Compliance Conference Room, located at 130 Peachtree Street, S.W. Suite 1168, Atlanta, Georgia 30303. **Inquiries regarding the solicitation either technical or otherwise may be submitted in writing prior to the pre-bid conference and will be addressed at the pre-bid conference.** Any additional questions asked at the pre-bid conference must be submitted in written form at the pre-bid conference and will be responded to in the form of an addendum with the County's official responses.

The Pre-bid conference will be conducted for the purpose of explaining the County's bid process, the specifications/technical documents, and to provide non-binding verbal responses to questions concerning these bid specifications and to discuss issues from the bidders perspective. However, no verbal response provided at the pre-bid conference binds the County. Only those responses to written questions that are responded to by the County in written communications will be official.

SECTION I: INSTRUCTIONS TO BIDDERS

A. Contract Documents

The Contract Documents include the Contract Agreement, Contractor's Bid (including all documentation accompanying the Bid and any post-Bid documentation required by the County prior to the Notice of Award), Bonds, all Special Conditions, General Conditions, Supplementary Conditions, Specifications, Drawings and addenda, together with written amendments, change orders, field orders and the Construction Manager's written interpretations and clarifications issued in accordance with the General Conditions on or after the date of the Contract Agreement.

Shop drawing submittals reviewed in accordance with the General Conditions, geotechnical investigations and soils report and drawings of physical conditions in or relating to existing surface structures at or contiguous to the site are not Contract Documents.

The Contract Documents shall define and describe the complete work to which they relate.

B. Bid Preparation and Execution

All Bids must be made on the Bid forms contained herein. The original signed Bid with three (3) copies shall be submitted in a sealed envelope, addressed to the Department of Purchasing and Contract Compliance, Fulton County Public Safety Building, 130 Peachtree Street, S.W., Suite 1168 Atlanta, Georgia 30303, and labeled "Bid for ITB T243 Reynolds Road at Westlake Parkway Intersection Improvement.

Additionally, ***THE BIDDER IS ALSO REQUIRED TO WRITE THEIR GEORGIA UTILITY CONTRACTOR LICENSE NUMBER ON THE OUTSIDE OF THE SEALED BID ENVELOPE.***

REQUIRED SUBMITTALS: The bidder **must complete and execute** the following:

1. Bid Form
2. Acknowledgement of each Addendum
3. Bid Bond
4. Purchasing Forms (See Submittal Check List at end of this Section), fully executed
5. Contract Compliance Forms (See Submittal Check List at end of this Section), fully executed
6. Risk Management Insurance Provisions Form

Any bids received after the stated time and date will not be considered. It shall be the sole responsibility of the bidder to have his/her bid delivered to the Fulton County Department of Purchasing and Contract Compliance for receipt on or before the stated time and date (see Section 00020). If a bid is sent by U.S. Mail, the bidder shall be responsible for its timely delivery to the Purchasing Department. Bids delayed by mail will not be considered, shall not be opened, and arrangements shall be made for their return at the bidder's request and expense.

Bid shall be publicly opened, with only the names and total bid price of the bidders disclosed at the opening.

C. Addenda and Interpretations

No interpretations of the meaning of the Drawings, Specifications or other pre-bid documents will be made to any Bidder orally.

Bidders requiring clarification or interpretation of the Contract Documents shall make a request in writing, either by mail, hand delivery, e-mail or fax, to the Purchasing Agent at the address below. To be given consideration, requests must be received no later than **2:00 P.M., Wednesday, August 6, 2008**. The County will not respond to any requests, oral or written, received after this date. Telephone inquiries will not be accepted.

Fulton County Department of Purchasing and Contract Compliance
Attn: Joyce Daniel, Assistant Purchasing Agent
Fulton County Public Safety Building
130 Peachtree Street, S.W., 1168
Atlanta, GA 30303
Fax: (404) 893-1744
Joyce.daniel@fultoncountyga.gov
Reference Bid # 08ITB60600K-JD

Only communications from firms that are in writing and signed will be recognized by the County as duly authorized expressions on behalf of proposers/bidders. Any and all such interpretations and any supplemental instructions will be in the form of written Addenda to the Contract Documents which, if issued, will be mailed, shipped or faxed to all prospective Bidders (at the respective addresses furnished) prior to the date fixed for the opening of Bids.

Failure of Bidders to receive or acknowledge any Addendum shall not relieve them of any obligation under the Bid. All Addenda shall become part of the Contract Documents.

D. **Site Examination**

There will not be a scheduled site visit for this project. However, bidders are encouraged to visit the project site on their own.

E. **Bidder's Modification and Withdrawal of Bids**

A Bidder may modify or withdraw its bid by written request, provided that the request is received by the County prior to the bid due date and time at the address to which bids are to be submitted. Provided further, that in case of an electronic request (i.e. facsimile, e-mail, etc.) a written confirmation thereof over the authorized signature of the Bidder must be received by the County at the address to which original Bids are to be submitted within three (3) calendar days after issue of the electronic message. Following withdrawal of its bid, the Bidder may submit a new bid, providing delivery is affected prior to the established bid opening date and time. **No bid may be withdrawn after bid due date for sixty (60) calendar days.**

F. **Bid and Contract Security**

A Bid Bond for an amount equal to five percent (5%) of the bid amount must accompany each Proposal. The bid bond shall be submitted in a separate, sealed envelope marked "Bid Bond".

Bids must be accompanied by a bid bond or certified check in an amount of five percent (5%) of the TOTAL AMOUNT of the base bid. The bid bond or certified check shall apply ONLY TO THIS BID. The bid name and contract number must appear on the security instrument. The bond must remain in full force and effect until the Bidder executes the final Contract. Bids not satisfying the bonding requirements of this project will be declared non-responsive.

Any bid bond, performance bond, payment bond, or security deposit required for public works construction contract shall be approved and filed with purchasing agent. At the option of the County, if the surety named in the bond is other than a surety company authorized by law to do business in this state pursuant to a current certificate of authority to transact surety business by the Commissioner of Insurance, such bond shall not be approved and filed unless such surety is on the United States Department of Treasury's list of approved bond sureties.

A Purchasing Agent shall approve as to form and as to the solvency of the surety any bid bond, performance bond, or payment bond required by this. In the case of a bid bond, such approval shall be obtained prior to acceptance of the bid or proposal. In the case of payment bonds and performance bonds, such approval shall be obtained prior to the execution of the contract.

Whenever, in the judgment of the County:

(1) Any surety on a bid, performance, or payment bond has become insolvent;
(2) Any corporation surety is not longer certified or approved by the Commissioner of Insurance to do business in the state; or
(3) For any cause there are no longer proper or sufficient sureties on any or all the bonds

The County may require the contractor to strengthen any or all of the bonds or to furnish a new or additional bond or bonds within ten days. Thereupon, if so ordered by the County, all work on the contract shall cease unless such new or additional bond or bonds are furnished. If such bond or bonds are not furnished within such time, the County may terminate the contract and complete the same as the agent of and at the expense of the contractor and his or her sureties.

As a condition of responsiveness the bidder must contain a Bid Bond for an amount equal to 5% of the bid amount. The Bid Bond shall be included in a separate envelope marked on the outside "Bid Bond". Checks or letters of credit of any type will not be accepted. A certified cashier's check will be acceptable. Provide a completed and fully executed Bid Bond. When the bidder's package is opened, a purchasing agent will verify the presence of the Bid Bond and remove it from the Proposal Package.

If the bidder withdraws its bid from the competition after the selection of its bid for a reason not authorized by Georgia law, the County will proceed on the Bid Bond, along with any other available remedies.

The Surety of the Bid Bond shall be from a surety company authorized to do business in the State of Georgia, shall be listed in the Department of Treasury Circular 570, and shall have an underwriting limitation in excess of 100% of the bid amount. The Bonds and Surety shall be subject to approval by the County Attorney.

Attorneys-in-fact for bidders who sign bid bonds or contract bonds must file with each bond a certified and effectively dated copy of their power of attorney.

G. Right to Reject Bids

The County reserves the right to reject any or all bids and to waive informalities. No bids will be received after the time set for opening bids. Any unauthorized conditions, limitations or provisions attached to the Bid, except as provided herein, will render it informal and may cause its rejection. Unbalanced bids will be subject to rejection. Any bidder may withdraw his/her bid, either personally or by telegraphic or written request, at any time prior to the scheduled closing time for receipt of bids. Telegraphic or written requests for withdrawal must be in the possession of the County prior to the closing time for receipt of bids.

H. Applicable Laws

All applicable laws and regulations of the State of Georgia and ordinances and regulations of Fulton County shall apply. Protestors shall seek resolution of their complaints in the manner provided in the Fulton County Code of Laws §2-324, which is incorporated by reference herein.

I. Examination of Contract Documents

Prospective bidders shall examine the contract documents and before submitting a bid, shall make a written request to the County for an interpretation or correction of any ambiguity, in consistency or error therein which could be discovered by a bidder. At the bid opening each bidder shall be presumed to have read and be familiar with the contract documents.

J. Indemnification and Hold Harmless Agreement

See Section 00490, Insurance and Risk Management Provisions page 3, Indemnification and Hold Harmless Agreement

K. Bid Opening

Bids will be opened in public and read aloud. All bidders are requested to be present at the opening.

L. Determination of Successful Bidder

Fulton County desires to complete this work in a timely manner. The Contract will be awarded to the lowest responsive, responsible bidder(s), if awarded.

1. **Responsibility:** The determination of the bidder's responsibility will be made by the County based on whether the bidder meets the following minimum requirements:

    a. The County reserves the right to reject any bid if the evidence submitted by, or investigation of, the bidder fails to satisfy the County that he/she is properly qualified to carry out the obligations of the Contract.
    b. Maintains a permanent place of business individually or in conjunction with the prime contractor.
    c. Has the appropriate and adequate technical experience. Designated Project Manager must be proficient in all aspects of contracted work.
    d. Has adequate personnel and equipment to do the work expeditiously.
    e. Has suitable financial means to meet obligations incidental to the work.

2. **Responsiveness:** The determination of responsiveness will be made by the County based on a consideration of whether the bidder has submitted a complete Bid form without irregularities, excisions, special conditions, or alternative bids for any item unless specifically requested in the Bid form.

M. Georgia Utility Contractors License *(APPLICABLE)*

Bidders must have a Utility Contractors License to perform this work in accordance with O.C.G.A. §43-14-8.3 (h). Bids for utility contracting projects must be from a licensed utility contractor and that licensed contractor must be the prime on the project. It is not permissible for an unlicensed individual/firm to subcontract with a licensed utility contractor. Bidders must complete Form C1: Georgia Utility License Certification in Section III, Purchasing Forms. The Bidder shall provide a Georgia Utility License Number on the outside of the sealed envelope. **Failure to provide the required license shall deem your bid non-responsive.**

General Contractors License (*APPLICABLE)*
Effective July 1, 2008, general contractors are required to be licensed by the State of Georgia to perform the following work ; construction; construction management services; or design-build services as a prime contractor, joint venture partner, or as a subcontractor to a design professional acting as prime contractor as part of a design-build entity or combination. Bidders must complete Form C2: Georgia General Contractors License Certification in Section III, Purchasing Forms. **Failure to provide the required license shall deem your bid non-responsive.**

N. Professional Licences *(NON-APPLICABLE)*

The State of Georgia requires that the following professions are required by state law to be licensed:

1. Electricians
2. Plumbers
3. Conditioned Air Contractors
4. Low voltage Contractors

Bidders and any sub-contractors performing any of the above described work must provide a copy of their license for the work they will perform on this project. Bidders must complete Form C3: Georgia Professional License Certification in Section III, Purchasing Forms. **Failure to provide the required license may deem your bid non-responsive.**

O. Wage Clause

Pursuant to 102-391, Each Contractor shall agree that in the performance of the Contract he will comply with all lawful agreements, if any, which the Contractor had made with any association, union, or other entity, with respect to wages, salaries, and working conditions, so as not to cause inconvenience, picketing, or work stoppage.

P. Notice of Award of Contract

As soon as possible, and within sixty (60) days after receipt of bids, the County shall notify the successful Bidder of the Award of Contract.

The award shall be made by the Board of Commissioners of Fulton County to the lowest responsive, responsible bidder(s) as soon as possible after receipt of bids, taking into consideration price and the responsiveness to the requirements set forth in the Invitation for Bid. In such case, no claim shall be made by the selected Contractor(s) for loss of profit if the contract is not awarded or awarded for less work than is indicated and for less than the amount of his bid. The total of the awarded contract shall not exceed the available funds allocated for this project.

Should the County require additional time to award the contract, the time may be extended by mutual agreement between the County and the successful bidder. If an Award of Contract has not been made within sixty (60) days from the bid date or within the extension mutually agreed upon, the Bidder may withdraw the Bid without further liability on the part of either party.

Any award made by the Board of Commissioners as a result of this bid will begin from the date of the notice to proceed. The Bidder agrees hereby to commence work under this Contract, with adequate personnel and equipment, on a date to be specified in a written order from the user department. The contract shall become effective on the Contract Date and shall continue in effect until the end of the term of the contract or until the project has been closed-out unless earlier terminated pursuant to the termination provisions of the contract.

Q. Execution of Contract Documents

Upon notification of Award of Contract, the County shall furnish the Contractor the conformed copies of Contract Documents for execution by the Contractor and Contractor's surety.

Within ten (10) days after receipt the Contractor shall return all the documents properly executed by the Contractor and the Contractor's surety. Attached to each document shall be an original power-of-attorney for the person executing the bonds for the surety and certificates of insurance for the required insurance coverage.

After receipt of the documents executed by the Contractor and his surety with the power-of-attorney and certificates of insurance, the County shall complete the execution of the documents. Distribution of the completed documents will be made upon completion.

Should the contractor and/or surety fail to execute the documents within the time specified, the County shall have the right to proceed on the Bid Bond accompanying the bid.

If the County fails to execute the documents within the time limit specified, the Contractor shall have the right to withdraw the Contractor's bid without penalty.

Should an extension of any of the time limits stated above be required, this shall be done only by mutual agreement between both parties.

Any agreement or contract resulting from the acceptance of a bid shall be on a County approved document form. The County reserves the right to reject any agreement that does not conform to the Invitation for Bid and any County requirements for agreements and contracts. The County reserves the right to modify the agreement resulting from this bid upon the recommendation of the County Attorney.

R. **Joint Venture**

Any Bidder intending to respond to this solicitation as a joint venture must submit an executed joint venture agreement with its offer. The agreement must designate those persons or entities authorized to execute documents or otherwise bind the joint venture in all transactions with Fulton County, or be accompanied by a document, binding upon the joint venture and its constituent members, making such designation. Offers from joint ventures that do not include these documents will be rejected as being non-responsive.

S. **Contractors Compliance With All Assurances And/Or Promises Made In Response To Procurement**

Should any Bidder submit a response to the County promising to provide a certain level of service for either the scope of work, MFBE participation, or any other matter, including where such promise or assurance is greater than what is required by the procurement documents, and should this response containing the promise or assurance be accepted by the County and made a part of the Contract Documents, then this degree or level of service promised by the bidder relating to the scope of work, MFBE participation, or other matter shall be considered to be a material part of the Agreement between the bidder and the County, such that the bidder's failure to provide the agreed upon degree or level of service or participation shall be a material breach of the Agreement giving the County just cause to terminate the Agreement for cause, pursuant to the General Conditions of the Agreement.

V. **Georgia Security and Immigration Compliance Act**

(1) Effective as of July 1, 2007, and pursuant to O.C.G.A. 13-10-91, every public employer, every contractor of a public employer, and every subcontractor of a public employer's contractor must register and participate in a federal work authorization program as follows:

(a) No public employer shall enter into a contract for the physical performance of services within this state unless the contractor registers and participates in a federal work authorization program to verify the work eligibility information all new employees.

(b) No contractor or subcontractor who enters into a contract with a public employer shall enter into such a contract or subcontract in connection with the physical performance of services within this state unless such contractor or subcontractor registers and participates in a federal work authorization program to verify the work eligibility information of all new employees.

(2) In accordance with O.C.G.A. 13-10-91, the requirements of paragraphs (a) and (b) of paragraph (1) shall apply to public employers, their contractors and subcontractors, as follows:

(a) On or after July 1, 2007, to public employers, contractors, or subcontractors of 500 or more employees;

(b) On or after July 1, 2008, to public employers, contractors or subcontractors of 100 or more employees; and

(c) On or after July 1, 2009, to all other public employers, their contractors, or subcontractors.

See Section 00420, Purchasing Forms & Instructions for declarations and affidavits.

W**.** **Bid General Requirements**

The following information pertains to the submission of a Bid to Fulton County, and contains instructions on how Bids must be presented in order to be considered. Listed below are the requirements for all Bidders interested in doing business with Fulton County.

1. The Bid sheets included in this Invitation to Bid ("Bid") must be fully completed and returned with the Bid unless otherwise specified in writing by the Purchasing Department. Type or neatly print the date, company name, and the full legal name and title of the person(s) signing the Bid in the place provided at the bottom of each Bid sheet. Any additional sheets submitted must contain the same signature and Bidder information.

2. All signatures must be executed by person(s) having contracting authority for the Bidder.

3. Absolutely no fax Bids or reproduction Bids will be accepted, except that photocopies may be submitted in addition to the original when multiple copies of the Bid are specifically requested in the solicitation.

4. The envelope in which the Bid response is submitted must be sealed and clearly labeled with the Bid number, project title, due date and time, and the name of the company or individual submitting the proposal. Bids must be received by the opening date and time shown on this Bid in order to be considered. The Purchasing Agent has no obligation to consider Bids which are not in properly marked envelopes. Contract Compliance submittals shall be submitted in a separate sealed envelope or package.

5. The original and the required number of copies of the Bid must be returned to:

   Fulton County Purchasing Agent
   Fulton County Department of Purchasing and Contract Compliance
   130 Peachtree Street, S.W., Suite 1168
   Atlanta, Georgia 30303

   Any inquiries, questions, clarifications or suggestions regarding this solicitation should be submitted in writing to the Purchasing Contact Person. Contact with any other County personnel in regard to a current solicitation is strictly prohibited in accordance with Fulton County "No Contact Provision" policy outlined in S35 and in Section 00020, Invitation to Bid.

6. Show information and prices in the format requested. Prices are to be quoted F.O.B. Destination, and must include all costs chargeable to the Contractor executing the Contract, including taxes. Unless otherwise provided in the Contract, Fulton County shall have no liability for any cost not included in the price. The Contractor shall provide Fulton County the benefit through a reduction in price of any decrease in the Contractor's costs by reason of any tax exemption based upon Fulton County's status as a tax-exempt entity.

7. All prices Bid must be audited by the Bidder to ensure correctness before the Bid is submitted. The Bidder is solely responsible for the accuracy of information placed on a Bid sheet, including prices. Clerical or mathematical error is insufficient to void a successful Bid but a Bidder may withdraw a sealed Bid prior to opening without a penalty.

8. All prices must be submitted in the format requested and less all trade discounts. When multiple items are being Bid, Bidder must show both the unit price and the total extended price for each item. When applicable, the Bidder must include an additional lump sum Bid for groups or items. In the event a Bidder is offering an additional discount on groups of items, Bidder must indicate the total lump sum Bid for the particular group of items before any extra discount, the amount of extra discount, and the net total for the particular group. In the event of an extension error, unit pricing shall prevail.

9. By submitting a signed Bid, Bidder agrees to accept an award made as a result of that Bid under the terms and conditions spelled out in the Bid documents. In the event of a conflict between the different Bid documents, the County's cover Contract (if used) shall have precedence, followed in order by the Invitation to Bid, Purchase Order, Bid, Contractor's Warranty Agreement, Maintenance Agreement, and/or other Contractor provided agreements.

10. A Bidder may submit only one (1) Bid response for each specific Bid solicitation unless otherwise authorized in the specifications.

11. All prices submitted by the Bidder to Fulton County must be guaranteed by the authorized person(s) against any price increase for the time period designated in the Bid specifications, and Fulton County must be given the benefit of any price decrease occurring during such designated time period.

12. All items Bid must be new. Used, rebuilt and refurbished items will not be considered unless specifically authorized by Fulton County in the written specifications.

13. All Bidders must specify in the Bid response the earliest actual delivery date for each item unless otherwise specified in writing by Fulton County. The delivery date may be a factor in deciding the Bidder's capability to perform.

14. A successful Bidder's delivery ticket(s) and invoice(s) must list each item separately and must show Fulton County's purchase order number as well as the proper department and address to which delivery was made, as listed on the purchase order or in the Bidder's contract with Fulton County.

15. Unless clearly shown as "no substitute" or words to that effect, any items in this invitation to Bid which have been identified, described or referenced by a brand name or trade name are for reference only. Such identification is intended to be descriptive but not restrictive, and is to indicate the general quality and characteristics of products that may be offered. Each item Bid must be individually identified as to whether it is a specified item or an equivalent item by typing or printing after the item(s): The brand name; model or manufacturer's number, or identification regularly used in the trade. Deviations from the specifications must be clearly and fully listed on the Bid sheet, including photographs or cuts, specifications, and dimensions of the proposed "alternate". Fulton County is the sole judge of "exact equivalent", or "alternate". The factors to be considered are: function, design, materials, construction, workmanship, finishes, operating features, overall quality, local service facilities, warranty terms and service, and other relevant features of item(s) Bid.

16. For all Bids, Fulton County reserves the right to request representative samples. If requested, samples must be delivered at the Bidder's cost within three (3) business days. Samples are submitted at the risk of the Bidder and may be subjected to destructive tests by Fulton County. Samples must be plainly tagged with Fulton County's Bid number, item name, manufacturer, and the name of the Bidder.

17. Item(s) Bid must be complete and ready to operate. No obvious omissions of components or necessary parts shall be made even though the specifications may not detail or mention them. Unit(s) must be furnished with factory installed equipment and must be comparable with the basic form, fit, and functional requirements which are all to be included in the base price as well as any other equipment included as standard by the manufacturer or generally provided to the buying public.

18. All successful Bidders must assume full responsibility for all item(s) damaged prior to F.O.B. Destination delivery and agree to hold harmless Fulton County of all responsibility for prosecuting damage claims.

19. All successful Bidders must assume full responsibility for replacement of all defective or damaged goods within thirty (30) days of notice by Fulton County of such defect or damage.

20. All successful Bidders must assume full responsibility for providing or ensuring warranty service on any and all items including goods, materials, or equipment provided to the County with warranty coverage. If a successful Bidder is not the manufacturer, all manufacturers'

warranties must be passed through to Fulton County. The Bidder and not Fulton County is responsible for contacting the manufacturer of the warranty service provided during the warranty period and supervising the completion of the warranty service to the satisfaction of Fulton County.

21. As a successful Bidder providing any equipment which requires fitting and assembly, the Bidder shall be solely responsible for such installation being performed by a manufacturer's authorized or approved servicer or an experienced worker, utilizing workmanship of the highest caliber. The Bidder must verify all dimensions at the site, shall be responsible for their correctness, and shall be responsible for the availability of replacement parts when specified in writing by Fulton County in the specifications, purchase order, or other contract.

22. A successful Bidder is solely responsible for disposing of all wrappings, crating, and other disposable material upon deliver of item(s).

23. All Bidders are required to be authorized distributors or regularly engaged in the sale or distribution of the type of goods, materials, equipment or services for which the Bidder is submitting a Bid response in addition, all Bidders are required to provide Fulton County with three (3) written references documenting the successful completion of Bids or contracts for the types of items including goods, materials, equipment, or services for which the Bidder is submitting a Bid response. In instances where a Bidder has never supplied such goods, material, equipment, or services before, the Bidder must submit with the Bid response a statement and supporting documentation demonstrating such expertise, knowledge, or experience to establish the Bidder as a responsible Bidder, capable of meeting the Bid requirements should an award be made. No exceptions to this provision will be made unless authorized in the Bid specifications.

24. Bidders may be required to furnish evidence that they maintain permanent places of business of a type and nature compatible with their Bid proposal, and are in all respects competent and eligible vendors to fulfill the terms of the specifications. Fulton County may make such investigations as it deems necessary to determine the ability of the Bidder to perform such work, and reserves the right to reject any Bidder if evidence fails to indicate that the Bidder is qualified to carry out the obligation of the Contract and to complete the work satisfactorily.

25. All Bidders must comply with all Fulton County Purchasing laws, policies, and procedures, non-discrimination in contracting and procurement ordinances, and relevant state and federal laws including but not limited to compliance with EEOC hiring guidelines and requirements under the Americans with Disabilities Act. Successful Bidder must obtain all permits, licenses, and inspections as required and furnish all labor, materials, insurance, equipment, tools, supervision, and incidentals necessary to accomplish the work in these specifications.

26. If a successful Bidder is unable or unwilling to enter into a Contract with Fulton County subsequent to being granted an award, or who fails to perform in accordance with the Bid specifications the Bidder will be subject to damages and all other relief allowed by law.

27. Successful Bidders contract directly with Fulton County and are the party or parties obligated to perform. Contracts may not be assigned and any failure to perform the Contract in accordance with the specifications will constitute a breach of Contract and may result in a Bidder being found to be "non-responsive" in the future.

28. In case of default by the successful Bidder, Fulton County may procure the articles for services from another source and hold the successful Bidder responsible for any resulting excess cost.

29. The County may award any Bid in whole or in part to one or more vendors or reject all Bids and/or waive any technicalities if it is in the best interests of the County to do so. In the event that all Bids are not rejected, Bids for items including goods, materials, equipment, and

services will be awarded to the lowest "responsible" Bidder(s) as determined by Fulton County. Submitting the lowest Bid, as published at the Bid opening, does not constitute an award or the mutual expectation of an award of a Contract and purchase order. For purposes of this notice and the attached Bid sheets, a purchase order is a Contract to provide items including goods, materials, equipment, and services and is intended to have the full force and effect of a Contract. A breach of the terms and conditions of a purchase order constitutes a breach of Contract.

30. Bids for projects that are solicited pursuant to the Georgia Local Government Public Works Construction Law (O.C.G.A. § 36-91-1 et seq.) may withdrawn as follows:

    Competitive sealed Bids ("Bid") may not be revoked or withdrawn until 60 days after the time set by the governmental entity for opening of Bids. At the end of this time period, the Bid will cease to be valid, unless the Bidder provides written notice to the County prior to the scheduled expiration date that the Bid will be extended for a time period specified by the County.

31. In the evaluation of the Bids, any award will be subject to the Bid being:

    a. Compliant to the specification – meets form, fit, and function requirements stated or implied in the specification.
    b. Lowest cost to the County over projected useful life.
    c. Administratively Compliant – Including all required bonds, insurance, established quality of work and general reputation, financial responsibility, relevant experience, and related criteria.

32. All proposals and Bids submitted to Fulton County are subject to the Georgia "Open Records Act", Official Code of Georgia, Annotated (O.C.G.A.) §50-18-70 et seq.

33. All proposals and Bids submitted to Fulton County involving Utility Contracting are subject to the Georgia law governing licensing of Utility Contractors, O.C.G.A. §43-14-8.2(h). The Utility Contractor License number of the person who will perform the utility work shall be written on the face of the Bid envelope.

34. The apparent silence of this specification, and any supplement thereto, as to details, of the omission from it of a detailed description concerning any point, will be regarded as meaning only the best commercial practices are to prevail. Only materials of the highest quality, correct type, size, and design are to be used. All interpretations of this specification will be made upon the basis of this statement, with Fulton County interpretation to prevail.

35. It is the policy of Fulton County that the evaluation and award process for County contracts shall be free from both actual and perceived impropriety, and that contacts between potential vendors and County officials, elected officials and staff regarding pending awards of County contracts shall be prohibited.

    a. No person, firm, or business entity, however situated or composed, obtaining a copy of or responding to this solicitation, shall initiate or continue any verbal or written communication regarding this solicitation with any County officer, elected official, employee, or designated County representative, between the date of the issuance of this solicitation and the date of the County Manager's recommendation to the Board of Commissioners for award of the subject contract, except as may otherwise be specifically authorized and permitted by the terms and conditions of this solicitation.

    b. All verbal and written communications initiated by such person, firm, or entity regarding this solicitation, if same are authorized and permitted by the terms and conditions of this solicitation, shall be directed to the Purchasing Agent.

c. Any violation of this prohibition of the initiation or continuation of verbal or written communications with County officers, elected officials, employees, or designated County representatives shall result in a written finding by the Purchasing Agent that the submitted Bid or proposal of the person, firm, or entity in violation is “non-responsive”, and same shall not be considered for award.

36. Any Bidder intending to respond to this solicitation as a Joint Venture must submit an executed Joint Venture Agreement with this Bid. This agreement must designate those persons or entities authorized to execute documents or otherwise bind the Joint Venture in all transactions with Fulton County, or are accompanied by a document, binding upon the Joint Venture and its constituent members, making such designation. Bids from Joint Ventures that do not include these documents will be rejected as being “non-responsive”.

37. Any Bidder intending to respond to this solicitation must complete all of the Procurement Affidavit Forms provided in this solicitation. Bids that do not include these completed documents will be rejected as being “non-responsive”.

Required Bid Submittal Check List for Invitation To Bid (ITB)

The following submittals shall be completed and submitted with each bid (see table below "Required Bid Submittal Check List."). **Please check to make sure that the required submittals are in the envelope before it is sealed. Failure to submit all required submittals may deem your proposal non-responsive.**

Submit one (1) Original bid, signed and dated and three (3) **complete** copies of the Original Bid including all required documents.

Item #	Required Bid Submittal Check List	Check (√)
1	Bid Form (Section II) – All dollar amounts must be both in writing AND figures and represent prices for the published scope of work without exceptions.	
2	Acknowledgement of each Addendum (acknowledged both on the Bid Form, Section II, and on the form included with each addendum).	
3	Bid Bond (Section II) (separate envelope if Public Works Construction project)	
4	Purchasing Forms (Section III) Form A - Non-Collusion Affidavit of Prime Bidder/Offeror Form B - Certificate of Acceptance of Request for Bid/Proposal Requirements Form C1- Georgia Utility Contractor License ***(Applicable)*** Form C2- Georgia General Contractors License ***(Applicable)*** Form C3- Georgia Professional Licenses ***(Non Applicable)*** Form D - Certificate Regarding Debarment Form E - Disclosure Form & Questionnaire Form F - Declaration of Employee-Number Categories Form G - Georgia Security and Immigration Contractor Affidavit and Agreement Form H - Georgia Security and Immigration Subcontractor Affidavit	
5	Office of Contract Compliance Requirements (Section IV) Exhibit A - Promise of Non-Discrimination (for Prime and each Sub) Exhibit B - Employment Record (for Prime and each Sub) Exhibit C - Schedule of Intended Subcontractor Utilization Exhibit D - Letter of Intent to Perform as Subcontractor Exhibit E - Declaration Regarding Subcontractor Practices Exhibit F - Joint Venture Disclosure Affidavit Exhibit G - Prime Contractor/Subcontractor Utilization Report Equal Business Opportunity Plan (EBO Plan)	
6	Risk Management Insurance Provisions Form (Section V) and proof of insurance, either letter from insurer or Certificate of Insurance.	

END OF SECTION

SECTION II: BID DOCUMENTS

PRICE QUOTE

Bidder shall utilize the following to submit price quote

PAY ITEM	TOTAL QTY.	UNIT	DESCRIPTION	UNIT COST	TOTAL COST
ROADWAY ITEMS					
150-1000	LS	LUMP	TRAFFIC CONTROL – STP-000-00 (189)		
210-0100	LS	LUMP	GRADING COMPLETE – STP-000-00(189)		
310-1101	813	TN	GR AGGR BASE CRS, INCL MATL		
402-3131	52	TN	RECYCLED ASPH CONC 12.5 MM SUPERPAVE, GP 2 ONLY, INCL BITUM MATL AND H - LIME		
402-3190	12	TN	RECYCLED ASPH CONC 19 MM SUPERPAVE, GP 1 OR 2, INCL BITUM MATL AND H - LIME		
441-0014	2274	SY	DRIVEWAY CONCRETE, 4 IN THK		
441-0104	9930	SY	CONC SIDEWALK, 4 IN		
441-0740	1268	SY	CONCRETE MEDIAN, 4 IN		
441-4020	2298	SY	CONC VALLEY GUTTER, 6 IN		
441-4030	283	SY	CONC VALLEY GUTTER, 8 IN		
441-6012	5000	LF	CONC CURB & GUTTER, 6 IN X 24 IN, TP2		
444-2000	300	LF	SAWED JOINTS IN EXIST PAVEMENTS – PCC		
500-3107	310	CY	CLASS A CONCRETE, RETAINING WALL		
500-9999	5	CY	CLASS B CONC, BASE OR PVMT WIDENING		
511-1000	30175	LB	BAR REINF STEEL		
515-1000	203	LF	FERROUS METAL HANDRAIL, SPCL DESIGN		
515-2020	515	LF	GALV STEEL PIPE HANDRAIL, 2 IN, ROUND		
607-1000	525	CY	MORTAR RUBBLE MASONRY		

PAY ITEM	TOTAL QTY.	UNIT	DESCRIPTION	UNIT COST	TOTAL COST
634-1200	196	EA	RIGHT OF WAY MARKER		
DRAINAGE ITEMS					
550-1150	23	LF	STORM DRAIN PIPE, 15 IN, H 1-10		
550-2150	70	LF	SIDE DRAIN PIPE, 15 IN ,H 1-10		
550-4115	6	EA	FLARED END SECTION 15 IN SIDE DRAIN		
611-3000	10	EA	RECONSTRUCT CATCH BASIN, GROUP I		
611-9000	1	EA	CAPPING MINOR STRUCTURE		
668-1105	2	EA	CATCH BASIN, GP 1, SPCL DES		
668-2100	1	EA	DROP INLET, GP 1		
668-5000	1	EA	JUNCTION BOX		
TRAFFIC SIGNS AND MARKING					
611-5360	31	EA	RESET HIGHWAY SIGNS		
636-1020	48	SF	HIGHWAY SIGNS, TP 1 MATL, REFL SHEETING TP 3		
636-1031	60	SF	HIGHWAY SIGNS, TP 1 MATL, REFL SHEETING TP 6		
636-2070	122	LF	GALV STEEL POSTS, TP 7		
636-2090	102	LF	GALV STEEL POSTS, TP 9		
653-1704	200	LF	THERMOPLASTIC SOLID TRAF STRIPE, 24 IN, WHITE		
653-1804	2500	LF	THERMOPLASTIC SOLID TRAF STRIPE, 8 IN, WHITE		
653-6004	66	SY	THERMOPLASTIC TRAF STRIPING, WHITE		
EROSION					
163-0232	3	AC	TEMPORARY GRASSING		

PAY ITEM	TOTAL QTY.	UNIT	DESCRIPTION	UNIT COST	TOTAL COST
163-0240	80	TN	MULCH		
165-0010	4715	LF	MAINTENANCE OF TEMPORARY SILT FENCE, TP A		
165-0030	1100	LF	MAINTENANCE OF TEMPORARY SILT FENCE, TP C		
167-1000	2	EA	WATER CONTROL MONITORING AND SAMPLING		
167-1500	18	MO	WATER QUALITY INSPECTIONS		
171-0010	9430	LF	TEMPORARY SILT FENCE, TYPE A		
171-0030	2200	LF	TEMPORARY SILT FENCE, TYPE C		
700-6910	6	AC	PERMANENT GRASSING		
700-7000	17	TN	AGRICULTURAL LIME		
700-7010	14	GL	LIQUID LIME		
700-8000	6	TN	FERTILIZER MIXED GRADE		
700-8100	275	LB	FERTILIZER NITROGEN CONTENT		
700-9300	9700	SY	SOD		
716-2000	23596	SY	EROSION CONTROL MATS, SLOPES		
LANDSCAPE/TREE PROTECTION					
643-8200	6900	LF	BARRIER FENCE (ORANGE), 4 FT		
702-0052	208	EA	ANDROPOGON VIRGINICUS		
702-0257	242	EA	EUONYMUS FORTUNEI		
702-0330	619	EA	HEMEROCALLIS SPECIES		
702-0470	337	EA	ILEX VOMITORIA		
702-0500	402	EA	JUNIPERUS CONFERTA		

PAY ITEM	TOTAL QTY.	UNIT	DESCRIPTION	UNIT COST	TOTAL COST
702-0570	407	EA	LIRIOPE SPICATA		
702-9005	113	LBS	SPRING APPLICATION FERTILIZER		
702-9020	2939	SY	MULCH		
708-1000	220	CY	PLANT TOPSOIL		
BRIDGE QUANTITIES					
211-0300	97	CY	BRIDGE EXCAVATION, STREAM CROSSING		
310-1101	135	TN	GR AGGR BASE CRS, INCL MATL		
500-3101	35	CY	CLASS A CONCRETE		
511-1000	3084	LB	BAR REINF STEEL		
534-1000	LUMP	LS	PEDESTRIAN OVERPASS BRIDGE, STA 11+63		
603-2024	55	SY	STN DUMPED RIP RAP, TP1, 24 IN		
603-7000	55	SY	PLASTIC FILTER FABRIC		
WATER ITEMS					
611-8120	24	EA	ADJUST WATER METER BOX TO GRADE		
670-9710	3	EA	RELOCATE EXIST FIRE HYDRANT		
670-9730	38	EA	RELOCATE EXIST WATER METER INCL BOX		
702-0001	LUMP	Allow	MISC LANDSCAPING	$100,000.00	$100,000.00
	LUMP	Allow	TESTING ALLOWANCE	$15,000.00	$15,000.00
			BASE BID AMOUNT		

BIDDERS SHALL ENTER ALL UNIT PRICES, MAKE ALL EXTENSIONS, AND TOTAL THE BID

The Bidder agrees hereby to commence work under this Contract, with adequate personnel and equipment, on a date to be specified in a written order of the Contracting Officer and to fully complete all work under this Contract within **Ninety (90) Available Days** from and including said date.

The Bidder declares that he understands that the quantities shown for the unit prices items are subject to either increase or decrease, and that should the quantities of any of the items of work be increased, the Bidder proposes to do the additional work at the unit prices stated herein; and should the quantities be decreased, the Bidder also understands that payment will be made on the basis of actual quantities at the unit price bid and will make no claim for anticipated profits for any decrease in quantities; and that actual quantities will be determined upon completion of work, at which time adjustments will be made to the contract amount by direct increase or decrease.

In case of discrepancies between the figures shown in the unit prices and the totals, the unit prices shall apply and the totals shall be corrected to agree with the unit prices. In case of discrepancies between written amounts and figures, written amounts shall take precedence over figures and the sum of all Bid extensions (of unit prices) plus lump sum items shall take precedence over BID TOTAL.

The Bidder furthermore agrees that, in the case of a failure on his part to execute the Contract Agreement and Bonds within ten (10) days after receipt of conformed contract documents for execution, the Bid Bond accompanying his bid and the monies payable thereon shall be paid into the funds of the Owner as liquidated damages for such failure.

Enclosed is a Bid Bond in the approved form, in the sum of:_____

_____Dollars ($_____

_____) according to the conditions of "Instructions to Bidders" and provisions thereof.

The undersigned acknowledges receipt of the following addenda (list by the number and date appearing on each addendum) and thereby affirms that its Bid considers and incorporates any modifications to the originally issued Bidding Documents included therein.

ADDENDUM # _____DATED _____

ADDENDUM # _____DATED _____

ADDENDUM # _____DATED _____

ADDENDUM # _____DATED _____

BIDDER: _____

By: _____
[Name Typed or Printed]

_____
[Name Signed]

Title: _____

Business Address: _____

_____

_____

Business Phone: _____

Bidder's Contractor License No: _____
[State/County]
License Expiration Date: _____

Note: If the Bidder is a corporation, the Bid shall be signed by an officer of the corporation; if a partnership, it shall be signed by a partner. If signed by others, authority for signature shall be attached.

The full name and addresses of persons or parties interested in the foregoing Bid, as principals, are as follows:

Name	Address

BID FORM

Submitted To: Fulton County Government

Submitted By: _____

For: **T243 REYNOLDS ROAD AT WESTLAKE PARKWAY INTERSECTION IMPROVEMENT**

Submitted on _____, 20__.

The undersigned, as Bidder, hereby declares that the only person or persons interested in the Bid as principal or principals is or are named herein and that no other person than herein mentioned has any interest in this Bid or in the Contract to be entered into; that this Bid is made without connection with any other person, company or parties making a Bid; and that it is in all respects fair and in good faith without collusion or fraud.

The Bidder further declares that he has examined the site of the work and informed himself fully in regard to all conditions pertaining to the place where the work is to be done; that he has examined the Drawings and Specifications for the work and contractual documents relative thereto, and has read all instructions to Bidders and General Conditions furnished prior to the openings of bids; that he has satisfied himself relative to the work to be performed.

The Bidder proposes and agrees, if this Bid is accepted, to contract with the Board of Commissioners of Fulton County, Atlanta, Georgia, in the form of contact specified, to furnish all necessary materials, equipment, machinery, tools, apparatus, means of transportation and labor necessary, and to complete the construction of the work in full and complete accordance with the shown, noted, and reasonably intended requirements of the Specifications and Contract Documents to the full and entire satisfaction of the Board of Commissioners of Fulton County, Atlanta, Georgia, with a definite understanding that no money will be allowed for extra work except as set forth in the attached General Conditions and Contract Documents for the following prices.

THE BASE BID TOTAL IS THE AMOUNT UPON WHICH THE BIDDER WILL BE FORMALLY EVALUATED AND WHICH WILL BE USED TO DETERMINE THE LOWEST RESPONSIBLE BIDDER. Please make sure that all line items below are accurately calculated and total up to this inclusive amount.

The bid may not be withdrawn or modified for a period of sixty (60) days following the receipt of bids.

BASE BID TOTAL, INCLUSIVE, THE AMOUNT OF:

$ _____

(Dollar Amount In Numbers)

_____

(Dollar Amount In Words)

Make sure that all line items below are accurately calculated and total up to the inclusive BASE BID TOTAL.

Method of Bidding
The unit or lump sum price for each of the several items in the Bid of each Bidder shall include its pro rata share of overhead and profit so that the sum of the products, obtained by multiplying the quantity shown for each item by the unit price, represents the total Bid. Any Bid not conforming to this requirement may be rejected. Additionally, Unbalanced Bids or conditional Bids will be subject to rejection. The special attention of all Bidders is called to this provision, for should conditions make it necessary to revise the quantities, no limit will be fixed for such increased or decreased quantities nor extra compensation allowed.

Furnishing all products, materials and equipment and performing all labor necessary to complete and put into operation the **T243 REYNOLDS ROAD AT WESTLAKE PARKWAY INTERSECTION IMPROVEMENT**, including all work shown on the Drawings and/or Specified below, the amount of:

_____

_____DOLLARS ($_____).

BID BOND

No bid for a contract in Fulton County for work to be done shall be valid for any purpose unless the Contractor shall give a Bid Bond with good and sufficient surety payable to, in favor of, and for the protection of Fulton County. The Bid Bond shall not be less than 5% of the total amount payable by the terms of the Contract. No bid shall be read aloud or considered if a proper bid bond has not been submitted.

Surety companies executing Bonds must appear on the Treasury Department's most current list (Circular 570 as amended) and be authorized to transact business in the State of Georgia.

Attestation for the corporation must be by the corporate officer; for a partnership by another partner; for an individual by a notary with the corporate seal.

BID BOND
T243 REYNOLDS ROAD AT WESTLAKE PARKWAY INTERSECTION IMPROVEMENT
FULTON COUNTY GOVERNMENT

KNOW ALL MEN BY THESE PRESENTS, THAT WE_____

_____

hereinafter called the PRINCIPAL, and _____

_____

hereinafter call the SURETY, a corporation chartered and existing under the laws of the State of _____and duly authorized to transact Surety business in the State of Georgia, are held and firmly bound unto the Fulton County Government (COUNTY), in the penal sum of __ _____Dollars and Cents ($_____) good and lawful money of the United States of America, to be paid upon demand of the COUNTY, to which payment well and truly to be made we bind ourselves, our heirs, executors, and administrators and assigns, jointly and severally and firmly by these presents.

WHEREAS the PRINCIPAL has submitted to the COUNTY, for **T243 Reynolds Road at Westlake Parkway Intersection Improvement,** a Bid;

WHEREAS the PRINCIPAL desires to file this Bond in accordance with law:

NOW THEREFORE: The conditions of this obligation are such that if the Bid be accepted, the PRINCIPAL shall within ten (10) calendar days after receipt of written notification from the COUNTY of the award of the Contract execute the Contract in accordance with the Bid and upon the terms, conditions and prices set forth therein, in the form and manner required by the COUNTY, and execute sufficient and satisfactory Performance and Payments Bonds payable to the COUNTY, each in the amount of one hundred percent (100%) of the total contract price, in form and with security satisfactory to said COUNTY, then this obligation to be void; otherwise, to be and remain in full force and virtue in law; and the SURETY shall upon failure of the PRINCIPAL to comply with any or all of the foregoing requirements within the time specified above immediately pay to the COUNTY, upon demand the amount hereof in good and lawful money of the United States of America, not as a penalty, but as liquidated damages.

In the event suit is brought upon this Bond by the COUNTY and judgment is recovered, the SURETY shall pay all costs incurred by the COUNTY in such suit, including attorney's fees to be fixed by the Court. Enclosed is a Bid Bond in the approved form, in the amount of _____ _____Dollars ($_____) being in the amount of five percent (5%) of the Contract Sum. The money payable on this bond shall be paid to the COUNTY, for the failure of the Bidder to execute a

Contract within ten (10) days after receipt of the Contract and at the same time furnish a Payment Bond and Performance Bond.

(SIGNATURES ON NEXT PAGE)

IN TESTIMONY THEREOF, the PRINCIPAL and SURETY have caused these presents to be duly signed and sealed this _____day of _____,_200__.

ATTEST:

_____
PRINCIPAL

_____ BY_____

(SEAL)

CERTIFICATE AS TO CORPORATE PRINCIPAL

I, _____, certify that I am the Secretary of the Corporation named as principal in the within bond; that _____, who signed the said bond of said corporation; that I know this signature, and his/her signature thereto is genuine; and that said bond was duly signed, sealed and attested for in behalf of said Corporation by authority of its governing body.

_____
SECRETARY

(CORPORATE SEAL)

_____
SURETY

_____ BY_____
(SEAL)

SECTION III: PURCHASING FORMS & INSTRUCTIONS

This section contains the procurement forms that are required to be executed and submitted with the bid package. This section does not contain all forms required to be included with the bid package submittal.

To be deemed responsive to this ITB, Bidders must provide the information requested and complete in detail all Purchasing Forms. The appropriate individual(s) authorized to commit the Bidder to the Project must sign the Purchasing Forms. Bidders should reproduce each Purchasing Form, as required, and complete the appropriate portions of the forms provided in this section.

- Form A: Non-Collusion Affidavit of Prime Bidder/Offeror
- Form B: Certificate of Acceptance of Request for Bid/Proposal Requirements
- Form C: Professional License Certifications
    - Form C1 – Georgia Utility License Contractor License ***(Applicable)***
    - Form C2 – Georgia General Contractors License ***(Applicable)***
    - Form C3 – Georgia Professional License ***(Non Applicable)***
- Form D: Certification Regarding Debarment
- Form E: Disclosure Form and Questionnaire
- Form F: Declaration of Employee-Number Categories
- Form G: Georgia Security and Immigration Contractor Affidavit and Agreement
- Form H: Georgia Security and Immigration Subcontractor Affidavit

FORM A: NON-COLLUSION AFFIDAVIT OF BIDDER/OFFEROR

STATE OF GEORGIA
COUNTY OF FULTON

I, _____ certify that pursuant to Fulton County Code Section 2-320 (11), this bid or proposal is made without prior understanding, agreement or connection with any corporation, firm or person submitting a bid for the same work, labor or service to be done or the supplies, materials or equipment to be furnished and is in all respects fair and without collusion or fraud. I understand collusive bidding is a violation of state and federal law and can result in fines, prison sentences and civil damages awards. I agree to abide by all conditions of this bid or proposal and certify that I am authorized to sign this bid or proposal for the bidder.

Affiant further states that pursuant to O.C.G.A. Section 36-91-21 (d) and (e), _____ has not, by itself or with others, directly or indirectly, prevented or attempted to prevent competition in such bidding or proposals by any means whatsoever. Affiant further states that (s)he has not prevented or endeavored to prevent anyone from making a bid or offer on the project by any means whatever, nor has Affiant caused or induced another to withdraw a bid or offer for the work.

Affiant further states that the said offer of _____ is bona fide, and that no one has gone to any supplier and attempted to get such person or company to furnish the materials to the bidder only, or if furnished to any other bidder, that the material shall be at a higher price.

_____
(COMPANY NAME)

_____
(PRESIDENT/VICE PRESIDENT)

Sworn to and subscribed before me this _____ day of _____, 200__.

_____
(SECRETARY/ASSISTANT SECRETARY)

(Affix corporate seal here, if a corporation)

Notary Public: _____

County: _____

Commission Expires: _____

NOTE:

IF THE OFFEROR IS A PARTNERSHIP, ALL OF THE PARTNERS AND ANY OFFICER, AGENT, OR OTHER PERSON WHO MAY HAVE REPRESENTED OR ACTED FOR THEM IN BIDDING FOR OR PROCURING THE CONTRACT SHALL ALSO MAKE THIS OATH.

IF THE OFFEROR IS A CORPORATION, ALL OFFICERS, AGENTS, OR OTHER PERSONS WHO MAY HAVE ACTED FOR OR REPRESENTED THE CORPORATION IN BIDDING FOR OR PROCURING THE CONTRACT SHALL MAKE THE OATH.

FORM B: FULTON COUNTY CERTIFICATE OF ACCEPTANCE OF BID/PROPOSAL REQUIREMENTS

This Is To Certify That On This Day Bidder/Proposer Acknowledges That He/She Has Read This Bid Document, Pages _____ To _____ Inclusive, Including Addendum(s) ___ To ___, And/Or Appendices To ___, In Its Entirety, And Agrees That No Pages Or Parts Of The Document Have Been Omitted, That He/She Understands, Accepts And Agrees To Fully Comply With The Requirements Therein, And That The Undersigned Is Authorized By The Bidding/Proposing Company To Submit The Bid/Proposal Herein And To Legally Obligate The Bidder/Proposer Thereto.

Company: _____

Signature: _____

Name: _____

Title: _____

Date: _____

(Corporate Seal)

FORM C1: CONTRACTOR'S GEORGIA UTILITY LICENSE CERTIFICATION

Contractor's Name: _____

Utility Contractor's Name: _____

Expiration Date of License: _____

I certify that the above information is true and correct and that the classification noted is applicable to the Bid for this Project.

Signed: _____

Date: _____

(ATTACH COPY OF LICENSE)

FORM C2: CONTRACTOR'S GEORGIA GENERAL CONTRACTOR'S LICENSE CERTIFICATION

Contractor's Name: _____

General Contractor's License Number: _____

Expiration Date of License: _____

I certify that the above information is true and correct and that the classification noted is applicable to the Bid for this Project.

Signed: _____

Date: _____

(ATTACH COPY OF LICENSE)

FORM C3: GEORGIA PROFESSIONAL LICENSE CERTIFICATION

NOTE: Please complete this form for the work your firm will perform on this project.

Contractor's Name: _____

Performing work as: Prime Contractor ____ Sub-Contractor _____

Professional License Type: _____

Professional License Number: _____

Expiration Date of License: _____

I certify that the above information is true and correct and that the classification noted is applicable to the Bid for this Project.

Signed: _____

Date: _____

(ATTACH COPY OF LICENSE)

FORM D: CERTIFICATION REGARDING DEBARMENT

(1) The Offeror certifies that neither it or its subcontractors is presently debarred, suspended, proposed for debarment, declared ineligible, or otherwise excluded from doing business with any government agency. Any such exclusion may cause prohibition of your firm from participating in any procurement by the Fulton County Government.

(2) If the Offeror is unable to certify to any of the statements in this certification, such Offeror or subcontractor shall attach an explanation to this bid or proposal.

INSTRUCTIONS FOR CERTIFICATION

By signing and submitting this certification, the Offeror is providing the certification set out below:

(1) The certification in this clause is a material representation of fact upon which reliance will be placed. If it is later determined that the prospective vendor knowingly rendered a false certification, the Purchasing Agent may pursue all available remedies, including suspension and/or debarment, for withdrawal of award or termination of a contract.

(2) The prospective Offeror shall provide immediate written notice to the Purchasing Agent if at anytime the Offeror learns that its certification was erroneous when submitted or has become erroneous by reason of changed circumstances.

(3) Offeror shall be under a continuing duty to immediately inform the Purchasing Agent in writing of any changes, if as a result of such changes, the Offeror certification regarding debarment is affected.

DEBARMENT ORDINANCE

The following Section 2-322 of Fulton County Code of Laws establishes the procedure for the debarment of contractors.

Authority to suspend.

After reasonable notice to the entity involved and reasonable opportunity for that entity to be heard, the Purchasing Agent, after consultation with user department, the County Manager and the County Attorney shall have the authority to suspend an entity for cause from consideration for award of county contracts. As used in this section, the term entity means any business entity, individual, firm, contractor, subcontractor or business corporation, partnership, limited liability corporation, firm, contractor, subcontractor or business structured; provided, further, that any such entity shall also be subject to suspension under this section if any of its constituents, members, subcontractors at any tier of such entity's and the entity, or any constituent or member, knew or should have known of the commission of the act. The suspension shall be for a period not to exceed three (3) years unless cause is based on a felony conviction for an offense related or associated with fraudulent contracting or misappropriation of funds wherein the suspension shall not exceed seven (7) years.

Causes for Suspension. The causes for suspension include:

(1) Conviction for commission of a criminal offense as an incident to obtain or attempting to obtain a public or private contract or subcontract, or in performance of such contract or subcontract;

(2) Conviction of state or federal statutes of embezzlement, theft, forgery, bribery, falsification or destruction of records, receiving stolen property or other offense indicating a lack of business integrity or business honesty which currently, seriously and directly affects responsibility as a county contractor.

(3) Conviction of state or federal anti-trust statues arising out of the solicitation and submission of bids and proposals;

(4) Violation of contract provisions, as set forth below, of a character which is regarded by the Purchasing Agent to be so serious as to justify suspension action:

a. Failure to perform in accordance with the specifications within a time limit provided in a county contract;

b. A recent record of failure to perform or unsatisfactory performance in accordance with the terms of one or more contracts; provided, that failure to perform or unsatisfactory performance caused by acts beyond the control of the contractor shall not be considered to be a basis for suspension;

c. Material representation of the composition of the ownership or workforce or business entity certified to the county as a minority business enterprise; or

d. Falsification of any documents.

(5) For violation of the ethical standards set forth in Fulton County Code Chapter 9, Code of Ethics.

(6) Knowing misrepresentation to the county, of the use which a majority owned contractor intends to make a minority business enterprise (a business entity at least 51 percent of which is owned and controlled by minority persons, as defined in Fulton County Code Chapter 6, Article B, Minority Business Enterprise Affirmative Action Program and certified as such by the County) as a subcontractor or a joint venture partner, in performing work under contract with the County.

Failure to fully and truthfully provide the information required, may result in the disqualification of your bid/proposal from consideration or termination of the Contract, once awarded. This document must be completed and included as a part of the bid/proposal package along with other required documents.

[SIGNATURES ON NEXT PAGE]

Under penalty of perjury, I declare that I have examined this certification and all attachments hereto, if applicable, to the best of my knowledge and belief, and all statements contained hereto are true, correct, and complete.

On this _____ day of _____, 200__

_____
(Legal Name of Offeror) (Date)

_____
(Signature of Authorized Representative) (Date)

_____
(Title)

FORM E: DISCLOSURE FORM AND QUESTIONNAIRE

1. Please provide the names and business addresses of each of the Offeror's firm's officers and directors.

   For the purposes of this form, the term "Offeror" means an entity that responds to a solicitation for a County contract by either submitting a proposal in response to a Request for Proposal or a Request for Qualification or a Bid in response to an Invitation to Bid.

   Describe accurately, fully and completely, their respective relationships with said Offeror, including their ownership interests and their anticipated role in the management and operations of said Offeror.

2. Please describe the general development of said Offeror's business during the past five (5) years, or such shorter period of time that said Offeror has been in business.

3. Please state whether any employee, agent or representative of said Offeror who is or will be directly involved in the subject project has or had within the last five (5) years: (i) directly or indirectly had a business relationship with Fulton County; (ii) directly or indirectly received revenues from Fulton County; or (iii) directly or indirectly receives revenues from the result of conducting business on Fulton County property or pursuant to any contract with Fulton County. Please describe in detail any such relationship.

LITIGATION DISCLOSURE:

Failure to fully and truthfully disclose the information required, may result in the disqualification of your bid or proposal from consideration or termination of the Contract, once awarded.

1. Please state whether any of the following events have occurred in the last five (5) years with respect to said Offeror. If any answer is yes, explain fully the following:

   (a) whether a petition under the federal bankruptcy laws or state insolvency laws was filed by or against said Offeror, or a receiver fiscal agent or similar officer was appointed by a court for the business or property of said Offeror;

   (b) whether Offeror was subject of any order, judgment, or decree not subsequently reversed, suspended or vacated by any court of competent jurisdiction, permanently enjoining said Offeror from engaging in any type of business practice, or otherwise eliminating any type of business practice; and

   (c) whether said Offeror's business was the subject of any civil or criminal proceeding in which there was a final adjudication adverse to said or Offeror, which directly arose from activities conducted by the business unit or corporate division of said Offeror which submitted a bid or proposal for the subject project. If so please explain.

2. Have you or any member of your firm or team to be assigned to this engagement been indicted or convicted of a criminal offense within the last five (5) years?

   Circle One: YES NO

3. Have you or any member of your firm or team ever been terminated (for cause or otherwise) from any work being performed for Fulton County or any other Federal, State or Local Government ?

Circle One: YES NO

4. Have you or any member of your firm or team been involved in any claim or litigation adverse to Fulton County or any other Federal, State or Local Government, or private entity during the last three (3) years?

Circle One: YES NO

5. Has any offeror, member of offeror's team, or officer of any of them (with respect to any matter involving the business practices or activities of his or her employer), been notified within the five (5) years preceding the date of this offer that any of them are the target of a criminal investigation, grand jury investigation, or civil enforcement proceeding?

Circle One: YES NO

If you have answered "YES" to any of the above questions, please indicate the name(s) of the person(s), the nature, and the status and/or outcome of the information, indictment, conviction, termination, claim or litigation, the name of the court and the file or reference number of the case, as applicable. Any such information should be provided on a separate page, attached to this form and submitted with your proposal.

NOTE: If any response to any question set forth in this questionnaire has been disclosed in any other document, a response may be made by attaching a copy of such disclosure. (For example, said Offeror's most recent filings with the Securities and Exchange Commission ("SEC") may be provided if they are responsive to certain items within the questionnaire.) However, for purposes of clarity, Offeror should correlate its responses with the exhibits by identifying the exhibit and its relevant text.

Disclosures must specifically address, completely respond and comply with all information requested and fully answer all questions requested by Fulton County. Such disclosure must be submitted at the time of the bid or proposal submission and included as a part of the bid/proposal submitted for this project. Disclosure is required for Offerors, joint venture partners and first-tier subcontractors.

Failure to provide required disclosure, submit officially signed and notarized documents or respond to any and all information requested/required by Fulton County can result in the bid/proposal declared as non-responsive. This document must be completed and included as a part of the bid/proposal package along with other required documents.

[SIGNATURES ON NEXT PAGE]

Under penalty or\f perjury, I declare that I have examined this questionnaire and all attachments hereto, if applicable, to the best of my knowledge and belief, and all statements contained hereto are true, correct, and complete.

On this _____ day of _____, 200__

_____
(Legal Name of Proponent) (Date)

_____
(Signature of Authorized Representative) (Date)

_____
(Title)

Sworn to and subscribed before me,

this _____ day of _____, 200__

_____
(Notary Public) (Seal)

Commission Expires _____
(Date)

FORM F: DECLARATION OF EMPLOYEE-NUMBER CATEGORIES

Please affirmatively indicate by checking the appropriate box the employee-number category applicable to your company:

☐ 500 or more employees

☐ 100 or more employees

☐ fewer than 100 employees

Company Name: _____

I certify that the above classification is true and correct.

Signed: _____

Printed: _____

Title: _____

Date: _____

FORM G: GEORGIA SECURITY AND IMMIGRATION CONTRACTOR AFFIDAVIT AND AGREEMENT

Instructions:

Contractors must attest to compliance with the requirements of O.C.G.A 13-10-91 and the Georgia Department of Labor Rule 300-10-01-.02 by executing the Contractor Affidavit provided. The affidavit should be executed by Contractors who have indicated on Form F, Declaration of Employee-Number Categories, that they have 100 or more employees.

STATE OF GEORGIA

COUNTY OF FULTON

FORM G: GEORGIA SECURITY AND IMMIGRATION CONTRACTOR AFFIDAVIT AND AGREEMENT

By executing this affidavit, the undersigned contractor verifies its compliance with O.C.G.A. 13-10-91, stating affirmatively that the individual, firm or corporation which is engaged in the physical performance of services under a contract with **[insert name of prime contractor]** _____ on behalf of **Fulton County Government** has registered with and is participating in a federal work authorization program* [any of the electronic verification of work authorization programs operated by the United States Department of Homeland Security or any equivalent federal work authorization program operated by the United States Department of Homeland Security to verify information of newly hired employees, pursuant to the Immigration Reform and Control Act of 1986 (IRCA), P.L. 99-603], in accordance with the applicability provisions and deadlines established in O.C.G.A. 13-10-91.

The undersigned further agrees that, should it employ or contract with any subcontractor(s) in connection with the physical performance of services to this contract with **Fulton County Government**, contractor will secure from such subcontractor(s) similar verification of compliance with O.C.G.A/ 13-10-91 on the Subcontractor Affidavit provided in Rule 300-10-01-.08 or a substantially similar form. Contractor further agrees to maintain records of such compliance and provide a copy of each such verification to the **Fulton County Government** at the time the subcontractor(s) is retained to perform such service.

_____
EEV/Basic Pilot Program* User Identification Number

_____
BY: Authorized Officer of Agent
(Insert Subcontract Name)

_____
Title of Authorized Officer or Agent of Subcontractor

_____
Printed Name of Authorized Officer or Agent

Sworn to and subscribed before me this _____ day of _____, 200__.

Notary Public: _____

County: _____

Commission Expires: _____

NOTE:

*** As of the effective date of O.C.G.A. 13-10-91, the applicable federal work authorization program is the "EEV/Basic Pilot Program" operated by the U.S. Citizenship and Immigration Services Bureau of the U.S. Department of Homeland Security, in conjunction with the Social Security Administration (SSA).**

FORM H: GEORGIA SECURITY AND IMMIGRATION SUBCONTRACTOR AFFIDAVIT

Instructions:

In the event that your company is awarded the contract for this project, and will be utilizing the services of any subcontractor(s) in connection with the physical performance of services pursuant to this contract, the following affidavit must be completed by such subcontractor(s). Your company must provide a copy of each such affidavit to Fulton County Government, Department of Purchasing & Contract Compliance with the proposal submittal.

All subcontractor affidavit(s) shall become a part of the contract and all subcontractor(s) affidavits shall be maintained by your company and available for inspection by Fulton County Government at any time during the term of the contract. All subcontractor(s) affidavit(s) shall become a part of any contractor/subcontractor agreement(s) entered into by your company.

STATE OF GEORGIA

COUNTY OF FULTON

FORM H: GEORGIA SECURITY AND IMMIGRATION SUBCONTRACTOR AFFIDAVIT

By executing this affidavit, the undersigned subcontractor verifies its compliance with O.C.G.A. 13-10-91, stating affirmatively that the individual, firm or corporation which is engaged in the physical performance of services under a contract with **[insert name of prime contractor]** _____behalf of **Fulton County Government** has registered with and is participating in a federal work authorization program* [any of the electronic verification of work authorization programs operated by the United States Department of Homeland Security or any equivalent federal work authorization program operated by the United States Department of Homeland Security to verify information of newly hired employees, pursuant to the Immigration Reform and Control Act of 1986 (IRCA), P.L. 99-603], in accordance with the applicability provisions and deadlines established in O.C.G.A. 13-10-91.

_____
EEV/Basic Pilot Program* User Identification Number

_____
BY: Authorized Officer of Agent
(Insert Subcontract Name)

_____
Title of Authorized Officer or Agent of Subcontractor

_____
Printed Name of Authorized Officer or Agent

Sworn to and subscribed before me this _____ day of _____, 200__.

Notary Public: _____

County: _____

Commission Expires: _____

NOTE:

*** As of the effective date of O.C.G.A. 13-10-91, the applicable federal work authorization program is the "EEV/Basic Pilot Program" operated by the U.S. Citizenship and Immigration Services Bureau of the U.S. Department of Homeland Security, in conjunction with the Social Security Administration (SSA).**

SECTION IV: CONTRACT COMPLIANCE REQUIREMENTS

NON-DISCRIMINATION IN CONTRACTING AND PROCUREMENT

Policy Statement: It is the policy of Fulton County Government that discrimination against businesses by reason of the race, color, gender or national origin of the ownership of any such business is prohibited. Furthermore, it is the policy of the Board of Commissioners ("Board") that Fulton County and all vendors and contractors doing business with Fulton County shall provide to all businesses the opportunity to participate in contracting and procurement paid, in whole or in part, with monetary appropriations of the Board. Similarly, it is the policy of the Board that the contracting and procurement practices of Fulton County should not implicate Fulton County as either an active or passive participant in the discriminatory practices engaged in by private contractors seeking to obtain contracts with Fulton County.

Equal Business Opportunity Plan (EBO Plan): In addition to the proposal submission requirements, each vendor **must** submit an Equal Business Opportunity Plan (EBO Plan) with their bid/proposal. The EBO Plan is designed to enhance the utilization of a particular racial, gender or ethnic group by a bidder/proposer, contractor, or vendor or by Fulton County. The respondent **must** outline a plan of action to encourage and achieve diversity and equality in the available procurement and contracting opportunities with this solicitation.

The EBO Plan **must** identify and include:

1. Potential opportunities within the scope of work of this solicitation that will allow for participation of racial, gender or ethnic groups.

2. Efforts that will be made by the bidder/proposer to encourage and solicit minority and female business utilization in this solicitation.

Fulton County encourages joint ventures, teaming, partnering and mentor-protégé relationships with minority and female businesses in an effort to achieve contracting and procurement diversity.

Prompt Payment: The prime contractor must certify in writing and must document on the Exhibit G Form (Prime Contractor/Subcontractor Utilization Report) that all subcontractors, sub-consultants and suppliers have been promptly paid for work and materials, (less any retainage by the prime contractor prior to receipt of any further progress payments). In the event the prime contractor is unable to pay subcontractors, sub-consultants or suppliers until it has received a progress payment from Fulton County, the prime contractor shall pay all subcontractors, sub-consultants or suppliers funds due from said progress payments within forty-eight (48) hours of receipt of payment from Fulton County. In no event shall a subcontractor, sub-consultant or supplier be paid later than fifteen (15) days as provided for by state law.

REQUIRED FORMS AND EBO PLAN:

In order to be compliant with the intent and provisions of the Fulton County Non-Discrimination in Purchasing and Contracting Ordinance (99-0960), bidders/proposers must submit the following completed documents. Failure to provide this information shall result in the bid/proposal being deemed non-responsive:

- **Exhibit A** - Promise of Non-Discrimination (for Prime and each Sub-contractor)
- **Exhibit B** - Employment Report (for Prime and each Sub-contractor)
- **Exhibit C** - Schedule of Intended Subcontractor Utilization
- **Exhibit D** - Letter of Intent to Perform As a Subcontractor or Provide Materials or Services
- **Exhibit E** - Declaration Regarding Subcontractor Practices
- **Exhibit F** - Joint Venture Disclosure Affidavit
- **Equal Business Opportunity Plan (EBO Plan)** – This document is not a form. It is a statement created by the bidder/proposer on its company letter head addressing the EBO Plan requirements.

All Contract Compliance documents (Exhibits A – F and EBO Plan) are to be placed in a **separate sealed envelope** clearly marked "Contract Compliance". The EBO Plan must be submitted on company letterhead. These documents are considered part of and should be submitted with the Technical Proposal.

The following document must be completed as instructed if awarded the bid:

- **Exhibit G** - Prime Contractor's Subcontractor Utilization Report

EXHIBIT A – PROMISE OF NON-DISCRIMINATION

"Know all persons by these presents, that I/WE (_____),_____
Name

_____ _____
Title Firm Name

Hereinafter "Company"), in consideration of the privilege to bid on or obtain contracts funded, in whole or in part, by Fulton County, hereby consent, covenant and agree as follows:

(1) No person shall be excluded from participation in, denied the benefit of, or otherwise discriminated against on the basis of race, color, national origin or gender in connection with any bid submitted to Fulton County for the performance of any resulting there from,

(2) That it is and shall be the policy of this Company to provide equal opportunity to all businesses seeking to contract or otherwise interested in contracting with this Company without regard to the race, color, gender or national origin of the ownership of this business,

(3) That the promises of non-discrimination as made and set forth herein shall be continuing in nature and shall remain in full force and effect without interruption,

(4) That the promise of non-discrimination as made and set forth herein shall be made a part of, and incorporated by reference into, any contract or portion thereof which this Company may hereafter obtain,

(5) That the failure of this Company to satisfactorily discharge any of the promises of non-discrimination as made and set forth herein shall constitute a material breach of contract entitling the Board to declare the contract in default and to exercise any and all applicable rights and remedies, including but not limited to cancellation of the contract, termination of the contract, suspension and debarment from future contracting opportunities, and withholding and/or forfeiture of compensation due and owning on a contract; and

(6) That the bidder shall provide such information as may be required by the Director of Contract Compliance pursuant to Section 4.4 of the Fulton County Non-Discrimination in Purchasing and Contracting Ordinance.

SIGNATURE: _____

ADDRESS: _____

_____

TELEPHONE NUMBER: _____

EXHIBIT B – EMPLOYMENT REPORT

The demographic employment make-up for the bidder **must** be identified and submitted with this bid/proposal. In addition, if subcontractors will be utilized by the bidder/proposer to complete this project, then the demographic employment make-up of the subcontractor(s) must be identified and submitted with this bid.

EMPLOYEES

CATEGORY	NATIVE INDIAN		AFRICAN AMERICAN		ASIAN AMERICAN		HISPANIC AMERICAN		CAUCASIAN AMERICAN		OTHER	
Male/Female	M	F	M	F	M	F	M	F	M	F	M	F
Mgmt/Official												
Professional (Arch., P.E., etc.)												
Supervisors												
Office/ Clerical												
Craftsmen												
Laborers												
Others (Specify)												
TOTALS												

FIRM'S NAME:_____

ADDRESS:_____

_____

TELEPHONE NUMBER:_____

This completed form is for (Check one) _____Bidder/Proposer _____Subcontractor

Submitted by: _____ Date Completed:_____

EXHIBIT C – SCHEDULE OF INTENDED SUBCONTRACTOR UTILIZATION

If the bidder/proposer intends to subcontract any portion of this scope of work/service(s), this form **must be** completed and **submitted with the bid/proposal.** All prime bidders/proposers **must** include Letter(s) of Intent (Exhibit D) in the bid document for all subcontractors who will be utilized under the scope of work/services.

Prime Bidder/Proposer:_____

ITB/RFP NUMBER:_____

Project Name or Description of Work/Service(s):_____

_____

_____

1. My firm, as Prime Bidder/Proposer on this scope of work/service(s) is_____is not____a minority or female owned and controlled business. (Please indicate below the portion of work, including, percentage of bid amount that your firm will carry out directly):

   _____

   _____

   If the Prime Bidder/Proposer is a Joint Venture, please complete Exhibit F: Joint Venture Disclosure Affidavit and attach a copy of the executed Joint Venture Agreement.

2. Sub-Contractors (Including suppliers) to be utilized in the performance of this scope of work/service(s), if awarded, are:

SUBCONTRATOR NAME:_____

ADDRESS:_____

_____

PHONE:_____

CONTACT PERSON:_____

ETHNIC GROUP*:_____COUNTY CERTIFIED**_____

WORK TO BE PERFORMED:_____

_____

DOLLAR VALUE OF WORK: $_____ PERCENTAGE VALUE:_____%

***Ethnic Groups: African American (AABE); Asian American (ABE); Hispanic American (HBE); Native American (NABE); White Female American (WFBE);**
****If yes, attach copy of recent certification letter.**

EXHIBIT C – SCHEDULE OF INTENDED SUBCONTRACTOR UTILIZATION

SUBCONTRATOR NAME:_____
ADDRESS:_____
_____
PHONE:_____
CONTACT PERSON:_____
ETHNIC GROUP*:_____COUNTY CERTIFIED**_____
WORK TO BE PERFORMED:_____
DOLLAR VALUE OF WORK: $_____PERCENTAGE VALUE:_____%

SUBCONTRATOR NAME:_____
ADDRESS:_____
_____
PHONE:_____
CONTACT PERSON:_____
ETHNIC GROUP*:_____COUNTY CERTIFIED**_____
WORK TO BE PERFORMED:_____
DOLLAR VALUE OF WORK: $_____PERCENTAGE VALUE:_____%

SUBCONTRATOR NAME:_____
ADDRESS:_____
_____
PHONE:_____
CONTACT PERSON:_____
ETHNIC GROUP*:_____COUNTY CERTIFIED**_____
WORK TO BE PERFORMED:_____
DOLLAR VALUE OF WORK: $_____PERCENTAGE VALUE:_____%

SUBCONTRATOR NAME:_____
ADDRESS:_____
_____
PHONE:_____
CONTACT PERSON:_____
ETHNIC GROUP*:_____COUNTY CERTIFIED**_____
WORK TO BE PERFORMED:_____
DOLLAR VALUE OF WORK: $_____PERCENTAGE VALUE:_____%

***Ethnic Groups: African American (AABE); Asian American (ABE); Hispanic American (HBE); Native American (NABE); White Female American (WFBE); **If yes, attach copy of recent certification letter.**

EXHIBIT C – SCHEDULE OF INTENDED SUBCONTRACTOR UTILIZATION

Total Dollar Value of Subcontractor Agreements: ($)

Total Percentage Value: (%)

CERTIFICATION: The undersigned certifies that he/she has read, understands and agrees to be bound by the Bid provisions, including the accompanying Exhibits and other terms and conditions regarding sub-contractor utilization. The undersigned further certifies that he/she is legally authorized by the Bidder to make the statement and representation in this Exhibit and that said statements and representations are true and correct to the best of his/her knowledge and belief. The undersigned understands and agrees that if any of the statements and representations are made by the Bidder knowing them to be false, or if there is a failure of the intentions, objectives and commitments set forth herein without prior approval of the County, then in any such event the Contractor's acts or failure to act, as the case may be, shall constitute a material breach of the contract, entitling the County to terminate the Contract for default. The right to so terminate shall be in addition to, and in lieu of, any other rights and remedies the County may have for other defaults under the contract.

Signature/Title:_____

Firm or Corporate Name:_____

Address:_____

_____

Telephone: ( )_____

Fax Number: ( )_____

Email Address:_____

EXHIBIT D – LETTER OF INTENT TO PERFORM AS A SUBCONTRACTOR

OR PROVIDE MATERIALS OR SERVICES

This form must be completed by ALL known subcontractors/suppliers and submitted with the bid. The Prime Contractor must submit Letters of Intent for ALL known subcontractors/suppliers at time of bid submission.

To:_____
(Name of Prime Contractor Firm)

From:_____
(Name of Subcontractor Firm)

ITB/RFP Number:_____

Project Name:_____

The undersigned is prepared to perform the following described work or provide materials or services in connection with the above project (specify in detail particular work items, materials, or services to be performed or provided):

Description of Work	Project Commence Date	Project Completion Date	Estimated Dollar Amount

_____	_____
(Prime Bidder)	**(Subcontractor)**
Signature_____	**Signature**_____
Title_____	**Title**_____
Date_____	**Date**_____

EXHIBIT E – DECLARATION REGARDING SUBCONTRACTING PRACTICES

If the bidder/proposer **does not intend to subcontract** any portion of the scope of work services(s), this form **must be** completed and submitted with the bid.

_____Hereby declares that it is my/our intent to
(Bidder)

Perform 100% of the work required for_____
(IFB/RFP Number)

_____
(Description of Work)

In making this declaration, the bidder/proposer states the following:

1. That the bidder does not customarily subcontract elements of this type project, and normally performs and has the capability to perform and will perform **all elements** of the work on this project with his/her own current work forces;

2. If it should become necessary to subcontract some portion of the work at a later date, the bidder will comply with all requirements of the County's Non-Discrimination Ordinance in providing equal opportunities to all firms to subcontract the work. The determination to subcontract some portion of the work at a later date shall be made in good faith and the County reserves the right to require additional information to substantiate a bidder's decision to subcontract work following the award of the contract. Nothing contained in this provision shall be employed to circumvent the spirit and intent of the County's Non-Discrimination Ordinances;

3. The bidder will provide, upon request, information sufficient for the County to verify Item Number one.

AUTHORIZED COMPANY REPRESENTATIVE

Name:_____**Title:**_____ **Date:**_____

Signature:_____

Firm:_____

Address:_____

Phone Number:_____

Fax Number:_____

Email Address:_____

EXHIBIT F – JOINT VENTURE DISCLOSURE AFFIDAVIT

IFB No._____

Project Name_____

This form must be completed and submitted with the bid if a Joint Venture approach is to be undertaken.

The firms listed below do hereby declare that they have entered into a joint venture agreement pursuant to the above mentioned project. The information requested below is to clearly identify and explain the extent of participation of each firm in the proposed joint venture. All items must be properly addressed before the business entity can be evaluated.

1. Firms:

1) Name of Business:_____
Street Address: _____
City/State/Zip:_____
County: _____
Nature of Business:_____

2) Name of Business:_____
Street Address: _____
City/State/Zip:_____
County: _____
Nature of Business:_____

3) Name of Business:_____
Street Address: _____
City/State/Zip:_____
County: _____
Nature of Business:_____

NAME OF JOINT VENTURE (If applicable):_____

OFFICE ADDRESS:_____

PRINCIPAL OFFICE:_____

OFFICE PHONE:_____

EXHIBIT F – JOINT VENTURE DISCLOSURE AFFIDAVIT CONTINUED

Note: Attach additional sheets as required

2. Describe the capital contributions by each joint venturer and accounting thereof. Indicate the percentage make-up for each joint venture partner.

3. Describe the financial controls of the joint venture, e.g., will a separate cost center be established? Which venturer will be responsible for keeping the books? How will the expense therefore be reimbursed? What is the authority of each joint venture to commit or obligate the order?

4. Describe any Ownership, options for Ownership, or loans between the joint ventures. Identify terms thereof.

5. Describe the estimate contract cash flow for each joint venturer.

6. To what extent and by whom will the on-site work be supervised?

7. To what extent and by whom will the administrative office be supervised?

8. Which joint venturer will be responsible for material purchases including the estimated cost thereof? How will the purchase be financed?

9. Which joint venturer will provide equipment? What is the estimated cost thereof? How will the equipment be financed?

10. Describe the experience and business qualifications of each joint venturer.

11. Submit a copy of all joint venture agreements and evidence of authority to do business in the State of Georgia as well as locally, to include all necessary business licenses.

12. Percent of ownership by each joint venture in terms of profit and loss sharing:_____
_____

13. The authority of each joint venturer to commit or obligate the other:_____
_____

14. Number of personnel to be involved in project, their crafts and positions and whether they are employees of the small business enterprise, the majority firm or the joint venture:_____
_____

EXHIBIT F – JOINT VENTURE DISCLOSURE AFFIDAVIT CONTINUED

15. Identification of control and participation in venture; list those individuals who are responsible for day-to-day management and policy decision-maker, including, but not limited to, those with prime responsibility for areas designated below; (use additional sheets if necessary)

Name	Race	Sex	Financial Decisions	Supervision Field Operation
_____	_____	_____	_____	_____
_____	_____	_____	_____	_____
_____	_____	_____	_____	_____
_____	_____	_____	_____	_____
_____	_____	_____	_____	_____

In connection with any work that these firms, as a joint venture, might be authorized to perform in connection with above captioned contract, we each do hereby authorize representatives of the Fulton County Department of Purchasing and Contract Compliance and Departments of Finance, under the direction of the County Manger's Office, to examine, from time to time, the books, records and files to the extent that such relate to this County project.

WE DO SOLEMNLY DECLARE AND AFFIRM UNDER THE PENALTIES OF PERJURY THAT THE CONTENTS OF THE FOREGOING DOCUMENT ARE TRUE AND CORRECT, AND THAT WE ARE AUTHORIZED, ON BEHALF OF THE ABOVE FIRMS, TO MAKE THIS AFFIDAVIT AND GRANT THE ABOVE PRIVILEGE.

FOR:_____
(Company)

Date:_____ _____
(Signature of Affiant)

_____
(Printed Name)

_____
(Company)

Date:_____ _____
(Signature of Affiant)

_____
(Printed Name)

State of_____**:**

County of_____**:**

On this _____ **day of** _____**, 20**_____**, before me, appeared**

_____**, the undersigned known to me to be the person described in the foregoing Affidavit and acknowledge that he (she) executed the same in the capacity therein stated and for the purpose therein contained**

EXHIBIT G – PRIME CONTRACTOR/SUBCONTRACTOR UTILIZATION REPORT

This report is required to be submitted by the tenth day of each month, with a copy of your payment invoice (schedule of values/payment application) to Contract Compliance. Failure to comply may result in the County commencing proceedings to impose sanctions on the successful bidder, in addition to purchasing any other available legal remedy. Sanctions may include the suspending of any payment or part thereof, termination or cancellation of the contract, and the denial to participate in any future contracts awarded by Fulton County.

REPORTING PERIOD		PROJECT NAME:	
FROM:		PROJECT NUMBER:	
TO:		PROJECT LOCATION:	

PRIME CONTRACTOR		Contract Award Date	Contract Award Amount	Change Order Amount	Contract Period	% Complete to Date
Name:						
Address:						
Telephone #:						

AMOUNT OF REQUISITION THIS PERIOD: $_____
TOTAL AMOUNT REQUISITION TO DATE: $_____
TOTAL AMOUNT REQUISITION TO DATE: $_____

SUBCONTRACTOR UTILIZATION (add additional rows as necessary)

Name of Sub-contractor	Description of Work	Contract Amount	Amount Paid To Date	Amount Requisition This Period	Contract Period Starting Date	Ending Date
TOTALS						

Executed By:_____ _____
(Signature) (Printed Name)

SECTION V: INSURANCE AND RISK MANAGEMENT PROVISIONS CONSTRUCTION

It is Fulton County Government's practice to obtain Certificates of Insurance from our Contractors and Vendors. Insurance must be written by a licensed agent in a company licensed to write insurance in the State of Georgia, with an A.M. Best rating of at least A- VI, subject to final approval by Fulton County. Respondents shall submit with the bid/proposal evidence of insurability satisfactory to Fulton County Government as to form and content. Either of the following forms of evidence is acceptable:

- A letter from an insurance carrier stating that upon your firm/company being the successful Bidder/Respondent that a Certificate of Insurance shall be issued in compliance with the Insurance and Risk Management Provisions outlined below.
- A Certificate of Insurance complying with the Insurance and Risk Management Provisions outlined below (Request for Bid/Proposal number and Project Name, Number and Description must appear on the Certificate of Insurance).
- A combination of specific policies written with an umbrella policy covering liabilities in excess of the required limits is acceptable to achieve the applicable insurance coverage levels.

Upon award, the Contractor/Vendor must maintain at their expense, insurance with policy limits equal to or greater than the limits described below. Proof of insurance must be provided to Fulton County Government prior to the start of any activities/construction as described in the bid document(s). Any and all Insurance Coverage(s) and Bonds required under the terms and conditions of the contract shall be maintained during the entire length of the contract, including any extensions or renewals thereto, and until all work has been completed to the satisfaction of Fulton County Government.

Accordingly the Respondent shall provide a certificate evidencing the following:

1. **WORKERS COMPENSATION/EMPLOYER'S LIABILITY INSURANCE – STATUTORY (In compliance with the Georgia Workers Compensation Acts and any other State or Federal Acts or Provisions in which jurisdiction may be granted)**

Employer's Liability Insurance	BY ACCIDENT	EACH ACCIDENT	$1,000,000
Employer's Liability Insurance	BY DISEASE	POLICY LIMIT	$1,000,000
Employer's Liability Insurance	BY DISEASE	EACH EMPLOYEE	$1,000,000

2. **COMMERCIAL GENERAL LIABILITY INSURANCE (Including contractual Liability Insurance)**

Bodily Injury and Property Damage Liability	Each Occurrence	$1,000,000
(Other than Products/Completed Operations)	General Aggregate	$2,000,000
Products\Completed Operation	Aggregate Limit	$2,000,000
Personal and Advertising Injury	Limits	$1,000,000
Fire Damage	Limits	$100,000

To Include Per Project/Location Aggregate and Completed Operations for 3 Years after final payment

3. BUSINESS AUTOMOBILE LIABILITY INSURANCE

Combined Single Limits	Each Occurrence	$1,000,000

(Including operation of non-owned, owned, and hired automobiles).
Broadened Pollution Endorsement CA9948 and MCS 90

4. UMBRELLA LIABILITY

(In excess of above noted coverages)	Each Occurrence	$5,000,000

5. CONTRACTORS POLLUTION LIABILITY	Each Occurrence	$2,000,000

6. BUILDERS' RISK:

To be written on a Builders Risk "All-risk" form that shall at least include insurance for physical loss or damage to the Work, temporary buildings, falsework, and materials and equipment in transit, and shall insure against at least the following perils or causes of loss: fire, lightning, extended coverage, theft, vandalism, malicious mischief, earthquake, collapse, debris removal, demolition occasioned by enforcement of Laws and Regulations, water damage (other than caused by flood), and such other perils or causes of loss as may be specifically required by Supplementary Conditions) until Final Completion and Acceptance of the Project. Such policy of insurance shall contain at least the following sub-limits of insurance and deductibles:

Sub-limits:	
Property in Transit	$1,000,000
Property in Offsite Storage	$1,000,000
Plans & Blueprints	$25,000
Debris Removal	25% of Insured Physical Loss
Delay in Completion / Soft Cost	TBD
Ordinance of Law (Increased Cost of Construction)	$1,000,000
Flood and Earthquake	TBD – Full Contract Value
Deductibles:	
Flood and Earthquake	$25,000
Water Damage other than Flood	$100,000
All other Perils	$10,000

Owner and Contractor waive all rights against each other and any of their subcontractors, sub-subcontractors, agents and employees, each of the other, for damages caused by fire or other causes of loss to the extent covered by property insurance obtained pursuant to this Section, or other property insurance applicable to the Work, accept such rights as they have to the proceeds of such insurance.

The policy will name Fulton County, The Contractor and Subcontractors of all tiers as Insureds under the policy.

Certificates of Insurance

Certificates shall state that the policy or policies shall not expire, be cancelled or altered without at least sixty (60) days prior written notice to Fulton County Government. Policies and Certificates of Insurance are to list Fulton County Government as an Additional Insured (except for Workers' Compensation) and shall conform to all terms and conditions (including coverage of the indemnification and hold harmless agreement) contained in the Insurance and Risk Management Provisions. The General Liability Additional Insured language should apply to on-going and completed-operations, using ISO form CG 2010 (11/85 version) or equivalent.

If Fulton County Government shall so request, the Respondent, Contractor or Vendor will furnish the County for its inspection and approval such policies of insurance with all endorsements, or confirmed specimens thereof certified by the insurance company to be true and correct copies.

The Contractor agrees to name the Owner and all other parties required of the Contractor/Vendor shall be included as insureds on the CGL, using ISO Additional Insured Endorsement forms CG 2010 11/85 or its equivalent coverage to the additional insureds. This insurance for the additional insureds shall be as broad as the coverage provided for the named insured Subcontractor. It shall apply as Primary Insurance before any other insurance or self-insurance, including any deductible, non-contributory, and Waiver of Subrogation provided to the Additional Insureds.

Additional Insured under the General Liability, Auto Liability, Umbrella Policies (with exception of Workers Compensation and Professional Liability), with no Cross Suits exclusion.

Important:
It is understood that **Insurance in no way Limits the Liability of the Contractor/Vendor.**

USE OF PREMISES

Contractor/Vendor shall confine its apparatus; the storage of materials and the operations of its workers to limits/requirements indicated by law, ordinance, permits and any restrictions of Fulton County Government and shall not unreasonably encumber the premises with its materials.

PROTECTION OF PROPERTY

Contractor/Vendor will adequately protect its own work from damage, will protect Fulton County Government's property from damage or loss and will take all necessary precautions during the progress of the work to protect all persons and the property of others from damage or loss.

Contractor/Vendor shall take all necessary precautions for the safety of employees of the work and shall comply with all applicable provisions of the Federal, State and local safety laws and building codes to prevent accidents or injury to persons on, about, or adjacent to the premises where work is being performed.

Contractor/Vendor shall erect and properly maintain at all times as required by the conditions and progress of the work, all necessary safeguards for the protection of its employees, Fulton County Government employees and the public and shall post all applicable signage and other warning devices t protect against potential hazards for the work being performed.

INDEMNIFICATION AND HOLD HARMLESS AGREEMENT

To the fullest extent of the Law, Contractor/Vendor hereby agrees to release, indemnify, defend and hold harmless Fulton County, its Commissioners, officers, employees, subcontractors, successors, assigns and agents, from and against any and all losses (including death), claims, damages, liabilities, costs and expenses (including but not limited to all actions, proceedings, or investigations in respect thereof and any costs of judgments, settlements, court costs, attorney's fees or expenses, regardless of the outcome of any such action, proceeding, or investigation), caused by, relating to, based upon or arising out of any act or omission by Contractor/Vendor, its directors, officers, employees, subcontractors, successors, assigns or agents, or otherwise in connection (directly or indirectly) with its acceptance, or the performance, or nonperformance, of its obligations under these agreements. Such obligations shall not be construed to negate, abridge or otherwise reduce any other rights or obligations of indemnity which would otherwise exist as to any party or person as set forth in this paragraph.

Contractor/Vendor's obligation to protect, defend, indemnify and hold harmless, as set forth hereinabove, shall also include, but is not limited to, any matter arising out of any actual or alleged infringement of any patent, trademark, copyright, or service mark, or other actual or alleged unfair competition disparagement of product or service, or other tort or any type whatsoever, or any actual or alleged violation of trade regulations.

Contractor/Vendor further agrees to protect, defend, indemnify and hold harmless Fulton County, its Commissioners, officers, employees, subcontractors, successors, assigns and agents from and against any and all claims or liability for compensation under the Worker's Compensation Act, Disability Benefits Act, or any other employee benefits act arising out of injuries sustained by any employees of Contractor/Vendor. These indemnities shall not be limited by reason of the listing of any insurance coverage.

If the bid/quotation involves construction services Contractor/Vendor will be responsible fully for any and all damage to the work during the course of construction, until the point of Final acceptance by Fulton County.

FULTON COUNTY ACKNOWLEDGES THAT ALL PROVISIONS OF THIS INDEMNITY AGREEMENT MAY NOT BE APPLICABLE TO THE CONTRACTOR/VENDOR'S BUSINESS. TO THE EXTENT THAT CONTRACTOR/VENDOR MAY DEMONSTRATE SUCH NONAPPLICABILITY, FULTON COUNTY MAY NEGOTIATE AMENDMENTS TO THIS AGREEMENT AS THE CIRCUMSTANCES DICTATE.

CONTRACTOR/VENDOR ACKNOWLEDGES HAVING READ, UNDERSTANDING, AND AGREEING TO COMPLY WITH THIS INDEMNIFICATION AND HOLD HARMLESS AGREEMENT, AND THE REPRESENTATIVE OF THE CONTRACTOR/VENDOR IDENTIFIED BELOW IS AUTHORIZED TO SIGN CONTRACTS ON BEHALF OF THE RESPONDING CONTRACTOR/VENDOR.

COMPANY: _____ SIGNATURE: _____

NAME: _____ TITLE: _____

DATE: _____

SECTION VI: SAMPLE CONTRACTUAL AGREEMENT

T243 REYNOLDS ROAD AT WESTLAKE PARKWAY INTERSECTION IMPROVEMENT

Contractor: _____ Project No. _____

Address: _____ Telephone: _____

Contact: _____ Facsimile: _____

THIS AGREEMENT is effective as of the _____ day of _____, 200__, by and between Fulton County, a political subdivision of the State of Georgia (hereinafter called the "County"), and the above named CONTRACTOR in accordance with all provisions of this Construction agreement, consisting of the following Contract Documents:

General Conditions
Special Provisions
Bid Form
Scope of Work and Technical Specifications
Drawings and Specifications
Exhibits
Purchasing Forms
Office of Contract Compliance Forms
Risk Management Insurance Provisions Forms

WITNESSETH: That the said Contractor has agreed, and by these presents does agree with the said County, for and in consideration of a Contract Price of _____($_____) and other good and valuable consideration, and under the penalty expressed on Bonds hereto attached, to furnish all equipment, tools, materials, skill, and labor of every description necessary to carry out and complete in good, firm, and substantial, and workmanlike manner, the Work specified, in strict conformity with the Drawings and the Specifications hereinafter set forth, which Drawings and Specifications together with the bid submittals made by the Contractor, General Conditions, Special Provisions, Detailed Specifications, Exhibits, and this Agreement, shall all form essential parts of this Contract. The Work covered by this Contract includes all Work indicated on Plans and Specifications and listed in the Bid entitled:

08ITB62600K-JD T243 Reynolds Road at Westlake Parkway Intersection Improvement

The Contractor shall commence the Work with adequate force and equipment within 10 days from receipt of Notice to Proceed from the County, and shall complete the work within **Ninety (90) Available Days** from the Notice to Proceed or the date work begins, whichever comes first. The Contractor shall remain responsible for performing, in accordance with the terms of the contract, all work assigned prior to the expiration of the said calendar days allowed for completion of the work even if the work is not completed until after the expiration of such days.

[For each available day that any work remains uncompleted after the time allowed for completion of the work, the Contractor shall pay the County the sum of $630.00 or as applicable according to Base Bid Amount (see GDOT Standard Specifications Section 108.08) not as a penalty but as liquidated damages, which liquidated damages the County may deduct from any money due the contractor. At the County's convenience and not to it prejudice the County may provide written notice of the commencement of the assessment of liquidated damages].

As full compensation for the faithful performance of this Contract, the County shall pay the Contractor in accordance with the General Conditions and the prices stipulated in the Bid, hereto attached.

It is further mutually agreed between the parties hereto that if, at any time after the execution of this Agreement and the Surety Bonds hereto attached for its faithful performance, the County shall deem the surety or sureties upon such bonds to be unsatisfactory, or, if, for any reason, such bonds cease to be adequate to cover the performance of the Work, the Contractor shall, at his expense, within five days after receipt of notice from the County so to do, furnish an additional bond or bonds in such form and amount, and with such surety or sureties as shall be satisfactory to the County. In such event no further payment to the Contractor shall be deemed to be due under this Agreement until such new or additional security for the faithful performance of the Work shall be furnished in manner and form satisfactory to the County.

The Contractor hereby assumes the entire responsibility and liability for any and all injury to or death of any and all persons, including the Contractor's agents, servants, and employees, and in addition thereto, for any and all damages to property caused by or resulting from or arising out of any act or omission in connection with this contract or the prosecution of work hereunder, whether caused by the Contractor or the Contractor's agents, Servants, or employees, or by any of the Contractor's subcontractors or suppliers, and the Contractor shall indemnify and hold harmless the County, the Construction Manager, or any of their subcontractors from and against any and all loss and/or expense which they or any of them may suffer or pay as a result of claims or suits due to, because of, or arising out of any and all such injuries, deaths and/or damage, irrespective of County or Construction Manager negligence (except that no party shall be indemnified for their own sole negligence). The Contractor, if requested, shall assume and defend at the Contractor's own expense, any suit, action or other legal proceedings arising there from, and the Contractor hereby agrees to satisfy, pay, and cause to be discharged of record any judgment which may be rendered against the County and the Construction Manager arising there from.

In the event of any such loss, expense, damage, or injury, or if any claim or demand for damages as heretofore set forth is made against the County or the Construction Manager, the County may withhold from any payment due or thereafter to become due to the Contractor under the terms of this Contract, an amount sufficient in its judgment to protect and indemnify it and the Construction Manager from any and all claims, expense, loss, damages, or injury; and the County, in its discretion, may require the Contractor to furnish a surety bond satisfactory to the County providing for such protection and indemnity, which bond shall be furnished by the Contractor within five (5) days after written demand has been made therefore. The expense of said Bond shall be borne by the Contractor. **[See General Conditions for similar provisions]**

This Contract constitutes the full agreement between the parties, and the Contractor shall not sublet, assign, transfer, pledge, convey, sell or otherwise dispose of the whole or any part of this Contract or his right, title, or interest therein to any person, firm or corporation without the previous consent of the County in writing. Subject to applicable provisions of law, this Contract shall be in full force and effect as a Contract, from the date on which a fully executed and approved counterpart hereof is delivered to the Contractor and shall remain and continue in full force and effect until after the expiration of any guarantee period and the Contractor and his sureties are finally released by the County.

This agreement was approved by the Fulton County Board of Commissioner on [Insert approval date and item number].

IN WITNESS THEREOF, the Parties hereto have caused this Contract to be executed by their duly authorized representatives as attested and witnessed and their corporate seals to be hereunto affixed as of the day and year date first above written.

OWNER:

FULTON COUNTY, GEORGIA

John H. Eaves, Commission Chair
Board of Commissioners

ATTEST:

Mark Massey
Clerk to the Commission (Seal)

APPROVED AS TO FORM:

Office of the County Attorney

APPROVED AS TO CONTENT:

Angela Parker
Director of Public Works

CONTRACTOR:

[Insert Company Name]

[Insert Name & Title of person authorized to sign contract]

ATTEST:

Secretary/Assistant Secretary

(Affix Corporate Seal)

SECTION VII: PERFORMANCE BOND REQUIREMENTS

No contract with Fulton County for work to be done shall be valid for any purpose unless the Contractor provides a Performance Bond with good and sufficient surety payable to, in favor of, and for the protection of Fulton County. The Performance Bond shall be in the amount of 100% of the total contract amount, payable by the terms of the Contract, and shall be written on the following form.

Surety companies executing Bonds must appear on the Treasury Department's most current list (Circular 570 as amended) and be authorized to transact business as a surety in Georgia.

Attestation for the corporation must be by the corporate officer; for a partnership by another partner; for an individual by a notary with the corporate seal.

PERFORMANCE BOND

KNOW ALL MEN BY THESE PRESENTS that _____
(Insert name of Contractor)
(hereinafter called the "Principal") and _____(hereinafter called the
(Insert name of Surety)
"Surety"), are held and firmly bound unto **FULTON COUNTY**, a political subdivision of the State of Georgia (hereinafter called the "Owner"), its successors and assigns, in the penal sum of _____[100% of Contract amount], lawful money of the United States of America, for the payment of which the Principal and the Surety bind themselves, their administrators, executors, successors and assigns, jointly and severally, firmly by these presents.

WHEREAS, the Principal has entered, or is about to enter, into a certain written contract with the Owner, dated _____, which is incorporated herein by reference in its entirety (hereinafter called the "Contract"), for construction-type services of a project known as **T243 REYNOLDS ROAD AT WESTLAKE PARKWAY INTERSECTION IMPROVEMENT**, as more particularly described in the Contract (hereinafter called the "Project");

NOW, THEREFORE, the conditions of this obligation are as follows, that if the Principal shall fully and completely perform all the undertakings, covenants, terms, conditions, warranties, and guarantees contained in the Contract, including all modifications, amendments, changes, deletions, additions, and alterations thereto that may hereafter be made, then this obligation shall be void; otherwise it shall remain in full force and effect.

Whenever the Principal shall be, and declared by the Owner to be, in default under the Construction-Type Contract, the Surety shall promptly remedy the default as follows:

1. Complete the Contract in accordance with its terms and conditions; or, at the sole option of the Owner,

2. Obtain a bid or bids for completing the Contract in accordance with its terms and conditions, and upon determination by the Surety and the Owner of the lowest responsible bidder, arrange for a contract between such bidder and Owner and make available as the work progresses (even though there should be a default or succession of defaults under the Contract or contracts of completion arranged under this paragraph) sufficient funds to pay the cost of completion less the balance of the contract price; but not exceeding, including other costs and damages for which the Surety may be liable hereunder, the penal sum set forth in the first paragraph hereof, as may be adjusted, and the Surety shall make available and pay to the Owner the funds required by this Paragraph prior to the payment of the Owner of the balance of the contract price, or any portion thereof. The term "balance of the contract price," as used in this paragraph, shall mean the total amount payable by the Owner to the Contractor under the Contract, and any amendments thereto, less the amount paid by the Owner to the Contractor; or, at the sole option of the Owner,

3. Allow Owner to complete the work and reimburse the Owner for all reasonable costs incurred in completing the work.

In addition to performing as required in the above paragraphs, the Surety shall indemnify and hold harmless the Owner from any and all losses, liability and damages, claims, judgments, liens, costs and fees of every description, including reasonable attorney's fees, litigation costs and expert witness fees, which the Owner may incur, sustain or suffer by reason of the failure or default on the part of the Principal in the performance of any or all of the terms, provisions, and requirements of the Contract, including any and all amendments and modifications thereto, or incurred by the Owner in making good any such failure of performance on the part of the Principal.

The Surety shall commence performance of its obligations and undertakings under this Bond promptly and without delay, after written notice from the Owner to the Surety.

The Surety hereby waives notice of any and all modifications, omissions, additions, changes, alterations, extensions of time, changes in payment terms, and any other amendments in or about the Contract, and agrees that the obligations undertaken by this Bond shall not be impaired in any manner by reason of any such modifications, omissions, additions, changes, alterations, extensions of time, change in payment terms, and amendments.

The Surety hereby agrees that this Bond shall be deemed amended automatically and immediately, without formal or separate amendments hereto, upon any amendment to the Contract, so as to bind the Principal and the Surety to the full and faithful performance of the Contract as so amended or modified, and so as to increase the penal sum to the adjusted Contract Price of the Contract.

No right of action shall accrue on this Bond to or for the use of any person, entity or corporation other than the Owner and any other obligee named herein, or their executors, administrators, successors or assigns.

This Bond is intended to comply with O.C.G.A. Section 36-91-1 et seq., and shall be interpreted so; as to comply with; the minimum requirements thereof. However, in the event the express language of this Bond extends protection to; the Owner beyond that contemplated by O.C.G.A. Section 36-91-1 et seq. and O.C.G.A. Section 13-10-1, as amended, or any other statutory law applicable to this Project, then the additional protection shall be enforced in favor of the Owner, whether or not such protection is found in the applicable statutes.

IN WITNESS WHEREOF the undersigned have caused this instrument to be executed and their respective corporate seals to be affixed and attested by their duly authorized representatives this _____day of _____, 200___.

_____(SEAL)
(Principal)

By:_____

Attest:

_____
Secretary

_____(SEAL)
(Surety)

By:_____

Attest:

_____
Secretary

_____

(Address of Surety's Home Office)

_____
(Resident Agent of Surety)

SECTION VIII: PAYMENT BOND REQUIREMENTS

No Contract with Fulton County for work to be done shall be valid for any purpose unless the Contractor provides a Payment Bond with good and sufficient surety payable to Fulton County for the use and protection of all sub-contractors and all persons supplying labor, materials, machinery, and equipment in the prosecution of the work provided for in the Contract. The Payment Bond shall be in the amount of 100% of the total contract amount, payable by the terms of the Contract, and shall be written on the following form.

Surety companies executing Bonds must appear on the Treasury Department's most current list (Circular 570 as amended) and be authorized to transact business in the State of Georgia.

Attestation for the corporation must be by the corporate officer; for a partnership by another partner; for an individual by a notary with the corporate seal.

PAYMENT BOND

KNOW ALL MEN BY THESE PRESENTS that _____
(Insert name of Contractor)
(hereinafter called the "Principal") and _____(hereinafter called the
(Insert name of Surety)
"Surety"), are held and firmly bound unto **FULTON COUNTY**, a political subdivision of the State of Georgia (hereinafter called the "Owner"), its successors and assigns as obligee, in the penal sum of _____[100% of Contract amount], lawful money of the United States of America, for the payment of which the Principal and the Surety bind themselves, their administrators, executors, successors and assigns, jointly and severally, firmly by these presents.

WHEREAS, the Principal has entered, or is about to enter, into a certain written contract with the Owner, dated _____, which is incorporated herein by reference in its entirety (hereinafter called the "Contract"), for construction-type services of a project known as **T243 REYNOLDS ROAD AT WESTLAKE PARKWAY INTERSECTION IMPROVEMENT**, as more particularly described in the Contract (hereinafter called the "Project");

NOW, THEREFORE, the condition of this obligation is such that if the Principal shall promptly make payment to all persons working on or supplying labor or materials under the Contract, and any amendments thereto, with regard to labor or materials furnished and used in the Project, and with regard to labor or materials furnished but not so used, then this obligation shall be void; but otherwise it shall remain in full force and effect.

1. A "Claimant' shall be defined herein as any subcontractor, person, party, partnership, corporation or the entity furnishing labor, services or materials used, or reasonably required for use, in the performance of the Contract, without regard to whether such labor, services or materials were sold, leased or rented, and without regard to whether such Claimant is or is not in privity of contract with the Principal or any subcontractor performing work on the Project, including, but not limited to, the following labor, services, or materials: water, gas, power, light, heat, oil, gasoline, telephone service or rental of equipment directly applicable to the Contract.

2. In the event a Claimant files a lien against the property of the Owner, and the Principal fails or refuses to satisfy or remove it promptly, the Surety shall satisfy or remove the lien promptly upon written notice from the Owner, either by bond or as otherwise provided in the Contract.

3. The Surety hereby waives notice of any and all modifications, omissions, additions, changes, alterations, extensions of time, changes in the payment terms, and any other amendments in or about the Contract and agrees that the obligations undertaken by this Bond shall not be impaired in any manner by reason of any such modifications, omissions, additions, changes, alterations, extensions of time, changes in payment terms, and amendments.

4. The Surety hereby agrees that this Bond shall be deemed amended automatically and immediately, without formal or separate amendments hereto, upon any amendment or modifications to the Contract, so as to bind the Principal and Surety, jointly and severally, to the full payment of any Claimant under the Contract, as amended or modified, provided only that the Surety shall not be liable for more than the penal sum of the Bond, as specified in the first paragraph hereof.

5. This Bond is made for the use and benefit of all persons, firms, and corporations who or which may furnish any materials or perform any labor for or on account of the construction-type services to be performed or supplied under the Contract, and any amendments thereto, and they and each of them may sue hereon.

6. No action may be maintained on this Bond after one (1) year from the date the last services, labor, or materials were provided under the Contract by the Claimant prosecuting said action.

7. This Bond is intended to comply with O.C.G.A. Section 13-10-1, and shall be interpreted so as to comply with the minimum requirements thereof. However, in the event the express language of this Bond extends protection to the Owner beyond that contemplated by O.C.G.A. Section 13-10-1, or any other statutory law applicable to this Project, then the additional protection shall be enforced in favor of the Owner, whether or not such protection is found in the applicable statutes.

IN WITNESS WHEREOF the undersigned have caused this instrument to be executed and their respective corporate seals to be affixed and attested by their duly authorized representatives this ____day of _____, _____.

_____(SEAL)
(Principal)

By:_____

Attest:

_____
Secretary

_____(SEAL)
(Surety)

By:_____

Attest:

_____
Secretary

_____

(Address of Surety's Home Office)

_____
(Resident Agent of Surety)

SECTION IX: GENERAL CONDITIONS

Unless otherwise modified by the Special Conditions, all work performed under this contract shall be in accordance with the Georgia Department of Transportation State of Georgia Standard Specifications, Construction of Transportation Systems, 2001 Edition, and all Special Conditions modifying them.

For

Official Use Only

NOTICE OF INTENT
State of Georgia Environmental Protection Division
For Coverage Under NPDES General Permit
To Discharge Storm Water Associated With Construction Activity

PRIMARY PERMITTEE on Existing Sites Disturbing between 1 and 5 Acres

Coverage Desired (Check Only One)

☐ GAR 100001-Stand Alone ☐ GAR 100002-Infrastructure ☐ GAR 100003-Common Development

I. SITE/OWNER/OPERATOR INFORMATION

Site Project Name: _____

GPS Location of Construction Exit: _____

Street Address: _____

City (if applicable): _____ County: _____

Subdivision Name (if applicable): _____

Owner's Name: _____

Address: _____ City: _____ State: _____ Zip Code: _____

Operator's Name: _____ Phone: _____

Address: _____ City: _____ State: _____ Zip Code: _____

Facility Contact: _____ Phone: _____

II. SITE ACTIVITY INFORMATION

Start Date: _____ Completion Date: _____ Estimated Disturbed Acreage: _____

Type Construction Activity: ☐ Commercial ☐ Industrial ☐ Municipal ☐ Infrastructure
☐ Utility ☐ Residential/Subdivision Development

Number of Secondary Permittees: _____

III. RECEIVING WATER INFORMATION

A. Name of Initial Receiving Water(s): _____

☐ Trout Stream ☐ Warm Water Fisheries Stream

B. Name of Municipal Storm Sewer System Owner/Operator: _____

Name of Receiving Water(s): _____

☐ Trout Stream ☐ Warm Water Fisheries Stream

C. ☐ Sampling of Outfall(s) ☐ Sampling of Receiving Stream(s) ☐ Trout Stream

Number of Outfalls: _____ Appendix B NTU Value: _____ Surface Water Drainage Area: _____

IV. ATTACHMENTS. (Check those that apply.)

Indicate below the items attached to this Notice of Intent:

_____ Location map showing the receiving stream(s), outfall(s) or combination thereof to be monitored.

_____ List of known secondary permittees.

_____ Schedule for the timing of the major construction activities.

V. CERTIFICATIONS. (Owner or Operator or both to initial as applicable.)

_____I certify that the site has been mass graded.

_____I certify that the site in compliance with existing E & S plan.

_____I certify that the permittee shall submit any applicable fees.

_____I certify that the site shall reach final stabilization within 180 days.

_____I certify that a schedule for the timing of the various major construction activities, if applicable, is attached to this Notice.

_____I certify under penalty of law that this document and all attachments were prepared under my direction or supervision in accordance with a system designed to assure that qualified personnel properly gather and evaluate the information submitted. Based upon my inquiry of the person or persons who manage the system, or those persons directly responsible for gathering the information, the information submitted is, to the best of my knowledge and belief, true, accurate, and complete. I am aware that there are significant penalties for submitting false information, including the possibility of fine and imprisonment for knowing violations.

Owner's Printed Name: _____ Title: _____

Signature: _____ Date: _____

Operator's Printed Name: _____ Title: _____

Signature: _____ Date: _____

Instructions Notice of Intent - Primary Permittee For Storm Water Discharges Associated With Construction Activity To Be Covered Under The NPDES General Permit Who must file a Notice of Intent (NOI) Form

This Notice of Intent must be typed. Any NOI that contains illegible information will not be accepted, will be returned, and the site will not be granted Permit coverage. All information on this NOI must be submitted to be a valid Notice.

The Owner or Operator or both of an activity that has a discharge of storm water from a site where construction activities occur must apply for a National Pollutant Discharge Elimination System (NPDES) Permit. The Georgia Environmental Protection Division has issued this General NPDES Permit for storm water discharges from construction activities with an effective date of August 12, 2003. The Permit is available is available for review at EPD's offices and on EPD's web page at www.dnr.state.ga.us/epd. It is highly recommended that the permittee read and understand the terms and conditions of the Permit. Contact EPD at the Regional Office or District Office shown on the next page for assistance in completing this NOI.

Where to file NOI Forms -- The NOI and attachments must be sent to the Regional Office or District Office shown on the next page. Please submit only the first two pages of this document plus your attachments, if necessary.

Section I. Site / Primary Permittee Information
Enter the information required. The site/project name is the physical location of the construction activity. Should the site lack a street address, sufficiently describe the facility location so that it can be found by district personnel. If additional space is needed, attach the description to the notice.

The facility contact is the person who the primary permittee has assigned the responsibility for the daily on-site operational control. Please do not leave any blanks in this section.

Section II. Site Activity Information
The start date and completion date are expected for the construction activity for which this NOI is applicable.

Estimated disturbed acreage is the total number of acres, **to the nearest 1/10 acre,** that will be disturbed under this NOI (this includes disturbances by the primary and all secondary permittees.)

Section III. Receiving Water Information
If the facility discharges storm water directly or indirectly (but not through a MS4) to the receiving water(s), enter the name(s) of the receiving water(s) and indicate whether the water(s) is a trout stream or a warm water fisheries stream. Attach to this notice a written description and a map of the location of the receiving water(s).

If the storm water discharges to a municipal separate storm sewer system (MS4), enter the name of the operator of the MS4 (e.g., city name or county name) and the name of the receiving water at the point of discharge from the MS4. A MS4 is defined as a conveyance or system of conveyances (including: roads with drainage systems, municipal streets, catch basins, curbs, gutters, ditches, man-made channels, or storm drains) that is owned or operated by a city or county which is designed or used for collecting or conveying storm water. It may be necessary to contact the city or county that operates the MS4 to determine the name of the receiving waters. Indicate whether the receiving water(s) is a trout stream or a warm water fisheries stream.

Section IV. Certifications
All applicants must sign this certification. Permittees shall initial next to the applicable certification statements on the line provided. Federal and State statutes provide specific requirements as to whom is authorized to sign Notice of Intents. Signing of a Notice of Intent by others is not a valid submittal. Please

be aware Federal and State statues provide severe penalties for submitting false information on this application form. Federal and State regulations require this application to be signed as follows:

- For a corporation: by a responsible corporate officer;
- For a partnership or sole proprietorship: by a general partner or the proprietor; or
- For a municipality, state, Federal or other public facility: by either a principal executive officer or ranking elected official.

GEORGIA EPD DISTRICT OFFICES
All Notice of Intents, Notice of Terminations, Erosion, Sedimentation and Pollution Control Plans, Comprehensive Monitoring Programs, certifications, reports, and any other information shall be sent to the following District offices of EPD:

A. For facilities/sites located in the following counties: Bibb, Bleckley, Chattahoochee, Crawford, Dooly, Harris, Houston, Jones, Lamar, Macon, Marion, Meriwether, Monroe, Muscogee, Peach, Pike, Pulaski, Schley, Talbot, Taylor, Troup, Twiggs, Upson

Information shall be submitted to:
West Central District Office
Georgia Environmental Protection Division
2640 Shurling Drive
Macon, GA 31211-3576
(478) 751-6612

B. For facilities/sites located in the following counties: Burke, Columbia, Emanuel, Glascock, Jefferson, Jenkins, Johnson, Laurens, McDuffie, Montgomery, Richmond, Screven, Treutlen, Warren, Washington, Wheeler, Wilkinson

Information shall be submitted to:
East Central District Office
Georgia Environmental Protection Division
1885-A Tobacco Road
Augusta, GA 30906-8825
(706) 792-7744

C. For facilities/sites located in the following counties: Baldwin, Banks, Barrow, Butts, Clarke, Elbert, Franklin, Greene, Hall, Hancock, Hart, Jackson, Jasper, Lincoln, Madison, Morgan, Newton, Oconee, Oglethorpe, Putnam, Stephens, Taliaferro, Walton, Wilkes

Information shall be submitted to:
Northeast District Office
Georgia Environmental Protection Division
745 Gaines School Road
Athens, GA 30605-3129
(706) 369-6376

D. For facilities/sites located in the following counties: Clayton, Coweta, DeKalb, Fayette, Gwinnett, Heard, Henry, Rockdale, Spalding

Information shall be submitted to:
Mountain District - Atlanta Satellite
Georgia Environmental Protection Division
4244 International Parkway, Suite 114
Atlanta, GA 30354-3906
(404) 362-2671

E. For facilities/sites located in the following counties: Bartow, Carroll, Catoosa, Chattooga, Cherokee, Cobb, Dade, Dawson, Douglas, Fannin, Floyd, Forsyth, Fulton, Gilmer, Gordon, Habersham, Haralson, Lumpkin, Murray, Paulding, Pickens, Polk, Rabun, Towns, Union, Walker, White, Whitfield

Information shall be submitted to:
Mountain District - Cartersville Office
Georgia Environmental Protection Division
P.O. Box 3250
Cartersville, GA 30120-1705
(770) 387-4900

F. For facilities/sites located in the following counties: Appling, Atkinson, Bacon, Brantley, Bryan, Bulloch, Camden, Candler, Charlton, Chatham, Clinch, Coffee, Effingham, Evans, Glynn, Jeff Davis, Liberty, Long, McIntosh, Pierce, Tattnall, Toombs, Ware, Wayne

Information shall be submitted to:

Coastal District- Brunswick Office
Georgia Environmental Protection Division
One Conservation Way
Brunswick, GA 31520-8687
(912) 264-7284

G. For facilities/sites located in the following counties: Baker, Ben Hill, Berrien, Brooks, Calhoun, Clay, Colquitt, Cook, Crisp, Decatur, Dodge, Dougherty, Early, Echols, Grady, Irwin, Lanier, Lee, Lowndes, Miller, Mitchell, Quitman, Randolph, Seminole, Stewart, Sumter, Telfair, Terrell, Thomas, Tift, Turner, Webster, Wilcox, Worth Information shall be submitted to: Southwest District Office Georgia Environmental Protection Division 2024 Newton Road, Albany, GA 31701-3576, (912) 430-4144.

SECTION X: SPECIAL CONDITIONS

SECTION 101 - DEFINITION AND TERMS

Section 101.04 AVAILABLE DAY

Delete the phrase:" at least five hours of"

Section 101.14 COMMISSIONER

Delete as written and substitute the following: the Fulton County Board of Commissioners

Section 101.22 DEPARTMENT

Delete as written and substitute the following: Fulton County Board of Commissioners

Section 101.24 ENGINEER

Delete as written and substitute the following: The Fulton County Director of Public Works, Acting directly or through his duly authorized representative or, as revealed by the context in which used, the entity responsible for the design, engineering and specifications to the plans.

Section 101.31 HOLIDAYS

Substitute: Fulton County for State of Georgia

Delete the following: January 19, Lee's Birthday; 3rd Monday in February, Washington's Birthday; April 26, Confederate Memorial Day; 2nd Monday in October, Columbus Day.

Add the following: Friday following Thanksgiving; Christmas Eve.

Section 101.48 PROPOSAL

The term proposal shall be considered to be synonymous with bid.

Add the following definitions:

Section 101.84 COUNTY

Fulton County Board of Commissioners

Section 101.85 OWNER

Fulton County Board of Commissioners

Section 101.86 CONSTRUCTION MANAGER

The owner's authorized representative, who shall manage the contract on behalf of owner.

SECTION 102 - BIDDING REQUIREMENTS AND CONDITIONS

Section 102.01 PREQUALIFICATION OF BIDDERS
Add the following: This section also applies to Fulton County vendors.

Section 102.03 CONTENTS OF PROPOSAL FORMS
Delete in its entirety and substitute the following:

Bid Submittal

Bids shall clearly indicate the Legal Name, Address, and Telephone Number of the Bidder (Company, Firm, Partnership, and Individual). Bids shall be signed above the Typed or Printed Name and Title of the Signer. The Signer Shall Have the Authority to Bind the Bidder to the Submitted Bid.

One (1) Original Bid Package and Three (3) Copies of the Bid Shall Be Submitted in One Sealed Package, Clearly Marked on the Outside Sealed Bid for " **T243 REYNOLDS ROAD AT WESTLAKE PARKWAY INTERSECTION IMPROVEMENT**" and Addressed to:

Fulton County Department of Purchasing and Contract Compliance
130 Peachtree Street, S.E., Suite 1168
Atlanta, Georgia 30303

If utility work subject to the requirements of O.C.G.A. Section 43-14-8.2 is required for the project, the outside of the Bid shall also be marked, Contractor's Georgia Utility License Number _____.

Information to be Submitted

Failure to submit any required data item may be cause for rejection. Bidders may submit such other data as they deem appropriate. However, voluminous or overly elaborate Bids are discouraged.

Bid Information Shall Include:

1. Bid Form - Provide a Bid Form for each individual project for which a bid is submitted on the forms provided in the Bid Documents.

2. Bid Bond - As required by Section 102.08.

3. Insurance - Refer to Added Section 102.15.

4. Compliance with Equal Opportunity Requirements - Refer to Section 102.07G and Added Section 107.26.

5. Project Schedule - Provide a Project Schedule in Accordance with Section 108.03.

6. Affidavits - Signed, Certified Copies of the Non-Conflict of Interest Certification; Non-Collusion Affidavit of Bidder; and Special Assurances for Utility Contract Work within Public Right-of-Way.

7. Organization Description - Provide a Short Resume of the Organization. Include Types of Similar Services/products Performed/provided by the Firm.

8. Project History - Provide a description of experience the firm has had with projects similar to the one described herein. Include contact person, name of project and telephone number, other than members of your firm that can be contacted regarding this project.

9. Current Workload - Provide the existing workload of personnel to be assigned, showing ability to meet project needs.

10. Organization - Provide a personnel summary of those individuals anticipated to be assigned to the project and the percentage of project for which each will be responsible.

11. Financial Capability - Provide certified copies of financial statements for the previous three (3) years. Note: Privately held companies should submit such financial statements as will allow adequate comparison with the financial data of publicly held companies.

12. References - Provide a list of references, contacts and telephone numbers that may be contacted regarding firm performance on the form provided.

Section 102.05 EXAMINATION OF PLANS, SPECIFICATIONS, SPECIAL PROVISIONS, AND SITE OF THE WORK

Add the following Paragraphs:

The drawings, specifications, contract documents, and all supplemental documents are considered essential parts of the Contract, and requirements occurring in one are as binding as though occurring in all. They are intended to define, describe, and provide for all work necessary to complete the project in an acceptable manner, ready for use, occupancy, or operation by the Owner in case of conflict between the drawings and specifications, the specifications will govern. Figure dimensions on drawings shall govern over scale dimensions, and detailed drawings shall govern over general drawings.

In cases where products or quantities are omitted from the specifications, the description and quantities shown on the drawings shall govern.

The County will not be responsible for Bidders errors or misjudgment, nor for any information on local conditions or general laws and regulations.

The Bidder shall notify the Owner of the date and time he/she proposes to examine the work site(s). The Bidder shall confine the examination to the specific areas designated for the proposed construction, including easements and public rights-of-way. If, due to some unforeseen reason, the Owner's proceedings for obtaining the proposed construction site have not been completed, the bidder may enter the site only with the express consent of the property owner. The Bidder is solely responsible for any and all damages caused and/or resulting from the site examination.

Section 102.06 PREPARATION OF PROPOSAL

Delete the fourth and fifth paragraph, beginning at the Certificate of Current Capacity.

Add the following:

The Bidder shall comply with the relevant requirements of all Federal State, County or local laws. The Bidder warrants that it has not employed or retained any company or person, other than a bona-fide employee working solely for the Bidder, to solicit or secure this Agreement, and that it has not paid or agreed to pay any company or person, other than a bona-fide employee working solely for the Bidder, any fee, commission, percentage, brokerage fee, gifts, or any consideration, contingent upon or resulting from the award or making of this Agreement. For breech or violation of this warranty, the Owner shall have the right to annul this Agreement without liability, or, at its discretion, to deduct from the Agreement price or consideration, or otherwise recover, the full amount of such fee, commission, percentage, brokerage fee, gift or contingent fee.

Delete the paragraph beginning "All bids in excess of $500,000" and subsequent paragraphs.

Section 102.07 REJECTION OF PROPOSALS

In the first sentence of introductory paragraph, delete the phrase: If the Certificate of Current Capacity is not executed under Oath and Substantiated,
Add the following paragraphs to 102.07.H:

EQUAL OPPORTUNITY:
Except as otherwise provided, during the performance of this Contract the Contractor agrees as follows:

A) The Contractor will not discriminate against any employee or applicant for employment because of race, color, religion, sex, or national origin. The Contractor will take affirmative action to ensure that applicants are employed and treated during employment without regard to race, color, religion, sex, or national origin. Such action shall

include, but not be limited to, the following:

1. Employment, upgrading, demotion, or transfer; recruitment or recruitment advertising; layoff or termination; rates of pay or other forms of compensation; and selection for training, including apprenticeship.

2. The Contractor agrees to post in conspicuous places, available to employees and applicants for employment, notices setting forth the provisions of this Equal Opportunity Clause. The Contractor will in all solicitations or advertisements for employees placed by or on behalf of the Contractor, state that all qualified applicants will receive consideration for employment without regard to race, color, religion, sex, or national origin.

B) The Contractor will send to each labor union or representative of workers with which Contractor has collective bargaining agreement or other contract or understanding, a notice advising the labor union or worker's representative of the Contractor's commitments under this Equal Opportunity Clause, and shall post copies of the notice in conspicuous places available to employees and applicants for employment. Contractor agrees to comply with all Lawful agreements, if any, which the contractor had made with any association, union, or other entity, with respect to wages, salaries and working conditions, so as not to cause inconvenience, picketing, or work stoppage.

C) The Contractor shall include the provisions of this Equal Opportunity Article in every subcontract or purchase order so that such provisions will be binding upon each subcontractor or vendor. Failure of a successful bidder or contractor to fully disclose all the contractors or subcontractors to be engaged in a given public contract award may result in cancellation of the contract and imposition of a sanction on such violating bidder or contractor for the period of one (1) year.

Section 102.08 PROPOSAL GUARANTY

Delete in its entirety and substitute:

Each bidder must submit with the bid a separate bid bond for each project, each in an amount not less than five (5) percent of the dollar amount bid. Bonds must be written by a licensed Georgia agent in a company licensed to write surety bonds in the State of Georgia, and acceptable to Fulton County. Bonds are to be made out to Fulton County, Georgia.

Attorneys-in-fact who sign bids and/or contract bonds must file a certified and effectively dated copy of their power-of-attorney with each bond.

Bonds shall be written by a surety listed in the Department of the Treasury circular 570; authorized to do business in the State of Georgia; and shall have an underwriting limitation in excess of 100% of the bid amount. The bonds and surety shall be subject to approval by the Attorney for the County.

Each bidder must submit with the bid proof of ability to provide a separate Performance and a Payment Bond for each project. The Performance bond shall be in an amount equal to One Hundred Percent (100%) of the contract amount and the Payment Bond shall be in an amount equal to One Hundred Ten Percent (110%) of the contract amount. If awarded the Contract, the successful Contractor will be required to provide a separate Performance and Payment Bonds for each project within seven days after Notice of Award and prior to the start of any work.

Section 102.09 DELIVERY OF PROPOSALS

Delete in its entirety and substitute the following:

Any bids received after the stated time and date (included in this contract) will not be considered. It shall be the sole responsibility of the bidder to have his/her bid delivered to the Fulton County Department of Purchasing and Contract Compliance for receipt on or before the above stated time and date. If a bid is sent by U.S. Mail, the bidder shall be responsible for its timely delivery to the Purchasing and Contract Compliance Department. Bids delayed by mail will not be considered, shall not be opened, and arrangements shall be made for their return at the bidders request and expense.

Any bids may be withdrawn up until the date and time set above for receipt of the bids. Any bid not so withdrawn shall, upon opening, constitute an irrevocable offer for a period of sixty (60) days to furnish Fulton County with the

services set forth in the attached Scopes of Work until a bid has been duly submitted and accepted by the Fulton County Board of Commissioners. No guarantee or representation is made herein as to the time between receipt of bid and subsequent Board action. All expenses for making bids to the County are to be borne by the bidder.

Add the following sections:

Section 102.15 INSURANCE REQUIREMENTS

The insurance requirements for this contract are described in this contract document, and the contractor shall comply with, the Owner Controlled Insurance Program, attached to and made a part of this contract.

Any insurance provided by the Contractor pursuant to this bid must be obtained from a company licensed to do business by the Georgia Department of Insurance.

Section 102.16 ADDENDA AND INTERPRETATION

No interpretation of the meaning of the Bid Documents will be made orally to any Bidder. Any request for such interpretation shall be in writing addressed to Fulton County Purchasing Department, Attn: ---------- Assistant Purchasing Agent, 130 Peachtree Street, S.E., Suite 1168, Atlanta, GA, 30303. Each such interpretation shall be given in writing, separately numbered and dated, and furnished to each interested Bidder. Any request not received in time to accomplish such interpretation and distribution will not be accepted.

Only communications from firms which are in writing and signed will be recognized by the County. The County shall not be responsible for oral interpretations given by any County Employee, representative or others. The issuance of an addendum is the only official method whereby interpretation, clarification, or additional information can be given and upon which the bidder may rely.

If any addenda are issue to this Invitation to Bid, the County will attempt to notify all prospective bidders who have secured same. However, it shall be the responsibility of each bidder, prior to submitting the bid, to contact the Fulton County Department of Purchasing and Contract Compliance at (404) 730-4200 to determine if addenda were issued and to make such addenda a part of the bid.

SECTION 103 - AWARD OF CONTRACT AND EXECUTION OF CONTRACT

Add the following:

Any agreement or contract resulting from the acceptance of a bid shall be on a County approved document form. The county reserves the right to reject any agreement that does not conform to the ITB and any County requirement for agreement and contract. The County reserves the right to modify the agreement resulting from this bid upon the recommendation of the County Attorney.

Section 103.01 CONSIDERATION OF PROPOSALS

Delete in its entirety and substitute the following:

The County reserves the right to accept or reject any and/or all bids, to waive irregularities and technicalities, and to request resubmission. Any sole response that is received on the submission date may or may not be rejected by the County depending on available competition and timely needs of the County. There is no obligation on the part of the County to award the contract to the lowest bidder and the County reserves the right to award the contract to the lowest responsible bidder submitting a responsive bid with a resulting agreement which is most advantageous and in the best interest of the County. The County shall be the sole judge of the bid and the resulting agreement that is in its best interest and its decision shall be final. The County also reserves the right to make such investigation as it deems necessary to determine the ability of any bidder to perform the work or service requested. Information the County deems necessary to make this determination shall be provided by the bidder. Such information may include, but shall not be limited to, current financial statements by an independent CPA; verification of availability of personnel; and past performance records.

Section 103.02 AWARD OF CONTRACT

Delete in its entirety and substitute the following:

Subject to Section 103.01, the award(s) shall be made by the Board of Commissioners of Fulton County to the lowest reliable bidder(s) as soon as possible after receipt of bids, taking into consideration price and the responsiveness to the requirements set forth in the Request for Bid. Should the Owner require additional time to award a contract, the time may be extended by mutual agreement between the Owner and the successful Contractor. If an Award of Contract has not been made within sixty (60) days from the bid opening date, or within the extension mutually agreed upon, the Bidder may withdraw the bid without further liability on the part of either party.

Section 103.06 EXECUTION AND APPROVAL OF CONTRACT

Delete in its entirety and substitute the following:

The Owner shall furnish the Contractor(s) the conformed copies of Contract Documents within fifteen (15) days of Notice of Award of Contract, for execution by the Contractor(s) and the Contractor's surety.

Within ten (10) days after receipt, the Contractor shall return all documents properly executed by the Contractor and the Contractor's surety.

Attached to each document shall be the power-of-attorney for the person executing the bonds for the surety and certificates of insurance for the required insurance coverage.

Within thirty (30) days after receipt of the documents executed by the Contractor and his surety with the power-of-attorney and certificates of insurance, the Owner shall complete the execution of the documents. Distribution of the completed documents will be made upon completion.

Should the Contractor and/or surety fail to execute the documents within time specified, the Owner shall have the right to proceed on the Bid Bond accompanying the bid. If the Owner fails to execute the documents within the time limit specified, the Contractor shall have the right to withdraw the Contractor's bid without penalty.

Section 103.07 FAILURE TO EXECUTE CONTRACT

Delete in its entirety and substitute the following:

Subject to O.C.G.A. Section 13-10-1 et. seq. (as amended) and O.C.G.A. 36-91-1 et. seq., failure to execute the Contract, Contract Performance and Payment Bonds, or furnish satisfactory proof of carriage of the insurance required within ten (10) days after receipt of copies of the Contract may be just cause for annulment of the award and for the forfeiture of the proposal guaranty or bid bond to Fulton County, not as a penalty, but as liquidation of damages sustained. At the decision of the County, the award may then be made to the next lowest responsible Bidder, or the work may be re-advertised or constructed by County forces. The Contract and Contract bonds shall be executed in quadruplicate.

SECTION 104 - SCOPE OF WORK

Section 104.03 ALTERATION OF PLANS OR CHARACTER OF WORK

Retain 104.03.B, 104.03.C, and 104.03.D and delete remainder in its entirety and substitute the following:

A. CHANGES IN THE WORK:

The Construction Manager as the Owner's Agent may, pursuant to Fulton County Change Order Procedures (800-6), at any time, without notice to the sureties, by written order designated or indicated to be a change order, make any change in the Work within the general scope of the Contract, including but not limited to changes in the following:

1. In the specifications (including drawings and designs);
2. In the method or manner of performance of the work;
3. In the Owner-furnished facilities, equipment, materials, services, or site; or
4. Directing acceleration in the performance of the work.

Any other written order or oral order (which terms as used in this paragraph (b) shall include direction, instruction, interpretation or determination) from the Construction Manager which causes any such change, shall be treated as a change order under this clause, provided that the Contractor gives the Construction Manager written notice stating the date, circumstances, and source of the order and that the Contractor regards the order as a change order.

Except as herein provided, no other, statement, or conduct of the Construction Manager shall be treated as a change under this clause or entitle the Contractor to an equitable adjustment hereunder. All change orders shall be issued pursuant to the Owner's change order policies and procedures.

If any change under this clause causes an increase in the Contractor's cost of, or the time required for, the performance of any part of the Work under this Contract, whether or not changed by any order, an adjustment may be made and the Contract modified in writing accordingly; provided, however, that except for claims based on defective plans or specifications, no claim for any change under (b) above shall be allowed for any costs incurred more than five (5) days before the Contractor gives written notice as therein required; and provided further, that in the case of defective plans or specifications for which the Owner is responsible, the adjustment shall include any increased cost reasonably incurred by the Contractor in attempting to comply with such defective plans or specifications. The responsibility of the owner for defective plans or specifications under this Section shall be determined on the same standard of liability as applies to claims for delay under Section 105.13B.

If the Contractor intends to assert a claim for an equitable adjustment under this clause, he must, within thirty (30) days after receipt of a written change order under (a) above or the furnishing of a written notice under (b) above, submit to the Construction Manager a written statement setting forth the general nature and monetary extent of such claim, unless this period is extended by the Construction Manager. The statement of claim hereunder may be included in the notice under (b) above.

The Owner may, when changes are minor or when changes would result in relatively small changes in the Contract Price or Contract Time, elect to postpone the issuance of a Change Order until such time that a single change order of substantial importance can be issued incorporating several changes. In such cases, the Owner shall indicate this intent in a written response to the Contractor's request for a change.

No claim by the Contractor for an adjustment hereunder shall be allowed if asserted after final payment under this Contract.

E. CHANGES IN CONTRACT PRICE:

The Contract Price constitutes the total compensation (subject to authorized adjustment) payable to Contractor for performing the work. All duties, responsibilities, and obligations assigned to or undertaken by the Contractor shall be at Contractor's expense without changes in the Contract Price.

The Contract Price may only be changed by a Change Order (800-6). Any claim for an increase in the Contract Price shall be based on written notice delivered to the Construction Manager within fifteen (15) days of the occurrence of the event giving rise to the claim. Notice of the amount of the claim with supporting data shall be delivered within thirty (30) days of such occurrence unless the Construction Manager allows an additional period of time to ascertain accurate cost data. Any change in the Contract Price resulting from any such claim shall be incorporated in a Change Order.

The value of any work by a Change Order of any claim for an increase or decrease in the Contract Price shall be determined in one of the following methods in the order of precedence listed below:

1) By estimating the number of unit quantities of each part of the work which is changed (either increased or

decreased) and then multiplying the estimated number of such unit quantities by the price Bid (which price shall include the Contractor's overhead and profit) for a unit quantity thereof.

2) The Owner shall fix the total lump sum value of the change in the work of the Contractor following submittal within a reasonable time from the Contractor of an estimate of the direct cost of the work, which shall be added to or deducted from the Contract Price (which estimate shall include the Contractor's overhead and profits. If the Contractor does not submit an estimate of cost of the work in a reasonable time or if the Owner and Contractor do not reach agreement on the cost, the Owner may fix the total lump sum value at some reasonable amount. On any lump sum change which involves a net credit to the Owner, no allowance for overhead and profit shall be included.

F. CHANGES IN CONTRACT TIME:

The Contract Time may be changed only by a Change Order (800-6). Changes in the Work described in the subsection above entitled Changes in the Work and any other claim made by the Contractor for a change in the Contract Time shall be evaluated by the Owner with the assistance and input of the Construction Manager and if the conditions warrant, an appropriate adjustment of the Contract Time will be made.

The Owner, when making these evaluations shall take into consideration the amount and scope of Work which has been changed and shall evaluate if the change in Work has affected the critical path activities as currently approved on the Schedule of Record such that it would delay the completion of the Project. If after these evaluations have been made and in the opinion of the Owner, the Contractor is due an extension of time, then it shall be granted by a Change Order and the Owner shall pay the associated cost due the Contractor for direct field costs attributable to such extension.

Section 104.05 MAINTENANCE DURING CONSTRUCTION

Add the following as Section 104.05.H:

H. For this contract, all flaggers must have received training and a certificate upon completion of the training program. All costs for providing certified flaggers will be born by the Contractor and payment to the Contractor will be included in the overall price bid for the project or in the item for Traffic Control when Traffic Control is included in the Contract as a pay item.

Failure to provide certified flaggers as required above shall be reason for the Construction Manager suspending work involving the flagger(s) and withholding all payments due until the Contractor provides the certified flaggers.

Add the following as Section 104.05.I:

I. The Contractor shall not perform work, move equipment or materials on the traveled way that slows traffic flow between the hours of 7:00 a.m. to 9:00 a.m. and 4:00 p.m. to 6:00 p.m. Equipment or materials moved on or across the traveled way at other times shall be done in such a manner as not to unduly interfere with traffic.

In the event that compliance with the objectives stated above is not achieved, the Construction Manager shall close down all operations being performed. The Construction Manager shall also withhold any payments due, when necessary, until the above requirements have been met.

There will be no separate measurement of payment for the work described herein, and all cost, direct or indirect, for complying with this requirement shall be included in the price bid for TRAFFIC CONTROL.

SECTION 105 - CONTROL OF WORK

Section 105.02 PLANS AND WORKING DRAWINGS
Add the following:

SHOP DRAWINGS:

The term "shop drawings" includes as-built drawings, diagrams, layouts, prints, descriptive literature, test reports, samples, calculations, schedules, schematics, material lists and information and items of similar meaning furnished by the Contractor to explain in detail specific portions of the Work required by the Contract.

A. SUBMITTAL REQUIRED:

The Contractor shall furnish to the Construction Manager for review in accordance with the procedure outlined below, as-built drawings and descriptive literature for all manufactured or fabricated products. Performance curves and detailed information on non-manufactured products shall be provided when requested by the Construction Manager. Additional information such as special drawings, schedules, calculations and curves, shall be provided as specifically required in the Contract Documents. All submittals shall become the property of the OWNER with unrestricted rights of publication, disclosure, and use without attribution. Submittals shall include, but are not limited to, the following:

1. Labeling: Labeling equipment shall include:

a. Job name and job location.
b. Specification reference section and numbers.
c. Contract Drawing reference section and numbers.

2. Orderliness of Submittal: Shop drawings shall include in either a typed form or by reference numbers indicated on the submittal all items referenced in the Specification. This list shall follow the sequence of the Specifications.

3. Drawings (as-built): Drawings of equipment and materials shall be job specific and become the OWNER's property. Catalog drawings are not acceptable unless they have been clearly modified for the Project.

B. CONTRACTOR'S REVIEW:

The Contractor shall review and check Drawings and submittals. The Contractor shall indicate Contractor's approval by initials and date, and shall also reference each submittal to the paragraph of the Specifications or the Drawing number where the item appears. If the Drawings or submittal deviate from the Contract Documents, the Contractor shall advise the Construction Manager, in writing, of the deviation and the reasons therefore. The Contractor shall submit a minimum of six (6) copies of all shop drawings to the Construction Manager. All submittal Drawings shall be certified by a Professional Engineer Registered in the State of Georgia. A transmittal form shall accompany each submittal or group of submittal. A separate transmittal sheet shall be used for reference to each numbered paragraph of the Specifications.

C. ENGINEER'S REVIEW:

All submittals will be reviewed within a reasonable time after receipt, stamped, dated and initialed by the Engineer before they are returned to the Contractor.

1. Acceptable submittals will be marked No Exceptions Taken. A minimum of three (3) copies will be retained by the Engineer for the Engineer's and the Owner's use and the remaining copies will be returned to the Contractor.

2. Submittal requiring minor corrections before the product is acceptable will be marked "Make Corrections Noted". The Contractor may not order, fabricate or ship the items included in the submittal until the indicated corrections are made. Drawings must be resubmitted for review prior to installation or use of products.

3. Submittals marked "Amend and Resubmit" must be revised to reflect required changes and the initial review procedure repeated. The "Rejected - See Remarks" notation is used to indicate products which are not acceptable. Upon return of a submittal so marked, the Contractor shall repeat the initial review procedure utilizing acceptable products.

D. DRAWINGS FOR CONSTRUCTION:

Drawings or other submittal not bearing the Engineer's No Exceptions Taken notation shall not be issued to

subcontractor or utilized for construction purposes. No work shall be done or products installed without a drawing or submittal bearing the No Exceptions Taken notation. The Contractor shall maintain at the job site a complete set of shop drawings bearing the Engineer's stamp.

E. SUBSTITUTIONS:

In the event the Contractor obtains the Engineer's approval for the use of products other than that which is called for in the Contract Documents, the Contractor shall, at Contractor's expense and using methods approved by the Engineer, make any changes to structures, piping and electrical work that may be necessary to accommodations these products.

F. CONTRACTOR'S RESPONSIBILITY

Use of the "No Exceptions Taken" notation on shop drawings or other submittal is general and shall not relieve the Contractor of the responsibility of furnishing products of the proper dimension, size, quality, quantity, materials and all performance characteristics, to efficiently perform the requirements and intent of the Contract Documents. The Engineer's review shall not relieve the Contractor of responsibility for errors of any kind on the shop drawings. Review is intended only to assure conformance with the design concept of the Project and compliance with the information given in the Contract Documents. The Contractor is responsible for dimensions to be confirmed and correlated at the job site.

The Contractor is also responsible for information that pertains solely to the fabrication processes or to the technique of construction and for the coordination of the work of all trades. Any materially differing site condition as between what is shown on the Drawings and Specifications and actually found on site shall be immediately reported to the Construction Manager in writing prior to the commencement of Work at the site. Failure of the Contractor to notify the Construction Manager in writing of the differing site condition prior to performance of Work at the site shall constitute a waiver of any claim for additional monies. Any Change Order necessitated by the differing site condition shall be processed as provided under "Changes in the Contract."

Any ambiguities or need for clarification of the Drawings or Specifications shall be immediately reported to the Construction Manager in writing. Any such ambiguity or need for clarification shall be handled by the Construction Manager in writing. No clarification of the Drawings and Specifications hereunder by the Construction Manager shall entitle the Contractor to any additional monies unless a Change Order has been processed as provided by Section 104.03 hereof.

Any work done by the Contractor following a discovery of such differing site condition or ambiguity or need for clarification in the Contract Drawings and Specifications prior to a written report to the Construction Manager shall not entitle the Contractor to additional monies and shall be done at the Contractor's risk.

The Construction Manager will furnish the Contractor five (5) copies of the Contract Drawings and the Specifications, which shall remain the OWNER'S property, one copy of which the Contractor shall have available at all times on the Project site.

Section 105.03 CONFORMITY WITH PLANS AND SPECIFICATIONS
Add the following:

Whenever the Engineer's design is based on a specific product of a particular manufacturer, that manufacturer will be shown on the Drawings and/or listed first in the list of approved manufacturers in the Specifications. Substitutions will be considered if the term "Equal To" precedes the names of approved manufacturers in the Specifications.

The Contractor may, after receiving the Notice to Proceed, submit shop drawings on the substitute product for consideration.

Any Bidder intending to furnish substitute products is cautioned to verify that the item being furnished will perform the same functions and have the same capabilities as the item specified. The Bidder should include in the Bid the cost of accessory items which may be required by the substitute product, even though named, and the cost of any

architectural, structural, mechanical, piping, electrical or other modifications required to accommodate the substitution.

Approval of the Engineer is dependent on the Engineer's determination that the product offered is essentially equal in function, performance, quality of manufacture, ease of maintenance, reliability, service life and other criteria to that on which the design is based, and will require no major modifications to structures, electrical systems, control systems, or piping systems.

Section 105.11 INSPECTION OF WORK
Add the following:

Unless otherwise provided in this Contract, acceptance by the Owner shall be made as promptly as practicable after completion and inspection of all work required by this Contract, or that portion of the Work that the Construction Manager determines can be accepted separately. Prior to any such inspection, contractor shall provide Record Drawings, certified by a Professional Engineer, registered in the State of Georgia, for that portion of the Work to be inspected. Acceptance shall be final and conclusive except as regards latent defects, fraud, or such gross mistakes as may amount to fraud, or as regards the Owner's rights under any warranty or guarantee.

Section 105.13 CLAIMS FOR ADJUSTMENT AND DISPUTES
Delete 105.13 (A) (3)

SECTION 106 - CONTROL OF MATERIALS

Section 106.01 SOURCE OF SUPPLY AND QUANTITY OF MATERIALS

Add the following:

Unless otherwise specifically provided in this contract, all equipment, material, and articles incorporated in the work covered by this contract are to be new and of the most suitable grade for the purpose intended. Unless otherwise specifically provided in this contract, reference to any equipment, material or article, or patented process by trade name, make, or catalog number, shall be regarded as establishing a standard of quality and shall not be construed as limiting competition. The Contractor may, at his option, use any equipment, material, article, or process, which in the judgment of the Construction Manager, is equal to that named. The Contractor shall furnish to the Construction Manager for his approval the name of the manufacturer, the model number, and other identifying data and information respecting the performance, capacity, nature, and rating of the machinery and other equipment which the Contractor contemplates incorporating in the work. When required by this contract, or when called for by the Construction Manager, the Contractor shall furnish the Construction Manager for approval full information concerning the material or articles which he contemplates incorporating in the work. When so directed, samples shall be submitted for approval at the Contractor's expense, with all shipping charges prepaid.

Machinery, equipment, material, and articles installed or used without required approval shall be at the risk of subsequent rejection. All work under this contract shall be performed in a skillful and workmanlike manner.

SECTION 107 - LEGAL REGULATIONS AND RESPONSIBILITY TO THE PUBLIC

Section 107.01 LAWS TO BE OBSERVED

Delete in its entirety and substitute the following:

The Contractor's attention is directed to the fact that all applicable Federal, State and County laws, municipal ordinances, and the rules and regulations of all authorities having jurisdiction over construction of the Projects shall apply to the Contract throughout, and they will be deemed to be included in the Contract as though written out in full herein. The Contractor shall keep fully informed of all laws, ordinances and regulations of the Federal, State, County, and municipal governments or authorities in any manner affecting those engaged or employed in the Work or the materials used in the Work or in any way affecting the conduct of the Work and of all orders and decrees of bodies or tribunals having any jurisdiction or authority over same. If any discrepancy or inconsistency should be discovered in these Contract Documents or in the Drawings or Specifications herein referred to, in relation to any

such law, ordinance, regulation, order or decree, the Contractor shall herewith report the same in writing to the Owner. The Contractor shall at all times observe and comply with all such existing and future laws, ordinances and regulations, and shall protect and indemnify the Owner and the Owner's agents against the violation of any such law, ordinance, regulation, order or decree, whether by the Contractor or by the Contractor's employees.

Section 107.02 PERMITS AND LICENSES
Add the following:

Permits and licenses of a temporary nature, including building permits, necessary for the prosecution of the Work shall be secured and paid for by the Contractor. Permits, licenses and easements for permanent structures or permanent changes in existing facilities shall be secured and paid for by the Owner, unless otherwise specified. The Contractor will pay all sales, consumer, use and other similar taxes required by the law of the place where the Work is performed. The Contractor is obligated to comply with all local and state sales and use tax laws. The Contractor shall provide the Owner with documentation to assist the Owner in obtaining sales and/or use tax refunds for eligible machinery and equipment used for the primary purpose of reducing or eliminating air or water pollution as provided for in Chapter 48-8-3(36) and (37) of the Official Code of Georgia Annotated. Acceptance of the project as completed will not be made by the Owner until the Contractor has fully complied with this requirement.

Section 107.07 PUBLIC CONVENIENCE AND SAFETY
Add the following:

The Contractor shall install all necessary appurtenances along highways, streets, and roadways in accordance with MUTCD and Fulton County regulations, with reference to construction operations, safety, traffic control, road maintenance, and repair.

A. PROTECTION OF TRAFFIC:

The contractor shall provide suitable signs, barricades, and lights for protection of traffic in locations where traffic may be endangered by Roadway improvements. They shall be removed as soon as conditions which necessitated their placement has been cleared. No highway, street, or roadway shall be closed without first obtaining permission from the proper authority.

1. The contractor shall provide, erect and maintain all necessary barricades suitable and sufficient lights and other traffic control devices; shall provide qualified flaggers where necessary to direct traffic; shall take all necessary precautions for the protection of the work and the safety of the public. Flaggers shall be certified by attending a Georgia DOT approved flagged training program.

2. Roadway construction traffic devices and their installation shall be in accordance with the current Manual on Uniform Traffic Control Devices for Streets and Highways.

3. Placement and removal of construction traffic control devices shall be coordinated with the DOT and Fulton County a minimum of 48 hours in advance.

4. Installation of construction traffic control devices shall be performed prior to commencement of channel improvement activities. Construction traffic control devices shall be removed immediately following their useful purpose.

5. Traffic control devices used intermittently, such as Flagmen Ahead signs, shall be removed and replaced when needed.

6. Channelization devices shall be positioned preceding an obstruction at a taper length as required by current Manual on Uniform Traffic Control Devices for streets and Highways, appropriate for the speed limit at location. Channel devices shall be patrolled to ensure that they are maintained in the proper position throughout their period of use.

Section 107.13 PROTECTION AND RESTORATION OF PROPERTY AND LANDSCAPE

B. Erosion and Siltation Control Add the following:

All measures for the control of erosion and siltation must follow the guidelines as specified in the Georgia Erosion and Sedimentation Act of 1975 (as amended).

C: Pollution Add the following:

All measures required to minimize water pollution to affected waters shall be undertaken in the proposed Work. To achieve this end, regard shall be given to the protection of the watershed natural cover, measures instituted to assure minimal siltation and bank erosion from the construction, and other measures taken to reduce water pollution to a minimum. The Contractor must adhere to the Soil Erosion and Sedimentation Act of 1975 (as amended) and the Erosion and Sedimentation Control Ordinance of Fulton County in effect at the time of the issuance of this agreement.

Any area used or involved in the Project disturbed by the Contractor, shall be restored to present or better condition even though such area is outside the limits of that specified for grading, grassing or landscaping.

All chemicals used during Project construction or furnished for Project operation, whether herbicide, pesticide, disinfectant, polymer, reactant or of other classification, must show approval of either EPA or USDA. Use of all such chemicals and disposal of residues shall be in strict conformance with instructions.

Necessary sanitary conveniences for the use of the labor on the Work shall be erected and maintained by the Contractor to comply with all applicable laws and regulations and in accordance with all Safety requirements. Their use shall be strictly enforced.

Should the Contractor so desire, he may build shanties or other structures for housing tools, machinery, and supplies, but they will be permitted only in locations approved by the Construction Manager, and their surroundings shall be maintained at all times in a sanitary and satisfactory manner. On or before the completion of the Work, all such structures shall be removed, together with all rubbish and trash, at the expense of the Contractor.

The Contractor shall restore all easement areas upon completion of the Work and before leaving the Project Work Area. The Owner reserves the right to withhold funds for unsatisfactory clean-up and easement restoration.

F. MAILBOXES

Delete subsection F and substitute the following:

The Contractor shall have responsibility for removing and relocating all mailboxes to an area outside of the construction limits but still accessible for mail deliveries and convenient to the mail carrier and the patron during the entire time of construction. It may be necessary for the Contractor to confer with the Post Office serving the area. The U.S. Postal Service has provided guidelines for the final placement of mailboxes as shown in the following figures.

As soon as construction has progressed to the stage that the mailbox may be erected in its permanent position, the Contractor shall coordinate the erection with the patron and the Post Office serving the area. Any damages to the posts or mailboxes due to the removal and/or relocations by the Contractor will remain the responsibility of the Contractor, all damages posts and/or mailboxes shall be replaced and installed by the Contractor at his expense, excluding mailbox enclosures of masonry construction.

Any cost or costs to the Contractor for removing, relocating or installations of mailboxes as stated above, shall be included in the overall bid price.

(A) STRAIGHT LINE CURB
Plumb line from box front should be even with outside edge of curb. Bottom of box should be 42" from street level on both straight and cul-de-sac curbs.

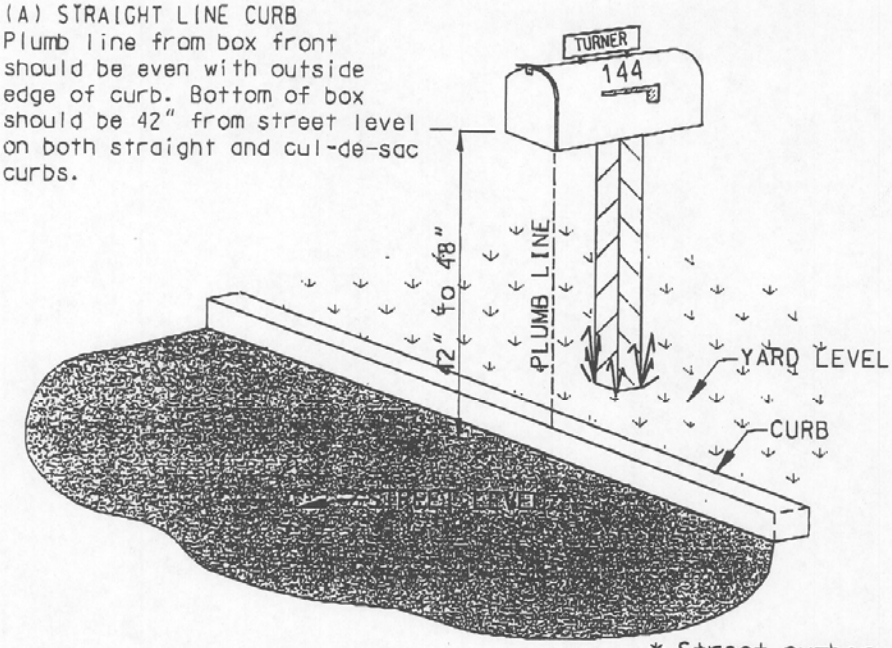

* Street number on all boxes

(B) CUL-DE-SAC CURB
Plumb line from box front to street should be 6" beyond curb. This is very important in a cul-de-sac area. Otherwise. the carrier would have to risk hitting the box, curb, and/or lawn in order to serve your box.

* Street number on all boxes

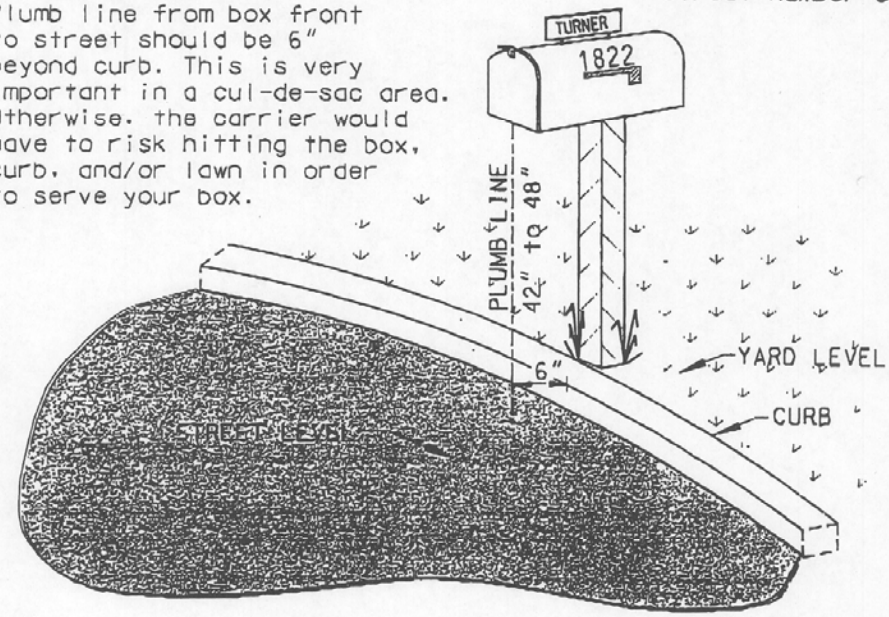

U.S. POSTAL SERVICE MAILBOX GUIDELINES

The carrier can best serve/approach your box when it is positioned to the right of your driveway (when facing house), unless thereis a cement drain on that side or, of course, if you live on a corner and your box and driveway are not on the same street.CAUTION : Be careful not to dig into telephone or power lines when erecting mail box.

Section 107.16 OPENING SECTIONS OF PROJECT TO TRAFFIC

Add the following:

The Owner shall have the right to take possession of or use any completed or partially completed part of the Work. Prior to such possession or use, the Construction Manager shall furnish the Contractor an itemized list of work remaining to be performed or corrected on such portions of the Project as are to be possessed or used by the Owner, provided that failure to list any item of Work shall not relieve the Contractor of the responsibility for compliance with the terms of the Contract. Such possession or use shall not be deemed an acceptance of any Work under the Contract. While the Owner has such possession or use, the Contractor, notwithstanding the provisions of the article of this Contract, entitled, Permits and Responsibilities, shall be relieved of the responsibility for the loss or damage to the Work resulting from the Owner's possession or use. If such prior possession or use by the Owner delays the progress of the Work or causes additional expense to the Contractor, such shall be transmitted to the owner in writing and an equitable adjustment in the Contract Price or the time of completion may be made, and the Contract may be modified in writing accordingly.

Section 107.18 ACQUISITION OF RIGHT OF WAY
Add the following paragraphs:

The Owner will provide, as indicated in the Contract Documents, the lands upon which the Work is to be done, rights-of-way for access thereto, and such other lands which are designated for the use of the Contractor. The Contractor shall confine the Contractor's Work and all associated activities to the easements and other areas designated for the Contractor's use. The Contractor shall comply with any limits on construction methods and practices which may be required by easement agreements. If, due to some unforeseen reason, the necessary easements are not obtained as scheduled, the Contractor may receive an extension of Contract Time, dependent upon the effect on the critical path activities of the project schedule.

Notwithstanding any provision to the contrary herein, should the owner fail to obtain the necessary rights-of-way contemplated in the scope of work, and should the work to be performed be stopped, delayed and/or enjoined by a court-of-law or otherwise, either party may terminate this agreement pursuant to the Termination for Convenience Clause and such clause shall govern in all respects any termination stemming from the Owners failure to obtain the necessary rights-of-way contemplated in the scope of work.

The Contractor shall inspect all easements and rights-of-way to insure that the County has obtained all land and rights-of-way as shown in the plans necessary for completion of the Work to be performed pursuant to the Contract Documents. The Contractor shall comply with all stipulations contained in easements acquired by the Department.

SECTION 107.20 NO WAIVER OF LEGAL RIGHTS
Add the words AND WARRANTY to the title of this section.

Add the following:

WARRANTY:
The Contractor shall warrant for a period of one year from the date of the final acceptance that the completed project is free from all defects due to faulty products or workmanship and the Contractor shall promptly make such corrections as may be necessary by reason of such defects. The Owner will give notice of observed defects with reasonable promptness. In the event that the Contractor should fail to make such repairs, adjustments, or other work that may be made necessary by such defects, the Owner may do so and charge the Contractor the cost thereby incurred. The Performance Bond shall remain in full force and effect through the warranty period.

Section 107.21 CONTRACTOR'S RESPONSIBILITY FOR UTILITY PROPERTY AND SERVICES

A. Overhead or Underground Utility Facilities
Add the following:

The Contractor is responsible for the location of above and below ground utilities and structures which may be affected by the Work.

B. Utility Facility Owners Add the following:

The contractor, as required by Georgia Law (Code Section 25-9-1 through 25-9-13), shall call the Utilities Protection Center (UPC) at 325-5000 or 1-800-282-7411, and all utilities, agencies or departments that own/or operate utilities in the vicinity of the construction work site to verify the location of existing utilities.

The following steps shall be exercised to avoid interruption of existing utility service:

1. Provide the required notice to the utility owners and allow them to locate their facilities according to the Georgia Law.

2. Expose the facility to verify its true location and grade in advance of roadway improvement. Repair or have repaired, any damage to utilities resulting from locating or exposing their true location.

3. Avoid utility damage and interruption by protecting it with means or methods recommended by the utility owner.

C. Cooperation With Facility Owners Add the following:

The Contractor shall so schedule the Work that the operation of any existing facility, including water mains and sewers, will not be interrupted. In the event certain tie-ins or other operations make it absolutely necessary to interrupt the operation of existing facilities, the Owner will be notified and such work will be done at a time and in a manner acceptable to the Construction Manager. Bypasses of untreated or partially treated wastes which are absolutely necessary to complete the Work shall be shown on the Construction Progress Schedule. The Construction Manager shall be notified in writing of the date and time, and duration of such bypasses at least ten (10) days in advance.

The Contractor shall protect from damage all existing improvements or utilities at or in proximity to the site of the Work, and shall repair or restore any damage to such facilities resulting from failure to exercise reasonable care, in the performance of work. If the Contractor fails or refuses to repair any such damage promptly, the Owner may have the Work performed and charges the cost thereof to the Contractor.

Prior to implementing Roadway Improvements, the Contractor shall verify all existing utilities true vertical and horizontal location within the vicinity. In order to avoid conflicts between existing and proposed facilities or utilities, the Contractor shall take whatever means may be necessary to protect existing facilities or utilities during performance of Roadway Improvements, as approved by the Engineer/Construction Manager. No payment will be made for the relocation of existing utilities or for any work associated with the protection of existing facilities or utilities unless contract pay items are included.

The owner and/or operators of private or public utilities shall have access to such utilities at all times for the installation, maintenance, adjustment, repair and operation of said utilities. No extra compensation will be allowed because of the delay or interference caused by such work.

The plans show the approximate location of certain underground utilities, gas mains, water lines, drains, telephone cables, and structures according to information presented and available in the records. The determination of the exact location and other data on all existing facilities, their proper protection, maintenance and support during the prosecution of the work, is the express responsibility of the Contractor.
Wherever existing utilities are encountered which conflict in actual position and location with the proposed work, the Contractor shall promptly notify the utility owner and Construction Manager.

Temporary support, beams or bridging for utilities shall be left in place during backfill operations unless otherwise directed by the Construction Manager.

All costs in connection with supporting, protecting, relocating, removal repair of damage, restoration of other ground structures, whether or not they are shown on the plans, not borne by the owner or owners of the utilities shall be borne by the Contractor.

No separate payment will be made for any work performed as herein above specified unless otherwise stated in the bid as a separate payment item. All costs in connection therewith shall be included in the contract price for the item to which the work pertains.

The Contractor shall be solely and directly responsible to the owner and/or other operator of such utility properties for any damage, injury, expense, loss, inconvenience or delay, or for any suits, actions, claims or any character brought on account of any damages which may result from the carrying out of the work.

The utilities shown on the plans are for the Contractor's benefit and are to be considered as approximate in location and are not all inclusive or exact. It is the Contractor's responsibility to contact all utilities and have them locate their lines in the field. Utilities shall be contacted a minimum of two (2) working days prior to commencing of construction.

It will be the Contractor's responsibility to conform to all the requirements of the specifications as they relate to cooperation with utility owners and the protection of utility installations that exist on the Project.

The Contractor will not be paid for any delays or extra expense caused by utility facilities, obstructions, or any other items not being removed or relocated to clear construction in advance of his work. It shall be the responsibility of the Contractor to coordinate his work with any work to be performed by others in any right-of-way clearance and arrange a schedule of operations that will allow for completion of the Project without undue delay.

Information concerning utility facilities known to exist within the Project limits is shown on the contract drawings.

Add the following SECTION 107.26 EQUAL OPPORTUNITY

Except as otherwise provided, during the performance of this Contract the Contractor agrees as follows:

The Contractor will not discriminate against any employee or applicant for employment because of race, color, religion, sex, or national origin.

The Contract will take affirmative action to ensure that applications are employed and treated during employment without regard to race, color, religion, sex, or national origin. Such action shall include but not be limited to, the following.

Employment, upgrading, demotion, or transfer; recruitment or recruitment advertising; layoff or termination; rates of pay or other forms of compensation; and selection for training, including apprenticeship.

The Contractor agrees to post in conspicuous places, available to employees and applicants for employment, notices setting forth the provisions of this Equal Opportunity Clause.

The Contractor will in all solicitations or advertisement for employees placed by or on behalf of the Contractor, state that all qualified applicants will receive consideration for employment without regard to race, color, religion, sex, or national origin.
The Contractor will send to each labor union or representative of workers with which Contractor has collective bargaining agreements or other contracts or understanding, a notice advising the labor union or worker's representative of the Contractor's commitments under this Equal Opportunity Clause, and shall post copies of the notice in conspicuous places available to employees and applicants for employment. Contractor agrees to comply with all Lawful agreements, if any, which the contractor had made with any association, union, or other entity, with respect to wages, salaries, and working conditions so as not to cause inconvenience, picketing, or work stoppage.

The Contractor shall include the provisions of this Equal Opportunity article in every subcontract or purchase order so that such provisions will be binding upon each subcontractor or vendor.

Failure of a successful bidder or contractor to fully disclose all the contractors or subcontractors to be engaged in a given public contract award may result in cancellation of the contract and imposition of a sanction on such violating bidder or contractor for the period of one (1) year.

SECTION 108 - PROSECUTION AND PROGRESS

Section 108.01 SUBLETTING OF CONTRACT
Delete the following:

All that remaining portion of the fifth paragraph starting with the sentence beginning: Except for certain items exempted.

Add the following:

In accordance with the provisions stated above, the following items are designated Specialty Items whenever they appear in the Contract:

All Grassing Items
All Fencing Items
All Highway Lighting Items
All Highway Sign Items
All Guardrail Items (Except Bridge Handrail)
All Utility Items
All Landscaping Items
All Pressure Grouting, Slab Removal and Replacement
All Permanent Traffic Markings
All Signal Systems
Construction Layout

If the Contractor elects to sublet a Specialty Item, no work on any such Specialty Items shall be begun without prior approval of the necessary subcontract.

The Contractor's cost for Construction Layout shall be fully documented prior to deduction from the original Contract Amount.

Section 108.02 NOTICE TO PROCEED:

Retain as written except as follows:

Delete the second paragraph which begins "Within 10 calendar days..." and substitute the following:
Within 10 available days after the Notice to Proceed has been issued, the Contractor shall begin the work. Contract Time charges for available day projects will begin on the date the Contractor starts to work, or 10 days after the Notice to Proceed, whichever comes first. For Completion Date Projects Contracts Time charges shall begin on the day after the Notice to Proceed.
(When Applicable): Right-of-Way Acquisition on this project is complete with the exception of parcel numbers ____,____,_____,____, _____,_____,_____,_____,. These parcels will be available no later than _____, _____200___.

The Owner has the authority to suspend the Work wholly or in part, for as long as he may deem necessary, because of unsuitable weather, or other conditions considered unfavorable for continuing the Work, or for as long as he may deem necessary by reason of failure of the Contractor to carry out orders given, or to comply with any provision of the Contract. If the performance of all or any portion of the Work is suspended or delayed by the Owner, in writing, for an unreasonable period of time (not originally anticipated, customary, or inherent to the construction industry) and the Contractor believes that additional compensation and/or contract time is due as a result of such suspension or delay, the Contractor shall submit to the Owner, in writing, a request for adjustment within 7 calendar days of receipt of the notice to resume work. The request shall set forth the reasons and support for such adjustment.

Upon receipt, the Owner will evaluate the Contractor's request. If the Owner agrees that the cost and/or time required for the performance of the Contract has increased as a result of such suspension and the suspension was

caused by conditions beyond the control of, and not the fault of the Contractor, its suppliers, or subcontractors at any approved tier, and not caused by weather, the Owner will make an adjustment (excluding profit) and modify the Contact in writing accordingly. The Owner will notify the Contractor of his/her determination whether or not an adjustment of the Contract is warranted.

No contract adjustment will be allowed unless the Contractor has submitted the request for adjustment within the time prescribed.

No contract adjustment will be allowed under this clause to the extent that performance would have been suspended or delayed by any other cause, or for which an adjustment is provided for or excluded under any other term or condition of this Contract.

Section 108.03 PROSECUTION AND PROGRESS

Retain as written and add the following:

“Any work necessary to be performed by the Contractor to complete the project on time after regular working hours, on Saturdays, Sundays, or Legal Holidays, shall be performed without additional expense to the County.”

“The County reserves the right to prohibit work on weekends or holidays when major activities or events are scheduled or anticipated.”

Delete as written and substitute the following:

“Immediately after execution and delivery of the Contract and before the first partial payment is made, the Contractor shall deliver to the Engineer an estimated construction Progress Schedule, in triplicate, in a form satisfactory to the Engineer showing the proposed dates of commencement and completion of each of the various subdivisions of work required under the Contract Documents and the anticipated amount of each monthly payment that will become due to the Contractor in accordance with the Project Schedule. This Schedule shall be in a bar chart or critical path method format and in sufficient detail to assure adequate planning and execution of the work and to assist the Engineer in appraising the reasonableness of the proposed Schedule and evaluating progress of the work.

The Progress Schedule must be activity oriented and not event oriented, except for determination of milestones. The Schedule shall be prepared under the supervision of the Contractors’ regular management personnel to show the order and interdependence of activities and the sequence in which the work is to be accomplished as planned by the Contractor. The selection and number of activities shall be subject to the Engineer’s approval.

Contractor shall submit at monthly intervals an updated Progress Schedule showing the status of completed and remaining work. The monthly update shall indicate the date upon which activities were started and completed. The time estimated to complete partially completed activities shall be indicated. Changes in contract work shall be incorporated into the Progress Schedule no later than the first monthly update following the date that a written directive is issued.

In addition to the updated Schedule, the monthly update shall include a narrative report which shall include a description of current and anticipated problem areas, delaying factors and their impact, and an explanation of corrective actions taken or proposed.

The complete Progress Schedule, including a schedule of anticipated earnings, shall be submitted within thirty (30) calendar days after receipt of Notice to Proceed. The approved Progress Schedule shall then be the Schedule to be used by the Contractor for planning, organizing, and directing the work, and for reporting progress. If the Contractor thereafter desires to make changes in the Schedule, he shall notify the Engineer in writing stating the reasons for the change. If the Engineer considers these changes to be of a major nature, he may require the Contractor to revise and submit for approval, without additional cost to the County, all of the affected portions of the Progress Schedule to show the effect of the entire project.

Failure to submit an updated schedule with the monthly payment request will be cause for rejection of the payment request. If, in the opinion of the Engineer, the Contractor falls behind in his schedule or will not be able to complete

the project within the time limits, he may require the Contractor to revise his schedule and put additional equipment and/or manpower on the job as so ordered at no additional cost to the County.

Section 108.06 TEMPORARY SUSPENSION OF WORK

Add the following paragraphs:

"In the event of temporary suspension of work, or during inclement weather, or whenever the Engineer shall direct, the Contractor will, and will cause his subcontractors to protect carefully his and their work and materials against damage or injury from the weather. If, in the opinion of the Engineer, any work or materials shall have been damaged or injured by reason of failure on the part of the Contractor or any of his subcontractors to protect his work, such materials shall be removed and replaced at the expense of the Contractor.

Should the County be prevented or enjoined from proceeding with work either before or after the start of construction by reason of any litigation or by any reason beyond the control of the County, the Contractor shall not be entitled to make or assert claim for damage by reason of said delay; but time for completion of the work will be extended to such reasonable time as the County may determine will compensate for time lost by such delay with such determination to be set forth in writing."

SECTION 108.07 DETERMINATION OF CONTRACT TIME
Add the following:

H. It is the intent of this Special Provision to require the Contractor to have the road open to two-way traffic as soon as possible. The date of beginning and times for the completion of the work are therefore essential conditions of the Contract Documents.

SECTION 108.08 LIQUIDATED DAMAGES
Add the following:

At the County's convenience and not to it prejudice the County may provide written notice of the commencement of the assessment of liquidated damages.

SECTION 109 - MEASUREMENT AND PAYMENT

Section 109.07 PARTIAL PAYMENTS

Delete section 109.07.A and Substitute the following

As long as the gross value of completed work is less than 50% of the total Contract amount, or if the Contractor is not maintaining his construction schedule to the satisfaction of the Engineer, the County shall retain 10% of the gross value of the completed work as indicated by the current estimate certified by the Engineer for payment.

After the gross value of completed work becomes equal to or exceeds 50% of the total Contract amount within a time period satisfactory to the County, then the total amount to be retained shall be 5% of the gross value of the completed work as indicated by current estimates, until all pay items are substantially completed. When time charges have ceased as defined in 108.07G and pending final acceptance and final payment, the amount retained may be further reduced at the discretion of the Engineer, subject to agreement by the Contractor and his Surety.

Section 109.07.G: Delete as written and substitute the following:
Interest will be paid upon funds retained pursuant to Section 109.07.A. in accordance with Georgia Law.

Delete Paragraph 109.07.H and Substitute the Following:

The Contractor shall promptly pay each subcontractor upon the receipt of payment from the County. Such payment shall be made from the amount paid to the Contractor pursuant to the subcontractor's work. The Contractor shall also maintain the records of the percentage retained from payments to the Contractor pursuant to such

subcontractor's work. The Contractor shall procure agreements from each subcontractor requiring each subcontractor to pay their subcontractors, agents and employees in a similar manner. The County reserves the right to inquire of any subcontractor, supplier, materialman, or subcontractor, the status of any indebtedness of the Contractor. The County further reserves the right to require the contractor to designate on each instrument of payment exceeding $400.00 to subcontractors, suppliers, materialmen, and subcontractors that such payment is on account of the work under this Contract. Neither the County nor the Contract or Program Managers shall have any obligation to pay any subcontractor except as otherwise required by law.

Add as Section 109.07.I

I. INVOICES AND REQUESTS FOR PAYMENT: Invoices and requests for payment shall describe in sufficient detail to permit meaningful review by the Contract Manager the work completed for which the invoice or request is being submitted and shall not contain any provision adding to or altering the terms of the contract with regard to timeliness of payment or any other term of the contract. Any invoice containing any such provision shall be denied and is of no force or effect whether or not executed, accepted, or paid by the County. The Contractor shall re-submit the invoice or request for payment in a form consistent with the terms of the contract.

Section 109.08 FINAL PAYMENT

Delete in its entirety: Replace with the following:

Final Payment: Upon completion by the Contractor of the Work, including the receipt of any final written submissions of the Contractor, including drawings, and documentation of completion of punch list items, and the approval thereof by the COUNTY, the COUNTY will pay the Contractor a sum equal to 100 percent (100%) of the compensation set forth herein, less any assessed liquidated damages and the total of all previous partial payments, paid or in the process of payment.

Invoices and requests for payment shall not contain any provision adding to or altering the terms of the contract with regard to timeliness of payment or any other term of the contract. Any invoice containing any such provision shall be denied and is of no force or effect whether or not executed, accepted, or paid by the County. The Contractor shall re-submit the invoice or request for payment in a form consistent with the terms of the contract.

Final payment will be acknowledged by the Contractor on a form provided by the County, which form the Contractor will execute and return to the County. The County shall send such form to the Contractor by certified mail, return receipt requested. The return receipt card shall be conclusive evidence of tender by the County of the final payment. The Contractor agrees that acceptance of this final payment shall be in full and final settlement of all claims arising against the County or the Contract Manager for work done, materials furnished, costs incurred, or otherwise arising out of this Agreement and shall release the County from any and all further claims of whatever nature, whether known or unknown for and on account of said Agreement, and for any and all work done, and labor and materials furnished, in connection with same. The failure of the Contractor within 120 days of tender of the final payment to execute and return the release form or to notify the County of any dispute of the final payment shall operate as an acceptance of the County's tender as correct and shall operate as and be a release to the County and its Construction Manager from all claims of liability under this contract and for any act or neglect of the County or the Construction Manager.

In the event the Contractor timely disputes the amount of the final payment as stated therein, the amount due the Contractor shall be deemed by the Contractor and the County to be an unliquidated sum and no interest shall accrue or be payable on the sum finally determined to be due to the Contractor for any period prior to final determination of such sum, whether such determination be by agreement of the Contractor and the County or by final judgment of the proper court in the event of litigation between the County and the Contractor. The Contractor specifically waives and renounces any and all rights it may have under Section 13-6-13 of the Official Code of Georgia and agrees that in the event suit is brought by the Contractor against the County for any sum claimed by the Contractor under the Contract or for any extra or additional work, no interest shall be awarded on any sum found to be due from the County to the Contractor in the final judgment entered in such suit. All final judgments shall draw interest at the legal rate, as specified by law. Also, the Contractor agrees that notwithstanding any provision or provisions of Chapter 11 of Title 13 of the Official Code of Georgia that the provisions of this contract

control as to when and how the Contractor shall be paid for the Work. Further, the Contractor waive and renounces any and all rights it may have under Chapter 11 of Title 13 of the Official Code of Georgia.

The Contractor expressly agrees that the payment provisions within this Contract shall supersede the rates of interest, payment periods, and contract and subcontract terms provided for under the Georgia Prompt Pay Act, O.C.G.A. Section 13-11-1 et seq., and that the rates of interest, payment periods, and contract and subcontract terms provided for under the Prompt Pay Act shall have no application to this Contract and are hereby waived. The County shall not be liable for any late payment interest or penalty.

SECTION 150 TRAFFIC CONTROL

Add the following:

150.01 DESCRIPTION: This section as supplemented by the Plans, Specifications, and Manual on Uniform Traffic Control Devices (MUTCD) shall be considered the Traffic Control Plan. Activities shall consist of furnishing, installing, maintaining, and removing necessary traffic signs, barricades, lights, signals, cones, pavement markings, and other traffic control devices and shall include flagging and other means for guidance and protection of vehicular and pedestrian traffic through the Work Zone. This Work shall include both maintaining existing devices (excluding Traffic Signals) and installing additional devices as necessary in construction work zones.

For this project, all references in the Standard Construction Details listed below to Type I Barricades, Type II Barricades, Types “A” flashing-lights and Type “C” steady burn lights are deleted, except that Type “C” lights will be required for tapers in nighttime lane closures.
For this project, all references to flags on construction warning signs in the Standard Construction Details listed below are deleted except for signs which are mounted at less than seven feet (7’) in height (portable signs).

Standard Construction Details

- Lane Closure on Two Lane Highway
- Lane Closure on Multi-Lane Undivided Highway
- Traffic Control General Notes, Standard Legend, Miscellaneous Details

In addition, G20-1, G20-2A, and W20-1 signs shown on Georgia Standards 9102, 9106, 9107, and applicable Standard Construction Details shall conform to Part VI of the MUTCD, 2003 Edition.

When any provisions of this Specification or the Plans do not meet the minimum requirements of the MUTCD, the MUTCD shall govern. The 2003 Edition of the MUTCD shall be in effect for the duration of the project.

The Contractor shall designate, prior to beginning any work, a Work Site Traffic Supervisor who shall be responsible for initiating, installing and maintaining all traffic control devices as described in Sub-Section 150.01. The Work Site Traffic Supervisor shall have to least one year experience directly related to work site traffic control in a supervisory or responsible capacity and shall have been certified by the American Traffic Services Association Work Site Traffic Supervisor Certification Program or and equal approved by Georgia Department of Transportation.

The Work Site Traffic Supervisor shall have a copy of the MUTCD on the job site. Copies of the current MUTCD may be obtained from:

U.S. Government Printing Office
Superintendent of Documents
Mail Stop: SSOP
Washington, D.C. 20402-9328

The Work Site Traffic Supervisor or his approved responsible representative shall be available on a twenty-four hour basis with access to all equipment and materials needed to maintain traffic control and handle traffic related situations. The Work Site Traffic Supervisor shall ensure that routine deficiencies are corrected within a twenty-four hour period.

The Work Site Traffic Supervisor shall be available on the site within forty-five (45) minutes after notification of an emergency situation, prepared to positively respond to repair the roadway or to provide alternate traffic arrangements. Failure to actively pursue corrective measures as directed will result in a payment deduction in accordance with Sub-Section 150.08 from monies due or to become due the contractor. In addition, in emergency situations, Standard Specification Sub-Section 105.15 is amended to delete the requirement of forty-eight hours prior to the Engineer proceeding to maintain the Work operations.

The Work Site Traffic Supervisor shall verify daily that the Portable Variable Message Signs are in good operating condition and are displaying the appropriate messages.

To ensure that the provisions of this Sub-Section are adequately adhered to, the Work Site Traffic Supervisor shall submit on a weekly basis a completed Traffic Control Report Form for the Project Engineer's review and comment.

Failure to comply with the provisions of this modification of Section 150 shall be grounds for decertification and/or removal of the Work Site Traffic Supervisor from the project.

Failure to maintain a designated Work Site Traffic Supervisor or failure to comply with the provisions of this Document will result in cessation of all activities except traffic and erosion control and such other activities deemed to be necessary for Project maintenance and safety.

A. All traffic control devices used during the construction of a project shall meet the Standards utilized in the MUTCD, and shall comply with the requirements of these Specifications, Project Plans, and Special Provisions. Reference is made to Subsections 104.05, 107.07, and 107.09.

B. All reflectorization for construction (black on orange) signs, object markers, and channelization devices shall meet the requirements of Section 913, Type II or III unless otherwise specified. All other signs shall meet the requirements of Type I unless otherwise specified.

C. No work shall be started on any project until the appropriate traffic control devices have been placed in accordance with Project requirements. Changes to traffic flow shall not commence unless all labor, materials, and equipment necessary to make the changes are available on the Project.

D. The Contractor shall secure the Engineer's approval of the Contractor's proposed plan of operation, sequence of work and methods of providing for the safe passage of vehicular and pedestrian traffic before it is placed in operation. The proposed plan of operation shall supplement the approved traffic control plan, proposed by the Contractor, and shall be submitted to Fulton County for approval in accordance with Subsection 104.03 of the Standard Specifications.

Some additional traffic control details will be required prior to any major shifts of traffic. The traffic control details shall include, but not be limited to, the following:

1. A detailed drawing showing traffic location and laneage for each step of the change.

2. The location, size, and message of all signs required by the MUTCD, Plans, Special Provisions, and other signs as required to fit conditions.

3. The method to be used in, and the limits of, the obliteration of conflicting lines and markings.

4. Type, location, and extent of new lines and markings.

5. Horizontal and vertical alignment and superelevation rates for detours, including cross section and profile grades along each edge of exist of existing pavement.

6. Drainage details for temporary and permanent alignments.

7. Location, length, and/or spacing of channelization and protective devices (temporary barrier, quardrail, barricades, etc.)

8. Starting time, duration and date of planned change.

9. For each traffic shift, a paving plan, erection plan, or work site plan, as appropriate, detailing workforce, materials, and equipment necessary to accomplish the proposed work. This will be the minimum resource allocation required in order to start the work.

E. The above details shall be submitted to the Engineer for approval at least 14 days prior to the anticipated traffic shift. The Contractor shall have traffic control details for a traffic shift which has been approved by the Engineer prior to commencement of the physical shift. All preparatory work relative to the traffic shift which does not interfere with traffic shall be accomplished prior to the designated starting time. The Engineer and the Contractor's representative will verify that all conditions have been met prior to the Contractor obtaining materials for the actual traffic shift.

F. Traffic control devices shall be in acceptable condition when first erected on the project and shall be maintained in accordance with Subsection 104.05 throughout the construction period. All unacceptable traffic control devices shall be replaced within 24 hours. When not in use, all traffic control devices shall be removed, placed or covered so as not to be visible to traffic. If traffic control devices are left in place for more than ten days after completion of the Work, the County shall have the right to remove such devices, claim possession thereof, and deduct the cost of such removal from any monies due, or which may become due, the Contractor.

G. The Department reserves the right to restrict construction operations when, in the opinion of the Engineer, the continuance of the Work would seriously hinder traffic flow on days immediately before, on, or after holidays or other days in which unusual traffic conditions exist, including threatening or inclement weather.

150.02 TEMPORARY TRAFFIC CONTROL ZONES:

A. In addition to the other provisions contained herein, work zone traffic control shall be accomplished using the following means and materials:

1. Portable advance warning signs as required by the contract or meeting the requirements of the MUTCD and Sub-Section 150.03.

2. Portable sequential or flashing arrow panels as shown in the Plans or Specifications for use on Interstate or multi-lane highway lane closure only, shall be a minimum size of 48" high by 96" wide with not less than 15 lamps used for the arrow. The arrow shall occupy virtually the entire size of the arrow panel and shall have a minimum legibility distance of one mile. The minimum legibility distance is that distance at which the arrow panel can be comprehended by an observer on a sunny day, or clear night. Arrow panels shall be equipped with automatic dimming features for use during hours of darkness. The arrow panels shall also meet the requirements as shown in the MUTCD. The sequential or flashing arrow panels shall not be used for lane closures on two-lane, two-way highways when traffic is restricted to one-lane operations in which case, appropriate signing, flaggers and when required, pilot vehicles will be deemed sufficient.

3. Portable changeable message signs meeting the requirements of Section 632 and the MUTCD.

4. Channelization devices meeting the standards of the MUTCD and Subsection 150.05.

5. Precast concrete barrier meeting the requirements of Section 622.

6. Temporary traffic signals meeting the requirements of Section 647.

7. Pavement marking materials complying with Subsection 150.04.A.

B. LANE CLOSURES:

1. All lanes closures shall have prior approval of the Engineer. Lane closures that require same direction traffic to be split around the Work Area will not be approved for roadways with posted speeds of 35 mph or greater, excluding turn lanes.

2. On multilane highways where traffic has been shifted to the inside lanes for overnight use, the entrance and exit ramps shall have channelization devices placed on both sides of the ramp. The temporary ramp taper length shall be greater than, or equal to, the existing taper length. Interim EXIT gore signs shall be placed at the ramp divergence. Channelization device spacing shall be 10 feet for 200 feet in advance of the temporary gore, and 10 feet for the first 100 feet of the temporary gore.

3. Termination Area: The transition to normal or full width highway at the end of a lane closure shall be a maximum of 150 feet.

4. To provide the greatest possible convenience to the public in accordance with Subsection 107.07, the Contractor shall remove all signs, lane closure markings, and devices immediately when lane closure work is completed or temporarily suspended for any length of time or as directed by the Engineer.

C. TRAFFIC PACING METHOD:

1. PACING OF TRAFFIC: With prior approval from the Engineer, traffic may be paced allowing the Contractor up ten (10) minutes maximum to work in or above all lanes of traffic for the following purposes:

a. Placing bridge members or other bridge work.

b. Placing overhead sign structures.

c. Other work items requiring interruption of traffic.

The Contractor shall provide a uniformed police officer with patrol vehicle and blue flashing light for each direction of pacing. The police officer, Engineer, and flaggers at ramps shall be provided with a radio which will provide continuous contact with the Contractor.

When ready to start the work activity, the police vehicle will put into the travel lanes and act as a pilot vehicle slowing the traffic thereby providing a gap in traffic allowing the Contractor to perform the Work. Any on-ramps between the pace and the work area shall be blocked during pacing of traffic, with a flagger properly dressed and equipped with a Stop/Slow paddle. Each ramp should be opened after the police vehicle has passed.
Pilot vehicles shall travel at a safe pace speed, desirably not less than 20 mph interstate and 10 mph non-interstate. The Contractor shall provide a vehicle to proceed in front of the police vehicle and behind the other to inform the Contractor's work force when all vehicles have cleared the area.

Traffic will not be permitted to stop during pacing except in extreme cases as approved by the Engineer.

2. METHODS OF SIGNING FOR TRAFFIC PACING: At a point not less than 1,000 feet in advance of the beginning point of the pace, the Contractor shall erect and cover a W-special sign (72 inch x 72 inch)

with a Type “B” flashing light, with the legend “ TRAFFIC SLOWED AHEAD SHORT DELAY” (See Detail 150-A). A portable changeable message sign may be used in lieu of the W-special sign. On divided highways this sign shall be double indicated. A worker with a two-way radio shall be posted at the sign, and upon notice that the traffic is to be paced shall turn on the flashing light and reveal the sign. When traffic is not being paced, the flashing light shall be turned off and the sign covered or removed. W-special signs are reflectorized black on orange, Series “C” letters and borders of the size specified.

D. The Contractor’s truck and other vehicles shall travel in the direction of normal roadway traffic unless separated by positive barrier, or when construction activity necessitates otherwise, and shall not reverse direction except at intersection, interchanges, or approved temporary crossings.

E. The Contractor shall ensure that dust, mud, and other debris from construction activities do not interfere with normal traffic operations or adjacent properties.

F. Existing street lighting shall remain lighted as long as practical and until removal is approved by the Engineer.

G. Adequate temporary lighting shall be provided at all nighttime work sites where workers will be immediately adjacent to traffic.

H. For their own protection, workers in or adjacent to traffic during nighttime operation shall wear reflectorized vests.

I. The parking of Contractor’s and/or workers personal vehicles within the work area or adjacent to traffic is prohibited.

J. The Work Site Traffic Supervisor shall monitor the work to ensure that all the rocks, boulders, construction debris, stockpiled materials, equipment, tools and other potential hazards are kept clear of the travelway. These items shall be stored in a location, in so far as practical, where they will not be subject to a vehicle running off the road and striking them.

K All existing pedestrian walkways shall be maintained. Whenever changes to the worksite necessitate changes to existing walkways, temporary walkways shall be provided and maintained, with appropriate signs as necessary, to allow safe passage of pedestrian traffic.

150.03 SIGNS:

A. When required for proper traffic control during construction of the project, all existing guide, warning, and regulatory signs shall be maintained by the Contractor in accordance with these Specifications. Existing street name signs shall be maintained at street intersections. All existing illuminated signs shall remain lighted and be maintained by the Contractor.

B. When not in use, all inappropriate traffic signs or portions thereof shall be removed, placed or covered so as not to be visible to traffic. All construction warning signs shall be removed within seven calendar days after time charges are stopped or pay items are complete. Subsequent punch list or other work to be performed shall be accomplished utilizing temporary construction warning signs that shall be removed daily.

C. The Contractor shall not remove any existing signs and supports without prior approval form the Engineer. All existing signs and supports which are to be removed shall be stored and protected as directed by the Engineer, and become the property of the Department unless otherwise specified in the contract documents.

D. Interim guide, warning, or regulatory signs required to direct traffic shall be furnished, installed, reused and maintained by the Contractor in accordance with the MUTCD, the Plans, Special Provisions, or as directed by the Engineer. These signs shall remain the property of the Contractor. The bottom of all interim signs shall be at least seven feet above the level of pavement edge.

E. Existing special guide signs on the Project shall be maintained until conditions require a change in location or legend content. When change is required, existing signs shall be modified and continued in use if the required modification can be made within existing sign borders using design requirements (legend, letter size, spacing, border, etc.) equal to that of the existing signs, or of Subsection 150.03.E.5. Differing legend designs shall not be mixed in the same sign.

F. MATERIALS – INTERIM SIGNS:

1. POSTS – Posts for all interim signs shall meet the requirements of Section 911 except that green or silver paint may be used in lieu of galvanization for steel posts or structural shape posts. Wood posts are not required to be pressure treated.

Post for all interim signs shall be constructed to yield upon impact unless the posts are protected by guardrail, portable barrier, impact attenuator or other type of positive barrier protection. Unprotected posts shall meet the breakaway requirements of the “1985 AASHTO Standard Specifications for Structural Supports for Highway Signs, Luminaries and Traffic Signals”. Unprotected post splices will not be permitted any higher than four inches above the ground line to lessen the possibility of affecting the undercarriage of a vehicle.

2. SIGN BLANKS AND PANELS – All sign blanks and panels shall conform to Section 912 of the Specifications except that blanks and panels may be ferrous based or other metal alloys. Type 1 and Type 2 sign blanks shall have a minimum thickness of 0.08 inches regardless of the sign type used. Alternative sign blank materials (composites, poly carbonates, fiberglass reinforced plastics, recycled plastics, etc.) shall have a letter of approval from the Office of Materials and Research for use as interim construction signs before these materials are allowed to be incorporated into the work. Signs shall be painted to prevent rust if other metals are used in lieu of aluminum. Plywood blanks or panels will not be permitted

G. All existing, interim and new permanent signs shall be installed so as to be completely visible for an advance distance in compliance with the MUTCD. Limbs, brush, construction equipment and materials shall be kept clear of the driver’s line of sight to the signs.

H. Portable advance warning signs shall be placed ahead of construction in accordance with Part VI of the MUTCD and shall include a series of at least three advance road construction (W20-1) signs placed at the termini of the project. The series shall have the legend ROAD WORK (1500 FEET, 1000 FEET, AND 500 FEET). In addition to the above, multi-lane divided highways shall also have the legend ROAD WORK (2 MILES, 1 MILE, AND ½ MILE.) On-ramps and at grade intersecting roadways shall be signed with a minimum of one portable ROAD WORK AHEAD sign. Portable advance warning signs shall be in place only during times that construction is in progress or as directed by the Engineer. Signs shall be removed or covered at all other times.

Construction warning signs which are mounted at less than seven feet in height (portable signs) shall have two 18 inch x 18 inch fluorescent red-orange or orange-red warning flags mounted on each sign. Project mileage indicated on the G20-1 sign shall be the actual project mileage rounded up to the nearest whole mile. All construction warning signs on divided highways shall be double indicated (i.e., on the left and right sides of the roadway.)

I. The sequential or flashing arrow panels shall be placed on the shoulder at or near the point where the lane

closing transition begins. The panels shall be mounted on a vehicle, trailer, or other suitable support. Vehicle mounted panels shall be provided with remote controls. Minimum mounting height shall be seven feet above the roadway to the bottom of the panel, except on vehicle mounted panels which should be as high as practical.

J. The portable changeable message sign, when specified, shall be placed ahead of construction activities and shall meet the requirements of Section 632 and the MUTCD.

K. The flashing beacon assembly, when specified, shall be used in conjunction with construction warning signs, regulatory, or guide signs to inform traffic of special road conditions which require additional driver attention. The flashing beacon assembly shall be installed in accordance with the requirements of Section 647.

150.04 PAVEMENT MARKINGS

A. Generally, full pattern pavement markings in accordance wit Section 652 and in conformance with Section 3A and 3B, except 3B-3 and 3B-5, of the MUTCD are required on all courses before the roadway is opened to traffic. No passing zones shall be marked to conform to Section 150.04 E. During construction and maintenance activities on all highways open to traffic, both existing markings and markings applied under this Section shall be fully maintained until Final Acceptance. If the pavement markings are, or become, unsatisfactory in the judgment of the Engineer due to wear, weathering, or construction activities, they shall be restored immediately. On resurfacing projects pavement markings shall be provided on all surfaces that are placed over existing markings. On widening and reconstruction projects (where the lane configuration is altered from the pre-construction layout) pavement markings will be as required by the Plans or the Engineer. On new construction projects pavement marking plans will be provided.

B. MATERIALS: All traffic striping applied under this Section shall be a minimum four inches in width and shall conform to the requirements of Section 652, except as modified herein. Raised pavement markers (RPMs) shall meet the requirements of Section 654. Markings on the final surface course which must be removed shall be a removable type. The Contractor will be permitted to use paint, thermoplastic, or tape on pavement which is to be overlaid as part of the project, unless otherwise directed by the Engineer. Partial (skip) reflectorization (i.e. reflectorizing only a portion of a stripe) will not be allowed.

C. USAGE: The Contractor shall sequence the work in such a manner as to allow the installation of markings in the final lane configuration at the earliest possible stage.

Inappropriate or conflicting existing pavement markings shall be removed.

When shifting of traffic necessitated removal of centerline, lane lines, or edge lines, all such lines shall be removed prior to, during, or immediately after any change so at to present the least interference with traffic.

Before any change in traffic lane(s) alignment, marking removal equipment shall be present on the project for immediate use. If marking removal equipment failures occur, the equipment shall be repaired or replaced (including leasing equipment if necessary), so that the removal can be accomplished without delay.

Except for the final surface, marking on asphaltic concrete may be obliterated by an overlay course, when approved by the Engineer. When an asphaltic concrete overlay is placed for the sole purpose of eliminating conflicting markings and the in place asphaltic concrete section will allow, said overlay will be eligible for payment only if designated in the Plans. Overlays to obliterate lines will be paid for only once and further traffic shifts in the same area shall be accomplished with removable markings. Only the minimum asphaltic concrete thickness required to cover lines (generally 60 lb./sq. yd. Of Asphaltic Concrete “H”) will be allowed. Excessive build-up will not be permitted. When an overlay for the sole purpose of eliminating conflicting markings is not allowed, the markings no longer applicable shall be removed in accordance with Subsection 656.02. The elimination of conflicting pavement markings by overpainting with paint or liquid asphalt is not acceptable.

D. Raised pavement markers (RPMs) are required as listed below for all asphaltic concrete pavements before the

roadway is open to traffic. When Portland Cement Concrete is an intermediate or final surface and is open to traffic, one available day is allowed for cleaning and drying before the installation of RPMs is required.

E. EXCEPTIONS FOR INTERIM MARKINGS: Some exceptions to the time of placement and pattern of markings are permitted as noted below; however, full pattern pavement markings are required for the completed project.

1. TWO-LANE, TWO-WAY ROADWAYS

a. SKIP LINES: All interim skip (broken) stripe shall conform to Section 652 except that stripes shall be at least four feet long with a maximum gap of 36 feet. On curves greater than six degrees, a two-foot stripe with a maximum gap of 18 feet shall be used. In lane shift areas skip lines will not be allowed. Solid Lines will be required. Interim skip lines must be replaced with markings in full compliance with Section 652 prior to expiration of the 14 available day period.

Interim raised pavement markers may be substituted for the interim skip (broken) stripes. If raised pavement markers are substituted for the four foot interim skip stripe, four markers spaced at equal interim raised pavement markers are substituted for interim skip lines.

Interim raised pavement markers shall be retro-reflective, shall be the same color as the pavement markers for which they are substituted, and shall be visible during daytime.

The type of interim marker and method of attachment to the pavement shall be approved by the Office of Materials and Research but in no case will the markers be attached by the use of nails.

The interim raised pavement markers shall be maintained until the full pattern pavement markings are applied. At the time full pattern pavement markings are applied the interim raised markers shall be removed in a manner that will not interfere with application of the full pattern pavement markings.

b. NO PASSING BARRIER: On two-lane, two-way roadways for periods not to exceed three calendar days where skip centerlines are in place, no-passing zones shall be identified by using post or portable mounted DO NOT PASS regulatory signs (R4-1 24” x 30”) shall be placed at the end of each no-passing zone. Post mounted signs shall be placed in accordance with the MUTCD. Portable signs shall have a minimum vertical height of three feet above the pavement surface to the bottom of the sign and be secured in such a manner as to not be easily blown over or misaligned.

c. EDGELINES:

(1) Bituminous Surface Treatment Paving: Edgelines will not be required on intermediate surfaces (including asphaltic concrete leveling for bituminous surface treatment paving) that are in use for a period of less than 60 calendar days except at bridge approaches, on lane transitions, lane shifts, and in such other areas as determined by the Engineer. On the final surface, edgelines shall be placed within 30 calendar days of the time that the final surface was placed.

(2) All Other Types of Pavement: Edgelines will not be required on intermediate surfaces that are in use for a period of less than 30 calendar days except at bridge approaches, on lane transitions, lane shifts, and in such other areas as determined by the Engineer. On the final surface, edgelines shall be placed within 14 calendar days of the time that the surface was placed.

d. MISCELLANEOUS PAVEMENT MARKINGS: School zones, railroads, stopbars, symbols, words and other similar markings shall be placed on final surfaces conforming to Section 652 within 14 calendar days of completion of the final surface. On intermediate surfaces these markings will generally not be required unless specified by the Engineer because of special conditions or when the intermediate surface will be in use for more than 45 calendar days.

2. MULTI-LANE HIGHWAYS – WITH NO PAVED SHOULDER(S) OR PAVED SHOULDER(S) FOUR FEET OR LESS

a. UNDIVIDED HIGHWAYS (INCLUDES PAVE CENTER TURN LANE)

(1) Centerlines and No-Passing Barrier – Full pattern centerlines and no-passing barriers shall be restored before nightfall.

(2) Lanelines – Interim skip (broken) stripe as described in Subsection 150.04. E.1.a. may be used for periods not to exceed three calendar days. In lane shift areas skip lines are not allowed. Solid lines are required.

(3) Edgelines – Edgelines shall be placed on intermediate and final surfaces within three calendar days of obliteration.

F APPLICATION OF PAVEMENT MARKINGS: The Contractor shall furnish layout, clean as necessary, and preline the surface for the placement markings applied under this Section. All existing marking tape on final surfaces shall be removed prior to placement of final markings.

Pavement markings shall re-establish No-Passing Zones in the locations and configuration that existed prior to construction. Existing No-Passing Zones shall be clearly identified as to location prior to construction by staking or erection of DO NOT PASS and PASS WITH CARE signs. On new location projects and on projects where either horizontal or vertical alignments have been modified, the location of No-Passing Zones will be identified by the Engineer.

G. MOBILE OPERATIONS: When pavement markings (centerlines, lane lines, and edge lines) are applied I a continuous operation by moving vehicles and equipment, the following minimum equipment and warning devices shall be required in addition to the requirements of the MUTCD:

1. A lead vehicle is required for two-way traffic conditions and shall have an approved sequential or flashing arrow panel mounted so as to be easily visible to oncoming traffic. A lead vehicle is not required for low volume off-system routes and one-way traffic applications.
2. The work vehicle applying markings shall have a sequential or flashing arrow panel mounted on the rear. If the work vehicle is also functioning as the lead vehicle then an approved arrow panel shall be mounted so as to be easily visible to oncoming traffic. The work vehicle shall follow directly behind the lead vehicle.
3. The work vehicle placing cones shall follow directly behind the work vehicle applying the markings. The cone work vehicle shall have a sequential or flashing arrow panel mounted on the rear.
4. For multi-lane roadways a protection vehicle shall follow the above vehicles and the protection vehicle shall also display a prominent sign with the legend PASS ON LEFT (RIGHT). On interstate and limited access roadways, the protection vehicle shall be equipped with a truck mounted attenuator (TMA) that is certified for impacts not less than 45 mph in accordance with NCHRP 230.
5. All vehicles shall be equipped with the official slow moving vehicle symbol sign and left and right-side rear mounted flashing yellow lights.

150.05 CHANNELIZATION

A. GENERAL: Channelization shall clearly delineate the travelway through the work zone and alert drivers and pedestrians to conditions created by work activities in or near the travelway. Channelization shall be done in accordance with the plans and specifications, the MUTCD, and the following requirements.

1. Types of Devices Permitted for Channelization in Construction Work Zones:

a. DRUMS:

(1) DESIGN: Drums shall meet the minimum requirement of the MUTCD and shall be reflectorized as required in Subsection 150.01.C.

(2) APPLICATION: Drums shall be used as the required channelizing device to delineate the full length of a lane closure, shift, or encroachment, except as modified by this Subsection.

(a) TRANSITION TAPERS AND LANE CLOSURES: Drums shall be used on all transition tapers. The minimum length of the approach transition taper for a lane closure, shift, or encroachment for highways with posted speed of 45 mph or greater shall be equal to the lane width of lateral shift (Ft.) x the posted speed limit (Mph), (L = WS), but not less than 150 feet. For multiple lane closures, only one lane shall be closed per taper with a minimum tangent length of 2L between tapers. The length of a closed lane, excluding the transition taper, will be limited to two miles, unless otherwise approved or directed by the Engineer. Drums shall be placed the full length of the taper spaced at maximum intervals in fee equal to the numerical speed limit (EXAMPLE: 55 MPH Speed Limit = 55 feet maximum spacing).

For taper lengths on urban, residential or other streets where the posted speed is 40 mph or less, the minimum length of the approach transition taper shall be computed using the formula L + WS2/60. Greater taper length shall be used when required for individual situations.

Drums with stead burning lights, for the length of the taper only, are required if the condition exists into the night.

(b) LONGITUDINAL CHANNELIZATION: Drums shall be spaced as listed below for various roadside work conditions except as modified by Subsection 150.06. Spacing shall be used for situations meeting any of the conditions listed as follows:

(1) 50 FOOT SPACING MAXIMUM:

(a) For difference in elevation exceeding two inches.

(b) For healed sections no steeper than 4:1 as shown in Subsection 150.06, Detail 150-E.
(2) 100 FOOT SPACING MAXIMUM:

(a) For difference in elevation of two inches or less

(b) Flush areas where equipment or workers are within ten feet of the travel lane

(3) 200 FOOT SPACING MAXIMUM: Where equipment or workers are more than ten feet from travel lane. Lateral offset clearance to be four feet from the travel lane.

(a) For paved areas eight feet or greater in width that are paved flush with a standard width travel lane.

(b) For disturbed shoulder areas not completed to typical section that are flush to the travel lane and considered a usable shoulder.

When the appropriate signs are posted advising of conditions such as soft or low shoulder, drum may be removed after shoulders are completed to typical section and grassed and after guardrail or other safety devices have been installed.

b. VERTICAL PANELS:

(1) DESIGN: All vertical panels shall have a minimum of 270 square inches of retro-reflective area facing the traffic and shall meet the requirements of the MUTCD.

(2) APPLICATION: Lane encroachment by the drum on the travel way should permit a remaining lane width of ten feet. When encroachment reduces the travel way to less than ten feet, vertical panels shall be used to restore the travel way to ten feet or greater. No other application of verbal panels will be permitted.

c. CONES:

(1) DESIGN: All cones shall be a minimum of 28 inches in height regardless of application and shall meet the requirements of the MUTCD.

(2) APPLICATION: For longitudinal channelizing only, cones will be permitted for daylight closures or minor shifts. (Drums are required for all tapers.) The use of cones for nighttime work will not be permitted.

d. BARRICADES:

(1) DESIGN: The use of Type I and Type II barricades will not be permitted. Type III barricades shall meet the minimum requirements of the MUTCD and shall be reflectorized as required in Subsection 150.01.C.

(2) APPLICATION: Type III barricades shall be placed as required by the plans, the Standards, and as directed by the Engineer.

e. WARNING LIGHTS:

(1) DESIGN: All warning lights shall meet the requirements of the MUTCD.

(2) APPLICATION:

(a) Type A low intensity flashing lights shall be used as shown in the Plans, the Standards, and as directed by the Engineer. Flashing lights are not required for advance warning signs in Subsection 150.03.H.

(b) Type C Steady Burn lights shall be used on all tapers when the condition exists into the night. Steady burn lights shall also be used as shown in the Plans, the Standards, and as directed by the Engineer.

f. PORTABLE BARRIERS:

(1) DESIGN: Portable Barriers shall meet the requirements of Section 622 – PRECAST CONCRETE BARRIER.

(2) APPLICATION: Portable Barrier shall be placed as required by the plans, standards, and as directed by the Engineer. When Portable Barrier is located 20 feet or less from a travel lane, yellow reflectors shall be fixed to the top of the barrier at intervals not greater than 50 feet and shall be

mounted approximately two inches above the barrier. The reflectors shall be either 10”x10” square Type V (or equal) reflective sheeting mounted on flat-sheet panels, or 8” diameter center-mounted sealed prismatic reflex reflectors housed in an aluminum backing with a single grommeted hole. Approach end of Portable Barrier shall be flared or protected by and impact attenuator (crash cushion) or other approved treatment in accordance with Georgia Standard 4960, Construction Details and Standard Specifications.

On interstate or other controlled access highways where lane shift or crossovers cause opposing traffic to be separated by less than 40 ft., precast concrete barrier shall be used as a separator.

150.06 EXCAVATION ADJACENT TO A TRAVEL LANE:

Construction work involving trenching adjacent to a travel way shall not begin until the Contractor is able to continuously place the required typical section to within two inches of the existing pavement elevation, or heal the remaining difference in elevation to the traveled way as shown in Detail 150-E.

Channelization devices and placement during the construction period shall conform to the requirements of Subsection 150.05 and Details 150-B, 150-C, 150-D, and 150-E. In addition to the signs specified in Section 150 and the MUTCD, a W-20 sign with the legend “(LEFT) (RIGHT) LANE NARROWS” with two flags shall be kept just off the paving edge and 500 feet upstream of the point where channelization devices are erected on the paving edge.

A. STONE BASES, SOIL AGGREGATE BASES, AND SOIL BASES: Drop-offs in elevation of more than two inches between surfaces carrying, or adjacent to, traffic will not be allowed for more than 24 hours. However, where the Contractor has demonstrated the ability to continuously excavate and open as a start up area for periods not to exceed 48 hours.

B. ASPHALT BASES/BINDERS: Drop-offs in elevation of more than two inches between surfaces carrying or adjacent to traffic will not be allowed for more than 48 hours.

C. PORTLAND CEMENT CONCRETE AND CEMENT STABILIZED BASES: Construction work adjacent to the traveled way which involves these types of bases shall be healed within 48 hours after the curing period is complete for each section placed. During the placement period, traffic control devices will be in accordance with Subsection 150.05 and Detail 150.B.

D. MISCELLANEOUS EXCAVATIONS OR DROP-OFFS ADJACENT TO TRAVELWAY: Work such as drainage structures, utility facilities, or any other work which results in a drop-off adjacent to the travel way shall be performed expeditiously so as to minimize the exposure to the hazard. As soon as practical, the excavation shall be backfilled to the minimum requirements of Detail 150-E. In no case will the drop-off be allowed to exist more than five calendar days. This may require stage construction, such as plating and backfilling the incomplete work.

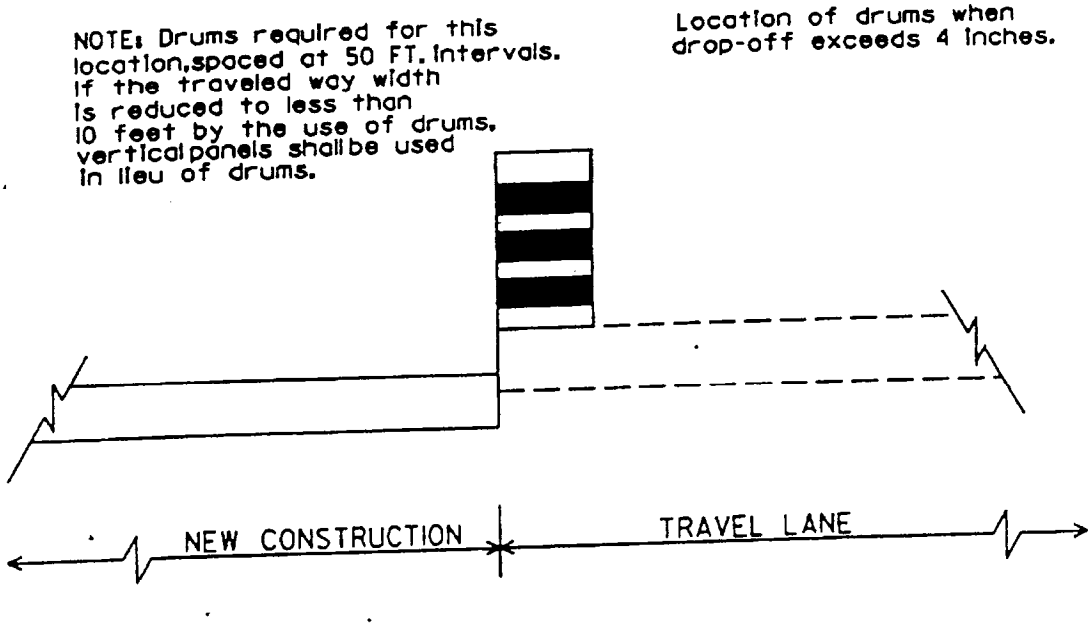

DROP-OFF GREATER THAN 4 INCHES

DETAIL 150-B

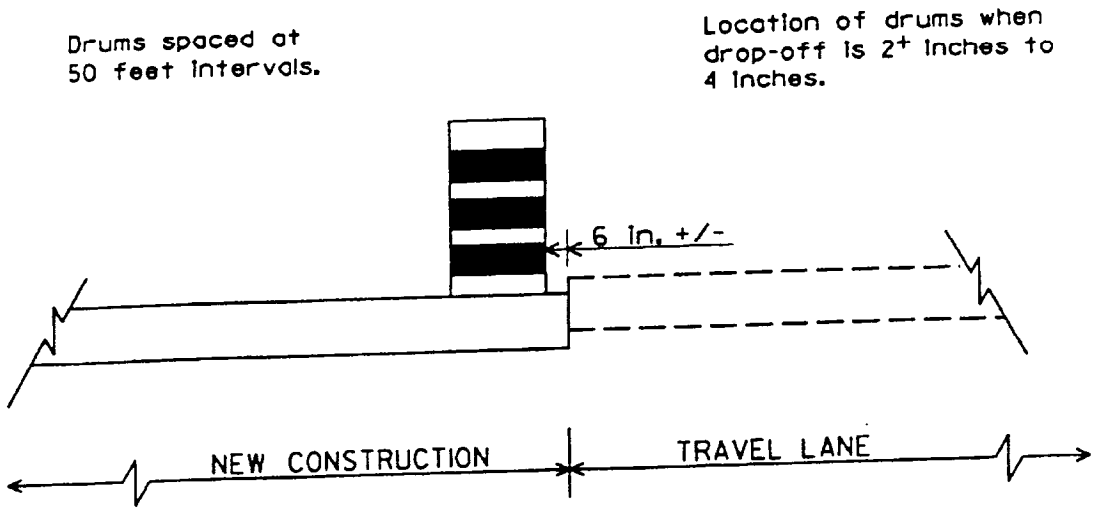

DROP-OFF OF 2+ INCHES TO 4 INCHES

DETAIL 150-C

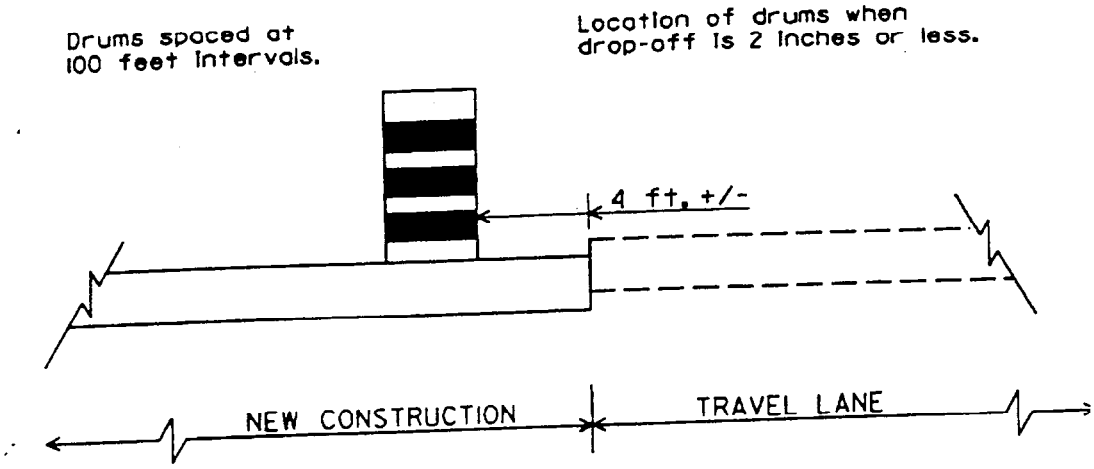

DROP-OFF OF 2 INCHES OR LESS

DETAIL 150-D

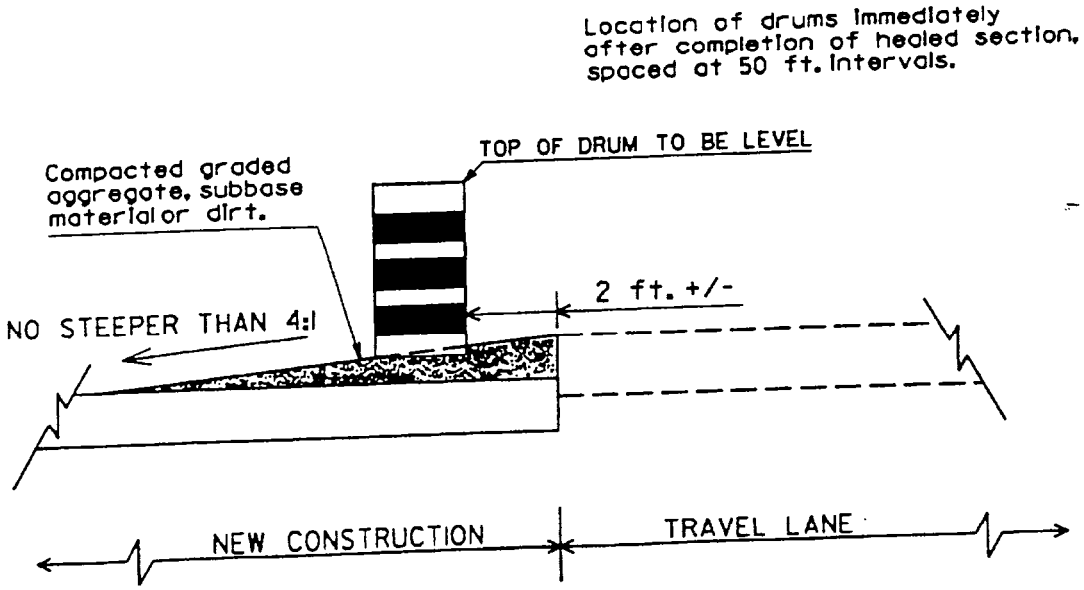

HEALED SECTION

DETAIL 150-E

150.07 FLAGGING AND PILOT CARS:

A. Flaggers shall be provided as required to handle traffic, as specified in the Plans or Special Provisions, and as required by the Engineer.

B. All flaggers shall meet the requirements of the MUTCD and shall have received training and a certificate upon completion of the training from a Department approved training program. Failure to provide certified flaggers as required above shall be reason for the Engineer suspending work involving the flagger(s) until the Contractor provides the certified flagger(s).

C. Flaggers shall wear high-visibility clothing in compliance with the MUTCD and shall use a Stop/Slow paddle meeting the requirements of the MUTCD for controlling traffic. The Stop/Slow paddles shall have a shaft length of seven (7) feet minimum. In addition to the Stop/Slow paddle, a flagger may use a 24 inches square red/orange flag as an additional device to attract attention. For night work, the vest shall have reflectorized stripes on front and back.

D. Pilot vehicles shall be provided if specified in the Plans or Specifications and meet the requirements of the MUTCD.

E. Signs for flagger traffic control shall be placed in advance of the flagging operation in accordance with the MUTCD. In addition to the signs required by the MUTCD, signs at regular intervals, warning of the presence of the flagger shall be placed beyond the point where traffic can reasonably be expected to stop under the most severe conditions for that day's work.

150.08 ENFORCEMENT:

The safe passage of pedestrians and traffic through and around the temporary traffic control zone, while minimizing confusion and disruption to traffic flow, shall have priority over all other Contractor activities. Continued failure of the Contractor to comply with the requirements of Section 150 (TRAFFIC CONTROL) will result in non-refundable deductions of monies from the Contract as shown in this Subsection for non-performance of Work.

Failure of the Contractor to comply with this Specification shall be reason for the Engineer suspending all other work on the Project, except erosion control and traffic control, taking corrective action as specified in Subsection 105.15, and/or withholding payment of monies due the Contractor for any work on the Project until traffic control deficiencies are corrected. These other actions shall be in addition to the deductions for non-performance of traffic control.

SCHEDULE OF DEDUCTIONS FOR EACH CALENDAR DAY OF DEFICIENCIES OF TRAFFIC CONTROL INSTALLATION AND/OR MAINTENANCE		
ORIGINAL TOTAL CONTROL AMOUNT		
From More Than	To and Including	Daily Charge
$0	$100,000	$100
100,000	1,000,000	250
1,000,000	5,000,000	500
5,000,000	20,000,000	750
20,000,000	40,000,000	1,000
40,000,000	-----	1,500

150.09 MEASUREMENT:

A. TRAFFIC CONTROL: When listed as a pay item in the Proposal, payment will be made at the Lump Sum price bid, which will include all traffic control not paid for separately, and will be paid as follows:

When the first Construction Report is submitted, the Traffic Control Plan and WTCS is approved; a payment of 25 (twenty-five) percent of the Lump Sum price will be made. For each progress payment thereafter, the total of the Project percent complete shown on the last pay statement plus 25 (twenty-five) percent will be paid (less previous payments), not to exceed one hundred (100) percent and subject to normal retainage.

When no payment item for Traffic Control – Lump Sum is shown in the Proposal, all of the requirements of Section 150 and the Traffic Control Plan shall be in full force and effect. The cost of complying with these requirements will not be paid for separately, but shall be included in the overall bid submittal.

B. SIGNS: When shown as a pay item in the contract, interim special guide signs will be paid for as listed below. All other regulatory, warning, and guide signs, as required by the Contract, will be paid for under Traffic Control Lump Sum or included in the overall bid submitted.

1. Interim ground mounted or interim overhead special guide signs will be measured for payment by the square foot. This payment shall be full compensation for furnishing the signs, including supports as required, erecting, illuminating overhead signs, maintaining, removing, re-erecting, and final removal from the Project. Payment will be made only one time regardless of the number of moves required.

2. Remove and rest existing special guide signs, ground mount or overhead, complete, in place, will be measured for payment per each. Payment will be made only one time regardless of the number of moves required.

3. Modify special guide signs, ground mount or overhead, will be measured for payment by the square foot. The area measured shall include only that portion of the sign modified. Payment shall include materials, removal from posts or supports when necessary, and remounting as required.

C. CHANGEABLE MESSAGE SIGN, PORTABLE: Changeable Message Sign, Portable will be measured as specified in Section 632.

D. TRAFFIC SIGNAL INSTALLATION – TEMPORARY: Traffic Signal Installation – Temporary will be measured as specified in Section 647.

E. FLASHING BEACON ASSEMBLY: Flashing Beacon Assemblies will measured as specified in Section 647.

F. TEMPORARY, SAND LOADED ATTENUATOR MODULES: Each Sand Loaded Attenuator Module of the type specified includes all material components, hardware, incidentals, labor site preparation and maintenance. Each module will be measured for payment by the drum only once regardless of the number of locations installed. Modules to replace those damaged or destroyed by traffic impact will also be measured by the unit for payment. Upon completion of the project, the modules shall be removed and retained by the Contractor.

G. PORTABLE IMPACT ATTENUATORS: Each Portable Impact Attenuator will be measured by the unit which shall include all material components, hardware, incidentals, labor, site preparation, and maintenance, including spare parts recommended by the manufacture for repairing minor accident damage. Each unit will be measured only once regardless of the number of locations installed, moves required, or number of repairs necessary because of traffic damage. Upon completion of the project, the units shall be removed and retained by the Contractor.

H. PAVEMENT MARKINGS: Pavement markings will be measured as specified in Section 150.

150.10 PAYMENT:

When shown in the Schedule of Items in the Proposal, the following items will be paid for separately:

Item No. 150. Traffic Control……..……Lump Sum

Item No. 150. Traffic Control, Solid Traffic Stripe ____ Inch, (Color)……....per Linear Foot

Item No. 150. Traffic Control, Skip Traffic Stripe ____ Inch, (Color)……per Linear Foot

Item No. 150. Traffic Control, Solid Traffic Stripe, Thermoplastic ____ Inch, (Color)…...per Linear Foot

Item No. 150. Traffic Control, Skip Traffic Stripe, Thermoplastic ____ Inch, (Color)……per Linear Foot

Item No. 150. Traffic Control, Pavement Arrow with Raised Reflectors…….per Each

Item No. 150. Traffic Control, Raised Pavement Markers – All Types…..…….……per Each
Item No. 150. Interim Ground Mounted Special Guide Signs……...……..…per Square Foot

Item No. 150. Interim Overhead Special Guide Signs……...per Square Foot

Item No. 150. Remove & Reset Existing Special Guide Signs, Ground Mount, Complete in Place …….……...per Each

Item No. 150. Remove & Reset Existing Special Guide Signs, Overhead, Complete in Place……..……per Each

Item No. 150. Traffic Control, Temporary Sand Loaded Attenuator Modules……per Each

Item No. 150. Traffic Control, Portable Impact Attenuator…….……...per Each

Item No. 150. Traffic Control, Pavement Markers, Words and Symbols……...per Square Foot

Item No. 150. Traffic Control, Pavement Arrow (Painted) With Raised Reflectors….……..per Each

Item No. 150. Modify Special Guide Sign, Ground Mount……per Square Foot

Item No. 150. Modify Special Guide Sign, Overhead…….per Linear Foot

Item No. 632. Changeable Message Sign, Portable…….……per Each

Item No. 647. Traffic Signal Installation, Temp…….……..…….Lump Sum

Item No. 647. Flashing Beacon Assembly, Structure Mounted…….……..per Each

Item No. 647. Flashing Beacon Assembly, Cable Supported……..per Each

SECTION 702 – VINE, SHRUB AND TREE PLANTING

Section 702.1 GENERAL DESCRIPTION:

Retain as written and add the following:

"Pay Item No. 702-0001 if included in the contract is intended for use as miscellaneous landscaping which may or may not be required on the project as directed/requested by the Engineer. Use of this item will be only as specifically authorized by the Fulton County Public Works Department.

Every effort will be made to negotiate an acceptable price with the Contractor for installation of landscaping required. If Fulton County is unable to negotiate an agreeable price with the Contractor, Fulton County reserves the right to negotiate both price and warranties with specialty contractors for this purpose. The Contractor will then be required to include the work authorized, utilizing the authorized specialty subcontractor. A maximum allowance of 5% may be included for overhead purposes of the prime contractor above the negotiated specialty contractor agreement."

Section 702.5 PAYMENTS:

Retain as written and add the following:

"For payment purposes, negotiated prices will be converted to a percentage of Item No. 702-0001. Payment for this item will be only for amounts authorized by the Engineer. Final Payment may or may not equal 100% of the Lump Sum Price included in the Contract.
Payment will be made under:

Item No. 702-0001. Miscellaneous Landscaping…….……..Allowance

SECTION XI: APPENDICES

Appendix A – CONTRACTOR SAFETY AND HEALTH MANAGEMENT PROCESS

Appendix B – SPECIAL ASSURANCES FOR UTILITY CONTRACT WORK WITHIN PUBLIC RIGHT-OF-WAY

Appendix C - JOB SAFETY ANALYSIS WORKSHEET EXAMPLE AND INFORMATION

Appendix D – ARTICLE 1 – SAFETY

Appendix E – FACT FINDING GUIDE

APPENDIX A: CONTRACTOR SAFETY AND HEALTH MANAGEMENT PROCESS

SAFETY POLICY STATEMENT

(Revised 2/28/03)

It is the policy of Fulton County to establish a comprehensive accident and loss prevention process for all Capital Projects implemented by Fulton County or its agents.

The goals of this comprehensive accident and loss prevention process are as follows:

- To prevent personal injury, property damage, and injury to the public.
- To implement safety and loss prevention processes as critical elements in the complete design and build process.
- To establish a proactive safety and health process that complies with all laws, regulations, consensus standards, and good management practices.
- To have the Contractors partner with Fulton County in the implementation of a Safety and Loss Prevention Process and Owner Controlled Insurance Program to minimize loss potential and to minimize risk.

Fulton County requires safety, health and loss prevention requirements and expectations to be included in project design, in the invitation to bid, in bid award and project meetings, and in the post job evaluations. The Contractor is required to develop and submit a project safety and health program for acceptance by Fulton County prior to Notice to Proceed. The Contractor is required to implement these requirements, and develop a management system to ensure compliance following the safety and health process outlined in this document and the bid documents.

The Contractor and other entities placed under contract with Fulton County will be obligated to implement, adhere to and enforce this Policy. The safety and health of the Contractor's employees, Sub-Contractors, and the public are the sole responsibility of the Contractor. The County may use and direct designated Representatives to implement and enforce this policy. **Failure of the Contractor to comply with this policy or any Safety related obligations may be grounds for contract termination.**

Safety Professionals, Fulton County's designated Representative and Insurance Carrier will periodically inspect all Fulton County construction projects to identify safety hazards and make recommendations to resolve the issues. Contractor will be responsible for abating the identified issues in a timely manner, and submitting written description of corrective action within 48 hours to Fulton County designated Representatives. Failure to bring timely resolution to the issues may result in work stoppage at Contractor's expense.

Prior to commencing work under this contract, Contractor's Project Manager and Project Superintendent shall attend a Pre-Construction Meeting and Safety Pre-Planning meeting to address insurance and safety issues/requirements.

CONTRACTOR SAFETY AND HEALTH MANAGEMENT PROCESS

NOT USED

2.0 REFERENCES

1.1 Occupational Safety and Health Regulations (OSHA) 29CFR1910 and 29CFR1926
1.2 Environmental Protection Agency Regulations (EPA) 40CFR
1.3 Fulton County Safety and Health and Requirements
1.4 Georgia Department of Transportation Regulations and Requirements
1.5 US Department of Transportation Requirements

1.6 Manual of Uniform Traffic Control Devices for Streets and Highways (ANSI D6.1)
1.7 Georgia Department of Natural Resources Environmental Protection Division Regulations
Safety rules and regulations will be followed using federal, state or local regulations in force. Should a Contractor's rule be in use which is more effective, the most stringent rule or regulation will be enforced by the Contractor, Sub-Contractor's and Fulton County designated Safety Representative(s).

3.0 RESPONSIBILITY

The Contractor receiving the bid has the ultimate responsibility for the safety and health of all Sub-Contractors, all employees on the project, and the general public and complying with all governmental regulations and requirements (OSHA, EPA, DOT, state, local). Nothing contained herein shall relieve the Contractor or any Sub-Contractor of such responsibility or liability.

4.0 PROCEDURE

4.1 The Contractor and each Sub-Contractor must implement a written safety and health prevention process and program following the guidelines contained in this document and in any other relevant portion of the Contract Documents. This program must be accepted by Fulton County or its Representatives prior to Notice to Proceed.

4.2 The Contractor and each Sub-Contractor must implement a drug and alcohol policy following the guidelines contained in this document and in the bid specific actions. This program must be accepted by Fulton County or its Representatives prior to Notice to Proceed.

4.3 The Contractor must designate a person responsible for site safety. Each Sub-Contractor must designate a person responsible for site safety.

4.4 Not Used.

4.5 Contractor is responsible for providing all necessary safety supplies and personal protective equipment required to protect its employees, Sub-Contractors, and the general public.

4.6 Contractor shall make available certified First-aid services, First-aid supplies, and provisions for medical care for all employees at the construction site prior to beginning work on site.

4.7 Contractor shall maintain a competent person at the construction site at all times with an OSHA 10-hour certification. Said person shall have the knowledge to recognize hazards or potential hazards and has the authority to correct such hazards.

4.8 The status of project safety shall be included in the Contractor's agenda, which is required in Progress Meetings.

5.0 DRUG AND ALCOHOL POLICY

The Contractor and each Sub-Contractor must implement a drug and alcohol policy in order to maintain a safe and efficient work environment. This policy must include the following elements.

1. Written policy that prohibits the use, transportation, sale and possession of these materials.
2. Disciplinary action plan for violations
3. Any treatment or reinstatement/reemployment options
4. Drug and alcohol testing schedule that includes pre-employment, periodic for safety sensitive or critical jobs, and for cause

Note: AGC, ABC and/or Fulton County programs may be used as guidance documents.

6.0 OTHER CONTROLLED ITEMS

The Contractor and each Sub-Contractor is required to include in the Project Safety Program a prohibition against the use, possession, concealment, transportation, promotion or sale of the following controlled items

1. Firearms, weapons, and ammunition.
2. Switchblades
3. Unauthorized explosives including fireworks
4. Stolen property or contraband
5. Controlled chemicals or chemicals recognized as being able to be used for improper purposes.

7.0 EMERGENCY PROCEDURES/GUIDELINES

7.1 The Contractor is required to establish site specific emergency procedures in the Project Safety Program to manage emergencies that may occur at any time in the following categories:

1. Fire
2. Employee injury
3. Pedestrian injury due to work activity of any kind
4. Property damage and damage to various utilities (i.e., electrical, gas, sewerage, water, telephone or public roadways)
5. Public demonstrations
6. Bomb threats
7. Flood, Wind, Lightening, Hail
8. Terrorists Threats
9. Work place violence

7.2 These Emergency Procedures will be made part of the Contractor's Project Safety Program submittal and shall include but not be limited to the following elements:

1. A list of emergency phone numbers posted at the job site, along with information to be transmitted in such emergencies.
2. An incident command structure defining duties and responsibilities
3. A system to train supervisors and employees on this emergency plan
4. Procedures on how to handle emergencies including access to the site by emergency responders, accounting for workers, and securing the area.
5. Procedures for media releases. These releases must be coordinated through the Fulton County Information and Public Affairs Office in coordination with the County's designated Representative.
6. A plan that addresses serious incidents that includes notification to Fulton County, Fulton County's designated Representative and the Insurance Carrier immediately after the incident.
7. A review and updating frequency that includes forwarding a copy to Fulton County and the County's designated Representative.

8.0 ACCIDENT AND INCIDENT INVESTIGATION AND REPORTING

8.1 The Contractor is responsible for reporting all accidents and incidents on the project site to the County's designated Representative within (1) business day. Accidents or incidents resulting in a fatality, property loss in excess of $5,000, or involvement with the general public must be reported immediately to Fulton County's designated Representative and the investigation of the accident or incident coordinated with Fulton County Safety staff and Insurance Carrier.

8.2 The Contractor will maintain a log of all injuries that occur on the job site. This log will be current and available for review.

8.3 For any incidents such as fires, explosions, fatalities, etc., the Contractor must notify Fulton County's designated Representative immediately and must coordinate any releases to the news media through the County's designated Representative and the County's Information and Public

Affairs Office.

8.4 If a work-related injury should occur on this project, Contractor shall perform a thorough investigation of the incident and document the information on a worker's compensation 1st Report of Injury. This report shall be submitted to the Insurance Carrier within 24 hours of the incident.

8.5 A written accident investigation report containing the following information as a minimum must be forwarded to the Fulton County's designated Representative within 24 hours of incident.

1. Company Name
2. Location
3. Date and Time of incident
4. Description of incident
5. Names of all parties involved and all witnesses
6. Corrective action(s) taken to prevent recurrence
7. If the incident involves injury or illness, the following information must be provided:
   a) A medical description of the injury or illness
   b) OSHA recordability status i.e. first aid, medical treatment, lost time, days of restricted work.
   c) If the public is involved, information about treatment and treatment location.
8. Any pictures, site drawings, etc. if they assist in describing the incident.

If the investigation cannot be completed in 24 hours, a preliminary report marked as such shall be forwarded and the report completed and forwarded as soon as possible.

9.0 JOB SAFETY ANALYSIS

9.1 The Contractor and each Sub-Contractor must implement a procedure to conduct a written job safety analysis or job hazard analysis for all project work tasks prior to beginning each task. Reference Appendix D.

9.2 The job safety analysis should follow National Safety Council, AGC, or other recognized guidelines and address all safety and health hazards for the work, identify personal protective and other safety equipment required, identify potential hazards to the general public if applicable, and identify any safety equipment, training, or controls that must be implemented prior to starting the work.

9.3 The Contractor must maintain a file for all job safety analysis forms, which is accessible for review.

10.0 SAFETY AND HEALTH COMPLIANCE AUDITING

10.1 Self Auditing Requirements

10.1.1 The Contractor and each Sub-Contractor must implement a procedure to assure that written safety and health audits or inspections are conducted at least biweekly (every 2 weeks). Safety checklists used by Fulton County's designated Representative may be used. The Contractor may use this checklist or an equivalent approved by Fulton County's designated Representative.

10.1.2 Each written safety audit must be filed on the site and a copy forwarded to Fulton County designated Representative. This audit will be routed to Fulton County's Insurance Carrier for review and comment and then filed in the Construction Project files.

10.2 NOT USED

10.3 INSPECTIONS BY REGULATORY AGENCIES

10.3.1 The Contractor must notify the Fulton County designated Representative whenever an OSHA compliance officer, health inspector, or EPA or Georgia Environmental Protection Division Representative arrives at the project site to conduct an inspection.

10.3.2 The Contractor is required to forward a copy of all regulatory citations, notice of violations, or similar for this project to Fulton County's designated Representative. Copies must be forwarded to the Insurance Carrier.

10.3.3 These records will be reviewed with Fulton County designated Representative and included in the Construction Project files.

10.4 SAFETY INSPECTION AND AUDIT FOLLOW UP

10.4.1 Every safety audit or regulatory inspection conducted per the requirements above may be reviewed by the Fulton County designated Representative and/or Insurance Carrier loss control staff. This review may identify serious and repeat safety items, look at trends, identify risks and potential losses, and site safety and loss prevention activities.

10.4.2 After this review the findings may identify areas needing improvement.

10.4.3 A copy of the audit and any areas identified, as needing improvement will be forwarded to the Contractor's senior management.

10.4.4 For findings that indicate major loss potential or serious concerns about site safety, the areas identified as needing improvement and the overall performance may be reviewed in a meeting with Fulton County's designated Representative, and the Insurance Carrier loss control staff. A written action plan to address the Contractor's performance issues may be developed.

10.4.5 Fulton County or designated Representative may meet the Contractor's senior management to discuss the findings, contract requirements, and their plans to address the findings.

10.4.6 The number and frequency of safety audits and site visits may be increased until improvements are noted.

11.0 SAFETY MEETINGS

11.1 The Contractor will conduct weekly safety meetings with all Contractor and Sub-Contractor employees on the site.

11.2 The Contractor will keep safety-meeting records that include meeting topic(s), outline of items discussed, and attendance and sign in sheet. At this meeting any accidents or audit findings and corrective actions from the previous week will be discussed.

11.3 The Contractor will maintain a job site file that contains copies of the safety meeting records.

12.0 TRAINING, INSPECTION AND CERTIFICATION

12.1 Employee Training

12.1.1 The Contractor must be able to show when requested the required safety training for all Contractor and Sub-Contractor employees and competent **persons** working on the site including any required craft training.

12.1.2 The Contractor must be able to show when requested that all employees operating mobile equipment or cranes have met or exceeded training and licensing requirements.

12.1.3 The Contractor must be able to show when requested that all scaffolds are erected under the direction of a competent scaffold builder, that all users are properly trained, and that the scaffold is inspected daily.

12.1.4 The Contractor shall ensure that each employee is properly trained in the recognition and avoidance of unsafe conditions and the regulations applicable to his or her work environment to control or eliminate any hazards or other exposure to

illness or injury.

12.1.5 If Contractor or Sub-Contractor employs anyone who cannot effectively communicate using the English language, a translator must be maintained on site who can relay instructions, questions, or concerns in a manner that the non-English and English-speaking employees will understand. The identification of this translator shall be provided to Fulton County's designated Representative.

12.1.6 Contractor shall orient all supervision and employees concerning safety requirements before working on the project site.

12.2 Equipment Certification and Inspection

12.2.1 The Contractor must be able to document that all cranes and mobile equipment used on the job site have current inspections and certifications.

12.2.2 The Contractor must assure that required daily and weekly equipment inspections are performed and documented in writing per governmental regulations and the requirements of this policy.

12.2.3 The Contractor must maintain a job site file for these required inspections and certifications.

12.2.4 Equipment identified as having safety problems or not meeting standards or codes shall be tagged as defective and shall not be used until those identified items have been corrected.

12.2.5 Contractor shall maintain, and have available for viewing, safety inspection reports for ladder, electrical cords, scaffolds, and trenches/excavations.

13.0 SAFETY AND HEALTH PROGRAM ELEMENTS

Note: Based on the project work activities and scope of work, some program elements may be not applicable to the project work and therefore do not have to be implemented. Elements marked with an asterisk are applicable to all Projects.

13.1 Return to Work Policy*

The Contractor and each Sub-Contractor will be required to establish a transitional work program for employees injured at work, which provides modified duty within the employee's physical limitations.

13.2 Fire Prevention Program*

The Contractor and each Sub-Contractor will be required to submit a temporary fire protection plan to be in effect for the duration of the contract. This plan must be submitted as part of the Contractor's Safety Program submittal. It must include provisions for fire protection systems and equipment, as identified in OSHA Safety and Health for Construction 1926, Sub-Part F, Fire Protection and Prevention.

13.3 Hazard Communication (HAZCOM)*

The Contractor and each Sub-Contractor shall have a written HAZCOM Program. The program shall meet OSHA 1926 Requirements and provide for training so that all employees will be able to:

- Understand the program and identify hazardous chemicals with which they work.
- Understand product-warning labels.
- Have MSDSs for all potentially hazardous materials brought onto, used on, or stored at the job site.
- Know the physical location of the Material Safety Data Sheets (MSDS).

13.4 Personal Protective Equipment(PPE)*

All Contractor and Sub-Contractor employees and other site visitors will be required to wear the PPE necessary to accomplish the work in a safe manner. PPE required will vary from job to job and must be based on a written hazard assessment. A list of PPE that is required is identified below:

- Hard Hats shall be worn at all times on all projects
- Hearing Protection for operations that create noise in excess of 85 dBA is required.
- Contractor shall provide eye or face protection equipment when machines or operations present potential eye or face injury from physical, chemical, or radiation agents.
- Work boots or work shoes made of leather shall be required. No open toed shoes or canvas shoes are allowed
- Shirts with sleeves at least 4 inches long are required. Tank tops and mesh shirt are not allowed.
- Full Body Safety Harnesses with shock absorbing lanyards for fall protection are required.
- Full body and chemical splash protection is required when handling hazardous chemicals.
- Respirators are required when employees maybe exposed to dust and/or chemicals in excess of the OSHA permissible exposure limits.
- Long pants are required.

13.5 Confined Space Entry

If the project work involves permit required confined spaces, a permit required confined space entry program that meets OSHA requirements must be established. This program must include but is not limited to the following elements.

- Confined Space Identification
- Environmental Testing
- Rescue
- Communication with employees in the confined space
- Employee Training
- Permit System for entry

13.6 Excavations

If the Contractor or Sub-Contractor must make a cut, cavity, trench or depression in an earth surface formed by earth removal, the work must comply with the OSHA Regulations on trenching and excavations. A competent person must be assigned for each excavation. Requirements include but are not limited to

- Employee Training
- Daily inspections
- Soil testing
- Protective or support systems.

13.7 Electrical Tools, Equipment, and Systems*

- The Contractor and each Sub-Contractor must implement Assured Grounding Program or use Ground Fault Circuit Interrupter (GFCI) devices on all electrical tools and extension cords.
- All electrical work must be performed in accordance with the National Electrical Code (NEC) and OSHA.
- All electrical tools and extension cords must be in good repair and the Contractor must establish a written inspection program for all electrical tools. The frequency of inspection shall be at least monthly.

13.8 Lockout/Tagout Procedure

The Contractor and each Sub-Contractor will be required to implement a written Lockout/Tag procedure that meets OSHA requirements if their work requires energy isolation. Program elements include but are not limited to the following:

- Energy isolation lists for each piece of equipment
- Employee training
- Individually keyed locks and danger tags
- Written Procedure that assigns responsibilities

13.9 Fall Protection*

Contractor shall provide an approved fall protection system for all employees working at an elevation of 6 feet or higher on this project, including scaffolding work and steel erection. Employees will be responsible for utilizing the fall protection 100% of the time. Sub-Contractor will be responsible for ascertaining their employees' compliance with this requirement. The plan must address the following items:

- Only full body harnesses with shock absorbing lanyards and double locking hooks shall be use.
- Falls should be limited to less than 6 feet such than employee can neither fall more than 6 feet or contact any lower level.
- Fall protection systems must be planned into the job and must be designed to handle loads and forces expected. The project goal is 100% fall protection.
- Employee training and enforcement of these requirements are mandatory to assure an effective program.

13.10 Scaffolding*

All scaffolds and work platforms shall be constructed to meet the requirements of OSHA 1926.451 and ANSI A10.8. Some program elements include but are not limited to

- User training for all employees who may use scaffolds
- Scaffolding is to be designed and erected by competent person(s) following manufacturer's guidelines. Employees must use fall protection when erecting scaffolding.
- Daily inspection by competent person. Must implement daily tag system to document inspection.
- Must have engineering approval for scaffolds above 100 feet in height.
- Must be able to document competent person credentials.
- Scaffolds must have proper egress (ladder/stairs) and should have guardrails, complete deck, toe boards and netting if anything can fall on people below. If guardrails or decking is not complete, fall protection must be used.

13.11 Cranes And Other Lifting Devices

- Trained and experienced operators shall operate Cranes in accordance with the applicable OSHA and ANSI/ASME.
- The Contractor is responsible for ensuring that the crane is properly sized for the job and that all required inspections and maintenance required by OSHA and ANSI/ASME standards have been conducted.
- All cranes should have anti-two block devices installed and operational. Cranes lifting employees in personnel baskets must have an anti-two block device to stops the crane if this condition occurs (positive acting).
- Tag lines are required to secure materials while being moved or handled by cranes.

- All cranes working in the vicinity of overhead power lines shall be grounded and be equipped with proximity guards.
- A lift plan must be submitted for all lifts that exceed 20,000 pounds or 75% of the crane's lift capacity. This plan must be reviewed and approved by the Contractor.
- Slings, hooks, and other lifting devices must be inspected on regular basis and stored properly.

13.12 Use Of Personnel Baskets

- Personnel baskets should only be used as the last practical means after documenting that all other means are unacceptable.
- The personnel basket must be manufactured, tested, and used in accordance with OSHA 1926.550. The crane lifting the basket must also meet OSHA requirements.

13.13 Personal Lifts With Articulating Booms (Jlg) And Scissors Lifts

- Operators must be trained in the safe operation of the lift including daily inspection procedures prior to use.
- Operators of JLG lifts must wear a full body harness with shock absorbing lanyard and be tied off while the lift is operation. Operators in a scissors lift must use fall protection anytime the guardrail system removed or altered.

13.14 Ladders*

- Ladders are acceptable means of access when used in compliance with OSHA 1926.1053.
- Ladders must be in good repair, have safety feet and be inspected.
- Extension ladders must be either held by an employee on the ground or tied off at the top.
- Homemade ladders not meeting OSHA requirements should not be used.
- Non-conducting ladders are required for electrical work.
- Fall protection is encouraged for employees working on ladders especially if they will be leaning and turning in their work activities.

13.15 Tools And Equipment*

All tools and equipment used on the project must be in a safe operating condition, with all guards in place, and must meet or exceed all governmental regulations (OSHA, EPA, DOT, etc.). Tools and equipment must be maintained, inspected, tested, and used in accordance with OSHA regulations.

13.16 Compressed Gas Cylinders*

- Compressed gas cylinders must be used, stored, and transported in accordance with OSHA requirements, DOT requirements, and Compressed Gas Association standards.
- Fuel and oxygen cylinders must be store separately or separated by a ½ hour rated firewall.
- Compressed gas cylinders are not allowed inside confined spaces.

13.17 Welding, Burning, And Cutting*

- The Contractor's program must meet or exceed OSHA and NFPA requirements.
- All flammables must be removed from work area and a fire watch posted in area until 30 minutes after the job is completed.
- At a minimum a 10 LB ABC rated fire extinguisher must be available in the immediate work area.

- Regulators must be in good working order and must have anti-flash back and check valves.
- Welding shields and burning goggles must be used.

13.18 Sanitation And Housekeeping*

- The project site shall have an adequate number of portable toilets and hand washing facilities.
- The project site must establish a housekeeping plan that includes daily site clean up and trash and debris removal.

13.19 Hearing Conservation*

The Contractor and each Sub-Contractor who has employees exposed to noise levels exceeding 85 dBA must establish a hearing conservation program that meets or exceeds OSHA requirements. Minimum program elements include audiometric testing, noise monitoring, use of hearing protectors, and employee training.

13.20 Respiratory Protection

The Contractor and each Sub-Contractor who has employees who wear respiratory protection must implement a respiratory protection program that meets or exceeds OSHA requirements. Minimum program elements include risk based respirator selection, medical surveillance, employee training, respirator fit testing, and written operating procedures.

14.0 SPECIALIZED SAFETY PROGRAM ELEMENTS

If required by the project scope of work and specific work site or activities, specialized programs listed below shall be included in the Contractor's Safety Program submittal. The Contractor is required to implement the required programs and assure that they meet or exceed all contractual, regulatory and Fulton County's requirements applicable. Details for specific program elements may be included in the contract documents.

14.2 Asbestos Removal
14.3 Lead Based Paint Removal
14.4 Exposure Assessment and Employee Monitoring (Industrial Hygiene)
14.5 Hazardous Waste Operations and Training
14.6 Overhead Power Lines
14.7 Locating underground utilities
14.8 Dust Control
14.9 Guarding for floor holes and roof openings
14.10 Heavy Equipment, Truck and Earth Moving Equipment requirements
14.11 Environmental Requirements

15.0 ROAD AND TRANSPORTATION SAFETY REQUIREMENTS

The Contractor shall implement the following into its safety program whether required by the contract or any other authority having jurisdiction if required to perform the work and maintain vehicular and pedestrian traffic safety:

15.1 Barricades and Cones
15.2 Traffic and Warning Signs
15.3 Traffic control devices
15.4 Equipment and materials storage
15.5 Reflective Clothing and other personal protective equipment
15.6 Excavation and road hole protection
15.7 Erosion protection

15.8 Trained flaggers

16.0 ADDITIONAL REQUIREMENTS TO PROTECT THE GENERAL PUBLIC

Based on the Contractor's scope of work and specific work activities or location the Contractor may be required to implement the following into its safety program to protect the general public:

16.1 Fencing and other measures for site security
16.2 Warning, direction and no trespassing signs
16.3 Alternate public walk ways
16.4 Protection of the public from over head and other construction hazards
16.5 Site Traffic Control
16.6 Barricading off hazardous areas and open pits and holes

APPENDIX B: SPECIAL ASSURANCES FOR UTILITY CONTRACT WORK WITHIN PUBLIC RIGHT-OF-WAY

T243 REYNOLDS ROAD AT WESTLAKE PARKWAY INTERSECTION IMPROVEMENT

Contract Identification:_____

All work under this contract which is to be performed on public right-of-way under control of Fulton County or involves work which is subject to a permit issued by Fulton County or any other agency or department of government having jurisdiction shall be done in compliance with the terms and conditions of such permit and any applicable Fulton County standards and specifications, including its utility installation standards and specifications. Fulton County shall have the right to inspect the work and to require any action necessary to correct all deviations from said terms and conditions. Contractor agrees that Fulton County shall not be held liable for any extra expense or damages to the Contractor as a result of the requirement for compliance with applicable permits or standards or specifications or any corrective action which Fulton County may order in enforcement thereof. The same conditions shall apply to any work under this contract on public right-of-way under the control of the Georgia Department of Transportation.

_____
(Company)

_____
(Contractor's Authorized Representative)

_____
(Date)

APPENDIX C: ARTICLE 1 - SAFETY

(Revised 2/28/03)

10. OWNER-CONTRACTOR SAFETY, HEALTH AND LOSS PREVENTION PROGRAM

10.1.1 The Contractor shall be responsible for designing and implementing a comprehensive project-specific safety, health and loss prevention process and/or program and employee substance abuse program for this project. All Sub-Contractors must either implement their own program that meets these requirements or follow the Contractor's safety, health and loss prevention process and/or employee substance abuse program.

10.1.2 Safety, health and loss prevention process and/or employee substance abuse program must meet or exceed all governmental regulations (OSHA, EPA, DOT, State, local), comply and other specific Fulton County requirements, and with any other safety, health and loss prevention requirements detailed in the contract documents including the requirements of the Contractor Safety and Health Management Process which is attached hereto and incorporated herein.

10.1.3 Within ten (10) business days of receipt of the Notice of Award (NOA), the Contractor shall submit in writing to the County's designated Representative, the Contractor's written Safety, Health and Loss Prevention Process and/or Program and Employee Substance Abuse Program and those of Sub-Contractors that meet or exceed the requirements referenced in the contract documents. Included in this submittal will be the name and qualifications of the site safety representative.

Prior to issuing the Notice to Proceed (NTP), a meeting will be held with the Contractor and all Sub-Contractors to review the safety, health and loss prevention process and/or program requirements, submittals to be provided by the Contractor.

These program submittals must be reviewed and accepted by the County's designated Representative as meeting or exceeding safety, health, and loss prevention process and/or program requirements. A Notice To Proceed (NTP) with the work may not be issued until these submittals have been accepted.

10.2 DESIGNATION OF SAFETY REPRESENTATIVE

10.2.1 The Contractor will designate an employee by (name, phone number, pager number) as Site Safety Representative. This employee will have sufficient training and knowledge of safety and health principles, regulations, and procedures to report to the Contractor's Project Manager and/or Superintendent. Sub-Contractors must also designate a similar employee responsible for safety and health. The Sub-Contractor's safety designee will coordinate safety activities with the general contractor's safety designee.

For projects with significant risk or hazard potential or for any project for which the Contractor and its Sub-Contractors of any tier have 50 total employees or greater on site, Contractor must designate a qualified employee to be the full time Site Safety Representative. This person should address safety, health and loss prevention activities for the complete project including Sub-Contractors.

10.3 FULTON COUNTY'S SAFETY, HEALTH, AND LOSS PREVENTION PROCESS GUIDELINES AND REQUIREMENTS

10.3.1 The County and its agents reserve the right, but assume no duty, to establish and enforce safety, health, and loss prevention guidelines and to make the appropriate changes in the guidelines, for the protection of persons and property and to review the efficiency of all protective measures taken by the Contractor. The Contractor shall comply with all safety, health, and loss prevention process guidelines and requirements and changes made by the County or its agent(s). The issuance of any

such guidelines or changes by the County or its agent(s) shall not relieve the Contractor of its duties and responsibilities under this Agreement, and the County or its agent(s) shall not thereby assume, nor be deemed to have assumed, any such duties or responsibilities of the Contractor.

10.4 COMPLIANCE OF WORK, EQUIPMENT, AND PROCEDURES WITH ALL APPLICABLE LAWS and REGULATIONS

10.4.1 All Work, whether performed by the Contractor or its Sub-Contractors of any tier, or anyone directly or indirectly employed by any of them, and all equipment, appliances, machinery, materials, tools and like items incorporated or used in the Work, shall be in compliance with and conform to:

(a) All applicable laws, ordinances, rules, regulations and orders of any public, quasi-public or other governmental authority relating to the safety of persons and their protection against injury, specifically including, but in no event limited to, the Federal Occupational Safety and Health Act of 1970, as amended, and all rules and regulations now or hereafter in effect pursuant to said Act.

(b) All rules, regulations, and requirements of the County or its agent(s) and its insurance carriers relating there to. In the event of a conflict or differing requirements the more stringent shall govern.

10.5 PROTECTION OF THE WORK

10.5.1 The Contractor shall, throughout the performance of the Work, maintain adequate and continuous protection of all Work and temporary facilities against loss or damage from whatever cause, shall protect the property of the County and third parties from loss or damage from whatever cause arising out of the performance of the Work, and shall comply with the requirements of the County or its agent(s) and its insurance carriers, and with all applicable laws, codes, rules and regulations, (as same may be amended) with respect to the prevention of loss or damage to property as a result of fire or other hazards.

10.5.2 The County or its agent(s) may, but shall not be required to, make periodic inspections of the Project work area. In such event, however, the Contractor shall not be relieved of its aforesaid responsibilities and the County or its agent(s) shall not assume, nor shall it be deemed to have assumed, any responsibility otherwise imposed upon the assurance of Contractor by this Agreement.

10.6 SAFETY EQUIPMENT

10.6.1 The Contractor shall provide to each worker on the Project work area the proper safety equipment for the duties being performed by that worker and will not permit any worker on the Project work area who fails or refuses to use the same. The County or its agent shall have the right, but not the obligation, to order the removal of a worker from the Project work site for his/her failure to comply with safe practices or substance abuse policies, and the Contractor shall promptly comply with the Safety Program or Substance Abuse Program and all such orders.

10.7 EMERGENCIES

10.7.1 In any emergency affecting the safety of persons or property, or in the event of a claimed violation of any federal or state safety or health law or regulation, arising out of or in any way connected with the Work or its performance, the Contractor shall act immediately to prevent threatened damage, injury or loss and to remedy said violation. Failing such action the County or its agent(s) may immediately take whatever steps it deems necessary including, but not limited to, suspending the Work as provided in this Agreement.

10.7.2 The County or its agent(s) may offset any and all costs or expenses of whatever nature, including attorneys' fees, paid or incurred by the County or its agent(s) (whether such fees are for in-house

counsel or counsel retained by the County or its agent), in taking the steps authorized by Section 10.7.1 above against any sums then or thereafter due to the Contractor. The Contractor shall defend, indemnify and hold the County, its officers, agents, employees and the O.C.I.P. Administrator harmless against any and all costs or expenses pursuant to Section 10.7.1, by whomsoever incurred. If the Contractor shall be entitled to any additional compensation or extension of time change order on account of emergency work not due to the fault or neglect of the Contractor or its Sub-Contractors, such additional compensation or extension of time shall be determined in accordance with Section 8 and Section 12 of this Agreement.

10.8 SUSPENSION OF THE WORK

10.8.1 Should, in the judgment of the County or its agent(s), the Contractor or any Sub-Contractor fail to provide a safe and healthy work place or fail to follow the safety requirements defined in the contract documents and approvals, the County or its agent shall have the right, but not the obligation, to suspend work in the unsafe areas until deficiencies are corrected. All costs of any nature (including, without limitation, overtime pay, liquidated damages or other costs arising out of delays) resulting from the suspension, by whomsoever incurred, shall be borne by the Contractor.

10.8.2 Should the Contractor or any Sub-Contractor fail to provide a safe and healthy work place or fail to follow the safety requirements defined in the contract documents and approvals after being formally notified in writing by the County or its agents of such non-compliance, the contract may be terminated following the termination provision of the contract.

10.9 CONTRACTOR'S INDEMNITY OF THE COUNTY FOR CONTRACTOR'S NON-COMPLIANCE WITH SAFETY PROGRAM

10.9.1 The Contractor recognizes that it has sole responsibility to assure its Safety Program is implemented and to assure its construction services are safely provided. The Contractor shall indemnify, defend and hold the County and its agents harmless, from and against any and all liability (whether public or private), penalties (contractual or otherwise), losses, damages, costs, attorneys' fees, expenses, causes of action, claims or judgments resulting, either in whole or in part, from any failure of the Contractor, it suppliers, its agents, its servants, its Sub-Contractors of any tier or anyone directly or indirectly employed by any of them or for whose acts any of them may be liable, to comply with the safety requirements of the contract. The Contractor shall not be relieved of its responsibilities under the safety requirements of the Contract should the County or its agent(s) act or fail to act pursuant to its rights hereunder. The County, its agents, and the O.C.I.P. Administrator shall not assume, nor be deemed to have assumed, any responsibilities otherwise imposed upon the Contractor by this Agreement, by virtue of providing the Safety Program Guidelines.

10.9.2 The Contractor shall not raise as a defense to its obligation to indemnify under this Subparagraph 10.9 any failure of those indemnified hereunder to assure Contractor operates safely, it being understood and agreed that no such failure shall relieve the Contractor from its obligation to assure safe operations or from its obligation to so indemnify. The Contractor also hereby waives any rights it may have to seek contribution, either directly or indirectly, from those indemnified hereunder.

10.9.3 In any and all claims against those indemnified hereunder by any employee of the Contractor, any Sub-Contractor of any tier or anyone directly or indirectly employed by any of them or anyone for whose acts any of them may be liable, the indemnification obligation under this Subparagraph 10.9 shall not be limited in any way as to the amount or type of damages, compensation or benefits payable by or for the Contractor or any Sub-Contractor of any tier under any workers' compensation act, disability benefit or other employee benefit acts.

APPENDIX D: JOB SAFETY ANALYSIS WORKSHEET EXAMPLE AND INFORMATION

Job Safety Analysis/ Job Pre-Planning Worksheet

Job Name and #:		**Completed By:**	
Date:		**Phase/Operation:**	
Task	**Hazard**		**Control**

APPENDIX E: FACT FINDING GUIDE - GL

I. Evaluate present conditions at job site to determine items that could lead to liability claims during work and after completion of the project.

A. PRESENT OCCUPANCY OR USE OF THE SITE

- Demolition to be done?
- Structures will remain (condition)?

B. HISTORY OF THE SITE

- For what was the site used before?
- Underground tanks?
- Underground utilities?

C. GEOLOGY OF THE SITE

- Rock to be blasted?
- Water to be removed/diverted?
- Fill needed? (where and how obtained?)
- Excavation needed? (where and how disposed of?)

II. Evaluate controls needed in reference to site security and public protection.

A. FENCING NEEDED?

B. ACCESS/GATES

- Can traffic be routed past office or checkpoint?
- "Non-Vendor" visitors escorted?
- Gate lockable after hours?
- "Hard Hat" signs at entrance?
- Dirt removal/tarping area at exit?
- Ready Mix chute wash area?

C. PEDESTRIANS

- Sidewalk maintained outside fence?
- Covered sidewalk needed?
- Special access requirements for neighboring occupants?
- Special after-hours considerations?

D. ENVIRONMENTAL

- Dust control?
- Silt control?
- Mud control on streets?
- Vibration control?

E. UTILITIES

- Underground utilities located?
- Overhead power lines in work area relocated, removed, or deenergized?
- Temporary power service away from high traffic areas?

F. SUB-CONTRACTORS

- Method to secure proof of adequate insurance coverage in place?
- List of hazardous materials obtained?
- List of hazardous materials provided?
- Responsibilities established
- Job site safety meetings
- Materials delivery
- Debris removal
- Access to site
- Weekly Sub-Contractors' meetings
- Schedule of safety inspections
- Emergency Procedures

G. MATERIALS HANDLING

- Crane selection criteria established
- Maximum weight to be handled
- Maximum lifting height
- Maximum horizontal reach needed
- Amount of travel needed
- Swing radius available
- Set-up area available
- Ground bearing capacity
- Approximate frequency of lifts
- Crane operations responsibilities established
- Triangle or leasing company crane to be used?
- Operator trained and experienced on specific machine?
- Operator can accurately read and interpret machine load chart?
- Critical lift identified (75% of net capacity)?
- Machine fully inspected by a qualified outside agency?
- Rigging hardware properly selected?
- Inspecting and maintaining the crane per owner/manufacturer specifications?

III. Start Up.

A. ELECTRICAL

- Temporary Power
- Underground service possible?
- Maintenance responsibilities established?
- Main circuit panel barricaded?
- Lighting planned?
- Circuit Protection
- Ground fault circuit interrupt protection?
- Assured grounding conductor program?
- Responsibilities established?

B. FIRE PROTECTION

- ABC extinguishers adequately distributed?
- Properly sized?
- Maintenance of fire extinguishers?
- Stand pipe/hydrant available? Adequate?

- Housekeeping checks/inspections?

C. FALL PROTECTION

- Critical Job Phases Identified?
- Critical exposures identified by phase? (e.g. "Worker falls into basement excavation")
- Scheduled start dates for critical phases?
- General Fall Protection Procedures
- Perimeters
- Floor openings
- Working deck
- Work area access
- Ladders
- Elevator hatchways

D. PERSONAL PROTECTIVE EQUIPMENT

- General
- Hard hats
- Work shoes
- Specific by Task

E. HAZARD COMMUNICATION PROGRAM ESTABLISHED AND EMPLOYEES TRAINED

F. CONFINED SPACE ENTRY

- Procedures established and task(s) identified requiring use of procedures?

G. TRENCHING

- Procedures established and task(s) requiring procedures identified?

H. PHASE PRE-PLANNING

- Job schedules established?
- Agreed upon target dates for meeting?
- Follow up system

FINAL AFFIDAVIT

TO FULTON COUNTY, GEORGIA

I, _____, hereby certify that all suppliers of materials, equipment and service, subcontractors, mechanics, and laborers employed by _____, or any of his subcontractors in connection with the **T243 REYNOLDS ROAD AT WESTLAKE PARKWAY INTERSECTION IMPROVEMENT** in Fulton County, have been paid and satisfied in full as of _____, 200__, and that there are no outstanding obligations or claims of any kind for the payment of which Fulton County on the above named project might be liable, or subject to, in any lawful proceeding at law or in equity.

Signature _____
Title _____

ATTEST

Personally appeared before me this _____ day of _____, 200__.

_____, who under oath, deposes and says that he is _____ _____of the firm of _____, that he has read the above statement and that to the best of his knowledge and belief same is an exact true statement.

_____
Notary Public

My Commission Expires:_____

(seal)