FULTON COUNTY

Vision

People *Families* *Neighborhoods*

Mission

To serve, protect and govern in concert with local municipalities

Values

People
Ethics
Innovation
Customer Services
Resource Management
Equal Opportunity

INVITATION TO BID 13ITB87339K-LW

Fulton County Juvenile Court Building Entrance Security Renovation

For

Facilities & Transportation Services Department

BID DUE DATE AND TIME: April 11, 2013 at 11:00 A.M.
BID ISSUANCE DATE: March 8, 2013
PRE-BID CONFERENCE DATE: March 25, 2013 at 10:00 A.M.
PURCHASING CONTACT: Linda Walton
E-MAIL: Linda.Walton@fultoncountyga.gov

LOCATION: FULTON COUNTY DEPARTMENT OF PURCHASING & CONTRACT COMPLIANCE
130 PEACHTREE STREET, S.W., SUITE 1168
ATLANTA, GA 30303

Table of Contents

Section	Title
Division	**Bidding and Contract Requirements**
00020	**Invitation to Bid**

Description of Project
Permits
Rights of Way/Easements
Bid Documents
Subcontracting Opportunities
Term of Contract
No Contact Provision
Bid Contact
Basis of Award
Pre-Bid Conference

00100 **Instructions to Bidders**

A. Contract Documents
B. Bid Preparation and Execution
C. Addenda and Interpretations
D. Site Examination
E. Bidder's Modification and Withdrawal of Bids
F. Bid and Contract Security
G. Right to Reject Bids
H. Applicable Laws
I. Examination of Contract Documents
J. Indemnification and Hold Harmless Agreement
K. Bid Opening
L. Determination of Successful Bidder
M. Georgia Utility Contractors License
N. General Contractors License
O. Professional Licenses
P. Wage Clause
Q. Notice of Award of Contract
R. Execution of Contract Documents
S. Joint Venture
T. Contractors Compliance with Procurement
U. Georgia Security and Immigration Compliance Act
V. Bid General Requirements

Required Bid Submittal Checklist for ITB

00300 **Bid Form**

00310 **Bid Form Alternate**

00410 **Bid Bond**

00420 **Purchasing Forms & Instructions**

Form A - Non-Collusion Affidavit of Prime Bidder/Offeror
Form B - Certificate of Acceptance of Request for Bid Requirements
Form C - Professional License Certifications
Form C2 – Georgia General Contractors License

Form C3 – Georgia Professional License
Form D - Certification Regarding Debarment
Form E - Disclosure Form & Questionnaire
Form F – Georgia Security and Immigration Contractor Affidavit and Agreement
Form G – Georgia Security and Immigration Subcontractor Affidavit

00430 Contract Compliance Requirements

Non-Discrimination in Contracting and Procurement
Required Forms and EBO Plan
Exhibit A – Promise of Non-Discrimination
Exhibit B – Employment Report
Exhibit C – Schedule of Intended Subcontractor Utilization
Exhibit D – Letter of Intent to Perform As a Subcontractor or Provide Materials or Services
Exhibit E – Declaration Regarding Subcontracting Practices
Exhibit F – Joint Venture Disclosure Affidavit
Exhibit G – Prime Contractor/Subcontractor Utilization Report
Exhibit H - First Source Jobs Program Agreement
Equal Business Opportunity Plan (EBO Plan)

00490 Insurance and Risk Management Provisions

00500 Contractual Agreement

00610 Performance Bond Requirements

00620 Payment Bond Requirements

00700 General Conditions

00800 Special Conditions

DIVISION 1 – GENERAL REQUIREMENTS

01010 Summary of Work
01200 Project Meetings
01320 Schedule of Values
01320a References
01320b Cutting and Patching
01320c Abbreviations
01326 Construction Schedules
01330 Submittals
01520 Temporary Facilities
01710 Selective Demolition
01720 F. C. Design Standards
01720a General Requirements

DIVISION 2 – SITEWORK

02111 Building Demolition
02630 Portland Cement Concrete Sidewalks

DIVISION 3 – CONCRETE

03300 Cast-In-Place Concrete

DIVISION 4 – WOOD AND PLASTICS
06100 Rough Carpentry
06200 Finish Carpentry

DIVISION 5 – THERMAL AND MOISTURE PROTECTION
07840 Firestopping
07900 Caulking and Sealants

DIVISION 6 – DOORS AND WINDOWS
08110 Steel Doors and Frames
08219 Flush Wood Doors
08311 Access Doors
08410 Storefront Frame
08470 Revolving Entrance Doors
08510 Steel Windows
08520 Aluminum Windows
08710 Door Hardware

DIVISION 7 – FINISHES
09250 Gypsum Board
09511 Acoustical Panel Ceilings
09620 Resilient Linoleum Flooring
09680 Carpet
09912 Interior Painting

DIVISION 8 – SPECIALTIES
10431 Signage
10454 Turnstiles/Gates
10505 Metal Lockers
10510 Pistol Lockers

DIVISION 9 – EQUIPMENT
11910 Metal Detectors

DIVISION 10- MECHANICAL
15000 Mechanical General Requirements
15762 Cabinet Unit Heaters
15820 Duct Accessories
15855 Diffusers, Registers, and Grilles
15990 Testing, Adjusting, and Balancing

DIVISION 11 – ELECTRICAL
16060 Grounding and Bonding
16073 Hangers and Supports for Electrical Systems
16075 Electrical Identification
16091 Sleeves and Sleeve Seals for Electrical Raceways and Cabling
16092 Sleeves and Sleeve Seals for Communications Pathways and Cabling
16120 Conductors and Cables.Doc
16130 Raceways and Boxes
16140 Wiring Devices
16145 Lighting Control Devices
16410 Enclosed Switches and Circuit Breakers
16442 Panel boards

EXHIBIT

Exhibit 1: Architectural Drawings

A-0.0 Title Page
A-1.1 Existing Floor Plan
A-1.2 Proposed Floor Plan
A-1.3 Demolition Plan
A-1.4 Entry Plan
A-1.5 Proposed Room Finish Plan
A-2.1 Storefront Section
A-2.2 Miscellaneous Details
A-2.3 Desk Plan Details
A-3.1 Room Finish/Door Schedules
A-3.2 Window Schedule

Exhibit 2: Mechanical Electrical Drawings

M-1.0 Existing Mechanical Floor Plan
M-1.1 Proposed Floor Plan
E-0.1 Lay-In Fluorescent Fixture Detail
E-1.0 Existing Power Plan
E-1.1 Proposed Power Plan
E-2.0 Existing and Proposed Lighting Plan

INVITATION TO BID

FULTON COUNTY JUVENILE COURT BUILDING ENTRANCE SECURITY RENOVATION

Sealed Bids for furnishing all materials, labor, tools, equipment and appurtenances necessary for the construction of Fulton County Juvenile Court Building Entrance Security Renovation will be received by the Fulton County Department of Purchasing and Contract Compliance at 130 Peachtree Street, S.W. Suite 1168 Atlanta, GA 30303, until **11:00 a.m.**, local time, on **Thursday, April 11, 2013** and then at said office publicly opened and read aloud.

Description of Project:

The construction project will consist of the renovation of the main lobby entrance area at the Juvenile Justice Center located at 395 Pryor St. Atlanta, GA 30312. The Project consists of, but not limited to, the following major elements: Exterior- Repair canopy roofing at the main entrance to the building; demolish and replace concrete entry walkway as indicated. First Floor- Replace existing flooring and carpet; replace existing sliding doors with revolving doors; add new ballistic windows; add electrical outlets and circuits; add a new partition wall and bench; add new mechanical equipment; add new security cameras; add new electrical wiring and equipment; add new millwork; add new magnetic scanner; add new signage; replace storefront window; remove, relocate, replace, and add doors as indicated on drawings.

Permits:

The Contractor will be responsible for all federal, state and local permits required for the project.

Rights of Way/Easements:

There are no anticipated rights-of-way or easements required for the project.

Bid Documents:

The Instructions to Bidders, Bid and Contract Requirements (Bid Form, Bid Bond, Performance Bond, Payment Bond, Contract Agreement), and other bid Documents can be downloaded from the Fulton County Website, http://www.fultoncountyga.gov. under "Bid Opportunities". Drawings and/or Specifications may be obtained at the following location:

Action Blueprint
2705 Monroe Drive
Atlanta, GA 30324
(404) 885-1433
Web Site: action@actiondis.com

The cost for a set of drawings and specifications is **$82.82**. (includes taxes and pick up from the office) The non-refundable payment must be made to **Action Blueprint.**

For payment information, contact **Action Blueprint** by email, phone or in person. All other questions should be addressed by the procedures outlined in this ITB to Linda Walton, Assistant Purchasing Agent, Fulton County Department of Purchasing and Contract Compliance at 130 Peachtree Street, S.W. Suite 1168, Atlanta, GA 30303 or Linda.Walton@fultoncountyga.gov.

Subcontracting Opportunities:

Potential prime contractors submitting a bid on this project for Fulton County and are seeking subcontractors and/or suppliers can advertise those subcontracting opportunities on the County's website, http://www.fultoncountyga.gov under "Subcontracting Bid Opportunities".

Term of Contract:

The Bidder agrees hereby to commence work under this Contract, with adequate personnel and equipment, on a date to be specified in a written order of the Contracting Officer and to fully complete all work under this Contract within **120** consecutive calendar days from and including said date.

The County will make payments, within **45** days, in response to the Contractor's monthly Applications for Payment, which are accompanied by the Engineer's Certificate for Payment, for work performed to date plus cost of stored materials, less retainage. Payments, Applications for Payment, Certificates for Payment, and retainage shall be in accordance with the provisions of the Contract Documents.

No Contact Provision

It is the policy of Fulton County that the evaluation and award process for County contracts shall be free from both actual and perceived impropriety, and that contacts between potential vendors and County officials, elected officials and staff regarding pending awards of County contracts shall be prohibited.

A. No person, firm, or business entity, however situated or composed, obtaining a copy of or responding to this solicitation, shall initiate or continue any verbal or written communication regarding this solicitation with any County officer, elected official, employee, or designated County representative, between the date of the issuance of this solicitation and the date of the County Manager's recommendation to the Board of Commissioners for award of the subject contract, except as may otherwise be specifically authorized and permitted by the terms and conditions of this solicitation.

B. All verbal and written communications initiated by such person, firm, or entity regarding this solicitation, if same are authorized and permitted by the terms and conditions of this solicitation, shall be directed to the Purchasing Agent.

C. Any violation of this prohibition of the initiation or continuation of verbal or written communications with County officers, elected officials, employees, or designated County representatives shall result in a written finding by the Purchasing Agent that the submitted Bid or proposal of the person, firm, or entity in violation is "non-responsive", and same shall not be considered for award.

Bid Contact

Information regarding the bid or bid requirements, either procedural or technical, may be obtained by submitting questions in writing to:

Fulton County Department of Purchasing and Contract Compliance
Attn: Linda Walton, Assistant Purchasing Agent
Fulton County Public Safety Building
130 Peachtree Street, S.W. Suite 1168
Atlanta, GA 30303
Reference Bid # 13ITB87339K-LW

Or email questions and inquiries to Linda.Walton@fultoncountyga.gov

Basis of Award

The Contract, if awarded, will be awarded to the lowest responsive and responsible bidder. No bid may be withdrawn for a period of sixty (60) days after the date of bid opening except as permitted by O.C.G.A., §36-91-41 et seq., as amended. Each Bid must be accompanied by a Bid Bond in accordance with the Bid Bond Requirements provided in the Contract Documents, on a Surety Company's Standard Bid Bond Form acceptable to the County in an amount no less than 5% of the amount bid. The successful bidder will be required to furnish a Performance Bond and Payment Bond, **on or before** the issuance of Notice to Proceed, each in the amount of 100% of the Contract Amount. All other required Contract Documents must be fully completed and executed by the Contractor and his/her Surety, and submitted to the Owner **on or before** the issuance of the Notice to Proceed.

Pre-Bid Conference

Date:	**Monday, March 25, 2013**
Time:	**10:00 A.M.**
Location:	Juvenile Justice Center (Cell phones and other electronic devices are prohibited) 395 Pryor Street, Room 1132 Atlanta, GA 30312

There will be a mandatory Site Visit immediately following the Pre-Bid Conference.

Inquiries regarding the solicitation either technical or otherwise may be submitted in writing prior to the Pre-bid Conference and will be addressed at the Pre-bid Conference. Any additional questions asked at the pre-bid conference must be submitted in written form at the pre-bid conference and will be responded to in the form of an addendum with the County's official responses.

The Pre-bid conference will be conducted for the purpose of explaining the County's bid process, the specifications/technical documents, and to provide non-binding verbal responses to questions concerning these bid specifications and to discuss issues from the bidders perspective. However, no verbal response provided at the pre-bid conference binds the County. Only those responses to written questions that are responded to by the County in written communications will be authoritative.

END OF SECTION

INSTRUCTIONS TO BIDDERS

A. Contract Documents

The Contract Documents include the Contract Agreement, Contractor's Bid (including all documentation accompanying the Bid and any post-Bid documentation required by the County prior to the Notice of Award), Bonds, all Special Conditions, General Conditions, Supplementary Conditions, Specifications, Drawings and addenda, together with written amendments, change orders, field orders and the Construction Manager's written interpretations and clarifications issued in accordance with the General Conditions on or after the date of the Contract Agreement.

Shop drawing submittals reviewed in accordance with the General Conditions, geotechnical investigations and soils report and drawings of physical conditions in or relating to existing surface structures at or contiguous to the site are not Contract Documents.

The Contract Documents shall define and describe the complete work to which they relate.

B. Bid Preparation and Execution

All Bids must be made on the Bid forms contained herein. The original signed Bid with three (3) copies shall be submitted in a sealed envelope, addressed to the Department of Purchasing and Contract Compliance, Fulton County Public Safety Building, 130 Peachtree Street, S.W., Suite 1168 Atlanta, Georgia 30303, and labeled "Bid for ITB-**Fulton County Juvenile Court Building Entrance Security Renovation.**

REQUIRED SUBMITTALS: The bidder **must complete and execute** the following:

1. Bid Form
2. Bid Alternate Form
3. Acknowledgement of each Addendum
4. Bid Bond
5. Purchasing Forms (See Submittal Check List at end of this Section), fully executed
6. Contract Compliance Forms (See Submittal Check List at end of this Section), fully executed
7. Risk Management Insurance Provisions Form

Any bids received after the stated time and date will not be considered. It shall be the sole responsibility of the bidder to have his/her bid delivered to the Fulton County Department of Purchasing and Contract Compliance for receipt on or before the stated time and date (see Section 00020). If a bid is sent by U.S. Mail, the bidder shall be responsible for its timely delivery to the Purchasing Department. Bids delayed by mail will not be considered, shall not be opened, and arrangements shall be made for their return at the bidder's request and expense.

Bid shall be publicly opened, with only the names and total bid price of the bidders disclosed at the opening.

C. Addenda and Interpretations

No interpretations of the meaning of the Drawings, Specifications or other pre-bid documents will be made to any Bidder orally.

Bidders requiring clarification or interpretation of the Contract Documents shall make a request in writing, either by mail, hand delivery, e-mail or fax, to the Purchasing Agent at the address below. To be given consideration, requests must be received no later than

2:00, p.m. Tuesday, April 2, 2013. The County will not respond to any written requests received after this date. Telephone inquiries will not be accepted.

Fulton County Department of Purchasing and Contract Compliance
Attn: Linda Walton, Assistant Purchasing Agent
Fulton County Public Safety Building
130 Peachtree Street, S.W., 1168
Atlanta, GA 30303
Fax: (404) 335-5029
Linda.Walton@fultoncountyga.gov
Reference Bid # 13ITB87339K-LW

Only communications from firms that are in writing and signed will be recognized by the County as duly authorized expressions on behalf of proposers/bidders. Any and all such interpretations and any supplemental instructions will be in the form of written Addenda to the Contract Documents which, if issued, will be posted on Fulton County website, under "Bid Opportunities" prior to the date fixed for the opening of Bids.

Failure of Bidders to receive or acknowledge any Addendum shall not relieve them of any obligation under the Bid. All Addenda shall become part of the Contract Documents.

D. Site Examination

There will be a **mandatory** Site Visit immediately following the Pre-Bid Conference held at the Judge Romae T. Powell Juvenile Justice Center located at 395 Pryor St., Room 1132, Atlanta, GA 30312.

E. Bidder's Modification and Withdrawal of Bids

A Bidder may modify or withdraw its bid by written request, provided that the request is received by the County prior to the bid due date and time at the address to which bids are to be submitted. Provided further, that in case of an electronic request (i.e. facsimile, e-mail, etc.) a written confirmation thereof over the authorized signature of the Bidder must be received by the County at the address to which original Bids are to be submitted within three (3) calendar days after issue of the electronic message. Following withdrawal of its bid, the Bidder may submit a new bid, providing delivery is affected prior to the established bid opening date and time. **No bid may be withdrawn after bid due date for sixty (60) calendar days.**

F. Bid and Contract Security

A Bid Bond for an amount equal to five percent (5%) of the bid amount must accompany each Proposal. The bid bond shall be submitted in a separate, sealed envelope marked "Bid Bond".

Bids must be accompanied by a bid bond or certified check in an amount of five percent (5%) of the TOTAL AMOUNT of the base bid. The bid bond or certified check shall apply ONLY TO THIS BID. The bid name and contract number must appear on the security instrument. The bond must remain in full force and effect until the Bidder executes the final Contract. Bids not satisfying the bonding requirements of this project will be declared non-responsive.

Any bid bond, performance bond, payment bond, or security deposit required for public works construction contract shall be approved and filed with purchasing agent. At the option of the County, if the surety named in the bond is other than a surety company authorized by law to do business in this state pursuant to a current certificate of authority to transact surety business by the Commissioner of Insurance, such bond shall not be

approved and filed unless such surety is on the United States Department of Treasury's list of approved bond sureties.

A Purchasing Agent shall approve as to form and as to the solvency of the surety any bid bond, performance bond, or payment bond required by this. In the case of a bid bond, such approval shall be obtained prior to acceptance of the bid or proposal. In the case of payment bonds and performance bonds, such approval shall be obtained prior to the execution of the contract.

Whenever, in the judgment of the County:
(1) Any surety on a bid, performance, or payment bond has become insolvent;
(2) Any corporation surety is not longer certified or approved by the Commissioner of Insurance to do business in the state; or
(3) For any cause there are no longer proper or sufficient sureties on any or all the bonds

The County may require the contractor to strengthen any or all of the bonds or to furnish a new or additional bond or bonds within ten days. Thereupon, if so ordered by the County, all work on the contract shall cease unless such new or additional bond or bonds are furnished. If such bond or bonds are not furnished within such time, the County may terminate the contract and complete the same as the agent of and at the expense of the contractor and his or her sureties.

As a condition of responsiveness the bidder must contain a Bid Bond for an amount equal to 5% of the bid amount. The Bid Bond shall be included in a separate envelope marked on the outside "Bid Bond". Checks or letters of credit of any type will not be accepted. A certified cashier's check will be acceptable. Provide a completed and fully executed Bid Bond. When the bidder's package is opened, a purchasing agent will verify the presence of the Bid Bond and remove it from the Proposal Package.

If the bidder withdraws its bid from the competition after the selection of its bid for a reason not authorized by Georgia law, the County will proceed on the Bid Bond, along with any other available remedies.

The Surety of the Bid Bond shall be from a surety company authorized to do business in the State of Georgia, shall be listed in the Department of Treasury Circular 570, and shall have an underwriting limitation in excess of 100% of the bid amount. The Bonds and Surety shall be subject to approval by the County Attorney.

Attorneys-in-fact for bidders who sign bid bonds or contract bonds must file with each bond a certified and effectively dated copy of their power of attorney.

G. Right to Reject Bids

The County reserves the right to reject any or all bids and to waive informalities. No bids will be received after the time set for opening bids. Any unauthorized conditions, limitations or provisions attached to the Bid, except as provided herein, will render it informal and may cause its rejection. Unbalanced bids will be subject to rejection. Any bidder may withdraw his/her bid, either personally or by telegraphic or written request, at any time prior to the scheduled closing time for receipt of bids. Telegraphic or written requests for withdrawal must be in the possession of the County prior to the closing time for receipt of bids.

H. Applicable Laws

All applicable laws and regulations of the State of Georgia and ordinances and regulations of Fulton County shall apply. Protestors shall seek resolution of their complaints in the manner provided in the Fulton County Code of Laws §2-324, which is incorporated by reference herein.

I. Examination of Contract Documents

Prospective bidders shall examine the contract documents and before submitting a bid, shall make a written request to the County for an interpretation or correction of any ambiguity, in consistency or error therein which could be discovered by a bidder. At the bid opening each bidder shall be presumed to have read and be familiar with the contract documents.

J. Indemnification and Hold Harmless Agreement

See Section 00490, Insurance and Risk Management Provisions page 3, Indemnification and Hold Harmless Agreement

K. Bid Opening

Bids will be opened in public and read aloud. All bidders are requested to be present at the opening.

L. Determination of Successful Bidder

Fulton County desires to complete this work in a timely manner. The Contract will be awarded to the lowest responsive, responsible bidder(s), if awarded.

1. **Responsibility:** The determination of the bidder's responsibility will be made by the County based on whether the bidder meets the following minimum requirements:

    a. The County reserves the right to reject any bid if the evidence submitted by, or investigation of, the bidder fails to satisfy the County that he/she is properly qualified to carry out the obligations of the Contract.
    b. Maintains a permanent place of business individually or in conjunction with the prime contractor.
    c. Has the appropriate and adequate technical experience. Designated Project Manager must be proficient in all aspects of contracted work.
    d. Has adequate personnel and equipment to do the work expeditiously.
    e. Has suitable financial means to meet obligations incidental to the work.

2. **Responsiveness:** The determination of responsiveness will be made by the County based on a consideration of whether the bidder has submitted a complete Bid form without irregularities, excisions, special conditions, or alternative bids for any item unless specifically requested in the Bid form.

M. Georgia Utility Contractors License (NON-APPLICABLE)

N. General Contractors License (APPLICABLE)

Effective July 1, 2008, all general contractors are required to be licensed by the State of Georgia to perform the following work; construction; construction management services; or design-build services as a prime contractor, joint venture partner, or as a subcontractor to a design professional acting as prime contractor as part of a design-build entity or combination, unless exempted from holding such license pursuant to Georgia law (O.C.G.A. 43-41-17). If exempted, Contractor must submit a copy of their Georgia Department of Transportation Certificate of Qualification with their bid submittal.

Bidders must complete Form C2: Georgia General Contractors License Certification in Section 6, Purchasing Forms. Failure to provide the required license shall deem your bid non-responsive.

O. Professional Licenses (APPLICABLE)

The State of Georgia requires that the following professions are required by state law to be licensed:

1. Electricians
2. Plumbers
3. Conditioned Air Contractors
4. Low voltage Contractors

Bidders and any sub-contractors performing any of the above described work must provide a copy of their license for the work they will perform on this project. Bidders must complete Form C3: Georgia Professional License Certification in Section 6, Purchasing Forms Failure to provide the required license may deem your bid non-responsive.

P. Wage Clause

Pursuant to 102-391, Each Contractor shall agree that in the performance of the Contract he will comply with all lawful agreements, if any, which the Contractor had made with any association, union, or other entity, with respect to wages, salaries, and working conditions, so as not to cause inconvenience, picketing, or work stoppage.

Q. Notice of Award of Contract

As soon as possible, and within sixty (60) days after receipt of bids, the County shall notify the successful Bidder of the Award of Contract.

The award shall be made by the Board of Commissioners of Fulton County to the lowest responsive, responsible bidder(s) as soon as possible after receipt of bids, taking into consideration price and the responsiveness to the requirements set forth in the Invitation for Bid. In such case, no claim shall be made by the selected Contractor(s) for loss of profit if the contract is not awarded or awarded for less work than is indicated and for less than the amount of his bid. The total of the awarded contract shall not exceed the available funds allocated for this project.

Should the County require additional time to award the contract, the time may be extended by mutual agreement between the County and the successful bidder. If an Award of Contract has not been made within sixty (60) days from the bid date or within the extension mutually agreed upon, the Bidder may withdraw the Bid without further liability on the part of either party.

Any award made by the Board of Commissioners as a result of this bid will begin from the date of the notice to proceed. The Bidder agrees hereby to commence work under this Contract, with adequate personnel and equipment, on a date to be specified in a written order from the user department. The contract shall become effective on the Contract Date and shall continue in effect until the end of the term of the contract or until the project has been closed-out unless earlier terminated pursuant to the termination provisions of the contract.

R. Execution of Contract Documents

Upon notification of Award of Contract, the County shall furnish the Contractor the conformed copies of Contract Documents for execution by the Contractor and Contractor's surety.

Within ten (10) days after receipt the Contractor shall return all the documents properly executed by the Contractor and the Contractor's surety. Attached to each document shall be an original power-of-attorney for the person executing the bonds for the surety and certificates of insurance for the required insurance coverage.

After receipt of the documents executed by the Contractor and his surety with the power-of-attorney and certificates of insurance, the County shall complete the execution of the documents. Distribution of the completed documents will be made upon completion.

Should the contractor and/or surety fail to execute the documents within the time specified, the County shall have the right to proceed on the Bid Bond accompanying the bid.

If the County fails to execute the documents within the time limit specified, the Contractor shall have the right to withdraw the Contractor's bid without penalty.

Should an extension of any of the time limits stated above be required, this shall be done only by mutual agreement between both parties.

Any agreement or contract resulting from the acceptance of a bid shall be on a County approved document form. The County reserves the right to reject any agreement that does not conform to the Invitation for Bid and any County requirements for agreements and contracts. The County reserves the right to modify the agreement resulting from this bid upon the recommendation of the County Attorney.

S. Joint Venture

Any Bidder intending to respond to this solicitation as a joint venture must submit an executed joint venture agreement with its offer. The agreement must designate those persons or entities authorized to execute documents or otherwise bind the joint venture in all transactions with Fulton County, or be accompanied by a document, binding upon the joint venture and its constituent members, making such designation. Offers from joint ventures that do not include these documents will be rejected as being non-responsive.

T. Contractors Compliance with All Assurances and/or Promises Made In Response To Procurement

Should any Bidder submit a response to the County promising to provide a certain level of service for either the scope of work, MFBE participation, or any other matter, including where such promise or assurance is greater than what is required by the procurement documents, and should this response containing the promise or assurance be accepted by the County and made a part of the Contract Documents, then this degree or level of service promised by the bidder relating to the scope of work, MFBE participation, or other matter shall be considered to be a material part of the Agreement between the bidder and the County, such that the bidder's failure to provide the agreed upon degree or level of service or participation shall be a material breach of the Agreement giving the County just cause to terminate the Agreement for cause, pursuant to the General Conditions of the Agreement.

U. Georgia Security and Immigration Compliance Act

This Invitation to Bid is subject to the Georgia Security & Immigration Compliance Act. Pursuant to the Georgia Security & Immigration Compliance Act of 2006, as amended on May 11, 2009, bidders and proposers are notified that all bids/proposals for services that are to be physically performed within the State of Georgia must be accompanied by proof of their registration with and continuing and future participation in the E-Verify program established by the United States Department of Homeland Security. A completed affidavit must be submitted on the top of the bid/proposal at the time of submission, prior

to the time for opening bids/proposals. Under state law, the County cannot consider any bid/proposal which does not include a completed affidavit. It is not the intent of this notice to provide detailed information or legal advice concerning the Georgia Security & Immigration Compliance Act. All bidders/proposers intending to do business with the County are responsible for independently apprising themselves and complying with the requirements of that law and its effect on County procurements and their participation in those procurements. For additional information on the E-Verify program or to enroll in the program, go to: https://e-verify.uscis.gov/enroll.

See Section 00420, Purchasing Forms & Instructions for declarations and affidavits.

V. Bid General Requirements

The following information pertains to the submission of a Bid to Fulton County, and contains instructions on how Bids must be presented in order to be considered. Listed below are the requirements for all Bidders interested in doing business with Fulton County.

1. The Bid sheets included in this Invitation to Bid ("Bid") must be fully completed and returned with the Bid unless otherwise specified in writing by the Purchasing Department. Type or neatly print the date, company name, and the full legal name and title of the person(s) signing the Bid in the place provided at the bottom of each Bid sheet. Any additional sheets submitted must contain the same signature and Bidder information.

2. All signatures must be executed by person(s) having contracting authority for the Bidder.

3. Absolutely no fax Bids or reproduction Bids will be accepted, except that photocopies may be submitted in addition to the original when multiple copies of the Bid are specifically requested in the solicitation.

4. The envelope in which the Bid response is submitted must be sealed and clearly labeled with the Bid number, project title, due date and time, and the name of the company or individual submitting the proposal. Bids must be received by the opening date and time shown on this Bid in order to be considered. The Purchasing Agent has no obligation to consider Bids which are not in properly marked envelopes. Contract Compliance submittals shall be submitted in a separate sealed envelope or package.

5. The original and the required number of copies of the Bid must be returned to:

   Fulton County Purchasing Agent
   Fulton County Department of Purchasing and Contract Compliance
   130 Peachtree Street, S.W., Suite 1168
   Atlanta, Georgia 30303

   Any inquiries, questions, clarifications or suggestions regarding this solicitation should be submitted in writing to the Purchasing Contact Person. Contact with any other County personnel in regard to a current solicitation is strictly prohibited in accordance with Fulton County "No Contact Provision" policy outlined in S35 and in Section 00020, Invitation to Bid.

6. Show information and prices in the format requested. Prices are to be quoted F.O.B. Destination, and must include all costs chargeable to the Contractor executing the Contract, including taxes. Unless otherwise provided in the Contract, Fulton County shall have no liability for any cost not included in the price. The Contractor shall

provide Fulton County the benefit through a reduction in price of any decrease in the Contractor's costs by reason of any tax exemption based upon Fulton County's status as a tax-exempt entity.

7. All prices Bid must be audited by the Bidder to ensure correctness before the Bid is submitted. The Bidder is solely responsible for the accuracy of information placed on a Bid sheet, including prices. Clerical or mathematical error is insufficient to void a successful Bid but a Bidder may withdraw a sealed Bid prior to opening without a penalty.

8. All prices must be submitted in the format requested and less all trade discounts. When multiple items are being Bid, Bidder must show both the unit price and the total extended price for each item. When applicable, the Bidder must include an additional lump sum Bid for groups or items. In the event a Bidder is offering an additional discount on groups of items, Bidder must indicate the total lump sum Bid for the particular group of items before any extra discount, the amount of extra discount, and the net total for the particular group. In the event of an extension error, unit pricing shall prevail.

9. By submitting a signed Bid, Bidder agrees to accept an award made as a result of that Bid under the terms and conditions spelled out in the Bid documents. In the event of a conflict between the different Bid documents, the County's cover Contract (if used) shall have precedence, followed in order by the Invitation to Bid, Purchase Order, Bid, Contractor's Warranty Agreement, Maintenance Agreement, and/or other Contractor provided agreements.

10. A Bidder may submit only one (1) Bid response for each specific Bid solicitation unless otherwise authorized in the specifications.

11. All prices submitted by the Bidder to Fulton County must be guaranteed by the authorized person(s) against any price increase for the time period designated in the Bid specifications, and Fulton County must be given the benefit of any price decrease occurring during such designated time period.

12. All items Bid must be new. Used, rebuilt and refurbished items will not be considered unless specifically authorized by Fulton County in the written specifications.

13. All Bidders must specify in the Bid response the earliest actual delivery date for each item unless otherwise specified in writing by Fulton County. The delivery date may be a factor in deciding the Bidder's capability to perform.

14. A successful Bidder's delivery ticket(s) and invoice(s) must list each item separately and must show Fulton County's purchase order number as well as the proper department and address to which delivery was made, as listed on the purchase order or in the Bidder's contract with Fulton County.

15. Unless clearly shown as "no substitute" or words to that effect, any items in this invitation to Bid which have been identified, described or referenced by a brand name or trade name are for reference only. Such identification is intended to be descriptive but not restrictive, and is to indicate the general quality and characteristics of products that may be offered. Each item Bid must be individually identified as to whether it is a specified item or an equivalent item by typing or printing after the item(s): The brand name; model or manufacturer's number, or identification regularly used in the trade. Deviations from the specifications must be clearly and fully listed on the Bid sheet, including photographs or cuts, specifications, and dimensions of the proposed "alternate". Fulton County is the sole judge of "exact equivalent", or "alternate". The

factors to be considered are: function, design, materials, construction, workmanship, finishes, operating features, overall quality, local service facilities, warranty terms and service, and other relevant features of item(s) Bid.

16. For all Bids, Fulton County reserves the right to request representative samples. If requested, samples must be delivered at the Bidder's cost within three (3) business days. Samples are submitted at the risk of the Bidder and may be subjected to destructive tests by Fulton County. Samples must be plainly tagged with Fulton County's Bid number, item name, manufacturer, and the name of the Bidder.

17. Item(s) Bid must be complete and ready to operate. No obvious omissions of components or necessary parts shall be made even though the specifications may not detail or mention them. Unit(s) must be furnished with factory installed equipment and must be comparable with the basic form, fit, and functional requirements which are all to be included in the base price as well as any other equipment included as standard by the manufacturer or generally provided to the buying public.

18. All successful Bidders must assume full responsibility for all item(s) damaged prior to F.O.B. Destination delivery and agree to hold harmless Fulton County of all responsibility for prosecuting damage claims.

19. All successful Bidders must assume full responsibility for replacement of all defective or damaged goods within thirty (30) days of notice by Fulton County of such defect or damage.

20. All successful Bidders must assume full responsibility for providing or ensuring warranty service on any and all items including goods, materials, or equipment provided to the County with warranty coverage. If a successful Bidder is not the manufacturer, all manufacturers' warranties must be passed through to Fulton County. The Bidder and not Fulton County is responsible for contacting the manufacturer of the warranty service provided during the warranty period and supervising the completion of the warranty service to the satisfaction of Fulton County.

21. As a successful Bidder providing any equipment which requires fitting and assembly, the Bidder shall be solely responsible for such installation being performed by a manufacturer's authorized or approved servicer or an experienced worker, utilizing workmanship of the highest caliber. The Bidder must verify all dimensions at the site, shall be responsible for their correctness, and shall be responsible for the availability of replacement parts when specified in writing by Fulton County in the specifications, purchase order, or other contract.

22. A successful Bidder is solely responsible for disposing of all wrappings, crating, and other disposable material upon deliver of item(s).

23. All Bidders are required to be authorized distributors or regularly engaged in the sale or distribution of the type of goods, materials, equipment or services for which the Bidder is submitting a Bid response in addition, all Bidders are required to provide Fulton County with three (3) written references documenting the successful completion of Bids or contracts for the types of items including goods, materials, equipment, or services for which the Bidder is submitting a Bid response. In instances where a Bidder has never supplied such goods, material, equipment, or services before, the Bidder must submit with the Bid response a statement and supporting documentation demonstrating such expertise, knowledge, or experience to establish the Bidder as a responsible Bidder, capable of meeting the Bid requirements should an award be made. No exceptions to this provision will be made unless authorized in the Bid specifications.

24. Bidders may be required to furnish evidence that they maintain permanent places of business of a type and nature compatible with their Bid proposal, and are in all respects competent and eligible vendors to fulfill the terms of the specifications. Fulton County may make such investigations as it deems necessary to determine the ability of the Bidder to perform such work, and reserves the right to reject any Bidder if evidence fails to indicate that the Bidder is qualified to carry out the obligation of the Contract and to complete the work satisfactorily.

25. All Bidders must comply with all Fulton County Purchasing laws, policies, and procedures, non-discrimination in contracting and procurement ordinances, and relevant state and federal laws including but not limited to compliance with EEOC hiring guidelines and requirements under the Americans with Disabilities Act. Successful Bidder must obtain all permits, licenses, and inspections as required and furnish all labor, materials, insurance, equipment, tools, supervision, and incidentals necessary to accomplish the work in these specifications.

26. If a successful Bidder is unable or unwilling to enter into a Contract with Fulton County subsequent to being granted an award, or who fails to perform in accordance with the Bid specifications the Bidder will be subject to damages and all other relief allowed by law.

27. Successful Bidders contract directly with Fulton County and are the party or parties obligated to perform. Contracts may not be assigned and any failure to perform the Contract in accordance with the specifications will constitute a breach of Contract and may result in a Bidder being found to be "non-responsive" in the future.

28. In case of default by the successful Bidder, Fulton County may procure the articles for services from another source and hold the successful Bidder responsible for any resulting excess cost.

29. The County may award any Bid in whole or in part to one or more vendors or reject all Bids and/or waive any technicalities if it is in the best interests of the County to do so. In the event that all Bids are not rejected, Bids for items including goods, materials, equipment, and services will be awarded to the lowest "responsible" Bidder(s) as determined by Fulton County. Submitting the lowest Bid, as published at the Bid opening, does not constitute an award or the mutual expectation of an award of a Contract and purchase order. For purposes of this notice and the attached Bid sheets, a purchase order is a Contract to provide items including goods, materials, equipment, and services and is intended to have the full force and effect of a Contract. A breach of the terms and conditions of a purchase order constitutes a breach of Contract.

30. Bids for projects that are solicited pursuant to the Georgia Local Government Public Works Construction Law (O.C.G.A. § 36-91-1 et seq.) may withdrawn as follows:

    Competitive sealed Bids ("Bid") may not be revoked or withdrawn until 60 days after the time set by the governmental entity for opening of Bids. At the end of this time period, the Bid will cease to be valid, unless the Bidder provides written notice to the County prior to the scheduled expiration date that the Bid will be extended for a time period specified by the County.

31. In the evaluation of the Bids, any award will be subject to the Bid being:

    a. Compliant to the specification – meets form, fit, and function requirements stated or implied in the specification.
    b. Lowest cost to the County over projected useful life.

c. Administratively Compliant – Including all required bonds, insurance, established quality of work and general reputation, financial responsibility, relevant experience, and related criteria.

32. All proposals and Bids submitted to Fulton County are subject to the Georgia "Open Records Act", Official Code of Georgia, Annotated (O.C.G.A.) §50-18-70 et seq.

33. All proposals and Bids submitted to Fulton County involving Utility Contracting are subject to the Georgia law governing licensing of Utility Contractors, O.C.G.A. §43-14-8.2(h). The Utility Contractor License number of the person who will perform the utility work shall be written on the face of the Bid envelope.

34. The apparent silence of this specification, and any supplement thereto, as to details, of the omission from it of a detailed description concerning any point, will be regarded as meaning only the best commercial practices are to prevail. Only materials of the highest quality, correct type, size, and design are to be used. All interpretations of this specification will be made upon the basis of this statement, with Fulton County interpretation to prevail.

35. It is the policy of Fulton County that the evaluation and award process for County contracts shall be free from both actual and perceived impropriety, and that contacts between potential vendors and County officials, elected officials and staff regarding pending awards of County contracts shall be prohibited.

    a. No person, firm, or business entity, however situated or composed, obtaining a copy of or responding to this solicitation, shall initiate or continue any verbal or written communication regarding this solicitation with any County officer, elected official, employee, or designated County representative, between the date of the issuance of this solicitation and the date of the County Manager's recommendation to the Board of Commissioners for award of the subject contract, except as may otherwise be specifically authorized and permitted by the terms and conditions of this solicitation.

    b. All verbal and written communications initiated by such person, firm, or entity regarding this solicitation, if same are authorized and permitted by the terms and conditions of this solicitation, shall be directed to the Purchasing Agent.

    c. Any violation of this prohibition of the initiation or continuation of verbal or written communications with County officers, elected officials, employees, or designated County representatives shall result in a written finding by the Purchasing Agent that the submitted Bid or proposal of the person, firm, or entity in violation is "non-responsive", and same shall not be considered for award.

36. Any Bidder intending to respond to this solicitation as a Joint Venture must submit an executed Joint Venture Agreement with this Bid. This agreement must designate those persons or entities authorized to execute documents or otherwise bind the Joint Venture in all transactions with Fulton County, or are accompanied by a document, binding upon the Joint Venture and its constituent members, making such designation. Bids from Joint Ventures that do not include these documents will be rejected as being "non-responsive".

37. Any Bidder intending to respond to this solicitation must complete all of the Procurement Affidavit Forms provided in this solicitation. Bids that do not include these completed documents will be rejected as being "non-responsive".

Required Bid Submittal Check List for Invitation to Bid (ITB)

The following submittals shall be completed and submitted with each bid (see table below "Required Bid Submittal Check List."). **Please check to make sure that the required submittals are in the envelope before it is sealed. Failure to submit all required submittals may deem your proposal non-responsive.**

Submit one (1) Original bid, signed and dated and three (3) **complete** copies of the Original Bid including all required documents.

Item #	Required Bid Submittal Check List	Check (√)
1	Bid Form (Section 00300) – All dollar amounts must be both in writing AND figures and represent prices for the published scope of work without exceptions.	
2	Bid Alternate Form (Section 00310)	
3	Acknowledgement of each Addendum (acknowledged both on the Bid Form, Section 00300, and on the form included with each addendum).	
4	Bid Bond (Section 00410) **(separate envelope)**	
5	Purchasing Forms (Section 00420) Form A - Non-Collusion Affidavit of Prime Bidder/Offeror Form B - Certificate of Acceptance of Request for Bid/Proposal Requirements" Form C2- Georgia General Contractors License Form C3- Georgia Professional Licenses Form D - Certificate Regarding Debarment Form E - Disclosure Form & Questionnaire Form F - Declaration of Employee-Number Categories Form G - Georgia Security and Immigration Contractor Affidavit and Agreement Form H - Georgia Security and Immigration Subcontractor Affidavit	
6	Office of Contract Compliance Requirements (Section 00430) **(separate envelope)** Exhibit A - Promise of Non-Discrimination (for Prime and each Sub) Exhibit B - Employment Record (for Prime and each Sub) Exhibit C - Schedule of Intended Subcontractor Utilization Exhibit D - Letter of Intent to Perform as Subcontractor Exhibit E - Declaration Regarding Subcontractor Practices Exhibit F - Joint Venture Disclosure Affidavit Exhibit G - Prime Contractor/Subcontractor Utilization Report Equal Business Opportunity Plan (EBO Plan)	
7	Risk Management Insurance Provisions Form (Section 00490) and proof of insurance, either a letter from insurer or Certificate of Insurance.	
8		
9		
10		

END OF SECTION

BID FORM

Submitted To: Fulton County Government

Submitted By: _____

For: **Fulton County Juvenile Justice Center Lobby Entrance Renovation**

Submitted on_____,2013.

The undersigned, as Bidder, hereby declares that the only person or persons interested in the Bid as principal or principals is or are named herein and that no other person than herein mentioned has any interest in this Bid or in the Contract to be entered into; that this Bid is made without connection with any other person, company or parties making a Bid; and that it is in all respects fair and in good faith without collusion or fraud.

The Bidder further declares that he has examined the site of the work and informed himself fully in regard to all conditions pertaining to the place where the work is to be done; that he has examined the Drawings and Specifications for the work and contractual documents relative thereto, and has read all instructions to Bidders and General Conditions furnished prior to the openings of bids; that he has satisfied himself relative to the work to be performed.

The Bidder proposes and agrees, if this Bid is accepted, to contract with the Board of Commissioners of Fulton County, Atlanta, Georgia, in the form of contact specified, to furnish all necessary materials, equipment, machinery, tools, apparatus, means of transportation and labor necessary, and to complete the construction of the work in full and complete accordance with the shown, noted, and reasonably intended requirements of the Specifications and Contract Documents to the full and entire satisfaction of the Board of Commissioners of Fulton County, Atlanta, Georgia, with a definite understanding that no money will be allowed for extra work except as set forth in the attached General Conditions and Contract Documents for the following prices.

THE BASE BID IS THE AMOUNT UPON WHICH THE BIDDER WILL BE FORMALLY EVALUATED AND WHICH WILL BE USED TO DETERMINE THE LOWEST RESPONSIBLE BIDDER.

The base bid may not be withdrawn or modified for a period of sixty (60) days following the receipt of bids.

BASE BID AMOUNT

$_____
(Dollar Amount In Numbers)

_____
(Dollar Amount in Words)

The Bidder agrees hereby to commence work under this Contract, with adequate personnel and equipment, on a date to be specified in a written order of the Contracting Officer and to fully complete all work under this Contract within **One Hundred and Twenty** (**120**) consecutive calendar days from and including said date.

The Bidder declares that he understands that the quantities shown for the unit prices items are subject to either increase or decrease, and that should the quantities of any of the items of work be increased, the Bidder proposes to do the additional work at the unit prices stated herein; and should the quantities be decreased, the Bidder also understands that payment will be made on the basis of actual quantities at the unit price bid and will make no claim for anticipated profits for any decrease in quantities; and that actual quantities will be determined upon completion of work, at which time adjustments will be made to the contract amount by direct increase or decrease.

The Bidder furthermore agrees that, in the case of a failure on his part to execute the Contract Agreement and Bonds within ten days after receipt of conformed contract documents for execution, the Bid Bond accompanying his bid and the monies payable thereon shall be paid into the funds of the Owner as liquidated damages for such failure.

Enclosed is a Bid Bond in the approved form, in the sum of:

_____Dollars

($_____) according to the conditions of "Instructions to Bidders" and provisions thereof.

The following form shall be used for submittal of Bid Prices:

COST PROPOSAL FORM

Item #	Component Description	Quantity	Unit Cost	Total Cost
1	Division 1: General Requirements			
2	Division 2: Site Work (Building Demolition & Portland Cement Concrete Sidewalk)			
3	Division 3: Concrete			
4	Division 4: Wood & Plastics			
5	Division 5: Thermal and Moisture Protections			
6	Division 6: Doors and Windows			
7	Division 7: Finishes			
8	Division 8: Specialties			
9	Division 9: Equipment			
10	Division 10: Mechanical			
11	Division 11: Electrical			
Sub Total				
12	**Base Bid Amount (Item 1 thru 11)**			**$**
Sub Total				
13	**County Controlled Contingency**			**$39,000**
Sub Total				
14	**TOTAL BASE BID AMOUNT**			**$**

The undersigned acknowledges receipt of the following addenda (list by the number and date appearing on each addendum) and thereby affirms that its Bid considers and incorporates any modifications to the originally issued Bidding Documents included therein.

ADDENDUM # _____ DATED _____

ADDENDUM # _____ DATED _____

ADDENDUM # _____ DATED _____

ADDENDUM # _____ DATED _____

BIDDER/VENDOR: _____

Signed by: _____
[Type or Print Name]

Title: _____

Business Address: _____

_____

County: _____

Business Phone: _____

Fax Number: _____

Business Email: _____

Bidder's Contractor License No: _____
[State/County]

License Expiration Date: _____

Note: If the Bidder is a corporation, the Bid shall be signed by an officer of the corporation; if a partnership, it shall be signed by a partner. If signed by others, authority for signature shall be attached.

The full name and addresses of persons or parties interested in the foregoing Bid, as principals, are as follows:

Name	Address

END OF SECTION

ALTERNATE BID FORM

Submitted To: Fulton County Government

Submitted By: _____

For: 13ITB873379K-LW, Juvenile Court Building Entrance Security Renovation

Submitted on_____, 2013.

The undersigned, as Bidder, hereby declares that the only person or persons interested in the Bid as principal or principals is or are named herein and that no other person than herein mentioned has any interest in this Bid or in the Contract to be entered into; that this Bid is made without connection with any other person, company or parties making a Bid; and that it is in all respects fair and in good faith without collusion or fraud.

The Bidder further declares that he has examined the site of the work and informed himself fully in regard to all conditions pertaining to the place where the work is to be done; that he has examined the Drawings and Specifications for the work and contractual documents relative thereto, and has read all instructions to Bidders and General Conditions furnished prior to the openings of bids; that he has satisfied himself relative to the work to be performed.

The Bidder proposes and agrees, if this Bid is accepted, to contract with the Board of Commissioners of Fulton County, Atlanta, Georgia, in the form of contact specified, to furnish all necessary materials, equipment, machinery, tools, apparatus, means of transportation and labor necessary, and to complete the construction of the work in full and complete accordance with the shown, noted, and reasonably intended requirements of the Specifications and Contract Documents to the full and entire satisfaction of the Board of Commissioners of Fulton County, Atlanta, Georgia, with a definite understanding that no money will be allowed for extra work except as set forth in the attached General Conditions and Contract Documents for the following prices.

The base bid may not be withdrawn or modified for a period of sixty (60) days following the receipt of bids.

ALTERNATE BID AMOUNT (To be added/deducted from the Bidder's BASE BID AMOUNT)

Alternate #1
Delete the Revolving Doors 03 and 04 and Leave Intact the existing sliding doors and surrounding storefront. (New doors 01, 02, 05 and 06 are to remain in the work.)

$_____
(Alternate #1 Dollar Amount In Numbers)

_____
(Alternate #1 Dollar Amount in Words)

Alternate #2
Include an Allowance of $1,500 for a bench to be placed in the Main Lobby.

$_____
(Alternate #2 Dollar Amount In Numbers)

_____
(Alternate #2 Dollar Amount in Words)

BIDDER: _____

Signed by: _____
Type or Print Name

Title: _____

Business Address: _____

_____

_____

Business Phone: _____

Bidder's Contractor License No: _____
State/County

License Expiration Date: _____

Note: If the Bidder is a corporation, the Bid shall be signed by an officer of the corporation; if a partnership, it shall be signed by a partner. If signed by others, authority for signature shall be attached.

The full name and addresses of persons or parties interested in the foregoing Bid, as principals, are as follows:

Name	**Address**

END OF SECTION

BID BOND

No bid for a contract in Fulton County for work to be done shall be valid for any purpose unless the Contractor shall give a Bid Bond with good and sufficient surety payable to, in favor of, and for the protection of Fulton County. The Bid Bond shall not be less than 5% of the total amount payable by the terms of the Contract. No bid shall be read aloud or considered if a proper bid bond has not been submitted.

Surety companies executing Bonds must appear on the Treasury Department's most current list (Circular 570 as amended) and be authorized to transact business in the State of Georgia.

Attestation for the corporation must be by the corporate officer; for a partnership by another partner; for an individual by a notary with the corporate seal.

BID BOND

13ITB87339K-LW Fulton County Juvenile Court Building Entrance Security Renovation

FULTON COUNTY GOVERNMENT

KNOW ALL MEN BY THESE PRESENTS, THAT WE_____

_____

hereinafter called the PRINCIPAL, and _____

_____

hereinafter call the SURETY, a corporation chartered and existing under the laws of the State of _____and duly authorized to transact Surety business in the State of Georgia, are held and firmly bound unto the Fulton County Government (COUNTY), in the penal sum of _____

_____Dollars and Cents ($_____) good and lawful money of the United States of America, to be paid upon demand of the COUNTY, to which payment well and truly to be made we bind ourselves, our heirs, executors, and administrators and assigns, jointly and severally and firmly by these presents.

WHEREAS the PRINCIPAL has submitted to the COUNTY, for **13ITB87339K-LW Fulton County Juvenile Court Building Entrance Security Renovation,** a Bid;

WHEREAS the PRINCIPAL desires to file this Bond in accordance with law:

NOW THEREFORE: The conditions of this obligation are such that if the Bid be accepted, the PRINCIPAL shall within ten (10) calendar days after receipt of written notification from the COUNTY of the award of the Contract execute the Contract in accordance with the Bid and upon the terms, conditions and prices set forth therein, in the form and manner required by the COUNTY, and execute sufficient and satisfactory Performance and Payments Bonds payable to the COUNTY, each in the amount of one hundred percent (100%) of the total contract price, in form and with security satisfactory to said COUNTY, then this obligation to be void; otherwise, to be and remain in full force and virtue in law; and the SURETY shall upon failure of the PRINCIPAL to comply with any or all of the foregoing requirements within the time specified above immediately pay to the COUNTY, upon demand the amount hereof in good and lawful money of the United States of America, not as a penalty, but as liquidated damages.

In the event suit is brought upon this Bond by the COUNTY and judgment is recovered, the SURETY shall pay all costs incurred by the COUNTY in such suit, including attorney's fees to be fixed by the Court.

Enclosed is a Bid Bond in the approved form, in the amount of _____

_____Dollars

($_____) being in the amount of five percent (5%) of the Contract Sum. The money payable on this bond shall be paid to the COUNTY, for the failure of the Bidder to execute a Contract within ten (10) days after receipt of the Contract and at the same time furnish a Payment Bond and Performance Bond.

(SIGNATURES ON NEXT PAGE)

IN TESTIMONY THEREOF, the PRINCIPAL and SURETY have caused these presents to be duly signed and sealed this _____day of _____,20__

ATTEST:

_____
PRINCIPAL

_____ BY_____

(SEAL)

CERTIFICATE AS TO CORPORATE PRINCIPAL

I, _____, certify that I am the Secretary of the Corporation named as principal in the within bond; that _____, who signed the said bond of said corporation; that I know this signature, and his/her signature thereto is genuine; and that said bond was duly signed, sealed and attested for in behalf of said Corporation by authority of its governing body.

_____
SECRETARY

(CORPORATE SEAL)

_____
SURETY

_____ BY_____
(SEAL)

END OF SECTION

PURCHASING FORMS & INSTRUCTIONS

This section contains the procurement forms that are required to be executed and submitted with the bid package. This section does not contain all forms required to be included with the bid package submittal.

To be deemed responsive to this ITB, Bidders must provide the information requested and complete in detail all Purchasing Forms. The appropriate individual(s) authorized to commit the Bidder to the Project must sign the Purchasing Forms. Bidders should reproduce each Purchasing Form, as required, and complete the appropriate portions of the forms provided in this section.

- Form A: Non-Collusion Affidavit of Prime Bidder/Offeror
- Form B: Certificate of Acceptance of Request for Bid/Proposal Requirements
- Form C: Professional License Certifications
  - Form C2 – Georgia General Contractors License
  - Form C3 – Georgia Professional License
- Form D: Certification Regarding Debarment
- Form E: Disclosure Form and Questionnaire
- Form F: Georgia Security and Immigration Contractor Affidavit and Agreement
- Form G: Georgia Security and Immigration Subcontractor Affidavit and Agreement

FORM A: NON-COLLUSION AFFIDAVIT OF BIDDER/OFFEROR

STATE OF GEORGIA

COUNTY OF FULTON

I, _____ certify that pursuant to Fulton County Code Section 2-320 (11), this bid or proposal is made without prior understanding, agreement or connection with any corporation, firm or person submitting a bid for the same work, labor or service to be done or the supplies, materials or equipment to be furnished and is in all respects fair and without collusion or fraud. I understand collusive bidding is a violation of state and federal law and can result in fines, prison sentences and civil damages awards. I agree to abide by all conditions of this bid or proposal and certify that I am authorized to sign this bid or proposal for the bidder.

Affiant further states that pursuant to O.C.G.A. Section 36-91-21 (d) and (e), _____ has not, by itself or with others, directly or indirectly, prevented or attempted to prevent competition in such bidding or proposals by any means whatsoever. Affiant further states that (s)he has not prevented or endeavored to prevent anyone from making a bid or offer on the project by any means whatever, nor has Affiant caused or induced another to withdraw a bid or offer for the work.

Affiant further states that the said offer of _____ is bona fide, and that no one has gone to any supplier and attempted to get such person or company to furnish the materials to the bidder only, or if furnished to any other bidder, that the material shall be at a higher price.

_____
(COMPANY NAME)

_____
(PRESIDENT/VICE PRESIDENT)

Sworn to and subscribed before me this _____ day of _____, 20__.

_____
(SECRETARY/ASSISTANT SECRETARY)

(Affix corporate seal here, if a corporation)

Notary Public: _____

County: _____

Commission Expires: _____

NOTE:

IF THE OFFEROR IS A PARTNERSHIP, ALL OF THE PARTNERS AND ANY OFFICER, AGENT, OR OTHER PERSON WHO MAY HAVE REPRESENTED OR ACTED FOR THEM IN BIDDING FOR OR PROCURING THE CONTRACT SHALL ALSO MAKE THIS OATH.

IF THE OFFEROR IS A CORPORATION, ALL OFFICERS, AGENTS, OR OTHER PERSONS WHO MAY HAVE ACTED FOR OR REPRESENTED THE CORPORATION IN BIDDING FOR OR PROCURING THE CONTRACT SHALL MAKE THE OATH.

FORM B: FULTON COUNTY CERTIFICATE OF ACCEPTANCE OF BID/PROPOSAL REQUIREMENTS

This is to certify that on this day, offeror acknowledges that he/she has read this solicitation document, pages #_____ to #_____ inclusive, including any addenda # to #_____ exhibit(s) #____ to #_____, attachment(s) #_____ to #_____, and/or appendices # to #,_____in its entirety, and agrees that no pages or parts of the document have been omitted, that he/she understands, accepts and agrees to fully comply with the requirements therein, and that the undersigned is authorized by the offeror to submit the proposal herein and to legally obligate the offeror thereto.

This is also to certify that the offeror has reviewed the Fulton County Owner-Contractor Agreement included in the solicitation documents and agrees to be bound by its terms, or that the offeror certifies that it is submitting any proposed modification to the contract terms with its proposal. The offeror further certifies that the failure to submit proposed modifications with the bid/proposal waives the offeror's right to submit proposed modifications later. The offeror also acknowledges that the indemnification and insurance provisions of Fulton County's contract included in the solicitation documents are non-negotiable and that proposed modifications to said terms may be reason to declare the offeror's proposal as non-responsive.

Indicate if Contract exceptions made ____Yes ____No

Company: _____

Signature: _____

Name: _____

Title: _____

Date: _____

(Corporate Seal)

FORM C2: CONTRACTOR'S GEORGIA GENERAL CONTRACTOR'S LICENSE CERTIFICATION

Contractor's Name: _____

General Contractor's License Number: _____

Expiration Date of License: _____

I certify that the above information is true and correct and that the classification noted is applicable to the Bid for this Project.

Signed: _____

Date: _____

(ATTACH COPY OF LICENSE)

FORM C3: GEORGIA PROFESSIONAL LICENSE CERTIFICATION

NOTE: Please complete this form for the work your firm will perform on this project.

Company's Name: _____

Performing work as: Prime Contractor _____ Sub-Contractor _____

Professional License Type: _____

Professional License Number: _____

Expiration Date of License: _____

I certify that the above information is true and correct and that the classification noted is applicable to the Bid for this Project.

Signed: _____

Date: _____

(ATTACH COPY OF LICENSE)

FORM D: CERTIFICATION REGARDING DEBARMENT

(1) The Offeror certifies that neither it or its subcontractors is presently debarred, suspended, proposed for debarment, declared ineligible, or otherwise excluded from doing business with any government agency. Any such exclusion may cause prohibition of your firm from participating in any procurement by the Fulton County Government.

(2) If the Offeror is unable to certify to any of the statements in this certification, such Offeror or subcontractor shall attach an explanation to this bid or proposal.

INSTRUCTIONS FOR CERTIFICATION

By signing and submitting this certification, the Offeror is providing the certification set out below:

(1) The certification in this clause is a material representation of fact upon which reliance will be placed. If it is later determined that the prospective vendor knowingly rendered a false certification, the Purchasing Agent may pursue all available remedies, including suspension and/or debarment, for withdrawal of award or termination of a contract.

(2) The prospective Offeror shall provide immediate written notice to the Purchasing Agent if at anytime the Offeror learns that its certification was erroneous when submitted or has become erroneous by reason of changed circumstances.

(3) Offeror shall be under a continuing duty to immediately inform the Purchasing Agent in writing of any changes, if as a result of such changes, the Offeror certification regarding debarment is affected.

DEBARMENT ORDINANCE

The following Section 2-322 of Fulton County Code of Laws establishes the procedure for the debarment of contractors.

(a) *Authority to suspend.*

After reasonable notice to the entity involved and reasonable opportunity for that entity to be heard, the Purchasing Agent, after consultation with user department, the County Manager and the County Attorney shall have the authority to suspend an entity for cause from consideration for award of county contracts. As used in this section, the term entity means any business entity, individual, firm, contractor, subcontractor or business corporation, partnership, limited liability corporation, firm, contractor, subcontractor or business structured; provided, further, that any such entity shall also be subject to suspension under this section if any of its constituents, members, subcontractors at any tier of such entity's and the entity, or any constituent or member, knew or should have known of the commission of the act. The suspension shall be for a period not to exceed three (3) years unless cause is based on a felony conviction for an offense related or associated with fraudulent contracting or misappropriation of funds wherein the suspension shall not exceed seven (7) years.

(b) *Causes for Suspension. The causes for suspension include:*

(1) Conviction for commission of a criminal offense as an incident to obtain or attempting to obtain a public or private contract or subcontract, or in performance of such contract or subcontract;

(2) Conviction of state or federal statutes of embezzlement, theft, forgery, bribery, falsification or destruction of records, receiving stolen property or other offense indicating a lack of business integrity or business honesty which currently, seriously and directly affects responsibility as a county contractor.

(3) Conviction of state or federal anti-trust statues arising out of the solicitation and submission of bids and proposals;

(4) Violation of contract provisions, as set forth below, of a character which is regarded by the Purchasing Agent to be so serious as to justify suspension action:

a. Failure to perform in accordance with the specifications within a time limit provided in a county contract;

b. A recent record of failure to perform or unsatisfactory performance in accordance with the terms of one or more contracts; provided, that failure to perform or unsatisfactory performance caused by acts beyond the control of the contractor shall not be considered to be a basis for suspension;

c. Material representation of the composition of the ownership or workforce or business entity certified to the county as a minority business enterprise; or

d. Falsification of any documents.

(5) For violation of the ethical standards set forth in Fulton County Code Chapter 9, Code of Ethics.

(6) Knowing misrepresentation to the county, of the use which a majority owned contractor intends to make a minority business enterprise (a business entity at least 51 percent of which is owned and controlled by minority persons, as defined in Fulton County Code Chapter 6, Article B, Minority Business Enterprise Affirmative Action Program and certified as such by the County) as a subcontractor or a joint venture partner, in performing work under contract with the County.

Failure to fully and truthfully provide the information required, may result in the disqualification of your bid/proposal from consideration or termination of the Contract, once awarded. This document must be completed and included as a part of the bid/proposal package along with other required documents.

[SIGNATURES ON NEXT PAGE]

Under penalty of perjury, I declare that I have examined this certification and all attachments hereto, if applicable, to the best of my knowledge and belief, and all statements contained hereto are true, correct, and complete.

On this _____ day of _____, 20__

_____
(Legal Name of Company) (Date)

_____
(Signature of Authorized Representative) (Date)

_____
(Title)

FORM E: DISCLOSURE FORM AND QUESTIONNAIRE

1. Please provide the names and business addresses of each of the Offeror's firm's officers and directors.

   For the purposes of this form, the term "Offeror" means an entity that responds to a solicitation for a County contract by either submitting a proposal in response to a Request for Proposal or a Request for Qualification or a Bid in response to an Invitation to Bid. Describe accurately, fully and completely, their respective relationships with said Offeror, including their ownership interests and their anticipated role in the management and operations of said Offeror.

2. Please describe the general development of said Offeror's business during the past five (5) years, or such shorter period of time that said Offeror has been in business.

3. Please state whether any employee, agent or representative of said Offeror who is or will be directly involved in the subject project has or has ever: (i) directly or indirectly had a business relationship with Fulton County; (ii) directly or indirectly received revenues from Fulton County; or (iii) directly or indirectly receives revenues from the result of conducting business on Fulton County property or pursuant to any contract with Fulton County. Please describe in detail any such relationship.

LITIGATION DISCLOSURE:

Failure to fully and truthfully disclose the information required, may result in the disqualification of your bid or proposal from consideration or termination of the Contract, once awarded.

1. Please state whether any of the following events have occurred in the last five (5) years with respect to said Offeror. If any answer is yes, explain fully the following:

   (a) whether a petition under the federal bankruptcy laws or state insolvency laws was filed by or against said Offeror, or a receiver fiscal agent or similar officer was appointed by a court for the business or property of said Offeror;

   Circle One: YES NO

   (b) whether Offeror was subject of any order, judgment, or decree not subsequently reversed, suspended or vacated by any court of competent jurisdiction, permanently enjoining said Offeror from engaging in any type of business practice, or otherwise eliminating any type of business practice; and

   Circle One: YES NO

   (c) whether said Offeror's business was the subject of any civil or criminal proceeding in which there was a final adjudication adverse to said or Offeror, which directly arose from activities conducted by the business unit or corporate division of said Offeror which submitted a bid or proposal for the subject project. If so please explain.

   Circle One: YES NO

2. Have you or any member of your firm or team to be assigned to this engagement ever been indicted or convicted of a criminal offense within the last five (5) years?

   Circle One: YES NO

3. Have you or any member of your firm or team been terminated (for cause or otherwise) from any work being performed for Fulton County or any other Federal, State or Local Government?

   Circle One: YES NO

4. Have you or any member of your firm or team been involved in any claim or litigation adverse to Fulton County or any other federal, state or local government, or private entity during the last three (3) years?

   Circle One: YES NO

5. Has any offeror, member of offeror's team, or officer of any of them (with respect to any matter involving the business practices or activities of his or her employer), been notified within the five (5) years preceding the date of this offer that any of them are the target of a criminal investigation, grand jury investigation, or civil enforcement proceeding?

   Circle One: YES NO

If you have answered "YES" to any of the above questions, please indicate the name(s) of the person(s), the nature, and the status and/or outcome of the information, indictment, conviction,

termination, claim or litigation, the name of the court and the file or reference number of the case, as applicable. Any such information should be provided on a separate page, attached to this form and submitted with your proposal.

NOTE: If any response to any question set forth in this questionnaire has been disclosed in any other document, a response may be made by attaching a copy of such disclosure. (For example, said Offeror's most recent filings with the Securities and Exchange Commission ("SEC") may be provided if they are responsive to certain items within the questionnaire.) However, for purposes of clarity, Offeror should correlate its responses with the exhibits by identifying the exhibit and its relevant text.

Disclosures must specifically address, completely respond and comply with all information requested and fully answer all questions requested by Fulton County. Such disclosure must be submitted at the time of the bid or proposal submission and included as a part of the bid/proposal submitted for this project. Disclosure is required for Offerors, joint venture partners and first-tier subcontractors.

Failure to provide required disclosure, submit officially signed and notarized documents or respond to any and all information requested/required by Fulton County can result in the bid/proposal declared as non-responsive. This document must be completed and included as a part of the bid/proposal package along with other required documents.

[SIGNATURES ON NEXT PAGE]

Under penalty or\f perjury, I declare that I have examined this questionnaire and all attachments hereto, if applicable, to the best of my knowledge and belief, and all statements contained hereto are true, correct, and complete.

On this _____ day of _____, 20_____

_____
(Legal Name of Company) (Date)

_____
(Signature of Authorized Representative) (Date)

_____
(Title)

Sworn to and subscribed before me,

This _____ day of _____ , 20___

_____
(Notary Public) (Seal)

Commission Expires _____
(Date)

FORM F: GEORGIA SECURITY AND IMMIGRATION CONTRACTOR AFFIDAVIT AND AGREEMENT

Instructions:

Contractors must attest to compliance with the requirements of O.C.G.A 13-10-91 and the Georgia Department of Labor Rule 300-10-01-.02 by executing the Contractor Affidavit provided.

STATE OF GEORGIA

COUNTY OF FULTON

FORM F: GEORGIA SECURITY AND IMMIGRATION CONTRACTOR AFFIDAVIT AND AGREEMENT

By executing this affidavit, the undersigned contractor verifies its compliance with O.C.G.A. 13-10-91, stating affirmatively that the individual, firm or corporation which is engaged in the physical performance of services under a contract with **[insert name of prime contractor]** _____ on behalf of **Fulton County Government** has registered with and is participating in a federal work authorization program* [any of the electronic verification of work authorization programs operated by the United States Department of Homeland Security or any equivalent federal work authorization program operated by the United States Department of Homeland Security to verify information of newly hired employees, pursuant to the Immigration Reform and Control Act of 1986 (IRCA), P.L. 99-603], in accordance with the applicability provisions and deadlines established in O.C.G.A. 13-10-91.

The undersigned further agrees that, should it employ or contract with any subcontractor(s) in connection with the physical performance of services to this contract with **Fulton County Government**, contractor will secure from such subcontractor(s) similar verification of compliance with O.C.G.A/ 13-10-91 on the Subcontractor Affidavit provided in Rule 300-10-01-.08 or a substantially similar form. Contractor further agrees to maintain records of such compliance and provide a copy of each such verification to the **Fulton County Government** at the time the subcontractor(s) is retained to perform such service.

_____
EEV/Basic Pilot Program* User Identification Number

_____
BY: Signature of Authorized Officer or Agent

_____
Title of Authorized Officer or Agent

_____
Printed Name of Authorized Officer or Agent

Sworn to and subscribed before me this _____ day of _____, 20__.

Notary Public: _____

County: _____

Commission Expires: _____

NOTE:

* As of the effective date of O.C.G.A. 13-10-91, the applicable federal work authorization program is the "EEV/Basic Pilot Program" operated by the U.S. Citizenship and Immigration Services Bureau of the U.S. Department of Homeland Security, in conjunction with the Social Security Administration (SSA).

FORM G: GEORGIA SECURITY AND IMMIGRATION SUBCONTRACTOR AFFIDAVIT AND AGREEMENT

Instructions:

In the event that your company is awarded the contract for this project, and will be utilizing the services of any subcontractor(s) in connection with the physical performance of services pursuant to this contract, the following affidavit must be completed by such subcontractor(s). Your company must provide a copy of each such affidavit to Fulton County Government Department of Purchasing & Contract Compliance with the proposal submittal.

All subcontractor affidavit(s) shall become a part of the contract and all subcontractor(s) affidavits shall be maintained by your company and available for inspection by Fulton County Government at any time during the term of the contract. All subcontractor(s) affidavit(s) shall become a part of any contractor/subcontractor agreement(s) entered into by your company.

STATE OF GEORGIA

COUNTY OF FULTON

FORM G: GEORGIA SECURITY AND IMMIGRATION SUBCONTRACTOR AFFIDAVIT AND AGREEMENT

By executing this affidavit, the undersigned subcontractor verifies its compliance with O.C.G.A. 13-10-91, stating affirmatively that the individual, firm or corporation which is engaged in the physical performance of services under a contract with **[insert name of prime contractor]** _____behalf of **Fulton County Government** has registered with and is participating in a federal work authorization program* [any of the electronic verification of work authorization programs operated by the United States Department of Homeland Security or any equivalent federal work authorization program operated by the United States Department of Homeland Security to verify information of newly hired employees, pursuant to the Immigration Reform and Control Act of 1986 (IRCA), P.L. 99-603], in accordance with the applicability provisions and deadlines established in O.C.G.A. 13-10-91.

_____
EEV/Basic Pilot Program* User Identification Number

_____
BY: Signature of Subcontractor Authorized Officer or Agent

_____
Title of Subcontractor Authorized Officer or Agent

_____
Printed Name of Subcontractor Authorized Officer or Agent

Sworn to and subscribed before me this _____ day of _____, 20__.

Notary Public: _____

County: _____

Commission Expires: _____

NOTE:

* As of the effective date of O.C.G.A. 13-10-91, the applicable federal work authorization program is the "EEV/Basic Pilot Program" operated by the U.S. Citizenship and Immigration Services Bureau of the U.S. Department of Homeland Security, in conjunction with the Social Security Administration (SSA).

CONTRACT COMPLIANCE REQUIREMENTS

NON-DISCRIMINATION IN PURCHASING AND CONTRACTING

It is the policy of Fulton County Government that discrimination against businesses by reason of the race, color, gender or national origin of the ownership of any such business is prohibited. Furthermore, it is the policy of the Board of Commissioners ("Board") that Fulton County and all vendors and contractors doing business with Fulton County shall provide to all businesses the opportunity to participate in contracting and procurement paid, in whole or in part, with monetary appropriations of the Board without regard to the race, color, gender or national origin of the ownership of any such business. Similarly, it is the policy of the Board that the contracting and procurement practices of Fulton County should not implicate Fulton County as either an active or passive participant in the discriminatory practices engaged in by private contractors or vendors seeking to obtain contracts with Fulton County.

Implementation of Equal Employment Opportunity (EEO) Policy

The County effectuates Equal Employment Opportunity thru Policy #800-8, Non-Discrimination in Contracting and Procurement. This policy considers racial and gender workforce availability. The availability of each workgroup is derived from the work force demographics set forth in the 2000 Census EEO file prepared by the United States Department of Commerce for the applicable labor pool normally utilized for the contract.

Monitoring of EEO Policy

Upon award of a contract with Fulton County, the successful bidder/proposer must complete an Equal Employment Opportunity Report (EEOR), describing the racial and gender make-up of the firm's work force. If the EEOR indicates that the firm's demographic composition indicates underutilization of employee's of a particular ethnic group for each job category, the firm will be required to submit an aggressive action plan setting forth steps the firm will take to address the identified underutilization.

DETERMINATION OF GOOD FAITH EFFORTS

During the course of the project, the Prime Contractor shall demonstrate that they have made all efforts reasonably possible to ensure that Minority and Female Business Enterprises (MFBE) have had a full and fair opportunity to compete and win subcontracts on this project. The Prime Contractor is required to include all outreach attempts that would demonstrate a "Good Faith Effort" in the solicitation of sub-consultants/subcontractors.

Written documentation demonstrating the Prime Contractor's outreach efforts to identify, contact, contract with or utilize Minority or Female owned businesses shall include holding pre-bid conferences, publishing advertisements in general circulation media, trade association publications, minority-focused media, and the County's bid board, as well as other efforts.

Include a list of publications where the advertisement was placed as well as a copy of the advertisement. Advertisement shall include at a minimum, scope of work, project location, location(s) of where plans and specifications may be viewed or obtained and trade or scopes of work for which subcontracts are being solicited.

EQUAL BUSINESS OPPORTUNITY PLAN (EBO PLAN)

In addition to the proposal submission requirements, each vendor **must** submit an Equal Business Opportunity Plan (EBO Plan) with their bid/proposal. The EBO Plan is designed to enhance the utilization of a particular racial, gender or ethnic group by a bidder/proposer, contractor, or vendor or by Fulton

County. The respondent **must** outline a plan of action to encourage and achieve diversity and equality in the available procurement and contracting opportunities with *this solicitation*.

The EBO Plan **must** identify and include:

1. Potential opportunities within the scope of work of *this solicitation* that will allow for participation of racial, gender or ethnic groups.

2. Efforts that will be made by the bidder/proposer to encourage and solicit minority and female business utilization in *this solicitation*.

Fulton County encourages joint ventures, teaming, partnering and mentor-protégé relationships with minority and female businesses in an effort to achieve contracting and procurement diversity.

Prompt Payment: The prime contractor **must** certify in writing and **must** document all subcontractors, sub-consultants and suppliers have been promptly paid for work and materials, (less any retainage by the prime contractor prior to receipt of any further progress payments). In the event the prime contractor is unable to pay subcontractors, sub-consultants or suppliers until it has received a progress payment from Fulton County, the prime contractor shall pay all subcontractors, sub-consultants or suppliers funds due from said progress payment within forty-eight (48) hours of receipt of payment from Fulton County. In no event shall a subcontractor, sub-consultant or supplier be paid later than fifteen (15) days as provided for by state law.

REQUIRED FORMS AND EBO PLAN

In order to be compliant with the intent and provisions of the Fulton County Non-Discrimination in Purchasing and Contracting Ordinance (99-0960), bidders/proposers **must** submit the following completed documents. Failure to provide this information **shall** result in the proposal being deemed non-responsive.

- Exhibit A – Promise of Non-Discrimination
- Exhibit B – Employment Report
- Exhibit C – Schedule of Intended Subcontractor Utilization
- Exhibit D – Letter of Intent to Perform as a Subcontractor or Provide Materials or Services
- Exhibit E – Declaration Regarding Subcontractors Practices
- Exhibit F – Joint Venture Disclosure Affidavit
- Equal Business Opportunity Plan (EBO Plan). This document is not a form rather a statement created by the bidder/proposer on its company letter head addressing the EBO Plan requirements.
- Exhibit H – First Source Jobs Program Information, Form 2

The following document must be completed as instructed if awarded the project:

- Exhibit G – Prime Contractor's Subcontractor Utilization Report
- Exhibit H – First Source Jobs Program Agreement, Form 3

All Contract Compliance documents (Exhibits A – H and EBO Plan) are to be placed in a **separate sealed envelope** clearly marked "Contract Compliance". The EBO Plan must be submitted on company letterhead. These documents are considered part of and should be submitted with the Technical Proposal.

EXHIBIT A – PROMISE OF NON-DISCRIMINATION

"Know all persons by these presents, that I/We (_____),
Name

_____ _____
Title Company Name

Hereinafter "Company", in consideration of the privilege to bid on or obtain contracts funded, in whole or in part, by Fulton County, hereby consent, covenant and agree as follows:

1) No person shall be excluded from participation in, denied the benefit of, or otherwise discriminated against on the basis of race, color, national origin or gender in connection with any bid submitted to Fulton County for the performance of any resulting there from,

2) That it is and shall be the policy of this Company to provide equal opportunity to all businesses seeking to contract or otherwise interested in contracting with this Company without regard to the race, color, gender or national origin of the ownership of this business,

3) That the promises of non-discrimination as made and set forth herein shall be continuing in nature and shall remain in full force and effect without interruption,

4) That the promise of non-discrimination as made and set forth herein shall be made a part of, and incorporated by reference into, any contract or portion thereof which this Company may hereafter obtain,

5) That the failure of this Company to satisfactorily discharge any of the promises of non-discrimination as made and set forth herein shall constitute a material breach of contract entitling the Board to declare the contract in default and to exercise any and all applicable rights and remedies, including but not limited to cancellation of the contract, termination of the contract, suspension and debarment from future contracting opportunities, and withholding and/or forfeiture of compensation due and owning on a contract; and

6) That the bidder shall provide such information as may be required by the Director of Contract Compliance pursuant to Section 4.4 of the Fulton County Non-Discrimination in Purchasing and Contracting Ordinance.

SIGNATURE:_____

PRINTED NAME:_____

ADDRESS:_____

_____

TELEPHONE NUMBER:_____

EMAIL ADDRESS:_____

EXHIBIT B – EMPLOYMENT REPORT

The demographic employment make-up for the bidder must be identified and submitted with this bid/proposal. In addition, if subcontractors will be utilized by the bidder/proposer to complete this project, then the demographic employment make-up of the subcontractor(s) must be identified and submitted with this bid.

JOB CATEGORIES	**TOTAL EMPLOYED**		**TOTAL MINORITIES**		WHITE (Not Hispanic Origin)		BLACK or AFRICAN AMERICAN (Not of Hispanic Origin)		HISPANIC or LATINO		AMERICAN INDIAN or ALASKAN NATIVE (AIAN)		ASIAN		NATIVE HAWAIIAN or OTHER PACIFIC ISLANDER (NHOP)		TWO or MORE RACES	
	M	**F**	**M**	**F**	**M**	**F**	**M**	**F**	**M**	**F**	**M**	**F**	**M**	**F**	**M**	**F**	**M**	**F**
EXECUTIVE/SENIOR LEVEL OFFICIALS and MANAGERS																		
FIRST/MID LEVEL OFFICIALS and MANAGERS																		
PROFESSIONALS																		
TECHNICIANS																		
SALES WORKERS																		
ADMINISTRATIVE SUPPORT WORKERS																		
CRAFT WORKERS																		
OPERATIVES																		
LABORERS & HELPERS																		
SERVICE WORKERS																		
TOTAL																		

FIRMS'S NAME _____

ADDRESS _____

TELEPHONE _____

This completed form is for (Check only one): _____ Bidder/Proposer _____ Subcontractor

Submitted by: _____ Date Completed: _____

EXHIBIT C - SCHEDULE OF INTENDED SUBCONTRACTOR UTILIZATION

If the bidder/proposer intends to subcontract any portion of this scope of work/service(s), this form **must be** completed and **submitted with the bid/proposal.** All prime bidders/proposers **must** include Letter(s) of Intent (Exhibit D) in the bid document for all subcontractors who will be utilized under the scope of work/services.

Prime Bidder/Proposer:_____

ITB/RFP Number:_____

Project Name or Description of Work/Service(s):_____

_____

_____

1. My firm, as Prime Bidder/Proposer on this scope of work/service(s) is_____is not___a minority or female owned and controlled business enterprise. (Please indicate below the portion of work, including, percentage of bid/proposal amount that your firm will carry out directly):

   _____
   _____

2. If the Prime Bidder/Proposer is a Joint Venture, please complete Exhibit F: Joint Venture Disclosure Affidavit and attach a copy of the executed Joint Venture Agreement.

3. Sub-Contractors (including suppliers) to be utilized in the performance of this scope of work/service(s), if awarded, are:

SUBCONTRACTOR NAME:_____
ADDRESS:_____
_____
PHONE:_____
CONTACT PERSON:_____
ETHNIC GROUP*:_____COUNTY CERTIFIED**_____
WORK TO BE PERFORMED:_____
_____
DOLLAR VALUE OF WORK: $_____ PERCENTAGE VALUE:_____%

***Ethnic Groups: African American (AABE); Asian American (ABE); Hispanic American (HBE); Native American (NABE); White Female American (WFBE); **If yes, please attach copy of recent certification.**

SUBCONTRACTOR NAME:_____
ADDRESS:_____
_____
PHONE:_____
CONTACT PERSON:_____
ETHNIC GROUP*:_____ COUNTY CERTIFIED**_____
WORK TO BE PERFORMED:_____
_____
DOLLAR VALUE OF WORK: $_____ PERCENTAGE VALUE:___%

SUBCONTRACTOR NAME:_____
ADDRESS:_____
_____
PHONE:_____
CONTACT PERSON:_____
ETHNIC GROUP*:_____ COUNTY CERTIFIED**_____
WORK TO BE PERFORMED:_____
_____
DOLLAR VALUE OF WORK: $_____ PERCENTAGE VALUE:___%

SUBCONTRACTOR NAME:_____
ADDRESS:_____
_____
PHONE:_____
CONTACT PERSON:_____
ETHNIC GROUP*:_____ COUNTY CERTIFIED**_____
WORK TO BE PERFORMED:_____
_____
DOLLAR VALUE OF WORK: $_____ PERCENTAGE VALUE:___%

SUBCONTRACTOR NAME:_____
ADDRESS:_____
_____
PHONE:_____
CONTACT PERSON:_____
ETHNIC GROUP*:_____ COUNTY CERTIFIED**_____
WORK TO BE PERFORMED:_____
_____
DOLLAR VALUE OF WORK: $_____ PERCENTAGE VALUE:___%

***Ethnic Groups: African American (AABE); Asian American (ABE); Hispanic American (HBE); Native American (NABE); White Female American (WFBE); **If yes, please attach copy of recent certification.**

Total Dollar Value of Subcontractor Agreements: ($)

Total Percentage Value: (%)

CERTIFICATION: The undersigned certifies that he/she has read, understands and agrees to be bound by the Bid/Proposer provisions, including the accompanying Exhibits and other terms and conditions regarding sub-contractor utilization. The undersigned further certifies that he/she is legally authorized by the Bidder/Proposer to make the statement and representation in this Exhibit and that said statements and representations are true and correct to the best of his/her knowledge and belief. The undersigned understands and agrees that if any of the statements and representations are made by the Bidder/Proposer knowing them to be false, or if there is a failure of the intentions, objectives and commitments set forth herein without prior approval of the County, then in any such event the Contractor's acts or failure to act, as the case may be, shall constitute a material breach of the contract, entitling the County to terminate the Contract for default. The right to so terminate shall be in addition to, and in lieu of, any other rights and remedies the County may have for other defaults under the contract.

Signature:_____ **Title:**_____

Firm or Corporate Name:_____

Address:_____

_____

Telephone: ( )_____

Fax Number: ( )_____

Email Address:_____

EXHIBIT D

LETTER OF INTENT TO PERFORM AS A SUBCONTRACTOR OR PROVIDE MATERIALS OR SERVICES

This form **must** be completed by **ALL** known subcontractor and submitted with the bid/proposal. The Prime Contractor **must** submit Letters of Intent for **ALL** known subcontractors at time of bid submission.

To: _____
(Name of Prime Contractor Firm)

From: _____
(Name of Subcontractor Firm)

ITB/RFP Number: _____

Project Name: _____

The undersigned is prepared to perform the following described work or provide materials or services in connection with the above project (specify in detail particular work items, materials, or services to be performed or provided):

Description of Work	Project Commence Date	Project Completion Date	Estimated Dollar Amount

_____ _____
(Prime Bidder) **(Subcontractor)**

Signature _____ **Signature** _____

Title _____ **Title** _____

Date _____ **Date** _____

EXHIBIT E - DECLARATION REGARDING SUBCONTRACTING PRACTICES

If the bidder/proposer **does not intend to subcontract** any portion of the scope of work services(s), this form **must be** completed and submitted with the bid/proposal.

_____ hereby declares that it is my/our intent to
(Bidder)

perform 100% of the work required for _____
(ITB/RFP Number)

_____
(Description of Work)

In making this declaration, the bidder/proposer states the following:

1. That the bidder/proposer does not customarily subcontract elements of this type project, and normally performs and has the capability to perform and will perform **all elements** of the work on this project with his/her own current work forces;

2. If it should become necessary to subcontract some portion of the work at a later date, the bidder/proposer will comply with all requirements of the County's Non-Discrimination Ordinance in providing equal opportunities to all firms to subcontract the work. The determination to subcontract some portion of the work at a later date shall be made in good faith and the County reserves the right to require additional information to substantiate a decision made by the bidder/proposer to subcontract work following the award of the contract. Nothing contained in this provision shall be employed to circumvent the spirit and intent of the County's Non-Discrimination Ordinances;

3. The bidder will provide, upon request, information sufficient for the County to verify Item Number one.

AUTHORIZED COMPANY REPRESENTATIVE

Name: _____ **Title:** _____ **Date:** _____

Signature: _____

Firm: _____

Address: _____

Phone Number: _____

Fax Number: _____

Email Address: _____

EXHIBIT F - JOINT VENTURE DISCLOSURE AFFIDAVIT

ITB/RFP No._____

Project Name_____

This form must be completed and submitted with the bid/proposal if a joint venture approach is to be undertaken.

In order to evaluate the extent of small, minority and female business involvement being proposed by a Bidder/Proposer, certain relevant information must be provided prior to contract award. The information requested below is to clearly identify and explain the extent of small business participation in the proposed joint venture. All items must be properly addressed before the business entity can be evaluated.

1. **Firms:**

   1) **Name of Business:**_____
      Street Address:_____
      Telephone No.:_____
      Nature of Business:_____

   2) **Name of Business:**_____
      Street Address:_____
      Telephone No.:_____
      Nature of Business:_____

   3) **Name of Business:**_____
      Street Address:_____
      Telephone No.:_____
      Nature of Business:_____

NAME OF JOINT VENTURE (If applicable):_____

ADDRESS:_____

_____

PRINCIPAL OFFICE:_____

OFFICE PHONE:_____

Note: Attach additional sheets as required

1. Describe the capital contributions by each joint venturer and accounting thereof.

2. Describe the financial controls of the joint venture, e.g., will a separate cost center be established? Which venturer will be responsible for keeping the books? How will the expense therefore be reimbursed? What is the authority of each joint venture to commit or obligate the order?

3. Describe any ownership, options for ownership, or loans between the joint ventures. Identify terms thereof.

4. Describe the estimated contract cash flow for each joint venturer.

5. To what extent and by whom will the on-site work be supervised?

6. To what extent and by whom will the administrative office be supervised?

7. Which joint venturer will be responsible for material purchases including the estimated cost thereof? How will the purchase be financed?

8. Which joint venturer will provide equipment? What is the estimated cost thereof? How will the equipment be financed?

9. Describe the experience and business qualifications of each joint venturer.

10. Submit a copy of all joint venture agreements and evidence of authority to do business in the State of Georgia as well as locally, to include all necessary business licenses.

11. Percent of Minority/Female Business Enterprises ownership by each joint venture in terms of profit and loss sharing:_____

12. The authority of each joint venturer to commit or obligate the other:_____

13. Number of personnel to be involved in project, their crafts and positions and whether they are employees of the Minority/Female Business Enterprises enterprise, the majority firm or the joint venture: _____

14. Identification of control and participation in venture; list those individuals who are responsible for day-to-day management and policy decision-maker, including, but not limited to, those with prime responsibility for areas designated below; (use additional sheets if necessary)

Name	Race	Sex	Financial Decisions	Supervision Field Operation
_____	_____	_____	_____	_____
_____	_____	_____	_____	_____
_____	_____	_____	_____	_____
_____	_____	_____	_____	_____
_____	_____	_____	_____	_____

In connection with any work that these firms, as a joint venture, might be authorized to perform in connection with above captioned contract, we each do hereby authorize representatives of the Fulton County Department of Contract Compliance, Departments of Purchasing and Contract Compliance, and Finance, under the direction of the County Manger's Office, to examine, from time to time, the books, records and files to the extent that such relate to this County project.

WE DO SOLEMNLY DECLARE AND AFFIRM UNDER THE PENALTIES OF PERJURY THAT THE CONTENTS OF THE FOREGOING DOCUMENT ARE TRUE AND CORRECT, AND THAT WE ARE AUTHORIZED, ON BEHALF OF THE ABOVE FIRMS, TO MAKE THIS AFFIDAVIT AND GRANT THE ABOVE PRIVILEGE.

FOR_____
(Company)

Date:_____ _____
(Signature of Affiant)

_____
(Printed Name)

_____
(Company)

Date:_____ _____
(Signature of Affiant)

_____
(Printed Name)

State of_____:

County of_____:

On this _____ day of _____, 20____, before me, appeared _____, the undersigned officer, personally appeared _____ known to me to be the person described in the foregoing Affidavit and acknowledges that he (she) executed the same in the capacity therein stated and for the purpose therein contained.

EXHIBIT – G PRIME CONTRACTOR/SUB-CONTRACTOR UTILIZATION REPORT

This report **must** be submitted by the **tenth day** of each month, along with a copy of your monthly invoice (schedule of values/payment application) to Contract Compliance. Failure to comply **shall** result in the County commencing proceedings to impose sanctions to the prime contractor, in addition to pursuing any other available legal remedy. Sanctions may include the suspending of any payment or part thereof, termination or cancellation of the contract, and the denial of participation in any future contracts awarded by Fulton County.

REPORTING PERIOD		**PROJECT NAME:**	
FROM:		**PROJECT NUMBER:**	
TO:		**PROJECT LOCATION:**	

PRIME CONTRACTOR		**Contract Award Date**	**Contract Award Amount**	**Change Order Amount**	**Contract Period**	**% Complete to Date**
Name:						
Address:						
Telephone #:						

AMOUNT OF REQUISITION THIS PERIOD: $_____
TOTAL AMOUNT REQUISITION TO DATE: $_____
TOTAL AMOUNT REQUISITION TO DATE: $_____

SUBCONTRACTOR UTILIZATION (add additional rows as necessary)

Name of Sub-Contractor	**Description of Work**	**Contract Amount**	**Amount Paid To Date**	**Amount Requisition This Period**	**Contract Period Starting Date**	**Ending Date**
TOTALS						

Executed By: _____ _____
(Signature) *(Printed Name)*

Notary: _____ **Date:** _____ **My Commission Expires:** _____

Should you have questions regarding any of the documents contained in Section 6, please feel free to address questions/inquiries to Linda.Walton@fultoncountyga.gov

EXHIBIT H

FULTON COUNTY FIRST SOURCE JOBS PROGRAM

STATEMENT OF POLICY:

It is the policy of Fulton County Government to provide employment opportunities to the citizens of Fulton County. This policy will apply to all contracts procured through the Department of Purchasing & Contract Compliance valued in excess of $200,000. The Prime Contractor is expected to utilize the First Source Jobs Program to fill 50% of the entry level jobs which arise as a result of any project funded in whole or in part with County funds with residents of Fulton County.

PURPOSE:

The purpose of this policy is to create a pool of employable persons who are residents of Fulton County to be called upon as a source to fill jobs created as a result of any eligible project funded in whole or in part with County funds in order to provide stable economic opportunities for families throughout the County. The First Source Jobs Program will be implemented by the Department of Purchasing & Contract Compliance and the Office of Workforce Development.

MONITORING POLICY:

Upon execution of a contract with Fulton County Government, the First Source Jobs Agreement (FSJ Form 2) will become a part of the contract between the bidder/proposer and Fulton County Government. The First Source Jobs Program will be monitored during routine site visits by the Office of Contract Compliance along with the Office of Workforce Development.

FORM 1

FULTON COUNTY

First Source Jobs Program Information

Company Name: _____

Project Number: _____

Project Name: _____

The following entry-level positions will become available as a result of the above referenced contract with Fulton County.

1. _____

2. _____

3. _____

4. _____

5. _____

6. _____

Include a job description and all required qualifications for each position listed above.

Identify a company representative and contact phone number who will be responsible for coordinating with the First Source Jobs Program:

Company Representative: _____

Phone Number: _____

Email Address: _____

FORM 2

FULTON COUNTY
First Source Jobs Program Agreement

Awarded Contractor's Name: _____

Formal Contract Name: _____

RFP/ITB Number: _____

Contact Person: _____

Contact Phone: _____

The contractor listed above agrees to the following:

1. The contractor shall make a good faith effort to fill 50% of the entry level position(s) created by this project using the Fulton County First Source Jobs Program.

2. The contractor shall provide the applicable details of every entry level job in writing within the required form.

3. The contractor shall be expected to present documentation that confirms employment terms to both the employee and Fulton County.

The Office of Contract Compliance will assist with monitoring the participation of First Source Jobs Program employees during routine site visits and report findings to the Office of Workforce Development for confirmation and follow-up. The Office of Workforce Development shall notify the Director of Human Services and the Purchasing Agent of any determination of non-compliance with the requirements of this policy and recommend a resolution or action to be taken.

Upon a determination by the Purchasing Agent and the Director of Human Services that a contractor has failed to comply with any portion of this policy, the County may impose the following:

1. Ten percent (10%) of all future payments under the involved eligible project shall be entitled to be withheld from a contractor that has violated this policy until the contractor complies with the provisions of this policy.

The undersigned agrees to the terms and conditions set forth in this agreement.

Contractor's Official Title: _____ Date: _____

Contractor's Name: _____

Contractor's Signature: _____

FORM 3

INSURANCE AND RISK MANAGEMENT PROVISIONS
Juvenile Court Building Entrance Security Renovation

It is Fulton County Government's practice to obtain Certificates of Insurance from our Contractors and Vendors. Insurance must be written by a licensed agent in a company licensed to write insurance in the State of Georgia, with an A.M. Best rating of at least A- VI, subject to final approval by Fulton County. Respondents shall submit with the bid/proposal evidence of insurability satisfactory to Fulton County Government as to form and content. Either of the following forms of evidence is acceptable:

- A letter from an insurance carrier stating that upon your firm/company being the successful Bidder/Respondent that a Certificate of Insurance shall be issued in compliance with the Insurance and Risk Management Provisions outlined below.
- A Certificate of Insurance complying with the Insurance and Risk Management Provisions outlined below (Request for Bid/Proposal number and Project Name, Number and Description must appear on the Certificate of Insurance).
- A combination of a specific policy written with an umbrella policy covering liabilities in excess of the required limits is acceptable to achieve the applicable insurance coverage levels.

Upon award, the Contractor/Vendor must maintain at their expense, insurance with policy limits equal to or greater than the limits described below. Proof of insurance must be provided to Fulton County Government prior to the start of any activities/construction as described in the bid document(s). Any and all Insurance Coverage(s) and Bonds required under the terms and conditions of the contract shall be maintained during the entire length of the contract, including any extensions or renewals thereto, and until all work has been completed to the satisfaction of Fulton County Government.

Accordingly the Respondent shall provide a certificate evidencing the following:

1. **WORKERS COMPENSATION/EMPLOYER'S LIABILITY INSURANCE – STATUTORY (In compliance with the Georgia Workers Compensation Acts, including but not limited to U.S. Longshoremen and Harbor Workers Act and any other State or Federal Acts or Provisions in which jurisdiction may be granted)**

Employer's Liability Insurance	BY ACCIDENT	EACH ACCIDENT	$1,000,000
Employer's Liability Insurance	BY DISEASE	POLICY LIMIT	$1,000,000
Employer's Liability Insurance	BY DISEASE	EACH EMPLOYEE	$1,000,000

2. **COMMERCIAL GENERAL LIABILITY INSURANCE (Including contractual Liability Insurance)**

Bodily Injury and Property Damage Liability	Each Occurrence	$1,000,000
(Other than Products/Completed Operations)	General Aggregate	$2,000,000
Products\Completed Operation	Aggregate Limit	$2,000,000
Personal and Advertising Injury	Limits	$1,000,000
Damage to Rented Premises	Limits	$100,000

**To Include Completed Operations for 3 Years after final payment.

3. **BUSINESS AUTOMOBILE LIABILITY INSURANCE**
   Combined Single Limits Each Occurrence $1,000,000
   (Including operation of non-owned, owned, and hired automobiles).

4. **UMBRELLA LIABILITY** Per Occurrence $1,000,000

5. **BUILDERS' RISK:** To be written on a Builders Risk "All-risk" form that shall at least include insurance for physical loss or damage to the work, temporary buildings, false work, and materials and equipment in transit, and shall insure against at least the following perils or causes of loss: fire, lightning, extended coverage, theft, vandalism, malicious mischief, earthquake, collapse, debris removal, demolition occasioned by enforcement of Laws and Regulations, water damage (other than caused by flood), and such other perils or causes of loss as may be specifically required by Supplementary Conditions) until Final Completion and Acceptance of the Project. Such policy of insurance shall contain at least the following sub-limits of insurance and deductibles:

Sub-limits:	
Property in Transit	$1,000,000
Property in Offsite Storage	$1,000,000
Plans & Blueprints	$25,000
Debris Removal	25% of Insured Physical Loss
Delay in Completion / Soft Cost	TBD
Ordinance of Law (Increased Cost of Construction)	$1,000,000
Flood and Earthquake	TBD – Full Contract Value
Deductibles:	
Flood and Earthquake	$25,000
Water Damage other than Flood	$100,000
All other Perils	$10,000

Owner and Contractor waive all rights against each other and any of their subcontractors, sub-subcontractors, agents and employees, each of the other, for damages caused by fire or other causes of loss to the extent covered by property insurance obtained pursuant to this Section, or other property insurance applicable to the Work, accept such rights as they have to the proceeds of such insurance.

Certificates of Insurance

Certificates shall state that the policy or policies shall not expire, be cancelled or altered without at least thirty (30) days prior written notice to Fulton County Government. Policies and Certificates of Insurance are to list Fulton County Government as an Additional Insured (except for Workers' Compensation) and shall conform to all terms and conditions (including coverage of the indemnification and hold harmless agreement) contained in the Insurance and Risk Management Provisions.

If Fulton County Government shall so request, the Respondent, Contractor or Vendor will furnish the County for its inspection and approval such policies of insurance with all endorsements, or confirmed specimens thereof certified by the insurance company to be true and correct copies.

The Contractor agrees to name the Owner and all other parties required of the Contractor/Vendor shall be included as additional insureds on the CGL, using ISO Additional Insured Endorsement forms CG 2010 11/85 or its equivalent coverage to the additional insureds. This insurance for the additional insureds shall be as broad as the coverage provided for the named insured Subcontractor. It shall apply as Primary Insurance before any other insurance or self-insurance, including any deductible, non-contributory, and Waiver of Subrogation provided in favor of Fulton County.

Additional Insured under the General Liability, Auto Liability, Umbrella Policies (with exception of Workers Compensation and Professional Liability), with no Cross Suits exclusion.

Important:
It is understood that **Insurance in no way Limits the Liability of the Contractor/Vendor.**

USE OF PREMISES

Contractor/Vendor shall confine its apparatus, the storage of materials and the operations of its workers to limits/requirements indicated by law, ordinance, permits and any restrictions of Fulton County Government and shall not unreasonably encumber the premises with its materials.

PROTECTION OF PROPERTY

Contractor/Vendor will adequately protect its own work from damage, will protect Fulton County Government's property from damage or loss and will take all necessary precautions during the progress of the work to protect all persons and the property of others from damage or loss.

Contractor/Vendor shall take all necessary precautions for the safety of employees of the work and shall comply with all applicable provisions of the Federal, State and local safety laws and building codes to prevent accidents or injury to persons on, about, or adjacent to the premises where work is being performed.

Contractor/Vendor shall erect and properly maintain at all times as required by the conditions and progress of the work, all necessary safeguards for the protection of its employees, Fulton County Government employees and the public and shall post all applicable signage and other warning devices t protect against potential hazards for the work being performed.

INDEMNIFICATION AND HOLD HARMLESS AGREEMENT

Contractor/Vendor hereby agrees to release, indemnify, defend and hold harmless Fulton County, its Commissioners, officers, employees, sub-consultants, successors, assigns and agents, from and against any and all losses (including death), claims, damages, liabilities, costs and expenses (including but not limited to all actions, proceedings, or investigations in respect thereof and any costs of judgments, settlements, court costs, attorney's fees or expenses, regardless of the outcome of any such action, proceeding, or investigation), caused by, relating to, based upon or arising out of any act or omission by Consultant, its directors, officers, employees, sub-consultants, successors, assigns or agents, or otherwise in connection (directly or indirectly) with its acceptance, or the performance, or nonperformance, of its obligations under these agreements. Such obligations shall not be construed to negate, abridge or otherwise reduce any other rights or obligations of indemnity which would otherwise exist as to any party or person as set forth in this paragraph.

Contractor/Vendor further agrees to protect, defend, indemnify and hold harmless Fulton County, its Commissioners, officers, employees, sub-consultants, successors, assigns and agents from and against any and all claims or liability for compensation under the Worker's Compensation Act, Disability Benefits Act, or any other employee benefits act arising out of injuries sustained by any employees of Consultant. These indemnities shall not be limited by reason of the listing of any insurance coverage.

CONTRACTOR/VENDOR ACKNOWLEDGES HAVING READ, UNDERSTANDING, AND AGREEING TO COMPLY WITH THIS INDEMNIFICATION AND HOLD HARMLESS AGREEMENT, AND THE REPRESENTATIVE OF THE CONTRACTOR/VENDOR IDENTIFIED BELOW IS AUTHORIZED TO SIGN CONTRACTS ON BEHALF OF THE RESPONDING CONTRACTOR/VENDOR.

COMPANY: _____ SIGNATURE: _____

NAME: _____ TITLE: _____

DATE: _____

OWNER-CONTRACTOR AGREEMENT

13ITB87339K-LW Fulton County Juvenile Court Building Entrance Security Renovation

Contractor: _____ Project No. _____

Address: _____ Telephone: _____

Contact: _____ Email: _____

THIS AGREEMENT is effective as of the _____ day of _____, 2013, by and between Fulton County, a political subdivision of the State of Georgia (hereinafter called the "County"), and the above named CONTRACTOR in accordance with all provisions of this Construction agreement, consisting of the following Contract Documents:

Exhibit A: General Conditions
Exhibit B: Special Conditions
Exhibit C: Addenda
Exhibit D: Bid Form
Exhibit E: Bonds (Bid, Payment & Performance)
Exhibit F: Scope of Work and Technical Specifications
Exhibit G: Exhibits
Exhibit H: Purchasing Forms
Exhibit I: Office of Contract Compliance Forms
Exhibit J: Risk Management Insurance Provisions Forms

WITNESSETH: That the said Contractor has agreed, and by these presents does agree with the said County, for and in consideration of a Contract Price of **[INSERT CONTRACT AMOUNT IN WORDS]**, ($**[INSERT CONTRACT AMOUNT IN NUMBERS]**) and other good and valuable consideration, and under the penalty expressed on Bonds hereto attached, to furnish all equipment, tools, materials, skill, and labor of every description necessary to carry out and complete in good, firm, and substantial, and workmanlike manner, the Work specified, in strict conformity with the Drawings and the Specifications hereinafter set forth, which Drawings and Specifications together with the bid submittals made by the Contractor, General Conditions, Special Provisions, Detailed Specifications, Exhibits, and this Agreement, shall all form essential parts of this Contract. The Work covered by this Contract includes all Work indicated on Plans and Specifications and listed in the Bid entitled:

Project Number: 13ITB87339K-LW

Fulton County Juvenile Court Building Entrance Security Renovation

The Contractor, providing services as an Independent Contractor, shall commence the Work with adequate force and equipment within 10 days from receipt of Notice to Proceed ("NTP") from the County, and shall complete the work within **120** calendar days from the Notice to Proceed or the date work begins, whichever comes first. The Contractor shall remain responsible for performing, in accordance with the terms of the contract, all work assigned prior to the expiration of the said calendar days allowed for completion of the work even if the work is not completed until after the expiration of such days. The Contractor shall agree that in the performance of this contract he will comply with all lawful agreements, if any, which the contractor has made with any association, union or other entity, with respect to wages, salaries and working conditions, so as to cause inconvenience, picketing or work stoppage.

As full compensation for the faithful performance of this Contract, the County shall pay the Contractor in accordance with the General Conditions and the prices stipulated in the Bid, hereto attached.

It is further mutually agreed between the parties hereto that if, at any time after the execution of this Agreement and the Surety Bonds hereto attached for its faithful performance, the County shall deem the surety or sureties upon such bonds to be unsatisfactory, or, if, for any reason, such bonds cease to be adequate to cover the performance of the Work, the Contractor shall, at his expense, within five days after receipt of notice from the County so to do, furnish an additional bond or bonds in such form and amount, and with such surety or sureties as shall be satisfactory to the County. In such event no further payment to the Contractor shall be deemed to be due under this Agreement until such new or additional security for the faithful performance of the Work shall be furnished in manner and form satisfactory to the County.

The Contractor hereby assumes the entire responsibility and liability for any and all injury to or death of any and all persons, including the Contractor's agents, servants, and employees, and in addition thereto, for any and all damages to property caused by or resulting from or arising out of any act or omission in connection with this contract or the prosecution of work hereunder, whether caused by the Contractor or the Contractor's agents, Servants, or employees, or by any of the Contractor's subcontractors or suppliers, and the Contractor shall indemnify and hold harmless the County, the Construction Manager, County's Commissioners, officers, employees, successors, assigns and agents, or any of their subcontractors from and against any and all loss and/or expense which they or any of them may suffer or pay as a result of claims or suits due to, because of, or arising out of any and all such injuries, deaths and/or damage, irrespective of County or Construction Manager negligence (except that no party shall be indemnified for their own sole negligence). The Contractor, if requested, shall assume and defend at the Contractor's own expense, any suit, action or other legal proceedings arising there from, and the Contractor hereby agrees to satisfy, pay, and cause to be discharged of record any judgment which may be rendered against the County and the Construction Manager arising there from.

In the event of any such loss, expense, damage, or injury, or if any claim or demand for damages as heretofore set forth is made against the County or the Construction Manager, the County may withhold from any payment due or thereafter to become due to the Contractor under the terms of this Contract, an amount sufficient in its judgment to protect and indemnify it and the Construction Manager, County's Commissioners, officers, employees, successors, assigns and agents from any and all claims, expense, loss, damages, or injury; and the County, in its discretion, may require the Contractor to furnish a surety bond satisfactory to the County providing for such protection and indemnity, which bond shall be furnished by the Contractor within five (5) days after written demand has been made therefore. The expense of said Bond shall be borne by the Contractor. **[See General Conditions for similar provisions]**

This Contract constitutes the full agreement between the parties, and the Contractor shall not sublet, assign, transfer, pledge, convey, sell or otherwise dispose of the whole or any part of this Contract or his right, title, or interest therein to any person, firm or corporation without the previous consent of the County in writing. Subject to applicable provisions of law, this Contract shall be in full force and effect as a Contract, from the date on which a fully executed and approved counterpart hereof is delivered to the Contractor and shall remain and continue in full force and effect until after the expiration of any guarantee period and the Contractor and his sureties are finally released by the County.

This agreement was approved by the Fulton County Board of Commissioner on [Insert approval date and item number].

[SIGNATURES NEXT PAGE]

IN WITNESS THEREOF, the Parties hereto have caused this Contract to be executed by their duly authorized representatives as attested and witnessed and their corporate seals to be hereunto affixed as of the day and year date first above written.

OWNER:

FULTON COUNTY, GEORGIA

John H. Eaves, Commission Chair
Board of Commissioners

ATTEST:

Mark Massey
Clerk to the Commission (Seal)

APPROVED AS TO FORM:

Office of the County Attorney

APPROVED AS TO CONTENT:

[Insert Department Head Name]
[Insert Department Head Title]

CONTRACTOR:

[Insert Contractor COMPANY NAME]

[Insert Name & Title of person authorized to sign contract]

ATTEST:

Secretary/
Assistant Secretary

(Affix Corporate Seal)

END OF SECTION

PERFORMANCE BOND

No contract with Fulton County for work to be done shall be valid for any purpose unless the Contractor provides a Performance Bond with good and sufficient surety payable to, in favor of, and for the protection of Fulton County. The Performance Bond shall be in the amount of 100% of the total contract amount, payable by the terms of the Contract, and shall be written on the following form.

Surety companies executing Bonds must appear on the Treasury Department's most current list (Circular 570 as amended) and be authorized to transact business as a surety in Georgia.

Attestation for the corporation must be by the corporate officer; for a partnership by another partner; for an individual by a notary with the corporate seal.

PERFORMANCE BOND

KNOW ALL MEN BY THESE PRESENTS that _____
(Insert name of Contractor)
(hereinafter called the "Principal") and _____(hereinafter called the
(Insert name of Surety)
"Surety"), are held and firmly bound unto **FULTON COUNTY**, a political subdivision of the State of Georgia (hereinafter called the "Owner"), its successors and assigns, in the penal sum of _____*[100% of Contract amount]*, lawful money of the United States of America, for the payment of which the Principal and the Surety bind themselves, their administrators, executors, successors and assigns, jointly and severally, firmly by these presents.

WHEREAS, the Principal has entered, or is about to enter, into a certain written contract with the Owner, dated _____, which is incorporated herein by reference in its entirety (hereinafter called the "Contract"), for construction-type services of a project known as **Fulton County Juvenile Court Building Entrance Security Renovation**, as more particularly described in the Contract (hereinafter called the "Project");

NOW, THEREFORE, the conditions of this obligation are as follows, that if the Principal shall fully and completely perform all the undertakings, covenants, terms, conditions, warranties, and guarantees contained in the Contract, including all modifications, amendments, changes, deletions, additions, and alterations thereto that may hereafter be made, then this obligation shall be void; otherwise it shall remain in full force and effect.

Whenever the Principal shall be, and declared by the Owner to be, in default under the Construction-Type Contract, the Surety shall promptly remedy the default as follows:

1. Complete the Contract in accordance with its terms and conditions; or, at the sole option of the Owner,

2. Obtain a bid or bids for completing the Contract in accordance with its terms and conditions, and upon determination by the Surety and the Owner of the lowest responsible bidder, arrange for a contract between such bidder and Owner and make available as the work progresses (even though there should be a default or succession of defaults under the Contract or contracts of completion arranged under this paragraph) sufficient funds to pay the cost of completion less the balance of the contract price; but not exceeding, including other costs and damages for which the Surety may be liable hereunder, the penal sum set forth in the first paragraph hereof, as may be adjusted, and the Surety shall make available and pay to the Owner the funds required by this Paragraph prior to the payment of the Owner of the balance of the contract price, or any portion thereof. The term "balance of the contract price," as used in this paragraph, shall mean the total amount payable by the Owner to the Contractor under the Contract, and any amendments thereto, less the amount paid by the Owner to the Contractor; or, at the sole option of the Owner,

3. Allow Owner to complete the work and reimburse the Owner for all reasonable costs incurred in completing the work.

In addition to performing as required in the above paragraphs, the Surety shall indemnify and hold harmless the Owner from any and all losses, liability and damages, claims, judgments, liens, costs and fees of every description, including reasonable attorney's fees, litigation costs and expert witness fees, which the Owner may incur, sustain or suffer by reason of the failure or default on the part of the Principal in the performance of any or all of the terms, provisions, and requirements of the Contract, including any and all amendments and modifications thereto, or

incurred by the Owner in making good any such failure of performance on the part of the Principal.

The Surety shall commence performance of its obligations and undertakings under this Bond promptly and without delay, after written notice from the Owner to the Surety.

The Surety hereby waives notice of any and all modifications, omissions, additions, changes, alterations, extensions of time, changes in payment terms, and any other amendments in or about the Contract, and agrees that the obligations undertaken by this Bond shall not be impaired in any manner by reason of any such modifications, omissions, additions, changes, alterations, extensions of time, change in payment terms, and amendments.

The Surety hereby agrees that this Bond shall be deemed amended automatically and immediately, without formal or separate amendments hereto, upon any amendment to the Contract, so as to bind the Principal and the Surety to the full and faithful performance of the Contract as so amended or modified, and so as to increase the penal sum to the adjusted Contract Price of the Contract.

No right of action shall accrue on this Bond to or for the use of any person, entity or corporation other than the Owner and any other obligee named herein, or their executors, administrators, successors or assigns.

This Bond is intended to comply with O.C.G.A. Section 36-91-1 et seq., and shall be interpreted so; as to comply with; the minimum requirements thereof. However, in the event the express language of this Bond extends protection to; the Owner beyond that contemplated by O.C.G.A. Section 36-91-1 et seq. and O.C.G.A. Section 13-10-1, as amended, or any other statutory law applicable to this Project, then the additional protection shall be enforced in favor of the Owner, whether or not such protection is found in the applicable statutes.

IN WITNESS WHEREOF the undersigned have caused this instrument to be executed and their respective corporate seals to be affixed and attested by their duly authorized representatives this _____ day of _____, _____.

_____(SEAL)
(Principal)

By:_____

Attest:

_____
Secretary

_____(SEAL)
(Surety)

By:_____

Attest:

_____
Secretary

_____
(Address of Surety's Home Office)

_____
(Resident Agent of Surety)

END OF SECTION

PAYMENT BOND

No Contract with Fulton County for work to be done shall be valid for any purpose unless the Contractor provides a Payment Bond with good and sufficient surety payable to Fulton County for the use and protection of all sub-contractors and all persons supplying labor, materials, machinery, and equipment in the prosecution of the work provided for in the Contract. The Payment Bond shall be in the amount of 100% of the total contract amount, payable by the terms of the Contract, and shall be written on the following form.

Surety companies executing Bonds must appear on the Treasury Department's most current list (Circular 570 as amended) and be authorized to transact business in the State of Georgia.

Attestation for the corporation must be by the corporate officer; for a partnership by another partner; for an individual by a notary with the corporate seal.

PAYMENT BOND

KNOW ALL MEN BY THESE PRESENTS that _____ *(Insert name of Contractor)* (Hereinafter called the "Principal") and _____ *(Insert name of Surety)* (hereinafter called the "Surety"), are held and firmly bound unto **FULTON COUNTY**, a political subdivision of the State of Georgia (hereinafter called the "Owner"), its successors and assigns as obligee, in the penal sum of _____ *[100% of Contract amount]*, lawful money of the United States of America, for the payment of which the Principal and the Surety bind themselves, their administrators, executors, successors and assigns, jointly and severally, firmly by these presents.

WHEREAS, the Principal has entered, or is about to enter, into a certain written contract with the Owner, dated _____, which is incorporated herein by reference in its entirety (hereinafter called the "Contract"), for construction-type services of a project known as **Fulton County Juvenile Court Building Entrance Security Renovation**, as more particularly described in the Contract (hereinafter called the "Project");

NOW, THEREFORE, the condition of this obligation is such that if the Principal shall promptly make payment to all persons working on or supplying labor or materials under the Contract, and any amendments thereto, with regard to labor or materials furnished and used in the Project, and with regard to labor or materials furnished but not so used, then this obligation shall be void; but otherwise it shall remain in full force and effect.

1. A "Claimant' shall be defined herein as any subcontractor, person, party, partnership, corporation or the entity furnishing labor, services or materials used, or reasonably required for use, in the performance of the Contract, without regard to whether such labor, services or materials were sold, leased or rented, and without regard to whether such Claimant is or is not in privity of contract with the Principal or any subcontractor performing work on the Project, including, but not limited to, the following labor, services, or materials: water, gas, power, light, heat, oil, gasoline, telephone service or rental of equipment directly applicable to the Contract.

2. In the event a Claimant files a lien against the property of the Owner, and the Principal fails or refuses to satisfy or remove it promptly, the Surety shall satisfy or remove the lien promptly upon written notice from the Owner, either by bond or as otherwise provided in the Contract.

3. The Surety hereby waives notice of any and all modifications, omissions, additions, changes, alterations, extensions of time, changes in the payment terms, and any other amendments in or about the Contract and agrees that the obligations undertaken by this Bond shall not be impaired in any manner by reason of any such modifications, omissions, additions, changes, alterations, extensions of time, changes in payment terms, and amendments.

4. The Surety hereby agrees that this Bond shall be deemed amended automatically and immediately, without formal or separate amendments hereto, upon any amendment or modifications to the Contract, so as to bind the Principal and Surety, jointly and severally, to the full payment of any Claimant under the Contract, as amended or modified, provided only that the Surety shall not be liable for more than the penal sum of the Bond, as specified in the first paragraph hereof.

5. This Bond is made for the use and benefit of all persons, firms, and corporations who or which may furnish any materials or perform any labor for or on account of the

construction-type services to be performed or supplied under the Contract, and any amendments thereto, and they and each of them may sue hereon.

6. No action may be maintained on this Bond after one (1) year from the date the last services, labor, or materials were provided under the Contract by the Claimant prosecuting said action.

7. This Bond is intended to comply with O.C.G.A. Section 13-10-1, and shall be interpreted so as to comply with the minimum requirements thereof. However, in the event the express language of this Bond extends protection to the Owner beyond that contemplated by O.C.G.A. Section 13-10-1, or any other statutory law applicable to this Project, then the additional protection shall be enforced in favor of the Owner, whether or not such protection is found in the applicable statutes.

IN WITNESS WHEREOF the undersigned have caused this instrument to be executed and their respective corporate seals to be affixed and attested by their duly authorized representatives this _____ day of _____, _____.

_____(SEAL)
(Principal)

By:_____

Attest:

_____
Secretary

_____(SEAL)
(Surety)

By:_____

Attest:

_____
Secretary

_____
(Address of Surety's Home Office)

_____
(Resident Agent of Surety)

END OF SECTION

GENERAL CONDITIONS

00700-1 FAMILIARITY WITH SITE

Execution of this agreement by the Contractor is a representation that the Contractor has visited the site, has become familiar with the local conditions under which the work is to be performed, and has correlated personal observations with the requirements of this agreement.

00700-2 CONTRACT DOCUMENTS

This agreement consists of Owner's invitation for bid, instructions to bidders, bid form, performance bond, payment bond, acknowledgments, the contract, general conditions, special conditions, specifications, plans, drawings, exhibits, addenda, and written change orders.

A. Notice of Award of Contract:

B. Execution of Contract Documents

Upon notification of Award of Contract, the Owner shall furnish the Contractor the conformed copies of Contract Documents for execution by the Contractor and the Contractor's surety.

Within ten (10) days after receipt the Contractor shall return all the documents properly executed by the Contractor and the Contractor's surety. Attached to each document shall be an original power-of-attorney for the person executing the bonds for the surety and certificates of insurance for the required insurance coverage.

After receipt of the documents executed by the Contractor and his surety with the power-of-attorney and certificates of insurance, the Owner shall complete the execution of the documents. Distribution of the completed documents will be made upon completion.

Should the Contractor and/or Surety fail to execute the documents within the time specified; the Owner shall have the right to proceed on the Bid Bond accompanying the bid.

If the Owner fails to execute the documents within the time limit specified, the Contractor shall have the right to withdraw the Contractor's bid without penalty.

Drawings and Specifications:

The Drawings, Specifications, Contract Documents, and all supplemental documents, are considered essential parts of the Contract, and requirements occurring in one are as binding as though occurring in all. They are intended to define, describe and provide for all Work necessary to complete the Project in an acceptable manner, ready for use, occupancy, or operation by the Owner.

In case of conflict between the Drawings and Specifications, the Specifications shall govern. Figure dimensions on Drawings shall govern over scale dimensions, and detailed Drawings shall govern over general Drawings.

In cases where products or quantities are omitted from the Specifications, the description and quantities shown on the Drawings shall govern.

Any ambiguities or need for clarification of the Drawings or Specifications shall be immediately reported to the Construction Manager in writing. Any such ambiguity or need for clarification shall be handled by the Construction Manager in writing. No clarification of the Drawings and Specifications hereunder by the Construction Manager shall entitle the Contractor to any additional monies unless a Change Order has been processed as provided by "Changes in the Contract" hereof.

Any work done by the Contractor following a discovery of such differing site condition or ambiguity or need for clarification in the Contract Drawings and Specifications prior to a written report to the Construction Manager shall not entitle the Contractor to additional monies and shall be done at the Contractor's risk.

The Construction Manager will furnish the Contractor five (5) copies of the Contract Drawings and the Specifications, one copy of which the Contractor shall have available at all times on the Project site.

00700-3 DEFINITIONS

The following terms as used in this agreement are defined as follows to the extent the definitions herein differ or conflict with those in the Instructions for Bidders, Section 00100, the definitions herein shall control.

Alternate bids – the amount stated in the bid or proposal to be added to or deducted from the amount of the base bid or base proposal if the corresponding change in project scope or alternate materials or methods of construction is accepted.

Base bid – the amount of money stated in the bid or proposal as the sum for which the bidder or proposer offers to perform the work.

Change Order - an alteration, addition, or deduction from the original scope of work as defined by the contract documents to address changes or unforeseen conditions necessary for project completion. A written order to the Contractor issued by the County pursuant to Fulton County Policy and Procedures 800-6 for changes in the work within the general scope of the contract documents, adjustment of the contract price, extension of the contract time, or reservation of determination of a time extension.

Construction Manager or **Engineer** shall mean Fulton Construction Management Partners, the County authorized representative for this project.

Contractor shall mean the party of the second part to the Contract Agreement or the authorized and legal representative of such party.

Contract Documents include the Contract Agreement, Contractor's Bid (including all documentation accompanying the Bid and any post-Bid documentation required by the County prior to the Notice of Award), Bonds, all Special Conditions, General Conditions, Supplementary Conditions, Specifications, Drawings and addenda, together with written amendments, change orders, field orders and the Construction Manager's written interpretations and clarifications issued in accordance with the General Conditions on or after the date of the Contract Agreement.

Shop drawing submittals reviewed in accordance with the General Conditions, geotechnical investigations and soils report and drawings of physical conditions in or relating to existing surface structures at or contiguous to the site are not Contract Documents.

Contract Price - The sum specified in the Agreement to be paid to the Contractor in consideration of the Work.

Contract Time shall mean the number of consecutive calendar days as provided in the Contract Agreement for completion of the Work, to be computed from the date of Notice to Proceed.

Owner or **County** shall mean Fulton County Government, party of the first part to the Contract Agreement, or its authorized and legal representatives.

Day - A calendar day of twenty-four hours lasting from midnight of one day to midnight the next day.

Design Consultant shall mean the firm or corporation responsible for the detailed design drawings and specifications.

Director - Director of the Facilities and Transportation Department of Fulton County, Georgia or the designee thereof.

Final Completion shall mean the completion of all work as required in accordance with the terms and conditions of the contract documents.

Liquidated Damages shall mean the amount, stated in the Contract Agreement, which the Contractor agrees to pay to the Owner for each consecutive calendar day beyond the Contract time required to complete the Project or for failing to comply with associated milestones. Liquidated Damages will end upon written notification from the Owner of Final Acceptance of the Project or upon written notification of from the Owner of completion of the milestone.

Notice to Proceed - A written communication issued by the County to the Contractor authorizing it to proceed with the work, establishing the date of commencement and completion of the work, and providing other direction to the Contractor.

Products shall mean materials or equipment permanently incorporated into the work.

Program Manager - Not used in this contract. Delete all references.

Project Manual - The Contract Documents.

Provide shall mean to furnish and install.

Substantial Completion - The date certified by the Construction Manager when all or a part of the work, as established pursuant to General Condition 0700-81, is sufficiently completed in accordance with the requirements of the contract documents so that the identified portion of the work can be utilized for the purposes for which it is intended.

Work or **Project** - All of the services specified, indicated, shown or contemplated by the contract documents, and furnishing by the Contractor of all materials, equipment, labor, methods, processes, construction and manufacturing materials and equipment, tools, plans, supplies, power, water, transportation and other things necessary to complete such services in accordance with the contract documents to insure a functional and complete facility.

00700-4 CODES

All codes, specifications, and standards referenced in the contract documents shall be the latest editions, amendments and revisions of such referenced standards in effect as of the date of the request for proposals for this contract.

00700-5 REVIEW OF CONTRACT DOCUMENTS

Before making its proposal to the County, and continuously after the execution of the agreement, the Contractor shall carefully study and compare the contract documents and shall at once report to the Construction Manager any error, ambiguity, inconsistency or omission that may be discovered, including any requirement which may be contrary to any law, ordinance, rule, or regulation of any public authority bearing on the performance of the work. By submitting its proposal, the Contractor agrees that the contract documents, along with any supplementary written instructions issued by or through the Construction Manager that have become a part of the contract documents, appear accurate, consistent and complete insofar as can be reasonably determined. If the Contractor has timely reported in writing any error, inconsistency, or omission to the Construction Manager, has properly stopped the affected work until instructed to proceed, and has otherwise followed the instructions of the Construction Manager, the Contractor shall not be liable to the County for any damage resulting from any such error, inconsistency, or omission in the contract documents. The Contractor shall not perform any portion of the work without the contract documents, approved plans, specifications, products and data, or samples for such portion of the work. For purposes of this section "timely" is defined as the time period in which the contractor discovers, or should have discovered, the error, inconsistency, or omission, with the exercise of reasonable diligence.

00700-6 STRICT COMPLIANCE

No observation, inspection, test or approval of the County or Construction Manager shall relieve the Contractor from its obligation to perform the work in strict conformity with the contract documents except as provided in General Condition 00700-48.

00700-7 APPLICABLE LAW

All applicable State laws, County ordinances, codes, and rules and regulations of all authorities having jurisdiction over the construction of the project shall apply to this agreement. The Contractor shall comply with the requirements of any Fulton County program concerning non-discrimination in contracting. All work performed within the right of way of the Georgia Department of Transportation and any railroad crossing shall be in accordance with Georgia Department of Transportation regulations, policies and procedures and, where applicable, those of any affected railroad. The Contractor shall comply with all laws, ordinances, codes, rules and regulations bearing on the conduct of the work as specified and the Contractor agrees to indemnify and hold harmless the County, its officers, agents and employees, as well as the Construction Manager and the Program Manager against any claim or liability arising from or based on the violation of any law, ordinance, regulation, order or decree affecting the conduct of the work, whether occasioned by the Contractor, his agents or employees.

00700-8 PERMITS, LICENSES AND BONDS

All permits and licenses necessary for the work shall be secured and paid for by the Contractor. If any permit, license or certificate expires or is revoked, terminated, or suspended as a result of any action on the part of the Contractor, the Contractor shall not be entitled to additional compensation or time. The Contractor shall obtain and keep in force at all times performance and payment bonds payable to Fulton County in penal amounts equal to 100% of the Contract price.

00700-9 TAXES

A. The Contractor shall pay all sales, retail, occupational, service, excise, old age benefit and unemployment compensation taxes, consumer, use and other similar taxes, as well as any other taxes or duties on the materials, equipment, and labor for the work provided by the Contractor which are legally enacted by any municipal, county, state or federal authority, department or agency at the time bids are received, whether or not yet effective. The Contractor shall maintain records pertaining to such taxes and levies as well as payment thereof and shall make the same available to the County at all reasonable times for inspection and copying. The Contractor shall apply for any and all tax exemptions which may be applicable and shall timely request from the County such documents and information as may be necessary to obtain such tax exemptions. The County shall have no liability to the Contractor for payment of any tax from which it is exempt.

B. The Contractor is obligated to comply with all local and State Sales and Use Tax laws. The Contractor shall provide the Owner with documentation to assist the Owner in obtaining sales and/or use tax refunds for eligible machinery and equipment used for the primary purpose of reducing or eliminating air or water pollution as provided for in Chapter 48-8-3 (36) and (37) of the Official Code of Georgia. All taxes shall be paid by the Contractor. All refunds will accrue to the Owner.

Acceptance of the project as complete and final payment will not be made by the Owner until the Contractor has fully complied with this requirement.

00700-10 DELINQUENT CONTRACTORS

The County shall not pay any claim, debt, demand or account whatsoever to any person firm or corporation who is in arrears to the County for taxes. The County shall be entitled to a counterclaim, back charge, and offset for any such debt in the amount of taxes in arrears, and no assignment or transfer of such debt after the taxes become due shall affect the right of the County to offset any taxes owed against said debt.

00700-11 LIEN WAIVERS

The Contractor shall furnish the County with evidence that all persons who have performed work or furnished materials pursuant to this agreement have been paid in full prior to submitting its demand for final payment pursuant to this agreement. A final affidavit, Exhibit A, must be completed, and submitted to comply with requirements of 00700-11. In the event that such evidence is not furnished, the County may retain sufficient sums necessary to meet all lawful claims of such laborers and material men. The County assumes no obligation nor in any way undertakes to pay such lawful claims from any funds due or that may become due to the Contractor.

00700-12 MEASUREMENT

All items of work to be paid for per unit of measurement shall be subject to inspection, measurement, and confirmation by the Construction Manager.

00700-13 ASSIGNMENT

The Contractor shall not assign any portion of this agreement or moneys due there from (include factoring of receivables) without the prior written consent of the County. The Contractor shall retain personal control and shall provide personal attention to the fulfillment of its obligations pursuant to this agreement. Any assignment without the express written consent of the County shall render this contract voidable at the sole option of the County.

00700-14 FOREIGN CONTRACTORS

In the event that the Contractor is a foreign corporation, partnership, or sole proprietorship, the Contractor hereby irrevocably appoints the Secretary of State of Georgia as its agent for service of all legal process for the purpose of this contract only.

00700-15 INDEMNIFICATION [there are two indemnification clauses, the other is in the Contract Cover Sheet]

The Contractor hereby assumes the entire responsibility and liability for any and all injury to or death of any and all persons, including the Contractor's agents, servants, and employees, and in addition thereto, for any and all damages to property caused by or resulting from or arising out of any act or omission in connection with this contract or the prosecution of work hereunder, whether caused by the Contractor or the Contractor's agents, servants, or employees, or by any of the Contractor's subcontractors or suppliers, and the Contractor shall indemnify and hold harmless the County, the Construction Manager and the Program Manager, or any of their subcontractors from and against any and all loss and/or expense which they or any of them may suffer or pay as a result of claims or suits due to, because of, or arising out of any and all such injuries, deaths and/or damage, irrespective of County or Construction Manager or Program Manager negligence (except that no party shall be indemnified for their own sole negligence). The Contractor, if requested, shall assume and defend at the Contractor's own expense, any suit, action or other legal proceedings arising there from, and the Contractor hereby agrees to satisfy,

pay, and cause to be discharged of record any judgment which may be rendered against the County, the Construction Manager and the Program Manager arising there from.

In the event of any such loss, expense, damage, or injury, or if any claim or demand for damages as heretofore set forth is made against the County or the Construction Manager or the Program Manager, the County may withhold from any payment due or thereafter to become due to the Contractor under the terms of this Contract, an amount sufficient in its judgment to protect and indemnify it and the Construction Manager and the Program Manager from any and all claims, expense, loss, damages, or injury; and the County, in its discretion, may require the Contractor to furnish a surety bond satisfactory to the County providing for such protection and indemnity, which bond shall be furnished by the Contractor within five (5) days after written demand has been made therefore. The expense of said Bond shall be borne by the Contractor.

00700-16 SUPERVISION OF WORK AND COORDINATION WITH OTHERS

The Contractor shall supervise and direct the work using the Contractor's best skill and attention. The Contractor shall be solely responsible for all construction methods and procedures and shall coordinate all portions of the work pursuant to the contract subject to the overall coordination of the Construction Manager. All work pursuant to this agreement shall be performed in a skillful and workmanlike manner.

The County reserves the right to perform work related to the Project with the County's own forces and to award separate contracts in connection with other portions of the project, other work on the site under these or similar conditions of the contract, or work which has been extracted from the Contractor's work by the County.

When separate contracts are awarded for different portions of the project or other work on the site, the term "separate contractor" in the Contract Documents in each case shall mean the contractor who executes each separate County Agreement.

The Contractor shall cooperate with the County and separate contractors in arranging the introduction and storage of materials and equipment and execution of their work, and shall cooperate in coordinating connection of its work with theirs as required by the Contract Documents.

If any part of the Contractor's Work depends for proper execution or results upon the work of the County or any separate contractor, the Contractor shall, prior to proceeding with that portion of the Work, promptly report to the Construction Manager any apparent discrepancies or defects in such other work that render it unsuitable for such proper execution and results **within fourteen (14) days** of discovery of such discrepancy or defect. Failure of the Contractor to so report in writing shall constitute an acceptance of the County's or separate contractor's work as fit and proper to receive the Work, except as to any defects which may subsequently become apparent in such work by others.

Any costs caused by defective or untimely work shall be borne by the party responsible therefore.

Should the Contractor wrongfully cause damage to the work or property of the County or to other work or property on the site, including the work of separate contractors, the Contractor shall promptly remedy such damage at the Contractor's expense.

Should the Contractor be caused damage by any other contractor on the Project, by reason of such other contractor's failure to perform properly his contract with the County, no action shall lie against the County or the Construction Manager inasmuch as the parties to this agreement are the only beneficiaries hereof and there are no third party beneficiaries and neither the County nor the Construction Manager shall have liabilities therefore, but the Contractor may assert his claim for damages solely against such other contractor. The Contractor shall not be excused from performance of the contract by reason of any dispute as to damages with any other contractor or third party.

Where the Work of this Contract shall be performed concurrently in the same areas as other construction work, the Contractor shall coordinate with the Construction Manager and the separate contractors in establishing mutually acceptable schedules and procedures that shall permit all jobs to proceed with minimum interference.

If a dispute arises between the Contractor and separate contractors as to their responsibility for cleaning up, the County may clean up and charge the cost thereof to the Contractor or contractors responsible therefore as the County shall determine to be just.

00700-17 ADMINISTRATION OF CONTRACT

The Program Manager and the Construction Manager shall provide administration services as hereinafter described.

For the administration of this Contract, the Construction Manager shall serve as the County's primary representative during design and construction and until final payment to the Contractor is due. The Construction Manager shall advise and consult with the County and the Program Manager. The primary point of contact for the Contractor shall be the Construction Manager. All correspondence from the Contractor to the County shall be forwarded through the Construction Manager. Likewise, all correspondence and instructions to the Contractor shall be forwarded through the Construction Manager.

The Construction Manager will determine in general that the construction is being performed in accordance with design and engineering requirements, and will endeavor to guard the County against defects and deficiencies in the Work.

The Construction Manager will not be responsible for or have control or charge of construction means, methods, techniques, sequences, or procedures, or for safety precautions and programs in connection with the Work, nor will it be responsible for the Contractor's failure to carry out the Work in accordance with the Contract Documents. The Construction Manager will not be responsible for or have control or charge over the acts or omissions of the Contractor, its engineers, consultants, subcontractors, or any of their agents or employees, or any other persons performing the Work.

Based on the Construction Manager's observations regarding the Contractor's Applications for Payment, the Construction Manager shall determine the amounts owing to the Contractor, in accordance with the payment terms of the Contract, and shall issue Certificates for Payment in such amount to the County.

The Construction Manager shall render interpretations necessary for the proper execution or progress of the Work. Either party to the Contract may make written requests to the Construction Manager for such interpretations.

Claims, disputes and other matters in question between the Contractor and the County relating to the progress of the Work or the interpretation of the Contract Documents shall be referred to the Construction Manager for interpretation.

All interpretations of the Construction Manager shall be consistent with the intent of and reasonably inferable from the Contract Documents and shall be in writing or in graphic form.

Except as otherwise provided in this Contract, the Construction Manager shall issue a decision on any disagreement concerning a question of fact arising under this Contract. The Construction Manager shall reduce the decision to writing and mail or otherwise furnish a copy thereof to the Contractor. The decision of the Construction Manager shall be final and conclusive unless, within thirty (30) days from the date of receipt of such copy, the Contractor files a written appeal with the Director of Public Works and mails or otherwise furnishes the Construction Manager a copy of such appeal. The decision of the Director of Public Works or the Director's duly authorized representative for the determination of such appeals shall be final and conclusive. Such final decision shall not be pleaded in any suit involving a question of fact arising under this Contract, provided such is not fraudulent, capricious, arbitrary, so grossly erroneous as necessarily

implying bad faith, or is not supported by substantial evidence. In connection with any appeal proceeding under this Article, the Contractor shall be afforded an opportunity to be heard and to offer evidence in support of Contractor's appeal. Pending any final decision of a dispute hereunder, the Contractor shall proceed diligently with the performance of the Contract as directed by the Construction Manager.

The Construction Manager shall have authority to reject Work which does not conform to the Contract Documents. Whenever, in the Construction Manager's opinion, it is considered necessary or advisable for the implementation of the intent of the Contract Documents, the County shall have authority to require special inspection or testing of the Work whether or not such Work be then fabricated, installed or completed. The Contractor shall pay for such special inspection or testing if the Work so inspected or tested is found not to comply with the requirements of the contract; the County shall pay for special inspection and testing if the Work is found to comply with the contract. Neither the Construction Manager's authority to act under this Subparagraph, nor any decision made by the Construction Manager in good faith either to exercise or not to exercise such authority, shall give rise to any duty or responsibility of the Construction Manager to the Contractor, any subcontractor, any of their agents or employees, or any other person performing any of the Work.

The Contractor shall provide such shop drawings, product data, and samples as may be required by the Construction Manager and/or as required by these Contract Documents.

The Construction Manager shall conduct inspections to determine Substantial Completion and Final Completion, and shall receive and forward to the County for review written warranties and related documents required by the Contract Documents and assembled by the Contractor. The Construction Manager shall approve and issue Certificates for Payment upon compliance with Substantial and Final Completion requirements indicated in General Conditions 00700-81, 00700-82, 00700-84 and 00700-85 of this Agreement.

Except as provided in General Condition 00700-48, the Contractor shall not be relieved from the Contractor's obligations to perform the work in accordance with the contract documents by the activities or duties of the County or any of its officers, employees, or agents, including inspections, tests or approvals, required or performed pursuant to this agreement.

00700-18 RESPONSIBILITY FOR ACTS OF EMPLOYEES

The Contractor shall employ only competent and skilled personnel. The Contractor shall, upon demand from the Construction Manager, immediately remove any superintendent, foreman or workman whom the Construction Manager may consider incompetent or undesirable.

The Contractor shall be responsible to the County for the acts and omissions of the Contractor's employees, subcontractors, and agents as well as any other persons performing work pursuant to this agreement for the Contractor.

00700-19 LABOR, MATERIALS, SUPPLIES, AND EQUIPMENT

Unless otherwise provided in this agreement, the Contractor shall make all arrangements with necessary support agencies and utility companies provide and pay for all labor, materials, equipment, tools, construction equipment and machinery, water, heat, utilities, transportation, and other facilities and services necessary for the execution and completion of the work.

00700-20 DISCIPLINE ON WORK SITE

The Contractor shall enforce strict discipline and good order among its employees and subcontractors at all times during the performance of the work, to include compliance with the Fulton County Drug Free Work Place Policy. The Contractor shall not employ any subcontractor who is not skilled in the task assigned to it. The Construction Manager may, by written notice,

require the Contractor to remove from the work any subcontractor or employee deemed by the Construction Manager to be incompetent.

00700-21 HOURS OF OPERATION

All work at the construction site shall be performed during regular business hours of the Fulton County government, except upon the Construction Manager's prior written consent to other work hours. It is further understood that the Contractor's construction schedule is based on a normal 40 hours, five day work week, less Fulton County-recognized holidays. Contractors work schedule shall not violate Fulton County Noise Ordinance by working hours inconsistent with the Fulton County Noise Ordinance. The County's current noise ordinance or other applicable ordinance shall govern. If the Contractor desires to work in excess of this limit, the Contractor shall submit a written request to the Construction Manager, a minimum of five days prior to the desired work date. The Contractor shall be responsible for any additional expenses incurred by the Owner as a result of the extended work hours, including resident inspection overtime. The cost associated with resident inspector overtime shall be deducted form the Contractor monthly payment request.

00700-22 FAMILIARITY WITH WORK CONDITIONS

The Contractor shall take all steps necessary to ascertain the nature and location of the work and the general and local conditions which may affect the work or the cost thereof. The Contractor's failure to fully acquaint itself with the conditions which may affect the work, including, but not limited to conditions relating to transportation, handling, storage of materials, availability of utilities, labor, water, roads, weather, topographic and subsurface conditions, other separate contracts to be entered into by the County relating to the project which may affect the work of the Contractor, applicable provisions of law, and the character and availability of equipment and facilities necessary prior to and during the performance of the work shall not relieve the Contractor of its responsibilities pursuant to this agreement and shall not constitute a basis for an equitable adjustment of the contract terms. The County reserves the right to perform with its own forces or to contract with other entities for other portions of the project work, in which case the Contractor's responsibility to assure its familiarity with work conditions hereunder shall include all coordination with such other contractors and the County necessary to insure that there is no interference between contractors as will delay or hinder any contractor in its prosecution of work on the project. The County assumes no responsibility for any understandings or representations concerning conditions of the work made by any of its officers, agents, or employees prior to the execution of this agreement.

00700-23 RIGHT OF ENTRY

The County reserves the right to enter the site of the work by such agent, including the Construction Manager, as it may elect for the purpose of inspecting the work or installing such collateral work as the County may desire. The Contractor shall provide safe facilities for such access so that the County and its agents may perform their functions.

00700-24 NOTICES

Any notice, order, instruction, claim or other written communication required pursuant to this agreement shall be deemed to have been delivered or received as follows:

Upon personal delivery to the Contractor, its authorized representative, or the Construction Manager on behalf of the County. Personal delivery may be accomplished by in-person hand delivery or bona fide overnight express service.

Three days after depositing in the United States mail a certified letter addressed to the Contractor or the Construction Manager for the County. For purposes of mailed notices, the County's mailing address shall be 141 Pryor Street, 6th Floor, Atlanta, Georgia 30303, or as the County shall have otherwise notified the Contractor. The Contractor's mailing address shall be the address stated in its proposal or as it shall have most recently notified the Construction Manager in writing.

00700-25 SAFETY

A. SAFETY, HEALTH AND LOSS PREVENTION

The Contractor shall be responsible for implementing a comprehensive project-specific safety, health and loss prevention program and employee substance abuse program for this project. All Sub-Contractors must either implement their own program or follow the Contractor's safety, health and loss prevention program and employee substance abuse program.

The Contractor's safety, health and loss prevention program and employee substance abuse program must meet or exceed all governmental regulations (OSHA, EPA, DOT, State, local), and any other specific Fulton County requirements

B. COUNTY'S SAFETY, HEALTH, AND LOSS PREVENTION PROCESS GUIDELINES AND REQUIREMENTS

The County and its agents reserve the right, but assume no duty, to establish and enforce safety, health, and loss prevention guidelines and to make the appropriate changes in the guidelines, for the protection of persons and property and to review the efficiency of all protective measures taken by the Contractor. The Contractor shall comply with all safety, health, and loss prevention process guidelines and requirements and changes made by the County or its agent(s). The issuance of any such guidelines or changes by the County or its agent(s) shall not relieve the Contractor of its duties and responsibilities under this Agreement, and the County or its agent(s) shall not thereby assume, nor be deemed to have assumed, any such duties or responsibilities of the Contractor.

C. COMPLIANCE OF WORK, EQUIPMENT, AND PROCEDURES WITH ALL APPLICABLE LAWS and REGULATIONS

All Work, whether performed by the Contractor or its Sub-Contractors of any tier, or anyone directly or indirectly employed by any of them, and all equipment, appliances, machinery, materials, tools and like items incorporated or used in the Work, shall be in compliance with and conform to:

1. All applicable laws, ordinances, rules, regulations and orders of any public, quasi-public or other governmental authority relating to the safety of persons and their protection against injury, specifically including, but in no event limited to, the Federal Occupational Safety and Health Act of 1970, as amended, and all rules and regulations now or hereafter in effect pursuant to said Act.

2. All rules, regulations, and requirements of the County or its agent(s) and its insurance carriers relating there to. In the event of a conflict or differing requirements the more stringent shall govern.

D. PROTECTION OF THE WORK

1. The Contractor shall, throughout the performance of the Work, maintain adequate and continuous protection of all Work and temporary facilities against loss or damage from whatever cause, shall protect the property of the County and third parties from loss or damage from whatever cause arising out of the performance of the Work, and shall comply with the requirements of the County

or its agent(s) and its insurance carriers, and with all applicable laws, codes, rules and regulations, (as same may be amended) with respect to the prevention of loss or damage to property as a result of fire or other hazards.

2. The County or its agent(s) may, but shall not be required to, make periodic inspections of the Project work area. In such event, however, the Contractor shall not be relieved of its aforesaid responsibilities and the County or its agent(s) shall not assume, nor shall it be deemed to have assumed, any responsibility otherwise imposed upon the assurance of Contractor by this Agreement.

E. SAFETY EQUIPMENT

1. The Contractor shall provide to each worker on the Project work area the proper safety equipment for the duties being performed by that worker and will not permit any worker on the Project work area who fails or refuses to use the same. The County or its agent shall have the right, but not the obligation, to order the removal of a worker from the Project work site for his/her failure to comply with safe practices or substance abuse policies.

F. EMERGENCIES

1. In any emergency affecting the safety of persons or property, or in the event of a claimed violation of any federal or state safety or health law or regulation, arising out of or in any way connected with the Work or its performance, the Contractor shall act immediately to prevent threatened damage, injury or loss and to remedy said violation. Failing such action the County or its agent(s) may immediately take whatever steps it deems necessary including, but not limited to, suspending the Work as provided in this Agreement.

2. The County or its agent(s) may offset any and all costs or expenses of whatever nature, including attorneys' fees, paid or incurred by the County or its agent(s) (whether such fees are for in-house counsel or counsel retained by the County or its agent), in taking the steps authorized by Section 00700-25(G) (1) above against any sums then or thereafter due to the Contractor. The Contractor shall defend, indemnify and hold the County, its officers, agents, and employees harmless against any and all costs or expenses caused by or arising from the exercise by the County of its authority to act in an emergency as set out herein. If the Contractor shall be entitled to any additional compensation or extension of time change order on account of emergency work not due to the fault or neglect of the Contractor or its Sub-Contractors, such additional compensation or extension of time shall be determined in accordance with General Condition 00700-52 and General Condition 00700-87 of this Agreement.

G. SUSPENSION OF THE WORK

1. Should, in the judgment of the County or its agent(s), the Contractor or any Sub-Contractor fail to provide a safe and healthy work place, the County or its agent shall have the right, but not the obligation, to suspend work in the unsafe areas until deficiencies are corrected. All costs of any nature (including, without limitation, overtime pay, liquidated damages or other costs arising out of delays) resulting from the suspension, by whomsoever incurred, shall be borne by the Contractor.

2. Should the Contractor or any Sub-Contractor fail to provide a safe and healthy work place after being formally notified in writing by the County or its agents of such non-compliance, the contract may be terminated following the termination provision of the contract.

H. CONTRACTOR'S INDEMNITY OF THE COUNTY FOR CONTRACTOR'S NON-COMPLIANCE WITH SAFETY PROGRAM

1. The Contractor recognizes that it has sole responsibility to assure its Safety Program is implemented and to assure its construction services are safely provided. The Contractor shall indemnify, defend and hold the County and its agents harmless, from and against any and all liability (whether public or private), penalties (contractual or otherwise), losses, damages, costs, attorneys' fees, expenses, causes of action, claims or judgments resulting, either in whole or in part, from any failure of the Contractor, its Sub-Contractors of any tier or anyone directly or indirectly employed by any of them or for whose acts any of them may be liable, to comply with the safety requirements of the contract. The Contractor shall not be relieved of its responsibilities under the safety requirements of the Contract should the County or its agent(s) act or fail to act pursuant to its rights hereunder.

2. The Contractor shall not raise as a defense to its obligation to indemnify under this Subparagraph I any failure of those indemnified hereunder to assure Contractor operates safely, it being understood and agreed that no such failure shall relieve the Contractor from its obligation to assure safe operations or from its obligation to so indemnify. The Contractor also hereby waives any rights it may have to seek contribution, either directly or indirectly, from those indemnified hereunder.

3. In any and all claims against those indemnified hereunder by any employee of the Contractor, any Sub-Contractor of any tier or anyone directly or indirectly employed by any of them or anyone for whose acts any of them may be liable, the indemnification obligation under this Subparagraph I shall not be limited in any way as to the amount or type of damages, compensation or benefits payable by or for the Contractor or any Sub-Contractor of any tier under any workers' compensation act, disability benefit or other employee benefit acts.

00700-26 BLASTING AND EXCAVATION

The Contractor acknowledges that it is fully aware of the contents and requirements of O.C.G.A. § 25-9-1 through 25-9-12 concerning blasting and excavation near underground gas pipes and facilities and shall fully comply therewith.

00700-27 HIGH VOLTAGE LINES

The Contractor acknowledges that it is fully aware of the contents and requirements O.C.G.A. § 46-3-30 through 46-3-39 concerning safeguards against contact with high voltage lines, and the Contractor shall fully comply with said provisions.

00700-28 SCAFFOLDING AND STAGING

The Contractor acknowledges that it is the person responsible for employing and directing others to perform labor within the meaning of O.C.G.A. § 34-1-1 and agrees to comply with said provisions.

00700-29 CLEAN-UP

The Contractor shall clean up all refuse, rubbish, scrap materials, and debris caused by its operations to the end that the site of the work shall present a neat, orderly and workmanlike appearance at all times.

00700-30 PROTECTION OF WORK

The Contractor shall be responsible for maintenance and protection of the work, which shall include any County-furnished supplies, material, equipment, until final completion of this agreement and acceptance of the work as defined herein. Any portion of the work suffering injury, damage or loss shall be considered defective and shall be corrected or replaced by the Contractor without additional cost to the County.

00700-31 REJECTED WORK

The Contractor shall promptly remove from the project all work rejected by the Construction Manager for failure to comply with the contract documents and the Contractor shall promptly replace and re-execute the work in accordance with the contract documents and without expense to the County. The Contractor shall also bear the expense of making good all work of other Contractors destroyed or damaged by such removal or replacement.

00700-32 DEFECTIVE WORK

If the Contractor defaults or neglects to carry out any portion of the work in accordance with the contract documents, and fails within three days after receipt of written notice from the Construction Manager to commence and continue correction of such default or neglect with diligence and promptness, the County may, after three days following receipt by the Contractor of an additional written notice and without prejudice to any other remedy the County may have, make good such deficiencies and complete all or any portion of any work through such means as the County may select, including the use of a separate Contractor. In such case, an appropriate change order shall be issued deducting from the payments then or thereafter due the Contractor the cost of correcting such deficiencies. In the event the payments then or thereafter due the Contractor are not sufficient to cover such amount, the Contractor shall pay the difference to the County on demand.

The County may, at its option, accept defective or nonconforming work instead of requiring its removal or correction. In such case, a change order shall be issued reducing the price due the contractor to the extent appropriate and equitable. Such contract price adjustment shall be effected whether or not final payment has been made.

00700-33 WARRANTY OF NEW MATERIALS

The Contractor warrants to the County that all materials and equipment furnished under this contract will be new unless otherwise specified, and the Contractor further warrants that all work will be of good quality, free from faults and defects, and in conformance with the contract documents. The warranty set forth in this paragraph shall survive final acceptance of the work.

00700-34 CONTRACTOR'S WARRANTY OF THE WORK

If within one year after the date of issuance of the certificate of final payment pursuant to General Condition 84, or within such longer period of time as may be prescribed by law or by the term of any applicable special warranty required by the contract documents, any of the work is found to be defective or not in accordance with the contract documents, the Contractor shall correct such work promptly after receipt of written notice from the Construction Manager to do so. This obligation shall survive both final payment for the work and termination of the contract.

00700-35 ASSIGNMENT OF MANUFACTURERS' WARRANTIES

Without limiting the responsibility or liability of the Contractor pursuant to this agreement, all warranties given by manufacturers on materials or equipment incorporated in the work are hereby assigned by the Contractor to the County. If requested, the Contractor shall execute formal assignments of said manufacturer's warranties to the County. All such warranties shall be directly enforceable by the County.

00700-36 WARRANTIES IMPLIED BY LAW

The warranties contained in this agreement, as well as those warranties implied by law, shall be deemed cumulative and shall not be deemed alternative or exclusive. No one or more of the warranties contained herein shall be deemed to alter or limit any other.

00700-37 STOP WORK ORDERS

In the event that the Contractor fails to correct defective work as required by the contract documents or fails to carry out the work in accordance with contract documents, the Construction Manager, in writing, may order the Contractor to stop work until the cause for such order has been eliminated. This right of the County to stop work shall not give rise to any duty on the part of the County or the Construction Manager to execute this right for the benefit of the Contractor or for any other person or entity.

00700-38 TERMINATION FOR CAUSE

If the Contractor is adjudged bankrupt, makes a general assignment for the benefit of creditors, suffers the appointment of a receiver on account of its insolvency, fails to supply sufficient properly skilled workers or materials, fails to make prompt payment to subcontractors or materialmen, disregards laws, ordinances, rules, regulations, or orders of any public authority having jurisdiction, fails to diligently prosecute the work, or is otherwise guilty of a material violation of this agreement and fails within seven days after receipt of written notice to commence and continue correction of such default, neglect, or violation with diligence and promptness, the County may, after seven days following receipt by the Contractor of an additional written notice and without prejudice to any other remedy the County may have, terminate the employment of the Contractor and take possession of the site as well as all materials, equipment, tools, construction equipment and machinery thereon. The County may finish the work by whatever methods the County deems expedient. In such case, the Contractor shall not be entitled to receive any further payment until the work is completed. If the unpaid balance of the contract price exceeds the cost of completing the work, such excess shall be paid to the Contractor. If such costs exceed the unpaid balance, the Contractor shall pay the difference to the County on demand. This obligation for payment shall survive the termination of the contract. Termination of this agreement pursuant to this paragraph may result in disqualification of the Contractor from bidding on future County contracts.

00700-39 TERMINATION FOR CONVENIENCE

The County may, at any time upon written notice to the Contractor, terminate the whole or any portion of the work for the convenience of the County. The effective data of the terminations shall be provided in the written notice. Said termination shall be without prejudice to any right or remedy of the County provided herein. In addition, in the event this agreement has been terminated due to the default of the Contractor, and if it is later determined that the Contractor was not in default pursuant to the provisions of this agreement at the time of termination, then such termination shall be considered a termination for convenience pursuant to this paragraph.

00700-40 TERMINATION FOR CONVENIENCE - PAYMENT

If the Contract is terminated for convenience by the Owner as provided in this article, Contractor will be paid compensation for those services actually performed as approved by the Owner or his representative. Partially completed tasks will be compensated for based on a signed statement of completion prepared by the Project Manager and submitted to the Contractor which shall itemize each task element and briefly state what work has been completed and what work remains to be done. Contractor shall also be paid for reasonable costs for the orderly filing and closing of the project.

00700-41 TERMINATION FOR CONVENIENCE - PAYMENT LIMITATIONS

Except for normal spoilage, and except to the extent that the County shall have otherwise expressly assumed the risk of loss, there shall be excluded from the amounts payable to the Contractor the fair value, as determined by the Construction Manager, of property which is destroyed, lost, stolen or damaged so as to become undeliverable to the County or to another buyer.

00700-42 COST TO CURE

If the County terminates for cause the whole or any part of the work pursuant to this agreement, then the County may procure upon such terms and in such manner as the Construction Manager may deem appropriate, supplies or services similar to those so terminated, and the Contractor shall be liable to the County for any excess costs for such similar supplies or services. The Contractor shall continue the performance of this agreement to the extent not terminated hereunder.

00700-43 ATTORNEY'S FEES

Should the Contractor default pursuant to any of the provisions of this agreement, the Contractor and its surety shall pay to the County such reasonable attorney's fees as the County may expend as a result thereof and all costs, expenses, and filing fees incidental thereto.

00700-44 CONTRACTOR'S RESPONSIBILITIES UPON TERMINATION

After receipt of a notice of termination from the County, and except as otherwise directed by the Construction Manager, the Contractor shall:

1. Stop work under the contract on the date and to the extent specified in the notice of termination;
2. Place no further orders or subcontracts for materials, services or facilities, except as may be necessary for completion of such portion of the work under the agreement as is not terminated;
3. Terminate all orders and subcontracts to the extent that they relate to the performance of work terminated by the notice of termination;
4. Assign to the County in the manner, at the times, and to the extent directed by the Construction Manager, all of the rights, title and interest of the Contractor under the orders and subcontracts so terminated, in which case the County shall have the right, at its discretion, to settle or pay any and all claims arising out of the termination of such orders or subcontracts;
5. Settle all outstanding liabilities and all claims arising out of such termination of orders and subcontracts with the approval or ratification of the Construction

Manager, to the extent the Construction Manager may require, which approval or ratification shall be final for all purposes;

6. Transfer title and deliver to the entity or entities designated by the Construction Manager, in the manner, at the times, and to the extent, if any, directed by the Construction Manager, and to the extent specifically produced or specifically acquired by the Contractor for the performance of such portion of the work as has been terminated:

   a. The fabricated or un-fabricated parts, work, and progress, partially completed supplies, and equipment, materials, parts, tools, dyes, jigs, and other fixtures, completed work, supplies, and other material produced as a part of or acquired in connection with the performance of the work terminated by the notice of termination; and

   b. The completed or partially completed plans, drawings, information, and other property to the work.

7. Use its best efforts to sell in the manner, at the times, to the extent, and at the prices directed or authorized by the Construction Manager, any property described in Section 6 of this paragraph, provided, however, that the Contractor shall not be required to extend credit to any buyer and further provided that the proceeds of any such transfer or disposition shall be applied in reduction of any payments to be made by the County to the Contractor pursuant to this agreement.

8. Complete performance of such part of the work as shall not have been terminated by the notice of termination; and

9. Take such action as may be necessary, or as the Construction Manager may direct, for the protection and preservation of the property related to the agreement which is in the possession of the Contractor and in which the County has or may acquire an interest.

00700-45 RECORDS

The Contractor shall preserve and make available to the County all of its records, books, documents and other evidence bearing on the costs and expenses of the Contractor and any subcontractor pursuant to this agreement upon three days advance notice to the Contractor.

00700-46 DEDUCTIONS

In arriving at any amount due the Contractor pursuant to the terms of this agreement, there shall be deducted all liquidated damages, advance payments made to the Contractor applicable to the termination portion of the contract, the amount of any claim which the County may have against the Contractor, the amount determined

By the Construction Manager to be necessary to protect the County against loss due to outstanding potential liens or claims, and the agreed price of any materials acquired or sold by the Contractor and not otherwise recovered by or credited to the County.

00700-47 REIMBURSEMENT OF THE COUNTY

In the event of termination, the Contractor shall refund to the County any amount paid by the County to the Contractor in excess of the costs properly reimbursable to the Contractor.

00700-48 SUSPENSION, INTERRUPTION, DELAY, DAMAGES

The Contractor shall be entitled to only those damages and that relief from termination by the County as specifically set forth in this agreement. The Construction Manager may issue a written order requiring the Contractor to suspend, delay or interrupt all or any part of the work for such period of time as the County may determine to be appropriate for the convenience of the County. If the performance of the work is interrupted for an unreasonable period of time by an act of the County or any of its officers, agents, employees, contractors, or consultants in the administration of this agreement, an equitable adjustment shall be made for any increase in the Contractor's costs of performance and any increase in the time required for performance of the work necessarily caused by the unreasonable suspension, delay, or interruption. Any equitable adjustment shall be reduced to writing and shall constitute a modification to this agreement. In no event, however, shall an equitable adjustment be made to the extent that performance of this agreement would have been suspended, delayed or interrupted by any other cause, including the fault or negligence of the Contractor. No claim for an equitable adjustment pursuant to this paragraph shall be permitted before the Contractor shall have notified the Construction Manager in writing of the act or failure to act involved, and no claim shall be allowed unless asserted in writing to the Construction Manager within ten days after the termination of such suspension, delay or interruption.

00700-49 COMMENCEMENT AND DURATION OF WORK

The County may issue a Notice to Proceed at any time within 120 days following execution of the contract by the County. The Contractor shall commence work pursuant to this agreement within ten days of mailing or delivery of written notice to proceed. The Contractor shall diligently prosecute the work to completion within the time specified therefore in the Agreement. The capacity of the Contractor's construction and manufacturing equipment and plan, sequence and method of operation and forces employed, including management and supervisory personnel, shall be such as to insure completion of the work within the time specified in the Agreement. The Contractor and County hereby agree that the contract time for completion of the work is reasonable taking into consideration the average climatic conditions prevailing in the locality of the work and anticipated work schedules of other contractors whose activities are in conjunction with or may affect the work under this contract.

00700-50 TIME OF THE ESSENCE

All time limits stated in this agreement are of the essence of this contract.

00700-51 IMPACT DAMAGES

Except as specifically provided pursuant to a stop work order or change order, the Contractor shall not be entitled to payment or compensation of any kind from the County for direct or indirect or impact damages including, but not limited to, costs of acceleration arising because of delay, disruption, interference or hindrance from any cause whatsoever whether such delay, disruption, interference or hindrance is reasonable or unreasonable, foreseeable or unforeseeable, or avoidable, provided, however, that this provision shall not preclude the recovery of damages by the Contractor for hindrances or delays due solely to fraud or bad faith on the part of the County, its agents, or employees. The Contractor shall be entitled only to extensions in the time required for performance of the work as specifically provided in the contract.

00700-52 DELAY

The Contractor may be entitled to an extension of the contract time, but not an increase in the contract price or damages, for delays arising from unforeseeable causes beyond the control and

without the fault or negligence of the Contractor or its subcontractors for labor strikes, acts of God, acts of the public enemy, acts of the state, federal or local government in its sovereign capacity, by acts of another separate contractor, or by an act or neglect of the County.

00700-53 INCLEMENT WEATHER

The Contractor shall not be entitled to an extension of the contract time due to normal inclement weather. Unless the Contractor can substantiate to the satisfaction of the Construction Manager that there was greater than normal inclement weather and that such greater than normal inclement weather actually delayed the work, the Contractor shall not be entitled to an extension of time therefore. The following shall be considered the normal inclement weather days for each month listed, and extensions of time shall be granted in increments of not less than one half day only for inclement weather in excess of the days set out.

January	10 days
February	10 days
March	7 days
April	6 days
May	4 days
June	3 days
July	4 days
August	2 days
September	2 days
October	3 days
November	6 days
December	9 days

00700-54 DELAY - NOTICE AND CLAIM

The Contractor shall not receive an extension of time unless a Notice of Delay is filed with the Construction Manager within ten days of the first instance of such delay, disruption, interference or hindrance and a written Statement of the Claim is filed with the Construction Manager within 20 days of the first such instance. In the event that the Contractor fails to comply with this provision, it waives any claim which it may have for an extension of time pursuant to this agreement.

00700-55 STATEMENT OF CLAIM - CONTENTS

The Statement of Claim referenced in Article 00700-54 shall include specific information concerning the nature of the delay, the date of commencement of the delay, the construction activities affected by the delay, the person or organization responsible for the delay, the anticipated extent of the delay, and any recommended action to avoid or minimize the delay.

00700-56 WORK BEHIND SCHEDULE, REMEDY BY CONTRACTOR

If the work actually in place falls behind the currently updated and approved schedule, and it becomes apparent from the current schedule that work will not be completed within the contract time, the Contractor agrees that it will, as necessary, or as directed by the Construction Manager, take action at no additional cost to the County to improve the progress of the work, including increasing manpower, increasing the number of working hours per shift or shifts per working day,

increasing the amount of equipment at the site, and any other measure reasonably required to complete the work in a timely fashion.

00700-57 DILIGENCE

The Contractor's failure to substantially comply with the requirements of the preceding paragraph may be grounds for determination by the County that the Contractor is failing to prosecute the work with such diligence as will insure its completion within the time specified. In such event, the County shall have the right to furnish, from its own forces or by contract, such additional labor and materials as may be required to comply with the schedule after 48 hours written notice to the Contractor, and the Contractor shall be liable for such costs incurred by the County.

00700-58 SET-OFFS

Any monies due to the Contractor pursuant to the preceding paragraph of this agreement may be deducted by the County against monies due from the County to the Contractor.

00700-59 REMEDIES CUMULATIVE

The remedies of the County under Articles 00700-56, 00700-57, and 00700-58 are in addition to and without prejudice to all of the rights and remedies of the County at law, in equity, or contained in this agreement.

00700-60 TITLE TO MATERIALS

No materials or supplies shall be purchased by the Contractor or by any Subcontractor subject to any chattel mortgage or under a conditional sales contract or other agreement by which any interest is retained by the seller. The Contractor hereby warrants that it has good and marketable title to all materials and supplies used by it in the work, and the Contractor further warrants that all materials and supplies shall be free from all liens, claims, or encumbrances at the time of incorporation in the work.

00700-61 INSPECTION OF MATERIALS

All materials and equipment used in the construction of the project shall be subject to adequate inspection and testing in accordance with accepted standards and in accordance with the requirements of the contract documents. Additional tests performed after the rejection of materials or equipment shall be at the Contractor's expense.

00700-62 CONSTRUCTION MANAGER'S PRESENCE DURING TESTING

All tests performed by the Contractor shall be witnessed by the Construction Manager unless the requirement therefore is waived in writing. The Construction Manager may perform additional tests on materials previously tested by the Contractor, and the Contractor shall furnish samples for this purpose as requested.

00700-63 MATERIALS INCORPORATED IN WORK

The Contractor shall furnish all materials and equipment to be incorporated in the work. All such materials or equipment shall be new and of the highest quality available. Manufactured materials and equipment shall be obtained from sources which are currently manufacturing such materials, except as otherwise specifically approved by the Construction Manager.

00700-64 STORAGE OF MATERIALS

Materials and equipment to be incorporated in the work shall be stored in such a manner as to preserve their quality and fitness for the work and to facilitate inspection.

00700-65 PAYROLL REPORTS

The Contractor may be required to furnish payroll reports to the Construction Manager as required by the Owner Controlled Insurance Program.

00700-66 CONTRACTORS' REPRESENTATIVE

Before beginning work, the Contractor shall notify the Construction Manager in writing of one person within its organization who shall have complete authority to supervise the work, receive orders from the Construction Manager, and represent the Contractor in all matters arising pursuant to this agreement. The Contractor shall not remove its representative without first designating in writing a new representative. The Contractor's representative shall normally be present at or about the site of work while the work is in progress. When neither the Contractor nor its representative is present at the work site, the superintendent, foreman, or other of the Contractor' employee in charge of the work shall be an authorized representative of the Contractor.

00700-67 SPECIALTY SUB-CONTRACTORS

The Contractor may utilize the services of specialty subcontractors on those parts of the project which, under normal contracting practices, are performed by specialty subcontractors. The Contractor shall not award more than seventy-five percent of the work to subcontractors.

00700-68 INSPECTION BY THE CONSTRUCTION MANAGER

All work pursuant to this agreement shall be subject to inspection by the Construction Manager for conformity with contract drawings and specifications. The Contractor shall give the Construction Manager reasonable advance notice of operations requiring special inspection of a portion of the work.

00700-69 WORK COVERED PRIOR TO CONSTRUCTION MANAGER'S INSPECTION

In the event that work is covered or completed without the approval of the Construction Manager, and such approval is required by the specifications or required in advance by the Construction Manager, the Contractor shall bear all costs involved in inspection notwithstanding conformance of such portion of the work to the contract drawings and specifications.

00700-70 SCHEDULING OF THE WORK

The work of this contract shall be planned, scheduled, executed, and reported as required by the Contract Documents.

00700-71 PROGRESS ESTIMATES

The Contractor shall prepare a written report for the Construction Manager's approval, on County forms, of the total value of work performed and materials and equipment obtained to the date of submission. Such a report must accompany each request for a progress payment and is subject

to review and approval by the Construction Manager. Approval of a progress estimate or tendering of a progress payment shall not be considered an approval or acceptance of any work performed, and all estimates and payments shall be subject to correction in subsequent estimates. Progress payments shall be made for all completed activities and for materials suitably stored on-site.

00700-72 PROGRESS PAYMENTS

Upon approval of each monthly estimate of work performed and materials furnished, the Construction Manager shall approve payment to the Contractor for the estimated value of such work, materials, and equipment, less the amount of all prior payments and any liquidated damages. The Contractor will be paid 100 percent, less retainage, of the cost of materials received and properly stored on-site but not incorporated into the work. Payments for materials or equipment stored on the site shall be conditioned upon submission by the Contractor of bills of sale to establish the County's title to such materials or equipment. The Contractor's request for payment shall provide sufficient detail as to the work completed or materials purchased for which payment is requested to permit meaningful review by the Construction Manager.

00700-73 TIME OF PAYMENT

The Contractor will be paid within 45 days following receipt of an approved Progress Estimate. The Contractor expressly agrees that the payment provisions within this Contract shall supersede the rates of interest, payment periods, and contract and subcontract terms provided for under the Georgia Prompt Pay Act, O.C.G.A. §13-11-1 et seq., and that the rates of interest, payment periods, and contract and subcontract terms provided for under the Prompt Pay Act shall have no application to this Contract. The County shall not be liable for any late payment interest or penalty.

00700-74 RETAINAGE

The County shall retain from each progress payment ten percent of the estimated value of the work performed until the progress payments, including retainage, total 50 percent of the contract price. If a contract includes two or more projects or assignments that have been separately priced and have separate budgets, and the performances of such projects or assignments are not related to or dependent upon the performance of any other, the 50 per cent limit shall be based upon the price for each individual project or assignment. Thereafter, no further retainage shall be withheld so long as the Contractor is making satisfactory progress to insure completion of the work within the time specified therefore. The County may reinstate the ten percent retainage in the event the Construction Manager determines that the Contractor is not making satisfactory progress to complete the work within the time specified in this agreement or in the event that the Construction Manager provides a specific cause for such withholding. The County may also withhold retainage upon substantial completion of the work as provided in O.C.G.A. §13-10-81(c). Interest may be paid upon the retainage in accordance with Georgia law.

00700-75 PAYMENT OF SUBCONTRACTORS

The Contractor shall promptly pay each subcontractor upon the receipt of payment from the County. Such payment shall be made from the amount paid to the Contractor pursuant to the subcontractor's work. The Contractor shall also maintain the records of the percentage retained from payments to the Contractor pursuant to such subcontractor's work. The Contractor shall procure agreements from each subcontractor requiring each subcontractor to pay their subcontractors, agents and employees in a similar manner. The County reserves the right to inquire of any subcontractor, supplier, materialmen, or subconsultant, the status of any indebtedness of the Contractor. The County further reserves the right to require the Contractor to

designate on each instrument of payment exceeding $400.00 to subcontractors, suppliers, materialmen, and subconsultants that such payment is on account of the work under this Contract.

00700-76 COUNTY'S RESPONSIBILITIES TO SUBCONTRACTORS

Neither the County nor the Construction Manager shall have any obligation to pay any subcontractor except as otherwise required by law.

00700-77 PROGRESS PAYMENTS - ACCEPTANCE OF WORK

Certification of progress payments, as well as the actual payment thereof, shall not constitute the County's acceptance of work performed pursuant to this agreement.

00700-78 PAYMENTS IN TRUST

All sums paid to the Contractor pursuant to this agreement are hereby declared to constitute trust funds in the hands of the contractor to be applied first to the payment of claims of subcontractors, laborers, and suppliers arising out of the work, to claims for utilities furnished and taxes imposed, and to the payment of premiums on surety and other bonds and on insurance for any other application.

00700-79 JOINT PAYMENTS

The County reserves the right to issue any progress payment or final payment by check jointly to the Contractor and any subcontractor or supplier.

00700-80 RIGHT TO WITHHOLD PAYMENT

The Construction Manager may decline to approve payment and may withhold payment in whole or in part to the extent reasonable and necessary to protect the County against loss due to defective work, probable or actual third party claims, the Contractor's failure to pay subcontractors or materialmen, reasonable evidence that the work will not be completed within the contract time or contract price or damage to the County or any other contractor on the project.

00700-81 CERTIFICATE OF SUBSTANTIAL COMPLETION

Upon the Contractor's submission of a request for a certificate of Substantial Completion, the Construction Manager shall inspect the work and determine whether the work is Substantially Complete. If the work is Substantially Complete, the Construction Manager shall issue a certificate of Substantial Completion of the work which shall establish the date of Substantial Completion, shall state the responsibilities of the County and the Contractor for security, maintenance, heat, utilities, damage to the work and insurance, and shall fix the time within which the Contractor shall complete the items submitted by the Contractor as requiring correction or further work. The certificate of substantial completion of the work shall be submitted to the County and the Contractor for their written acceptance of the responsibilities assigned to them pursuant to such certificate.

If in the sole opinion of the Construction Manager, the work is not substantially complete, the Construction Manager shall notify the Contractor of such, in writing, and outline requirements to be met to achieve Substantial Completion.

00700-82 PAYMENT UPON SUBSTANTIAL COMPLETION

Upon Substantial Completion of the work and upon application by the Contractor and approval by the Construction Manager, the County shall make payment reflecting 100% work completed, less value of work remaining as determined by Construction Manager and any authorized retainage.

00700-83 COMMENCEMENT OF WARRANTIES

Warranties required by this agreement shall commence on the date of final completion of the project as determined under Article 00700-84 unless otherwise provided in the certificate of Substantial Completion.

00700-84 FINAL PAYMENT - WAIVER OF CLAIMS, DISPUTE OF FINAL PAYMENT

The acceptance of the Substantial Completion payment shall constitute a waiver of all claims by the Contractor except those previously made in writing and identified by the Contractor as unsettled at the time of application for payment at Substantial Completion and except for the retainage sums due at final acceptance. Following the Construction Manager's issuance of the certificate of Substantial Completion and the Contractor's completion of the work pursuant to this agreement, the Contractor shall forward to the Construction Manager a written notice that the work is ready for final inspection and acceptance. If after inspection the Construction Manager certifies that the work is complete and issues written notification of such to the Contractor, the Contractor shall forward to the Construction Manager a final application for payment. The Construction Manager shall issue a certificate for payment, which shall approve final payment to the Contractor and shall establish the date of final completion.

In the event the Contractor timely disputes the amount of the final payment, the amount due the Contractor shall be deemed by the Contractor and the County to be an unliquidated sum and no interest shall accrue or be payable on the sum finally determined to be due to the Contractor for any period prior to final determination of such sum, whether such determination be by agreement of the Contractor and the County or by final judgment of the proper court in the event of litigation between the County and the Contractor. The Contractor specifically waives and renounces any and all rights it may have under O.C.G.A. §13-6-13 and agrees that in the event suit is brought by the Contractor against the County for any sum claimed by the Contractor under the Contract or for any extra or additional work, no interest shall be awarded on any sum found to be due from the County to the Contractor in the final judgment entered in such suit. All final judgments shall draw interest at the legal rate, as specified by law.

00700-85 DOCUMENTATION OF COMPLETION OF WORK

Neither the final payment nor the remaining retainage shall become due until the Contractor submits the following documents to the Construction Manager:

a. An affidavit that all payrolls, bills for materials and equipment, and other indebtedness connected with the work have been paid other otherwise satisfied;

b. The surety's consent to final payment; and

c. Any other data reasonably required by the County or Construction Manager establishing payment or satisfaction of all such obligations, including releases, waivers of liens, and documents of satisfaction of debts.

In the event that a subcontractor refuses to furnish a release or waiver as required by the County or Construction Manager, the Contractor may furnish a bond satisfactory to the County to indemnify the County against such loss. In the event that any lien or indebtedness remains unsatisfied after all payments are made, the contractor shall refund to the County all moneys that

the County may become compelled to pay in discharging such lien or other indebtedness, including all costs and reasonable attorney's fees.

00700-86 GOVERNING LAW

Each and every provision of this agreement shall be construed in accordance with and governed by Georgia law. The parties acknowledge that this contract is executed in Fulton County, Georgia and that the contract is to be performed in Fulton County, Georgia. Each party hereby consents to the Fulton Superior Court's sole jurisdiction over any dispute which arises as a result of the execution or performance of this agreement, and each party hereby waives any and all objections to venue in the Fulton Superior Court.

00700-87 CHANGES IN THE WORK

A. CHANGE ORDERS

1. A Change Order is a written order to the Contractor signed to show the approval and the authorization of the County, issued after execution of the Contract, authorizing a change in the Work and/or an adjustment in the Contract Sum or the Contract Time. Change Orders shall be written using forms designated by the County with Contractor providing supporting documentation as required by the Construction Manager. The Contract Sum and the Contract Time may be changed only by approved Change Order pursuant to Fulton County Procedure 800-6. The amount payable by the Change Order is payment in full for all direct and indirect costs incurred and related to the work under said Change Order, including but not limited to delays, imports, acceleration, disruption and extended overhead. A Change Order signed by the Contractor indicates the Contractor's agreement therewith, including the adjustment in either or both of the Contract Sum or the Contract Time.

2. The County, without invalidating the Contract, may order changes in the Work within the general scope of the Contract as defined herein. The time allowed for performance of the work and the contract price to be paid to the Contractor may be adjusted accordingly.

3. The cost or credit to the County resulting from a change in the Work shall be determined in one or more of the following ways:

   a. By mutual acceptance of a lump sum properly itemized and supported by sufficient substantiating data to permit evaluation;

   b. By unit prices stated in the Contract Documents or subsequently agreed upon;

   c. By cost to be determined in a manner agreed upon by the parties and a mutually acceptable fixed or percentage fee; or

   d. By the method provided in Subparagraph A4 below.

4. If none of the methods set forth in Subparagraphs 3a, 3b, or 3c above is agreed upon, the Contractor, provided a written order signed by the Construction Manager is received, shall promptly proceed with the Work involved. The cost of such Work shall then be determined by the Construction Manager on basis of the reasonable expenditures and savings of those performing the Work attributable to the change. The cost of the change shall include only the items listed in Subparagraph 5a below, and in the case of either a decrease or an increase in the Contract Sum, an allowance for overhead and profit in accordance with the schedules set forth in Subparagraphs 5b and 6 below shall be applied to the cost or credit.

a. In such case, and also under Subparagraph 3a above, the Contractor shall keep and present, in such form as the Construction Manager may prescribe, an itemized accounting of all actual costs expended, together with appropriate supporting data for inclusion in a Change Order.

b. All hourly rate charges shall b submitted to the Construction Manager for prior review and approval. All hourly rate charges shall be properly supported as required by the Construction Manager with certified payrolls, or their acceptable equivalent. When authorized to proceed for a given change and actual expenditures have been made prior to execution of a Change Order for the entire change, such actual expenditures may be summarized monthly, and if approved, incorporated into a Change Order. When both additions and credits covering related Work or substitutions are involved in any one change, the allowance for overhead and profit shall be figured on the basis of the net increase or decrease, if any, with respect to that change.

5. In Subparagraphs 3 and 4 above, the items included in "Cost and "Overhead" shall be based on the following schedule:

a. Unless otherwise provided in the Contract Documents, "Cost" shall be limited to the following: cost of materials incorporated into the Work, including sales tax and cost of delivery; cost of direct labor (labor cost may include a pro rata share of foreman's account of the change) including social security, old age and unemployment insurance, and fringe benefits required by agreement or custom; workers' or workmen's compensation insurance; rental value of equipment and machinery; costs for preparing Shop Drawings.

b. Unless otherwise provided in the Contract Documents, "Overhead" shall include the following: bond and insurance premiums including increase and decreases from change in the Work, supervision, superintendence, construction parking, wages of timekeepers, watchmen and clerks, small tools, consumable supplies, expendables, incidentals, general office expense, the cost of additional reproduction for the Contractor's subcontractors beyond that agreed upon in the Contract Documents, construction parking, any additional costs of craft supervision by the Contractor's or subcontractors' superintendents, and overhead charges which would be customary and expended regardless of the change in the Work due to other overlapping activities which are included as part of the original Contract, and all other expenses not included in "Cost" above.

c. In the event that a change is issued by the County which would require the expenditure of substantial amounts of special supervision (beyond the foreman level) by the Contractor, the Contractor may, at the sole direction of the Construction Manager, be allowed to incorporate these charges into the agreement cost for the change.

6. In Subparagraphs 3 and 4 above, the allowance for overhead and profit combined, included in the total cost or credit to the County, shall be based on the following schedule:

a. For the Contractor, for any work performed by the Contractor's own forces, ten (10) percent of the cost.

b. For the Contractor, for any work performed by a Contractor's subcontractor, five (5) percent of the amount due the subcontractor.

c. For each subcontractor or sub-subcontractor involved, for any work performed by that subcontractor's or sub-subcontractor's own forces, ten (10) percent of the cost.

d. For each subcontractor, for work performed by a sub-subcontractor, five (5) percent of the amount due to the sub-subcontractor.

e. Cost to which overhead and profit is to be applied shall be determined in accordance with Subparagraph 5 above unless modified otherwise.

7. In order to facilitate checking of quotations for extras or credits, all proposals or bids, except those so minor that their propriety can be seen by inspection, shall be accompanied by a complete itemization of costs, including labor cost, materials and subcontracts. Labor and materials shall be itemized in the manner defined in Subparagraph 4 above. Where major cost items are subcontracts, they shall be itemized also. In no case shall a change be approved without such itemization.

8. No payment shall be made for any changes to the contract that are not included in a fully executed Change Order.

B. CONCEALED, UNKNOWN AND DIFFERING CONDITIONS

1. Should concealed conditions be encountered in the performance of the Work below the surface of the ground, or should concealed or unknown conditions in an existing structure be at variance with the conditions indicated by the Contract Documents, or should unknown physical conditions below the surface of the ground or concealed or unknown conditions in an existing structure of an unusual nature, differing materially from those ordinarily encountered and generally recognized as inherent in work of the character provided for in this Contract, be encountered, the Contract Sum and Contract Time shall be equitably adjusted by Change Order upon request by either party made **within twenty (20) days after the first observance** of the conditions. No such request for equitable adjustment shall be valid unless the Contractor complies with this (20) days notice and Subparagraph C.1. below.

2. The Contractor shall promptly, and before such conditions are disturbed, notify the Construction Manager in writing of any claim of concealed, unknown or differing conditions pursuant to this paragraph. The Construction Manager shall authorize the Engineer to investigate the conditions, and if it is found that such conditions do materially so differ and cause an increase or decrease in the Contractor's cost of, or the time required for, performance of any part of the Work under this Contract, whether or not changed as a result of such conditions, an equitable adjustment shall be recommended to the Construction Manager.

3. No claim of the Contractor under this clause shall be allowed unless the Contractor has given the notice required in (a) above, prior to disturbing the condition.

4. No claim by the Contractor for an equitable adjustment shall be allowed if asserted after final payment under this Contract.

5. Any materially differing site condition as between what is shown on the Drawings and Specifications and actually found on site shall be immediately reported to the Construction Manager in writing prior to the commencement of Work at the site. Failure of the Contractor to notify the Construction Manager in writing of the differing site condition prior to performance of Work at the site shall constitute a waiver of any claim for additional monies. Any Change Order necessitated by the differing site condition shall be processed as provided under "Changes in the Contract".

C. REQUESTS FOR ADDITIONAL COST

1. If the Contractor wishes to request an increase in the Contract Sum, the Contractor shall give the Construction Manager written notice thereof within twenty (20) days after the occurrence of the event, or identification of the conditions, giving rise to such request. This notice shall be give by the Contractor before proceeding to execute the Work, except in an emergency endangering life or property in which case the Contractor shall proceed in accordance with Article 00700-25 and Subparagraph A.4 above. No such request shall be valid unless so made within the twenty (20) days specified above. If the County and the Contractor cannot agree on the amount of the adjustment in the Contract Sum, it shall be determined by the Construction Manager. Any change in the Contract Sum resulting from such claim shall be documented by Change Order.

2. If the Contractor claims that addition cost is involved because of, but not limited to (1) any written interpretation pursuant to General Condition 00700-17 of this Agreement, (2) any order by the County to stop the Work pursuant to Articles 00700-25 and 00700-37 of this Agreement where the Contractor was not at fault, or any such order by the Construction Manager as the County's agent, or (3) any written order for a minor change in the Work issued pursuant to Paragraph D below, the Contractor shall submit a request for an increase in the Contract Sum as provided in Subparagraph C.1 above. No such claim shall be valid unless the Contractor complies with Subparagraph C.1 above and approved by the County pursuant to Change Order Policy 800-6.

D. MINOR CHANGES IN THE WORK

The Construction Manager may order minor changes in the Work not involving an adjustment in the Contract Price, extension of the time allowed for performance of the work and not inconsistent with the intent of the Contract Documents. Such changes shall be effected by a written Change Directive issued by the Construction Manager, and shall be binding on the County and the Contractor. The Contractor shall carry out such written orders promptly.

E. BONDS

If any change order results in an increase in the contract price, the contractor shall increase the penal sum of the performance and payment bonds to equal the increased price.

00700-88 DISAGREEMENT WITH ORDERS FOR CHANGE

Contractor's written acceptance of a Change Order or other order for changes shall constitute his final and binding agreement to the provisions thereof and a waiver of all claims in connection therewith, whether direct or consequential in nature. Should Contractor disagree with any order for changes, he may submit a notice of potential claim to the Construction Manager, at such time as the order is set forth in the form of a Change Order. Disagreement with the provisions of an order for changes shall not relieve Contractor of his obligation under Article 00700-87 of this Agreement.

00700-89 NO WAIVER OF REMEDIES

Exercise by the County of any remedy is not exclusive of any other remedy available to County and shall not constitute a waiver of any such other remedies. Failure of the County to exercise any remedy, including breach of contract remedies, shall not preclude the County from exercising such remedies in similar circumstances in the future.

00700-90 LAND AND RIGHTS-OF-WAY

The owner will provide, as indicated in the Contract Documents and prior to Notice to Proceed, the lands upon which the work is to be done, right-of-way for access thereto, and such other lands which are designated for the use of the Contractor. The Contractor shall confine the Contractor's work and all associated activities to the easements and other areas designated for the Contractor's use. The Contractor shall comply with any limits on construction methods and practices which may be required by easement agreements. If, due to some unforeseen reason, the necessary easements are not obtained, the Contractor shall receive an equitable extension of contract time dependent upon the effect on the critical path of the project schedule or the County may terminate the Contract for its convenience.

00700-91 COORDINATION WITH STATE DEPARTMENT OF TRANSPORTATION

No clearing or grading shall be completed by Contractor within the State Department of Transportation (DOT) area under construction. The Contractor must coordinate his construction scheduling with DOT.

If the Contractor begins work before DOT's completion date, he must obtain the approval of DOT before starting work in the area. The state DOT has the right to stop the Contractor's work the DOT area.

The Contractor shall receive no additional compensation or damages resulting from delay or work stoppage from DOT actions or scheduling.

Contractor shall obtain DOT drawings of the DOT, project area for verification of road geometry, storm drains, etc. from Georgia Department of Transportation or Fulton County. The Contractor is responsible for obtaining any pertinent DOT revisions.

INDEX

SUBJECT	GENERAL CONDITION ARTICLE #
Administration of Contract	17
Applicable Law	7
Assignment	13
Blasting and Excavation	26
Changes	87, 88
Clean Site	29
Codes	4
Commencement of Work	49
Contract Documents	2
Contractor's Representative	66
Defective Work	31, 32
Definitions	3
Delay	51, 52, 54, 55
Extension of Time	52, 53, 54
Familiarity of Time	1, 22
Final Payment	84
Governing Law	86
High Voltage Lines	27
Inclement Weather	53
Indemnification	15
Inspections	23, 61, 62, 68, 69
Interruption	48
Licenses	8
Liquidated Damages	46, 48
New Materials	33, 63
Notices	24
Payment	72, 73, 75
Payment of Subcontractors	75, 76
Payment Upon Substantial Completion	82, 84
Payroll Reports	65
Permits	8
Progress Payments	72, 73, 77, 78, 79, 80
Protection of Work	30, 64
Records Inspection	45

Retainage	11, 74
Safety	25
Scaffolding and Staging	28
Scheduling	70
Service of Process	14
Stop Work Order	37
Subcontractors	67, 76
Substantial Completion	81
Suspension	48
Supervision of Work	16, 66
Surety's Responsibility	17
Taxes	9, 10
Termination for Cause	38, 44, 47
Termination for Convenience	39, 40, 41
Time of the Essence	50
Warranties	33, 34, 35, 36
Work Behind Schedule	56

EXHIBIT A

FINAL AFFIDAVIT

TO FULTON COUNTY, GEORGIA

I, _____, hereby certify that all suppliers of materials, equipment and service, subcontractors, mechanic, and laborers employed by _____ or any of his subcontractors in connection with the design and/or construction of _____ at Fulton County have been paid and satisfied in full as of _____, 200___, and that there are no outstanding obligations or claims of any kind for the payment of which Fulton County on the above-named project might be liable, or subject to, in any lawful proceeding at law or in equity.

_____

Signature

_____

Title

Personally appeared before me this _____ day of _____, 200_____. _____, who under Oath deposes and says that he is _____of the firm of _____, that he has read the above statement and that to the best of his knowledge and belief same is an exact true statement.

_____

Notary Public

_____

My Commission expires

END OF SECTION

SPECIAL CONDITIONS

THERE ARE NO SPECIAL CONDITIONS FOR THIS PROJECT

DIVISION WORK REQUIREMENTS

SECTION 01010

SUMMARY OF WORK

PART 1 - GENERAL

1.1 LOCATION OF WORK

A. The work of this contract is located within the City of Atlanta, Georgia, at 395 Pryor Street, NW as shown on Drawing A-0.0

1.2 DESCRIPTION

A. Definition: The Work is defined in General Conditions Section 00030

B. Summary: Major areas of the Work consist of, but are not limited to, the following:
   1. Exterior:
      a. Repair Canopy roofing at the main entrance to the building.
      b. Demolish and replace concrete entry walkway as indicated.
   2. First Floor
      a. Limit construction to the entry, lobby, control room and pat-down room.
      b. Replace existing flooring and carpet as indicated.
      c. Replace existing sliding doors with revolving doors.
      d. Add new ballistic windows as indicated on Drawings
      e. Add electrical outlets and circuits
      f. Add a new partition wall and bench as indicated on Drawings
      g. Add new mechanical equipment as indicated on Drawings
      h. Add new security cameras as indicated on Drawings
      i. Add new electrical wiring and equipment as indicated on Drawings
      j. Add new millwork as indicated on drawings
      k. Add new magnetic scanner as shown on the drawings
      l. Add new signage
      m. Replace storefront window where indicated
      n. Remove, relocate replace and add doors as indicated
   3. The building must remain open and unobstructed during normal work hours. All work must be done in the evenings and weekends from 6 pm to 7 am.
   4. Normal hourly rates shall apply for all work.
   5. Provide a deduct alternate for deleting revolving doors and leaving existing storefront sliding doors. (New doors 01, 02, 05 and 06 are to remain in the work.)
   6. Provide an allowance of $1,500 for a bench to be placed in the Main Lobby.

1.2 PRODUCTS (Not Required)

1.3 EXECUTION (Not Required)

END OF SECTION 01010

SECTION 01200

PROJECT MEETINGS

PART 1 GENERAL

1.1 SUMMARY

A. Work described: This section defines requirements for project meetings, of such nature as relates to the overall project.

B. Related work described elsewhere: A pre-construction conference relating to a specific trade or specific construction process or sequence is specified in the applicable section.

1.2 CONTRACTOR'S DUTIES

A. Scheduling and notification:
   1. Notify invited parties of meeting time and place at least 36 hours prior to meeting.
   2. Coordinate timing of progress meetings with Architect and Owner to coincide with progress of major division of work.
   3. Make physical arrangements for and preside over meetings.

B. Administration:
   1. Prepare meeting agenda and distribute to invited parties at least 36 hours prior to meetings.
   2. Record and promptly distribute copies of minutes of significant proceedings and decision of meetings.
   3. Prepare and distribute copies of construction progress schedules as originally issued or subsequently approved, marked to show current progress.

1.3 PRE-CONSTRUCTION CONFERENCE

A. Scheduling: A pre-construction conference shall be held at a location to be announced, prior to commencement of the Work.

B. Attendance:
   1. Owner
   2. Architect and invited consultants
   3. Contractor
   4. Major subcontractors as requested by Owner, Architect and Contractor
   5. Representatives of separate contractors, when applicable.

C. Minimum agenda:
   1. Distribute and discuss list of major subcontractors and material suppliers
   2. Distribute and review insurance submittals

3. Distribute tentative construction progress schedule and submittals schedule, with discussion of critical work sequencing.
4. Identify and designate responsible personnel.
5. Process and distribute field decisions, change orders and other Contract Documents
6. Process required submittals, including shop drawings, samples and product data, and review Contractor's submittal schedules.
7. Establish procedures for maintaining required Record Document and Maintenance Manuals.
8. Discuss use of site, including temporary offices, storage areas, erosion control and site use limitations and restrictions.
9. Discuss material and equipment deliveries, storage, protection and priorities
10. Discuss security procedures and methods.
11. Discuss housekeeping procedures and methods.
12. Discuss special project requirements and conditions.

1.3. PROGRESS AND COORDINATION MEETINGS:

A. Scheduling: Unless otherwise requested by Owner or Architect, a progress and coordination meeting shall be held twice monthly, at a time determined by Owner, at job site.

B. Attendance:
1. Contractor, represented by Project Manager or Principal.
2. Contractor's Project Superintendent
3. Subcontractors and material suppliers specifically invited, as applicable to the progress of the Work
4. Architect and invited consultants
5. Owner

C. Minimum agenda:
1. Review minutes of previous meeting, with review of follow-up and work progress since previous meeting.
2. Review field observations, problems and decisions.
3. Identify problems and potential problems affecting project construction or anticipated progress.
4. Review problems of materials delivery, off-site fabrication and subcontractor scheduling.
5. Develop corrective measures and procedures to regain planned schedule when delays occur.
6. Revise construction progress and submittals schedule to reflect actual progress.
7. Review details of anticipated construction progress prior to next meeting.
8. Review workmanship and maintenance of quality standards.
9. Review proposed changes, including effect on construction progress schedule and completion date.

PART 2 PRODUCTS (NOT USED)

PART 3 EXECUTION (NOT USED)

END OF SECTION 01312

SECTION 01320

SCHEDULE OF VALUES

PART 1 GENERAL

1.1 Description of Work

A. This specification covers the preparation, content and submittal of the schedule of values. The Schedule of Values is an itemized list that establishes the value or cost of each part of the Work. It shall be used as the basis for preparing progress payments.

B. Preparation
1. Schedule shall show breakdown of labor, materials equipment and other costs as directed by the Owner.
2. Costs shall be in sufficient detail to indicate separate amounts for each major subsection of the Work. The Contractor may include an item for bond, insurance, temporary facilities and job mobilization.
3. Schedule of Values shall be prepared on 8-1/2-inch by 11-inch white paper.
4. Use the major subsections of the Detailed Scope of Work as the basis for Schedule format. List sub-items of major products or systems as appropriate or when requested by the Owner.
5. When requested by the Owner, support values with data that will substantiate their correctness.
6. The sum of the individual values shown on the Schedule of Values must equal the total Job Order Price.
7. Schedule shall show the purchase and delivery costs for materials and equipment that the Contractor anticipates he shall request payment for prior to their installation.

C. Submittal: Submit two copies of Schedule, or any other number of copies as directed by the Owner, to the Owner for approval at least 20 days prior to submitting first application for a progress payment.

After review by the Owner, revise and resubmit Schedule as required until it is approved.

1.2 PRODUCTS (Not Used)

1.3 EXECUTION (Not Used)

END OF SECTION 01320

SECTION 01320a

REFERENCES

1.1 GENERAL

A. Definitions

1. General: Basic Contract definitions are included in the Conditions of the Contract.
2. "Approved": When used to convey Architect's action on Contractor's submittals, applications, and requests, "approved" is limited to Architect's duties and responsibilities as stated in the Conditions of the Contract.
3. "Directed": A command or instruction by Architect. Other terms including "requested," "authorized," "selected," "required," and "permitted" have the same meaning as "directed."
4. "Indicated": Requirements expressed by graphic representations or in written form on Drawings, in Specifications, and in other Contract Documents. Other terms including "shown," "noted," "scheduled," and "specified" have the same meaning as "indicated."
5. "Regulations": Laws, ordinances, statutes, and lawful orders issued by authorities having jurisdiction, and rules, conventions, and agreements within the construction industry that control performance of the Work.
6. "Furnish": Supply and deliver to Project site, ready for unloading, unpacking, assembly, installation, and similar operations.
7. "Install": Operations at Project site including unloading, temporarily storing, unpacking, assembling, erecting, placing, anchoring, applying, working to dimension, finishing, curing, protecting, cleaning, and similar operations.
8. "Provide": Furnish and install, complete and ready for the intended use.
9. "Project Site": Space available for performing construction activities. The extent of Project site is shown on Drawings and may or may not be identical with the description of the land on which Project is to be built.

B. Industry Standards

1. Applicability of Standards: Unless the Contract Documents include more stringent requirements, applicable construction industry standards have the same force and effect as if bound or copied directly into the Contract Documents to the extent referenced. Such standards are made a part of the Contract Documents by reference.
2. Publication Dates: Comply with standards in effect as of date of the Contract Documents unless otherwise indicated.
3. Copies of Standards: Each entity engaged in construction on Project should be familiar with industry standards applicable to its construction activity. Copies of applicable standards are not bound with the Contract Documents.

a. Where copies of standards are needed to perform a required construction activity, obtain copies directly from publication source.

C. Abbreviations And Acronyms

1. Industry Organizations: Where abbreviations and acronyms are used in Specifications or other Contract Documents, they shall mean the recognized name of the entities in the following list. Names, telephone numbers, and Web sites are subject to

change and are believed to be accurate and up-to-date as of the date of the Contract Documents.

AA Aluminum Association, Inc. (The) (703) 358-2960
www.aluminum.org
AAADM American Association of Automatic Door Manufacturers (216) 241-7333
www.aaadm.com
AABC Associated Air Balance Council (202) 737-02
AAMA American Architectural Manufacturers Association (847) 303-5664
www.aamanet.org
AASHTO American Association of State Highway and Transportation
Officials
(202) 624-5800
www.transportation.org
AATCC American Association of Textile Chemists and Colorists (The) (919) 549-8141
www.aatcc.org
ABAA Air Barrier Association of America (866) 956-5888
www.airbarrier.org
ABMA American Bearing Manufacturers Association (202) 367-1155
www.abma-dc.org
ACI ACI International (248) 848-3700
(American Concrete Institute)
www.aci-int.org
ACPA American Concrete Pipe Association (972) 506-7216
www.concrete-pipe.org
AEIC Association of Edison Illuminating Companies, Inc. (The) (205) 257-2530
www.aeic.org
AF&PA American Forest & Paper Association (800) 878-8878
www.afandpa.org (202) 463-2700
AGA American Gas Association (202) 824-7000
www.aga.org
AGC Associated General Contractors of America (The) (703) 548-3118
www.agc.org
AHA American Hardboard Association
(Now part of CPA)
AHAM Association of Home Appliance Manufacturers (202) 872-5955
www.aham.org
AI Asphalt Institute (859) 288-4960
www.asphaltinstitute.org
AIA American Institute of Architects (The) (800) 242-3837
www.aia.org (202) 626-7300
AISC American Institute of Steel Construction (800) 644-2400
www.aisc.org (312) 670-2400
AISI American Iron and Steel Institute (202) 452-7100
www.steel.org
AITC American Institute of Timber Construction (303) 792-9559
www.aitc-glulam.org
ALCA Associated Landscape Contractors of America
(Now PLANET - Professional Landcare Network)
ALSC American Lumber Standard Committee, Incorporated (301) 972-1700
www.alsc.org

AMCA Air Movement and Control Association International, Inc. (847) 394-0150
www.amca.org
ANSI American National Standards Institute (202) 293-8020
www.ansi.org
AOSA Association of Official Seed Analysts, Inc. (405) 780-7372
www.aosaseed.com
APA Architectural Precast Association (239) 454-6989
www.archprecast.org
APA APA - The Engineered Wood Association (253) 565-6600
www.apawood.org
APA EWS APA - The Engineered Wood Association; Engineered Wood Systems
(See APA - The Engineered Wood Association)
API American Petroleum Institute (202) 682-8000
www.api.org
ARI Air-Conditioning & Refrigeration Institute (703) 524-8800
www.ari.org
ARMA Asphalt Roofing Manufacturers Association (202) 207-0917
www.asphaltroofing.org
ASCE American Society of Civil Engineers (800) 548-2723
www.asce.org (703) 295-6300
ASCE/SEI American Society of Civil Engineers/Structural Engineering Institute
(See ASCE)
ASHRAE American Society of Heating, Refrigerating and Air-Conditioning Engineers
(800) 527-4723
www.ashrae.org (404) 636-8400
ASME ASME International (800) 843-2763
(The American Society of Mechanical Engineers International) (973) 882-1170
www.asme.org
ASSE American Society of Sanitary Engineering (440) 835-3040
www.asse-plumbing.org
ASTM ASTM International (610) 832-9585
EJMA Expansion Joint Manufacturers Association, Inc. (914) 332-0040
www.ejma.org
ESD ESD Association (315) 339-6937
www.esda.org
FIBA Federation Internationale de Basketball 41 22 545 00 00
(The International Basketball Federation)
www.fiba.com
FIVB Federation Internationale de Volleyball 41 21 345 35 35
(The International Volleyball Federation)
www.fivb.ch
FM Approvals FM Approvals (781) 762-4300
www.fmglobal.com
FM Global FM Global (401) 275-3000
(Formerly: FMG - FM Global)
www.fmglobal.com
FMRC Factory Mutual Research
(Now FM Global)

FRSA Florida Roofing, Sheet Metal & Air Conditioning Contractors Association, Inc.
(407) 671-3772
www.floridaroof.com
FSA Fluid Sealing Association (610) 971-4850
www.fluidsealing.com
FSC Forest Stewardship Council 49 228 367 66 0
www.fsc.org
GA Gypsum Association (202) 289-5440
www.gypsum.org
GANA Glass Association of North America (785) 271-0208
www.glasswebsite.com
GRI (Now GSI)
GS Green Seal (202) 872-6400
www.greenseal.org
GSI Geosynthetic Institute (610) 522-8440
www.geosynthetic-institute.org
HI Hydraulic Institute (888) 786-7744
www.pumps.org (973) 267-9700
HI Hydronics Institute (908) 464-8200
www.gamanet.org
HMMA Hollow Metal Manufacturers Association
(Part of NAAMM)
HPVA Hardwood Plywood & Veneer Association (703) 435-2900
www.hpva.org
HPW H. P. White Laboratory, Inc. (410) 838-6550
www.hpwhite.com
IAS International Approval Services
(Now CSA International)
IBF International Badminton Federation (6-03) 9283-7155
www.internationalbadminton.org
ICEA Insulated Cable Engineers Association, Inc. (770) 830-0369
www.icea.net
ICRI International Concrete Repair Institute, Inc. (847) 827-0830
www.icri.org
IEC International Electrotechnical Commission 41 22 919 02 11
www.iec.ch
IEEE Institute of Electrical and Electronics Engineers, Inc. (The) (212) 419-7900
www.ieee.org
IESNA Illuminating Engineering Society of North America (212) 248-5000
www.iesna.org
IEST Institute of Environmental Sciences and Technology (847) 255-1561
www.iest.org
IGCC Insulating Glass Certification Council (315) 646-2234
www.igcc.org
IGMA Insulating Glass Manufacturers Alliance (613) 233-1510
www.igmaonline.org
ILI Indiana Limestone Institute of America, Inc. (812) 275-4426
www.iliai.com
ISO International Organization for Standardization 41 22 749 01 11
www.iso.ch

Available from ANSI (202) 293-8020
www.ansi.org
ISSFA International Solid Surface Fabricators Association (877) 464-7732
www.issfa.net (702) 567-8150
ITS Intertek Testing Service NA (972) 238-5591
www.intertek.com
ITU International Telecommunication Union
www.itu.int/home
KCMA Kitchen Cabinet Manufacturers Association (703) 264-1690
www.kcma.org
LMA Laminating Materials Association
(Now part of CPA)
LPI Lightning Protection Institute (800) 488-6864
www.lightning.org
MBMA Metal Building Manufacturers Association (216) 241-7333
www.mbma.com
MFMA Maple Flooring Manufacturers Association, Inc. (847) 480-9138
www.maplefloor.org
MFMA Metal Framing Manufacturers Association, Inc. (312) 644-6610
www.metalframingmfg.org
MH Material Handling
(Now MHIA)
MHIA Material Handling Industry of America (800) 345-1815
www.mhia.org (704) 676-1190
MIA Marble Institute of America (440) 250-9222
www.marble-institute.com
MPI Master Painters Institute (888) 674-8937
www.paintinfo.com
MSS Manufacturers Standardization Society of The Valve and Fittings
Industry Inc.
(703) 281-6613
www.mss-hq.com
NAAMM National Association of Architectural Metal Manufacturers (312) 332-0405
www.naamm.org
NACE NACE International (800) 797-6623
(National Association of Corrosion Engineers International) (281) 228-6200
www.nace.org
NADCA National Air Duct Cleaners Association (202) 737-2926
www.nadca.com
NAGWS National Association for Girls and Women in Sport (800) 213-7193,
ext. 453
www.aahperd.org/nagws/
NAIMA North American Insulation Manufacturers Association (703) 684-0084
www.naima.org
NBGQA National Building Granite Quarries Association, Inc. (800) 557-2848
www.nbgqa.com
NCAA National Collegiate Athletic Association (The) (317) 917-6222
www.ncaa.org
NCMA National Concrete Masonry Association (703) 713-1900
www.ncma.org
NCPI National Clay Pipe Institute (262) 248-9094

www.ncpi.org
NCTA National Cable & Telecommunications Association (202) 775-3550
www.ncta.com
NEBB National Environmental Balancing Bureau (301) 977-3698
www.nebb.org
NECA National Electrical Contractors Association (301) 657-3110
www.necanet.org
NeLMA Northeastern Lumber Manufacturers' Association (207) 829-6901
www.nelma.org
NEMA National Electrical Manufacturers Association (703) 841-3200
www.nema.org
NETA InterNational Electrical Testing Association (888) 300-6382
www.netaworld.org (303) 697-8441
NFHS National Federation of State High School Associations (317) 972-6900
www.nfhs.org
NFPA NFPA (800) 344-3555
(National Fire Protection Association) (617) 770-3000
www.nfpa.org
NFRC National Fenestration Rating Council (301) 589-1776
www.nfrc.org
NGA National Glass Association (866) 342-5642
www.glass.org (703) 442-4890
NHLA National Hardwood Lumber Association (800) 933-0318
www.natlhardwood.org (901) 377-1818
NLGA National Lumber Grades Authority (604) 524-2393
www.nlga.org
NOFMA NOFMA: The Wood Flooring Manufacturers Association (901) 526-5016
(Formerly: National Oak Flooring Manufacturers Association)
www.nofma.com
NRCA National Roofing Contractors Association (800) 323-9545
www.nrca.net (847) 299-9070
NRMCA National Ready Mixed Concrete Association (888) 846-7622
www.nrmca.org (301) 587-1400
NSF NSF International (800) 673-6275
(National Sanitation Foundation International) (734) 769-8010
www.nsf.org
NSSGA National Stone, Sand & Gravel Association (800) 342-1415
www.nssga.org (703) 525-8788
NTMA National Terrazzo & Mosaic Association, Inc. (The) (800) 323-9736
www.ntma.com (540) 751-0930
NTRMA National Tile Roofing Manufacturers Association
(Now TRI)
NWWDA National Wood Window and Door Association
(Now WDMA)
OPL Omega Point Laboratories, Inc.
(Now ITS)
PCI Precast/Prestressed Concrete Institute (312) 786-0300
www.pci.org
PDCA Painting & Decorating Contractors of America (800) 332-7322
www.pdca.com (314) 514-7322
PDI Plumbing & Drainage Institute (800) 589-8956

www.pdionline.org (978) 557-0720
PGI PVC Geomembrane Institute (217) 333-3929
http://pgi-tp.ce.uiuc.edu
PLANET Professional Landcare Network (800) 395-2522
(Formerly: ACLA - Associated Landscape Contractors of America)
(703) 736-9666
www.landcarenetwork.org
PTI Post-Tensioning Institute (602) 870-7540
www.post-tensioning.org
RCSC Research Council on Structural Connections
www.boltcouncil.org
RFCI Resilient Floor Covering Institute (301) 340-8580
www.rfci.com
RIS Redwood Inspection Service (888) 225-7339
www.calredwood.org (415) 382-0662
SAE SAE International (877) 606-7323
www.sae.org (724) 776-4841
SDI Steel Deck Institute (847) 458-4647
www.sdi.org
SDI Steel Door Institute (440) 899-0010
www.steeldoor.org
SEFA Scientific Equipment and Furniture Association (516) 294-5424
www.sefalabs.com
SEI/ASCE Structural Engineering Institute/American Society of Civil Engineers
(See ASCE)
SGCC Safety Glazing Certification Council (315) 646-2234
www.sgcc.org
SIA Security Industry Association (703) 683-2075
www.siaonline.org
SIGMA Sealed Insulating Glass Manufacturers Association
(Now IGMA)
SJI Steel Joist Institute (843) 626-1995
www.steeljoist.org
SMA Screen Manufacturers Association (561) 533-0991
www.smacentral.org
SMACNA Sheet Metal and Air Conditioning Contractors' (703) 803-2980
National Association
www.smacna.org
SMPTE Society of Motion Picture and Television Engineers (914) 761-1100
www.smpte.org
SPFA Spray Polyurethane Foam Alliance (800) 523-6154
(Formerly: SPI/SPFD - The Society of the Plastics Industry, Inc.; Spray Polyurethane Foam Division)
www.sprayfoam.org
SPIB Southern Pine Inspection Bureau (The) (850) 434-2611
www.spib.org
SPRI Single Ply Roofing Industry (781) 647-7026
www.spri.org
SSINA Specialty Steel Industry of North America (800) 982-0355

www.ssina.com (202) 342-8630
SSPC SSPC: The Society for Protective Coatings (877) 281-7772
www.sspc.org (412) 281-2331
STI Steel Tank Institute (847) 438-8265
www.steeltank.com
SWI Steel Window Institute (216) 241-7333
www.steelwindows.com
SWRI Sealant, Waterproofing, & Restoration Institute (816) 472-7974
www.swrionline.org
TCA Tile Council of America, Inc. (864) 646-8453
www.tileusa.com
TIA/EIA Telecommunications Industry Association/Electronic Industries Alliance
(703) 907-7700
www.tiaonline.org
TMS The Masonry Society (303) 939-9700
www.masonrysociety.org
TPI Truss Plate Institute, Inc. (703) 683-1010
www.tpinst.org
TPI Turfgrass Producers International (800) 405-8873
www.turfgrasssod.org (847) 649-5555
TRI Tile Roofing Institute (312) 670-4177
www.tileroofing.org
UL Underwriters Laboratories Inc. (877) 854-3577
www.ul.com (847) 272-8800
UNI Uni-Bell PVC Pipe Association (972) 243-3902
www.uni-bell.org
USAV USA Volleyball (888) 786-5539
www.usavolleyball.org (719) 228-6800
USGBC U.S. Green Building Council (202) 828-7422
www.usgbc.org
USITT United States Institute for Theatre Technology, Inc. (800) 938-7488
www.usitt.org (315) 463-6463
WASTEC Waste Equipment Technology Association (800) 424-2869
www.wastec.org (202) 244-4700
WCLIB West Coast Lumber Inspection Bureau (800) 283-1486
www.wclib.org (503) 639-0651
WCMA Window Covering Manufacturers Association
(Now WCSC)
WCSC Window Covering Safety Council (800) 506-4636
(Formerly: WCMA - Window Covering Manufacturers Association)
(212) 297-2109
www.windowcoverings.org
WDMA Window & Door Manufacturers Association (800) 223-2301
(Formerly: NWWDA - National Wood Window and Door Association)
(847) 299-5200
www.wdma.com
WI Woodwork Institute (Formerly: WIC - Woodwork Institute of (916) 372-9943
California)

www.wicnet.org
WIC Woodwork Institute of California
(Now WI)
WMMPA Wood Moulding & Millwork Producers Association (800) 550-7889
www.wmmpa.com (530) 661-9591
WSRCA Western States Roofing Contractors Association (800) 725-0333
www.wsrca.com (650) 570-5441
WWPA Western Wood Products Association (503) 224-3930
www.wwpa.org

2. Code Agencies: Where abbreviations and acronyms are used in Specifications or other Contract Documents, they shall mean the recognized name of the entities in the following list. Names, telephone numbers, and Web sites are subject to change and are believed to be accurate and up-to-date as of the date of the Contract Documents.

BOCA BOCA International, Inc.
(See ICC)
IAPMO International Association of Plumbing and Mechanical Officials (909) 472-4100
www.iapmo.org
ICBO International Conference of Building Officials
(See ICC)
ICBO ES ICBO Evaluation Service, Inc.
(See ICC-ES)
ICC International Code Council (888) 422-7233
www.iccsafe.org (703) 931-4533
ICC-ES ICC Evaluation Service, Inc. (800) 423-6587
www.icc-es.org (562) 699-0543
SBCCI Southern Building Code Congress International, Inc.
(See ICC)
UBC Uniform Building Code
(See ICC)

3. Federal Government Agencies: Where abbreviations and acronyms are used in Specifications or other Contract Documents, they shall mean the recognized name of the entities in the following list. Names, telephone numbers, and Web sites are subject to change and are believed to be accurate and up-to-date as of the date of the Contract Documents.

CE Army Corps of Engineers
www.usace.army.mil
CPSC Consumer Product Safety Commission
www.cpsc.gov (301) 504-7923
DOC Department of Commerce (202) 482-2000
www.commerce.gov
DOD Department of Defense (215) 697-6257
http://.dodssp.daps.dla.mil

DOE Department of Energy (202) 586-9220
www.energy.gov
EPA Environmental Protection Agency (202) 272-0167
www.epa.gov
FAA Federal Aviation Administration (866) 835-5322
www.faa.gov
FCC Federal Communications Commission (888) 225-5322
www.fcc.gov
FDA Food and Drug Administration (888) 463-6332
www.fda.gov
GSA General Services Administration (800) 488-3111
www.gsa.gov
HUD Department of Housing and Urban Development (202) 708-1112
www.hud.gov
LBL Lawrence Berkeley National Laboratory (510) 486-4000
www.lbl.gov
NCHRP National Cooperative Highway Research Program
(See TRB)
NIST National Institute of Standards and Technology (301) 975-6478
www.nist.gov
OSHA Occupational Safety & Health Administration (800) 321-6742
www.osha.gov (202) 693-1999
PBS Public Building Service
(See GSA)
PHS Office of Public Health and Science (202) 690-7694
www.osophs.dhhs.gov/ophs
RUS Rural Utilities Service (202) 720-9540
(See USDA)
SD State Department (202) 647-4000
www.state.gov
TRB Transportation Research Board (202) 334-2934
http://gulliver.trb.org
USDA Department of Agriculture (202) 720-2791
www.usda.gov
USPS Postal Service (202) 268-2000
www.usps.com

4. Standards and Regulations: Where abbreviations and acronyms are used in Specifications or other Contract Documents, they shall mean the recognized name of the standards and regulations in the following list. Names, telephone numbers, and Web sites are subject to change and are believed to be accurate and up-to-date as of the date of the Contract Documents.

ADAAG Americans with Disabilities Act (ADA) (800) 872-2253
Architectural Barriers Act (ABA) (202) 272-0080
Accessibility Guidelines for Buildings and Facilities
Available from Access Board
www.access-board.gov
CFR Code of Federal Regulations (866) 512-1800
Available from Government Printing Office (202) 512-1800
www.gpoaccess.gov/cfr/index.html

DOD Department of Defense Military Specifications and Standards (215) 697-2664
Available from Department of Defense Single Stock Point
http://dodssp.daps.dla.mil
DSCC Defense Supply Center Columbus
(See FS)
FED-STD Federal Standard
(See FS)
FS Federal Specification (215) 697-2664
Available from Department of Defense Single Stock Point
http://dodssp.daps.dla.mil
Available from Defense Standardization Program
www.dps.dla.mil
Available from General Services Administration (202) 619-8925
www.gsa.gov
Available from National Institute of Building Sciences (202) 289-7800
www.wbdg.org/ccb
FTMS Federal Test Method Standard (See FS)
MIL (See MILSPEC)
MIL-STD (See MILSPEC)
MILSPEC Military Specification and Standards (215) 697-2664
Available from Department of Defense Single Stock Point
http://dodssp.daps.dla.mil
UFAS Uniform Federal Accessibility Standards (800) 872-2253
Available from Access Board (202) 272-0080
www.access-board.gov

5. State Government Agencies: Where abbreviations and acronyms are used in Specifications or other Contract Documents, they shall mean the recognized name of the entities in the following list. Names, telephone numbers, and Web sites are subject to change and are believed to be accurate and up-to-date as of the date of the Contract Documents.

CBHF State of California, Department of Consumer Affairs Bureau of Home Furnishings and Thermal Insulation
(800) 952-5210
www.dca.ca.gov/bhfti (916) 574-2041
CCR California Code of Regulations (916) 323-6815
www.calregs.com
CPUC California Public Utilities Commission (415) 703-2782
www.cpuc.ca.gov
TFS Texas Forest Service (979) 458-6650
Forest Resource Development
http://txforestservice.tamu.edu

PART 2 - PRODUCTS (Not Used)

PART 3 - EXECUTION (Not Used)

END OF SECTION 01320c

SECTION 01320b

CUTTING AND PATCHING

1.1 GENERAL

A. Description of Work
1. This specification covers the furnishing and installation of materials for cutting and patching. Products shall be as follows or as directed by the Owner. Installation procedures shall be in accordance with the product manufacturer's recommendations. Demolition and removal of materials shall be as required to support the work.

B. Summary
1. This Section includes procedural requirements for cutting and patching.

C. Definitions
1. Cutting: Removal of in-place construction necessary to permit installation or performance of other Work.
2. Patching: Fitting and repair work required to restore surfaces to original conditions after installation of other Work.

D. Submittals
1. Cutting and Patching Proposal: Submit a proposal describing procedures at least 10 days before the time cutting and patching will be performed, requesting approval to proceed. Include the following information:
a. Extent: Describe cutting and patching, show how they will be performed, and indicate why they cannot be avoided.
b. Changes to In-Place Construction: Describe anticipated results. Include changes to structural elements and operating components as well as changes in building's appearance and other significant visual elements.
c. Products: List products to be used and firms or entities that will perform the Work.
d. Dates: Indicate when cutting and patching will be performed.
e. Utility Services and Mechanical/Electrical Systems: List services/systems that cutting and patching procedures will disturb or affect. List services/systems that will be relocated and those that will be temporarily out of service. Indicate how long services/systems will be disrupted.
f. Structural Elements: Where cutting and patching involve adding reinforcement to structural elements, submit details and engineering calculations showing integration of reinforcement with original structure.
g. the Owner's Approval: Obtain approval of cutting and patching proposal before cutting and patching. Approval does not waive right to later require removal and replacement of unsatisfactory work.

E. Quality Assurance
1. Structural Elements: Do not cut and patch structural elements in a manner that could change their load-carrying capacity or load-deflection ratio.
2. Operational Elements: Do not cut and patch operating elements and related components in a manner that results in reducing their capacity to perform as intended or

that results in increased maintenance or decreased operational life or safety. Operating elements include the following:

a. Primary operational systems and equipment.
b. Air or smoke barriers.
c. Fire-suppression systems.
d. Mechanical systems piping and ducts.
e. Control systems.
f. Communication systems.
g. Conveying systems.
h. Electrical wiring systems.
i. Operating systems of special construction in Division 13.

4. Miscellaneous Elements: Do not cut and patch miscellaneous elements or related components in a manner that could change their load-carrying capacity, that results in reducing their capacity to perform as intended, or that results in increased maintenance or decreased operational life or safety. Miscellaneous elements include the following:

a. Water, moisture, or vapor barriers.
b. Membranes and flashings.
c. Exterior curtain-wall construction.
d. Equipment supports.
e. Piping, ductwork, vessels, and equipment.
f. Noise- and vibration-control elements and systems.

5. Visual Requirements: Do not cut and patch construction in a manner that results in visual evidence of cutting and patching. Do not cut and patch construction exposed on the exterior or in occupied spaces in a manner that would, in Architect's opinion, reduce the building's aesthetic qualities. Remove and replace construction that has been cut and patched in a visually unsatisfactory manner.

6. Cutting and Patching Conference: Before proceeding, meet at Project site with parties involved in cutting and patching, including mechanical and electrical trades. Review areas of potential interference and conflict. Coordinate procedures and resolve potential conflicts before proceeding.

F. Warranty

1. Existing Warranties: Remove, replace, patch, and repair materials and surfaces cut or damaged during cutting and patching operations, by methods and with materials so as not to void existing warranties.

1.2 PRODUCTS

A. Materials

1. General: Comply with requirements specified in other Sections.
2. In-Place Materials: Use materials identical to in-place materials. For exposed surfaces, use materials that visually match in-place adjacent surfaces to the fullest extent possible.

a. If identical materials are unavailable or cannot be used, use materials that, when installed, will match the visual and functional performance of in-place materials.

1.3 EXECUTION

A. Preparation
1. Temporary Support: Provide temporary support of Work to be cut.
2. Protection: Protect in-place construction during cutting and patching to prevent damage. Provide protection from adverse weather conditions for portions of Project that might be exposed during cutting and patching operations.
3. Adjoining Areas: Avoid interference with use of adjoining areas or interruption of free passage to adjoining areas.
4. Existing Utility Services and Mechanical/Electrical Systems: Where existing services/systems are required to be removed, relocated, or abandoned, bypass such services/systems before cutting to minimize OR prevent, as directed, interruption to occupied areas.

B. Performance
1. General: Employ skilled workers to perform cutting and patching. Proceed with cutting and patching at the earliest feasible time, and complete without delay.
a. Cut in-place construction to provide for installation of other components or performance of other construction, and subsequently patch as required to restore surfaces to their original condition.
2. Cutting: Cut in-place construction by sawing, drilling, breaking, chipping, grinding, and similar operations, including excavation, using methods least likely to damage elements retained or adjoining construction. If possible, review proposed procedures with original Installer; comply with original Installer's written recommendations.
a. In general, use hand or small power tools designed for sawing and grinding, not hammering and chopping. Cut holes and slots as small as possible, neatly to size required, and with minimum disturbance of adjacent surfaces. Temporarily cover openings when not in use.
b. Finished Surfaces: Cut or drill from the exposed or finished side into concealed surfaces.
c. Concrete and Masonry: Cut using a cutting machine, such as an abrasive saw or a diamond-core drill.
d. Excavating and Backfilling: Comply with requirements in applicable Division 02 where required by cutting and patching operations.
e. Mechanical and Electrical Services: Cut off pipe or conduit in walls or partitions to be removed. Cap, valve, or plug and seal remaining portion of pipe or conduit to prevent entrance of moisture or other foreign matter after cutting.
f. Proceed with patching after construction operations requiring cutting are complete.
3. Patching: Patch construction by filling, repairing, refinishing, closing up, and similar operations following performance of other Work. Patch with durable seams that are as invisible as possible. Provide materials and comply with installation requirements specified in other Sections.
a. Inspection: Where feasible, test and inspect patched areas after completion to demonstrate integrity of installation.
b. Exposed Finishes: Restore exposed finishes of patched areas and extend finish restoration into retained adjoining construction in a manner that will eliminate evidence of patching and refinishing.
1) Clean piping, conduit, and similar features before applying paint or other finishing materials.
2) Restore damaged pipe covering to its original condition.
c. Floors and Walls: Where walls or partitions that are removed extend one finished area into another, patch and repair floor and wall surfaces in the new space. Provide an

even surface of uniform finish, color, texture, and appearance. Remove in-place floor and wall coverings and replace with new materials, if necessary, to achieve uniform color and appearance.

1) Where patching occurs in a painted surface, apply primer and intermediate paint coats over the patch and apply final paint coat over entire unbroken surface containing the patch. Provide additional coats until patch blends with adjacent surfaces.

d. Ceilings: Patch, repair, or rehang in-place ceilings as necessary to provide an even-plane surface of uniform appearance.

e. Exterior Building Enclosure: Patch components in a manner that restores enclosure to a weather-tight condition.

4. Cleaning: Clean areas and spaces where cutting and patching are performed. Completely remove paint, mortar, oils, putty, and similar materials.

END OF SECTION 01320b

SECTION 01320c

ABBREVIATIONS, ACRONYMS, DEFINITIONS, AND SYMBOLS

1.1 GENERAL

A. Description Of Work
1. This specification covers abbreviations, acronyms, definitions, and symbols used in the Contract Documents.

B. Unit of Measure Definitions
1. Following is a list of Industry Standard abbreviations.

A Area Square Feet;
Ampere
AB Anchor Bolt
ABC Aggregate Base Course
ABS Acrylonitrile Butadiene Styrene
AC Alternating Current;
Air-Conditioning;
Asphaltic Concrete;
Plywood Grade A & C
ACFM Actual Cubic Feet Per Minute
ACM Asbestos Containing Material
ACP Asphaltic Concrete Paving
ACR Acre
AD Plywood, Grade A & D
ADDL Additional
ADJ Adjustable
ADMIN Administer; Administration
AGG Aggregate
AH Ampere Hours
AHM Ampere-Hour Meter
AHU Air Handling Unit
AIC Amperes Interrupting Capacity
AL Aluminum
ALT Alternate
AMP Ampere
AMT Amount
AOT Adjusted Oxygen Transfer
APP Attactic Polypropylene
APPROX Approximate
Apt. Apartment
ART Articulated
ASB Asbestos
ASJ All Surface Jacketing
Avg. Average
AWG American Wire Gauge
BAG Bag
BBL Barrel
B&B Grade B and Better;

Balled & Burlapped
B&S Bell and Spigot
B&W Black and White
BC Between Centers
BCY Bank Cubic Yard
BDL Bundle
BD FT Board Feet
BEV Bevel/Beveled
BF Board Feet
BFP Boiler Feed Pump
BHN Brinell Hardness Number
BHP Boiler Horsepower;
Brake Horsepower
BI Black Iron
Bit. Bituminous
Bitum. Bituminous
Bk. Backed
Brkrs. Breakers
Bldg. Building
BLK Black; Block
BM Bank Measure; Beam
BOD Biochemical Oxygen Demand
BOX Box (each)
BR Bedroom
Brg. Bearing
BRK Brick
BTFLY VLV Butterfly Valve
BTR Better (Lumber)
BTU British Thermal Units
BTU/HR British Thermal Units per Hour
BUR Built Up Roof
BW Butt Weld
BWG Birmingham Wire Gauge
BX Interlocked Armored Cable
C Centigrade; Conductance;
Conductivity, Hundred
CA Corrosion Allowance
Cab. Cabinet
CAP Capacity
CB Circuit Breaker
CC Center to Center
CCA Chromate Copper Arsenate
CCF Hundred Cubic Feet
CCY Compacted Cubic Yard
cd Candela
cd/sf Candela per Square Foot
CF Cubic Foot (Feet)
CFM Cubic Feet per Minute
CHG Charge
CHW Chilled Water;
Commercial Hot Water

CI Cast Iron
CIP Cast in Place; Cast Iron Pipe
CIRC Circulating; Circuit
CLF Hundred Linear Feet;
Current Limiting Fuse
CLP Cross Linked Polyethylene
cm Centimeter
CMP Corrugated Metal Pipe
CMPA Corrugated Metal Pipe - Arched
CMU Concrete Masonry Unit
CO Carbon Monoxide
CO2 Carbon Dioxide
COL Column
Comb Combination
Compr Compressor
CONC Concrete
CONSTR Construction
Cont Continuous; Continued
Corr Corrugated
CP Chrome Plated
CPE Chlorinated Polyethylene
Cplg. Coupling
CPM Cycles per Minute
CPM Critical Path Method
CPS Centipoise
CPRSR Compressor
CPVC Chlorinated Polyvinyl Chloride
CS Carbon Steel
CSF Hundred Square Feet
CSPE ChloroSulphinated Polyethylene
CSS Cast Semi Steel
CT Current Transformer
CTB Cement Treated Base
CTR Center
CU FT Cubic Foot
CU IN Cubic Inch
CU YD Cubic Yard
CW Chilled Water; Cold Water
CWR Chilled Water Return
CWS Chilled Water Supply
CWT Hundred Weight
CY Cubic Yard (27 cu. ft.); Cycle
CYH Cubic Yards Per Hour
Cyl Cylinder
d Penny (nail size)
D Deep; Depth; Discharge
Dis. Discharge
Disch. Discharge
DB Dry Bulb; Decibel
DBL Double
DC Direct Current

DCS Distributed Control System
DDC Direct Digital Control
Demob Demobilization
DF Douglas Fir
DFT Dry Film Thickness
DH Double Hung
DHW Domestic Hot Water
DI Ductile Iron
D/P Differential Pressure
DIA Diameter
Diam Diameter
Diag. Diagonal
Distrib. Distribution
DL Dead Load; Diesel
DLH Deep Long Span Bar Joist
DPST Double Pole, Single Throw
DS Double Strength
DSA Double Strength A Quality Glass
DSB Double Strength B Quality Glass
DWV Drain, Waste, Vent Piping
DX Deluxe White, Direct Expansion
dyn Dyne
e Eccentricity
E Electrical Grade (Fiberglass Construction)
EA Each
Econ. Economy
ECR Electrical Grade, Corrosion Resistant
(Fiberglass Construction)
EDP Electronic Data Processing
EDR Equiv. Direct Radiation
EG Electro Galvanized
EIFS Exterior Insulation Finish System
ELEC Electric; Electrical
Elev. Elevator; Elevating
EM Electron Microscopy
EMT Electric Metallic Tubing; Thin Wall Conduit
Eng. Engine, Engineered
EPDM Ethylene Propylene Diene Monomer
EPS Expanded Polystyrene
EQL Equally
Equip. Equipment
ERW Electrical Resistance Welded
EROPS Enclosed Roll Over Protection System
ES Energy Saver
Est. Estimated
EW Each Way
EWT Entering Water Temperature
Excav. Excavation
EXH Exhaust
Exp. Expansion; Exposure
EXP JT Expansion Joint

Ext. Exterior
F Fahrenheit; Female; Fill
f Fiber stress
fc Compressive Stress in Concrete
fy Minimum Yield Stress of Steel
f'm Compressive Strength of Masonry
F&D Flanged-and-Dished
F&I Furnished and Installed
Fab. Fabricated
FAD Free Air Delivery
FBGS Fiberglass
FC Footcandles
FCXP Fan Cooled Explosion Proof
FDA Food and Drug Administration
FEP Fluorinated Ethylene Propylene (Teflon)
FF Flat Face
Fig. Figure
Fin. Finished
FL Full Load
FLDG Folding
Fl. Oz. Fluid Ounces
Flr. Floor
FM Frequency Modulation;
Factory Mutual
Frmg. Framing
Fndtn. Foundation
FT Foot, Feet
FTNG(S) Fitting(s)
FLG Flange
FOB Freight on Board
Fount. Fountain
FPM Feet Per Minute
FPS Feet Per Second
FPT Female Pipe Thread
FRP Fiberglass Reinforced Plastic
FS Forged Steel
FSC Cast Body, Cast Switch Box
Ftg. Footing
Ft. Lb. Foot Pound
Furn. Furniture
FVNR Full Voltage Non-Reversing
FXM Female by Male
G Gravity
g Gram
GA Gauge or Gage
G & A General and Administrative
GAL Gallon
Gal./Min. Gallon per Minute
GALV Galvanized
GBSD Gear Box Sheave Diameter
Gen. General

GFCI Ground Fault Circuit Interrupter
GFR Ground Fault Relay
GPD Gallons per Day
GPH Gallon per Hour
GPM Gallon per Minute
GR Grade
Grnd. Ground
GSF Ground Square Foot
GVW Gross Vehicle Weight
H High, Height; High Strength Bar Joist
HC Handicapped; High Capacity
HD High Density; Heavy Duty
HDO High Density Overlay
HDPE High Density Polyethylene
Hdr. Header
Hdw. Hardware
HEPA High Efficiency Particulate Air
Hg Mercury
HIC High Interrupting Capacity
HM Hollow Metal
HNDL Handle
HO High Output; Heel Outlet
Horiz. Horizontal
HP High Pressure;Horse Power
HPF High Pressure Factor
HPL High Pressure Laminate
HR Hour
HRS Hot-Rolled Steel
HS High Speed; High Strength
HSC High Short Circuit
HSLA High Strength Low Alloy
HT Hospital Tips; Height
Htg. Heating
Htrs. Heaters
HVAC Heating, Ventilating & Air Conditioning
Hvy. Heavy
HW Hot Water
HWR Hot Water Return
HWS Hot Water Supply
HWT Hundred Carton Weight
Hyd. Hydraulic
Hydr. Hydraulic
HZ Hertz (cycles)
I Moment of Inertia
IC Interrupt Capacity
ICFM Inlet Cubic Feet per Minute
ID Inside Diameter
I.D. Identification; Inside Dimension
IF Inside Frosted
IMC Intermediate Metal Conduit
IN Inch

IN LB Inch Pound
IN WC Inches Water Column
Incan. Incandescent
Incl. Include, Including
Inst. Install, Installation
Insul. Insulation, Insulated
Int. Interior
INTSCT Intersect
IP Iron Pipe
IPS International Pipe Standard
Iron Pipe Size
Inches per Second
IPT Iron Pipe Threaded
ISP Inlet Steam Pressure
IW Indirect Waste
J Joule
JOB Job
JOC Job Order Contracting
JT Joint
K Thousand; Thousand Pounds;
Heavy Wall Copper Tubing; Kelvin
KAH Thousand Amp Hours
KD Kiln Dried; Knocked Down
KDAT Kiln Dried After Treatment
Kip 1000 Pounds
KO Knockout
Km Kilometer
KLF Kips per Linear Foot
KSF Kips per Square Foot
KSI Kips per Square Inch
kA KiloAmp
kg Kilogram
kHz Kilohertz
kJ Kilojoule
kV Kilovolt
kVA Kilovolt Ampere (1,000 volt amps)
KVAR Kilovar (Reactance)
kW Kilowatt
kWh Kilowatt Hour
L Length; Long;
Medium Wall Copper Tubing
L&E Labor and Equipment
LAB Labor
LAN Lane
LAT Latitude
LAV Lavatory
L.B. Load Bearing; L Conduit Body
LB Pound (Force or Mass)
LB/HR Pounds per Hour
LBS Pounds
LBSF Pounds per Square Foot

LCD Liquid Crystal Display
LCL Less Than Carload Lot
LCY Loose Cubic Yard
LE Leading Edge; Lead Equivalent
LED Light Emitting Diode
LEL Lower Explosive Limit
LF Linear Foot
LFD Linear Feet Per Day
LFTL Lineal Feet Tube Length
Lge. Large; Long
LH Labor Hours; Long Span Bar Joist
LIN Linear
LL Live Load
LLD Lamp Lumen Depreciation
LNG Liquid Natural Gas
LOA Length Over All
L-O-L Lateralolet
LP(G) Liquid Propane (Gas)
LS Low Speed; Lump Sum
Lt Light
Lt Ga Light Gauge
LTL Less than Truck Load
Lt Wt Light Weight
LV Low Voltage
lm Lumen
lm/sf Lumen per square foot
lm/W Lumen per Watt
m Meter
m3/H Cubic Meters per Hour
mA Milliampere
m/S Meters per Second
M Thousand; Male;
Light Wall Copper Tubing
MATL Material
MAX Maximum
Mach Machine
Mag. Str. Magnetic Starter
Maint. Maintenance
Mat Material
Mat'l; Material
Max. Maximum
Mb Million Bytes (characters(
MBF Thousand Board Feet
MBH Thousand BTU per Hour
MBtu Thousand British Thermal Units
MC Metal Clad Cable
MCF Thousand Cubic Feet
MCM Thousand Circular Mills
MCP Motor Circuit Protector
MD Medium Duty
MDO Medium Density Overlaid

Med. Medium
MF Thousand Feet
MF3 Thousand Cubic Feet
Mfg. Manufacturing
Mfrs. Manufacturers
Mg Milligram
MG Market Grade
MGD Million Gallons per Day
MGPH Thousand Gallons per Hour
MH Manhole; Manhour; Metal Halide
MHz MegaHertz
Mi Mile
MI Malleable Iron; Mineral Insulated
MIN Minimum; Minute
MISC Miscellaneous
ml Milliliter; Mainline
MLF Thousand Linear Feet
mm Millimeter
MO Month
Mobil. Mobilization
Mog. Mogul Base
MPH Miles Per Hour
MPT Male Pipe Thread
MRT Mile Round Trip
ms Millisecond
MSD Motor Sheave Diameter
MSF Thousand Square Feet
MSY Thousand Square Yards
MT Mount
MTD Mounted
MTG Mounting
MTR Mill Test Report
MVA Million Volt Ampere
MVAR Million Volt Amperes Reactance
MV Megavolt
MW Megawatt
MXM Male by Male
MYD Thousand Yards
N Natural; North
nA Nanoampere
NA Not Applicable
NC Normally Closed
NEHB Bolted Circuit Breaker to 600V
NDT Non Destructive Testing
NIOSH National Alloy
NLB Non-Load Bearing
NM Non-Metallic Cable
nm Nanometer
NO Normally Open
No. Number
NOM Nominal

NQOD Combination Plug-on/Bolt-on Circuit Breaker to 240V
NRC Noise Reduction Coefficient
NPT National Pipe Thread
NPS Nominal Pipe Size
NRP Non-Removable Pins
NRS Non-Rising Stem
ns Nanosecond
NTE Note
NTP National Taper Pipe (Thread)
nW Nanowatt
OAL Overall Length
OB Opposing Blade
OC On Center
OD Outside Diameter
O.D. Outside Dimension
ODP Open Drip Roof
ODS Overhead Distribution System
OEM Original Equipment Manufacturer
OG Ogee
OH Overhead
OH&P Overhead and Profit
OHL Over Hung Load
Oper. Operator
Opng. Opening
OPR Operating
Orna. Ornamental
OSA Outside Air
OSB Oriented Strand Board
OS & Y Outside Screw and Yoke
OUT Outlet or Output (each)
Ovhd. Overhead
OWG Oil, Water or Gas
OWSJ Open Web Steel Joist
OZ Ounce
P Pole; Applied Load; Projection
p Page
pp Pages
PAPR Powered Air Purifying Respirator
PAR Weatherproof Reflector
PB Push Button
PC Personal Computer; Piece;
PCs Pieces
P.C. Portland Cement; Power Connector
PCF Pounds per Cubic Foot
PCM Phase Contrast Microscopy
PE Professional Engineer; Plain End
Porcelain Enamel; Polyethylene;
PERF Perforated
PH Phase
PI Pressure Injected

PID Programmable Integral Derivative Controller
PKG Package
PL Plate
PLC Programmable Loop Controller
PLM Polarized Light Microscopy
PLTC Power Limited Tray Cable
PLY Plywood
PNEU Pneumatic
PNTD Painted
POA Priced On Application/Priced On Approval
PESB Pre-engineered Steel Building
PPD Pounds Per Day
PP; PPL Polypropylene
PPM Parts Per Million
PPS Polyphenylene Sulfide
PR Pair
Prefab. Prefabricated
Prefin. Prefinished
PROGEN® Proposal Generator Software for
Job Order Contracting
PROP Propelled; Propeller
PSF Pounds Per Square Foot
PSI Pounds Per Square Inch
PSIA Pounds Per Square Inch Atmosphere
PSIG Pounds Per Square Inch Gauge
PSP Plastic Sewer Pipe
PT Power or Potential Transformer
Pt. Pint
Ptns. Partitions
P&T Pressure & Temperature
PTFE Polytetrafluoroethylene
Pu Ultimate Load
PV Photovoltaic
PVA Polyvinyl Acrylate
PVC Polyvinyl Chloride
PVDC Polyvinylidene Chloride
PVDF Polyvinylidene Fluoride
PVF Polyvinyl Fluoride
Pvmt. Pavement
PVQ Pressure Vessel Quality
Pwr. Power
Q Quantity Heat Flow
QA Quality Assurance
QC Quality Control; Quick Coupling
QT Quart
Quan. Quantity
Qty. Quantity
R Thermal Resistance
R/L Random Lengths
R/W/L Random Widths and Lengths
RA Return Air; Registered Architect

RCP Reinforced Concrete Pipe
Rect. Rectangle
REINF Reinforced/Reinforcing
Req'd Required
RF Raised Face
RGH Rough
RGS Rigid Galvanized Steel
RH Relative Humidity
RHW Rubber, Heat & Water Resistant;
Residential Hot Water
rms Root Mean Square
RND Round
ROL Roll (each)
ROM Room
ROPS Roll Over Protection System
ROW Row
R.O.W. Right of Way
RPM Revolutions Per Minute
RR Direct Burial Feeder Conduit
RS Rapid Start
RSC Rigid Steel Conduit
RSR Riser (Per Rise)
RT Round Trip
RTD Resistance Temperature Detector
RTJ Ring Type Joint
RTRP Reinforced Thermoset Resin Piping
RVT Reinforced Vinyl Tile
S Suction; Single Entrance; South
S1S2E Surfaced 1 side, 2 Edges
S2S Surfaced 2 Sides
S4S Surfaced 4 Sides
Sa Sack
SA Supply Air
SBS Styrene Butyl Styrene
Scaf. Scaffolding
SCFH Standard Cubic Foot Per Hour
SCFM Standard Cubic Foot per Minute
SCH Schedule
SCR Modular Brick
SCRD Screwed
SD Sound Deadening
SDR Standard Dimension Brick;
Size To Diameter Ratio
SE Surfaced Edge; Semi-Elliptical
SEA Seat
SER Service Entrance Cable
SEU Service Entrance Cable
SET Set
SF Square Foot/Feet
SFCA Square Feet of Form in Contact with
Concrete

SHTS Sheets
SI Square Inch
SIS Synthetic Heat-Resistant
SLDR Solder
SLH Super Long Span Bar Joist
SN Solid Neutral
S-O-L Socketolet
SP Self-Propelled; Single Pole;
Space; Standpipe
Static Pressure (measured in inches of water);
SPDT Single Pole, Double Throw
SPGR Specific Gravity
SPWG Static Pressure Water Gauge
SQ Square;
Hundred Square Feet (10' x 10' area)
SQ FT Square Foot/Square Feet
SQ IN Square Inch
SQ YD Square Yard
SS Stainless Steel; Single Strength
SSB Single Strength B Quality Glass
SSL Self Sealing Lap
STC Sound Transmission Class
STD Standard
STK Select Tight Knot
STP Stop (each);
Standard Temperature & Pressure
SURF Surface
STL Steel
SURF Surface
SW Seam Weld
SW Switch
SWBD Switchboard
SWS Segmentally Welded Steel
SWSI Single Width, Single Inlet
SY Square Yard
SYN Synthetic
SYP Southern Yellow Pine
SYS System
T Thick; Temperature; Ton
T&C Threaded and Coupled
T&G Tongue and Grove
TBC Tensile Bolt Cloth
TBE Threaded Both Ends
TC Terra Cotta
TDS Total Dissolved Solids
TEAO Totally Enclosed Air Over
TEFC Totally Enclosed Fan Cooled
TETC Totally Enclosed Tube Cooled
TFE Tetrafluoroethylene (Teflon)
THHN Nylon Jacketed Wire

THK Thick
THKNS Thickness
THW Insulated Strand Wire
THWN Nylon Jacketed Wire
TI Titanium
TL Truckload
TM Track Mounted
T-O-L Threadolet
TON Ton
Tot. Total
TPH Tons Per Hour
Transf. Transformer
TSHP Total Shaft Horse Power
T'STAT Thermostat
TV Television
TW Thermoplastic Water Resistant Wire
UA Unequal Angle
UCI Uniform Construction Index
UF Underground Feeder
UHF Ultra High Frequency
UI United Inch
UNC Unified Coarse (Threads)
USP United States Primed
UTP Unshielded Twisted Pair
UV Under Voltage
V Volt
VA Volt Amperes
VAV Variable Air Volume
VCT Vinyl Composition Tile
Vert. Vertical
VF Vinyl Faced
VHF Very High Frequency
VLF Vertical Linear Foot
VLV Valve
Vol. Volume
VRP Vinyl Reinforced Polyester
w/ With
W Watt; Width; Wire; West
WB Wet Bulb
WC Water Column; Water Closet
WF Wide Flange
WG Water Gauge
WHM Watthour Meter
WK Week
Wldg. Welding
WOG Water, Oil, Gas
W-O-L Weldolet
WP Weather Protected
WR Water Resistant
WSP Water, Steam, Petroleum
WT Weight

WWF Welded Wire Fabric
X or x By or Times
XFER Transfer
XFMR Transformer
XHD Extra Heavy Duty
XHHW; XLPE Cross-Linked Polyethylene Wire Insulation
XLP Cross-Linked Polyethylene
XP Explosion Proof
Y Wye
YD Yard
YR Year

2. Symbols

Δ Delta / per-through or to
@ at
% per 100 or percent
$ U.S. dollars
~ Approximate
Ø Phase
' feet
" inches
pound or number
° degree
< Less Than
> Greater Than

3. Explanation Of Terms

BTU: Stands for British Thermal Unit. The BTU number indicates the amount of heat required to raise one pound of water by one degree Fahrenheit. What this means is the higher the BTU rating, the higher the heating capacity of a product.
MBH: Equal to 1000 BTUs. Tons (In Reference To Cooling): Unit of measurement for determining cooling capacity. One ton equals 12,000 BTUH.
SEER: Stands for Seasonal Energy Efficiency Ratio. This measures the cooling efficiency in air conditioners or heat pumps. The higher the SEER rating, the more energy-efficient the unit. The government's minimum SEER rating is 10.

4. Calculation Of Board Feet

a. All Lumber Grades Are Presumed To Be 75 Percent Construction And 25 Percent Standard Or Equivalent Grade Unless Otherwise Listed. Dimensions Are Nominal. Board Foot Is Defined As 1" x 12" x 1' Long; To Calculate BF/LF, Multiply The Size Of The Board Height x Width/12.

1) 1"x2" = 0.167 BF/LF
2) 1"x3" = 0.25 BF/LF
3) 2"x3" = 0.5 BF/LF
4) 2"x4" = 0.667 BF/LF
5) 2"x6" = 1.0 BF/LF
6) 2"x8" = 1.333 BF/LF
7) 2"x10" = 1.667 BF/LF

8) 2:x12" = 2.0 BF/LF
9) 4"x4" = 1.333 BF/LF
10) 6"x4" = 2.0 BF/LF
11) 6"x6" = 3.0 BL/LF
12) 8"x8" = 5.333 BF/LF
13) etc.

b. To Calculate Board Feet;
1) For most lumber: Thickness (inches) x width (inches) x length (feet) divided by 12 = board feet.
2) For small pieces: Thickness (inches) x width (inches) x length (inches) divided by 144 = board feet.

1.2 PRODUCTS (Not Used)

1.3 EXECUTION (Not Used)

END OF SECTION 01320c

SECTION 01326

CONSTRUCTION SCHEDULING

1.1 GENERAL

A. SUMMARY
1. This section covers provision for construction schedules and supplements provisions of the General Conditions.
2. The building must remain open and unobstructed during normal work hours. All work must be done in the evenings and weekends.

B. FORM OF SCHEDULES:
1. Prepare in form of "Critical Path Method" schedule for all portions of the Work
   a. Provide separate horizontal breakdown of each trade or operation
   b. Order: Chronological order of beginning of each item of work
   c. Identify each item of work:
      1) By major specification section number
      2) By logically grouped activities
   d. Horizontal time scale: Identify first work day of each week
   e. Scale and spacing: Allow space for updating

C. CONTENT OF SCHEDULES:
1. Provide complete sequence of construction by activity:
   a. Shop drawings, product data and samples:
      1) Submittal data
      2) Status of each submittal relative to Contractor's Submittal Schedule
   b. Decision Dates for selection of finishes
   c. Product procurement and delivery dates
   d. Dates for beginning and completion of each element of construction
2. Show projected percentage of completion for each element of construction.
3. Provide sub-schedules to define critical portions of work.

D. UPDATING:
1. Show all changes since previous submittal of updated schedule.
2. Indicate progress of each activity, show completion dates. Include the following:
   a. Major changes in scope
   b. Activities modified since previous updating
   c. Revised projections due to changes
   d. Other identifiable changes
3. Provide narrative report, including:
   a. Discussion of problem areas, including current and anticipated delay factors and their impact
   b. Corrective action taken, or proposed, and its effect.
   c. Description of revisions:

1) Effect on schedule to change scope
2) Revision in duration of activities
3) Other changes that may affect schedule

E. SUBMITTALS:
1. Submit initial schedule at least five (5) calendar days prior to re-construction conference
2. Submit updated schedules accurately depicting progress to first day of each month
3. Submit one reproducible transparency for Architect's information.
4. Distribute reviewed schedules to:
   a. Owner
   b. Job site file
   c. Subcontractors
   d. Architect

F. PRODUCTS (NOT USED)

F. EXECUTION (NOT USED)

END OF SECTION 01326

SECTION 01330

SUBMITTALS

1.1 GENERAL

A. SUMMARY

1. Definitions:
   a. Submittals: General term including samples, shop drawings and product data, as applicable.
   b. Shop drawings: Drawings, diagrams, schedules and other data specially prepared for the Work by the Contractor or a Subcontractor, Sub-subcontractor, manufacturer, supplier or distributor to illustrate some portion of the Work.
   c. Product data: Illustrations, stand schedules, performance charts, instruction, brochures, diagrams and other information furnished by the Contractor to illustrate materials or equipment for some portion of the work.
   d. Samples: Physical examples which illustrate materials, equipment or workmanship and establish standards by which the Work will be judged.
2. Shop Drawings, product data, samples and similar submittals are not Contract Documents. The purpose of their submittal is to demonstrate for those portions of the Work for which submittals are required the way the Contractor proposes to conform to the information given and the design concept expressed in the Contract Documents.
3. General provisions:
   a. Provisions in this section are mandatory procedures for preparing and submitting samples, shop drawings and product data
   b. Submittals shall be in orderly sequence and times to cause no delay in the Work.
   c. Job delays occasioned by requirement of resubmission of samples, shop drawings, and product data not in accord with Contract Documents are Contractor's responsibility and will not be considered valid justification for extension of Contract time.
   d. Commence no portion of work requiring submittals until submittal has been approved and stamped by Architect.
4. Informational Submittals: (FIO - Submittals required to be submitted "For Architect's Information Only") FIO are required to demonstrate that Work complies with performance requirements of Contract Documents.
   a. Calculations, certifications and test reports are submitted for record purposes and Architect's information only and will not be approved by Architect.
      1) Include calculations and required information if not completely covered by load tables and products data.
   b. Information Submittals, if acceptable to Architect, will not be returned to Contractor.
   c. Submittals may be rejected for not complying with requirements.

B. SUBMITTAL SCHEDULE:
1. At least five (5) days prior to date of pre-construction conference, submit a list of all required submittals, by specification section. Indicate timing for submission of required submittals and relation to construction sequence.
2. During course of the Work, maintain an updated submittal schedule showing status of all submittals. Provide copies for Architect's information at project meetings and at other times when requested.

C. SAMPLE PREPARATION:
1. Prepare samples in sizes, shapes and finishes in accord with provision of individual specification sections.
2. Samples submitted for color, sheen or texture selection for approval shall be actual samples of the required material. Where a range of color, sheen or texture is anticipated or proposed, samples shall indicate full range proposed, from which Architect may select the exact range to be provided.
3. Samples furnished under this section are not to be confused with full size, on-the-site "mock-ups" or "sample panels" called for in some specification sections.
4. The number of samples submitted shall be the number required by Contractor, plus one which will be retained by Architect, unless otherwise indicated.
5. Attach a tag to each sample, sized to accept Contractor's and Architect's stamps. Samples submitted to Architect shall have tag stamped with Contractor's stamp and appropriate action shall be indicated thereon.

D. SHOP DRAWING PREPARATION:

1. Drawings shall conform to the following requirements:
   a. Number drawings consecutively
   b. Indicate working and erection dimensions and relationships to adjacent work
   c. Show arrangements and sectional views, where applicable.
   d. Indicate material, gauges, thicknesses, finishes and characteristics
   e. Indicate anchoring and fastening details, including information for making connections to adjacent work
   f. Contract documents prepared by the Architect and his consultants will not be acceptable as shop drawing submittals
2. Form: Submit three blue and black line bond prints of shop drawings.

E. PRODUCT DATA PREPARATION:
1. Include product manufacturer's standard printed material, dated, with product description and installation instructions indicated. Product data may also contain test and performance data, illustrations and special details.

2. Form: Number of copies submitted shall be the number require by Contractor, plus two which will be retained by Architect.
3. Identify each product data item with specification section and paragraph number. Data not related to this project shall be deleted from manufacturer's standard product data.

F. INFORMATIONAL SUBMITTALS (FIO):
1. General: prepare and submit Informational submittals require by other Specification Sections.
   a. Number of Copies: Submit three (3) copies of each submittal, unless otherwise indicated. Architect will not return copies.
   b. Certificates and Certifications: Provide a notarized statement that includes signature of entity responsible for preparing certification. Certificates and certifications shall be signed by an officer or other individual authorized to sign documents on behalf of that entity.
   c. Test and Inspection Reports: Test and inspection reports shall be signed by the individual responsible for conducting the test and/or inspection.
2. Qualification Data: Prepare written information that demonstrates capabilities and experience of firm or person. Include lists of completed projects with project names and addresses, names and addresses of Architects and Owners, and other information specified.
3. Product Certificates: Prepare written statements on manufacturer's letterhead certifying that product complies with requirements.
4. Welding Certificates: Prepare written certification that welding procedures and personnel comply with requirements. Submit record of Welding Procedure Specifications (WPS) and Procedure Qualification Record (PDQ) on AWS forms. Include names of firms and personnel certified.
5. Installer Certificates: Prepare written statements on manufacturer's letterhead certifying that Installer complies with requirements, and where required, is authorized for this specific Project.
6. Manufacturer Certificates: Prepare written statements on manufacturer's letterhead certifying that Manufacturer complies with requirements. Include evidence of manufacturing experience where required.
7. Material Certificates: Prepare written statements on manufacturer's letterhead certifying that material complies with requirements
8. Material Test Reports: Prepare reports written by qualified testing agency, on agency's standard form, indicating and interpreting test results of material for compliance with requirements.
9. Preconstruction Test Reports: Prepare reports written by qualified testing agency, on agency's standard form, indicating and interpreting test results of tests performed prior to, for compliance with performance requirements.
10. Compatibility Test Reports: Prepare reports written by qualified testing agency, on agency's standard form, indicating and interpreting test results of compatibility tests performed prior to installation of product. Include written recommendations for primers and substrate preparation needed for adhesion.

11. Field Test Reports: Prepare reports written by qualified testing agency, on agency's standard form, indicating and interpreting results of field tests performed either during installation of product or after product is installed in its final location, for compliance with requirements.
12. Product Test Reports: Prepare written reports indicating current product produced by manufacturer complies with requirements. Base reports on evaluation of test performed by manufacturer and witnessed by qualified testing agency, or on comprehensive tests performed by qualified testing agency,
13. Research/Evaluation Reports: Prepare written evidence, from a model code organization acceptable to authorities having jurisdiction, that product complies with building code in effect for Project. Include the following:
    a. Name of evaluation organization'
    b. Date of evaluation
    c. Time period when report is in effect
    d. Product and manufacturer's names
    e. Description of product
    f. Test procedures and results
    g. Limitations of use
14. Maintenance Data: Prepare written and graphic instructions and procedures for operation and normal maintenance of products and equipment. Comply with requirements in Closeout Submittals Section.
15. Design Data: Prepare written and graphic information, including but not limited to, performance and design criteria, list of applicable codes and regulations, and calculations. Include list of assumptions and other performance and design criteria and a summary of loads. Include load diagrams if applicable. Provide name and version of software, if any, used for calculations. Include page numbers.
16. Manufacturer's Instructions: Prepare written or published information that documents manufacturer's recommendations, guidelines, and procedures for installing or operating a product or equ9ipment. Include name of product and name, address, and telephone number of manufacturer. Include the following, as applicable:
    a. Preparation of substrates
    b. Required substrate tolerances
    c. Sequence of installation or erection
    d. Required installation tolerances
    e. Required adjustments
    f. Recommendation for cleaning and protection
17. Manufacturer's Field Reports: Prepare written information documenting factory-authorized service representative's tests and inspections. Include the following, as applicable:
    a. Name, address, and telephone number of factory-authorized service representative making report
    b. Statement on condition of substrates and their acceptability for installation of product
    c. Statement that products at Project site comply with requirements.

d. Summary of installation procedures being followed, whether they comply with requirements and, if not, what corrective action was taken
e. Results of operational and other tests and a statement of whether observed performance complies with requirements.
f. Statement whether conditions, products, and installation will affect warranty
g. Other required items indicated in individual Specification Sections.

18. Insurance Certificates and Bonds: Prepare written information indicating current status of insurance or bonding coverage. Include name of entity covered by insurance or bond, limits of coverage, amounts of deductibles, if any, and term of the coverage.

G. CONTRACTOR'S REVIEW:

1. Review for compliance with the Contract Documents, stamp with approval and submit to the Architect drawings, product data, samples and similar submittals required by the Contract Documents with reasonable promptness and in such sequence as to cause no delay in the Work or in the activities of the Owner or of separate contractors. Submittals not marked as reviewed for compliance with the Contract Documents or which are not required by the Contract Documents may be returned by the Architect without action.
2. By approving and submitting submittals, Contractor represents that he has determined and verified materials, field measurements, and field construction criteria related thereto, or will do so, and has checked and coordinated the information contained within such submittals with the requirements of the Work and of the Contract Documents.
3. The Contractor shall not be relieved of responsibility for deviations from requirements of the Contract Documents by the Architect's approval of shop drawings, product data, samples or similar submittals unless the Contractor has specifically informed the Architect in writing of such deviation at the time of submittal and the Architect has given written approval to the specific deviation.
4. The Contractor shall direct specific attention, in writing or on resubmitted shop drawings, product data, samples or similar submittals, to revisions other than those requested by the Architect on previous submittals.
5. When professional certification of performance criteria of materials, systems or equipment is required by the Contract Documents, the Architect shall be entitled to rely upon the accuracy and completeness of such calculations and certifications.
6. Where work is indicate "By Others" Contractor shall indicate responsibility for providing and coordinating such work, whether by Subcontractors or under separate contracts.

7. Contractor agrees that submittals processed by Architect are not Construction Change Directives or Change Orders; that purpose of submittals by Contractor is to demonstrate that Contractor understands design concept; that he demonstrates his understanding by indicating which equipment and material he intends to furnish and

install and by detailing fabrication and installation methods he intends to use.

8. Contractor represents by submitting samples, shop drawings and product data that he has complied with provision herein specified. Submissions made without Contractor's approval indicated thereon will be returned without being reviewed for compliance with this requirement.
9. Date each submittal and indicate name of Project, Architect, Contractor, Subcontractor, as applicable, description or name of equipment, material or product, and identify location at which it is to be used in the Work.
10. Accompany submittal with transmittal letter containing project name, Contractor's name, number of samples or drawings, titles and other pertinent data. Transmittal shall outline deviations, if any, in submittals from requirements of Contract Documents.
11. Perform no portion of the Work requiring submittal and review of submittals until the respective submittal has been approved and stamped by the Architect. Such work shall be in accord with submittals bearing the Architect's stamp.

H. ARCHITECT'S REVIEW AND APPROVAL:

1. Architect will review each submittal, mark it with appropriate action, and return it to Contractor with reasonable promptness, except where it must be held for coordination and the Contractor is so advised. Submittals will be marked by Architect as follows:
   a. "Approved" indicates the submittal has been reviewed for conformance with design and no exceptions are taken. Proceed with the work.
   b. "Approved as Noted" indicates Contractor may proceed with the work as noted. All submittals must be "Approved" or "Approved as Noted" before issued for field use.
   c. "Revise and Resubmit" or "Not Approved" indicates submittal to be revised and resubmitted for review prior to proceeding with the work or that submittal does not comply with Contract Documents.
2. Architect's review, approval or other appropriate action is only for checking for conformance with information given and the design concept expressed in the Contract Documents. Architect's approval of a specific item shall not indicate approval of an assembly in which the item is a component.
3. Architect's review of Contractor's submittals shall not be relieve Contractor of responsibility for deviation from requirements of the Contract Documents unless Contractor has informed the Architect in writing of such deviation at the time of submission and Architect to the specific deviation. Architect's review shall not relieve Contractor from responsibility for errors or omissions in submittals.
4. Submittals required to be submitted "For Architect's Information Only" (FOI) are required to demonstrate that the Work complies with performance requirements of the Contract Documents. Such submittals, if acceptable to Architect, will not be returned to Contractor.

5. Architect will return one reproducible copy of reviewed shop drawings for printing and distribution by Contractor.

I. RESUBMISSION:
1. Make corrections and changes indicated for unapproved submittals, and resubmit in same manner as specified above until Architect's approval is obtained.
2. On re-submittal transmittal, direct specific attention to revisions other than corrections requested by Architect on previous submittals, if any.

J. DISTRIBUTION:
1. Contractor is responsible for obtaining and distributing copies of submittals to his subcontractors and material suppliers after, as well as before, final approval. Prints of reviewed shop drawings shall be made from transparencies which carry the Architect's appropriate stamp.
2. For duration of project, Contractor shall maintain a file of approved submittals which shall be delivered to Owner as a part of project closeout documents.

K. PRODUCTS (NOT USED)

L. EXECUTION (NOT USED)

END OF SECTION 01330

SECTION 01520

TEMPORARY FACILITIES AND CONTROLS

1.1 GENERAL

A. Summary
   1. This Section includes requirements for temporary utilities, support facilities, and security and protection facilities.

B. Definitions
   1. Permanent Enclosure: As determined by the Owner, permanent or temporary roofing is complete, insulated, and weather tight; exterior walls are insulated and weather tight; and all openings are closed with permanent construction or substantial temporary closures.

C. Use Charges
   1. General: Cost or use charges for temporary facilities shall be included in the Contract Sum. Allow other entities to use temporary services and facilities without cost, including, but not limited to, Owner's construction forces, the Owner, occupants of Project, testing agencies, and authorities having jurisdiction.
   2. Water Service: Water from Owner's existing water system is available for use without metering and without payment of use charges. Provide connections and extensions of services as required for construction operations.
   3. Electric Power Service: Electric power from Owner's existing system is available for use without metering and without payment of use charges. Provide connections and extensions of services as required for construction operations.

D. Submittals
   1. Site Plan: Show temporary facilities, utility hookups, staging areas, and parking areas for construction personnel.

E. Quality Assurance
   1. Electric Service: Comply with NECA, NEMA, and UL standards and regulations for temporary electric service. Install service to comply with NFPA 70.
   2. Tests and Inspections: Arrange for authorities having jurisdiction to test and inspect each temporary utility before use. Obtain required certifications and permits.

F. Project Conditions
   1. Temporary Use of Permanent Facilities: Installer of each permanent service shall assume responsibility for operation, maintenance, and protection of each permanent service during its use as a construction facility before Owner's acceptance, regardless of previously assigned responsibilities.

1.2 PRODUCTS

A. Materials

1. Pavement: Comply with Division 02 Section(s) "Asphalt Paving".
2. Chain-Link Fencing: Minimum 2-inch thick, galvanized steel, chain-link fabric fencing; minimum 6 feet (1.8 m) high with galvanized steel pipe posts; minimum 2-3/8-inch- OD line posts and 2-7/8-inch- OD corner and pull posts, with 1-5/8-inch- OD top rails.
3. Portable Chain-Link Fencing: Minimum 2-inch (50-mm), 9-gage, galvanized steel, chain-link fabric fencing; minimum 6 feet (1.8 m) high with galvanized steel pipe posts; minimum 2-3/8-inch-(60-mm-) OD line posts and 2-7/8-inch- (73-mm-) OD corner and pull posts, with 1-5/8-inch- (42-

B. Temporary Facilities

1. Field Offices, General: Prefabricated or mobile units with serviceable finishes, temperature controls, and foundations adequate for normal loading.
2. Common-Use Field Office: Of sufficient size to accommodate needs of construction personnel. Keep office clean and orderly. Furnish and equip offices as follows:
   a. Furniture required for Project-site documents including file cabinets, plan tables, plan racks, and bookcases.
   b. Conference room of sufficient size to accommodate meetings of 10 individuals. Provide electrical power service and 120-V ac duplex receptacles, with not less than 1 receptacle on each wall. Furnish room with conference table, chairs, and 4-foot- (1.2-m-) square tack board.
   c. Drinking water and private toilet.
   d. Coffee machine and supplies.
   e. Heating and cooling equipment necessary to maintain a uniform indoor temperature of 68 to 72 deg F (20 to 22 deg C).
   f. Lighting fixtures capable of maintaining average illumination of 20 fc (215 lx) at desk height.
3. Storage and Fabrication Sheds: Provide sheds sized, furnished, and equipped to accommodate materials and equipment for construction operations.
   a. Store combustible materials apart from building.

C. Equipment

1. Fire Extinguishers: Portable, UL rated; with class and extinguishing agent as required by locations and classes of fire exposures.
2. HVAC Equipment: Unless Owner authorizes use of permanent HVAC system, provide vented, self-contained, liquid-propane-gas or fuel-oil heaters with individual space thermostatic control.
   a. Use of gasoline-burning space heaters, open-flame heaters, or salamander-type heating units is prohibited.

b. Heating Units: Listed and labeled for type of fuel being consumed, by a testing agency acceptable to authorities having jurisdiction, and marked for intended use.
c. Permanent HVAC System: If Owner authorizes use of permanent HVAC system for temporary use during construction, provide filter with MERV of 8 at each return air grille in system and remove at end of construction.

1.3 EXECUTION

A. Installation, General
1. Locate facilities where they will serve Project adequately and result in minimum interference with performance of the Work. Relocate and modify facilities as required by progress of the Work.
2. Provide each facility ready for use when needed to avoid delay. Do not remove until facilities are no longer needed or are replaced by authorized use of completed permanent facilities.

B. Temporary Utility Installation
1. General: Install temporary service or connect to existing service.
   a. Arrange with utility company, Owner, and existing users for time when service can be interrupted, if necessary, to make connections for temporary services.
2. Sewers and Drainage: Provide temporary utilities to remove effluent lawfully.
   a. Connect temporary sewers to municipal system as directed by authorities having jurisdiction.
3. Water Service: Use of Owner's existing water service facilities will be permitted, as long as facilities are cleaned and maintained in a condition acceptable to Owner. At Substantial Completion, restore these facilities to condition existing before initial use.
   a. Where installations below an outlet might be damaged by spillage or leakage, provide a drip pan of suitable size to minimize water damage. Drain accumulated water promptly from pans.
4. Sanitary Facilities: Provide temporary toilets, wash facilities, and drinking water for use of construction personnel. Comply with authorities having jurisdiction for type, number, location, operation, and maintenance of fixtures and facilities.
   a. Toilets: Use of Owner's existing toilet facilities will be permitted, as long as facilities are cleaned and maintained in a condition acceptable to Owner. At Substantial Completion, restore these facilities to condition existing before initial use.
5. Heating and Cooling, Provide temporary heating and cooling, required by construction activities for curing or drying of completed installations or for protecting installed construction from adverse effects of low temperatures or high humidity. Select equipment that will not have a harmful effect on completed installations or elements being installed.
6. Ventilation and Humidity Control: Provide temporary ventilation required by construction activities for curing or drying of completed installations or for protecting installed construction from adverse effects of high humidity. Select equipment that will not have a harmful effect on

completed installations or elements being installed. Coordinate ventilation requirements to produce ambient condition required and minimize energy consumption.

7. Electric Power Service: Use of Owner's existing electric power service will be permitted, as long as equipment is maintained in a condition acceptable to Owner.
   a. Install electric power service overhead unless otherwise indicated.
   b. Connect temporary service to Owner's existing power source, as directed by Owner.
8. Lighting: Provide temporary lighting with local switching that provides adequate illumination for construction operations, observations, inspections, and traffic conditions.
   a. Install and operate temporary lighting that fulfills security and protection requirements without operating entire system.
   b. Install lighting for Project identification sign
9. Telephone Service: Provide temporary telephone service in common-use facilities for use by all construction personnel. Install one telephone line for each field office.
   a. Provide additional telephone lines for the following:
      1) Provide a dedicated telephone line for each facsimile machine and computer in each field office.
   b. At each telephone, post a list of important telephone numbers.
      1) Police and fire departments.
      2) Ambulance service.
      3) Contractor's home office.
      4) the Owner's office.
      5) Owner's office.
      6) Principal subcontractors' field and home offices.
   c. Provide superintendent with cellular telephone or portable two-way radio for use when away from field office
10. Electronic Communication Service: Provide temporary electronic communication service, including electronic mail, in common-use facilities.

C. Support Facilities Installation
   1. General: Comply with the following:
      a. Provide incombustible construction for offices, shops, and sheds located within construction area or within 30 feet (9 m) of building lines. Comply with NFPA 241.
      b. Maintain support facilities until near Substantial Completion. Remove before Substantial Completion. Personnel remaining after Substantial Completion will be permitted to use permanent facilities, under conditions acceptable to Owner.
   2. Temporary Roads and Paved Areas: Construct and maintain temporary roads and paved areas adequate for construction operations. Locate temporary roads and paved areas within construction limits indicated on Drawings.
      a. Provide dust-control treatment that is nonpolluting and nontracking. Reapply treatment as required to minimize dust.

4. Traffic Controls: Comply with requirements of authorities having jurisdiction.
   a. Protect existing site improvements to remain including curbs, pavement, and utilities.
   b. Maintain access for fire-fighting equipment and access to fire hydrants.
5. Parking: Use designated areas of Owner's existing, parking areas for construction personnel.
6. Dewatering Facilities and Drains: Comply with requirements of authorities having jurisdiction. Maintain Project site, excavations, and construction free of water.
   a. Dispose of rainwater in a lawful manner that will not result in flooding Project or adjoining properties nor endanger permanent Work or temporary facilities.
   b. Remove snow and ice as required to minimize accumulations.
7. Project Identification and Temporary Signs: Install signs where indicated to inform public and individuals seeking entrance to Project. Unauthorized signs are not permitted.
   a. Provide temporary, directional signs for construction personnel and visitors.
   b. Maintain and touchup signs so they are legible at all times.
8. Waste Disposal Facilities: Provide waste-collection containers in sizes adequate to handle waste from construction operations. Comply with requirements of authorities having jurisdiction. Comply with General Requirements for progress cleaning requirements.
9. Lifts and Hoists: Provide facilities necessary for hoisting materials and personnel.
   a. Truck cranes and similar devices used for hoisting materials are considered "tools and equipment" and not temporary facilities.
10. Temporary Elevator Use: Refer to Division 14 for temporary use of new elevators.
11. Existing Elevator Use: Use of Owner's existing elevators will be permitted, as long as elevators are cleaned and maintained in a condition acceptable to Owner. At Substantial Completion, restore elevators to condition existing before initial use, including replacing worn cables, guide shoes, and similar items of limited life.
   a. Do not load elevators beyond their rated weight capacity.
   b. Provide protective coverings, barriers, devices, signs, or other procedures to protect elevator car and entrance doors and frame. If, despite such protection, elevators become damaged, engage elevator Installer to restore damaged work so no evidence remains of correction work. Return items that cannot be refinished in field to the shop, make required repairs and refinish entire unit, or provide new units as required.
12. Existing Stair Usage: Use of Owner's existing stairs will be permitted, as long as stairs are cleaned and maintained in a condition acceptable to Owner. At Substantial Completion, restore stairs to condition existing before initial use.
   a. Provide protective coverings, barriers, devices, signs, or other procedures to protect stairs and to maintain means of egress. If,

despite such protection, stairs become damaged, restore damaged areas so no evidence remains of correction work.

13. Temporary Use of Permanent Stairs: Cover finished, permanent stairs with protective covering of plywood or similar material so finishes will be undamaged at time of acceptance.

D. Security and Protection Facilities Installation

1. Environmental Protection: Provide protection, operate temporary facilities, and conduct construction in ways and by methods that comply with environmental regulations and that minimize possible air, waterway, and subsoil contamination or pollution or other undesirable effects.
2. Temporary Erosion and Sedimentation Control: Provide measures to prevent soil erosion and discharge of soil-bearing water runoff and airborne dust to adjacent properties and walkways, according to requirements of authorities having jurisdiction.
   a. Inspect, repair, and maintain erosion- and sedimentation-control measures during construction until permanent vegetation has been established.
3. Stormwater Control: Comply with authorities having jurisdiction. Provide barriers in and around excavations and subgrade construction to prevent flooding by runoff of stormwater from heavy rains.
4. Tree and Plant Protection: Install temporary fencing located as indicated or outside the drip line of trees to protect vegetation from damage from construction operations. Protect tree root systems from damage, flooding, and erosion.
5. Pest Control: Engage pest-control service to recommend practices to minimize attraction and harboring of rodents, roaches, and other pests and to perform extermination and control procedures at regular intervals so Project will be free of pests and their residues at Substantial Completion. Obtain extended warranty for Owner. Perform control operations lawfully, using environmentally safe materials.
6. Site Enclosure Fence: Before construction operations begin furnish and install site enclosure fence in a manner that will prevent people and animals from easily entering site except by entrance gates.
   a. Extent of Fence: As required to enclose portion of site determined sufficient to accommodate construction operations.
   b. Maintain security by limiting number of keys and restricting distribution to authorized personnel. Provide Owner with one set of keys.
7. Security Enclosure and Lockup: Install substantial temporary enclosure around partially completed areas of construction. Provide lockable entrances to prevent unauthorized entrance, vandalism, theft, and similar violations of security.
8. Barricades, Warning Signs, and Lights: Comply with requirements of authorities having jurisdiction for erecting structurally adequate barricades, including warning signs and lighting.

9. Temporary Enclosures: Provide temporary enclosures for protection of construction, in progress and completed, from exposure, foul weather,

other construction operations, and similar activities. Provide temporary weather tight enclosure for building exterior.

a. Where heating or cooling is needed and permanent enclosure is not complete, insulate temporary enclosures.

10. Temporary Partitions: Provide floor-to-ceiling dustproof partitions to limit dust and dirt migration and to separate areas occupied by Owner and tenants from fumes and noise.
    a. Construct dustproof partitions with gypsum wallboard with joints taped on occupied side, and fire-retardant plywood on construction operations side.
    b. If containment of airborne particles and dust generated by construction activities is critical to occupants of other spaces in building, e.g., occupied healthcare facilities: Construct dustproof partitions with 2 layers of 3-mil (0.07-mm) polyethylene sheet on each side. Cover floor with 2 layers of 3-mil (0.07-mm) polyethylene sheet, extending sheets 18 inches (460 mm) up the sidewalls. Overlap and tape full length of joints. Cover floor with fire-retardant plywood.
        1) Construct vestibule and airlock at each entrance through temporary partition with not less than 48 inches (1219 mm) between doors. Maintain water-dampened foot mats in vestibule.
    c. Insulate partitions to provide noise protection to occupied areas.
    d. Seal joints and perimeter. Equip partitions with dustproof doors and security locks.
    e. Protect air-handling equipment.
    f. Weather strip openings.
    g. Provide walk-off mats at each entrance through temporary partition.

12. Temporary Fire Protection: Install and maintain temporary fire-protection facilities of types needed to protect against reasonably predictable and controllable fire losses. Comply with NFPA 241.
    a. Prohibit smoking in construction, areas.
    b. Supervise welding operations, combustion-type temporary heating units, and similar sources of fire ignition according to requirements of authorities having jurisdiction.
    c. Develop and supervise an overall fire-prevention and -protection program for personnel at Project site. Review needs with local fire department and establish procedures to be followed. Instruct personnel in methods and procedures. Post warnings and information.
    d. Provide temporary standpipes and hoses for fire protection. Hang hoses with a warning sign stating that hoses are for fire-protection purposes only and are not to be removed. Match hose size with outlet size and equip with suitable nozzles.

E. Operation, Termination, And Removal

1. Supervision: Enforce strict discipline in use of temporary facilities. To minimize waste and abuse, limit availability of temporary facilities to essential and intended uses.
2. Maintenance: Maintain facilities in good operating condition until removal.
   a. Maintain operation of temporary enclosures, heating, cooling, humidity control, ventilation, and similar facilities on a 24-hour basis where required to achieve indicated results and to avoid possibility of damage.
3. Operate Project-identification-sign lighting daily from dusk until 12:00 midnight.
4. Temporary Facility Changeover: Do not change over from using temporary security and protection facilities to permanent facilities until Substantial Completion.
5. Termination and Removal: Remove each temporary facility when need for its service has ended, when it has been replaced by authorized use of a permanent facility, or no later than Substantial Completion. Complete or, if necessary, restore permanent construction that may have been delayed because of interference with temporary facility. Repair damaged Work, clean exposed surfaces, and replace construction that cannot be satisfactorily repaired.
   a. Materials and facilities that constitute temporary facilities are property of Contractor. Owner reserves right to take possession of Project identification signs.
   b. Remove temporary paving not intended for or acceptable for integration into permanent paving. Where area is intended for landscape development, remove soil and aggregate fill that do not comply with requirements for fill or subsoil. Remove materials contaminated with road oil, asphalt and other petrochemical compounds, and other substances that might impair growth of plant materials or lawns. Repair or replace street paving, curbs, and sidewalks at temporary entrances, as required by authorities having jurisdiction.
   c. At Substantial Completion, clean and renovate permanent facilities used during construction period. Comply with final cleaning requirements specified in General Requirements

END OF SECTION 01520

SECTION 01710

SELECTIVE DEMOLITION

1.1 GENERAL

A. Description of Work

1. This specification covers the furnishing and installation of materials for selective demolition. Products shall be as follows or as directed by the Owner. Installation procedures shall be in accordance with the product manufacturer's recommendations. Demolition and removal of materials shall be as required to support the work.

B. Summary

1. This Section includes the following:
   a. Demolition and removal of selected portions of building or structure.
   b. Demolition and removal of selected site elements.
   c. Salvage of existing items to be reused or recycled.
   d. Asbestos abatement and encapsulation.
   e. Lead paint abatement and encapsulation.

C. Definitions

1. Remove: Detach items from existing construction and legally dispose of them off-site, unless indicated to be removed and salvaged or removed and reinstalled.
2. Remove and Salvage: Detach items from existing construction and deliver them to Owner ready for reuse, as directed.
3. Remove and Reinstall: Detach items from existing construction, prepare them for reuse, and reinstall them where indicated.
4. Existing to Remain: Existing items of construction that are not to be removed and that are not otherwise indicated to be removed, removed and salvaged, or removed and reinstalled.

D. Materials Ownership

1. Historic items, relics, and similar objects including, but not limited to, cornerstones and their contents, commemorative plaques and tablets, antiques, and other items of interest or value to Owner that may be encountered during selective demolition remain Owner's property. Carefully remove and salvage each item or object in a manner to prevent damage and deliver promptly to Owner.
   a. Coordinate with the Owner who will establish special procedures for removal and salvage.

E. Submittals

1. Qualification Data: For demolition firm, professional engineer, refrigerant recovery technician, as directed.

2. Schedule of Selective Demolition Activities: Indicate the following:

a. Detailed sequence of selective demolition and removal work, with starting and ending dates for each activity.
b. Interruption of utility services. Indicate how long utility services will be interrupted.
c. Coordination for shutoff, capping, and continuation of utility services.
d. Use of elevator and stairs.
e. Locations of proposed dust and noise-control temporary partitions.
f. Means of protection for items to remain and items in path of waste removal from building.

3. Inventory: After selective demolition is complete, submit a list of items that have been removed and salvaged.
4. Pre-demolition Photographs or Videotapes: Show existing conditions of adjoining construction and site improvements, including finish surfaces, that might be misconstrued as damage caused by selective demolition operations. Submit before Work begins.
5. Landfill Records: Indicate receipt and acceptance of hazardous wastes by a landfill facility licensed to accept hazardous wastes.
   a. Comply with submittal requirements in Division 01 Section "Construction Waste Management".

F. Quality Assurance
1. Demolition Firm Qualifications: An experienced firm that has specialized in demolition work similar in material and extent to that indicated for this Project.
2. Refrigerant Recovery Technician Qualifications: Certified by an EPA-approved certification program.
3. Regulatory Requirements: Comply with governing EPA notification regulations before beginning selective demolition. Comply with hauling and disposal regulations of authorities having jurisdiction.
5. Standards: Comply with ANSI A10.6 and NFPA 241.
6. Pre-demolition Conference: Conduct conference at Project site. Review methods and procedures related to selective demolition including, but not limited to, the following:
   a. Inspect and discuss condition of construction to be selectively demolished.
   b. Review structural load limitations of existing structure.
   c. Review and finalize selective demolition schedule and verify availability of materials, demolition personnel, equipment, and facilities needed to make progress and avoid delays.
   d. Review requirements of work performed by other trades that rely on substrates exposed by selective demolition operations.
   e. Review areas where existing construction is to remain and requires protection.

G. Project Conditions
1. Owner will vacate the building before demolition begins.

2. Conditions existing at time of inspection for bidding purpose will be maintained by Owner as far as practical.

a. Before selective demolition, Owner will indicate items to be salvaged.

3. Notify the Owner of discrepancies between existing conditions and Drawings before proceeding with selective demolition.
4. Hazardous Materials are present in construction and are to be selectively demolished.
5. A report on the presence of hazardous materials by Corporate Environmental Risk Management dated February 20, 2009, C.E.R.M. Project No. 11-0964-035 is part of this contract and is on file for review and use. Examine report to become aware of locations where hazardous materials are present.
6. Storage or sale of removed items or materials on-site is not permitted.
7. Utility Service: Maintain existing utilities indicated to remain in service and protect them against damage during selective demolition operations.

H. Warranty
1. Existing Warranties: Remove, replace, patch, and repair materials and surfaces cut or damaged during selective demolition, by methods and with materials so as not to void existing warranties.

2.1 PRODUCTS (Not Used)

3.1 EXECUTION

A. Utility Services and Mechanical/Electrical Systems
1. Existing Services/Systems: Maintain services/systems indicated to remain and protect them against damage during selective demolition operations.
2. Service/System Requirements: Locate, identify, disconnect, and seal or cap off indicated utility services and mechanical/electrical systems serving areas to be selectively demolished.
a. the Owner will arrange to shut off indicated services/systems when requested by Contractor.
b. Arrange to shut off indicated utilities with utility companies.
c. If services/systems are required to be removed, relocated, or abandoned, before proceeding with selective demolition provide temporary services/systems that bypass area of selective demolition and that maintain continuity of services/systems to other parts of building.
d. Cut off pipe or conduit in walls or partitions to be removed. Cap, valve, or plug and seal remaining portion of pipe or conduit after bypassing.
1) Where entire wall is to be removed, existing services/systems may be removed with removal of the wall.

B. Preparation

1. Site Access and Temporary Controls: Conduct selective demolition and debris-removal operations to ensure minimum interference with roads, streets, walks, walkways, and other adjacent occupied and used facilities.
2. Temporary Facilities: Provide temporary barricades and other protection required to prevent injury to people and damage to adjacent buildings and facilities to remain.
    a. Provide protection to ensure safe passage of people around selective demolition area and to and from occupied portions of building.
    b. Provide temporary weather protection, during interval between selective demolition of existing construction on exterior surfaces and new construction, to prevent water leakage and damage to structure and interior areas.
    c. Protect walls, ceilings, floors, and other existing finish work that are to remain or that are exposed during selective demolition operations.
    d. Cover and protect furniture, furnishings, and equipment that have not been removed.
    e. Comply with requirements for temporary enclosures, dust control, heating, and cooling.
3. Temporary Shoring: Provide and maintain shoring, bracing, and structural supports as required to preserve stability and prevent movement, settlement, or collapse of construction and finishes to remain, and to prevent unexpected or uncontrolled movement or collapse of construction being demolished.
    a. Strengthen or add new supports when required during progress of selective demolition.

C. Selective Demolition, General
1. General: Demolish and remove existing construction only to the extent required by new construction and as indicated. Use methods required to complete the Work within limitations of governing regulations and as follows:
    a. Proceed with selective demolition systematically, from higher to lower level. Complete selective demolition operations above each floor or tier before disturbing supporting members on the next lower level.
    b. Neatly cut openings and holes plumb, square, and true to dimensions required. Use cutting methods least likely to damage construction to remain or adjoining construction. Use hand tools or small power tools designed for sawing or grinding, not hammering and chopping, to minimize disturbance of adjacent surfaces. Temporarily cover openings to remain.
    c. Cut or drill from the exposed or finished side into concealed surfaces to avoid marring existing finished surfaces.
    d. Do not use cutting torches until work area is cleared of flammable materials. At concealed spaces, such as duct and pipe interiors, verify condition and contents of hidden space before starting flame-cutting operations. Maintain fire watch and

portable fire-suppression devices during flame-cutting operations.

e. Maintain adequate ventilation when using cutting torches.
f. Remove decayed, vermin-infested, or otherwise dangerous or unsuitable materials and promptly dispose of off-site.
g. Remove structural framing members and lower to ground by method suitable to avoid free fall and to prevent ground impact or dust generation.
h. Locate selective demolition equipment and remove debris and materials so as not to impose excessive loads on supporting walls, floors, or framing.
i. Dispose of demolished items and materials promptly. Comply with requirements in Division 01 Section "Construction Waste Management".

2. Reuse of Building Elements: Project has been designed to result in end-of-Project rates for reuse of building elements as follows. Do not demolish building elements beyond what is indicated on Drawings without the Owner's approval.
3. Removed and Salvaged Items:
   a. Clean salvaged items.
   b. Pack or crate items after cleaning. Identify contents of containers.
   c. Store items in a secure area until delivery to Owner.
   d. Transport items to Owner's storage area designated by Owner as directed.
   e. Protect items from damage during transport and storage.
4. Removed and Reinstalled Items:
   a. Clean and repair items to functional condition adequate for intended reuse. Paint equipment to match new equipment.
   b. Pack or crate items after cleaning and repairing. Identify contents of containers.
   c. Protect items from damage during transport and storage.
   d. Reinstall items in locations indicated. Comply with installation requirements for new materials and equipment. Provide connections, supports, and miscellaneous materials necessary to make item functional for use indicated.
5. Existing Items to Remain: Protect construction indicated to remain against damage and soiling during selective demolition. When permitted by the Owner, items may be removed to a suitable, protected storage location during selective demolition and cleaned and reinstalled in their original locations after selective demolition operations are complete.

D. Selective Demolition Procedures for Specific Materials
1. Concrete: Demolish in sections. Cut concrete full depth at junctures with construction to remain and at regular intervals, using power-driven saw, then remove concrete between saw cuts.

2. Masonry: Demolish in small sections. Cut masonry at junctures with construction to remain, using power-driven saw, then remove masonry between saw cuts.

3. Resilient Floor Coverings: Remove floor coverings and adhesive according to recommendations in RFCI-WP and its Addendum.
   a. Remove residual adhesive and prepare substrate for new floor coverings by one of the methods recommended by RFCI.
4. Air-Conditioning Equipment: Remove equipment without releasing refrigerants.

E. Disposal of Demolished Materials

1. General: Except for items or materials indicated to be recycled, reused, salvaged, reinstalled, or otherwise indicated to remain Owner's property, remove demolished materials from Project site and legally dispose of them in an EPA-approved landfill.
   a. Do not allow demolished materials to accumulate on-site.
   b. Remove and transport debris in a manner that will prevent spillage on adjacent surfaces and areas.
   c. Remove debris from elevated portions of building by chute, hoist, or other device that will convey debris to grade level in a controlled descent.
   d. Comply with requirements specified in Division 01 Section "Construction Waste Management".
2. Burning: Do not burn demolished materials.

3. Disposal: Transport demolished materials off Owner's property and legally dispose of them.

END OF SECTION 01710

FULTON COUNTY DESIGN STANDARDS FOR DEPARTMENT OF HUMAN SERVICES FACILITIES

SECTION 01720

PART I -- GENERAL

1.1 GENERAL

A. In order to maintain the continuity within various Centers that the Department of Human Services desires in their facilities, the following general design considerations shall be incorporated.

1. Each facility shall have a vestibule having bi-parting doors actuated by motion detectors. Doors shall be at each end of the vestibule creating an air lock. A recessed floor mat shall be installed at the exterior set of doors. This mat shall be as wide as the double doors and 48" deep.
2. A Message Board shall be located adjacent to the vestibule to announce events, hours and other rotating events. Boards shall be 4' wide x 3' high, be aluminum trim, have grooved felt background (for tabbed plastic letters) and have glass doors.
3. Bulletin Board Cabinets shall be 4' wide x 3' high, have aluminum trim, have 1/4" corkboard covered in fabric, and have continuous hinged doors with flat key tumbler locks.
4. Handrails shall be vinyl covered and corner guards shall be vinyl covered to match handrails.
5. Exterior Work:
   a. Because of the nature of the users, additional accessible parking stalls beyond the ADAAG requirements are desired. This increase of numbers shall be twice the ADAAG requirements. Ref. GA Accessibility Code, 120-23-20.07 (e)1.
   b. For all driveways that will accommodate buses, the base course of pavement shall be increased for heavy duty use (8" deep), tack coat, 2"asphalt type "B", tack coat, second layer of 2" asphalt type "B", tack coat, and a top layer of 1" asphalt type "F".
   c. Provide covered walkways from accessible parking to the entrance of the building.

END OF SECTION 01720

SECTION 01720a

GENERAL REQUIREMENTS

1.1 GENERAL

A. In order to maintain the continuity within various Centers that the Department of Human Services desires in their facilities, the following general design considerations shall be incorporated into the construction.

B. The type of facility, Neighborhood Center or Multipurpose Center, will determine which items shall be included in the building.

C. Section – Specialties
   1. Corner Guards:
      a. Kitchen: each exposed corner within a kitchen shall be protected with a stainless steel corner guard per Section – Wall and Corner Guards.
      b. Public areas: each wall which may be subject to high traffic shall be protected at the corners with vinyl covered corner guards.
   2. Crash Rails:
      a. Kitchens: each wall subject to loading traffic abuse shall have a stainless steel crash rail install along its length.
   3. Door Kickplates:
      a. Each door subject to loading traffic abuse shall have stainless steel kickplates on each side. Plates shall be 16 gauge, 430 steel and 40" high by width of door. Attachment shall be by stainless steel screws with heads flush with surface.

D. Section – Plumbing
   1. Shower stalls:
      a. Shall be constructed with ceramic tile walls and floors. Wall tile shall extend the full height of the wall. Wall to floor transitions shall be by concave base tile piece.
      b. At accessible shower stall, required bench shall be constructed solid and covered in ceramic tile. Curb shall be no higher than ½".
   2. Toilet stalls:
      a. Each toilet stall shall have one 18" long stainless steel shelf located above the side grab bar.
      b. Each non-accessible toilet stall shall be 3'-4" wide.
      c. Each toilet stall shall have a robe hook. Women's toilets shall have sanitary napkin disposal.
      d. One toilet shall be 20" AFF to bowl rim top. This toilet shall not be the accessible toilet.
      e. Toilets shall have electronic infrared sensor automatic flush valve. All wiring shall e wall cavities.
      f. Women's Toilet Room shall have one sanitary napkin/tampon dispenser.
   3. Locker Rooms:
      a. Benches shall be distributed throughout the locker room with adjacent stainless steel handrails.
   4. Lavatories:
      a. Each lavatory shall have an electronic infrared sensor automatic faucet control. All wiring shall be inside wall cavities.

b. Each lavatory shall have a protective under-sink supply cover.

5. Floor Drains:
   a. The entire floor shall slope to the floor drain(s).

END OF SECTION 01720a

SECTION 02111

BUILDING DEMOLITION

PART 1 GENERAL

1.1 Description of Work
1. This specification covers the furnishing and installation of materials for building demolition. Products shall be as follows or as directed by the Owner. Installation procedures shall be in accordance with the product manufacturer's recommendations. Demolition and removal of materials shall be as required to support the work.

1.2 Hazardous Materials: Hazardous material remediation is not part of this contract.

1.3 Summary
A. This Section includes the following:
1. Demolition and removal of interior partitions, ceiling tiles, flooring material, doors, door frames, certain millwork and related items as indicated on the drawings.
2. Disconnecting, capping or sealing, and abandoning in-place or removing, site utilities.
3. Salvaging items for reuse by Owner.

1.4 Definitions
A. Demolish: Completely remove and legally dispose of off-site.
B. Recycle: Recovery of demolition waste for subsequent processing in preparation for reuse.
C. Salvage: Carefully detach from existing construction, in a manner to prevent damage, and deliver to Owner ready for reuse. Include fasteners or brackets needed for reattachment elsewhere.

1.5 Materials Ownership
A. Unless otherwise indicated, demolition waste becomes property of Contractor.
B. Historic items, relics, antiques, and similar objects including, but not limited to, cornerstones and their contents, commemorative plaques and tablets, and other items of interest or value to Owner that may be uncovered during demolition remain the property of Owner.
1. Carefully salvage in a manner to prevent damage and promptly return to Owner.

1.6 Submittals

A. The following information shall be provided.
1. A copy of this specification section, with addendum updates included, and all referenced and applicable sections, with addendum updates included, with each paragraph check-marked to indicate specification compliance or marked to indicate requested deviations from specification requirements. Check marks (✓) shall denote full

compliance with a paragraph as a whole. If deviations from the specifications are indicated, and therefore requested by the Contractor, each deviation shall be underlined and denoted by a number in the margin to the right of the identified paragraph, referenced to a detailed written explanation of the reasons for requesting the deviation. The Construction Manager shall be the final authority for determining acceptability of requested deviations. The remaining portions of the paragraph not underlined shall signify compliance on the part of the Contractor with the specifications. Failure to include a copy of the marked-up specification sections, along with justification(s) for any requested deviations to the specification requirements, with the submittal shall be sufficient cause for rejection of the entire submittal with no further consideration.

B. Schedule of Building Demolition Activities: Indicate the following:
   1. Detailed sequence of demolition work, with starting and ending dates for each activity.
   2. Temporary interruption of utility services.
   3. Shutoff and capping or re-routing of utility services.
C. Inventory: Submit a list of items to be removed and salvaged and deliver to Owner prior to start of demolition.
E. Landfill Records: Indicate receipt and acceptance of hazardous wastes by a landfill facility licensed to accept hazardous wastes.

1.7 Quality Assurance
A. Regulatory Requirements: Comply with governing EPA notification regulations before beginning demolition. Comply with hauling and disposal regulations of authorities having jurisdiction.
B. Standards: Comply with ANSI A10.6 and NFPA 241.
C. Pre-demolition Conference: Conduct conference at Project site to review methods and procedures related to building demolition including, but not limited to, the following:
   1. Inspect and discuss condition of construction to be demolished.
   2. Review structural load limitations of existing structures.
   3. Review and finalize building demolition schedule and verify availability of demolition personnel, equipment, and facilities needed to make progress and avoid delays.
   4. Review and finalize protection requirements.
   5. Review procedures for noise control and dust control.
   6. Review items to be salvaged and returned to Owner.

1.8 Project Conditions
A. Building will be vacated before start of the Work.
B. Work will be conducted after closing and on weekends and holidays so the normal function of the building will not be disrupted during the work day.
C. Buildings immediately adjacent to demolition area will be occupied. Conduct building demolition so operations of occupied buildings will not be disrupted.
   1. Provide not less than 72 hours' notice of activities that will affect operations of adjacent occupied buildings.

2. Maintain access to existing walkways, exits, and other facilities used by occupants of adjacent buildings.
   a) Do not close or obstruct walkways, exits, or other facilities used by occupants of adjacent buildings without written permission from authorities having jurisdiction.

D. Owner assumes no responsibility for buildings and structures to be demolished.
   1. Conditions existing at time of inspection for bidding purpose will be maintained by Owner as far as practical.
   2. Before demolition, Owner will remove certain items, as directed by the Owner.

E. Hazardous Materials: Hazardous materials have not been used in the portion of the building to be demolished.
   1. Contractor will provide material safety data sheets for materials that are known to be present in buildings and structures to be demolished because of building operations or processes performed there.

F. On-site storage or sale of removed items or materials is not permitted.

1.9 Coordination

A. Arrange demolition schedule so as not to interfere with Owner's on-site operations or operations of adjacent occupied buildings, as directed.

PART 2 PRODUCTS

A. No Products Used

PART 3 EXECUTION

3.1 Examination

A. Verify that utilities have been disconnected and capped before starting demolition operations.
B. Review Project Record Documents of existing construction provided by Owner. Owner does not guarantee that existing conditions are same as those indicated in Project Record Documents.
C. Inventory and record the condition of items to be removed and salvaged. Provide photographs as directed, of conditions that might be misconstrued as damage caused by salvage operations.
D. Perform or engage a professional engineer to perform, as directed, an engineering survey of condition of building to determine whether removing any element might result in structural deficiency or unplanned collapse of any portion of structure or adjacent structures during building demolition operations.
E. Verify that hazardous materials are not present before proceeding with building demolition operations.

3.2 Preparation

A. Existing Utilities: Locate, identify, disconnect, and seal or cap off indicated utilities serving buildings and structures to be demolished.
   1. Arrange to shut off indicated utilities with utility companies, as directed.
   2. If removal, relocation, or abandonment of utility services will affect adjacent occupied buildings, then provide temporary utilities that bypass buildings and structures to be demolished and that maintain continuity of service to other buildings and structures.
   3. Cut off pipe or conduit a minimum of 24 inches (610 mm) below grade. Cap, valve, or plug and seal remaining portion of pipe or conduit after bypassing according to requirements of authorities having jurisdiction.

B. Salvaged Items: Comply with the following:
   1. Clean salvaged items of dirt and demolition debris.
   2. Pack or crate items after cleaning. Identify contents of containers.
   3. Store items in a secure area until delivery to Owner.
   4. Transport items to storage area designated by Owner.
   5. Protect items from damage during transport and storage.

3.3 Protection

A. Existing Facilities: Protect adjacent walkways, loading docks, building entries, and other building facilities during demolition operations. Maintain exits from existing buildings.

B. Existing Utilities: Maintain utility services to remain and protect from damage during demolition operations.
   1. Do not interrupt existing utilities serving adjacent occupied or operating facilities unless authorized in writing by Owner and authorities having jurisdiction.
   2. Provide temporary services during interruptions to existing utilities, as acceptable to Owner and authorities having jurisdiction.
      a) Provide at least 72 hours' notice to occupants of affected buildings if shutdown of service is required during changeover.

C. Temporary Protection: Erect temporary protection, such as walks, fences, railings, canopies, and covered passageways, where required by authorities having jurisdiction, and as indicated. Comply with requirements in Division 01 Section "Temporary Facilities and Controls".
   1. Protect adjacent buildings and facilities from damage due to demolition activities.
   2. Protect existing site improvements, appurtenances, and landscaping to remain.
   3. Provide temporary barricades and other protection required to prevent injury to people and damage to adjacent buildings and facilities to remain.
   4. Provide protection to ensure safe passage of people around building demolition area and to and from occupied portions of adjacent buildings and structures.
   5. Protect walls, windows, roofs, and other adjacent exterior construction that are to remain and that are exposed to building demolition operations.

6. Erect and maintain dustproof enclosures for art work on the walls during demolition activities.

D. Remove temporary barriers and protections where hazards no longer exist. Where open excavations or other hazardous conditions remain, leave temporary barriers and protections in place.

3.4 Demolition, General

A. Cutting torches:
   1. Do not use cutting torches until work area is cleared of flammable materials. Maintain portable fire-suppression devices during flame-cutting operations.
   2. Maintain fire watch during and for at least two hours after flame cutting operations.
   3. Maintain adequate ventilation when using cutting torches.
   4. Locate building demolition equipment and remove debris and materials so as not to impose excessive loads on supporting walls, floors, or framing.

B. Engineering Surveys: During demolition, perform surveys to detect hazards that may result from building demolition activities.

C. Site Access and Temporary Controls: Conduct building demolition and debris-removal operations to ensure minimum interference with roads, streets, walks, walkways, and other adjacent occupied and used facilities.
   1. Do not close or obstruct streets, walks, walkways, or other adjacent occupied or used facilities without permission from Owner and authorities having jurisdiction. Provide alternate routes around closed or obstructed traffic ways if required by authorities having jurisdiction.
   2. Use water mist and other suitable methods to limit spread of dust and dirt. Comply with governing environmental-protection regulations. Do not use water when it may damage adjacent construction or create hazardous or objectionable conditions, such as ice, flooding, and pollution.

1.5 Demolition by Mechanical Means

A. Remove debris from elevated portions of the building by chute, hoist, or other device that will convey debris to grade level in a controlled descent.
   1. Remove structural framing members and lower to ground by method suitable to minimize ground impact and dust generation.

1.6 Demolition by Explosives: Use of explosives is not permitted

1.7 Site Restoration

A. Below-Grade Areas: Completely fill below-grade areas and voids resulting from building demolition operations with satisfactory soil materials.

1.8 Disposal of Demolished Materials

A. Remove demolition waste materials from Project site and legally dispose of them in an EPA approved landfill acceptable to authorities having jurisdiction.
   1. Do not allow demolished materials to accumulate on-site.
   2. Remove and transport debris in a manner that will prevent spillage on adjacent surfaces and areas.

B. Do not burn demolished materials.

1.9 Cleaning

A. Clean adjacent structures and improvements of dust, dirt, and debris caused by building demolition operations. Return adjacent areas to condition existing before building demolition operations began.

END OF SECTION 02111

SECTION 02630

PORTLAND CEMENT CONCRETE SIDEWALKS

PART 1 GENERAL

1.1 Description of Work: This standard covers the furnishing and installation of cast-in-place Portland cement (PCC) sidewalks. Installation procedures shall be in accordance with the product manufacturer's recommendations. Demolition and removal of materials shall be required to support the work. Sidewalks shall meet Georgia Accessibility Code and/or ADAAG and all applicable codes.

1.2 SUBMITTALS

A. The following information shall be provided.

1. A copy of this specification section, with addendum updates included, and all referenced and applicable sections, with addendum updates included, with each paragraph check-marked to indicate specification compliance or marked to indicate requested deviations from specification requirements. Check marks (✓) shall denote full compliance with a paragraph as a whole. If deviations from the specifications are indicated, and therefore requested by the Contractor, each deviation shall be underlined and denoted by a number in the margin to the right of the identified paragraph, referenced to a detailed written explanation of the reasons for requesting the deviation. The Construction Manager shall be the final authority for determining acceptability of requested deviations. The remaining portions of the paragraph not underlined shall signify compliance on the part of the Contractor with the specifications. Failure to include a copy of the marked-up specification sections, along with justification(s) for any requested deviations to the specification requirements, with the submittal shall be sufficient cause for rejection of the entire submittal with no further consideration.

PART 2 PRODUCTS

2.1 Ready-Mixed Concrete: Ready-mixed concrete shall comply with ASTM C 94, Alternate No. 2. The concrete shall have a slump of not more than three inches. The concrete shall attain a minimum compressive strength of 3,000 PSI at 28 days.

2.2 Base: The Base (top 3 to 6 inches) shall be common borrow material (free of organic material) and shall be tamped using motorized vibratory plate tamper (sheeps foot) before placement of concrete.

2.3 Sub-Base: The Sub-Base shall be cleared, grubbed, and compacted using vibratory plate tamper (Sheep's foot).

2.4 Aggregates: ASTM C33.

2.5 Reinforcement: Welded Wire Mesh (WWM, 6 X 6 X W2.9 X W2.9) in compliance with ASTM A185 & A82 shall be used. WWM shall be cut sheets (not rolled).

2. 6 Expansion Joint Fillers: Expansion Joint Fillers shall comply with ASTM D 1751 or shall be resin impregnated fiberboard complying with ASTM D 1752. One expansion joint filler shall be installed perpendicular to the run of the sidewalk at a distance along the run equal to twice the sidewalk's width. (Example: Sidewalk width is 4' then expansion joint shall be at 8' along the run.) Expansion joint fillers shall also be installed at every junction where new concrete is placed next to existing concrete or structures. The top edge of the expansion joint shall be installed so that the top edge is 2" below the finished concrete surface.

2. 7 Joint Sealers: Joint sealers shall meet ASTM D 1191. Joints shall be clean, dry and free of all scale, dirt, dust, curing compound, and other foreign matter prior to installing joint sealers.

PART 3 EXECUTION

3.1 Form Work: Forms may be metal or wood. Forms shall be oiled before placing concrete. Forms shall be adequately braced, installed, and maintained so that a straight line of sight is established along all edges when straight runs are being constructed. Forms shall not be removed after concrete pour for 24 hours or longer depending on climatic conditions and structural requirements. Place forms so that adequate drainage of water from the concrete sidewalk surface is obtained (min. 1% slope, max. 2%).

3.2 Welded Wire Mesh (WWM): Shall be installed so that the WWM is a minimum of 1.5" from any edge of concrete. WWM shall not be in contact with the base or sub-base at any point. Where necessary to lap, the laps shall be a minimum of six (6) inches.

3.3 Concrete Conveying: Convey concrete to construction areas by methods that will prevent segregation.

3.4 Concrete Placing: Moisten the sub-grade just before the concrete is placed. Place concrete in one layer of such thickness that when compacted and finished the sidewalk will be of the required thickness. Cold weather placing shall be in compliance with ACI 306. Concrete mixture temperature shall not be less than 50 deg. F. Hot weather placing shall be in compliance with ACI 305 and concrete mixture temperature shall not be less than 80 deg. F.

3.5 Edge and Joint Finishing: Carefully finish all edges, including those at formed joints, with an edge tool having the same radius as the existing adjacent concrete sidewalks.

3.6 Construction Joints: Construction Joints shall be installed evenly between expansion joints (tooled joints) along the run so that the surface is divided into areas as shown on the drawings. Construction joints shall be tooled so the radius is the same as adjacent existing joints and shall extend from the finished surface to a 2" minimum depth below the finished concrete surface.

3.7 Joint Sealing: At the end of the curing period, carefully clean and seal expansion joints.

3.8 Portland Cement Concrete Curing: Cure new concrete by protection against loss of moisture and rapid temperature changes for a period not less than 7 days. Leave an access walkway to the building that does not interfere with curing nor create a tripping hazard for pedestrians entering the building.

3.9 Dusting: dusting shall not be allowed.

3.10 Sealing: Sealing shall not be allowed.

3.11 Finishing: The finished concrete surface shall be as follows:

A. New sidewalks: Shall be light broom finished to match existing adjacent sidewalks. Edges and joints shall be tooled as to have a frame effect on the finished surface. The acceptable finished concrete surface at the junction of the broom finish surface and tooled joint shall have no variances in height exceeding 1/8". The acceptable concrete finish surface shall be void of depressions or rises, uneven surfaces, of 1/8" or greater.

B. Patching: The concrete finish shall match existing surrounding concrete finishes, unless otherwise directed by the Owner. Finished surface shall be flush with adjoining concrete surfaces.

3.12 Erosion Control: Erosion control measures shall be undertaken for all work.

END OF SECTION 02630

SECTION 03300

CAST-IN-PLACE CONCRETE

PART 1 - GENERAL

1.1 SCOPE

A. General
1. Contractor shall furnish all labor, materials, equipment and incidentals needed to provide form work, reinforcement, concrete including all concrete joints, grout and incidentals required to complete the Work as shown and specified.
2. The Work includes providing concrete consisting of Portland cement, fine and coarse aggregate, water, and approved admixtures combined, mixed, transported, placed, finished and cured. The Work also includes:
a. Providing openings in concrete to accommodate the Work under this and other Sections and building into the concrete all items such as sleeves, frames, anchor bolts, inserts and all other items to be embedded.

B. Coordination:
1. Review installation procedures under other Sections and coordinate the installation of items that must be installed in the concrete as a prime responsibility of the Contractor.
2. Notify other contractors in advance of the placing of concrete to provide the other contractors with sufficient time for furnishing of items included in their contracts that must be installed in the concrete.
3. Required County formal pour card with all required signatures.

C. Classes of Concrete:
1. Class "A" concrete 4,000 psi compressive strength at 28 days shall be steel reinforced and includes the following:
a. Slab on grade.

1.2 SUBMITTALS

A. The following information shall be provided.
1. A copy of this specification section, with addendum updates included, and all referenced and applicable sections, with addendum updates included, with each paragraph check-marked to indicate specification compliance or marked to indicate requested deviations from specification requirements. Check marks (✓) shall denote full compliance with a paragraph as a whole. If deviations from the specifications are indicated, and therefore requested by the Contractor, each deviation shall be underlined and denoted by a number in the margin to the right of the identified paragraph, referenced to a detailed written explanation of the reasons for requesting the deviation. The Construction Manager shall be the final authority for determining acceptability of requested deviations. The remaining portions of the paragraph not underlined shall signify compliance on the part of the Contractor with the specifications. Failure

to include a copy of the marked-up specification sections, along with justification(s) for any requested deviations to the specification requirements, with the submittal shall be sufficient cause for rejection of the entire submittal with no further consideration.

B. Shop Drawings: Submit for approval the following:
   1. List of concrete materials and concrete mix designs proposed for use. Include the results of all tests performed to qualify the materials and to establish the mix designs.
   2. Copies of manufacturer's specifications with application and installation instructions for proprietary materials and items, including admixtures and bonding agents.

1.3 QUALITY ASSURANCE

A. Reference Standards: Comply with the applicable provisions and recommendations of the latest edition following, except as otherwise shown or specified.
   1. ACI 301-81, Specification for Structural Concrete for Buildings, (includes ASTM Standards referred to herein).
   2. ACI 304-83, Recommended Practice for Measuring, Mixing, Transporting and Placing Concrete.
   3. ACI 318-89, Building Code Requirements for Reinforced Concrete.
   4. ACI 347-78, Recommended Practice for Concrete Formwork.
   5. ASTM C94-86a, Standard Specification for Ready-Mixed Concrete.
   6. ASTM C143-78, Standard Test Method for Slump of Portland Cement Concrete.
   7. ASTM C172-82, Standard Method of Sampling Freshly Mixed Concrete.

1.4 PRODUCT DELIVERY, STORAGE AND HANDLING

A. All materials used for concrete must be kept clean and free from all foreign matter during transportation and handling and kept separate until measured and placed in the mixer. Bins or platforms having hard clean surfaces shall be provided for storage. Suitable means shall be taken during hauling, piling and handling to insure that segregation of the coarse and fine aggregate particles does not occur and the grading is not affected.

PART 2 - PRODUCTS

2.1 CONCRETE MATERIALS

A. Cement:
   1. Portland cement, ASTM C 150, Type II.
   2. Use Portland cement made by a qualified, acceptable manufacturer and produced by not more than one plant.

B. Aggregates: ASTM C 33 and as herein specified.
   1. Do not use aggregates containing soluble salts or other substances such as iron sulfides, pyrite, marcasite, ochre, or other materials that can cause

stains on exposed concrete surfaces. Slag materials are not allowed.

2. Fine Aggregate: Clean, sharp, natural sand free from loam, clay, lumps or other deleterious substances.
   a. Dune sand, bank run sand and manufactured sand are not acceptable.
3. Coarse Aggregate: Clean granitic, uncoated, processed aggregate containing no clay, mud, loam, or foreign matter as follows:
   a. Crushed stone, processed from natural rock or stone.
   b. Coarse Aggregate Size: Size to be ASTM C 33, Nos. 57 or 67, except that No. 467 may be used for footings, foundation mats and walls 16 inches or greater in thickness.

C. Water: Clean, free from injurious amounts of oils, acids, alkalis, organic materials or other substances that may be deleterious to concrete or steel.

2.2 CONCRETE ADMIXTURES

A. Provide admixtures produced by established reputable manufacturers, and use in compliance with the manufacturer's printed instruction. Do not use admixtures, which have not been incorporated and tested in the accepted mixes, unless otherwise authorized in writing by the Engineer.

B. Air-Entraining Admixtures: ASTM C 260.
   1. Product and Manufacturer: Provide one of the following:
      a. MB-VR as manufactured by Master Builders Company.
      b. Sika AER as manufactured by Sika Chemical corporation.
      c. Air Entraining Agent as manufactured by W. R. Meadows.
      d. Or equal.
   2. Air entrainment required for all concrete used on this project.

C. Water-Reducing Admixture: ASTM C 494, Type A.
   1. Proportion all concrete with non-air entraining, normal setting, water-reducing, aqueous solution of a modification of the salt of polyhydroxylated organic acids. The admixture shall not contain more chloride ions than are contained in municipal drinking water. Provide one of the following:
      a. WRDA-86 as manufactured by Grace Construction Products.
      b. Pozzolith by Master Builders Company.
      c. Plastocrete 161 as manufactured by Sika Chemical corporation
      d. Approved Equal.
   2. Water-reducing admixture required for all type A and B concrete unless directed otherwise by the Engineer.

D. Calcium Chloride: Do not use calcium chloride in concrete.

2.3 PROPORTIONING AND DESIGN OF MIXES

A. Prepare design mixes of concrete. Use the same design mix for both classes of concrete. Mixes subject to the following limitations:
   1. Specified 28-day Compressive Strength:
      a. Class A - 4,000 psi.
      b. Class B - 3,000 psi.
   2. Maximum Water-Cement Ratio by Weight: .45.

Coarse Aggregate Number	Minimum Cement Content, Pounds Per Cubic Yard	Percent Air Content
57,67	564	6 ± 1%
467	517	5 1/2 ± 1%

B. Use an independent testing facility approved by the Engineer for preparing and reporting proposed mix designs.
   1. The testing facility shall not be the same as used for field quality control testing.
   2. Calibration charts on the lab equipment must be submitted.

C. Proportion mixes by either laboratory trial batch or field experience methods, using materials to be employed on the Project for concrete required. Comply with ACI 211.1 and report to the Engineer the following data:
   1. Complete identification of aggregate source of supply.
   2. Tests of aggregates for compliance with specified requirements.
   3. Scale weight of each aggregate.
   4. Absorbed water in each aggregate.
   5. Brand, type and composition of cement.
   6. Brand, type and amount of each admixture.
   7. Amounts of water used in trial mixes.
   8. Proportions of each material per cubic yard.
   9. Gross weight and yield per cubic yard of trial mixtures.
   10. Measured slump.
   11. Measured air content.

D. Submit written reports to the Engineer of proposed mix of concrete at least 15 days prior to start of Work. Do not begin concrete production until mixes have been approved by the Engineer.

E. Field Experience Method: When field experience methods are used to select concrete proportions, establish proportions as specified in ACI 301, Chapter 3, Method 2.

F. Water-Cement Ratio Methods: If suitable data from field experience or laboratory trial batches cannot be obtained, concrete proportions may be established as specified in ACI 301, Chapter 3, Method 3.

G. Adjustment to Concrete Mixes: Mix design adjustments may be requested by Contractor when characteristics of materials, job conditions, weather, test results, or other circumstances warrant; at no additional cost to the County and as accepted by Engineer. Laboratory test data for revised mix designs and strength results must be submitted to the Engineer for acceptance before using the revised mixes.

H. Admixtures:
   1. Use air-entraining and water reducer admixtures in all concrete. Add air-entraining admixture at the manufacturer's prescribed rate to result in concrete at the point of placement having air content within the prescribed

limits.

2. Use amounts of admixtures as recommended by the manufacturer for climatic conditions prevailing at the time of placing. Adjust quantities and types of admixtures as required to maintain quality control.

I. Slump Limits:
   1. Proportion and design mixes to result in concrete slump at the point of placement as follows:
      a. For slabs on grade, elevated concrete floor, beams, walls and columns, not less than 1 inch and not more than 4 inches.

2.4 CONCRETE CURING MATERIALS

A. Absorptive Cover: Burlap cloth made from jute of kenaf, weighing approximately 10 ounces per square yard and complying with AASHTO M 182, Class 3.

B. Moisture-Retaining Cover: One of the following, complying with ASTM C 171:
   1. Waterproof paper.
   2. 4 mil polyethylene.

C. Curing and Sealing Compound: ASTM C-309:
   1. Product and Manufacturer: Provide one of the following:
      a. Res-X curing compound as manufactured by the Burke Company.
      b. Masterkure as manufactured by Master Builders Company.
      c. Concrete Curing Compounds as manufactured by W. R. Meadows, Inc.
      d. Or equal.

PART 3 - EXECUTION

3.1 CONCRETE MIXING

A. General:
   1. Concrete may be produced at batch plants or it may be produced by the ready-mixed process. Batch plants shall comply with the recommendations of ACI 304, and shall have sufficient capacity to produce concrete of the qualities specified, in quantities required to meet the construction schedule. All plant facilities are subject to testing laboratory inspection and acceptance of the Engineer.
   2. Mixing:
      a. Mix concrete with an approved rotating type batch machine, except where hand mixing of very small quantities may be permitted.
      b. Remove hardened accumulations of cement and concrete frequently from drum and blades to assure acceptable mixing action.
      c. Replace mixer blades when they have lost 10 percent of their original height.
      d. Use quantities such that a whole number of bags of cement is required, unless otherwise permitted.

B. Ready-Mix Concrete:
   1. Comply with the requirements of ASTM C 94, and as herein specified. Proposed changes in mixing procedures, other than herein specified, must

be accepted by the Engineer before implementation.

a. Plant equipment and facilities: Conform to National Ready Mix Concrete Association "Plant and Delivery Equipment Specification".
b. Mix concrete in revolving type truck mixers which are in good condition and which produce thoroughly mixed concrete of the specified consistency and strength.
c. Do not exceed the proper capacity of the mixer.
d. Mix concrete for a minimum of two minutes after arrival at the job site, or as recommended by the mixer manufacturer.
e. Do not allow the drum to sit while in transit.
f. Mix at proper speed until concrete is discharged.
g. Maintain adequate facilities at the job site for continuous delivery of concrete at the required rates.
h. Provide access to the mixing plant for the Engineer at all times.

C. Maintain equipment in proper operating condition, with drums cleaned before charging each batch. Schedule rates of delivery in order to prevent delay of placing the concrete after mixing, or holding dry-mixed materials too long in the mixer before the addition of water and admixtures.

3.2 TRANSPORTING CONCRETE

A. Transport and place concrete not more than 60 minutes after water has been added to the dry ingredients.

B. Take care to avoid spilling and separation of the mixture during transportation.

C. Do not place concrete in which the ingredients have been separated.

D. Do not retemper partially set concrete, and do not add any water at the jobsite.

E. Use suitable and approved equipment for transporting concrete from mixer to forms.

3.3 CONCRETE PLACEMENT

A. General: Place concrete continuously so that no concrete will be placed on concrete which has hardened sufficiently to cause the formation of seams or planes of weakness within the section. Where new concrete is placed next to existing, or a section cannot be placed continuously, provide construction joints as specified in Section 02630 of these Specifications. Apply approved epoxy bonding agent and waterstop as close as possible to time of actual concrete placement. Do not allow epoxy bonding agent to dry. Deposit concrete as nearly as practical in its final location to avoid segregation due to rehandling or flowing. Do not subject concrete to any procedure which will cause segregation.

1. Screed concrete which is to receive other construction to the proper level to avoid excessive skimming or grouting.
2. Do not use concrete which becomes non-plastic and unworkable, or does not meet the required quality control limits, or which has been contaminated by foreign materials. Do not use retempered concrete. Remove rejected concrete from the job site and dispose of it in an acceptable location.

3. Do not place concrete until all forms, bracing, reinforcement, and embedded items are in final and secure position.
4. Unless otherwise approved, place concrete only when Engineer is present.

B. Concrete Conveying:
1. Handle concrete from the point of delivery and transfer to the concrete conveying equipment and to the locations of final deposit as rapidly as practical by methods which will prevent segregation and loss of concrete mix materials.
2. Provide mechanical equipment for conveying concrete to ensure a continuous flow of concrete at the delivery end. Provide runways for wheeled concrete conveying equipment from the concrete delivery point to the locations of final deposit. Keep interior surfaces of conveying equipment, including chutes, free of hardened concrete, debris, water, snow, ice and other deleterious materials.
3. Do not use chutes for distributing concrete unless approved in writing by the Engineer.
   a. Provide sketches showing methods by which chutes will be employed when requesting such approval.
   b. Design chutes, if permitted, with proper slopes and supports to permit efficient handling of the concrete.
4. Pumping of concrete is permitted, however, do not use aluminum piping to convey the concrete.

C. Placing Concrete Slabs and Sidewalks:
1. Deposit and consolidate concrete slabs in a continuous operation, within the limits of expansion joints, until the placing of a panel or section is completed.
2. Consolidate concrete during placing operations using mechanical vibrating equipment, so that concrete is thoroughly worked around reinforcement and other embedded items and into corners.
3. Bring slab surfaces to the correct level. Smooth the surface, leaving it free of humps or hollows. Do not sprinkle water on the plastic surface. Do not disturb the slab surfaces prior to beginning finishing operations. Coordinate applying contraction joint, per Section 03250, with finishing operations.

D. Bonding for Next Concrete Pour: Comply with Division 02630 and 03300 of these Specifications.

E. Quality of Concrete Work:
1. Make all concrete solid, compact and smooth, and free of laitance, cracks and cold joints.
2. All concrete for liquid retaining structures, and all concrete in contact with earth, water, or exposed directly to the elements shall be watertight.
3. Cut out or chip out and properly replace to the extent ordered by the Engineer, or repair to the satisfaction of the Engineer, surfaces which contain cracks or voids, are unduly rough, or are in any way defective. Thin patches or plastering will not be acceptable.
4. All leaks through concrete, and cracks, holes or other defective concrete in areas of potential leakage, shall be repaired and made watertight by the Contractor.
5. Repair, removal, and replacement of defective concrete as ordered by the

Engineer shall be at no additional cost to the County.

F. Cold Weather Placing:
1. Protect all concrete Work from physical damage or reduced strength which could be caused by frost, freezing actions, or low temperatures, in compliance with the requirements of ACI 306 and as herein specified.

2. When the air temperature has fallen to or may be expected to fall below 40 F, provide adequate means to maintain the temperature, in the area where concrete is being placed, at between 50^0 F and 70^0 F for at least seven days after placing. Provide temporary housings or coverings including tarpaulins or plastic film. Maintain the heat and protection, if necessary, to insure that the ambient temperature does not fall below 30^0 F in the 24 hours following the seven-day period. Avoid rapid dry-out of concrete due to overheating, and avoid thermal shock due to sudden cooling or heating.
3. When air temperature has fallen to or is expected to fall below 40 F, uniformly heat all water and aggregates before mixing as required to obtain a concrete mixture temperature of not less than 55^0 F and not more than 90^0 F at point of placement.
4. Do not use frozen materials containing ice or snow. Ascertain that forms, reinforcing- steel, and adjacent concrete surfaces are entirely free of frost, snow and ice before placing concrete.
5. Do not use salt and other materials containing anti-freeze agents or chemical accelerators, or set-control admixtures, unless approved by the Engineer, in mix designs.

G. Hot Weather Placing:
1. When hot weather conditions exist that would seriously impair the quality and strength of concrete, place concrete in compliance with ACI 305 and as herein specified.
2. Cool ingredients before mixing to maintain concrete temperature at time of placement below 90^0 F when the temperature is rising and below 85^0 F when the temperature is falling. Mixing water may be chilled, or chopped ice may be used to control the concrete temperature provided the water equivalent of the ice is calculated by the Engineer in the total amount of mixing water.
3. Cover reinforcing steel with water-soaked burlap if it becomes too hot, so that the steel temperature will not exceed the ambient air temperature immediately before embedment in concrete.
4. Wet forms thoroughly before placing concrete.
5. Do not place concrete at a temperature so as to cause difficulty from loss of slump, flash set, or cold joints.
6. Do not use set-control admixtures unless approved by the Engineer in mix designs.
7. Obtain ENGINEER'S approval of other methods and materials proposed for use.

3.4 MONOLITHIC SLAB FINISHES

A. Float Finish:
1. After placing concrete slabs, do not work the surface further until ready for floating. Begin floating when the surface water has disappeared or when the

concrete has stiffened sufficiently. Use a wood float only. Check and level the surface plane to a tolerance not exceeding 1/4 inch in 10 feet when tested with a 10 foot straightedge placed on the surface at not less than 2 different angles. Cut down high spots and fill all low spots. Uniformly slope surfaces to drains. Immediately after leveling, refloat the surface to a uniform, smooth, granular texture.

B. Trowel Finish:
   1. After floating, begin the first towel finish operation using a power-finish trowel. Begin final toweling when the surface produces a ringing sound as the trowel is moved over the surface.
   2. Consolidate the concrete surface by final hand toweling. Finish shall be free of trowel marks, uniform in texture and appearance, and with a surface plane tolerance not exceeding 1/8 inch in 10 feet when tested with a 10 foot straight edge, and all edges adjacent to walls will have a struck, tooled intersection joint. Apply to operating floor slab.

C. Non-Slip Broom Finish:
   1. Apply non-slip broom finish to exterior concrete platforms, sidewalks, drives, interior drive areas and elsewhere as shown on the Drawings or in schedules.
   2. Immediately after trowel finishing, slightly roughen the concrete surface by brooming in the direction perpendicular to the main traffic route. Use fiber-bristle broom unless otherwise directed. Coordinate the required final finish with the Engineer before application.

D. Grind Finish:
   1. Where indicated on the Drawings, grind the concrete surface to reveal aggregate. Coordinate the required finish with the Architect.

3.06 CONCRETE CURING AND PROTECTION

A. General:
   1. Protect freshly placed concrete from premature drying and excessive cold or hot temperature, and maintain without drying at a relatively constant temperature for the period of time necessary for hydration of the cement and proper hardening of the concrete.
   2. Start initial curing after placing and finishing concrete as soon as free moisture has disappeared from the concrete surface. Keep continuously moist for not less than 72 hours.
   3. Begin final curing procedures immediately following initial curing and before the concrete has dried. Continue final curing for at least 7 days and in accordance with ACI 301 procedures. Avoid rapid drying at the end of the final curing period.

B. Curing Methods:
   1. Perform curing of all concrete by moist curing or by moisture-retaining cover curing. Use curing compound when approved by the ENGINEER and as herein specified. For curing, use water that is free of impurities which could etch or discolor exposed, natural concrete surfaces.
   2. Provide moisture curing by any of the following methods:

a. Keeping the surface of the concrete continuously wet by covering with water.
b. Continuous water-fog spray.
c. Covering the concrete surface with the specified absorptive cover, thoroughly saturating the cover with water, and keeping the absorptive cover continuously wet with sprinklers or porous hoses. Place absorptive cover so as to provide coverage of the concrete surfaces and edges, with a 4-inch lap over adjacent absorptive covers.

3. Provide moisture-retaining cover curing as follows:
   a. Cover the concrete surfaces with the specified moisture-retaining cover for curing concrete, placed in the widest practical width with sides and ends lapped at least 3 inches and sealed by waterproof tape or adhesive. Immediately repair any holes or tears during the curing period using cover material and waterproof tape.
4. Provide liquid curing compound as follows:
   a. Apply the specified curing and sealing compound to all exposed slabs not receiving chemical hardener or epoxy floor sealer. The compounds shall be applied immediately after final finishing in a continuous operation by power spray equipment in accordance with the manufacturer's directions. Recoat areas which are subjected to heavy rainfall within 3 hours after initial application. Maintain the continuity of the coating and repair damage to the coat during the entire curing period. For concrete surfaces which will be in contact with potable water, the manufacturer shall certify that the curing compound used is nontoxic. Liquid curing compound will only serve as the initial step. Final cure by providing a moisture-retaining cover. Curing compounds with petroleum or wax bases are not acceptable.

C. Curing Unformed Surfaces:
1. Initially cure unformed surfaces, such as slabs, sidewalks and other flat surfaces by applying the specified curing compound.
2. Final cure unformed surfaces, unless otherwise specified, by moisture-retaining cover curing.
3. Provide moisture curing for surfaces receiving chemical hardener or epoxy floor sealer.

D. Temperature of Concrete During Curing:
1. When the atmospheric temperature is 40^0 F and below, maintain the concrete temperature between 50^0 F and 70^0 F continuously throughout the curing period. When necessary, make arrangement before concrete placing for heating, covering, insulation or housing as required to maintain the specified temperature and moisture conditions continuously for the concrete curing period. Provide cold weather protection complying with the requirements of ACI 306.
2. When the atmospheric temperature is 80^0 F and above, or during other climatic conditions which will cause too rapid drying of the concrete, make arrangements before the start of concrete placing for the installation of wind breaks or shading, and for fog spraying, wet sprinkling, or moisture-retaining covering. Protect the concrete continuously for the concrete curing period. Provide hot weather protection complying with the requirements of ACI 305, unless otherwise specified.

3. Maintain concrete temperature as uniformly as possible, and protect from rapid atmospheric temperature changes. Avoid temperature changes in concrete which exceed 5^0 F in any one hour and 50^0 F in any 24 hour period.

E. Protection from Mechanical Injury:
1. During the curing period, protect concrete from damaging mechanical disturbances including load stresses, heavy shock, excessive vibration, and from damage caused by rain or flowing water. Protect all finished concrete surfaces from damage by subsequent construction operations.

3. 7 FIELD QUALITY CONTROL

A. Testing for concrete field quality control shall be performed . Engineer will direct the number of slump tests and cylinders required. Contractor shall make standard compression test cylinders and entrained air tests as specified below, under the direct inspection by the Engineer. Contractor shall furnish all necessary assistance required by the Engineer. Contractor shall also furnish all labor, material and equipment required including cones, rods, molds, air tester, thermometer, curing in a insulated storage box that is heated if necessary and all other incidentals required. Above will be subject to approval by Engineer. Contractor shall furnish all necessary storage, curing, and transportation required by the testing.

B. Quality Control Testing During Construction:
1. Perform sampling and testing for field quality control during the placement of concrete, as follows:
   a. Sampling Fresh Concrete: ASTM C 172.
   b. Slump: ASTM C 143; one for each set of compressive strength test specimens.
   c. Air Content: ASTM C 231; one for each set of compression cylinders cast.
   d. Compressive Strength Tests: ASTM C 39; one set of compression cylinders for each 50 cubic yards of fraction thereof, of each mix design placed in any one day; 1 specimen tested at 3 and 7 days, and 2 specimens tested at 28 days.
      1. Adjust mix if test results are unsatisfactory and resubmit for ENGINEER'S approval.
      2. Concrete which does not meet the strength requirements is subject to rejection and removal from the Work, or to other such corrective measures as directed by the Engineer, at the expense of the Contractor.
   e. Compression Test Specimens: ASTM C 1; make one set of 4 standard cylinders for each compressive strength test, unless otherwise directed.
   f. Concrete Temperature: Test hourly when air temperature is 40 F and below, and when 80 F and above; and each time a set of compression test specimens is made.
2. The testing laboratory shall submit certified copies of test results directly to the Engineer and the Contractor within 24 hours after tests are made.

C. Evaluation of Quality Control Tests:
1. Do not use concrete delivered to the final point of placement which has

slump temperature or total air content outside the specified values.

2. Compressive strength tests for laboratory-cured cylinders will be considered satisfactory if the averages of all sets of thee consecutive compressive strength tests equal or exceed the 28 bay design compressive strength of the type or class of concrete; no individual strength test falls below the required compressive strength by more than 500 psi.
   a. Where questionable field conditions may exist during placing concrete or immediately thereafter, strength tests of specimens cured under field conditions will be required by the Engineer to check the adequacy of curing and protecting of the concrete placed. Specimens shall be molded at the same time and from the same samples as the laboratory cured specimens.
   b. Provide improved means and procedures for protecting concrete when the 28 day compressive strength of field-cured cylinders is less than 85 percent of companion laboratory cured cylinders.
3. When laboratory-cured cylinder strengths are appreciably higher than the minimum required compressive strength, field-cured cylinder strengths need not exceed the minimum required compressive strength by more than 500 psi even though the 85 percent criterion is not met.
   a. If individual tests of laboratory-cured specimens produce strengths more than 500 psi below the required minimum compressive strength, or if tests of field-cured cylinders indicate deficiencies in protection and curing, provide additional measures to assure that the load-bearing capacity of the structure is not jeopardized. If the likelihood of low-strength concrete is confirmed and computations indicate the load-bearing capacity may have been significantly reduced, tests of cores drilled from the area in question will be required at the CONTRACTOR'S expense.
   b. If the compressive strength tests fail to meet the minimum requirements specified, the concrete represented by such tests will be considered deficient in strength and subject to replacement, reconstruction or to other action approved by Engineer, and shall be done at the Contractor's expense.

D. Testing Concrete Structure for Strength:
   1. When there is evidence that the strength of the in-place concrete does not meet specification requirements, Contractor shall employ at his expense the services of a concrete testing service to take cores drilled from hardened concrete for compressive strength determination. Tests shall comply with ASTM C 42 and the following:
      a. Take at least 3 representative cores from each member or suspect area at locations directed by Engineer.
      b. Strength of concrete for each series of cores will be considered satisfactory if their average compressive strength is at least 85 percent and no single core is less than 75 percent of the 28 day required compressive strength, and at least 100% by 56 days.
      c. Report test results in writing to Engineer on the same day that tests are made. Include in test reports the Project identification name and number, date, name of Contractor, nab of concrete testing service, location of test core in the structure, type of class of concrete represented by core sample, nominal maximum size aggregate, design

compressive strength, compression breaking strength and type of break (corrected for length-diameter ratio), direction of applied load to core with respect to horizontal plane of the concrete as placed, and the moisture condition of the core at time of testing.

2. Fill core holes solid with patching mortar, and finish to match adjacent concrete surfaces.
3. Conduct static load test and evaluations complying with ACI 318 if the results of the core tests are unsatisfactory, or if core tests are impractical to obtain, as directed by Engineer.

E. Filling-In:
1. Fill-in holes and openings left in concrete structures for the passage of work by other contractors and as indicated on drawings, with non-shrink nonmetallic grout.
2. Dry packing will be approved by the Engineer on case by case basis.

3. 9 CONCRETE REPAIRS

A. Repair of Unformed Surfaces:

1. Test unformed surfaces, such as monolithic slabs, for smoothness and to verify surface plane to the tolerances specified for each surface and finish. Correct low and high areas as herein specified.
2. Test unformed surfaces sloped to drain for trueness of slope, in addition to smoothness, using a template having the required slope. Correct high and low areas as herein specified.
3. Repair finish of unformed surfaces that contain defects which adversely affect the durability of the concrete. Surface defects, as such, include crazing, cracks in excess of 0.01-inch wide or which penetrate to the reinforcement or completely through nonreinforced sections regardless of width, spalling, popouts, honeycomb, rock pockets, and other objectionable conditions.
4. Grout structural cracks, and cracks in water holding structures, using one of the following:
   a. Sikadur 35, Hi-Mod LV Gel by Sika Chemical Company.
   b. 881 LPL Epoxy by the Burke Co.
   c. Or equal.
5. Correct high areas in unformed surfaces by grinding, after the concrete has cured sufficiently so that repairs can be made without damage to adjacent area.
6. Correct low areas in unformed surfaces during, or immediately after completion of surface finishing operations by cutting out the low areas and replacing with fresh concrete. Finish repaired areas to blend into adjacent concrete. Use one of the following:
   a. Mastertop MP by Master Builders.
   b. Sikatop by Sika Chemical Company.
   c. Or equal.
7. Repair defective areas, except random cracks and single holes not exceeding 1-inch diameter, by cutting out and replacing with fresh concrete. Remove defective areas to sound concrete with clean, square cut, and

expose reinforcing steel with at least 3/4-inch clearance all around. Dampen all concrete surfaces in contact with patching concrete and brush with the specified bonding agent. Place patching concrete before grout takes its initial set. Mix patching concrete of the same materials and proportions to provide concrete of the same type or class as the original adjacent concrete. Place, compact and finish as required to blend with adjacent finished concrete. Cure in the same manner as adjacent concrete.

8. Repair isolated random cracks, and single holes not over 1-inch diameter, by the dry-pack method. Groove the top of cracks, and cut out holes to sound concrete and clean of dust, dirt and loose particles. Dampen all cleaned concrete surfaces and brush with the specified bonding agent. Place dry-pack before 'the cement grout takes its initial set. Mix dry-pack, consisting of 1 part portland cement to 2-1/2 parts fine aggregate passing a No. 16 mesh sieve, using only enough water as required for handling and placing. Compact dry-pack mixture in place and finish to match adjacent concrete. Keep patched areas continuously moist for not less than 72 hours.
9. Repair methods not specified above may be used if approved by the Engineer.

+ + + END OF SECTION 03300 + + +

SECTION 06100

ROUGH CARPENTRY

GENERAL

RELATED DOCUMENTS

Drawings and general provisions of the Contract, including General and Supplementary Conditions and Division 1 Specification Sections, apply to this Section.

SUMMARY

This Section includes the following:
Wood blocking and nailers.
Plywood backing panels.

SUBMITTALS

The following information shall be provided in accordance with Section 01330.

1. A copy of this specification section, with addendum updates included, and all referenced and applicable sections, with addendum updates included, with each paragraph check-marked to indicate specification compliance or marked to indicate requested deviations from specification requirements. Check marks (✓) shall denote full compliance with a paragraph as a whole. If deviations from the specifications are indicated, and therefore requested by the Contractor, each deviation shall be underlined and denoted by a number in the margin to the right of the identified paragraph, referenced to a detailed written explanation of the reasons for requesting the deviation. The Construction Manager shall be the final authority for determining acceptability of requested deviations. The remaining portions of the paragraph not underlined shall signify compliance on the part of the Contractor with the specifications. Failure to include a copy of the marked-up specification sections, along with justification(s) for any requested deviations to the specification requirements, with the submittal shall be sufficient cause for rejection of the entire submittal with no further consideration.

DEFINITIONS

Lumber grading agencies, and the abbreviations used to reference them, include the following:
NeLMA: Northeastern Lumber Manufacturers' Association.
NLGA: National Lumber Grades Authority.
WWPA: Western Wood Products Association

SUBMITTALS

Product Data: For each type of process and factory-fabricated product. Indicate component materials and dimensions and include construction and application details.

Include data for wood-preservative treatment from chemical treatment manufacturer and certification by treating plant that treated materials comply with requirements. Indicate type of preservative used and net amount of preservative retained.

For products receiving a waterborne treatment, include statement that moisture content of treated materials was reduced to levels specified before shipment to Project site.

Material Certificates: For dimension lumber specified to comply with minimum allowable unit stresses. Indicate species and grade selected for each use and design values approved by the ALSC Board of Review.

Research/Evaluation Reports: For the following, showing compliance with building code in effect for Project:
Wood-preservative-treated wood.
Fire-retardant-treated wood.
Power-driven fasteners.
Powder-actuated fasteners.
Expansion anchors.
Metal framing anchors.

QUALITY ASSURANCE

Source Limitations for Engineered Wood Products: Obtain each type of engineered wood product through one source from a single manufacturer.

DELIVERY, STORAGE, AND HANDLING

Stack lumber flat with spacers between each bundle to provide air circulation. Provide for air circulation around stacks and under coverings.

PRODUCTS

WOOD PRODUCTS, GENERAL

Lumber: DOC PS 20 and applicable rules of grading agencies indicated. If no grading agency is indicated, provide lumber that complies with the applicable rules of any rules-writing agency certified by the ALSC Board of Review. Provide lumber graded by an agency certified by the ALSC Board of Review to inspect and grade lumber under the rules indicated.

Factory mark each piece of lumber with grade stamp of grading agency.

For exposed lumber indicated to receive a stained or natural finish, mark grade stamp on end or back of each piece.

Where nominal sizes are indicated, provide actual sizes required by DOC PS 20 for moisture content specified. Where actual sizes are indicated, they are minimum dressed sizes for dry lumber.
Provide dressed lumber, S4S, unless otherwise indicated.

WOOD-PRESERVATIVE-TREATED LUMBER

Preservative Treatment by Pressure Process: AWPA C2 except that lumber that is not in contact with the ground and is continuously protected from liquid water may be treated according to AWPA C31 with inorganic boron (SBX).
Preservative Chemicals: Acceptable to authorities having jurisdiction and containing no arsenic or chromium.

Kiln-dry lumber after treatment to a maximum moisture content of 19 percent. Do not use material that is warped or does not comply with requirements for untreated material.

Mark lumber with treatment quality mark of an inspection agency approved by the ALSC Board of Review.
For exposed lumber indicated to receive a stained or natural finish, mark end or back of each piece or omit marking and provide certificates of treatment compliance issued by inspection agency.

Application: Treat all rough carpentry, unless otherwise indicated. Items indicated on Drawings, and the following:
Wood sills, sleepers, blocking, furring, stripping and similar concealed members in contact with masonry or concrete.
Wood framing members that are less than 18 inches (460 mm) above the ground in crawlspaces or unexcavated areas.
Wood floor plates that are installed over concrete slabs-on-grade.

DIMENSION LUMBER FRAMING

Maximum Moisture Content: 15 percent for 2-inch nominal thickness or less, 19 percent for more than 2-inch nominal thickness.
Non-Load-Bearing Interior Partitions: No. 2 Standard grade lumber with 19 percent maximum moisture content and the following species:
Mixed southern pine; SPIB.
Spruce-pine-fir; NLGA

MISCELLANEOUS LUMBER

General: Provide miscellaneous lumber indicated and lumber for support or attachment of other construction, including the following:
Blocking.
Nailers.
Furring.
Grounds.
Utility shelving.

For items of dimension lumber size, provide No. 2 Standard grade lumber with 19 percent maximum moisture content and the following species:
Mixed southern pine; SPIB.
Spruce-pine-fir; NLGA.

For concealed boards, provide lumber with 15 percent maximum moisture content and any of the following species and grades:
Mixed southern pine, No. 2 grade; SPIB.
2. Spruce-pine-fir (south) or spruce-pine-fir, Construction Standard grade; NeLMA, NLGA, WCLIB, or WWPA.

For blocking not used for attachment of other construction, Utility, Stud, or No. 3 grade lumber of any species may be used provided that it is cut and selected to eliminate defects that will interfere with its attachment and purpose.

For blocking and nailers used for attachment of other construction, select and cut lumber to eliminate knots and other defects that will interfere with attachment of other work.

FASTENERS

General: Provide fasteners of size and type indicated that comply with requirements specified in this Article for material and manufacture.

Where rough carpentry is exposed to weather, in ground contact, pressure-preservative treated, or in area of high relative humidity, provide fasteners with hot-dip zinc coating complying with ASTM A 153/A 153M or Type 304 stainless steel.

Nails, Brads, and Staples: ASTM F 1667.

Power-Driven Fasteners: NES NER-272.

Wood Screws: ASME B18.6.1.

Lag Bolts: ASME B18.2.1 (ASME B18.2.3.8M).

Bolts: Steel bolts complying with ASTM A 307, Grade A (ASTM F 568M, Property Class 4.6); with ASTM A 563 (ASTM A 563M) hex nuts and, where indicated, flat washers.

Expansion Anchors: Anchor bolt and sleeve assembly of material indicated below with capability to sustain, without failure, a load equal to 6 times the load imposed when installed in unit masonry assemblies and equal to 4 times the load imposed when installed in concrete as determined by testing per ASTM E 488 conducted by a qualified independent testing and inspecting agency.
Indoor Material: Carbon-steel components, zinc plated to comply with ASTM B 633, Class Fe/Zn 5.

Outdoor Material: Stainless steel with bolts and nuts complying with ASTM F 593 and ASTM F 594, Alloy Group 1 or 2 (ASTM F 738M and ASTM F 836M, Grade A1 or A4).

METAL FRAMING ANCHORS

Available Manufacturers: Subject to compliance with requirements, manufacturers offering products that may be incorporated into the Work include, but are not limited to, the following:

Manufacturers: Subject to compliance with requirements, provide products by one of the following:

Basis-of-Design Products: Subject to compliance with requirements, provide products indicated on Drawings and comparable products by one of the following:
Alpine Engineered Products, Inc.
Cleveland Steel Specialty Co.
Harlen Metal Products, Inc.
KC Metals Products, Inc.
Simpson Strong-Tie Co., Inc.
Southeastern Metals Manufacturing Co., Inc.
USP Structural Connectors.

Allowable Design Loads: Provide products with allowable design loads, as published by manufacturer, that meet or exceed those indicated and products of manufacturers listed. Manufacturer's published values shall be determined from empirical data or by rational engineering analysis and demonstrated by comprehensive testing performed by a qualified independent testing agency.

Galvanized Steel Sheet: Hot-dip, zinc-coated steel sheet complying with ASTM A 653/A 653M, G60 (Z180) coating designation.
Use for interior locations where stainless steel is not indicated.

Stainless-Steel Sheet: ASTM A 666, Type 304.
Use for exterior locations and where indicated.

MISCELLANEOUS MATERIALS

Sill-Sealer Gaskets: Glass-fiber-resilient insulation, fabricated in strip form, for use as a sill sealer; 1-inch nominal thickness, compressible to 1/32 inch; selected from manufacturer's standard widths to suit width of sill members indicated.

Adhesives for Gluing and Sleepers to Concrete or Masonry: Formulation complying with ASTM D 3498 that is approved for use indicated by adhesive manufacturer.
Use adhesives that have a VOC content of 70 g/L or less when calculated according to 40 CFR 59, Subpart D (EPA Method 24).

EXECUTION

INSTALLATION, GENERAL

Set rough carpentry to required levels and lines, with members plumb, true to line, cut, and fitted. Fit rough carpentry to other construction; scribe and cope as needed for accurate fit. Locate, nailers, blocking, grounds and similar supports to comply with requirements for attaching other construction.

Framing Standard: Comply with AF&PA's "Details for Conventional Wood Frame Construction," unless otherwise indicated.

Framing with Engineered Wood Products: Install engineered wood products to comply with manufacturer's written instructions.

Metal Framing Anchors: Install metal framing to comply with manufacturer's written instructions.

Do not splice structural members between supports, unless otherwise indicated.

Provide blocking and framing as indicated and as required to support facing materials, fixtures, specialty items, and trim.

Provide metal clips for fastening gypsum board or lath at corners and intersections where framing or blocking does not provide a surface for fastening edges of panels. Space clips not more than 16 inches o.c.

Sort and select lumber so that natural characteristics will not interfere with installation or with fastening other materials to lumber. Do not use materials with defects that interfere with function of member or pieces that are too small to use with minimum number of joints or optimum joint arrangement.

Comply with AWPA M4 for applying field treatment to cut surfaces of preservative-treated lumber.

Use inorganic boron for items that are continuously protected from liquid water.

Use copper naphthenate for items not continuously protected from liquid water.

Securely attach rough carpentry work to substrate by anchoring and fastening as indicated, complying with the following:

NES NER-272 for power-driven fasteners.

Table 2304.9.1, "Fastening Schedule," in ICC's International Building Code.

Table 2306.1, "Fastening Schedule," in SBCCI's Standard Building Code.

Table R602.3(1), "Fastener Schedule for Structural Members," and Table R602.3(2), "Alternate Attachments," in ICC's International Residential Code for One- and Two-Family Dwellings.

Use common wire nails, unless otherwise indicated. Select fasteners of size that will not fully penetrate members where opposite side will be exposed to view or will receive finish materials. Make tight connections between members. Install fasteners without splitting wood; do not countersink nail heads, unless otherwise indicated.

WOOD GROUND, SLEEPER, BLOCKING, AND NAILER INSTALLATION

Install where indicated and where required for screeding or attaching other work. Form to shapes indicated and cut as required for true line and level of attached work. Coordinate locations with other work involved.

Attach items to substrates to support applied loading. Recess bolts and nuts flush with surfaces, unless otherwise indicated.

WOOD FURRING INSTALLATION

Install level and plumb with closure strips at edges and openings. Shim with wood as required for tolerance of finish work.

Furring to Receive Gypsum Board: Install 1-by-2-inch nominal size furring vertically at 16 inches o.c.

WALL AND PARTITION FRAMING INSTALLATION

General: Provide single bottom plate and double top plates using members of 2-inch nominal thickness whose widths equal that of studs, except single top plate may be used for non-load-bearing partitions and for load-bearing partitions where framing members bearing on partition are located directly over studs. Fasten plates to supporting construction, unless otherwise indicated.

For interior partitions and walls, provide 2-by-4-inch nominal size wood studs spaced 16 inches o.c., unless otherwise indicated.

Provide continuous horizontal blocking at midheight of partitions more than 96 inches high, using members of 2-inch nominal thickness and of same width as wall or partitions.

Construct corners and intersections with three or more studs, except that two studs may be used for interior non-load-bearing partitions.

Frame openings with multiple studs and headers. Provide nailed header members of thickness equal to width of studs. Support headers on jamb studs.

For non-load-bearing partitions, provide double-jamb studs and headers not less than 4-inch nominal depth for openings 48 inches and less in width, 6-inch nominal depth for openings 48 to 72 inches in width, 8-inch nominal depth for openings 72 to 120 inches in width, and not less than 10-inch nominal depth for openings 10 to 12 feet in width.

Provide triple joists separated as above, under partitions receiving ceramic tile and similar heavy finishes or fixtures.

Provide bridging of type indicated below, at intervals of 96 inches o.c., between joists.

Diagonal wood bridging formed from bevel-cut, 1-by-3-inch nominal size lumber, double-crossed and nailed at both ends to joists.

Steel bridging installed to comply with bridging manufacturer's written instructions.

PROTECTION

Protect wood that has been treated with inorganic boron (SBX) from weather. If, despite protection, inorganic boron-treated wood becomes wet, apply EPA-registered borate treatment. Apply borate solution by spraying to comply with EPA-registered label.

Protect rough carpentry from weather. If, despite protection, rough carpentry becomes wet, apply EPA-registered borate treatment. Apply borate solution by spraying to comply with EPA-registered label.

+ + + END OF SECTION 06100 + + +

SECTION 06200
FINISH CARPENTRY

PART 1 GENERAL

1.1 SUMMARY

A. Related Work specified elsewhere:
   1. Section 06100 - Rough Carpentry
   2. Section 07900 - Sealants and Caulking
   3. Section 09260 - Gypsum Board Systems
   4. Section 09900 - Painting

1.2 REFERENCES

A. Standards of the following as referenced:
   1. Architectural Woodwork Institute (AWI)
   2. American National Standards Institute (ANSI)
   3. National Electrical Manufacturer's Association (NEMA)

B. Industry standards:
   1. AWI: Quality Standards, Guide Specifications and Quality Certification Program, 1985 edition.

C. Grading rules and standards of the following apply to materials, furnished under this section:
   1. American Lumber Standards Committee (ALSC).
   2. American Plywood Association (APA).
   3. National Hardwood Lumber Association (NHLA).
   4. National Bureau of Standards (NBS) Voluntary Product Standards (PS).
   5. Southern Forest Products Association (SFPA).
   6. Southern Pine Inspection Bureau (SPIB).
   7. West Coast Lumber Inspection Bureau (WCLIB).
   8. Western Wood Products Association (WWPA).

D. Preservative treated material: Meet specified standards of:
   1. American Wood Preservers Association (AWPA).
   2. American Wood Preservers Bureau (AWPB).
   3. American Wood Preservers Institute (AWPI).

E. Plywood grading rules:
   1. Softwood plywood: NBS PS-1-83.
   2. Hardwood plywood: NBS PS-51-71.

1.3 SUBMITTALS

A. The following information shall be provided.

1. A copy of this specification section, with addendum updates included, and all referenced and applicable sections, with addendum updates included, with each paragraph check-marked to indicate specification compliance or marked to indicate requested deviations from specification requirements. Check marks (✓) shall denote full compliance with a paragraph as a whole. If deviations from the specifications are indicated, and therefore requested by the Contractor, each deviation shall be underlined and denoted by a number in the margin to the right of the identified paragraph, referenced to a detailed written explanation of the reasons for requesting the deviation. The Construction Manager shall be the final authority for determining acceptability of requested deviations. The remaining portions of the paragraph not underlined shall signify compliance on the part of the Contractor with the specifications. Failure to include a copy of the marked-up specification sections, along with justification(s) for any requested deviations to the specification requirements, with the submittal shall be sufficient cause for rejection of the entire submittal with no further consideration.

B. Shop drawings:
   1. Submit for casework, standing and running trim, shelving, and miscellaneous ornamental work.
   2. Indicate construction and installation details, species and grades of materials, finishes, plastic laminate selections, and cabinet hardware selections.

C. Product data: Submit for cabinet hardware and similar manufactured items. Submit with shop drawings.

D. Samples, submit as follows:
   1. Plastic laminate: Manufacturer's standard color and pattern selection for verification by Construction manager.
   2. Finish samples: Indicate selected finishes on samples of species and grade material specified.
   3. Hardware items: Submit, if requested by Construction manager. Samples will be returned to supplier.

1.4 DELIVERY, STORAGE, AND HANDLING

A Schedule delivery of finish carpentry Work to Project site to coincide with installation but not to cause delay in Work.
B. Immediately upon delivery to Project site, place materials indoors, under cover, protected from weather.
C. Store materials minimum 6" above ground on framework or blocking; cover with protective waterproof covering providing for adequate air circulation and ventilation. Store in cool, dry, conditioned space.

1.5 PROJECT CONDITIONS

A. Field measurements: Take field measurements to determine exact millwork

sizes. Indicate exact dimensions on shop drawings.

B. Installation of interior finish carpentry or millwork until spaces are enclosed, dry, and capable of being heated is prohibited. Maintain temperature between 55^0 F and 65^0 F for 72 hours before beginning installation and for Project duration.

PART 2 – PRODUCTS

2.1 MATERIALS

A. General:
1. Dimensions: Indicated lumber dimensions are nominal. Actual dimensions conform to industry standards established by ALSC and the Rules Writing Agencies.
2. Moisture content: 12% maximum.
3. Surfacing: Surface four sides, S4S, unless otherwise indicated.
4. Grades for exposed and semi-exposed finish carpentry and millwork and plywood are based on AWI Quality Standards. Grades for unexposed Work are based on Rules Writing Agencies grading rules.

B. Lumber:
1. Species and grades:
   a. Unexposed millwork framing and blocking:
      1) 2" by 4": Standard Grade West Coast Lumber.
      2) Members larger than 2" by 4": #2 Grade.
   b. Semi-exposed millwork components: Custom Grade Poplar.
   c. Exposed and semi-exposed painted millwork and trim: Custom Grade White Pine, kiln dried (KD) or as indicated on drawings.
2. Plywood; thicknesses indicated:
   a. Unexposed and semi-exposed millwork and general carpentry: APA A-C G-1, EXTERIOR
   b. Exposed painted millwork: APA M.D. OVERLAY, GROUP 1, EXT. exposed sides.
3. Plastic laminate substrate:
   a. Particleboard for wall cabinets: ANSI 208.1-87, three-ply, mat formed, manufactured using long fibered cuttings, bonded with water-resistant adhesive; 42.5 pcf, minimum.
   b. Plywood for base cabinets and countertops: ANSI/HPMA HP 1983; five-ply, rotary cut birch; 1/8" thickness, minimum, Grade 2-2 veneers; sanded face; Technical Type core.
   c. Thickness: ¾ - inch, minimum.
4. Plastic laminates:
   a. Acceptable manufacturers:
      1. Exxon Chemical Company; Nevamar.
      2. Formica Corp.; Formica.
      3. Lamin-Art Div. of Eagle Picher Inc.; Lamin-Art.
      4. Ralph Wilson Plastics Company; Wilson-Art.
   b. Conforming to NEMA Standard LD-3.1-1985, as follows:
      1. Horizontal applications: Grade GP-50.
      2. Backing sheet: Grade BK-20.

3. Horizontal post-forming: Grade PF-42.

c. Colors and patterns: Indicated in Finish Schedule on drawings as PL#1, to match existing.

C. Fasteners: Provide bolts, nuts, washers: screws toggle bolts and similar fasteners as indicated or required to attach and secure Work under this section.

2.2 FABRICATION

A. Shop assembly:
1. Comply with applicable requirements of AWI.
2. Quality standards for following types of architectural woodwork; comply with indicated standards as applicable:
   a. Standing trim, running trim, and rails: AWI Section 300, Custom Grade.
   b. Architectural cabinets, laminate clad: AWI Sections 400 for Flush Overlay and 400B; Premium Grade.
   c. Architectural cabinets, tops: AWI Sections 400 for High Pressure Decorative Laminate Tops and 400C for Custom Grade.
   d. Shelving: AWI Section 600: Custom Grade.
   e. Miscellaneous ornamental items: AWI Section 700.
3. Provide joints at logical break points for items which cannot be manufactured in one piece; note joints on shop drawings.

B. Shop finishing:
1. Finish millwork items in accord with finishing requirements of allowable AWI Grade indicated unless otherwise indicated.
2. Provide finish Work smooth, free from abrasion, tool marks, raised grain, and other Grade prohibited defects on exposed surfaces.

C. Tolerances: Fabricate millwork items for Reception Area and Break Area to AWI Custom Grade unless otherwise indicated.

2.3 SOURCE QUALITY CONTROL

A. Inspection:
1. Grade marks:
   a. General: Identify lumber and plywood by official grade mark.
   b. Lumber grade stamp: Contain symbol of grading agency, mill number or name, grade of lumber, species or species grouping or combination designation, rules under which graded, where applicable, and condition of seasoning at time of manufacture.
   c. Plywood: Appropriate grade trademark of APA. Indicate type, grade, class and identification index, and inspection and testing agency mark.
   d. Treated lumber and plywood: Identify each piece with appropriate UL stamp indicating compliance with indicated requirements; verify stamp contains treatment name, manufacturer, and location; third party inspection agency: species; flame spread; AWPA classification; 30 minute test characteristics.

e. Conceal grade marks on components exposed to view in finished Work.

PART 3 – EXECUTION

3.1 PREPARATION

A. General:
1. Install Work plumb, level, true, and straight without distortions; conceal shims.
2. Provide finish Work smooth, free from abrasion, tool marks, raised grain markings or similar defects on exposed surfaces.
3. Cut Work to fit unless specified to be shop fabricated or shop cut to exact size. Where carpentry and millwork abuts other finished Work, scribe and cut for accurate fit. Drill pilot holes at corners before making cutouts.
4. Distribute defects allowed in quality grade specified to best overall advantage when installing job assembled Work.
5. Install mill fabricated Work in accord with AWI Section 1700.

3.2 INSTALLATION

A. Interior standing and running trim:
1. Trim and moldings: Install in single, un-jointed lengths for openings and for runs less than 10'-0". Use only one piece less than 10' -0" long in longer straight runs Stagger joints in adjacent members. Cope at returns and miter at corners.
2. Attach and secure in place with uniform joints providing for thermal and building movements.
3. Nailing: Blind nail where possible. Use finishing nails where exposed. Set exposed nail heads for filling.
4. Anchoring: Secure Work to anchors or blocking built-in or directly attached to substrate.

B. Millwork:
1. Install in manner consistent with specified quality grade, plumb, level, true, and straight without distortions: shim as required using concealed shims.
2. Secure to grounds, stripping, and blocking with countersunk, concealed fasteners and blind nailing. Scribe and cut for accurate fit to other finished Work.

C. Hardware: Install where indicated in accord with particular hardware specialty manufacturer's installation instructions.

D. Countertops: Install countertops in accord with AWI Custom Grade.

3.3 CLEANING

A. Clean wood, metal, and accessory items using neutral cleaner. Check and

correct operating mechanisms for proper operation. Adjust and lubricate hinges, catches, and other operating hardware.

3.4 PROTECTION

A. Protect finished and prefinished surfaces from Work of other trades.

B. Prior to Date of Substantial Completion examine Work for damage. Repair or replace damaged areas to original condition.

+ + + END OF SECTION 06200 + + +

SECTION 07840

FIRESTOPPING

PART 1 GENERAL

1.1 Description of Work

A. This specification covers the furnishing and installation of materials for firestopping. Products shall be as directed by the Owner. Installation procedures shall be in accordance with the product manufacturer's recommendations. Demolition and removal of materials shall be as required to support the work.

1.2 General

A. System Description
1. Performance Requirements: Comply with following:
a. Firestopping: Consist of material or combination of materials to form effective barrier against spread of flame, smoke, and gases, and maintain integrity of fire-resistance rated walls, partitions, floors, and ceiling-floor assemblies at penetrations.
1) Penetrations: Include annular space around pipes, ducts, chimneys, tubes, conduit, wires, cables, and vents.

B. Submittals
1. The following information shall be provided.
a. A copy of this specification section, with addendum updates included, and all referenced and applicable sections, with addendum updates included, with each paragraph check-marked to indicate specification compliance or marked to indicate requested deviations from specification requirements. Check marks (✓) shall denote full compliance with a paragraph as a whole. If deviations from the specifications are indicated, and therefore requested by the Contractor, each deviation shall be underlined and denoted by a number in the margin to the right of the identified paragraph, referenced to a detailed written explanation of the reasons for requesting the deviation. The Construction Manager shall be the final authority for determining acceptability of requested deviations. The remaining portions of the paragraph not underlined shall signify compliance on the part of the Contractor with the specifications. Failure to include a copy of the marked-up specification sections, along with justification(s) for any requested deviations to the specification requirements, with the submittal shall be sufficient cause for rejection of the entire submittal with no further consideration.

2. Product Data:
a. Composition and performance characteristics.

b. List of FM, UL, or WH classification number of systems installed.

3. Quality Assurance/Control Submittals:
   a. Test Reports: If not FM, UL, or WH listed, submit certified test results for ASTM E 814 tests by UL, FM, WH, or other accredited independent laboratory demonstrating compliance of firestopping with specified requirements.
   b. Manufacturers installation instructions.

C. Quality Assurance
1. Regulatory Requirements: Comply with applicable building-code requirements for firestopping.

D. Delivery, Storage, and Handling
1. Packing, Shipping, Handling, and Unloading: Deliver in original, unopened containers with manufacturer's labels.
   a. Products: FM, UL, or WH labeled and FM, UL, or WHI listed.

2. Storage and Protection: Store firestopping materials in accordance with manufacturer's recommendations.

PART 2 PRODUCTS

2.1 Materials

A. Fire-Rated Penetration Sealant Systems
1. Firestopping Materials: Commercially manufactured asbestos-free products complying with following minimum requirements:
   a. Material:
      1) Flame Spread: ASTM E 84 or UL 723, 25 or less.
      2) Smoke Developed Rating: ASTM E 84 or UL 723, 50 or less.
      3) Material: Approved firestopping material as listed in UL 05, FM P7825, or WH Certified Listing.
   b. Material Properties:
      1) Contain no flammable or toxic solvents and have no dangerous or flammable outgassing during the drying or curing of products.
      2) Non-toxic to human beings at all stages of application and during fire conditions.
      3) Water-resistant after drying or curing and unaffected by high humidity, condensation, or transient water exposure.
   c. Devices and systems requiring heat activation to seal opening created by burning or melting of penetrant shall exhibit demonstrated ability to function as required for floors and walls of construction and thickness similar to those to be firestopped.
2. Firestopping System Requirements: Materials from single manufacturer capable of maintaining effective barrier against flame, smoke, and gases in accordance with ASTM E 814 and UL 1479.
   a. Fire-Resistance Rating: Equal or greater than fire-resistance rating of assembly in which it is being placed.
   b. F Ratings: Equal to or greater than fire-resistance rating of assembly penetrated.

c. T Ratings: Equal to or greater than fire-resistance rating of assembly penetrated at following locations:
   1) Penetrations located outside of wall cavities.
   2) Penetrations located outside of fire-resistive shaft enclosures.
   3) Penetrations located in enclosures with doors required to have temperature-rise rating.
   4) Penetrations with penetrating hems larger than 100 mm (4 inch) diameter nominal pipe or 10 320 sq. mm (16 square inches) in cross-sectional area.
d. System: Listed in UL 05, FM 7825, or WH Certified Listing, or tested by approved laboratory in accordance with ASTM E 814.
e. System: Suitable for firestopping of penetrations made by steel, glass, plastic and insulated pipe.
f. Penetration by Insulated Pipe: Does not require removal of insulation.

PART 3 EXECUTION

3.1 Examination

A. Verification of Conditions:
   1. Existing Conditions: Examine penetrations before beginning installation.
   2. Do not proceed with installation until conditions are satisfactory.

3. 2 Installation

A. Fire-Rated Penetration Sealant Systems: Install in accordance with UL 05, FM P7825, or WH systems and manufacturers recommendations to maintain required fire-separation rating.
   1. Preparation: Clean surfaces in contact with firestopping materials that may affect proper fitting or required fire rating. Prime if required. Dam void if required.
   2. Penetrations: Completely fill void with sealant materials to smooth surface, flush with adjacent surfaces and in contact with surfaces formed by openings and penetrating items ensuring adhesion. Provide sealant in thickness to achieve required fire rating and smoke barrier.
   3. Firestopping at Voids 100 mm (4 inches) or More in Any Direction: Capable of supporting same load as floor is designed to support or protected by permanent barrier.
   4. Remove any excess sealant from adjacent surfaces.

B. Firestopping: Provide at following locations:
   1. Penetrations of duct, chimney, conduit, tubing, cable, and pipe through floors and through fire-resistance rated walls, partitions, and ceiling-floor assemblies.
   2. Penetrations of vertical shafts such as pipe chases, elevator shafts, and utility chutes.
   3. Gaps at intersection of fire-rated floor stabs and walls.
   4. Gaps at perimeter of fire-rated walls and partitions, such as between top of walls and bottom of floor or roof decks.
   5. Construction joints in fire-rated floors, walls, and partitions.
   6. Other locations where required to maintain fire-resistance rating of the construction.

7. Other locations as indicated on Drawings (if any).

3.3 Field Quality Control

A. Inspection: Examine areas to be firestopped prior to concealing or enclosing to ensure proper installation.

1. Keep areas of firestopping work accessible until inspection by authorities having jurisdiction over work.

END OF SECTION 07840

SECTION 07900

CAULKING AND SEALANTS

PART 1 - GENERAL

1. 1 SCOPE OF WORK

A. The Contractor shall furnish all materials, labor, equipment, and incidentals required to perform all caulking, and related work necessary for the proper completion of the project as required by the Drawings and as specified herein.

B. Contract drawings show only functional features and some of the required external connections. They do not show all components required for a complete installation nor exact dimensions particular to any manufacturer's equipment. Contractor shall supply all parts, devices and equipment necessary to meet the requirements of the Contract Documents and shall make all dimensional adjustments particular to the equipment being furnished. All costs associated with such changes and adjustments shall be considered as being included in the price bid for the Work shown and specified.

1.2 APPLICATION SCHEDULE

A. Caulk all exterior wall joints between frames in openings and adjacent materials, between masonry and cast in place concrete, expansion and control joints and all other joints shown on the Drawings or required for the completion of the work.

B. Caulk all interior joints between frames and masonry, at tops of masonry walls, between masonry and structural concrete and control joints, exterior window and door frames and all other joints shown on the drawings or required for the completion of the work.

C. Joints of similar nature to those indicated shall be sealed with same sealer, whether indicated on Drawings to be sealed or not.

1.3 SUBMITTALS

E. The following information shall be provided.

1. A copy of this specification section, with addendum updates included, and all referenced and applicable sections, with addendum updates included, with each paragraph check-marked to indicate specification compliance or marked to indicate requested deviations from specification requirements. Check marks (✓) shall denote full compliance with a paragraph as a whole. If deviations from the specifications are indicated, and therefore requested by the Contractor, each deviation shall be underlined and denoted by a number in the margin to the right of the identified paragraph, referenced to a detailed written explanation of the reasons for requesting the deviation. The Construction Manager shall be the final authority for determining acceptability of requested deviations. The remaining portions of the paragraph not underlined shall signify compliance on the part of the Contractor with the specifications. Failure to include a copy of the marked-up specification sections, along with justification(s) for any requested deviations to the

specification requirements, with the submittal shall be sufficient cause for rejection of the entire submittal with no further consideration.

F. Submit to the Construction Manager as provided in the General Conditions for shop drawings, detailed information on materials proposed and installation methods.

G. Product Data: Manufacturer's technical data for each joint sealer product required, including instructions for joint preparation and joint sealer application.

H. Samples for Color Selection: Manufacturer's standard bead samples consisting of strips of actual products showing full range of colors available, for each product exposed to view.

I. Samples for Color Verification: Samples of each type and color of joint sealer required. Install joint sealer samples in 1/2 inch wide joints formed between two 6 inch long strips of material matching the appearance of exposed surfaces adjacent to joint sealers in the Work.

1.4 QUALITY ASSURANCE

A. Applicable standards: Standards of the following, as referenced herein:
   1. ASTM C 920-87 Standard Specification for Elastomeric Joint Sealants.
   2. ASTM C 962-86 Standard Guide for Use of Elastomeric Joint Sealants.

B. Preinstallation Meeting: The contractor shall arrange a meeting with installer, sealer manufacturers' representatives, and other trades whose work affects installation of sealers at project site to review procedures and time schedule proposed for installation of sealers which is coordinated with other related work.

1.5 WARRANTY

A. Provide a warranty against defective equipment and workmanship in accordance with the requirements of the General Conditions of the Contract Documents.

1.6 DELIVERY, STORAGE, AND HANDLING

A. Deliver materials to project site in original unopened containers or bundles with labels showing manufacturer, product name and designation, color, expiration period for use, pot life, curing time, and mixing instructions for multi-component materials.

B. Store and handle materials to prevent their deterioration or damage due to moisture, temperature changes, contaminants, or other causes.

1.7 PROJECT CONDITIONS

A. Environmental Conditions: Do not proceed with installation of sealers under the following conditions:
   1. When ambient and substrate temperature conditions are outside the limits permitted by sealer manufacturer or below 40 degrees F (4.4 degrees C).
   2. When substrates are wet due to rain, frost, condensation, or other causes.

B. Joint Dimension Conditions: Do not proceed with installation of sealers

when joint dimensions are less than recommended by joint sealer manufacturer for application indicated.

PART 2 - PRODUCTS

2.1 CAULKING

A. Caulking Compound: One component, synthetic rubber base sealant, soft curing, nonstaining, conforming to F.S. TT-S-00230 and Thiokol's Building Trade Performance Specifications for Type 1 Class B sealants. Colors shall be selected by the Architect.

B. Primer: As recommended by caulking compound manufacturer.

C. Back-up Material: Closed cell foam polyethylene, or similar non-bituminous material as recommended by manufacturer of caulking compound and completely compatible with selected compound.

PART 3 - EXECUTION

3.1 SURFACE PREPARATION AND INSTALLATION

A. Remove dirt, grease, mortar droppings and other foreign matter from substrate.

B. Require installer to inspect joints indicated to receive joint sealers for compliance with requirements for joint configuration, installation tolerances and other conditions affecting joint sealer performance. Do not allow joint sealer work to proceed until unsatisfactory conditions have been corrected.

3.2 CAULKING

A. Surface Preparation: Clean metal surfaces free of grease, oil, wax lacquer, and other foreign residue by wiping with a clean cloth moistened with a suitable solvent. Scrape or brush masonry surfaces clean. Apply appropriate primer to contact surfaces.

B. Joint Preparation: Joints to be caulked having a depth in excess of 3/8-inch shall be packed with back-up material. Round back-up material shall be sized to require 20 percent to 50 percent compression upon insertion. In joints not of sufficient depth to allow packing, install polyethylene bond-breaking tape at back of joint. Avoid lengthwise stretching of back-up material. Cut all corners, avoid wrapping around corners.

C. Application: Apply compound with pressure flow gun with nozzle of proper size and shape to suit width of joint, promptly after mixing and with sufficient pressure to fill joint. Apply as a continuous operation horizontally in one direction, and vertically from bottom to top, except joints having excessive widths where compound might sag, the joints shall be built up with successive beads. Finish joints smooth and slightly coved.

3.3 PROTECTION AND CLEANING

A. Protect joint sealers during and after curing period from contact with contaminating substances or from damage resulting from construction operations or other causes so that they are without deterioration or damage at time of substantial completion. If, despite such protection, damage or deterioration occurs, cut out and remove damaged or

deteriorated joint sealers immediately and reseal joints with new materials to produce joint sealer installations with repaired areas indistinguishable from original work.

B. Protect weep holes on window frames from being sealed over.
C. Clean off excess sealants or sealant smears adjacent to joints as work progresses by methods and with cleaning materials approved by manufacturers of joint sealers and of products in which joints occur.

END OF SECTION 07900

SECTION 08110

STEEL DOORS AND FRAMES

GENERAL

RELATED DOCUMENTS

Drawings and general provisions of the Contract, including General and Supplementary Conditions and Division 1 Specification Sections, apply to this Section.

SUMMARY

Section Includes:

Ballistic steel door and frame.
Standard Hollow metal door and frame.

Related Sections

Division 8 Section 08710 for door hardware for doors.
Division 9 Sections 09912 for field painting hollow metal doors and frames.

DEFINITIONS

Minimum Thickness: Minimum thickness of base metal without coatings.
Standard Hollow Metal Work: Hollow metal work fabricated according to ANSI/SDI A250.8.

SUBMITTALs

A. The following information shall be provided.

1. A copy of this specification section, with addendum updates included, and all referenced and applicable sections, with addendum updates included, with each paragraph check-marked to indicate specification compliance or marked to indicate requested deviations from specification requirements. Check marks (✓) shall denote full compliance with a paragraph as a whole. If deviations from the specifications are indicated, and therefore requested by the Contractor, each deviation shall be underlined and denoted by a number in the margin to the right of the identified paragraph, referenced to a detailed written explanation of the reasons for requesting the deviation. The Construction Manager shall be the final authority for determining acceptability of requested deviations. The remaining portions of the paragraph not underlined shall signify compliance on the part of the Contractor with the specifications. Failure to include a copy of the marked-up specification sections, along with justification(s) for any requested deviations to the specification requirements, with the submittal shall be sufficient cause for rejection of the entire submittal with no further consideration.

B Product Data: For each type of product indicated. Include construction details, material descriptions, core descriptions, fire-resistance rating and finishes.

C. Shop Drawings: Include the following:
Elevations of each door design.
Details of doors, including vertical and horizontal edge details and metal thicknesses.
Frame details for each frame type, including dimensioned profiles and metal thicknesses.
Locations of reinforcement and preparations for hardware.
Details of each different wall opening condition.
Details of anchorages, joints, field splices, and connections.
Details of accessories.
Details of moldings, removable stops, and glazing.
Details of conduit and preparations for power, signal, and control systems.

Samples for Initial Selection: For units with factory-applied color finishes.
Samples for Verification:
For each type of exposed finish required, prepared on Samples of not less than 3 by 5 inches.
Other Action Submittals:
Schedule: Provide a schedule of hollow metal work prepared by or under the supervision of supplier, using same reference numbers for details and openings as those on Drawings. Coordinate with door hardware schedule.
Product Test Reports: Based on evaluation of comprehensive tests performed by a qualified testing agency, for each type of hollow metal door and frame assembly.

QUALITY ASSURANCE

Source Limitations: Obtain hollow metal work from single source from single manufacturer.
Fire-Rated Door Assemblies: Assemblies complying with NFPA 80 that are listed and labeled by a qualified testing agency, for fire-protection ratings indicated, based on testing at as close to neutral pressure as possible according to NFPA 252.
Smoke-Control Door Assemblies: Comply with NFPA 105.
Preinstallation Conference: Conduct conference at Project site.

DELIVERY, STORAGE, AND HANDLING

Deliver hollow metal work palletized, wrapped, or crated to provide protection during transit and Project-site storage. Do not use nonvented plastic.
Provide additional protection to prevent damage to finish of factory-finished units.
Deliver welded frames with two removable spreader bars across bottom of frames, tack welded to jambs and mullions.
Store hollow metal work under cover at Project site. Place in stacks of five units maximum in a vertical position with heads up, spaced by

blocking, on minimum 4-inch- high wood blocking. Do not store in a manner that traps excess humidity.
Provide minimum 1/4-inch space between each stacked door to permit air circulation.

PROJECT CONDITIONS

Field Measurements: Verify actual dimensions of openings by field measurements before fabrication.

COORDINATION

Coordinate installation of anchorages for hollow metal frames. Furnish setting drawings, templates, and directions for installing anchorages, including sleeves, concrete inserts, anchor bolts, and items with integral anchors. Deliver such items to Project site in time for installation.

PRODUCTS

MANUFACTURERS

Manufacturers: Subject to compliance with requirements, available manufacturers offering products that may be incorporated into the Work include, but are not limited to, the following:
Amweld Building Products, LLC.
Benchmark; a division of Therma-Tru Corporation.
Ceco Door Products; an Assa Abloy Group company.
Curries Company; an Assa Abloy Group company.
Deansteel Manufacturing Company, Inc.
Firedoor Corporation.
Fleming Door Products Ltd.; an Assa Abloy Group company.
Habersham Metal Products Company.
Ballistic Metal Doors Only
North American Ballistic Proof.
Pinnacle Armor
Overly Door Co.

STANDARD HOLLOW METAL FRAMES

General: Comply with ANSI/SDI A250.8 and with details indicated for type and profile.
Interior Frames: Fabricated from cold-rolled steel sheet.
Fabricate frames as face welded unless otherwise indicated.
Frames for Wood Doors: 0.053-inch thick steel sheet.
Hardware Reinforcement: Fabricate according to ANSI/SDI A250.6 with reinforcement plates from same material as frames.

FRAME ANCHORS

Jamb Anchors:
Stud-Wall Type: Designed to engage stud, welded to back of frames; not less than 0.042 inch thick.

Compression Type for Drywall Slip-on Frames: Adjustable compression anchors.
Postinstalled Expansion Type for In-Place Concrete or Masonry: Minimum 3/8-inch- diameter bolts with expansion shields or inserts. Provide pipe spacer from frame to wall, with throat reinforcement plate, welded to frame at each anchor location.
Floor Anchors: Formed from same material as frames, not less than 0.042 inch thick, and as follows:
Monolithic Concrete Slabs: Clip-type anchors, with two holes to receive fasteners.
Separate Topping Concrete Slabs: Adjustable-type anchors with extension clips, allowing not less than 2-inch height adjustment. Terminate bottom of frames at finish floor surface.

BALLISTIC DOORS AND FRAMES
Ballistic Interior Frames: Fabricated from 12 gauge cold-rolled prime finished steel sheet.
2" x 8-1/2" Bolt-in, wrap frame, bullet resistant UL Level 3
Bullet resistant armor plate insert on threat side of door.
Jamb Anchor:
Postinstalled Expansion Type for In-Place Concrete or Masonry: Minimum 3/8-inch- diameter bolts with expansion shields or inserts. Provide pipe spacer from frame to wall, with 12 gauge throat reinforcement plate, welded to frame at each side of four anchor locations.
Floor Anchors: Formed from same material as frames, not less than 012 gauge, and as follows:
Monolithic Concrete Slabs: Clip-type anchors, with two holes to receive fasteners.
Ballistic Doors: Bullet resistant, prime finished UL Level 3, flush steel

FABRICATION
Fabricate hollow metal work to be rigid and free of defects, warp, or buckle. Accurately form metal to required sizes and profiles, with minimum radius for thickness of metal. Where practical, fit and assemble units in manufacturer's plant. To ensure proper assembly at Project site, clearly identify work that cannot be permanently factory assembled before shipment.
Tolerances: Fabricate hollow metal work to tolerances indicated in SDI 117.
Hollow Metal Frames:
Welded Frames: Weld flush face joints continuously; grind, fill, dress, and make smooth, flush, and invisible.
Transom Bar Frames: Provide closed tubular members with no visible face seams or joints, fabricated from same material as door frame. Fasten members at crossings and to jambs by butt welding.
Provide countersunk, flat- or oval-head exposed screws and bolts for exposed fasteners unless otherwise indicated.
Grout Guards: Weld guards to frame at back of hardware mortises in frames to be grouted.

Floor Anchors: Weld anchors to bottom of jambs and mullions with at least four spot welds per anchor.
Jamb Anchors: Provide number and spacing of anchors as follows:
Masonry Type: Locate anchors not more than 6 inches from top and bottom of frame. Space anchors not more than 24 inches o.c. and as follows:
Four anchors per jamb up to 84 inches high.
Door Silencers: Drill stops to receive door silencers as follows. Keep holes clear during construction.
Single-Door Frames: Drill stop in strike jamb to receive three door silencers.
Fabricate concealed stiffeners, edge channels, and hardware reinforcement from either cold- or hot-rolled steel sheet.
Hardware Preparation: Factory prepare hollow metal work to receive templated mortised hardware; include cutouts, reinforcement, mortising, drilling, and tapping according to the Door Hardware Schedule and templates furnished as specified in Division 8 Section "Door Hardware."
Locate hardware as indicated.
Reinforce doors and frames to receive nontemplated, mortised and surface-mounted door hardware.
Coordinate locations of conduit and wiring boxes for electrical connections with Division 16 Sections.

STEEL FINISHES.
Prime Finish: Apply manufacturer's standard primer immediately after cleaning and pretreating.
Shop Primer: Manufacturer's standard, fast-curing, lead- and chromate-free primer complying with ANSI/SDI A250.10 acceptance criteria; recommended by primer manufacturer for substrate; compatible with substrate and field-applied coatings despite prolonged exposure.

EXECUTION

EXAMINATION
Examine substrates, areas, and conditions, with Installer present, for compliance with requirements for installation tolerances and other conditions affecting performance of the Work.
Examine roughing-in for embedded and built-in anchors to verify actual locations before frame installation.
Proceed with installation only after unsatisfactory conditions have been corrected.

PREPARATION
Remove welded-in shipping spreaders installed at factory. Restore exposed finish by grinding, filling, and dressing, as required to make repaired area smooth, flush, and invisible on exposed faces.

Prior to installation, adjust and securely brace welded hollow metal frames for squareness, alignment, twist, and plumbness to the following tolerances:

Squareness: Plus or minus 1/16 inch, measured at door rabbet on a line 90 degrees from jamb perpendicular to frame head.

Alignment: Plus or minus 1/16 inch, measured at jambs on a horizontal line parallel to plane of wall.

Twist: Plus or minus 1/16 inch, measured at opposite face corners of jambs on parallel lines, and perpendicular to plane of wall.

Plumbness: Plus or minus 1/16 inch, measured at jambs on a perpendicular line from head to floor.

Drill and tap doors and frames to receive nontemplated, mortised, and surface-mounted door hardware.

INSTALLATION

General: Install hollow metal work plumb, rigid, properly aligned, and securely fastened in place; comply with Drawings and manufacturer's written instructions.

Hollow Metal Frames: Install hollow metal frames of size and profile indicated, or comply with ANSI/SDI A250.11.

Set frames accurately in position, plumbed, aligned, and braced securely until permanent anchors are set. After wall construction is complete, remove temporary braces, leaving surfaces smooth and undamaged.

At fire-protection-rated openings, install frames according to NFPA 80.

Where frames are fabricated in sections because of shipping or handling limitations, field splice at approved locations by welding face joint continuously; grind, fill, dress, and make splice smooth, flush, and invisible on exposed faces.

Install door silencers in frames before grouting.

Remove temporary braces necessary for installation only after frames have been properly set and secured.

Check plumbness, squareness, and twist of frames as walls are constructed. Shim as necessary to comply with installation tolerances.

Floor Anchors: Provide floor anchors for each jamb and mullion that extends to floor, and secure with postinstalled expansion anchors.

Floor anchors may be set with powder-actuated fasteners instead of postinstalled expansion anchors if so indicated and approved on Shop Drawings.

Metal-Stud Partitions: Solidly pack mineral-fiber insulation behind frames.

Masonry Walls: Coordinate installation of frames to allow for solidly filling space between frames and masonry with grout.

In-Place Gypsum Board Partitions: Secure frames in place with postinstalled expansion anchors through floor anchors at each jamb. Countersink anchors, and fill and make smooth, flush, and invisible on exposed faces.

Ceiling Struts: Extend struts vertically from top of frame at each jamb to overhead structural supports or substrates above frame unless frame is anchored to masonry or to other structural support at each jamb. Bend top of struts to provide flush contact for securing to supporting construction. Provide adjustable wedged or bolted anchorage to frame jamb members.

Installation Tolerances: Adjust hollow metal door frames for squareness, alignment, twist, and plumb to the following tolerances:

Squareness: Plus or minus 1/16 inch, measured at door rabbet on a line 90 degrees from jamb perpendicular to frame head.

Alignment: Plus or minus 1/16 inch, measured at jambs on a horizontal line parallel to plane of wall.

Twist: Plus or minus 1/16 inch, measured at opposite face corners of jambs on parallel lines, and perpendicular to plane of wall.

Plumbness: Plus or minus 1/16 inch, measured at jambs at floor.

Ballistic Metal Doors: Fit metal doors accurately in frames, within clearances specified below. Shim as necessary.

Fire-Rated Doors: Install doors with clearances according to NFPA 80.

Smoke-Control Doors: Install doors according to NFPA 105.

ADJUSTING AND CLEANING

Final Adjustments: Check and readjust operating hardware items immediately before final inspection. Leave work in complete and proper operating condition. Remove and replace defective work, including hollow metal work that is warped, bowed, or otherwise unacceptable.

Remove grout and other bonding material from hollow metal work immediately after installation.

Prime-Coat Touchup: Immediately after erection, sand smooth rusted or damaged areas of prime coat and apply touchup of compatible air-drying, rust-inhibitive primer.

END OF SECTION 08110

SECTION 08219

FLUSH WOOD DOORS

GENERAL

RELATED DOCUMENTS

Drawings and general provisions of the Contract, including General and Supplementary Conditions and Division 1 Specification Sections, apply to this Section.

SUMMARY

Section Includes:

Solid-core doors with wood-veneer faces.

Factory fitting flush wood doors to frames and factory machining for hardware.

Related Sections:

Division 9 Section 09912 for field finishing doors.

SUBMITTALS

A. The following information shall be provided.

1. A copy of this specification section, with addendum updates included, and all referenced and applicable sections, with addendum updates included, with each paragraph check-marked to indicate specification compliance or marked to indicate requested deviations from specification requirements. Check marks (✓) shall denote full compliance with a paragraph as a whole. If deviations from the specifications are indicated, and therefore requested by the Contractor, each deviation shall be underlined and denoted by a number in the margin to the right of the identified paragraph, referenced to a detailed written explanation of the reasons for requesting the deviation. The Construction Manager shall be the final authority for determining acceptability of requested deviations. The remaining portions of the paragraph not underlined shall signify compliance on the part of the Contractor with the specifications. Failure to include a copy of the marked-up specification sections, along with justification(s) for any requested deviations to the specification requirements, with the submittal shall be sufficient cause for rejection of the entire submittal with no further consideration.

B. Product Data: For each type of door indicated. Include details of core and edge construction and trim for openings.

C. Shop Drawings: Indicate location, size, and hand of each door; elevation of each kind of door; construction details not covered in Product Data; location and extent of hardware blocking; and other pertinent data.

Indicate dimensions and locations of mortises and holes for hardware.

Indicate dimensions and locations of cutouts.

Indicate requirements for veneer matching.

Indicate doors to be factory finished and finish requirements.

D. Samples for Verification:

Corner sections of doors, approximately 8 by 10 inches, with door faces and edges representing actual materials to be used.

a. Provide samples for each species of veneer and solid lumber required.
b. Finish veneer-faced door samples with same materials proposed for factory-finished doors.

Warranty: Sample of special warranty.

QUALITY ASSURANCE

Source Limitations: Obtain flush wood doors from single manufacturer.

Quality Standard: In addition to requirements specified, comply with WDMA I.S.1-A, "Architectural Wood Flush Doors."

DELIVERY, STORAGE, AND HANDLING

Comply with requirements of referenced standard and manufacturer's written instructions.

Package doors individually in plastic bags or cardboard cartons.

Mark each door on top and bottom rail with opening number used on Shop Drawings.

PROJECT CONDITIONS

Environmental Limitations: Do not deliver or install doors until spaces are enclosed and weathertight, wet work in spaces is complete and dry, and HVAC system is operating and maintaining temperature between 60 and 90 deg F and relative humidity between 25 and 55 percent during the remainder of the construction period.

WARRANTY

Special Warranty: Manufacturer's standard form in which manufacturer agrees to repair or replace doors that fail in materials or workmanship within specified warranty period.

Failures include, but are not limited to, the following:

c. Warping (bow, cup, or twist) more than 1/4 inch in a 42-by-84-inch section.
d. Telegraphing of core construction in face veneers exceeding 0.01 inch in a 3-inch span.

Warranty shall also include installation and finishing that may be required due to repair or replacement of defective doors.

Warranty Period for Solid-Core Interior Doors: Life of installation.

PRODUCTS

MANUFACTURERS

Manufacturers: Subject to compliance with requirements, manufacturers offering products that may be incorporated into the Work include, but are not limited to, the following:

Algoma Hardwoods, Inc.
Ampco, Inc.
Buell Door Company Inc.
Chappell Door Co.
Eagle Plywood & Door Manufacturing, Inc.
Eggers Industries.
Graham; an Assa Abloy Group company.

Haley Brothers, Inc.
Ideal Architectural Doors & Plywood.
Ipik Door Company.
Lambton Doors.
Marlite.
Marshfield Door Systems, Inc.
Mohawk Flush Doors, Inc.; a Masonite company.
Oshkosh Architectural Door Company.
Poncraft Door Company.
Vancouver Door Company.
VT Industries Inc.

DOOR CONSTRUCTION, GENERAL

Low-Emitting Materials: Provide doors made with adhesives and composite wood products that do not contain urea formaldehyde.

WDMA I.S.1-A Performance Grade: Heavy Duty.

Heavy Duty unless otherwise indicated.

VENEERED-FACED DOORS FOR TRANSPARENT FINISH

Interior Solid-Core Doors:

Grade: Custom Grade A faces.

Species: Select white birch.

Cut: Rotary cut.

Match between Veneer Leaves: Pleasing match.

Assembly of Veneer Leaves on Door Faces: Center-balance match.

Existing Door Match: Provide door faces of compatible color and grain within adjacent area of building.

Exposed Vertical and Top Edges: Applied wood edges of same species as faces and covering edges of crossbands.

Core: Glued wood stave.

Construction: Five plies. Stiles and rails are bonded to core, then entire unit abrasive planed before veneering. Faces are bonded to core using a hot press.

WDMA I.S.1-A Performance Grade: Heavy Duty.

FABRICATION

Factory fit doors to suit frame-opening sizes indicated. Comply with clearance requirements of referenced quality standard for fitting unless otherwise indicated..

Factory machine doors for hardware that is not surface applied. Locate hardware to comply with DHI-WDHS-3. Comply with final hardware schedules, door frame Shop Drawings, DHI A115-W series standards, and hardware templates.

Coordinate with hardware mortises in metal frames to verify dimensions and alignment before factory machining.

Openings: Cut and trim openings through doors in factory.

Observation Port Opening: Trim opening with moldings of material and profile indicated.

SHOP PRIMING

Doors for Transparent Finish: Shop prime doors with stain (if required), other required pretreatments, and first coat of finish as specified in Division 9 Section

09931. Seal all four edges, edges of cutouts, and mortises with first coat of finish.

EXECUTION

EXAMINATION

Examine doors and installed door frames before hanging doors.

Verify that frames comply with indicated requirements for type, size, location, and swing characteristics and have been installed with level heads and plumb jambs.

Reject doors with defects.

Proceed with installation only after unsatisfactory conditions have been corrected.

INSTALLATION

Hardware: For installation, see Division 8 Section "Door Hardware."

Installation Instructions: Install doors to comply with manufacturer's written instructions and the referenced quality standard, and as indicated.

Job-Fitted Doors: Align and fit doors in frames with uniform clearances and bevels as indicated below; do not trim stiles and rails in excess of limits set by manufacturer or permitted for fire-rated doors. Machine doors for hardware. Seal edges of doors, edges of cutouts, and mortises after fitting and machining.

Clearances: Provide 1/8 inch at heads, jambs, and between pairs of doors. Provide 1/8 inch from bottom of door to top of decorative floor finish or covering unless otherwise indicated.

Bevel non-fire-rated doors 1/8 inch in 2 inches at lock and hinge edges.

Factory-Finished Doors: Restore finish before installation if fitting or machining is required at Project site.

ADJUSTING

Operation: Rehang or replace doors that do not swing or operate freely.

Finished Doors: Replace doors that are damaged or that do not comply with requirements. Doors may be repaired or refinished if work complies with requirements and shows no evidence of repair or refinishing.

END OF SECTION 08211

SECTION 08311

ACCESS DOORS AND FRAMES

GENERAL

RELATED DOCUMENTS

Drawings and general provisions of the Contract, including General and Supplementary Conditions and Division 1 Specification Sections, apply to this Section.

SUMMARY

This Section includes the following:

Access doors and frames for walls.

Product Data: For each type of access door and frame indicated. Include construction details, materials, individual components and profiles, and finishes.

Shop Drawings: Show fabrication and installation details of access doors and frames for each type of substrate. Include plans, elevations, sections, details, and attachments to other work.

Access Door and Frame Schedule: Provide complete access door and frame schedule, including types, locations, sizes, latching or locking provisions, and other data pertinent to installation.

SUBMITTALS

The following information shall be provided.

A copy of this specification section, with addendum updates included, and all referenced and applicable sections, with addendum updates included, with each paragraph check-marked to indicate specification compliance or marked to indicate requested deviations from specification requirements. Check marks (✓) shall denote full compliance with a paragraph as a whole. If deviations from the specifications are indicated, and therefore requested by the Contractor, each deviation shall be underlined and denoted by a number in the margin to the right of the identified paragraph, referenced to a detailed written explanation of the reasons for requesting the deviation. The Construction Manager shall be the final authority for determining acceptability of requested deviations. The remaining portions of the paragraph not underlined shall signify compliance on the part of the Contractor with the specifications. Failure to include a copy of the marked-up specification sections, along with justification(s) for any requested deviations to the specification requirements, with the submittal shall be sufficient cause for rejection of the entire submittal with no further consideration.

QUALITY ASSURANCE

Source Limitations: Obtain each type of access door(s) and frame(s) through one source from a single manufacturer. Retain one or both subparagraphs below with paragraph above. Verify test method recognized by authorities having jurisdiction and availability of complying products with manufacturers selected.

Size Variations: Obtain Architect's acceptance of manufacturer's standard-size units, which may vary slightly from sizes indicated.

COORDINATION

Verification: Determine specific locations and sizes for access door needed to gain access to concealed work indicated on drawings.

PRODUCTS

STEEL MATERIALS

Steel Plates, Shapes, and Bars: ASTM A 36/A 36M.

Steel Sheet: Electrolytic zinc-coated, ASTM A 591/A 591M with cold-rolled steel sheet substrate complying with ASTM A 1008/A 1008M, Commercial Steel (CS), exposed.

Steel Finishes: Comply with NAAMM's "Metal Finishes Manual for Architectural and Metal Products" for recommendations for applying and designating finishes.

Surface Preparation for Steel Sheet: Clean surfaces to comply with SSPC-SP 1, "Solvent Cleaning," to remove dirt, oil, grease, or other contaminants that could impair paint bond. Remove mill scale and rust, if present, from uncoated steel, complying with SSPC-SP 5/NACE No. 1, "White Metal Blast Cleaning," or SSPC-SP 8, "Pickling."

Factory-Primed Finish: Apply shop primer immediately after cleaning and pretreating.

ACCESS DOORS AND FRAMES FOR WALLS AND CEILINGS

Available Manufacturers: Subject to compliance with requirements, manufacturers offering products that may be incorporated into the Work include, but are not limited to, the following:

Manufacturers: Subject to compliance with requirements, provide products by one of the following:

Acudor Products, Inc.
Babcock-Davis; A Cierra Products Co.
Bar-Co, Inc. Div.; Alfab, Inc.
Cendrex Inc.
Dur-Red Products.
Elmdor/Stoneman; Div. of Acorn Engineering Co.
Jensen Industries.
J. L. Industries, Inc.
Karp Associates, Inc.
Larsen's Manufacturing Company.

MIFAB, Inc.
Milcor Inc.
Nystrom, Inc.
Williams Bros. Corporation of America (The).

Flush Access Doors and Frames with Exposed Trim: Fabricated from steel sheet.
Locations: Wall surface in Pat-Down Room.
Door: Minimum 0.060-inch thick sheet metal, set flush with exposed face flange of frame.
Frame: Minimum 0.060-inch thick sheet metal with 1-1/4-inch wide, surface-mounted trim.
Hinges: Continuous piano.
Latch: Cam latch operated by screwdriver with interior release.

FABRICATION

General: Provide access door and frame assemblies manufactured as integral units ready for installation.
Metal Surfaces: For metal surfaces exposed to view in the completed Work, provide materials with smooth, flat surfaces without blemishes. Do not use materials with exposed pitting, seam marks, roller marks, rolled trade names, or roughness.
Doors and Frames: Grind exposed welds smooth and flush with adjacent surfaces. Furnish attachment devices and fasteners of type required to secure access panels to types of supports indicated.
Exposed Flanges: Nominal 1 to 1-1/2 inches wide around perimeter of frame.
Provide mounting holes in frame for attachment of masonry anchors. Furnish adjustable metal masonry anchors.
Latching Mechanisms: Furnish number required to hold doors in flush, smooth plane when closed.

EXECUTION

INSTALLATION

Comply with manufacturer's written instructions for installing access doors and frames.
Set frames accurately in position and attach securely to supports with plane of face panels aligned with adjacent finish surfaces.
Install doors flush with adjacent finish surfaces or recessed to receive finish material.

ADJUSTING AND CLEANING

Adjust doors and hardware after installation for proper operation.
Remove and replace doors and frames that are warped, bowed, or otherwise damaged

END OF SECTION 08311

SECTION 08410

STOREFRONT FRAME

PART 1 GENERAL

1.1. DESCRIPTION OF WORK: Furnish entrances and storefronts, complete. Supplying of fastenings, connections to building structure and other items not mentioned specifically herein, but which are necessary to make a complete installation shall be included.

1.2. GENERAL:

A. Structural Performance: Provide systems, including anchorage, capable of withstanding loads indicated.
   1. Main-Framing-Member Deflection: Limited to 1/175 of clear span or 3/4 inch (19 mm) whichever is smaller.
   2. Structural-Testing: Systems tested according to ASTM E 330 at 150 percent of inward and outward wind-load design pressures do not evidence material failures, structural distress, deflection failures, or permanent deformation of main framing members exceeding 0.2 percent of clear span.

B. Air Infiltration: Limited to 0.06 cfm/sq. ft. (0.3 L/s per sq. m) of system surface area when tested according to ASTM E 283.

C. Water Penetration: Systems do not evidence water leakage when tested according to ASTM E 331 at minimum differential pressure of 20 percent of inward acting wind load design pressure but not less than 6.24 psf.

D. Average U-Value: Not more than .65Btu/hr/sf/degree F per AAMA 1503.1.

E. Submittals: Product Data, Shop Drawings, and color Samples.
   1. For entrance systems, include hardware schedule and locations.

1.3 SUBMITTALS

A. The following information shall be provided.
   1. A copy of this specification section, with addendum updates included, and all referenced and applicable sections, with addendum updates included, with each paragraph check-marked to indicate specification compliance or marked to indicate requested deviations from specification requirements. Check marks (✓) shall denote full compliance with a paragraph as a whole. If deviations from the specifications are indicated, and therefore requested by the Contractor, each deviation shall be underlined and denoted by a number in the margin to the right of the identified paragraph, referenced to a detailed written explanation of the reasons for requesting the deviation. The Construction Manager shall be the final authority for determining acceptability of requested deviations. The remaining portions of the paragraph not underlined shall signify compliance on the part of the Contractor with the specifications. Failure to include a copy of the marked-up specification sections, along with justification(s) for any requested deviations to the specification requirements, with the submittal shall be sufficient

cause for rejection of the entire submittal with no further consideration.

PART 2 PRODUCTS

2.1 Aluminum Framed Storefronts
A. Aluminum storefront system doors and frames as manufactured by YKK, Kawner or Vista Wall are acceptable or products of equal quality, performance and appearance.

2.2 Aluminum: ASTM B 209 (ASTM B 209M) sheet; ASTM B 221 (ASTM B 221M) extrusions.

2.3 Glazing: Specified in Division 8 Section "Glazing."

2.4 Sealants and Joint Fillers: For joints at perimeter of systems as specified in Division 7 Section "Joint Sealants."

2.5 Doors: 1-3/4-inch- (44.5-mm-) thick glazed doors with minimum 0.125-inch- (3.2-mm-) thick, extruded tubular rail and stile members, mechanically fastened corners with reinforcing brackets that are deep penetration and fillet welded or that incorporate concealed tie-rods, snap-on extruded-aluminum glazing stops, and preformed gaskets. Medium style doors shall be provided.
A. Interior Doors: Provide ANSI/BHMA A156.16 silencers, three on strike jamb of single-door frames and two on head of double-door frames.
B. Exterior Doors: Provide compression weather stripping at fixed stops. At other locations, provide sliding weather stripping retained in adjustable strip mortised into door edge.
C. Hardware: As specified in Division 8 Section "Door Hardware."

2.6 Fasteners and Accessories: Compatible with adjacent materials, corrosion-resistant, non-staining, and non-bleeding. Use concealed fasteners except for application of door hardware.

2.7 Fabrication: The framing system shall provide for flush glazing on all sides with no projecting stops. Vertical and horizontal framing members shall have a nominal face dimension of 2". Overall depth shall be as indicated on drawings. Fabricate framing in profiles indicated for flush glazing (without projecting stops). Provide subframes and reinforcing of types indicated or, if not indicated, as required for a complete system. Use factory assemble components to greatest extent possible. Disassemble components only as necessary for shipment and installation.

2.8 Door Framing: Reinforce to support imposed loads. Factory assemble door and frame units and factory install hardware to greatest extent possible. Reinforce door and frame units for hardware indicated. Cut, drill, and tap for factory-installed hardware before finishing components.

2.9 Aluminum Finish: Comply with NAAMM's "Metal Finishes Manual for Architectural and Metal Products. "Clear anodic, Architectural Class I: AA-

M12C22A41 or if color is required to match existing then Color anodic, Architectural Class I: AA-M12C22A42/A44

A. Color: To match existing store fronts.

PART 3 EXECUTION

3.1 INSTALLATION

A. Isolate metal surfaces in contact with incompatible metal or corrosive substrates, including wood, by painting contact surfaces with bituminous coating or primer, or by applying sealant or tape recommended by manufacturer.

B. Install components to provide a weatherproof system.

C. Install framing components true in alignment with established lines and grades to the following tolerances:

1. Variation from Plane: Limit to 1/8 inch in 12 feet (3 mm in 3.7 m); 1/4 inch (6 mm) over total length.
2. Alignment: For surfaces abutting in line, limit offset to 1/16 inch (1.5 mm). For surfaces meeting at corners, limit offset to 1/32 inch (0.8 mm).
3. Diagonal Measurements: Limit difference between diagonal measurements to 1/8 inch (3 mm).
4. Install doors without warp or rack. Adjust doors and hardware to provide tight fit at contact points and smooth operation.

END OF SECTION 08410

SECTION 08470

REVOLVING ENTRANCE DOORS

PART 1 GENERAL

1.1 Description of Work

A. This specification covers the furnishing and installation of material for revolving entrance doors. Products shall be as follows or as directed by the Owner. Installation procedures shall be in accordance with the products manufacturer's recommendations.

1.2 Summary

A. Section Includes:
   1. Manual revolving door entrances.
   2. Access-controlled manual revolving door entrances.

1.3 Submittals

A. The following information shall be provided.
   1. A copy of this specification section, with addendum updates included, and all referenced and applicable sections, with addendum updates included, with each paragraph check-marked to indicate specification compliance or marked to indicate requested deviations from specification requirements. Check marks (✓) shall denote full compliance with a paragraph as a whole. If deviations from the specifications are indicated, and therefore requested by the Contractor, each deviation shall be underlined and denoted by a number in the margin to the right of the identified paragraph, referenced to a detailed written explanation of the reasons for requesting the deviation. The Construction Manager shall be the final authority for determining acceptability of requested deviations. The remaining portions of the paragraph not underlined shall signify compliance on the part of the Contractor with the specifications. Failure to include a copy of the marked-up specification sections, along with justification(s) for any requested deviations to the specification requirements, with the submittal shall be sufficient cause for rejection of the entire submittal with no further consideration.

B. Product Data: For each type of product indicated. Include construction details, material descriptions, dimensions of individual components and profiles, and finishes for revolving door entrances.

C. Shop Drawings: For revolving door entrances. Include plans, elevations, sections, details, and attachments to other work. Indicate enclosures, speed-control units, and other components not in manufacturer's product data.
   1. Wiring Diagrams: Power, signal, and control wiring.

D. Samples:
   1. Finishes: For each type of exposed finish required, prepared on Samples of not less than 3 by 5 inches (76 by 127 mm).
   2. Glass Samples: For each type of tinted glass; 12 inches (300 mm) square.

E. Qualification Data: For qualified Installer, manufacturer and testing agency.

F. Product Test Reports: Based on evaluation of comprehensive tests performed by manufacturer and witnessed by a qualified testing agency, for revolving door entrances.
G. Operation and Maintenance Data: For revolving door entrances to include in operation and maintenance manuals.
H. Warranties: Samples of special warranties.

1.4 Quality Assurance
A. Installer Qualifications: Manufacturer's authorized representative who is trained and approved for installation of units required for this Project.
B. Regulatory Requirements: Wings shall be capable of collapsing into a book-fold position to provide minimum aggregate parallel width of 36 inches (914 mm) when breakaway force of no more than 130 lbf is applied within 3 inches (76 mm) of outer edges. Set maximum turning speed to comply with requirements of authorities having jurisdiction.
C. Safety Glass: Category II materials complying with testing requirements in 16 CFR 1201.
1. Safety-Glass Labeling: Where safety-glass labeling is indicated, permanently mark glass with certification label of the SGCC, another certification agency acceptable to authorities having jurisdiction, or the manufacturer. Label shall indicate manufacturer's name, type of glass, thickness, and safety-glass standard with which glass complies.
D. Revolving Door Entrance Standard: BHMA A156.27.
E. Pre-installation Conference: Conduct conference at Project site.

1.5 Delivery, Storage, and Handling
A. Deliver revolving door entrance glass, decorative metalwork, and other exposed elements in padded blankets or other approved protective wrapping.
B. Protect finish surfaces from damage during handling and installation.

1.6 Coordination
A. Recesses: Coordinate size and location of recesses in floor construction for recessed, floor mounted speed-control units, pivot bearings, foot grilles and recessed mats including anchorages for frames and supports. Furnish setting drawings, templates, and directions for installing anchorages that are to be embedded into concrete. Deliver these items to Project site in time for installation. Concrete, reinforcement, and formwork requirements are specified in Division 02.

1.7 Warranty
A. Special Warranty: Manufacturer's standard form in which manufacturer agrees to repair or replace components of revolving door entrances that fail in materials or workmanship within specified warranty period.
1. Failures include, but are not limited to, the following:
a) Lateral deflection of glass lite edges in excess of 1/175 of their length or 3/4 inch, whichever is less.
b) Excessive air leakage.
c) Faulty operation of speed-control unit and hardware.
d) Deterioration of metals, metal finishes, and other materials beyond normal weathering.

2. Warranty Period for Revolving Door Entrances: Three years from date of Substantial Completion.
3. Warranty Period for Speed-Control Units: Five years from date of Substantial Completion.
4. Warranty Period for Finishes: 20 years from date of Substantial Completion.

PART 2 PRODUCTS

2.1 Basis of Design

A. Besam RD4A-2-8

B. Subject to compliance with requirements, manufacturers offering products that conform to the following standards may be incorporated into the Work.

2.2 Revolving Door Entrances

A. Air Infiltration: Maximum air leakage of 1.25 cfm/sq. ft. (6.4 L/s x sq. m) of wing area when tested according to ASTM E 283 at a minimum static-air-pressure difference of 1.57 lbf/sq. ft. (75 Pa), equivalent to a 25-mph (40-km/h) wind.

B. Thermal Movements: Allow for thermal movements from ambient and surface temperature changes acting on glass framing members and glazing components.
   1. Temperature Change: 120 deg F ambient material surfaces.

C. Windborne-Debris-Impact Resistance: Provide exterior glazing that passes basic enhanced, protection testing requirements in ASTM E 1996 for Wind Zone 3, when tested using the large-missile test according to ASTM E 1886. Test specimens shall be no smaller in width and length than glazing indicated for use on the Project and shall be installed in same manner as glazing indicated for use on the Project.

D. Seismic Performance: Revolving door entrances shall withstand the effects of gravity loads and loads and stresses within limits and under conditions indicated according to ASCE/SEI 7.

2.3 Manual Revolving Door Entrances

A. Description: Provide manufacturer's standard four-wing, manual revolving door entrance, complete with center shaft, speed-control unit, wings, enclosure walls, canopy, hardware, glass and glazing, and accessories as indicated.
   1. Manual Speed-Control Unit: Mechanical speed regulator that allows free rotation of wings up to a predetermined rate of speed and that engages a clutch-type brake to prevent rapid acceleration of wings.
      a) Location: concealed, ceiling mounted.
      b) Fold-to-Side Mechanism: Manufacturer's standard overhead carriage, guide support track, pivot mechanism, and other components necessary to permit folded wings to be moved to one side of revolving door entrance enclosure.

2. Stile-and-Rail Wings: Manufacturer's standard with extruded aluminum stile and-rail members.
   a) Stile Design: As indicated on Drawings.
   b) Rail Design: As indicated on Drawings.
   c) Glass: Clear, laminated safety glass.
      1) Thickness: ¼ inch.
3. Push Bars: Manufacturer's standard push bars, finished to match wings.
   a) Shape: Round bars, 1 inch (25 mm) in diameter.
4. Locks: Manufacturer's standard deadbolt locks to receive cylinders; minimum of two for each revolving door entrance.
   a) Cylinders: Comply with requirements in Division 08 Section "Door Hardware".
   b) Mounting: Mortised.
   c) Location: Extend bolt from bottom of wing into floor.
5. Proved remote controlled "lock-out" function so doors can be locked to outside traffic.
6. Enclosure Walls: Manufacturer's standard, with extruded aluminum framing members.
   a) Configuration: Curved.
   b) Glass: Clear, laminated safety glass.
      1) Thickness: 7/16 inch
7. Canopy: Manufacturer's standard ceiling, fascia, roof, and framing with size, layout, materials, and exposed finishes matching enclosure walls unless otherwise indicated.
   a) Metal: Fabricate from minimum 0.125-inch-thick, aluminum sheet. Provide ceiling access panels for repairs to or maintenance of speed-control unit.
   b) Ceiling Lights: Manufacturer's standard, consisting of two recessed light fixtures within the ceiling of the revolving door entrance enclosure, complete with lamps and translucent lenses.
   c) Canopy Roof: Manufacturer's standard, of material and finish matching enclosure walls where visible.
   d. Floors: Stained concrete.
   e) Recessed Grilles: Provide grille at entry segment only. Match existing grill as specified in Division 12 and as indicated on Drawings.

B. Fabrication: Fabricate revolving door entrance components to designs, sizes, thicknesses, and configurations indicated with profiles that are sharp, straight, and free of defects or deformations. Accurately fit joints with ends coped or mitered to produce hairline joints free of burrs and distortion. Pre-fit all hardware at the factory. Provide anchorage and alignment brackets for concealed support of assembly from the building structure.
   1. Wings: Factory fabricated and assembled in profiles indicated. Reinforce as required to support imposed loads and for installing hardware.
      a) Glaze wings at the factory. Comply with glazing requirements specified in this Section and in Division 08 Section "Glazing". Provide minimum clearances for thickness and type of glass indicated according to GANA's "Glazing Manual."

b) Provide sliding weather stripping, mortised into stiles and rails of wings, to be adjustable and replaceable without dismantling wings.
c) Welded Construction: Weld reinforcement firmly in place. Weld corners. Grind and polish welds to produce an invisible joint. Mechanically finish exposed surfaces after fabrication to eliminate surface blemishes caused by welding, rolling, bending, and forming.

2. Enclosure Walls and Canopy: Fabricate extruded aluminum frame assemblies in configuration indicated, with welded or mechanical joints, according to manufacturer's standards and as specified. Provide sub-frames as required for a complete system to support required loads.
a) Exterior Framing: Fabricate components to drain water passing joints and condensation and moisture occurring or migrating within the system to the exterior. Provide anchorage and alignment brackets for concealed support of assembly from the building structure. Allow for thermal expansion of exterior units.

C. Aluminum Finishes: High performance, organic.
1. Color: As selected from manufacturer's full range as selected by the Architect.

2.4 General Finish Requirements
A. Comply with NAAMM's "Metal Finishes Manual for Architectural and Metal Products" for recommendations for applying and designating finishes.
B. Protect mechanical finishes on exposed surfaces from damage by applying a strippable, temporary protective covering before shipping.
C. Finish revolving door components to match adjacent curtain wall or storefront.

2.5 Aluminum Finishes, Door and Hardware
A. Clear Anodic Finish: AAMA 611, AA-M12C22A41, Class I, 0.018 mm or thicker.

2.6 Outer Drum Wall Finish.
A. High-Performance Organic Finish: Three-coat, fluoropolymer finish complying with AAMA 2605 and containing not less than 70 percent PVDF resin by weight in color coat. Prepare, pre-treat, and apply coating to exposed metal surfaces to comply with coating and resin manufacturers' written instructions.

PART 3 EXECUTION

3.1 Examination
A. Examine substrates and conditions, with Installer present, for compliance with requirements for installation tolerances and other conditions affecting performance of the Work.
B. Proceed with installation only after unsatisfactory conditions have been corrected.

3.2 Installation

A. General: Do not install damaged components. Fit frame joints to produce hairline joints free of burrs and distortion. Rigidly secure non-movement joints. Seal joints watertight.
   1. Where aluminum will contact dissimilar metals, protect against galvanic action by painting contact surfaces with primer or by applying sealant or tape recommended by manufacturer for this purpose.
   2. Where aluminum will contact concrete or masonry, protect against corrosion by painting contact surfaces with corrosion-resistant coatings.

B. Overhead-Mounted Speed-Control Unit: Insert pivot bearing in rough-in floor opening set on level bed of non-shrink, nonmetallic grout. Fill annular space between pivot bearing and sides of recess with non-shrink, nonmetallic grout. Mix and place grout to comply with grout manufacturer's written instructions.
   1. Connect speed-control unit to electrical power distribution system as specified in Division 15.

C. Install revolving door entrances according to manufacturer's written instructions, plumb and true, without warp or rack of framing members and wings. Anchor securely in place.
   1. Install surface-mounted hardware using concealed fasteners to greatest extent possible.
   2. Install components to drain water passing joints, condensation occurring within framing members, and moisture migrating within the assembly to exterior.
   3. Cut and trim framing during installation only with approval of manufacturer.
      a) Restore finish and remove and replace members, as directed, where cutting and trimming have impaired strength or appearance.
      b) Do not install members that are warped, bowed, deformed, or otherwise damaged or defaced to such an extent as to impair strength or appearance. Remove and replace members that have been damaged during installation.

D. Activation and Safety Devices: Adjust devices to provide detection field and functions indicated.

E. Sealants: Comply with requirements specified in Division 07 Section "Joint Sealants" to provide weather tight installation.
   1. Set continuous sill members and flashings in full sealant bed.
   2. Seal perimeter of framing members with sealant.

3.3 Adjusting

A. Adjust wings to provide an even, tight fit at contact points and weather stripping for smooth operation and weather tight closure. Adjust wings to operate smoothly and rotate evenly, with hardware and operators functioning properly.
   1. Lubricate operating hardware and other moving parts.
   2. Adjust speed-control unit for specified rpm.
   3. Adjust pressure for collapse of wings for specified breakaway force.

B. Readjust wings and speed-control units after repeated operation of completed installation equivalent to three days' use by normal traffic (100 to 300 cycles). Lubricate hardware and other moving parts.

3.4 Cleaning And Protection

A. Clean glass and aluminum surfaces promptly after installation. Remove excess glazing and sealant compounds, dirt, and other substances. Repair damaged finish to match original finish.
B. Limit construction traffic during remainder of construction period.

3.5 Demonstration

A. Train Owner's maintenance personnel to adjust, operate, and maintain revolving door entrances.

END OF SECTION 08470

SECTION 08510

STEEL WINDOWS

PART 1 – GENERAL

1.1 Description Of Work

A. This specification covers the furnishing and installation of material for steel windows. Products shall be as follows or as directed by the Owner. Installation procedures shall be in accordance with the products manufacturer's recommendations. Demolition and removal of materials shall be as required to support the work.

B. Summary

1. Section includes: Steel windows from cold-formed steel members.

1.2 Performance Requirements

1. Ballistic Performance: Provide steel windows capable of withstanding Level 3 ballistic requirements.

1.3. Submittals

The following information shall be provided.

A. A copy of this specification section, with addendum updates included, and all referenced and applicable sections, with addendum updates included, with each paragraph check-marked to indicate specification compliance or marked to indicate requested deviations from specification requirements. Check marks (✓) shall denote full compliance with a paragraph as a whole. If deviations from the specifications are indicated, and therefore requested by the Contractor, each deviation shall be underlined and denoted by a number in the margin to the right of the identified paragraph, referenced to a detailed written explanation of the reasons for requesting the deviation. The Construction Manager shall be the final authority for determining acceptability of requested deviations. The remaining portions of the paragraph not underlined shall signify compliance on the part of the Contractor with the specifications. Failure to include a copy of the marked-up specification sections, along with justification(s) for any requested deviations to the specification requirements, with the submittal shall be sufficient cause for rejection of the entire submittal with no further consideration.

B. Product Data: For each type of product indicated. Include construction details, material descriptions, fabrication methods, dimensions of individual components and profiles, hardware, finishes, and operating instructions.

C. Shop Drawings: Include plans, elevations, sections, details, hardware, attachments to other work, operational clearances, installation details, and the following:

a. Mullion details including reinforcement and stiffeners.
b. Joinery details.
c. Expansion provisions.

d. Glazing details.

1.4 Warranties: Manufacturer's standard form in which manufacturer agrees to repair or replace aluminum windows that fail in materials or workmanship within specified warranty period.

A. Failures include, but are not limited to, the following:
1. Failure to meet performance requirements.
2. Structural failures including excessive deflection.
3. Deterioration of metals, other materials, and metal finishes beyond normal.
4. Failure of ballistic glass.

B. Warranty Period:
1. Window: Three, years from date of Substantial Completion.
2. Glazing: Five years from date of Substantial Completion.
3. Metal Finish: Five 10 years from date of Substantial Completion.

1.5 Quality Assurance

A. Manufacturer Qualifications: A manufacturer capable of fabricating steel windows that meet or exceed performance requirements indicated and of documenting this performance by inclusion in lists, and by labels, test reports, and calculations.

B. Installer Qualifications: An installer acceptable to window manufacturer for installation of units required for this Project.

1.6 Pre-installation Conference: Conduct conference at Project site.

1.7 Project Conditions

A. Field Measurements: Verify actual dimensions of steel window openings by field measurements before fabrication.

PART 2 – PRODUCTS

2.1 Materials

A. Fasteners: Provide fasteners of steel, or other metal that are warranted by manufacturer to be noncorrosive and compatible with trim, hardware, anchors, and other components of steel windows.

B. Anchors, Clips, and Window Accessories: Provide units of stainless steel, hot-dip zinc-coated steel, bronze, brass, or iron complying with ASTM A 123/A 123M. Provide units with sufficient strength to withstand design requirements indicated.

C. Glazing Stops: Manufacturer's standard Formed steel

D. Sealant: For sealants required within fabricated windows, provide manufacturer's standard, permanently elastic, nonshrinking, and nonmigrating type recommended by sealant manufacturer for joint size and movement.

2.2 Window Type: Ballistic Level 3 as indicated on Drawings

A. Cold-Formed Steel Window Members
1. Heavy Custom Windows: Not less than 12 lb/ft. in combined weight and not less than 4-1/4 inches (38.1 mm) deep.

B. Window Finish: Factory primed
C. Glass and Glazing System: Level 3 Ballistic Glazing for glass units and glazing requirements for steel windows.

2.3 Fabrication
A. General: Fabricate steel windows of type and in sizes indicated to comply with SWI standards. Include a complete system for assembly of components and anchorage of window units.
B. Steel Finishes: Shop Primed
1. Surface Preparation: Remove mill scale and rust, if present, from uncoated steel, complying with SSPC-SP 5/NACE No. 1

PART 3 – EXECUTION

3.1 Examination
A. Examine openings, substrates, structural support, anchorage, and conditions, with Installer present, for compliance with requirements for installation tolerances and other conditions affecting performance of the Work. Verify rough opening dimensions, levelness of sill plate,
1. Masonry Surfaces: Visibly dry and free of excess mortar, sand, and other construction debris.
2. Wood Frame Walls: Dry, clean, sound, well nailed, free of voids, and without offsets at joints.
3. Proceed with installation only after unsatisfactory conditions have been corrected.

3.2. Installation
A. Comply with manufacturer's written instructions for installing windows, accessories, and other components.
B. Install windows level, plumb, square, true to line, without distortion, anchored securely in place to structural support, and in proper relation to other adjacent construction.
C. Separate corrodible surfaces from sources of corrosion or electrolytic action at points of contact with other materials according to ASTM E 2112, Section 5.12 "Dissimilar Materials."

3.3 Adjusting, Cleaning, and Protection
A. Clean factory-finished steel surfaces immediately after installing windows. Comply with manufacturer's written recommendations for final cleaning and maintenance. Avoid damaging protective coatings and finishes.
B. Clean glass immediately after installing windows. Comply with manufacturer's written recommendations for final cleaning and maintenance. Remove nonpermanent labels, and clean surfaces.
C. Protect window surfaces from contact with contaminating substances resulting from construction operations. Remove contaminants immediately according to manufacturer's written recommendations.
D. Refinish or replace windows with damaged finish.

END OF SECTION 08510

SECTION 08520

ALUMINUM WINDOWS

PART 1 - GENERAL

1.1 Description of Work
A. This specification covers the furnishing and installation of material for fixed aluminum framed windows for interior and exterior locations. Products shall be as follows or as directed by the Owner. Installation procedures shall be in accordance with the products manufacturer's recommendations. Demolition and removal of materials shall be as required to support the work.

1.2. Definitions
A. Performance class designations according to AAMA/WDMA 101/I.S.2/NAFS:
1. C: Commercial.
B. Performance grade number according to AAMA/WDMA 101/I.S.2/NAFS:
1. Design pressure number in pounds force per square foot (pascals) used to determine the structural test pressure and water test pressure.
C. Structural Test Pressure: For uniform load structural test, is equivalent to 150 percent of the design pressure.
D. Minimum Test Size: Smallest size permitted for performance class (gateway test size). Products must be tested at minimum test size or at a size larger than minimum test size to comply with requirements for performance class.

1.3. Performance Requirements
A. General: Provide aluminum windows capable of complying with performance requirements indicated, based on testing manufacturer's windows that are representative of those specified, and that are of minimum test size indicated below:
1. Size required by AAMA/WDMA 101/I.S.2/NAFS for gateway performance.
2. Size indicated on Drawings.
B. Structural Performance: Provide aluminum windows capable of withstanding the effects of the following loads, based on testing units representative of those indicated for Project that pass AAMA/WDMA 101/I.S.2/NAFS, Uniform Load Structural Test:
1. Design Wind Loads: Determine design wind loads applicable to Project from basic wind speed indicated in miles per hour (meters per second) at 33 feet (10 m) above grade, according to ASCE 7, Section 6.5, " Method 2-Analytical Procedure," based on mean roof heights above grade indicated on Drawings.
1) Basic Wind Speed: 90 mph.
2. Deflection: Design glass framing system to limit lateral deflections of glass edges to less than 1/175 of glass-edge length or 3/4 inch (19 mm), whichever is less, at design pressure based on testing performed according to AAMA/WDMA 101/I.S.2/NAFS, Uniform Load Deflection Test or structural computations.
C. Thermal Movements: Provide aluminum windows, including anchorage, that allow for thermal movements resulting from the following maximum change

(range) in ambient and surface temperatures by preventing buckling, opening of joints, overstressing of components, failure of joint sealants, failure of connections, and other detrimental effects. Base engineering calculation on surface temperatures of materials due to both solar heat gain and nighttime-sky heat loss.

a. Temperature Change (Range): 120 deg F (67 deg C), ambient; 180 deg F (100 deg C) material surfaces.

1.4. Submittals

The following information shall be provided.

A. A copy of this specification section, with addendum updates included, and all referenced and applicable sections, with addendum updates included, with each paragraph check-marked to indicate specification compliance or marked to indicate requested deviations from specification requirements. Check marks (✓) shall denote full compliance with a paragraph as a whole. If deviations from the specifications are indicated, and therefore requested by the Contractor, each deviation shall be underlined and denoted by a number in the margin to the right of the identified paragraph, referenced to a detailed written explanation of the reasons for requesting the deviation. The Construction Manager shall be the final authority for determining acceptability of requested deviations. The remaining portions of the paragraph not underlined shall signify compliance on the part of the Contractor with the specifications. Failure to include a copy of the marked-up specification sections, along with justification(s) for any requested deviations to the specification requirements, with the submittal shall be sufficient cause for rejection of the entire submittal with no further consideration.

B. Product Data: For each type of aluminum window indicated.

C. Shop Drawings: Include plans, elevations, sections, details, hardware, attachments to other work, operational clearances, and installation details

D. Samples: For each exposed finish.

E. Product Schedule: Use same designations indicated on Drawings.

F. Field quality-control test reports.

G. Product test reports.

H. Maintenance data.

1.5. Quality Assurance

A. Installer: A qualified installer, approved by manufacturer to install manufacturer's products.

B. Fenestration Standard: Comply with AAMA/WDMA 101/I.S.2/NAFS, "North American Fenestration Standard Voluntary Performance Specification for Windows, Skylights and Glass Doors," for definitions and minimum standards of performance, materials, components, accessories, and fabrication. Comply with more stringent requirements if indicated.

1. Provide AAMA, certified aluminum windows with an attached label.

C. Glazing Publications: Comply with published recommendations of glass manufacturers and with GANA's "Glazing Manual" unless more stringent requirements are indicated.

D. Preinstallation Conference: Conduct conference at Project site.

1.6. Warranty

A. Special Warranty: Manufacturer's standard form in which manufacturer agrees to repair or replace aluminum windows that fail in materials or workmanship within specified warranty period.
   1. Failures include, but are not limited to, the following:
      a) Failure to meet performance requirements.
      b) Structural failures including excessive deflection, water leakage, air infiltration, or condensation.
      c) Deterioration of metals, other materials, and metal finishes beyond normal weathering.
      d) Failure of insulating glass.
   2. Warranty Period:
      a) Window: Three, years from date of Substantial Completion.
      b) Glazing: Five years from date of Substantial Completion.
      c) Metal Finish: Five 10 years from date of Substantial Completion.

PART 2 - PRODUCTS

2.1. Materials

A. Aluminum Extrusions: Alloy and temper recommended by aluminum window manufacturer for strength, corrosion resistance, and application of required finish, but not less than 22,000-psi (150-MPa) ultimate tensile strength, not less than 16,000-psi (110-MPa) minimum yield strength, and not less than 0.062-inch (1.6-mm) thickness at any location for the main frame and sash members.

B. Fasteners: Aluminum, nonmagnetic stainless steel, epoxy adhesive, or other materials warranted by manufacturer to be noncorrosive and compatible with aluminum window members, trim, hardware, anchors, and other components.
   1. Reinforcement: Where fasteners screw anchor into aluminum less than 0.125 inch (3.2 mm) thick, reinforce interior with aluminum or nonmagnetic stainless steel to receive screw threads, or provide standard, noncorrosive, pressed-in, splined grommet nuts.
   2. Exposed Fasteners: Unless unavoidable for applying hardware, do not use exposed fasteners. For application of hardware, use fasteners that match finish of member or hardware being fastened, as appropriate.

C. Anchors, Clips, and Accessories: Aluminum, nonmagnetic stainless steel, or zinc-coated steel or iron complying with ASTM B 633 for SC 3 severe service conditions; provide sufficient strength to withstand design pressure indicated.

D. Reinforcing Members: Aluminum, nonmagnetic stainless steel, or nickel/chrome-plated steel complying with ASTM B 456 for Type SC 3 severe service conditions, or zinc-coated steel or iron complying with ASTM B 633 for SC 3 severe service conditions; provide sufficient strength to withstand design pressure indicated.

E. Compression-Type Weather Stripping: Provide compressible weather stripping designed for permanently resilient sealing under bumper or wiper action and for complete concealment when aluminum window is closed.
   1. Weather-Stripping Material: Elastomeric cellular preformed gaskets complying with ASTM C 509.

2. Weather-Stripping Material: Dense elastomeric gaskets complying with ASTM C 864.
3. Weather-Stripping Material: Manufacturer's standard system and materials complying with AAMA/WDMA 101/I.S.2/NAFS.

F. Replaceable Weather Seals: Comply with AAMA 701/702.

G. Sealant: For sealants required within fabricated windows, provide window manufacturer's standard, permanently elastic, nonshrinking, and nonmigrating type recommended by sealant manufacturer for joint size and movement.

2.2 Window

A. Window Type: As indicated on Drawings.
B. AAMA/WDMA Performance Requirements: Provide aluminum windows of performance indicated that comply with AAMA/WDMA 101/I.S.2/NAFS.
   1. Performance Class and Grade: C30.
C. Sound Transmission Class (STC): Provide glazed windows rated for not less than 35, STC when tested for laboratory sound transmission loss according to ASTM E 90 and determined by ASTM E 413.

2.3 Glazing

A. Glass: Interior windows: Clear, insulating-glass units.
B. Glass: Exterior windows: Clear, insulating-glass units, argon gas filled, with low-E coating sputtered on second surface.
C. Glazing System: Manufacturer's standard factory-glazing system that produces weather tight seal.

2.4. Fabrication

A. Fabricate aluminum windows in sizes indicated. Include a complete system for assembling components and anchoring windows.
B. Mullions: Provide mullions and cover plates as shown, matching window units, complete with anchors for support to structure and installation of window units. Allow for erection tolerances and provide for movement of window units due to thermal expansion and building deflections, as indicated. Provide mullions and cover plates capable of withstanding design loads of window units.
C. Factory-Glazed Fabrication: Glaze aluminum windows in the factory where practical and possible for applications indicated. Comply with requirements in Division 08 Section "Glazing" and with AAMA/WDMA 101/I.S.2/NAFS.

D. Glazing Stops: Provide snap-on glazing stops coordinated with Division 08 Section "Glazing" and glazing system indicated. Provide glazing stops to match sash and ventilator frames.

2. 5 Finishes, General

A. Comply with NAAMM's "Metal Finishes Manual for Architectural and Metal Products" for recommendations for applying and designating finishes.
B. Appearance of Finished Work: Variations in appearance of abutting or adjacent pieces are acceptable if they are within one-half of the range of approved Samples. Noticeable variations in the same piece are not

acceptable. Variations in appearance of other components are acceptable if they are within the range of approved Samples and are assembled or installed to minimize contrast.

2.6 Aluminum Finishes

A. Finish designations prefixed by AA comply with the system established by the Aluminum Association for designating aluminum finishes.

B. Class II, Clear Anodic Finish: AA-M12C22A31 (Mechanical Finish: nonspecular as fabricated; Chemical Finish: etched, medium matte; Anodic Coating: Architectural Class II, clear coating 0.010 mm or thicker) complying with AAMA 611, to match existing.

PART 3 - EXECUTION

3.1 Installation

A. Comply with Drawings, Shop Drawings, and manufacturer's written instructions for installing windows, hardware, accessories, and other components.

B. Install windows level, plumb, square, true to line, without distortion or impeding thermal movement, anchored securely in place to structural support, and in proper relation to wall flashing and other adjacent construction.

C. Set sill members in bed of sealant or with gaskets, as indicated, for weather tight construction.

D. Separate aluminum and other corrodible surfaces from sources of corrosion or electrolytic action at points of contact with other materials.

3.2 Field Quality Control

A. Testing Agency: Engage a qualified testing agency to perform tests and inspections and prepare test reports.

1. Testing and inspecting agency will interpret tests and state in each report whether tested work complies with or deviates from requirements.

3.3. Adjusting, Cleaning, and Protection

A. Clean aluminum surfaces immediately after installing windows. Avoid damaging protective coatings and finishes. Remove excess sealants, glazing materials, dirt, and other substances.

B. Clean factory-glazed glass immediately after installing windows. Comply with manufacturer's written recommendations for final cleaning and maintenance. Remove nonpermanent labels, and clean surfaces.

C. Remove and replace glass that has been broken, chipped, cracked, abraded, or damaged during construction period.

D. Protect window surfaces from contact with contaminating substances resulting from construction operations. In addition, monitor window surfaces adjacent to and below exterior concrete and masonry surfaces during construction for presence of dirt, scum, alkaline deposits, stains, or other contaminants. If contaminating substances do contact window surfaces, remove contaminants immediately according to manufacturer's written recommendations.

END OF SECTION 08520

SECTION 08710

DOOR HARDWARE

PART 2 - - GENERAL

2.1 RELATED DOCUMENTS

A. Drawings and general provisions of the Contract, including General and Supplementary Conditions and Division 1 Specification Sections, apply to this Section.

2.2 SUMMARY

A. This Section includes the following:
   1. Commercial door hardware for the following:
      a. Swinging doors
      b. Other doors to the extent indicated.
   2. Cylinders for doors specified in other Section

B. Related Sections include the following:
   1. Division 8 Section 08110.
   2. Division 8 Section 08211.
   3. Division 8 Section 08470.

C. Installation: General types and approximate quantities of door hardware are indicated in the list of door hardware sets to provide a basis for the cost of installation and other Work that is part of the Contract Sum but not included in door hardware allowance.

2.3 SUBMITTALS

The following information shall be provided.

1. A copy of this specification section, with addendum updates included, and all referenced and applicable sections, with addendum updates included, with each paragraph check-marked to indicate specification compliance or marked to indicate requested deviations from specification requirements. Check marks (✓) shall denote full compliance with a paragraph as a whole. If deviations from the specifications are indicated, and therefore requested by the Contractor, each deviation shall be underlined and denoted by a number in the margin to the right of the identified paragraph, referenced to a detailed written explanation of the reasons for requesting the deviation. The Construction Manager shall be the final authority for determining acceptability of requested deviations. The remaining portions of the paragraph not underlined shall signify compliance on the part of the Contractor with the specifications. Failure to include a copy of the marked-up specification sections, along with justification(s) for any requested deviations to the specification requirements, with the submittal shall be sufficient cause for rejection of the entire submittal with no further consideration.

A. Product Data: Include construction and installation details, material descriptions, dimensions of individual components and profiles, and finishes.

B. Samples for Verification: Submit minimum Samples of each type of finish required, except primed finish.

C. Maintenance Data: For each type of door hardware to include in maintenance manuals. Include final hardware and keying schedule.
D. Warranty: Special warranty specified in this Section.
E. Other Action Submittals:
1. Door Hardware Sets: Prepared by or under the supervision of Architectural Hardware Consultant, detailing fabrication and assembly of door hardware, as well as procedures and diagrams. Coordinate the final door hardware sets with doors, frames, and related work to ensure proper size, thickness, hand, function, and finish of door hardware.
a. Format: Comply with scheduling sequence and vertical format in DHI's "Sequence and Format for the Hardware Schedule." Double space entries, and number and date each page.
b. Content: Include the following information:
1) Identification number, location, hand, fire rating, and material of each door and frame.
2) Type, style, function, size, quantity, and finish of each door hardware item.
3) Complete designations of every item required for each door or opening including name and manufacturer.
4) Fastenings and other pertinent information.
5) Location of each door hardware set, cross-referenced to Drawings, both on floor plans and in door and frame schedule.
6) Explanation of abbreviations, symbols, and codes contained in schedule.
7) Mounting locations for door hardware.
8) Door and frame sizes and materials.
9) List of related door devices specified in other Sections for each door and frame.
c. Submittal Sequence: Submit initial draft of final schedule along with essential Product Data to facilitate the fabrication of other work that is critical in Project construction schedule. Submit the final door hardware sets after Samples, Product Data, coordination with Shop Drawings of other work, delivery schedules, and similar information has been completed and accepted.
2. Keying Schedule: Prepared by or under the supervision of Architectural Hardware Consultant detailing Owner's final keying instructions for locks. Include schematic keying diagram and index each key set to unique door designations.

2.4 QUALITY ASSURANCE
A. Installer Qualifications: An employer of workers trained and approved by lock manufacturer.
1. Installer's responsibilities include supplying and installing door hardware and providing a qualified Architectural Hardware Consultant available during the course of the Work to consult with Contractor, Construction manager, and Owner about door hardware and keying.
2. Installer shall have warehousing facilities in Project's vicinity.
3. Scheduling Responsibility: Preparation of door hardware and keying schedules.
B. Architectural Hardware Consultant Qualifications: A person who is currently certified by DHI as an Architectural Hardware Consultant and who is experienced in

providing consulting services for door hardware installations that are comparable in material, design, and extent to that indicated for this Project.

C. Source Limitations: Obtain each type and variety of door hardware from a single manufacturer, unless otherwise indicated.

D. Fire-Rated Door Assemblies: Assemblies complying with NFPA 80 that are listed and labeled by a testing and inspecting agency acceptable to authorities having jurisdiction, for fire ratings indicated, based on testing according to NFPA 252.
Test Pressure: After 5 minutes into the test, neutral pressure level in furnace shall be established at 40 inches or less above the sill.

E. Keying Conference: Conduct conference at Project site to comply with requirements conference participants shall include Installer's Architectural Hardware Consultant and Owner's security consultant. Incorporate keying conference decisions into final keying schedule after reviewing door hardware keying system including, but not limited to, the following:
1. Function of building, flow of traffic, purpose of each area, degree of security required, and plans for future expansion.
2. Preliminary key system schematic diagram.
3. Address for delivery of keys.

F. Pre-installation Conference: Conduct conference at Project site to comply with requirements in Division 1 Section "Project Management and Coordination."

2.5 DELIVERY, STORAGE, AND HANDLING

A. Inventory door hardware on receipt and provide secure lock-up for door hardware delivered to Project site.

B. Tag each item or package separately with identification related to the final door hardware sets, and include basic installation instructions, templates, and necessary fasteners with each item or package.

C. Templates: Distribute door hardware templates for doors, frames, and other work specified to be factory prepared for installing door hardware. Check Shop Drawings of other work to confirm that adequate provisions are made for locating and installing door hardware to comply with indicated requirement

D. Existing Openings: Where new hardware components are scheduled for application to existing construction or where modifications to existing door hardware are required, field verify existing conditions and coordinate installation of door hardware to suit opening conditions and to provide for proper operation.

2.6 WARRANTY

A. Special Warranty: Manufacturer's standard form in which manufacturer agrees to repair or replace components of door hardware that fail in materials or workmanship within specified warranty period.
1. Failures include, but are not limited to, the following:
a. Structural failures including excessive deflection, cracking, or breakage.
b. Faulty operation of operators and door hardware.
c. Deterioration of metals, metal finishes, and other materials beyond normal weathering and use.
2. Warranty Period: Two years from date of Substantial Completion, except as follows:
a. Exit Devices: Two years from date of Substantial Completion.
b. Manual Closers: 10 years from date of Substantial Completion.

2.7 MAINTENANCE SERVICE

A. Maintenance Tools and Instructions: Furnish a complete set of specialized tools and maintenance instructions as needed for Owner's continued adjustment, maintenance, and removal and replacement of door hardware.

PART 3 - - PRODUCTS

3.1 SCHEDULED DOOR HARDWARE

A. General: Provide door hardware for each door to comply with requirements in this Section and door hardware sets indicated .
   1. Door Hardware Sets: Provide quantity, item, size, finish or color indicated, and named manufacturers' products.
   2. Sequence of Operation: Provide electrified door hardware function, sequence of operation, and interface with other building control systems indicated.

B. Designations: Requirements for design, grade, function, finish, size, and other distinctive qualities of each type of door hardware are indicated in Part 3 "Door Hardware Sets" Article. Products are identified by using door hardware designations, as follows:
   1. References to BHMA Standards: Provide products complying with these standards and requirements for description, quality, and function.

C. In other Part 2 articles where titles below introduce lists, the following requirements apply to product selection:
   1. Available Manufacturers: Subject to compliance with requirements, manufacturers offering products that may be incorporated into the Work include, but are not limited to, manufacturers specified.
   2. Manufacturers: Subject to compliance with requirements, provide products by the manufacturers specified.

3.2 HINGES, GENERAL

A. Quantity: Provide the following, unless otherwise indicated:
   1. Three Hinges: For doors with heights 61 to 90 inches.

B. Template Requirements: Except for hinges and pivots to be installed entirely (both leaves) into wood doors and frames, provide only template-produced units.

C. Hinge Weight: Unless otherwise indicated, provide the following:
   1. Doors with Closers: Antifriction-bearing hinges.
   2. Interior Doors: Standard-weight hinges.

D. Hinge Base Metal: Unless otherwise indicated, provide the following:
   1. Exterior Hinges: Stainless steel, with stainless-steel pin
   2. Interior Hinges: Steel, with steel pin
   3. Hinges for Fire-Rated Assemblies: Steel, with steel pin

E. Hinge Options: Where indicated in door hardware sets or on Drawings:
   1. Nonremovable Pins: Provide set screw in hinge barrel that, when tightened into a groove in hinge pin, prevents removal of pin while door is closed; for outswinging exterior doors
   2. Corners: Square

F. Fasteners: Comply with the following:
   1. Machine Screws: For metal doors and frames. Install into drilled and tapped holes.
   2. Wood Screws: For wood doors and frames.
   3. Threaded-to-the-Head Wood Screws: For fire-rated wood doors.

4. Screws: Phillips flat-head; machine screws (drilled and tapped holes) for metal doors wood screws for wood doors and frames Finish screw heads to match surface of hinges.

3.3 HINGES

A. Butts and Hinges: BHMA A156.1. Listed under Category A in BHMA's "Certified Product Directory."
B. Template Hinge Dimensions: BHMA A156.7.
C. Manufacturers:
   1. Bommer Hinge Company (BOM)
   2. PBB Hinges (PBB)
   3. Ives(IVE)

3.4 CONTINUOUS HINGES

A. General: Minimum 0.120-inch- thick, hinge leaves with minimum overall width of 4 inches; fabricated to full height of door and frame and to template screw locations; with components finished after milling and drilling are complete.
   1. Fire Pins: Steel pins to hold labeled fire doors in place if required by tested listing.
B. Continuous, Gear-Type Hinges: Extruded-aluminum, pinless, geared hinge leaves; joined by a continuous extruded-aluminum channel cap; with concealed, self-lubricating thrust bearings.
   1 Manufacturer
      a. PBB Hinges (PBB)
      b. Select Products Limited (SPL).
      c. Zero International (ZRO).

3.5 LOCKS AND LATCHES, GENERAL

A. Accessibility Requirements: Where indicated to comply with accessibility requirements, comply with the U.S. Architectural & Transportation Barriers Compliance Board's "Americans with Disabilities Act (ADA),
   1. Provide operating devices that do not require tight grasping, pinching, or twisting of the wrist and that operate with a force of not more than 5 lbf.
B. Latches and Locks for Means of Egress Doors: Comply with NFPA 101. Latches shall not require more than 15 lbf to release the latch. Locks shall not require use of a key, tool, or special knowledge for operation.
   1. Dummy Trim: Match lock trim and escutcheons.
   2. Lockset Designs: Corbin/Russwin NSM
C. Lock Throw: Comply with testing requirements for length of bolts required for labeled fire doors, and as follows:
   1. Mortise Locks: Minimum 3/4-inch latchbolt throw.
   2. Deadbolts: Minimum 1-inch bolt throw.
D. Backset: 2-3/4 inches, unless otherwise indicated.
E. Strikes: Manufacturer's standard strike with strike box for each latchbolt or lock bolt, with curved lip extended to protect frame, finished to match door hardware set, and as follows:

3.6 MECHANICAL LOCKS AND LATCHES

A. Lock Functions: Function numbers and descriptions indicated in door hardware sets comply with the following:
   1. Mortise Locks: BHMA A156.

B. Mortise Locks: Stamped steel case with steel or brass parts; BHMA A156.13 Grade 1.
   1. Manufacturers:
      a. Best Access Systems; Div. of The Stanley Works (BAS).
      b. Corbin/Russwin, Div. of ASSA/Abloy (COR)
      c. PDQ Manufacturing (PDQ)

3.7 DOOR BOLTS

A. Bolt Throw: Comply with testing requirements for length of bolts required for labeled fire doors, and as follows
   1. Fire-Rated Surface Bolts: Minimum 1-inch throw; listed and labeled for fire-rated doors.
   2. Mortise Flush Bolts: Minimum 3/4-inch throw.
B. Dustproof Strikes: BHMA A156.16, Grade 1.
C. Manual Flush Bolts: BHMA A156.16, Grade 1 designed for mortising into door edge.
   1. Manufacturer
      a. Burns Manufacturing (BM)
      b. Door Controls International (DCI).
      c. IVES Hardware; an Ingersoll-Rand Company (IVS).
D. Automatic and Self-Latching Flush Bolts: BHMA A156.3, Grade 1 designed for mortising into door edge.
   1. Manufacturers:
      a. Burns Manufacturing (BM)
      b. Door Controls International (DCI).
      c. IVES Hardware; an Ingersoll-Rand Company (IVS).

3.8 EXIT DEVICES

A. Exit Devices: BHMA A156., Grade 1
B. Accessibility Requirements: Where handles, pulls, latches, locks, and other operating devices are indicated to comply with accessibility requirements, comply with the U.S. Architectural & Transportation Barriers Compliance Board's "Americans with Disabilities Act (ADA), Accessibility Guidelines for Buildings and Facilities (ADAAG)."
   1. Provide operating devices that do not require tight grasping, pinching, or twisting of the wrist and that operate with a force of not more than 5 lbf
C. Exit Devices for Means of Egress Doors: Comply with NFPA 101. Exit devices shall not require more than 15 lbf to release the latch. Locks shall not require use of a key, tool, or special knowledge for operation.
D. Panic Exit Devices: Listed and labeled by a testing and inspecting agency acceptable to authorities having jurisdiction, for panic protection, based on testing according to UL 305.
E. Fire Exit Devices: Devices complying with NFPA 80 that are listed and labeled by a testing and inspecting agency acceptable to authorities having jurisdiction, for fire and panic protection, based on testing according to UL 305 and NFPA 252.
F. Removable Mullions: BHMA A156.3.
G. Outside Trim: material and finish to match locksets, unless otherwise indicated.
   1. Match design for locksets and latchsets, unless otherwise indicated.
H. Through Bolts: For exit devices and trim.
I. Manufacturers:
   Precision, Div. of The Stanley Works (PRE)

Sargent, Div. of ASSA/Abloy (SGT)
Von Duprin, an Ingersoll-Rand Company (VD)

3.9 LOCK CYLINDERS

A. Standard Lock Cylinders: BHMA A156.5, Grade 2,

B. Cylinders: Manufacturer's standard tumbler type, constructed from brass or bronze, stainless steel, or nickel silver, and complying with the following:
   1. Number of Pins: Six
   2. Mortise Type: Threaded cylinders with rings and straight- or clover-type cam.
   3. Rim Type: Cylinders with back plate, flat-type vertical or horizontal tailpiece, and raised trim ring.

C. Permanent Cores: Manufacturer's standard; finish face to match lockset; complying with the following:

D. Construction Keying: Comply with the following:
   1. Construction Master Keys: Provide cylinders with feature that permits voiding of construction keys without cylinder removal. Provide 10 construction master keys.

E. Manufacturers:
   1. Corbin/Russwin, Div. of ASSA/Abloy (COR), to match existing keying.

3.10 KEYING

A. Keying System: Factory registered, complying with guidelines in BHMA A156.28, Appendix A. Incorporate decisions made in keying conference, and as follows:
   1. Master Key System: Cylinders are operated by a change key and a master key.

B. Keys: Nickel silver.
   1. Stamping: Permanently inscribe each key with a visual key control number .
   2. Quantity: In addition to one extra key blank for each lock, provide the following:
      a. Cylinder Change Keys: Three.
      b. Master Keys: Five.

3.11 CLOSERS

A. Accessibility Requirements: Where handles, pulls, latches, locks, and other operating devices are indicated to comply with accessibility requirements, comply with the U.S. Architectural & Transportation Barriers Compliance Board's "Americans with Disabilities Act.
   1. Comply with the following maximum opening-force requirements:
      a. Interior, Non-Fire-Rated Hinged Doors: 5 lbf applied perpendicular to door.
      b. Sliding or Folding Doors: 5 lbf applied parallel to door at latch.
      c. Fire Doors: Minimum opening force allowable by authorities having jurisdiction.

B. Door Closers for Means of Egress Doors: Comply with NFPA 101. Door closers shall not require more than 30 lbf to set door in motion and not more than 15 lbf to open door to minimum required width.

C. Size of Units: Unless otherwise indicated, comply with manufacturer's written recommendations for size of door closers depending on size of door, exposure to weather, and anticipated frequency of use. Provide factory-sized closers, adjustable to meet field conditions and requirements for opening force.

D. Surface Closers: BHMA A156.4, Grade 1. Provide type of arm required for closer to be located on non-public side of door, unless otherwise indicated.
   1. Manufacturers:
      a. LCN Closers; an Ingersoll-Rand Company (LCN).
      b. PDQ Manufacturing (PDQ)
      c. SARGENT Manufacturing Company; an ASSA ABLOY Group company (SGT).

E. Coordinators: BHMA A156.3.

3.12 PROTECTIVE TRIM UNITS

A. Size: 1-1/2 inches less than door width on push side and 1/2 inch less than door width on pull side, by height specified in door hardware sets.

B. Fasteners: Manufacturer's standard machine or self-tapping screws.

C. Metal Protective Trim Units: BHMA A156.6; beveled top and 2 sides; fabricated from the following material:
   1. Material: 0.050-inch- thick brass/bronze.
   2. Manufacturers:
      a. Burns Manufacturing Incorporated (BM)
      b. IVES Hardware; an Ingersoll-Rand Company (IVS).
      c. Trimco (TRM)

3.13 STOPS AND HOLDERS

A. Stops and Bumpers: BHMA A156.16, Grade 1
   1. Provide floor stops for doors unless wall or other type stops are scheduled or indicated. Do not mount floor stops where they will impede traffic. Where floor or wall stops are not appropriate, provide overhead holders.

B. Mechanical Door Holders: BHMA A156.16, Grade 1.

C. Silencers for Metal Door Frames: BHMA A156.16, Grade 1; neoprene or rubber, minimum diameter 1/2 inch ; fabricated for drilled-in application to frame.

D. Manufacturers:
   a. Burns Manufacturing Incorporated (BM)
   b. IVES Hardware; an Ingersoll-Rand Company (IVS).
   c. Trimco (TRM)

3.14 DOOR GASKETING

A. Standard: BHMA A156.22. Listed under Category J in BHMA's "Certified Product Directory."

B. General: Provide continuous weather-strip gasketing on exterior doors and provide smoke, light, or sound gasketing on interior doors where indicated or scheduled. Provide noncorrosive fasteners for exterior applications and elsewhere as indicated.
   1. Perimeter Gasketing: Apply to head and jamb, forming seal between door and frame.
   2. Meeting Stile Gasketing: Fasten to meeting stiles, forming seal when doors are closed.
   3. Door Bottoms: Apply to bottom of door, forming seal with threshold when door is closed.

C. Air Leakage: Not to exceed 0.50 cfm per foot of crack length for gasketing other than for smoke control, as tested according to ASTM E 283.

D. Smoke-Labeled Gasketing: Assemblies complying with NFPA 105 that are listed and labeled by a testing and inspecting agency acceptable to authorities having

jurisdiction, for smoke-control ratings indicated, based on testing according to UL 1784.

1. Provide smoke-labeled gasketing on 20-minute-rated doors and on smoke-labeled doors.

E. Fire-Labeled Gasketing: Assemblies complying with NFPA 80 that are listed and labeled by a testing and inspecting agency acceptable to authorities having jurisdiction, for fire ratings indicated, based on testing according to NFPA 252.

1. Test Pressure: After 5 minutes into the test, neutral pressure level in furnace shall be established at 40 inches or less above the sill

F. Replaceable Seal Strips: Provide only those units where resilient or flexible seal strips are easily replaceable and readily available from stocks maintained by manufacturer.

G. Gasketing Materials: ASTM D 2000 and AAMA 701/702.

H. Manufacturers:

1. National Guard Products (NGP).
2. Reese Enterprises (REE)
3. Zero (ZER)

3.15 THRESHOLDS

A. Standard: BHMA A156.21. Listed under Category J in BHMA's "Certified Product Directory."

B. Accessibility Requirements: Where thresholds are indicated to comply with accessibility requirements, comply with the U.S. Architectural & Transportation Barriers Compliance Board's "Americans with Disabilities Act (ADA).

1. Bevel raised thresholds with a slope of not more than 1:2. Provide thresholds not more than 1/2 inch high.

C. Thresholds for Means of Egress Doors: Comply with NFPA 101. Maximum 1/2 inch high.

D Manufacturers:

1. National Guard Products (NGP).
2. Reese Enterprises (REE)
3. Zero (ZER)

3.16 MISCELLANEOUS DOOR HARDWARE

A. Boxed Power Supplies: Modular unit in NEMA ICS 6, Type 4 enclosure; filtered and regulated; voltage rating and type matching requirements of door hardware served; and listed and labeled for use with fire alarm systems.

B. Pushbutton Access Control Locks: Where scheduled, provide stand-alone electronic pushbutton access control locks equipped with privacy feature for temporarily disabling access codes when the room is occupied. Upon exit, access codes will be enabled.

Manufacturers:

Alarm Lock Systems (ALA)

C. Automatic Door Operators: Provide low-energy operators in compliance with ANSI A156.19. Operator to provide 24VDC 1A output power for releasing hardware.

1. Manufacturers:
   a. Detex Corporation (DET)
   b. LCN Closers, an Ingersoll-Rand Company (LCN)
   c. Record-usa (REC)

3.17 FABRICATION

A. Manufacturer's Nameplate: Do not provide products that have manufacturer's name or trade name displayed in a visible location except in conjunction with required fire-rated labels and as otherwise approved by Construction Manager.
   1. Manufacturer's identification is permitted on rim of lock cylinders only.

B. Base Metals: Produce door hardware units of base metal, fabricated by forming method indicated, using manufacturer's standard metal alloy, composition, temper, and hardness. Furnish metals of a quality equal to or greater than that of specified door hardware units and BHMA A156.18. Do not furnish manufacturer's standard materials or forming methods if different from specified standard.

C. Fasteners: Provide door hardware manufactured to comply with published templates generally prepared for machine, wood, and sheet metal screws. Provide screws according to commercially recognized industry standards for application intended, except aluminum fasteners are not permitted. Provide Phillips flat-head screws with finished heads to match surface of door hardware, unless otherwise indicated.
   1. Concealed Fasteners: For door hardware units that are exposed when door is closed, except for units already specified with concealed fasteners. Do not use through bolts for installation where bolt head or nut on opposite face is exposed unless it is the only means of securely attaching the door hardware. Where through bolts are used on hollow door and frame construction, provide sleeves for each through bolt.
   2. Steel Machine or Wood Screws: For the following fire-rated applications:
      a. Mortise hinges to doors.
      b. Strike plates to frames.
      c. Closers to doors and frame
   3. Fasteners for Wood Doors: Comply with requirements in DHI WDHS.2, "Recommended Fasteners for Wood Doors."

3.18 FINISHES

A. Standard: BHMA A156.18, 612 or US10 finish. Closers sprayed to match.

B. Protect mechanical finishes on exposed surfaces from damage by applying a strippable, temporary protective covering before shipping.

C. Appearance of Finished Work: Variations in appearance of abutting or adjacent pieces are acceptable if they are within one-half of the range of approved Samples. Noticeable variations in the same piece are not acceptable. Variations in appearance of other components are acceptable if they are within the range of approved Samples and are assembled or installed to minimize contrast.

PART 4 - EXECUTION

4.1 EXAMINATION

A. Examine doors and frames, with Installer present, for compliance with requirements for installation tolerances, labeled fire door assembly construction, wall and floor construction, and other conditions affecting performance.

B. Examine roughing-in for electrical power systems to verify actual locations of wiring connections before electrified door hardware installation.

C. Proceed with installation only after unsatisfactory conditions have been corrected.

4.2 PREPARATION

A. Steel Doors and Frames: Comply with DHI A115 Series.
   1. Surface-Applied Door Hardware: Drill and tap doors and frames according to ANSI A250.6.

B. Wood Doors: Comply with DHI A115-W Series.

4.3 INSTALLATION

A. Mounting Heights: Mount door hardware units at heights indicated as follows unless otherwise indicated or required to comply with governing regulations.
   1. Standard Steel Doors and Frames: DHI's "Recommended Locations for Architectural Hardware for Standard Steel Doors and Frames."
   2. Wood Doors: DHI WDHS.3, "Recommended Locations for Architectural Hardware for Wood Flush Doors."

B. Install each door hardware item to comply with manufacturer's written instructions. Where cutting and fitting are required to install door hardware onto or into surfaces that are later to be painted or finished in another way, coordinate removal, storage, and reinstallation of surface protective trim units with finishing work specified in Division 9 Sections. Do not install surface-mounted items until finishes have been completed on substrates involved.
   1. Set units level, plumb, and true to line and location. Adjust and reinforce attachment substrates as necessary for proper installation and operation.
   2. Drill and countersink units that are not factory prepared for anchorage fasteners. Space fasteners and anchors according to industry standards.

C. Thresholds: Set thresholds for exterior and acoustical doors in full bed of sealant complying with requirements specified in Division 7 Section "Joint Sealants."

4.4 FIELD QUALITY CONTROL

A Architectural Hardware Consultant will inspect door hardware and state in each report whether installed work complies with or deviates from requirements, including whether door hardware is properly installed and adjusted.

4.5 ADJUSTING

A. Initial Adjustment: Adjust and check each operating item of door hardware and each door to ensure proper operation or function of every unit. Replace units that cannot be adjusted to operate as intended. Adjust door control devices to compensate for final operation of heating and ventilating equipment and to comply with referenced accessibility requirements.
   1. Spring Hinges: Adjust to achieve positive latching when door is allowed to close freely from an open position of 30 degrees.
   2. Door Closers: Unless otherwise required by authorities having jurisdiction, adjust sweep period so that, from an open position of 70 degrees, the door will take at least 3 seconds to move to a point 3 inches from the latch, measured to the leading edge of the door.

4.6 CLEANING AND PROTECTION

A. Clean adjacent surfaces soiled by door hardware installation.
B. Clean operating items as necessary to restore proper function and finish.
C. Provide final protection and maintain conditions that ensure that door hardware is without damage or deterioration at time of Substantial Completion.

4.7 HARDWARE SCHEDULE

HEADING #1

DOORS: 01, 06

EACH DOOR TO HAVE:

1	CONTINUOUS HINGE	SL-11HD
1	PUSH-PULL SET	M422 X M26D X TYPE 5HD X TYPE 9HD
1	OPERATOR	8100SP X TDM
1	DOOR STOP	523

NOTE: SEQUENCE OPERATION WITH OTHER DOOR IN VESTIBULE
COORDINATE INSTALLATION WITH SECURITY AND ELECTRICAL SYSTEM

HEADING #2

DOORS: 02, 05

EACH DOOR TO HAVE:

1	CONTINUOUS HINGE	SL-11HD
1	MAGNETIC LOCK	2280
1	DEADLOCK	1850S
2	CYLINDERS	
1	PUSH-PULL SET	M422 X M26D X TYPE 5HD X TYPE 9HD
1	OPERATOR	8100SP
1	ACTUATOR	614SS
2	LOCKOUT SWITCHES	1078 X RACHET ACTION X CUSTOM WORDING
1	DOOR STOP	523
1	THRESHOLD	896S

NOTE: SEQUENCE OPERATION WITH OTHER DOOR IN VESTIBULE
MAGNETIC LOCK TO LOCK DOOR WHEN SIGNALLED FROM LOCKOUT SWITCH AND SERVE AS LOCKOUT FOR DOOR
LOCATE LOCKOUT SWITCH WHERE INDICATED ON PLANS
COORDINATE INSTALLATION WITH SECURITY AND ELECTRICAL SYSTEM
BALANCE OF HARDWARE BY DOOR MANUFACTURER
LOCKOUT SWITCHES TO HAVE RACHET ACTION AND "PRESS TO LOCK DOOR" TEXT

HEADING #3

DOORS: 03, 04

EACH REVOLVING DOOR TO HAVE:

1 CYLINDER

NOTE: BALANCE OF HARDWARE BY DOOR MANUFACTURER
COORDINATE INSTALLATION WITH SECURITY SYSTEM

HEADING #4

DOORS: 07

EACH DOOR TO HAVE:

3	HINGES	BB81
1	DEADLOCK	MR134
1	PUSH PLATE	54
1	PULL PLATE	89-4
1	CLOSER	7100DSHO
1	KICKPLATE	KP X B4E X CSK

HEADING #5

DOORS: 08

EXISTING TO REMAIN

HEADING #6

DOORS: 09

1 CYLINDER

NOTE: BALANCE OF HARDWARE BY DOOR MANUFACTURER

END OF SECTION 08710

SECTION 09250

GYPSUM BOARD

- GENERAL

1.1 DESCRIPTION

SCOPE

1. This Section specifies interior gypsum board.
2. This Section specifies Kevlar ballistic material

RELATED SECTIONS

Division 9 Section 09911 for primers applied to gypsum board surfaces.

1.2 SUBMITTALS

A. The following information shall be provided in accordance with Section 01330.

1. A copy of this specification section, with addendum updates included, and all referenced and applicable sections, with addendum updates included, with each paragraph check-marked to indicate specification compliance or marked to indicate requested deviations from specification requirements. Check marks (✓) shall denote full compliance with a paragraph as a whole. If deviations from the specifications are indicated, and therefore requested by the Contractor, each deviation shall be underlined and denoted by a number in the margin to the right of the identified paragraph, referenced to a detailed written explanation of the reasons for requesting the deviation. The Construction Manager shall be the final authority for determining acceptability of requested deviations. The remaining portions of the paragraph not underlined shall signify compliance on the part of the Contractor with the specifications. Failure to include a copy of the marked-up specification sections, along with justification(s) for any requested deviations to the specification requirements, with the submittal shall be sufficient cause for rejection of the entire submittal with no further consideration.
2. Product data for each type of product indicated

1.3 STORAGE AND HANDLING

A. Store materials inside under cover and keep them dry and protected against damage from weather, condensation, direct sunlight, construction traffic, and other causes. Stack panels flat to prevent sagging.

1.4 PROJECT CONDITIONS

A. Environmental Limitations: Comply with ASTM C 840 requirements or gypsum board manufacturer's written recommendations, whichever are more stringent.

B. Do not install interior products until installation areas are enclosed and conditioned.

Do not install panels that are wet, those that are moisture damaged, and those that are mold damaged.

Indications that panels are wet or moisture damaged include, but are not limited to, discoloration, sagging, or irregular shape.

Indications that panels are mold damaged include, but are not limited to, fuzzy or splotchy surface contamination and discoloration.

- PRODUCTS

2.1 PANELS, GENERAL

RECYCLED CONTENT

1. Provide gypsum panel products with recycled content such that postconsumer recycled content plus one-half of pre-consumer recycled content constitutes a minimum of 50 percent by weight.

SIZE

1. Provide in maximum lengths and widths available that will minimize joints in each area and that correspond with support system indicated.

2.2 INTERIOR GYPSUM BOARD

A. GENERAL

1. Complying with ASTM C 36/C 36M or ASTM C 1396/C 1396M, as applicable to type of gypsum board indicated and whichever is more stringent.
2. Available Manufacturers: Subject to compliance with requirements, manufacturers offering products that may be incorporated into the Work include, but are not limited to, the following:
   a. American Gypsum Co.
   b. BPB America Inc.
   c. G-P Gypsum.
   d. Lafarge North America Inc.
   e. National Gypsum Company.
   f. PABCO Gypsum.
   g. Temple.
   h. USG Corporation.

REGULAR TYPE

Thickness: 5/8 inch.
Long Edges: Tapered.

TYPE X

Thickness: 5/8 inch.
Long Edges: Tapered.

CEILING TYPE

Thickness: 5/8 inch.
Long Edges: Tapered.
Manufactured to have more sag resistance than regular-type gypsum board.

2.3 EXTERIOR CEILINGS AND SOFFITS

A. CEMENTITIOUS SOFFIT BOARD

1. ANSI A118.9, with manufacturer's standard edges.
2. Available Products: Subject to compliance with requirements, products that may be incorporated into the Work include, but are not limited to, the following:
   i. Custom Building Products; Wonderboard.
   j. FinPan, Inc.; Util-A-Crete Concrete Backer Board.
   k. USG Corporation; DUROCK Cement Board.

Thickness: 5/8 inch.

2.4 TRIM ACCESSORIES

A. INTERIOR TRIM
1. ASTM C 1047.
2. Material: Galvanized or aluminum-coated steel sheet, rolled zinc, plastic, or paper-faced galvanized steel sheet.
3. Shapes:
a. Cornerbead.
b. LC-Bead: J-shaped; exposed long flange receives joint compound.
c. L-Bead: L-shaped; exposed long flange receives joint compound.
l. U-Bead: J-shaped; exposed short flange does not receive joint compound.
m. Expansion (control) joint.

B. EXTERIOR TRIM
1. ASTM C 1047.
2. Material: Hot-dip galvanized steel sheet, plastic, or rolled zinc.
3. Shapes:
a. Cornerbead.
b. LC-Bead: J-shaped; exposed long flange receives joint compound.
c. Expansion (Control) Joint: One-piece, rolled zinc with V-shaped slot and removable strip covering slot opening.

2.5 JOINT TREATMENT MATERIALS

A. GENERAL
1. Comply with ASTM C 475/C 475M.

B. JOINT TAPE
1. Interior Gypsum Wallboard: Paper.
2. Exterior Gypsum Soffit Board: Paper.
3. Glass-Mat Gypsum Sheathing Board: 10-by-10 glass mesh.

C. JOINT COMPOUND FOR INTERIOR GYPSUM WALLBOARD
1. For each coat use formulation that is compatible with other compounds applied on previous or for successive coats.
2. Prefilling: At open joints, and damaged surface areas, use setting-type taping compound.
3. Embedding and First Coat: For embedding tape and first coat on joints, fasteners, and trim flanges, use drying-type, all-purpose compound.
n. Use setting-type compound for installing paper-faced metal trim accessories.
4. Fill Coat: For second coat, use drying-type, all-purpose compound.
5. Finish Coat: For third coat, use drying-type, all-purpose compound.

D. JOINT COMPOUND FOR EXTERIOR APPLICATIONS
1. Glass-Mat Gypsum Sheathing Board: As recommended by sheathing board manufacturer.

2.6 KEVLAR BALISTIC PANELS

A. GENERAL
1. Provide UL rated Level III Kevlar ballistic panels as provided by ArmorCo or equal.
2. Factory laminate prescribed layers of Kevlar material to provide specified level of ballistic protection.

B. FASTENERS
1. Use manufacturer's recommended screw fasteners for attaching directly to studs.
2. Use Polyurethane adhesives recommended by manufacturer.

2.7 AUXILIARY MAT MATERIALS

A. GENERAL
1. Provide auxiliary materials that comply with referenced installation standards and manufacturer's written recommendations.

B. LAMINATING ADHESIVE
1. Adhesive or joint compound recommended for directly adhering gypsum panels to continuous substrate.
2. Use adhesives that have a VOC content of 50 g/L or less when calculated according to 40 CFR 59, Subpart D (EPA Method 24).

C. STEEL DRILL SCREWS
1. ASTM C 1002, unless otherwise indicated.
2. Use screws complying with ASTM C 954 for fastening panels to steel members from 0.033 to 0.112 inch thick.
3. For fastening cementitious backer units, use screws of type and size recommended by panel manufacturer.

- EXECUTION

3.1 EXAMINATION

AREAS AND SUBSTRATES:
1. Examine areas and substrates, with Installer present, and including welded hollow-metal frames and framing, for compliance with requirements and other conditions affecting performance.

PRIOR TO INSTALLATION:
1. Examine panels before installation. Reject panels that are wet, moisture damaged, and mold damaged.

INSTALLATION:
1. Proceed with installation only after unsatisfactory conditions have been corrected.

3.2 APPLYING AND FINISHING PANELS, GENERAL

A. GENERAL:

1. Comply with ASTM C 840.

B. CEILING PANELS:
1. Install ceiling panels across framing to minimize the number of abutting end joints and to avoid abutting end joints in central area of each ceiling. Stagger abutting end joints of adjacent panels not less than one framing member.
2. Install panels with face side out. Butt panels together for a light contact at edges and ends with not more than 1/16 inch of open space between panels. Do not force into place.

C. JOINTS:
1. Locate edge and end joints over supports, except in ceiling applications where intermediate supports or gypsum board back-blocking is provided behind end joints. Do not place tapered edges against cut edges or ends. Stagger vertical joints on opposite sides of partitions. Do not make joints other than control joints at corners of framed openings.

CONTROL JOINTS:
1 Form control and expansion joints with space between edges of adjoining gypsum panels.

CONCEALED SPACES:
Cover both faces of support framing with gypsum panels in concealed spaces (above ceilings, etc.), except in chases braced internally
a. Unless concealed application is indicated or required for sound, fire, air, or smoke ratings, coverage may be accomplished with scraps of not less than 8 sq. ft. in area.
b. Fit gypsum panels around ducts, pipes, and conduits.
c. Where partitions intersect structural members projecting below underside of floor/roof slabs and decks, cut gypsum panels to fit profile formed by structural members; allow 1/4- to 3/8-inch- wide joints to install sealant.

ISOLATION:
1. Isolate perimeter of gypsum board applied to non-load-bearing partitions at structural abutments, except floors. Provide 1/4- to 1/2-inch- wide spaces at these locations, and trim edges with edge trim where edges of panels are exposed. Seal joints between edges and abutting structural surfaces with acoustical sealant.

ATTACHMENT TO STEEL FRAMING:
1. Attach panels so leading edge or end of each panel is attached to open (unsupported) edges of stud flanges first.

3.3 APPLYING INTERIOR GYPSUM BOARD

A. GENERAL:
Install interior gypsum board in the following locations
d. Regular Type: As indicated on Drawings.

B. SINGLE-LAYER APPLICATION:
1. On partitions/walls, apply gypsum panels horizontally (perpendicular to framing), unless otherwise indicated or required by fire-resistance-rated assembly, and minimize end joints.
a. Stagger abutting end joints not less than one framing member in alternate courses of panels.
3. On Z-furring members, apply gypsum panels vertically (parallel to framing) with no end joints. Locate edge joints over furring members.
Fastening Methods: Apply gypsum panels to supports with steel drill screws.

C. MULTILAYER APPLICATION:
1. On partitions/walls, apply gypsum board indicated for base layers and face layers vertically (parallel to framing) with joints of base layers located over stud or furring member and face-layer joints offset at least one stud or furring member with base-layer joints, unless otherwise indicated or required by fire-resistance-rated assembly. Stagger joints on opposite sides of partitions.
2. On Z-furring members, apply base layer vertically (parallel to framing) and face layer either vertically (parallel to framing) or horizontally (perpendicular to framing) with vertical joints offset at least one furring member. Locate edge joints of base layer over furring members.
3. Fastening Methods: Fasten base layers and face layers separately to supports with screws

3.4 APPLYING EXTERIOR CEMENTITIOUS PANELS FOR CEILINGS AND SOFFITS

A. GENERAL:
1. Apply panels perpendicular to supports, with end joints staggered and located over supports.
2. Install with 1/4-inch open space where panels abut other construction or structural penetrations.
3. Fasten with corrosion-resistant screws.

3.5 INSTALLING TRIM ACCESSORIES

A. GENERAL:
1. For trim with back flanges intended for fasteners, attach to framing with same fasteners used for panels. Otherwise, attach trim according to manufacturer's written instructions.

B. CONTROL JOINTS:
1. Install control joints at according to ASTM C 840 and in specific locations approved by Construction Manager for visual effect.

C. INTERIOR TRIM:
1. Install in the following locations:
a. Cornerbead: Use at outside corners.
b. LC-Bead: Use at exposed panel edges.
c. L-Bead: Use where indicated.

D. EXTERIOR TRIM:

1. Install in the following locations:
   a. Cornerbead: Use at outside corners.

3.7 FINISHING GYPSUM BOARD

A. GENERAL:
   1. Treat gypsum board joints, interior angles, edge trim, control joints, penetrations, fastener heads, surface defects, and elsewhere as required to prepare gypsum board surfaces for decoration. Promptly remove residual joint compound from adjacent surfaces.

B. JOINTS:
   1. Prefill open joints, beveled edges, and damaged surface areas.

C. TAPING JOINTS:
   1. Apply joint tape over gypsum board joints, except those with trim having flanges not intended for tape.

D. GYPSUM BOARD FINISH LEVELS
   1. Finish panels to levels indicated below and according to ASTM C 840:
      a. Level 1: Ceiling plenum areas, concealed areas, and where indicated.
      b. Level 4: At panel surfaces that will be exposed to view.
         i. Primer and its application to surfaces are specified in other Division 9 Sections.

E. CEMENTITIOUS BACKER UNITS:
   1. Finish according to manufacturer's written instructions.

3.8 APPLYING KEVLAR BALLISTIC PANELS

A. CUTTING PANELS TO SIZE
   1. Use jig saw blade or utility razor blade of type recommended by manufacturer so as not to damage material or injure operator.

B. FASTENING PANELS TO STUDS
   1. Use a core bit to drill holes in panels
   2. Cement panels to studs using Polyurethane adhesive.
   3. Screw panels to studs using manufacturer's recommended screws.
   4. Overlap joints by 4 inches.

3.9 PROTECTION

A. GENERAL:
   1. Protect installed products from damage from weather, condensation, direct sunlight, construction, and other causes during remainder of the construction period.

B. DAMAGED PANELS:
   1. Remove and replace panels that are wet, moisture damaged, and mold damaged.

2. Indications that panels are wet or moisture damaged include, but are not limited to, discoloration, sagging, or irregular shape.
3. Indications that panels are mold damaged include, but are not limited to, fuzzy or splotchy surface contamination and discoloration.

END OF SECTION 09250

SECTION 09511

ACOUSTICAL PANEL CEILINGS

GENERAL

RELATED DOCUMENTS

Drawings and general provisions of the Contract, including General and Supplementary Conditions and Division 1 Specification Sections, apply to this Section.

SUMMARY

This Section includes acoustical panels and exposed suspension systems for ceilings.

Products furnished, but not installed under this Section, include anchors, clips, and other ceiling attachment devices to be cast in concrete at ceilings.

DEFINITIONS

AC: Articulation Class.

CAC: Ceiling Attenuation Class.

LR: Light Reflectance coefficient.

NRC: Noise Reduction Coefficient.

SUBMITTALS

A. The following information shall be provided.

1. A copy of this specification section, with addendum updates included, and all referenced and applicable sections, with addendum updates included, with each paragraph check-marked to indicate specification compliance or marked to indicate requested deviations from specification requirements. Check marks (✓) shall denote full compliance with a paragraph as a whole. If deviations from the specifications are indicated, and therefore requested by the Contractor, each deviation shall be underlined and denoted by a number in the margin to the right of the identified paragraph, referenced to a detailed written explanation of the reasons for requesting the deviation. The Construction Manager shall be the final authority for determining acceptability of requested deviations. The remaining portions of the paragraph not underlined shall signify compliance on the part of the Contractor with the specifications. Failure to include a copy of the marked-up specification sections, along with justification(s) for any requested deviations to the specification requirements, with the submittal shall be sufficient cause for rejection of the entire submittal with no further consideration.

B. Product Data: For each type of product indicated.

Coordination Drawings: Reflected ceiling plans, drawn to scale, on which the following items are shown and coordinated with each other, based on input from installers of the items involved:

Ceiling suspension system members.

Method of attaching hangers to building structure.

Ceiling-mounted items including lighting fixtures, diffusers, grilles, speakers, sprinklers, access panels, and special moldings.

Minimum Drawing Scale: 1/8 inch = 1 foot.

Samples for Initial Selection: For components with factory-applied color finishes.
Samples for Verification: For each component indicated and for each exposed finish required, prepared on Samples of size indicated below.
Acoustical Panel: Set of 6-inch- square Samples of each type, color, pattern, and texture.
Exposed Suspension System Members, Moldings, and Trim: Set of 12-inch- long Samples of each type, finish, and color.
Qualification Data: For testing agency.
Product Test Reports: Based on evaluation of comprehensive tests performed by a qualified testing agency, for each acoustical panel ceiling.
Maintenance Data: For finishes to include in maintenance manuals.

QUALITY ASSURANCE
Source Limitations:
Acoustical Ceiling Panel: Obtain each type through one source from a single manufacturer.
Source Limitations: Obtain each type of acoustical ceiling panel and supporting suspension system through one source from a single manufacturer.
Fire-Test-Response Characteristics: Provide acoustical panel ceilings that comply with the following requirements:
Fire-Resistance Characteristics: Where indicated, provide acoustical panel ceilings identical to those of assemblies tested for fire resistance per ASTM E 119 by UL or another testing and inspecting agency acceptable to authorities having jurisdiction.
a. Fire-Resistance Ratings: Indicated by design designations from UL's "Fire Resistance Directory" or from the listings of another testing and inspecting agency.
b. Identify materials with appropriate markings of applicable testing and inspecting agency.
Surface-Burning Characteristics: Provide acoustical panels with the following surface-burning characteristics complying with ASTM E 1264 for Class [A] materials as determined by testing identical products per ASTM E 84:
Seismic Standard: Provide acoustical panel ceilings designed and installed to withstand the effects of earthquake motions according to the following:
Standard for Ceiling Suspension Systems Requiring Seismic Restraint: Comply with ASTM E 580.
Preinstallation Conference: Conduct conference at Project site to comply with requirements in Division 1 Section "Project Management and Coordination."

DELIVERY, STORAGE, AND HANDLING
Deliver acoustical panels, suspension system components, and accessories to Project site in original, unopened packages and store them in a fully enclosed, conditioned space where they will be protected against damage from moisture, humidity, temperature extremes, direct sunlight, surface contamination, and other causes.
Before installing acoustical panels, permit them to reach room temperature and a stabilized moisture content.
Handle acoustical panels carefully to avoid chipping edges or damaging units in any way.

PROJECT CONDITIONS

Environmental Limitations: Do not install acoustical panel ceilings until spaces are enclosed and weatherproof, wet work in spaces is complete and dry, work above ceilings is complete, and ambient temperature and humidity conditions are maintained at the levels indicated for Project when occupied for its intended use.

COORDINATION

Coordinate layout and installation of acoustical panels and suspension system with other construction that penetrates ceilings or is supported by them, including light fixtures, HVAC equipment, fire-suppression system, and partition assemblies.

EXTRA MATERIALS

Furnish extra materials described below that match products installed and that are packaged with protective covering for storage and identified with labels describing contents.

Acoustical Ceiling Panels: Full-size panels equal to 2.0 percent of quantity installed.

Suspension System Components: Quantity of each exposed component equal to 2.0 percent of quantity installed.

Hold-Down Clips: Equal to 2.0 percent of quantity installed.

PRODUCTS

ACOUSTICAL PANELS, GENERAL

Acoustical Panel Standard: Provide manufacturer's standard panels of configuration indicated that comply with ASTM E 1264 classifications as designated by types, patterns, acoustical ratings, and light reflectances, that match existing panels.

ACOUSTICAL PANELS FOR ACOUSTICAL PANEL CEILING

Basis-of-Design Product: Subject to compliance with requirements, provide panels to match existing.

Armstrong World Industries, Inc.
BPB USA.
Chicago Metallic Corporation.
Ecophon CertainTeed, Inc.
Tectum Inc.
USG Interiors, Inc.

Classification: Provide fire-resistance-rated panels complying with ASTM E 1264 for type, form, and pattern as follows:

Type and Form: Type XII, mineral base with washable finish; Form 2, nodular.
Pattern: fine textured, nondirectional.
Color: White.
LR: 0.9.
NRC: 0.95
CAC: NA
AC: 190
Edge/Joint Detail: Square.
Thickness: 1 inch.
Modular Size: 24 by 24 inches.
Antimicrobial Treatment: Inherent.

METAL SUSPENSION SYSTEMS, GENERAL

Metal Suspension System Standard: Provide manufacturer's standard direct-hung metal suspension systems of types, structural classifications, and finishes indicated that comply with applicable requirements in ASTM C 635.

Finishes and Colors, General: Comply with NAAMM's "Metal Finishes Manual for Architectural and Metal Products" for recommendations for applying and designating finishes. Provide manufacturer's standard factory-applied finish for type of system indicated.

Hold-Down Clips: Where indicated, provide manufacturer's standard hold-down clips spaced 24 inches o.c. on all cross tees.

Impact Clips: Where indicated, provide manufacturer's standard impact-clip system designed to absorb impact forces against acoustical panels.

METAL SUSPENSION SYSTEM FOR ACOUSTICAL PANEL CEILING

Utilize existing suspension system.

METAL EDGE MOLDINGS AND TRIM

Utilize existing edge molding system where possible and replace to match existing where edge molding is damaged.

EXECUTION

EXAMINATION

Examine substrates, areas, and conditions, including structural framing to which acoustical panel ceilings attach or abut, with Installer present, for compliance with requirements specified in this and other Sections that affect ceiling installation and anchorage and with requirements for installation tolerances and other conditions affecting performance of acoustical panel ceilings.

Proceed with installation only after unsatisfactory conditions have been corrected.

PREPARATION

Measure each ceiling area and establish layout of acoustical panels to balance border widths at opposite edges of each ceiling. Avoid using less-than-half-width panels at borders, and comply with layout shown on reflected ceiling plans.

INSTALLATION

General: Install acoustical panel ceilings to comply with ASTM C 636 and seismic design requirements indicated, per manufacturer's written instructions and CISCA's "Ceiling Systems Handbook."

Utilize existing ceiling hangers from building's structural members.

Install edge moldings and trim of existing type at perimeter of acoustical ceiling area and where necessary to conceal edges of acoustical panels.

Apply acoustical sealant in a continuous ribbon concealed on back of vertical legs of moldings before they are installed.

Screw attach moldings to substrate at intervals not more than 16 inches o.c. and not more than 3 inches from ends, leveling with ceiling suspension system to a tolerance of 1/8 inch in 12 feet. Miter corners accurately and connect securely.

Do not use exposed fasteners, including pop rivets, on moldings and trim.

Install acoustical panels with undamaged edges and fit accurately into suspension system runners and edge moldings. Scribe and cut panels at borders and penetrations to provide a neat, precise fit.

Arrange directionally patterned acoustical panels as follows:

c. Follow directional axis of existing ceiling panels.

For reveal-edged panels on suspension system runners, install panels with bottom of reveal in firm contact with top surface of runner flanges.

Paint cut edges of panel remaining exposed after installation; match color of exposed panel surfaces using coating recommended in writing for this purpose by acoustical panel manufacturer.

Install hold-down clips in areas indicated, in areas required by authorities having jurisdiction, and for fire-resistance ratings; space as recommended by panel manufacturer's written instructions, unless otherwise indicated.

Protect lighting fixtures and air ducts to comply with requirements indicated for fire-resistance-rated assembly.

CLEANING

Clean exposed surfaces of acoustical panel ceilings, including trim, edge moldings, and suspension system members. Comply with manufacturer's written instructions for cleaning and touchup of minor finish damage. Remove and replace ceiling components that cannot be successfully cleaned and repaired to permanently eliminate evidence of damage.

END OF SECTION 09511

SECTION 09620

RESILIENT LINOLEUM FLOORING

PART 1 GENERAL

1.1 Description of Work
- A. This specification covers the furnishing and installation of materials for linoleum floor covering. Products shall be as follows or as directed by the Owner. Installation procedures shall be in accordance with the product manufacturer's recommendations. Demolition and removal of materials shall be as required to support the work.

1.2 Summary
- A. Section Includes:
  1. Resilient Linoleum Tile Flooring.
  2. Resilient Linoleum water cut County Seal

1.3 Submittals
- A. The following information shall be provided.
  1. A copy of this specification section, with addendum updates included, and all referenced and applicable sections, with addendum updates included, with each paragraph check-marked to indicate specification compliance or marked to indicate requested deviations from specification requirements. Check marks (✓) shall denote full compliance with a paragraph as a whole. If deviations from the specifications are indicated, and therefore requested by the Contractor, each deviation shall be underlined and denoted by a number in the margin to the right of the identified paragraph, referenced to a detailed written explanation of the reasons for requesting the deviation. The Construction Manager shall be the final authority for determining acceptability of requested deviations. The remaining portions of the paragraph not underlined shall signify compliance on the part of the Contractor with the specifications. Failure to include a copy of the marked-up specification sections, along with justification(s) for any requested deviations to the specification requirements, with the submittal shall be sufficient cause for rejection of the entire submittal with no further consideration.

1.4 Product Data: For each type of product indicated.
- A. Submittals:
  1. Product Data: For adhesives, sealants and chemical-bonding compounds, including printed statement of VOC content.
- B. Shop Drawings: For each type of flooring. Include floor layouts, seams, edges, columns, doorways, enclosing partitions, built-in furniture, cabinets, and cutouts.
  1. Show details of special patterns.
- C. Samples: 6"x9" samples of each type, color and pattern of flooring required.
- D. Seam Samples: For seamless-installation technique indicated and for each flooring product, color, and pattern required; with seam running lengthwise and in center of 6-by-9-inch (150-by-230-mm) Sample applied to a rigid backing and prepared by Installer for this Project.

E. Maintenance and operations data, including methods for maintaining installed products and precautions against cleaning materials detrimental to finishes and performance.

1.5 Quality Assurance

A. Fire-Test-Response Characteristics: As determined by testing identical products according to ASTM E 648 or NFPA 253 by a qualified testing agency.

a. Critical Radiant Flux Classification: Class I, not less than 0.45 W/sq. cm.

1.6 Delivery, Storage, and Handling

A. Store flooring and installation materials in dry spaces protected from the weather, with ambient temperatures maintained within range recommended by manufacturer, but not less than 50 deg F (10 deg C) or more than 90 deg F (32 deg C).

1.7 Project Conditions

A. Maintain ambient temperatures within range recommended by manufacturer, but not less than 70 deg F (21 deg C) or more than 95 deg F (35 deg C), in spaces to receive flooring during the following time periods:

1. 48 hours before installation.
2. During installation.
3. 48 hours after installation.

B. Until Substantial Completion, maintain ambient temperatures within range recommended by manufacturer, but not less than 55 deg F (13 deg C) or more than 95 deg F (35 deg C).

C. The relative humidity measured from the center of the concrete slab should not exceed 75%. If test results exceed the limitations, the installation must not proceed until the problem has been corrected.

D. Close spaces to traffic during flooring installation.

E. Close spaces to traffic for 48 hours after flooring installation.

F. Install flooring after other finishing operations, including painting, have been completed.

1.8 Warranty

A. Manufacturer's Warranty: Submit manufacturer's standard warranty document.

B. Warranty Period: Five (5) year limited warranty commencing on Date of Substantial completion.

PART 2 PRODUCTS

2.1 Linoleum Tile Flooring: To establish a standard of quality, design and performance, Forbo Flooring Systems' Marmoleum with "Top Shield" is the design standard. Subject to compliance with requirements, manufacturers offering products that conform to the following standards may be incorporated into the Work.

A. Thickness: 0.10 inch

B. Meets or exceeds ASTM F2034 for Linoleum tile Flooring, Static Load Limit 450 pounds per square inch.

C. Homogeneous linoleum floor covering shall be made of linseed oil, wood fiber, rosin binders and dry pigments mixed and calendared using a two-layered process, onto a jute backing.

D. Colors and patterns shall be as selected by Architect. Patterns shall be defined in any given area, applied in stripes, diagonals, checkerboard pattern and other designs as determined by the Architect. All selections shall be made from manufacturer's full product lines (including premium colors).

2.2 Installation Materials

A. Trowelable Leveling and Patching Compounds: Latex-modified, Portland cement based or blended hydraulic-cement-based formulation provided or approved by manufacturer for applications indicated.

B. Adhesives: Water-resistant type recommended by manufacturer to suit floor tile and substrate conditions indicated.
   1. Fully warranted, to withstand concrete moisture vapor emissions up to 5 pounds per 1,000 sq. ft. in 24 hours and meets or exceed the VOC limits of South Coast Air Quality Management District Rule #1168.

C. Heat Welding: Use Manufacturers recommended heat-welding thread.

D. Wall Base: Provide rubber will base complying with FS SS-W-40, Type I.

E. Maintenance Products: As recommended by Linoleum Manufacturer.

PART 3 EXECUTION

3.1 Inspection:

A. Installer must examine areas and conditions under which resilient flooring and accessories are to be installed and must notify General Contractor in writing of conditions detrimental to proper and timely completion of work. Do not proceed with work until unsatisfactory conditions have been corrected in manner acceptable to Owner and Architect.

B. Preparation:
   1. Prepare substrates according to manufacturer's written instructions to ensure adhesion of resilient products.
   2. Concrete Substrates: Prepare according to ASTM F 710.
      a. Verify that substrates are dry and free of curing compounds, sealers, and hardeners.
      b. Remove substrate coatings and other substances that are incompatible with adhesives and that contain soap, wax, oil, or silicone, using mechanical methods recommended by manufacturer. Do not use solvents.
      c. Alkalinity and Adhesion Testing: Perform tests recommended by manufacturer. Proceed with installation only after substrates pass testing.
      d. Moisture Testing: Perform tests recommended by manufacturer and as follows. Proceed with installation only after substrates pass testing.
         1) Perform anhydrous calcium chloride test, ASTM F 1869. Proceed with installation only after substrates have

maximum moisture-vapor-emission rate of 5 lb of water/1000 sq. ft. in 24 hours.

2) Perform relative humidity test using in situ probes, ASTM F 2170. Proceed with installation only after substrates have a maximum 75% relative humidity level measurement.

e. Fill cracks, holes, and depressions in substrates with trowelable leveling and patching compound and remove bumps and ridges to produce a uniform and smooth substrate.

f. Do not install flooring until it is the same temperature as space where it is to be installed.

1) Move resilient products and installation materials into spaces where they will be installed at least 48 hours in advance of installation.

g. Sweep and vacuum clean substrates to be covered by resilient products immediately before installation.

C. Adhesive Flooring Installation:

1. Install Flooring material following manufacturer's installation recommendations.
2. Linoleum Sheet: Apply adhesive using 1/16" x 1/16" x 1/16" square notch trowel and lay flooring into wet adhesive and roll with a 100 pound roller to ensure proper bonding,
3. Adhesive Material Installation: Use trowel as recommended by flooring manufacturer for specific adhesive. Spread at a rate of approximately 150 sq. ft/gallon as recommended by flooring manufacturer.
4. Scribe, cut, and fit flooring to butt neatly and tightly to vertical surfaces and permanent fixtures including built-in furniture, cabinets, pipes, outlets, and door frames.
5. Extend flooring into toe spaces, door reveals, closets, and similar openings. Extend floor tiles to center of door openings.
6. Adhere resilient flooring to substrate without producing open cracks, voids, raising and puckering at joints, telegraphing to adhesive spreader marks, or other surface imperfections in completed installation
   a. Use adhesive applied to substrate in compliance with flooring manufacturer's recommendations, including those for trowel notching, adhesive mixing and adhesive open and working times.
7. Roll resilient flooring using 100lbs roller as required by resilient flooring manufacturer.
8. Heat weld joints of tiles surrounding the seal

D. Finish Flooring Patterns: As selected and detailed by Architect.

E. Cleaning and Protection

1. Comply with manufacturer's written instructions for cleaning and protection of floor tile.
2. Perform the following operations immediately after completing floor tile installation:
   a. Remove adhesive and other blemishes from exposed surfaces.
   b. Sweep and vacuum surfaces thoroughly.
   c. Damp-mop surfaces to remove marks and soil.

3. Protect floor tile products from mars, marks, indentations, and other damage from construction operations and placement of equipment and fixtures during remainder of construction period.

END OF SECTION 09620

Copyright 1998, The American Institute of Architects (AIA)

SECTION 09680

CARPET

This Section uses the term "Architect." Change this term to match that used to identify the design professional as defined in the General and Supplementary Conditions.

Verify that Section titles referenced in this Section are correct for this Project's Specifications; Section titles may have changed.

PART 1. - GENERAL

1.1 SUMMARY

A. This Section includes the following:

Revise subparagraph below if fusion-bonded or needle-punched carpet is required.

1. Tufted carpet tiles and installation.

1.2 SUBMITTALS

A. The following information shall be provided.

1. A copy of this specification section, with addendum updates included, and all referenced and applicable sections, with addendum updates included, with each paragraph check-marked to indicate specification compliance or marked to indicate requested deviations from specification requirements. Check marks (✓) shall denote full compliance with a paragraph as a whole. If deviations from the specifications are indicated, and therefore requested by the Contractor, each deviation shall be underlined and denoted by a number in the margin to the right of the identified paragraph, referenced to a detailed written explanation of the reasons for requesting the deviation. The Construction Manager shall be the final authority for determining acceptability of requested deviations. The remaining portions of the paragraph not underlined shall signify compliance on the part of the Contractor with the specifications. Failure to include a copy of the marked-up specification sections, along with justification(s) for any requested deviations to the specification requirements, with the submittal shall be sufficient cause for rejection of the entire submittal with no further consideration.

1.3 PRODUCT DATA:

A. For each type of product indicated. Include manufacturer's written data on physical characteristics, durability, and fade resistance. Include installation recommendations for each type of substrate required. Should carpet manufacturer not publish detailed installation data, installer shall submit detailed proposed procedures for Architect's approval.

B. Shop Drawings: Indicate the following.

1. Locations where cutouts are required in carpet, i.e. columns, doorways, built-in cabinets, etc.

2. Starting point for carpet tile pattern repeat.
3. Type, color, and location of inserts and borders (if any).
4. Type, location, and location of edge, transition, and other accessory strips required.
5. Transition details to other flooring materials.
6. Use same room and product designations indicated on Drawings and in schedules.

C. Samples: For each of the following products and for each color and texture required. Label each Sample with manufacturer's name, material description, color, pattern, and designation indicated on Drawings.
1. Carpet Tile: Two (2), full-size carpet tiles of each different color and pattern.
2. Submit all exposed edge stripping and accessories with carpet sample submittal.

D. Maintenance Data: For carpet to include in maintenance manuals include the following:
1. Methods for maintaining carpet, including cleaning and stain-removal products and procedures and manufacturer's recommended maintenance schedule.
2. Precautions for cleaning materials and methods that could be detrimental to carpet.

E. Certificates: Carpet shall be certified for compliance with specification requirements. Submit certificates from carpet manufacturer at time of carpet delivery to project site. Each certificate shall be signed by authorized officer of carpet manufacturing company and shall contain the name and address of the Contractor, the project location and the quantities and date or dates of shipment or delivery to which certificates apply.

1.4 QUALITY ASSURANCE

A. Applicable Standards: Standards of the following, as referenced herein:
1. American Association of Textile Chemists and Colorists (AATCC).
2. American Society for Testing and Materials (ASTM).
3. National Fire Protection Association (NFPA).

B. Design Criteria: Carpet shall meet the following as determined by testing identical products by an independent testing and inspecting agency acceptable to the Architect:
1. Refer to the GSFIC specimen language for Testing of Carpet at the end of PART 3.
2. Flame spread, fuel contribution and smoke development: Class B when tested in accord with ASTM E84 and NFPA 101.
3. Critical radiant flux: Class I, when tested in accord with ASTM E648.
4. Optical density of smoke (flaming): Not more than 250 per ASTM E662-97.
5. Electrostatic propensity: No greater than 3.0 when tested in per AATCC 134-1991.
6. Colorfastness to Crocking: Not less than 4, wet and dry, per AATCC-165.
7. Colorfastness to Light: Not less than 4 after 40 AFU (AATCC fading units) per ATCC-16.
8. Flammability of carpet: Pass methenamine pill test when tested in accord with ASTM D2859.

9. Carpet systems shall meet or exceed the Carpet and Rug Institute's Green Label Indoor Air Quality Test Program.

C. Installer Qualifications:
1. Installer shall provide written documentation from the carpet manufacturer that they are certified to install products indicated.
2. Installer shall be certified by the Floor Covering Installation Board or can demonstrate compliance with its certification program requirements.

Delete paragraph below if none of the products listed in Part 2 are required to have a critical radiant flux classification. Revise if authorities having jurisdiction require other fire tests.

Retain paragraph below if products and manufacturers are named in Part 2 solely to serve as the basis for selecting comparable products. See "Specifying Methods" Article in the Evaluations.

1.5 DELIVERY, STORAGE, AND HANDLING

A. Deliver materials in manufacturer's original mill wrappings, with carpet having register tag number attached. Deliver only after building is enclosed and spaces have controlled temperature and humidity.

B. Store materials under cover, off floor, in ventilated space. Protect from damage, staining and moisture. Stand no roll material on end.

1.6 PROJECT CONDITIONS

A. General: Comply with CRI 104, Section 6.1, "Site Conditions; Temperature and Humidity."

B. Environmental Limitations: Do not install carpet until wet work in spaces is complete and dry, and ambient temperature and humidity conditions are maintained at the levels indicated for Project when occupied for its intended use.

Delete paragraph below if products are not adhesively applied to concrete substrates. Revise to suit Project.

C. Do not install carpet over concrete slabs until slabs have cured and are sufficiently dry to bond with adhesive and concrete slabs have pH range recommended by carpet manufacturer.

D. Where furniture or other items are indicated for installation on top of carpet, install carpet before installing these items.

1.7 EXTRA MATERIALS

Extra materials may not be allowed for publicly funded projects.

A. Furnish extra materials described below, before installation begins, that match products installed and that are packaged with protective covering for storage and identified with labels describing contents.

Revise below to suit Project. Replace percentage with a specific number of square yards (square meters).

B. Carpet Tile: Equal to 5-percent of amount installed or one (1) whichever is greater.

PART 2. - PRODUCTS

Before editing Part 2, see "Specifying Methods" Article and sample of completed Part 2 in the Evaluations. See Editing Instruction No. 1 in the Evaluations for an explanation of the insert notes in article titles below.

2.1 CARPET TILE

A. Colors, Textures, and Patterns:

Retain one requirement from options in subparagraph below. If retaining first option, indicate colors, textures, and patterns on Drawings or by inserts into Part 2 "Tile Products," "Thresholds," and "Setting and Grouting Materials" articles or Part 3 tile installation schedules. See Editing Instruction No. 3 in the Evaluations.

1. Refer to Finish Schedule and Finish Legend located on the Drawings for selections and installation locations.
2. Refer to Drawing 4.1 Materials for Carpet Sample
3. Basis of Owner approved Design:
   a. Bently Prince Street
   b. Collection: Easy Street
   c. Style Name: Lake Street
   d. Style #: 4LR220ABOT
   e. Color: Failing to Obey 400956
   f. Fabric: Solution Dyed Nylon

Revise paragraph below to suit Project.

Insert other performance characteristics, such as static resistance, to suit Project.

2.2 INSTALLATION ACCESSORIES

Revise paragraph below to suit Project.

A. Trowelable Leveling and Patching Compounds: Latex-modified, hydraulic-cement-based formulation provided by or recommended by the carpet manufacturer.

B. Adhesives: Water-resistant, mildew-resistant, non-staining type to suit products and subfloor conditions indicated, that complies with flammability requirements for installed carpet and that is recommended by the carpet manufacturer. Adhesive shall be release type, allow removal of carpet without damage to carpet or substrate.

C. Leveling Compound
   1. Acceptable Products
      a. Euclid EUCO Polypatch
      b. Flintkote Latex Underlayment
      c. GAF Leveling and Patching Compound
      d. TAMMS Floorstone with Latex Liquid

D. Carpet edge strip shall be resilient base type.

PART 3 - EXECUTION

3.1 EXAMINATION

A. Examine substrates, areas, and conditions for compliance with requirements for maximum moisture content, alkalinity range, installation tolerances, and other conditions affecting carpet performance. Verify that substrates and conditions are satisfactory for carpet installation and comply with requirements specified.

Retain paragraph and subparagraphs below if products are adhesively attached to concrete subfloors.

B. Concrete Subfloors: Verify that concrete slabs comply with ASTM F 710 and the following:

Revise subparagraph below to suit Project.

C. Slab substrates are dry and free of curing compounds, sealers, hardeners, and other materials that may interfere with adhesive bond. Determine adhesion and dryness characteristics by performing bond and moisture tests recommended by the carpet manufacturer.

D. Subfloor finishes comply with requirements specified in Division 3 Section Cast-in-Place Concrete for slabs receiving carpet.

E. Subfloors are free of cracks, ridges, depressions, scale, and foreign deposits.

F. Proceed with installation only after unsatisfactory conditions have been corrected.

3.2 PREPARATION

A. General: Comply with CRI 104, Section 6.2, "Site Conditions; Floor Preparation," and carpet manufacturer's written installation instructions for preparing substrates indicated to receive carpet installation.

B. Use trowelable leveling and patching compounds, according to manufacturer's written instructions, to fill cracks, holes, and depressions in substrates.

Retain paragraph below if products are adhesively attached to concrete substrates.

C. Remove coatings, including curing compounds, and other substances that are incompatible with adhesives and that contain soap, wax, oil, or silicone, without using solvents. Use mechanical methods recommended in writing by the carpet manufacturer.

D. Broom and vacuum clean substrates to be covered immediately before installing carpet. After cleaning, examine substrates for moisture, alkaline salts, carbonation, or dust. Proceed with installation only after unsatisfactory conditions have been corrected.

3.3. WORKMANSHIP

A. Maintain edges and seams straight and square with adjacent surfaces.

3.4. INSTALLATION, GENERAL

A. Comply with carpet manufacturer's written recommendations for seam locations and direction of carpet; maintain uniformity of carpet direction and lay of pile. At doorways, center seams under the door in closed position.

Retain one of two subparagraphs below for seamed border installation.

B. Lay out carpeting materials in accord with approved shop drawings.

C. Cut and fit carpet to butt tightly to vertical surfaces, permanent fixtures, and built-in furniture including cabinets, pipes, outlets, edgings, thresholds, and nosings. Bind or seal cut edges as recommended by carpet manufacturer.

D. Extend carpet into toe spaces, door reveals, closets, open-bottomed obstructions, removable flanges, alcoves, and similar openings.
E. Maintain reference markers, holes, and openings that are in place or marked for future cutting by repeating on finish flooring as marked on subfloor. Use nonpermanent, nonstaining marking device.
F. Install pattern, where applicable, parallel to wall and borders.
G. Direct-Glue-Down Installation: Comply with CRI 104, Section 8, "Direct Glue-Down Installation."

3.5. CLEANING AND PROTECTION

A. Perform the following operations immediately after installing carpet:
B. Remove excess adhesive, seam sealer, and other surface blemishes and stains using cleaner recommended by carpet manufacturer.
C. Remove yarns that protrude from carpet surface.
D. Thoroughly vacuum carpet using commercial machine with face-beater element.
E. Protect carpet against damage from construction operations and placement of equipment and fixtures during the remainder of construction period. Use protection methods indicated or recommended in writing by carpet manufacturer.
F. Just prior to Date of Substantial Completion, remove protective covering and vacuum carpet. Steam clean areas if required to remove stains.
G. Remove and replace carpet tiles which cannot be cleaned.

END OF SECTION

SECTION 09912

INTERIOR PAINTING

PART 1 - GENERAL

1.1 DESCRIPTION

A. This Section specifies surface preparation and the application of paint systems on the following interior substrates:
   1. Steel.
   2. Galvanized metal.
   3. Wood.
   4. Gypsum board

1.2 RELATED DOCUMENTS

A. Drawings and general provisions of the Contract, including General and Supplementary and Division 1 Specification Sections, apply to this Section.

1.3 SUBMITTALS

A. The following information shall be provided.
   1. A copy of this specification section, with addendum updates included, and all referenced and applicable sections, with addendum updates included, with each paragraph check-marked to indicate specification compliance or marked to indicate requested deviations from specification requirements. Check marks (✓) shall denote full compliance with a paragraph as a whole. If deviations from the specifications are indicated, and therefore requested by the Contractor, each deviation shall be underlined and denoted by a number in the margin to the right of the identified paragraph, referenced to a detailed written explanation of the reasons for requesting the deviation. The Construction Manager shall be the final authority for determining acceptability of requested deviations. The remaining portions of the paragraph not underlined shall signify compliance on the part of the Contractor with the specifications. Failure to include a copy of the marked-up specification sections, along with justification(s) for any requested deviations to the specification requirements, with the submittal shall be sufficient cause for rejection of the entire submittal with no further consideration.

1.4 PRODUCT DATA:

A. For each type of product indicated.

1.5 SAMPLES FOR INITIAL SELECTION:

A. For each type of topcoat product indicated.

1.6 SAMPLES FOR VERIFICATION:

A. For each type of paint system and in each color and gloss of topcoat indicated.
   1. Submit Samples on rigid backing, 8 inches square.
   2. Step coats on Samples to show each coat required for system.
   3. Label each coat of each Sample.
   4. Label each Sample for location and application area.

1.7 PRODUCT LIST:

A. For each product indicated, include the following:
   1. Cross-reference to paint system and locations of application areas. Use same designations indicated on Drawings and in schedules.
   2. Printout of current "MPI Approved Products List" for each product category specified in Part 2, with the proposed product highlighted.
   3. Product Data for Credit EQ 4.2: For paints, including printed statement of VOC content and chemical components.

1.8 QUALITY ASSURANCE

A. MPI Standards:
   1. Products: Complying with MPI standards indicated and listed in "MPI Approved Products List."
   2. Preparation and Workmanship: Comply with requirements in "MPI Architectural Painting Specification Manual" for products and paint systems indicated.

1.9 MOCKUPS:

A. Apply benchmark samples of each paint system indicated and each color and finish selected to verify preliminary selections made under sample submittals and to demonstrate aesthetic effects and set quality standards for materials and execution.
B. Final approval of color selections will be based on benchmark samples.
C. If preliminary color selections are not approved, apply additional benchmark samples of additional colors selected by Construction Manager at no added cost to Owner.

1.10 DELIVERY, STORAGE, AND HANDLING

A. Store materials not in use in tightly covered containers in well-ventilated areas with ambient temperatures continuously maintained at not less than 45 deg F.
B. Maintain containers in clean condition, free of foreign materials and residue.
C. Remove rags and waste from storage areas daily.

1.11 PROJECT CONDITIONS

A. Apply paints only when temperature of surfaces to be painted and ambient air temperatures are between 50 and 95 deg F.
B. Do not apply paints when relative humidity exceeds 85 percent; at temperatures less than 5 deg F above the dew point; or to damp or wet surfaces.

1.12 EXTRA MATERIALS

A. Furnish extra materials described below that are from same production run (batch mix) as materials applied and that are packaged for storage and identified with labels describing contents.
B. Quantity: Furnish an additional 5 percent, but not less than 1 gal. of each material and color applied.

PART 2 - PRODUCTS

2.1 MANUFACTURERS

A. AVAILABLE MANUFACTURERS:

1. Subject to compliance with requirements, manufacturers offering products that may be incorporated into the Work include, but are not limited to, the following:
   a. Benjamin Moore & Co.
   b. Duron, Inc.
   c. Envirocoat Technologies Inc.
   d. ICI Paints.
   e. Parker Paint Mfg. Co. Inc.
   f. Porter Paints.
   g. PPG Architectural Finishes, Inc.
   h. Sherwin-Williams Company (The).

2.2 PAINT, GENERAL

A. MATERIAL COMPATIBILITY:

1. Provide materials for use within each paint system that are compatible with one another and substrates indicated, under conditions of service and application as demonstrated by manufacturer, based on testing and field experience.
2. For each coat in a paint system, provide products recommended in writing by manufacturers of topcoat for use in paint system and on substrate indicated.

B. VOC CONTENT OF FIELD-APPLIED INTERIOR PAINTS AND COATINGS:

1. Provide products that comply with the following limits for VOC content, exclusive of colorants added to a tint base, when calculated according to 40 CFR 59, Subpart D (EPA Method 24); these requirements do not apply to paints and coatings that are applied in a fabrication or finishing shop:
   a. Flat Paints, Coatings, and Primers: VOC content of not more than 50 g/L.
   b. Nonflat Paints, Coatings, and Primers: VOC content of not more than 150 g/L.
   c. Anti-Corrosive and Anti-Rust Paints Applied to Ferrous Metals: VOC not more than 250 g/L.
   d. Floor Coatings: VOC not more than 100 g/L.
   e. Shellacs, Clear: VOC not more than 730 g/L.
   f. Shellacs, Pigmented: VOC not more than 550 g/L.
   g. Flat Topcoat Paints: VOC content of not more than 50 g/L.
   h. Nonflat Topcoat Paints: VOC content of not more than 150 g/L.
   i. Anti-Corrosive and Anti-Rust Paints Applied to Ferrous Metals: VOC not more than 250 g/L.
   j. Floor Coatings: VOC not more than 100 g/L.
   k. Shellacs, Clear: VOC not more than 730 g/L.
   l. Shellacs, Pigmented: VOC not more than 550 g/L.
   m. Primers, Sealers, and Undercoaters: VOC content of not more than 200 g/L.
   n. Dry-Fog Coatings: VOC content of not more than 400 g/L.

o. Zinc-Rich Industrial Maintenance Primers: VOC content of not more than 340 g/L.
p. Pre-Treatment Wash Primers: VOC content of not more than 420 g/L.

C. CHEMICAL COMPONENTS OF FIELD-APPLIED INTERIOR PAINTS AND COATINGS:
1. Provide topcoat paints and anti-corrosive and anti-rust paints applied to ferrous metals that comply with the following chemical restrictions; these requirements do not apply to paints and coatings that are applied in a fabrication or finishing shop:
2. Aromatic Compounds: Paints and coatings shall not contain more than 1.0 percent by weight of total aromatic compounds (hydrocarbon compounds containing one or more benzene rings).
3. Restricted Components: Paints and coatings shall not contain any of the following:
a. Acrolein.
b. Acrylonitrile.
c. Antimony.
e. Benzene.
f. Butyl benzyl phthalate.
g. Cadmium.
h. Di (2-ethylhexyl) phthalate.
i. Di-n-butyl phthalate.
j. Di-n-octyl phthalate.
k. 1,2-dichlorobenzene.
l. Diethyl phthalate.
m. Dimethyl phthalate.
n. Ethylbenzene.
o. Formaldehyde.
p. Hexavalent chromium.
q. Isophorone.
r. Lead.
s. Mercury.
t. Methyl ethyl ketone.
u. Methyl isobutyl ketone.
v. Methylene chloride.
w. Naphthalene.
x. Toluene (methylbenzene).
y. 1,1,1-trichloroethane.
z. Vinyl chloride.

D. COLORS:
1. To match existing except as indicated otherwise on drawings

2.3 BLOCK FILLERS
A. INTERIOR/EXTERIOR LATEX BLOCK FILLER: MPI #4.
1. VOC Content: E Range of E3.

2.4 PRIMERS/SEALERS
A. INTERIOR LATEX PRIMER/SEALER: MPI #50.
1. VOC Content: E Range of E3.

2. Environmental Performance Rating: EPR 3.

B. INTERIOR ALKYD PRIMER/SEALER: MPI #45.
1. VOC Content: E Range of E2.

C. WOOD-KNOT SEALER:
1. Sealer recommended in writing by topcoat manufacturer for use in paint systems indicated.

2.5 METAL PRIMERS

A. ALKYD ANTICORROSIVE METAL PRIMER: MPI #79.
1. VOC Content: E Range of E2.

B. QUICK-DRYING ALKYD METAL PRIMER: MPI #76.
1. VOC Content: E Range of E3.

C. RUST-INHIBITIVE PRIMER (WATER BASED): MPI #107.
1. VOC Content: E Range of E3.
2. Environmental Performance Rating: EPR 3.

D. CEMENTITIOUS GALVANIZED-METAL PRIMER: MPI #26.
1. VOC Content: E Range of E1.

E. WATERBORNE GALVANIZED-METAL PRIMER: MPI #134.
1. VOC Content: E Range of E3.
2. Environmental Performance Rating: EPR 3.

F. VINYL WASH PRIMER: MPI #80.
1. VOC Content: E Range of E3.

G. QUICK-DRYING PRIMER FOR ALUMINUM: MPI #95.
1. VOC Content: E Range of E3.

2.6 WOOD PRIMERS

A. INTERIOR LATEX-BASED WOOD PRIMER: MPI #39.
1. VOC Content: E Range of E3.
2. Environmental Performance Rating: EPR 3.

2.7 LATEX PAINTS

A. INTERIOR LATEX (EGGSHELL): MPI #52 (GLOSS LEVEL 3).
1. VOC Content: E Range of E3.
2. Environmental Performance Rating: EPR 3.

B. INTERIOR LATEX (SEMIGLOSS): MPI #54 (GLOSS LEVEL 5).
1. VOC Content: E Range of E3.
2. Environmental Performance Rating: EPR 4.
3. Environmental Performance Rating: EPR 4.5.

2.8 QUICK-DRYING ENAMELS

A. QUICK-DRYING ENAMEL (SEMIGLOSS): MPI #81 (GLOSS LEVEL 5).
1. VOC Content: E Range of E3.

2.9 FLOOR COATINGS

A. INTERIOR CONCRETE FLOOR STAIN: MPI #58.
1. VOC Content: E Range of E3.
2. Environmental Performance Rating: EPR 2.

B. INTERIOR/EXTERIOR CLEAR CONCRETE FLOOR SEALER (WATER BASED): MPI #99.
1. VOC Content: E Range of E3.

C. INTERIOR/EXTERIOR CLEAR CONCRETE FLOOR SEALER (SOLVENT BASED): MPI #104.
1. VOC Content: E Range of E2.

PART 3 - EXECUTION

3.1 EXAMINATION

A. GENERAL:
1. Examine substrates and conditions, with Applicator present, for compliance with requirements for maximum moisture content and other conditions affecting performance of work.

B. MAXIMUM MOISTURE CONTENT OF SUBSTRATES:
1. When measured with an electronic moisture meter as follows:
   a. Concrete: 12 percent.
   b. Masonry (Clay and CMU): 12 percent.
   c. Wood: 15 percent.
   d. Gypsum Board: 12 percent.

C. SUBSTRATE CONDITION:
1. Verify suitability of substrates, including surface conditions and compatibility with existing finishes and primers.
2. Begin coating application only after unsatisfactory conditions have been corrected and surfaces are dry.
3. Beginning coating application constitutes Contractor's acceptance of substrates and conditions.

3.2 PREPARATION

A. GENERAL:
1. Comply with manufacturer's written instructions and recommendations in "MPI Architectural Painting Specification Manual" applicable to substrates indicated.
2. Remove plates, machined surfaces, and similar items already in place that are not to be painted. If removal is impractical or impossible because of size or weight of item, provide surface-applied protection before surface preparation and painting.
3. Clean substrates of substances that could impair bond of paints, including dirt, oil, grease, and incompatible paints and encapsulants.
4. After completing painting operations, use workers skilled in the trades involved to reinstall items that were removed. Remove surface-applied protection if any.
5. Do not paint over labels of independent testing agencies or equipment name, identification, performance rating, or nomenclature plates.
6. Remove incompatible primers and reprime substrate with compatible primers as required to produce paint systems indicated.

B. CONCRETE SUBSTRATES:

1. Remove release agents, curing compounds, efflorescence, and chalk. Do not paint surfaces if moisture content or alkalinity of surfaces to be painted exceeds that permitted in manufacturer's written instructions.

C. CONCRETE MASONRY SUBSTRATES:
1. Remove efflorescence and chalk. Do not paint surfaces if moisture content or alkalinity of surfaces to be painted exceeds that permitted in manufacturer's written instructions.

D. STEEL SUBSTRATES:
1. Remove rust and loose mill scale. Clean using methods recommended in writing by paint manufacturer.

E. GALVANIZED-METAL SUBSTRATES:
1. Remove grease and oil residue from galvanized sheet metal fabricated from coil stock by mechanical methods to produce clean, lightly etched surfaces that promote adhesion of subsequently applied paints.

F. ALUMINUM SUBSTRATES:
1. Remove surface oxidation.

G. WOOD SUBSTRATES:
1. Scrape and clean knots, and apply coat of knot sealer before applying primer.
2. Sand surfaces that will be exposed to view, and dust off.
3. Prime edges, ends, faces, undersides, and backsides of wood.
4. After priming, fill holes and imperfections in the finish surfaces with putty or plastic wood filler. Sand smooth when dried.

H. GYPSUM BOARD SUBSTRATES:
1. Do not begin paint application until finishing compound is dry and sanded smooth.

3.3 APPLICATION

A. GENERAL:
1. Apply paints according to manufacturer's written instructions.
2. Use applicators and techniques suited for paint and substrate indicated.
3. Paint surfaces behind movable equipment and furniture same as similar exposed surfaces. Before final installation, paint surfaces behind permanently fixed equipment or furniture with prime coat only.
4. Paint front and backsides of access panels, removable or hinged covers, and similar hinged items to match exposed surfaces.
5. If undercoats or other conditions show through topcoat, apply additional coats until cured film has a uniform paint finish, color, and appearance.
6. Apply paints to produce surface films without cloudiness, spotting, holidays, laps, brush marks, roller tracking, runs, sags, ropiness, or other surface imperfections. Cut in sharp lines and color breaks.

B. PAINTING MECHANICAL AND ELECTRICAL WORK:
1. Paint items exposed in equipment rooms and occupied spaces including, but not limited to, the following:
   a. Mechanical Work:
      i. Uninsulated metal piping.
      j. Uninsulated plastic piping.
      k. Pipe hangers and supports.
      l. Tanks that do not have factory-applied final finishes.

m. Visible portions of internal surfaces of metal ducts, without liner, behind air inlets and outlets.
n. Duct, equipment, and pipe insulation having cotton or canvas insulation covering or other paintable jacket material.
o. Mechanical equipment that is indicated to have a factory-primed finish for field painting.

2. Electrical Work:
   a Panelboards.
   b. Electrical equipment that is indicated to have a factory-primed finish for field painting.

3.4 CLEANING AND PROTECTION

A. At end of each workday, remove rubbish, empty cans, rags, and other discarded materials from Project site.
B. After completing paint application, clean spattered surfaces. Remove spattered paints by washing, scraping, or other methods. Do not scratch or damage adjacent finished surfaces.
C. Protect work of other trades against damage from paint application. Correct damage to work of other trades by cleaning, repairing, replacing, and refinishing, as approved by Construction Manager, and leave in an undamaged condition.
D. At completion of construction activities of other trades, touch up and restore damaged or defaced painted surfaces.

3.5 INTERIOR PAINTING SCHEDULE

A. CONCRETE SUBSTRATES, NONTRAFFIC SURFACES:
   1. Institutional Low-Odor/VOC Latex System: MPI INT 3.1M.
      a. Prime Coat: Institutional low-odor/VOC interior latex matching topcoat.
      b. Intermediate Coat: Institutional low-odor/VOC interior latex matching topcoat.
      c. Topcoat: Institutional low-odor/VOC interior latex (semigloss).
B. CONCRETE SUBSTRATES, TRAFFIC SURFACES:
   1. Alkyd Floor Enamel System: MPI INT 3.2B.
      a. Prime Coat: Exterior/interior alkyd floor enamel (semigloss).
      b. Intermediate Coat: Exterior/interior alkyd floor enamel (semigloss).
      c. Topcoat: Exterior/interior alkyd floor enamel (semigloss).
C. CMU SUBSTRATES:
   1. Latex System: MPI INT 4.2A.
      a. Prime Coat: Interior/exterior latex block filler.
      b. Intermediate Coat: Interior latex matching topcoat.
      c. Topcoat: Interior latex (semigloss).
D. STEEL SUBSTRATES:
   1. Latex Over Alkyd Primer System: MPI INT 5.1Q.
      a. Prime Coat: Alkyd anticorrosive metal primer.
      b. Intermediate Coat: Interior latex matching topcoat.
      c. Topcoat: Interior latex (eggshell).
E. GALVANIZED-METAL SUBSTRATES:
   1. Latex System: MPI INT 5.3A.
      a. Prime Coat: Cementitious galvanized-metal primer.

b. Intermediate Coat: Interior latex matching topcoat.
c. Topcoat: Interior latex (eggshell).

F. ALUMINUM (NOT ANODIZED OR OTHERWISE COATED) SUBSTRATES:
1. Latex System: MPI INT 5.4H.
a. Prime Coat: Quick-drying primer for aluminum.
b. Intermediate Coat: Interior latex matching topcoat.
c. Topcoat: Interior latex (eggshell).

G. GYPSUM BOARD SUBSTRATES:
1. Latex System: MPI INT 9.2A.
a. Prime Coat: Interior latex primer/sealer.
b. Intermediate Coat: Interior latex matching topcoat.
c. Topcoat: Interior latex (eggshell).
d. Intermediate Coat: High-performance architectural latex matching topcoat.
e. Topcoat: High-performance architectural latex (eggshell).

END OF SECTION 09912

SECTION 10431

SIGNAGE

GENERAL

RELATED DOCUMENTS

Drawings and general provisions of the Contract, including General and Supplementary Conditions and Division 1 Specification Sections, apply to this Section.

SUMMARY

This Section includes the following:

Interior panel signs.

Related Sections include the following:

Division 1 Section "Temporary Facilities and Controls" for temporary Project identification signs and for temporary information and directional signs.

Division 15 Sections for labels, tags, and nameplates for mechanical equipment.

Division 16 Sections for electrical service and connections for illuminated signs.

Division 16 Sections for labels, tags, and nameplates for electrical equipment.

Division 16 Sections for illuminated Exit signs and LED signs.

DEFINITIONS

ADA-ABA Accessibility Guidelines: U.S. Architectural & Transportation Barriers Compliance Board's "Americans with Disabilities Act (ADA) Accessibility Guidelines for Buildings and Facilities; Architectural Barriers Act (ABA) Accessibility Guidelines."

SUBMITTALS

A. The following information shall be provided.

1. A copy of this specification section, with addendum updates included, and all referenced and applicable sections, with addendum updates included, with each paragraph check-marked to indicate specification compliance or marked to indicate requested deviations from specification requirements. Check marks (✓) shall denote full compliance with a paragraph as a whole. If deviations from the specifications are indicated, and therefore requested by the Contractor, each deviation shall be underlined and denoted by a number in the margin to the right of the identified paragraph, referenced to a detailed written explanation of the reasons for requesting the deviation. The Construction Manager shall be the final authority for determining acceptability of requested deviations. The remaining portions of the paragraph not underlined shall signify compliance on the part of the Contractor with the specifications. Failure to include a copy of the marked-up specification sections, along with justification(s) for any requested deviations to the specification

requirements, with the submittal shall be sufficient cause for rejection of the entire submittal with no further consideration.

C. Product Data: For each type of product indicated.

Shop Drawings: Show fabrication and installation details for signs.

Show sign mounting heights, locations of supplementary supports to be provided by others, and accessories.

Provide message list, typestyles, graphic elements, including tactile characters and Braille, and layout for each sign.

Sign Schedule: Use same designations indicated on Drawings.

Qualification Data: For Installer and fabricator.

Warranty: Special warranty specified in this Section.

QUALITY ASSURANCE

Installer Qualifications: Fabricator of products, An employer of workers trained and approved by manufacturer.

Fabricator Qualifications: Shop that employs skilled workers who custom-fabricate products similar to those required for this Project and whose products have a record of successful in-service performance.

Source Limitations for Signs: Obtain each sign type indicated from one source from a single manufacturer.

Regulatory Requirements: Comply with applicable provisions in ADA-ABA Accessibility Guidelines and ICC/ANSI A117.1.

Electrical Components, Devices, and Accessories: Listed and labeled as defined in NFPA 70, Article 100, by a testing agency acceptable to authorities having jurisdiction, and marked for intended use.

PROJECT CONDITIONS

Field Measurements: Verify recess openings by field measurements before fabrication and indicate measurements on Shop Drawings.

COORDINATION

Coordinate placement of anchorage devices with templates for installing signs.

WARRANTY

Special Warranty: Manufacturer's standard form in which manufacturer agrees to repair or replace components of signs that fail in materials or workmanship within specified warranty period.

Failures include, but are not limited to, the following:

a. Deterioration of metal and polymer finishes beyond normal weathering.

b. Deterioration of embedded graphic image colors and] sign lamination.

Warranty Period: Five years from date of Substantial Completion.

PRODUCTS

MATERIALS

Aluminum Castings: ASTM B 26/B 26M, of alloy and temper recommended by sign manufacturer for casting process used and for use and finish indicated.

Aluminum Sheet and Plate: ASTM B 209, alloy and temper recommended by aluminum producer and finisher for type of use and finish indicated, and with at least the strength and durability properties of Alloy 5005-H32.

Aluminum Extrusions: ASTM B 221, alloy and temper recommended by aluminum producer and finisher for type of use and finish indicated, and with at least the strength and durability properties of Alloy 6063-T5.

Acrylic Sheet: ASTM D 4802, Category A-1 (cell-cast sheet), Type UVA (UV absorbing).

Applied Vinyl: Die-cut characters from vinyl film of nominal thickness of 3 mils with pressure-sensitive adhesive backing, suitable for exterior applications.

INTERIOR PANEL SIGNS

Available Manufacturers: Subject to compliance with requirements, manufacturers offering products that may be incorporated into the Work include, but are not limited to, the following:

ACE Sign Systems, Inc.
Advance Corporation; Braille-Tac Division.
Allen Industries Architectural Signage
Allenite Signs; Allen Marking Products, Inc.
APCO Graphics, Inc.
ASI-Modulex, Inc.
Best Sign Systems Inc.
Bunting Graphics, Inc.
Fossil Industries, Inc.
Gemini Incorporated.
Grimco, Inc.
Innerface Sign Systems, Inc.
InPro Corporation
Matthews International Corporation; Bronze Division.
Mills Manufacturing Company.
Mohawk Sign Systems.
Nelson-Harkins Industries.
Seton Identification Products.
Signature Signs, Incorporated.
Supersine Company (The)

Interior Panel Signs: Provide smooth sign panel surfaces constructed to remain flat under installed conditions within a tolerance of plus or minus 1/16 inch measured diagonally from corner to corner, complying with the following requirements:

Acrylic Sheet: 0.080 inch thick.

Laminated Sheet: High-pressure engraved stock with contrasting color face laminated to acrylic core as selected by Construction Manager from manufacturer's full range.

Edge Condition: Square cut.

Corner Condition: Rounded to radius indicated.

Mounting: Unframed.

c. Wall mounted with concealed anchors.
d. Manufacturer's standard anchors for substrates encountered.

Color: As selected by Construction Manager from manufacturer's full range.

Tactile Characters: Characters and Grade 2 Braille raised 1/32 inch above surface with contrasting colors.

Tactile and Braille Sign: Manufacturer's standard process for producing text and symbols complying with ADA-ABA Accessibility Guidelines and with ICC/ANSI A117.1. Text shall be accompanied by Grade 2 Braille. Produce precisely formed characters with square-cut edges free from burrs and cut marks; Braille dots with domed or rounded shape.

Panel Material: Clear acrylic sheet with opaque color coating, subsurface applied.

Raised-Copy Thickness: Not less than 1/32 inch.

Subsurface Copy: Apply minimum 4-mil- thick vinyl copy to back face of clear acrylic sheet forming panel face to produce precisely formed opaque image. Image shall be free of rough edges.

Subsurface Engraved Acrylic Sheet: Reverse-engrave back face of clear acrylic sheet. Fill resulting copy with enamel. Apply opaque background color coating over enamel-filled copy.

Colored Coatings for Acrylic Sheet: For copy colors, provide colored coatings, including inks, dyes, and paints, that are recommended by acrylic manufacturers for optimum adherence to acrylic surface and are UV and water resistant for five years for application intended.

Panel Sign Schedule:

See drawings for panel sign types, sizes and locations.

Pole mounting, noncorroding fasteners for substrates encountered.

ACCESSORIES

Anchors and Inserts: Provide nonferrous-metal or hot-dip galvanized anchors and inserts for exterior installations and elsewhere as required for corrosion resistance. Use toothed steel or lead expansion-bolt devices for drilled-in-place anchors. Furnish inserts, as required, to be set into concrete or masonry work.

FABRICATION

General: Provide manufacturer's standard signs of configurations indicated.

Welded Connections: Comply with AWS standards for recommended practices in shop welding. Provide welds behind finished surfaces without distortion or discoloration of exposed side. Clean exposed welded surfaces of welding flux and dress exposed and contact surfaces.

Mill joints to tight, hairline fit. Form joints exposed to weather to exclude water penetration.

Preassemble signs in the shop to greatest extent possible. Disassemble signs only as necessary for shipping and handling limitations. Clearly mark units for reassembly and installation, in location not exposed to view after final assembly.

Conceal fasteners if possible; otherwise, locate fasteners where they will be inconspicuous.

FINISHES, GENERAL

Comply with NAAMM's "Metal Finishes Manual for Architectural and Metal Products" for recommendations for applying and designating finishes.

Protect mechanical finishes on exposed surfaces from damage by applying a strippable, temporary protective covering before shipping.

Appearance of Finished Work: Variations in appearance of abutting or adjacent pieces are acceptable if they are within one-half of the range of approved Samples. Noticeable variations in the same piece are not acceptable. Variations in appearance of other components are acceptable if they are within the range of approved Samples and are assembled or installed to minimize contrast.

ALUMINUM FINISHES

Baked-Enamel Finish: AA-C12C42R1x (Chemical Finish: cleaned with inhibited chemicals; Chemical Finish: acid-chromate-fluoride-phosphate conversion coating; Organic Coating: as specified below). Apply baked enamel complying with paint manufacturer's written instructions for cleaning, conversion coating, and painting.

Organic Coating: Thermosetting, modified-acrylic enamel primer/topcoat system complying with AAMA 2603 except with a minimum dry film thickness of 1.5 mils, medium gloss.

ACRYLIC SHEET FINISHES

Colored Coatings for Acrylic Sheet: For copy and background and frame colors, provide colored coatings, including inks, dyes, and paints, that are recommended by acrylic manufacturers for optimum adherence to acrylic surface and that are UV and water resistant for five years for application intended.

EXECUTION

EXAMINATION

Examine substrates, areas, and conditions, with Installer present, for compliance with requirements for installation tolerances and other conditions affecting performance of work.

Verify that items, including anchor inserts, and electrical power are sized and located to accommodate signs.

Proceed with installation only after unsatisfactory conditions have been corrected.

INSTALLATION

Locate signs and accessories where indicated, using mounting methods of types described and complying with manufacturer's written instructions.

Install signs level, plumb, and at heights indicated, with sign surfaces free of distortion and other defects in appearance.

Interior Wall Signs: Install signs on walls adjacent to latch side of door where applicable. Where not indicated or possible, such as double doors, install signs on nearest adjacent walls. Locate to allow approach within 3 inches of sign without encountering protruding objects or standing within swing of door.

Wall-Mounted Signs: Comply with sign manufacturer's written instructions except where more stringent requirements apply.

Two-Face Tape: Mount signs to smooth, nonporous surfaces. Do not use this method for vinyl-covered or rough surfaces.

Silicone-Adhesive Mounting: Attach signs to irregular, porous, or vinyl-covered surfaces.

Shim Plate Mounting: Provide 1/8-inch- thick, concealed aluminum shim plates with predrilled and countersunk holes, at locations indicated, and where other mounting methods are not practicable. Attach plate with fasteners and anchors suitable for secure attachment to substrate. Attach panel signs to plate using method specified above.

Mechanical Fasteners: Use nonremovable mechanical fasteners placed through predrilled holes. Attach signs with fasteners and anchors suitable for secure attachment to substrate as recommended in writing by sign manufacturer.

Dimensional Characters: Mount characters using standard fastening methods to comply with manufacturer's written instructions for character form, type of mounting, wall construction, and condition of exposure indicated. Provide heavy paper template to establish character spacing and to locate holes for fasteners.

Flush Mounting: Mount characters with backs in contact with wall surface.

Projected Mounting: Mount characters at projection distance from wall surface indicated.

CLEANING AND PROTECTION

After installation, clean soiled sign surfaces according to manufacturer's written instructions. Protect signs from damage until acceptance by Owner.

END OF SECTION 10431

SECTION 10454

PEDESTRIAN CONTROL EQUIPMENT (Gates/Turnstiles)

PART I – GENERAL

1.1 SECTION INCLUDES

A. Furnishing and installation of waist high security turnstiles.
B. Furnishing and installation of waist high pedestrian gates with a 36 inch opening.

1.2 RELATED SECTIONS

A. Section 08710 - Door Hardware

1.3 QUALITY ASSURANCE

A. Manufacturer shall specialize in the manufacture of security turnstiles and pedestrian gates and have a minimum of 10 years experience.
B. Installer shall have a minimum of one year experience installing similar equipment, or shall supply a factory representative during installation of the turnstiles and pedestrian gates.

1.4 SUBMITTALS

A. The following information shall be provided.
   a. A copy of this specification section, with addendum updates included, and all referenced and applicable sections, with addendum updates included, with each paragraph check-marked to indicate specification compliance or marked to indicate requested deviations from specification requirements. Check marks (✓) shall denote full compliance with a paragraph as a whole. If deviations from the specifications are indicated, and therefore requested by the Contractor, each deviation shall be underlined and denoted by a number in the margin to the right of the identified paragraph, referenced to a detailed written explanation of the reasons for requesting the deviation. The Construction Manager shall be the final authority for determining acceptability of requested deviations. The remaining portions of the paragraph not underlined shall signify compliance on the part of the Contractor with the specifications. Failure to include a copy of the marked-up specification sections, along with justification(s) for any requested deviations to the specification requirements, with the submittal shall be sufficient cause for rejection of the entire submittal with no further consideration.
B. Submit manufacturer's descriptive literature for specified equipment, including options.
C. Provide dimensional layout, installation instructions, electrical and communication connections and anchoring instructions.
D. Provide shop drawings, if required.

1.5 DELIVERY, STORAGE AND HANDLING

A. Deliver materials to job site in manufacturer's packaging undamaged, complete with installation instructions.
B. Store off ground, under cover, protected from weather, construction activities and debris.
C. Use forklift or pallet jack equipment as required for moving.

1.6 PROJECT/SITE CONDITIONS

A. Install the turn stiles on a level concrete pad.
B. Install the pedestrian gates on a level concrete pad

1.7 WARRANTY

Provide a warranty against defects in material and workmanship for a period of one (1) year from the date of installation. The warranty covers defects in materials and workmanship and does not cover freight, labor or incidental costs. Provide full warranty terms from manufacturer.

PART 2 – PRODUCTS

2.1 MANUFACTURER

A. The basis of design is the EDC-BN turnstile and the SSG waist high pedestrian gate by Alvarado Mfg. Co., Inc. 12660 Colony Street, Chino, CA 91710.
B. Substitutions subject to compliance with requirements are acceptable.

2.2 PRODUCT

A. The turnstile shall include: key override control in both directions; hydraulically dampened self-centering arm rotation; a personnel counting mechanism, dual key lid locks and ability to convert turnstile to electric lock control in the field if desired. *Note*: Self-centering through spinning and settling is not acceptable. The hydraulic dampening shall be of a quality such that when lockarms are disengaged, the turnstile shall rotate only once and shall self-center when the turnstile arms are rapidly engaged with up to 115 lbs of force.
B. The waist high pedestrian gates shall include single direction passage; self-closing design, left swing, 36 inch passage width, stainless steel finish, remote electronic release

2.3 FACTORY TESTING

A. Product shall be fully tested at the factory prior to shipment.
B. Check all mechanical connections.
C. Inspect product finish. Touch up prior to shipment

2.4 CONSTRUCTION

A. Turn Stile - Interior Operating Mechanism:
   1. The ratchet assembly shall be cast stainless steel. Laminated steel is not acceptable.
   2. Bearings shall be sealed, precision type.
   3. Rotation shall be hydraulically dampened and shall self-center using a long-lasting rotational style dampener. The hydraulic dampening shall be of a quality such that when lockarms are disengaged, the turnstile shall rotate only once and shall self-center when the turnstile arms are rapidly engaged with up to 115 lbs of force.
   4. Mechanical key overrides shall be provided for both directions of rotation.

B. Turn Stile Cabinet:
   1. The cabinet shall be formed and welded 16 gauge stainless steel. Exterior welds are ground smooth and polished to a #4 satin finish. There shall be no exterior fasteners used or visible on the cabinet.
   2. The lid shall be 14 gauge stainless steel, have hinged operation and shall contain two lock assemblies (locks keyed alike) to securely attach the lid to the cabinet. The mating between the lid and cabinet shall be flush (not overlapping).

3. Bullnose Cabinet: Rounded ends shall be added to both ends of the turnstile cabinet.

C. Turn Stile Head and Arms:
   1. The turnstile head shall be a solid piece of aluminum, machined to an attractive conical shape. Finish shall be clear anodized.
   2. The turnstile arms shall be 1.5" x 16 gauge stainless steel tubing polished to a #4 satin finish. The visible portion of the arms shall have a welded stainless steel cap with welds polished smooth. The arms shall press fit into the head and be welded from the back for superior holding strength over arms fastened into the head. The arms shall extend 15.5" from the inside edge of the cabinet.

D. Pedestrial Gate: 16-gauge stainless steel tubing, polished to a satin #4 finish.

E. Hinge Post: 11-gauge stainless steel, polished to a satin #4 finish.

2.5 FINISH

A. Stainless Steel: All exterior components, except the aluminum turnstile head shall be fabricated from stainless steel, polished to a satin (#4) finish.

2.6 AVAILABLE OPTIONS

A. Counter: A lithium battery powered seven digit LCD counter shall be installed in each turnstile to read exits from the building. Each rotation of the turnstile arm shall generate a count. The counters shall be key resettable to "0".

PART 3 – EXECUTION

3.1 SITE EXAMINATION

A. Inspection: Installer must examine the installation location and advise the Contractor of any site conditions inconsistent with proper installation of the product. These conditions include but are not limited to the following:
   1. Turnstiles and Gates must be installed on a level concrete pad.
   2. Power supply and control wiring must be installed. Follow manufacturer's recommendations for conduit stub up or via alternate methods if manufacturer is contacted and approves.

B. Installation shall not begin until unacceptable conditions are rectified.

C. Installation: Install turnstiles and gates in accordance with manufacturer's instructions.

D. Adjustment: Installer shall adjust turnstiles for proper performance after installation.

E. Instruction: A factory trained installer shall demonstrate to the owner's maintenance crew the proper operation and the necessary service requirements of the equipment, including exterior maintenance.

F. Cleaning: Clean turnstile and area carefully after installation to remove excess caulk, dirt and labels.

END OF SECTION 10454

SECTION 10505

METAL LOCKERS

GENERAL

RELATED DOCUMENTS

Drawings and general provisions of the Contract, including General and Supplementary Conditions and Division 1 Specification Sections, apply to this Section.

SUMMARY

Section Includes:

Metal lockers in the Control Room and Hallway

SUBMITTALS

The following information shall be provided in accordance with Section 01330.

1. A copy of this specification section, with addendum updates included, and all referenced and applicable sections, with addendum updates included, with each paragraph check-marked to indicate specification compliance or marked to indicate requested deviations from specification requirements. Check marks (✓) shall denote full compliance with a paragraph as a whole. If deviations from the specifications are indicated, and therefore requested by the Contractor, each deviation shall be underlined and denoted by a number in the margin to the right of the identified paragraph, referenced to a detailed written explanation of the reasons for requesting the deviation. The Construction Manager shall be the final authority for determining acceptability of requested deviations. The remaining portions of the paragraph not underlined shall signify compliance on the part of the Contractor with the specifications. Failure to include a copy of the marked-up specification sections, along with justification(s) for any requested deviations to the specification requirements, with the submittal shall be sufficient cause for rejection of the entire submittal with no further consideration.

Product Data: For each type of product indicated. Include construction details, material descriptions, dimensions of individual components and profiles, and finishes for each type of metal locker.

Shop Drawings: For metal lockers. Include plans, elevations, sections, details, and attachments to other work.

Show locker trim and accessories.

Include locker identification system.

Samples for Verification: For metal lockers, in manufacturer's standard sizes.

Qualification Data: For qualified Installer.

Maintenance Data: For adjusting, repairing, and replacing locker doors and latching mechanisms to include in maintenance manuals.

Warranty: Sample of special warranty.

QUALITY ASSURANCE

Installer Qualifications: Manufacturer's authorized representative who is trained and approved for installation of units required for this Project.

Source Limitations: Obtain metal lockers, and accessories from single source from single manufacturer.

Regulatory Requirements: Where metal lockers are indicated to comply with accessibility requirements, comply with the U.S. Architectural & Transportation Barriers Compliance Board's "Americans with Disabilities Act (ADA) and Architectural Barriers Act (ABA) Accessibility Guidelines for Buildings and Facilities".

DELIVERY, STORAGE, AND HANDLING

Do not deliver metal lockers until spaces to receive them are clean, dry, and ready for their installation.

Deliver master and control keys to Owner by registered mail or overnight package service.

PROJECT CONDITIONS

Field Measurements: Verify actual dimensions of recessed openings by field measurements before fabrication.

COORDINATION

Coordinate sizes and locations of metal bases for metal lockers.

Coordinate sizes and locations of framing, blocking, furring, reinforcements, and other related units of work specified in other Sections to ensure that metal lockers can be supported and installed as indicated.

WARRANTY

Special Warranty: Manufacturer's standard form in which manufacturer agrees to repair or replace components of metal lockers that fail in materials or workmanship, excluding finish, within specified warranty period.

Failures include, but are not limited to, the following:

a. Structural failures.

b. Faulty operation of latches and other door hardware.

Damage from deliberate destruction and vandalism is excluded.

Warranty Period for All-Welded Metal Lockers: 10 years from date of Substantial Completion.

PRODUCTS

MATERIALS

Cold-Rolled Steel Sheet: ASTM A 1008/A 1008M, Commercial Steel (CS), Type B, suitable for exposed applications.

Metallic-Coated Steel Sheet: ASTM A 653/A 653M, Commercial Steel (CS), Type B; with A60 zinc-iron, alloy (galvannealed) coating designation.

Expanded Metal: ASTM F 1267, Type II (flattened), Class I, 3/4-inch steel mesh, with at least 70 percent open area.

Extruded Aluminum: ASTM B 221, alloy and temper recommended by aluminum producer and manufacturer for type of use and finish indicated.

Steel Tube: ASTM A 500, cold rolled.

Particleboard: ANSI A208.1, Grade M-2.

Fasteners: Zinc- or nickel-plated steel, slotless-type, exposed bolt heads; with self-locking nuts or lock washers for nuts on moving parts.

Anchors: Material, type, and size required for secure anchorage to each substrate.

Provide nonferrous-metal or hot-dip galvanized anchors and inserts on inside face of exterior walls, and elsewhere as indicated, for corrosion resistance.

Provide toothed-steel or lead expansion sleeves for drilled-in-place anchors.

METAL LOCKERS

Products: Subject to compliance with requirements, provide the following:

Republic Storage Systems, LLC. Products by other manufacturers may be approved provided they meet the detailed specifications written below. Approval procedure shall be as specified in the General Conditions of the specifications.

Location: Control Room as indicated on Drawings.

Locker Arrangement: Box as indicated on Drawings.

Material: All major steel parts shall be made of mild cold rolled steel, free from imperfections and capable of taking a high grade enamel finish.

Finish: Surfaces of the steel shall be thoroughly cleaned and phosphatized in a seven-stage process. All parts shall then be finished with a heavy coat of enamel baked on at 300 degrees for 30 minutes.

Construction: Lockers shall be built on the unit principle - each locker shall have an individual door and frame, an individual top, bottom, back and shelves with common intermediate uprights separating units.

Door Frames: Door frames shall be 16 gauge formed into 1" wide face channel shapes with a continuous vertical door strike, integral with the frame on both sides of the door opening. Intermediate cross frame members are not required on box lockers.

Doors: Standard Box Lockers 3, 4, 5 and 6 openings high are 16 gauge steel and shall be formed with right angle flanges on all four sides. Locker doors shall be ventilated by louvers on the face of each door, top and bottom Hinges: Welded to door and attached to door frame with no fewer than two factory-installed rivets per hinge that are completely concealed and tamper resistant when door is closed; fabricated to swing 180 degrees.

Latching: Latching shall be a one-piece, pre-lubricated spring steel latch, completely contained within the lock bar under tension to provide rattle-free operation. The lock bar shall be of pre-coated, double-channel steel construction. The lock bar shall be securely contained in the door channel by self-lubricating polyethylene guides that isolate the lock bar from metal-to-metal contact with the door. The lock bar travel is limited by contacting resilient high-quality elastomeric cushioning devices concealed inside the lock bar. Frame hooks to accept latching shall be of heavy gauge steel, set close in and welded to the door frame. Continuous vertical door strike shall protect frame hooks from door slam damage. A soft rubber silencer shall be securely installed on each frame hook to absorb the impact caused by closing of the door. Box locker doors shall be equipped with a padlock hasp and a stainless steel strike plate with an integral handle pull.

Hinges: Hinges shall be 2" high, 5-knuckle, full loop, tight pin style, securely welded to frame and double riveted to the inside of the door flange. Locker doors 42" high and less shall have two hinges.

Equipment: Equip each metal locker with identification plate.

Accessories:

Legs: 6 inches high; formed by extending vertical frame members, or fabricated from 0.075-inch nominal-thickness steel sheet; welded to bottom of locker.

Continuous Sloping Tops: Fabricated from 0.048-inch nominal-thickness steel sheet, with a pitch of approximately 20 degrees.

EXECUTION

EXAMINATION

Examine walls, floors, and support bases, with Installer present, for compliance with requirements for installation tolerances and other conditions affecting performance of the Work.

Prepare written report, endorsed by Installer, listing conditions detrimental to performance of the Work.

Proceed with installation only after unsatisfactory conditions have been corrected.

INSTALLATION

General: Install level, plumb, and true; shim as required, using concealed shims.

Anchor locker runs at ends and at intervals recommended by manufacturer, but not more than 36 inches o.c. Using concealed fasteners, install anchors through backup reinforcing plates, channels, or blocking as required to prevent metal distortion.

Anchor single rows of metal lockers to walls near top of lockers and to floor.

Anchor back-to-back metal lockers to floor.

All-Welded Metal Lockers: Connect groups together with standard fasteners, with no exposed fasteners on face frames.

Equipment and Accessories: Fit exposed connections of trim, fillers, and closures accurately together to form tight, hairline joints, with concealed fasteners and splice plates.

Attach door locks on doors using security-type fasteners.

Identification Plates: Identify metal lockers with identification indicated on Drawings.

c. Attach plates to each locker door, near top, centered, with at least two aluminum rivets.

d. Attach plates to upper shelf of each open-front metal locker, centered, with a least two aluminum rivets.

Attach recess trim to recessed metal lockers with concealed clips.

Attach filler panels with concealed fasteners. Locate filler panels where indicated on Drawings.

Attach sloping-top units to metal lockers, with closures at exposed ends.

Attach boxed end panels with concealed fasteners to conceal exposed ends of nonrecessed metal lockers.

Attach finished end panels with fasteners only at perimeter to conceal exposed ends of nonrecessed metal lockers.

ADJUSTING, CLEANING, AND PROTECTION

Clean, lubricate, and adjust hardware. Adjust doors and latches to operate easily without binding. Verify that integral locking devices operate properly.

Protect metal lockers from damage, abuse, dust, dirt, stain, or paint. Do not permit use during construction.

Touch up marred finishes, or replace metal lockers that cannot be restored to factory-finished appearance. Use only materials and procedures recommended or furnished by locker manufacturer.

END OF SECTION 10505

SECTION 10510

PISTOL LOCKERS

GENERAL

RELATED DOCUMENTS

Drawings and general provisions of the Contract, including General and Supplementary Conditions and Division 1 Specification Sections, apply to this Section.

SUMMARY

Section Includes:

Pistol lockers in the Gun Closet

SUBMITTALS

The following information shall be provided in accordance with Section 01330.

1. A copy of this specification section, with addendum updates included, and all referenced and applicable sections, with addendum updates included, with each paragraph check-marked to indicate specification compliance or marked to indicate requested deviations from specification requirements. Check marks (✓) shall denote full compliance with a paragraph as a whole. If deviations from the specifications are indicated, and therefore requested by the Contractor, each deviation shall be underlined and denoted by a number in the margin to the right of the identified paragraph, referenced to a detailed written explanation of the reasons for requesting the deviation. The Construction Manager shall be the final authority for determining acceptability of requested deviations. The remaining portions of the paragraph not underlined shall signify compliance on the part of the Contractor with the specifications. Failure to include a copy of the marked-up specification sections, along with justification(s) for any requested deviations to the specification requirements, with the submittal shall be sufficient cause for rejection of the entire submittal with no further consideration.

Product Data: For each type of product indicated. Include construction details, material descriptions, dimensions of individual components and profiles, and finishes for each type of metal locker.

Shop Drawings: For gun lockers. Include plans, elevations, sections, details, and attachments to other work.

Show gun locker trim and accessories.

Samples for Verification: For gun lockers, in manufacturer's standard sizes.

Qualification Data: For qualified Installer.

Maintenance Data: For adjusting, repairing, and replacing locker doors and latching mechanisms to include in maintenance manuals.

Warranty: Sample of special warranty.

QUALITY ASSURANCE

Installer Qualifications: Manufacturer's authorized representative who is trained and approved for installation of units required for this Project.

Source Limitations: Obtain gun lockers and accessories from single source from single manufacturer.

DELIVERY, STORAGE, AND HANDLING

Do not deliver gun lockers until spaces to receive them are clean, dry, and ready for their installation.

Deliver master and control keys to Owner by registered mail or overnight package service.

PROJECT CONDITIONS

Field Measurements: Verify actual dimensions of recessed openings by field measurements before fabrication.

COORDINATION

Coordinate sizes and locations of framing, blocking, furring, reinforcements, and other related units of work specified in other Sections to ensure that metal lockers can be supported and installed as indicated.

WARRANTY

Special Warranty: Manufacturer's standard form in which manufacturer agrees to repair or replace components of gun lockers that fail in materials or workmanship, excluding finish, within specified warranty period.

Failures include, but are not limited to, the following:

a. Structural failures.

b. Faulty operation of latches and other door hardware.

Damage from deliberate destruction and vandalism is excluded.

Warranty Period for All-Welded Metal Lockers: 10 years from date of Substantial Completion.

PRODUCTS

MATERIALS

Cold-Rolled Steel Sheet: 10 Gauge, Commercial Steel (CS), suitable for exposed applications.

Anchors: Material, type, and size required for secure anchorage to each substrate.

Provide nonferrous-metal or hot-dip galvanized anchors and inserts on inside face of exterior walls, and elsewhere as indicated, for corrosion resistance.

Provide toothed-steel or lead expansion sleeves for drilled-in-place anchors.

GUN LOCKERS

Products: Subject to compliance with requirements, provide the following:

Perma-Vault Stackable Pistol Boxes, PVB-5813-M. Products by other manufacturers may be approved provided they meet the detailed

specifications written below. Approval procedure shall be as specified in the General Conditions of the specifications.

Location: Gun Closet as indicated on Drawings.

Locker Arrangement: Stacked as indicated on Drawings.

Material: All major steel parts shall be made of 10 Gauge cold rolled steel, free from imperfections and capable of taking a high grade powder coat finish.

Construction: Gun Lockers shall be electro-statically welded steel construction.

Doors: Shall be hinged from the bottom or side.

Hinges: Welded to door and door frame; fabricated to swing 180 degrees.

Keying: Removable only in locked position. Master keyed, keyed differently.

EXECUTION

EXAMINATION

Examine walls, floors, and support bases, with Installer present, for compliance with requirements for installation tolerances and other conditions affecting performance of the Work.

Prepare written report, endorsed by Installer, listing conditions detrimental to performance of the Work.

Proceed with installation only after unsatisfactory conditions have been corrected.

INSTALLATION

General: Install level, plumb, and true; shim as required, using concealed shims.

Anchor lockers using concealed fasteners, install anchors through backup reinforcing plates, into masonry with toothed-steel or lead expansion sleeves for drilled-in-place anchors.

All-Welded Metal Lockers: Connect groups together with manufacturer's standard fasteners.

ADJUSTING, CLEANING, AND PROTECTION

Clean, lubricate, and adjust hardware. Verify that integral locking devices operate properly.

Protect metal lockers from damage, abuse, dust, dirt, stain, or paint. Do not permit use during construction.

Touch up marred finishes, or replace metal lockers that cannot be restored to factory-finished appearance. Use only materials and procedures recommended or furnished by locker manufacturer.

END OF SECTION 10510

SECTION 11910

WALK-THROUGH METAL DETECTOR

GENERAL

RELATED DOCUMENTS

Drawings and general provisions of the Contract, including General and Supplementary Conditions and Division 1 Specification Sections, apply to this Section.

SUMMARY

Section Includes:

Walk-through Metal Detector

SUBMITTALS

The following information shall be provided in accordance with Section 01330.

1. A copy of this specification section, with addendum updates included, and all referenced and applicable sections, with addendum updates included, with each paragraph check-marked to indicate specification compliance or marked to indicate requested deviations from specification requirements. Check marks (✓) shall denote full compliance with a paragraph as a whole. If deviations from the specifications are indicated, and therefore requested by the Contractor, each deviation shall be underlined and denoted by a number in the margin to the right of the identified paragraph, referenced to a detailed written explanation of the reasons for requesting the deviation. The Construction Manager shall be the final authority for determining acceptability of requested deviations. The remaining portions of the paragraph not underlined shall signify compliance on the part of the Contractor with the specifications. Failure to include a copy of the marked-up specification sections, along with justification(s) for any requested deviations to the specification requirements, with the submittal shall be sufficient cause for rejection of the entire submittal with no further consideration.

Product Data: Include installation instructions, material descriptions, dimensions of individual components and profiles, and finishes for metal detector.

Shop Drawings: Include plans, elevations, sections, details, and attachments to other work.

Qualification Data: For qualified Installer.

Maintenance Data: include maintenance manuals.

Warranty: Sample of special warranty.

QUALITY ASSURANCE

Installer Qualifications: Manufacturer's authorized representative who is trained and approved for installation of units required for this Project.

DELIVERY, STORAGE, AND HANDLING

Do not deliver Metal Dector until spaces to receive them are clean, dry, and ready for their installation.

PROJECT CONDITIONS

Field Measurements: Verify actual dimensions of detector location by field measurements before fabrication.

Verify that power source is properly installed.

WARRANTY

Special Warranty: Manufacturer's standard form in which manufacturer agrees to repair or replace components of metal detector that fail in materials or workmanship, excluding finish, within specified warranty period.

Failures include, but are not limited to, the following:

a. Structural failures.
b. Faulty operation.

Warranty Period: 10 years from date of Substantial Completion.

PRODUCTS

WALK-THROUGH METAL DETECTOR

Products: provide the following:

Proprietary Metor 6M Walk-through metal detector as manufactured by Rapiscan Systems.

Location: As indicated on Drawings.

Provide with battery operated backup capable of running for 8 hours when no power is available.

Bi-directional remote control enabling programming and copying the parameters from the existing metal detector.

32 inches wide ADA compliant crosspiece for wheelchair accessibility.

Test Pieces to assist in calibration and testing.

Remote security management software that collects statistics on traffic flow.

Traffic lights that indicate when the next person can enter the detector.

EXECUTION

EXAMINATION

Examine floors, and power sources, with Installer present, for compliance with requirements for installation and other conditions affecting performance of the Work.

Prepare written report, endorsed by Installer, listing conditions detrimental to performance of the Work.

Proceed with installation only after unsatisfactory conditions have been corrected.

INSTALLATION

General: Install only after all other construction work is complete and job site has been cleaned.

ADJUSTING, CLEANING, AND PROTECTION

Clean, adjust and verify that the detector is working properly and is programmed to function with the existing detector.

Protect from damage, abuse, dust, dirt, stain, or paint.

END OF SECTION 10910

SECTION 15000

MECHANICAL GENERAL REQUIREMENTS

GENERAL

CONTRACT CONDITIONS

For conditions of the Contract, refer to the General Condition of the Contract for Construction, Standard Form of Agreement Between Owner and Contractor and Division 1 – General Requirements.

For general requirements of the Contract, refer to Division 01 General Requirements. Refer to Division 16 Electrical.

The drawings and specifications are ***performance based*** and do not describe in detail, nor may not fully represent in detail all required work. The Contractor is fully responsible for the timely installation of all Mechanical systems and equipment in full compliance with the Local Authority having jurisdiction.

Contractor Qualifications: only currently licensed Contractors who have been regularly engaged in the full time repair, reconstruction and installation of commercial and industrial Mechanical systems of similar capacity and the installation of control systems of similar type, for a minimum period of five years shall be considered for this project.

WORK INCLUDED

Description: The Work of this Section includes general provisions governing work under Division 15 Mechanical.

Contractor's Responsibilities:

Coordination. The Mechanical Subcontractor(s) are responsible for coordinating their work during bid phase, during shop drawing preparation and during construction. The Mechanical Subcontractor(s) shall closely coordinate the work with the Architectural and Electrical drawings, the local authorities having jurisdiction and with the work of other trades.

Site visit and review of existing building mechanical drawings ascertain existing conditions and extent of scope of work encompassed in these contract documents.

The contractor shall arrange for, and pay for, all necessary fees, permits and inspections required for the Mechanical portions of the work.

Prepare shop drawings, fabrication drawings (as indicated), manufacturer's product and material data and samples for approval.

Receive and unload products and materials on site and inspect for completeness and correctness.

Handle, store and install products and materials.

Repair or replace items damaged after receipt and installation.

All rigging/hoisting.

The Contractor is responsible for clarifying his bid to ensure all items required for a complete and fully operational system are provided. The Contractor shall coordinate his work with the work of all trades to ensure all items requiring interconnection to the work of other trades are included.

Compliance with all State and Local Codes, latest editions.

Coordinate the Electrical work required for the Mechanical equipment and control systems with Division 16 – Electrical.

Coordinate the Electrical requirements for the Mechanical systems and controls with Division 16 – Electrical to provide complete and fully operational Mechanical systems, including alarms and control devices.

Preserve and protect all existing utilities to maintain uninterrupted services throughout the course of the construction. Provide temporary utilities as required to comply with this requirement.

Fan air quantities must add up.

The Contractor is responsible for installing the work as designed and permitted. Should changes be requested by the Architect, General Contractor or Owner, the Contractor shall submit a written request to have Engineering/Architectural design changes made. No work shall proceed until the Contractor has received Engineering/Architectural design and the changes have been resubmitted and approved by the Building Permitting Authority.

No Contractor, Architect, vendor or individual shall in any way make changes to the Engineer's drawings. Red marked As-Built shall be marked as such and the Contractor shall "X" out any PE stamp on As-Built markups. Should the Contractor need a background to sketch, contact the Architect.

Model numbers: are given as a convenience and applicable materials, performance, and ability for a complete and operational system/equipment govern. This includes coordination with other trades, fire integrity, code compliance and design intent.

RELATED WORK NOT IN DIVISION 15

Cutting and repairing of walls, floors, ceilings, roofs, and structure, except as specified herein.

Painting, except as specified herein.

Providing electrical wiring for power, interlock, and certain parts of control systems as described herein.

CODES AND STANDARDS

Codes cited herein represent minimum requirements. Express requirements of the contract documents are in excess of the minimum requirements. Conform to the Contract General, Special and Supplemental Conditions.

The Mechanical materials, equipment and systems installation shall conform to the Latest Editions, of all applicable State and Local Codes. Utilize the latest edition of any referenced code which is in effect, during date the original drawings were issued, and utilize all codes and standards as prescribed by the Local Authority having jurisdiction,

including any referenced amendments. Contact the local Building Inspector to verify applicable codes or with code questions. In addition, unless otherwise referenced in the applicable code, conform to the requirements of:
ASHRAE Standard 90.1-2004 with latest Addenda(s).
ASHRAE Standard 62.1-2004, with latest Addenda.
Local, State and County Mechanical and Energy Codes, latest editions.

The Mechanical materials, equipment and systems installation shall conform to the following minimum standards, latest editions:
NFPA 70 – National Electric Code.
NFPA 90A – Installation of Air Conditioning and Ventilating Systems.
NFPA 90B – Warm Air Heating and Air Conditioning Systems.
NFPA 101 – Code for Safety to Life from Fire in Buildings and Structures.
SMACNA Standards.
ASHRAE Standards.
The 2006 Georgia Minimum Codes including Amendments and Georgia Energy Code.

Abbreviations for code-and standard making bodies used in Division 15:

AGA	American Gas Association
AMCA	Air Movement and Control Association, Inc.
ASHRAE	American Society of Heating Refrigerating, and Air-Conditioning Engineers, Inc.
ASME	American Society of Mechanical Engineers
ASTM	American Society for Testing and Materials
IMC	International Mechanical Codes
IPC	International Plumbing Codes
IFGC	International Fuel Gas Code
NFPA	National Fire Protection Association
UL	Underwriters Laboratories Inc.
FM	Factory Mutual
OSHA	Occupational Safety and Health Administration

LAYOUT BASIS

The system layouts are based upon the use of particular items of equipment, with such items identified in the documents as "layout basis" by manufacturers make and model number. Physical characteristics of these equipment items, such as dimensions, arrangement, service connections, and structural supports required to install these particular items, have been considered in making the layout.

The equipment of any listed "acceptable manufacturer" for that item of equipment may be submitted for substitution provided that all provisions of "Space Conditions" will be complied with, that all required service connections will be made, and all building and systems design modifications will be made at no additional cost to the Owner.

The fact that a firm is named as an acceptable manufacturer is not to be implied as meaning that the stock product of that manufacturer will be an acceptable substitute. Any substitutions of products by named acceptable manufacturers must meet the express requirements of the documents.

Should substitution of any equipment item for a named Layout Basis item require any redesign by Design Professionals, such as for structure, ductwork, piping, equipment or electrical service, Contractor will be held responsible for all extra charges incurred to accommodate that substitution, including general construction costs and added costs for design changes by Architect and by structural, mechanical, and electrical engineers.

Should investigation of submittals disclose that the above mentioned requirements cannot be met on the basis of the proposed substitute equipment the Architect may require that the equipment be furnished as specified for "Layout Basis".

SUBMITTALS

Refer to Section 01300 Submittals for additional requirements governing submittals under Division 15 - Mechanical.

The Mechanical Subcontractor shall prepare, approve and submit for review by the Owner's Representative detailed shop drawings and manufacturer's product data for all materials and equipment to be incorporated into the Mechanical work. No material or equipment shall be delivered to the job site or installed before the Contractor has in his possession the approved shop drawings and manufacturer's product data for that particular material or equipment. Assemble into a single submittal, indicating coordination with all trades and ***bearing the stamp of approval of the Submitting Subcontractor and General Contractor***. Clearly mark that all Electrical characteristics have been coordinated and approved by the Electrical Contractor. Shop drawings not marked as reviewed and approved by the Submitting Subcontractor and the General Contractor, and that the Electrical Characteristics have not been coordinated with the Electrical Contractor – will be returned without review.

All shop drawings and manufacturer's product data submittals shall include the specific service, equipment tag (i.e. UH-1, EF-1, etc.) for which the material or equipment is to be used, and marked to show Specification section governing. Failure to mark submittals in accordance with the above format shall be considered due cause for rejection of shop drawings.

Provide principal dimensions and details of construction.

Indicate operating weights with necessary information to provide supports, hangers and foundations.

Review rendered on shop drawings shall not be considered as a guarantee of measurements, job conditions nor performance. Said review does not mean that the shop drawings and data submitted have been checked in detail nor coordinated with the work of other trades. Review of shop drawings does not relieve the Contractor from his responsibility of performing the work and shall not relieve the Contractor from providing complete and fully operational Mechanical systems as required by the Contract Documents.

Fabrication Drawings: Provide scaled and detailed Fabrication Drawings where any equipment or material appears not to fit within the area as indicated on the drawings.

Fabrication drawings are herein defined as scaled and dimensioned drawings produced by the Contractor indicating the exact location, size and routing of ductwork, piping and equipment in conflict. Fabrication drawings shall be coordinated with the work of all trades. Fabrication drawings shall not deviate from the design intent as delineated on the drawings. Fabrication drawings shall be of sufficient detail to indicate the exact placement of materials and equipment and shall show materials and equipment of other trades for coordination purposes. Exact equipment dimensions of the equipment indicated on the approved shop drawings shall be used. Fabrication drawings shall specifically point out any equipment or materials which will not fit within available space. Installation, fabrication or equipment purchase shall not proceed until these Fabrication drawings are approved in writing.

SPACE CONDITIONS

The ceiling cavity of this project is extremely tight and occupied with existing equipment, ductwork, piping and conduits to remain. Field verify all clearances prior to submission of bid, fabrication of materials or purchase of equipment. Identify any areas which the drawings indicate materials to be installed where the existing and new conditions will not facilitate the installation as depicted on the Drawings. Obtain written instruction from the Architect prior to proceeding with any work. Observe general locations of fixtures, apparatus, ductwork (existing & new), and piping (existing & new) indicated on the drawings.

Prior to submission of bid for projects consisting of existing conditions, visit the job site, observe and review existing conditions and become acquainted with all factors affecting the work, including required scheduling and delivery of materials, temporary utilities and services. Observe general locations of fixtures, apparatus, ductwork, and piping indicated on the drawings.

Base all measurements, both horizontal and vertical, on actual field measurements. Verify all conditions at the site and check correctness of same.

Any discrepancy between actual conditions and those indicated on the drawings or in the specifications, which prevents following the intent of the drawings and specifications, shall be immediately brought to the attention of the General Contractor and that phase of the work shall not proceed until written instructions are received.

Make measurements on the site for locating fixtures, apparatus and ductwork. Do not rely on dimensions obtained by scaling the drawings.

Install all equipment in strict accordance with the equipment manufacturer's published installation instructions, paying special attention for requirements for service access.

ELECTRIC CHARACTERISTICS

Provide electrically operated equipment built for operation with electric current characteristics of the building service.

All Electrical work furnished under Division 15 – Mechanical shall be performed by licensed electricians and shall conform to the requirements of Division 16 – Electrical.

The Mechanical Contractor is responsible for coordinating all electrical characteristics for equipment with the Electrical Contractor prior to shop drawing preparation.

All electric motors shall conform with latest NEMA, NEC and UL standards and shall operate within nominal nameplate amperage, not within the service factor.

The Contractor shall coordinate HVAC controls, wiring, materials and equipment with the General and Electrical Contractor prior to submission of his bid to ensure the electrical components of the Mechanical equipment are coordinated with the Electrical requirements. All power to controllers, power to control transformers, control conduit and control wiring shall be included in the bid. The Mechanical Subcontractor must submit a statement in his bid clarifying responsibility of wiring with Division 16 – Electrical demonstrating there is no overlap nor gaps in the power and wiring requirements for all Mechanical systems.

The Mechanical Contractor is responsible for ensuring the Mechanical Equipment submitted will conform to the Electrical Requirements stated on the Electrical Drawings, for voltage, phase, minimum circuit Ampacity and maximum Overcurrent protection size. Should the proposed Mechanical equipment require other than the electrical circuit and electrical equipment indicated on the Electrical Drawings, the Mechanical Contractor shall immediately submit a Request for Information prior to bid or in his submittal, state that the Mechanical Contractor is solely responsible for any necessary design or construction costs related to needed changes in the electrical system(s) to accommodate the change.

DEFINITIONS

To establish common meaning of terms in the mechanical work, the following definitions apply:

Furnish – "provide and install", unless otherwise specifically indicated.

Install – unloading, unpacking, assembly, erection, placing, anchoring, applying, working to dimensions, finishing, curing, protecting, cleaning and similar operations to facilitate complete and operable installation, including start up, testing and adjusting. Install means complete, plum, level, in a professional and craftsman like manner. Fittings must align pipe and duct systems, with even slope or level installation as applicable. Neat installation is required. The finished work product shall be free of deficiencies, without repairs, without patches. Remove items requiring repair, and completely reinstall.

Complete - with all accessory items required for safe operation within the design intent.

Temperature - reference to degrees or ° means degrees Fahrenheit (F).

Pressure - reference to psi means pounds per square inch gage pressure; reference to "or inches means inches of water column (wc).

Indicated – where the word "indicated" is used, it is to be understood that the reference is made to the drawings and specifications accompanying this Contract unless stated otherwise.

Contractor – responsible party for the portions of the work herein specified in the Mechanical Divisions of the specifications and indicated on the "M", "P" or "FP" drawings.

Discrepancies – where work indicated on the Contract Drawings differs from the specifications or other drawings or drawing schedules or drawing details. The "work" described is fully included in the "Contract" and the Contractor is responsible for requesting clarification prior to bid, procurement and installation. No Change Order will be allowed for discrepancies which the Contractor has not requested clarification.

CONTRACTOR USE OF SITE AND PREMISES

The Contractor's personnel shall become familiar with and obey all General Contractor rules, procedures, safety rules, fire safety regulations and security regulations.

The Contractor's personnel shall keep within the limits of the work area (and within avenues of designated entrances and exits). The Contractor shall not enter any restricted areas unless specifically cleared for such entry by the General Contractor.

All building emergency exits and pathways shall be maintained clear and unobstructed at all times.

Coordinate the temporary use of restrooms, wash rooms and smoking facilities with the General Contractor.

Protect all lawns, planting, trees, landscaping, walkways and drives from damage during construction. Any damage occurred is the responsibility of the Contractor. Repair to damaged items shall be repaired at the direction of the General Contractor and at the expense of the responsible party.

The Contractor shall not interrupt or interfere with the main building utilities, security nor operations.

The Contractor shall coordinate use of electricity and water with the General Contractor.

WORK SCHEDULE

Prior to beginning the work, the Contractor shall prepare and submit for the General Contractor's approval, a detailed work schedule and sequence of performance of all work, including a description of all construction activities, phases, proposed dates of utility tie-ins, anticipated duration of any utility outages and any specific tasks requiring overtime or weekend work.

The Contractor shall submit in writing to the General Contractor, request for utility tie-in, or utility outages 72 hours prior to anticipated work. The Contractor shall not proceed with any utility tie-in or utility outage until the written request is approved.

CLEAN UP

The Contractor shall clean up his work area and remove all debris from site daily.

CONTRACTOR SITE STORAGE

The Contractor shall coordinate all storage requirements with the General Contractor. The Contractor is responsible for receiving all delivered materials and immediately inventorying the delivery for accuracy. The Contractor shall immediately place all materials and equipment in the General Contractor's designated storage space, and provide weather protection, protection from physical damage and security.

DRAWINGS

The Drawings are diagrammatic and indicate the general arrangement of the systems. Drawings shall not be scaled. Field verify all existing conditions prior to ordering materials, fabrication of materials and prior to proceeding with the work.

Coordinate all mechanical work with the work of all trades to verify space availability where the equipment and materials are to be installed. Maintain maximum service clearances, space conditions, and adequate equipment access at all points. Where space conditions or equipment access appear inadequate, notify the General Contractor immediately and await direction prior to purchasing materials or equipment. Coordinate the layout of the Mechanical systems with the work of all trades.

Drawing details are provided for the Contractor's convenience, further information and coordination. Lack of a detail for a scheduled or specified item is not considered as relief for the Contractor not to perform the work under the base contract. The Contractor shall submit a Request For Information (RFI) should he require additional information for an installation detail.

PROTECTION

Protect work, materials and equipment against theft, injury and damage until finally inspected, tested and accepted. Carefully store all materials and equipment received on site which is not immediately installed. Close all open ends of work, including ductwork and piping, with temporary covers or plugs during storage and construction to prevent the entry of obstructing materials, dirt and debris.

Protect all areas during welding operations, including provisions for a fire watch and vision screen for personnel. Notify the General Contractor 24 hours prior to welding operations. Provide fire watch personnel and fire extinguishers during all welding or cutting operations. Welding in occupied buildings is prohibited without written prior approval from the Owner, Architect and Local Code Official.

SUPERINTENDENCE, QUALITY CONTROL AND INSPECTIONS

The Contractor is responsible for Superintendence and quality control for the installation of the Mechanical systems. The Contractor shall at all times provide experienced supervisory personnel on the job site to ensure the Mechanical systems installation is in strict compliance with the drawings, specifications and local codes. The Contractor is responsible for inspecting the work, performing and documenting the required tests and field coordination with the work of other trades and providing a complete and operational system.

Prior to final acceptance, all equipment and ductwork shall be operated and tested to ensure fully operational systems as specified and to the satisfaction of the Owner's representative. Written test reports shall be submitted to the Owner's representative for the following:

Certification of startup and complete operational and safety testing of all new Mechanical systems.

Air Conditioning Testing, Adjusting and Balancing report, of new mechanical systems and first floor Atrium PIU included in the scope of work.

Certification of systems operation noise and vibration free.

Certification of all control interlocks and emergency stop switches.

Ductwork systems shall circulate freely without noise, evidence of leaks or vibration.

Ductwork insulation for existing and new shall be inspected for leaks, damage to vapor barrier and weather tight installation. Any subsequent leaks found shall be repaired.

Defects and unacceptable performance demonstrated by the inspections and tests shall be corrected to the satisfaction of the Owner's representative at no additional cost to the Owner.

SCAFFOLDING, RIGGING AND HOISTING

The Contractor shall furnish all cranes, hoisting, rigging and scaffolding as necessary to facilitate the installation of the Mechanical systems. Remove same from premise immediately after use.

PAINTING

All painting shall be provided by the Contractor to match specified standards or existing adjacent surfaces. Touch up any marred surfaces or new equipment. Paint all miscellaneous new steel ductwork supports which are not galvanized steel. Sand and wire brush clean all surfaces prior to painting. Provide two coats of applicable, weather resistant paint. Coordinate colors and paint specifications with the Architectural conditions of the specifications.

CUTTING AND PATCHING

Provide all cutting and patching necessary for the installation of the work as specified herein. No existing structural members shall be cut without the approval of the Architect and the General Contractor and all such cutting shall be as directed by the Architect and General Contractor.

CLEANING, PURGING AND TESTING

All ductwork, piping and miscellaneous steel shall be cleaned of grease, oil, paint spots, metal cuttings, dust, rust, scale, mortar and other construction debris. Clean all Mechanical equipment and leave free of tool marks, dents, mars, scratches, cracks, chips and other defects. Paint to match adjacent surfaces.

Test all ductwork leak tight against the operational static pressure. Repair any noticeable leaks found. Leak tests shall be performed by the Contractor and witnessed by the Owner's representative.

Test, Adjust and Balance HVAC systems in the scope of work in accordance with Section 15990.

WARRANTY

Provide a written one year warranty for all labor, parts, materials and equipment from the date of beneficial occupancy as determined by the Architect.

CHANGES

Changes involving time and money, must conform to the General and Supplementary conditions of the Contract. No changes shall be initiated from verbal communication. No changes shall commence without written directive from the Architect and the General Contractor.

CONTRACT CONDITIONS

For conditions of the Contract, refer to the General Condition of the Contract for Construction, Standard Form of Agreement Between Owner and Contractor and Division 1 – General Requirements.

PRODUCTS

ACCESS DOORS – BUILDING

Coordinate number, size, style, and location of access doors with general construction work.

Size doors to provide adequate clearance for access

Normal door size is 24" x 24".

Access doors or panels in fire rated construction shall bear the manufacturer's UL listing and number for fire rating of the construction. Verify that the fire rating of the access door or panel is commensurate with the adjacent surfaces.

Provide access doors for items requiring servicing or replacing.

MATCHING PRODUCTS

Provide matching products where more than one item exists, even though other manufacturers are listed in the specifications. For instance, all ceiling diffusers are to be of the same manufacturer, all HVAC equipment of like types shall be of the same manufacturer, etc.

When in doubt of manufacturer acceptance, clarify prior to bid.

EXECUTION

GENERAL

Install all equipment and materials in strict accordance with the manufacturers' published (applicable) installation instructions. Provide one copy of the manufacturers' installation, and maintenance instructions, marked with the appropriate model numbers and accessories, with the Operation and Maintenance Manuals at project close out.

Provide wiring schematics and control wiring diagrams with the Operation and Maintenance manuals, including HVAC system controls and alarms.

Provide certificate of warranties.

Provide daily job site clean up to ensure a safe workplace.

Conform to the applicable standards and procedures outlined in 41 CFR Part 50-204 which requires Contractors to comply with the regulations and standards for construction outlined in the U.S. Department of Labor 29 CFR OSHA General Industry Standards and Regulations. All employees of the Contractor shall have one safety training session, specifically designed for the anticipated hazards of this project. Include weekly jobsite safety meets thereafter and document attendance. Conform to the General Contractor's published safety procedures and rules. Conform to OSHA 29 CFR 1910.147 Lockout/Tagout procedures. Provide MSDS sheets for any hazardous materials in accordance with OSHA 29 CFR 1910.1200.

COORDINATION OF INSTALLATION

Coordinate work under this Division with work under other Divisions.

Coordinate and schedule installation of ductwork, equipment, and piping as required to fit the work into the spaces provided in the building.

Arrange work to provide maximum headroom and clearance consistent with requirements of the documents, and in order to maintain adequate personnel passage, access and maintenance clearances.

Arrange parts of work requiring normal service to be readily accessible.

Provide supports and anchors for work to avoid damage from movement caused by dynamic forces or by expansion and contraction.

Arrange work to allow space for installation of insulation on equipment, piping, and ductwork.

Where cutting and repairing is required due to defective or ill-timed work under this Division, pay all costs for cutting and repairing.

Where work is installed above inaccessible ceilings or locations make provisions for items such as dampers, actuators, valves, control etc. to be made accessible by the installation of access panels or provide dampers, valves, controllers, etc. at another approved location which will facilitate the operational and service needs. One such example is provide duct equalizing grid and opposed blade damper at neck of ceiling diffuser where branch duct manual damper would be inaccessible.

Where the Mechanical Work is installed and other trades place materials and equipment that interfere with service access or encroach on the service clearances, the Mechanical Contractor is responsible for reporting each instance in writing to the General Contractor requesting corrections be made. Ductwork will have priority over piping or conduit

PROTECTION OF WORK DURING CONSTRUCTION

Provide protective covers, skids, plugs, caps, and coating to protect equipment, materials from damage and deterioration during construction.

Store equipment and material under cover and off the ground.

When outdoor storage is necessary, provide protective covers of sheet plastic of gauge suitable for the area involved and reinforced to withstand wind and precipitation. Set equipment and material on skids or platforms of height sufficient to avoid deterioration from splattering and ground water.

CLOSURE AND WEATHERPROOFING

Seal wall sleeves and floor penetrations with UL approved fire proof safing. Seal watertight and overlay with colored caulking to match adjacent surfaces where visible. Manufacturers: Metacaulk, 3M, GS Nelson. Fully comply with the manufacturers' installation instructions to achieve UL listed conditions.

Provide weather proof flashings and sealants for all roof and exterior wall penetrations.

Provide fire stopping, fire resistive sleeves and/or manufactured fire penetration fittings to maintain the required fire separation integrity of the vertical or horizontal fire separation. The Contractor shall include in his bid the necessary fire stopping, sleeves, fittings and devices to ensure complete compliance for all penetrations as required by the Local Authority Having Jurisdiction. Fire stopping products shall be UL listed and Labeled and shall be as manufactured by ProSet Systems or approved equal.

INSTALLATION - ACCESS OPENINGS IN ARCHITECTURAL SURFACES

Where work of this Division is located concealed in building construction and otherwise inaccessible, furnish access doors of adequate size and coordinate with general construction work to establish locations for access doors to be installed to provide access to the concealed work.

END OF SECTION 15000

SECTION 15762

CABINET UNIT HEATERS

GENERAL

SUMMARY

Section Includes:

Recessed wall cabinet unit heaters with centrifugal fans, electric-resistance heating coil(s) and exposed recessed panel with Unit-Mounted Fan Speed Switch and Wall-Mounted Dial Zone Sensor.

SUBMITTALS

Product Data: Include rated capacities, operating characteristics, furnished specialties, and accessories for each product indicated.

Shop Drawings: Detail equipment assemblies and indicate dimensions, weights, loads, required clearances, and method of field assembly, components, and location and size of each field connection.

Plans, elevations, sections, and details.
Location and size of each field connection.
Equipment schedules to include rated capacities, furnished specialties, and accessories.

Field quality-control test reports.

Operation and maintenance data.

QUALITY ASSURANCE

Unit capacities are in accordance with Industry Room Fan-Coil Air Conditioner Certification Program under ARI Standard 440-97. Safety: All standard units are UL listed and comply with NFPA90A requirements.

Electrical Components, Devices, and Accessories: Listed and labeled as defined in NFPA 70, Article 100, by a testing agency acceptable to authorities having jurisdiction, and marked for intended use.

ASHRAE/IESNA 90.1-2004 Compliance: Applicable requirements in ASHRAE/IESNA 90.1-2004, Section 6 - "Heating, Ventilating, and Air-Conditioning."

PRODUCTS

CABINET UNIT HEATERS

Manufacturers: Subject to compliance with requirements, provide products by one of the following:

Basis-of-Design Product: Subject to compliance with requirements, provide unit per schedule Trane Model# FF-N-B-030 or a comparable product by one of the following:

Carrier Corporation.
McQuay International.
Trane.
York

Description: A factory-assembled and -tested unit complying with ARI 440.

Comply with UL 2021.

Cabinet: Steel with baked-enamel finish with manufacturer's standard paint, in color selected by Architect. Standard finish meets ASTM B117 specifications (salt spray test).

Vertical Unit, Recessed with Exposed Front Panels: Minimum 18 gage steel construction, removable panels with channel-formed edges secured with tamperproof cam fasteners. The unit acoustically and thermally insulated with closed-cell insulation.
Recessing Flanges: Steel, finished to match cabinet.
Control Access Door: Key operated.

Filters: Minimum arrestance according to ASHRAE 52.1 and a minimum efficiency reporting value (MERV) according to ASHRAE 52.2.

Pleated: Easily removable 1" throwaway, MERV 8.

Electric-Resistance Heating Coil: Nickel-chromium heating wire, free from expansion noise and hum, mounted in ceramic inserts in a galvanized-steel housing; with fuses in terminal box for overcurrent protection and limit controls for high-temperature protection. Terminate elements in stainless-steel machine-staked terminals secured with stainless-steel hardware. Dual-stage electric heating coil is to be provided as the total source of heat. Electric heat coils are open-wire type. The electric heat operates at the same voltage as the unit, and with only a single power connection. Factory-mounted electric heat UL-listed and interlocked with the fan motor switch. A call for electric heat operation will turn the fan on. Motors controls are synchronized with fan operation to ensure safe operation and to ensure that two modes of heat are not operating simultaneously. Supply unit with a transformer to eliminate the need for field installation of a step-down transformer. Unit-mounted quiet magnetic relay for installation voltage. Unit to be equipped with a line-break high temperature cutout with automatic reset as an integral part of the elements to de-energize the electric heat in the event of a malfunction.

Fan and Motor Board: Removable.

Fan: Forward curved, double width, centrifugal; directly connected to motor. Thermoplastic or painted-steel wheels, and aluminum, painted-steel, or galvanized-steel fan scrolls.

Motor: Permanently lubricated, multispeed; resiliently mounted on motor board. Brushless DC (BLDC)/electronically commutated motors (ECM) factory programmed and run-tested in assembled units. The motor controller mounted in a touch-safe control box with a built-in integrated user interface and LED tachometer. Motor parameters can be adjusted through momentary contact switches accessible without factory service personnel on the motor control board. Motors to soft-ramp between speeds to lessen the acoustics due to sudden speed changes. Motor to be three speeds and have an integral thermal overload protection with a maximum ambient operating temperature of 104°F and be permanently lubricated. Motor to be capable of starting at 50 percent of rated voltage and operating at 90 percent of rated voltage on all speed settings. Motors should also be capable of operate up to 10 percent over voltage.

Wiring Terminations: Connect motor to chassis wiring to be plug connection.

Basic Unit Controls:

Control voltage transformer.

The fan speed switch with the control interface option to be unit-mount. The manual fan mode switch is to be a four-position switch (off, high, medium, low) allows manual fan mode selection.

The low-voltage fan speed option will provide an interface to factory wiring, including speed/high-medium-low (HML) control. The control box to contain a line voltage to 24-volt transformer, ECM motor controller, and an optional disconnect switch.

Wall-mounting thermostat with the following features.

Heat-off switch.
Fan on-auto switch.
Adjustable deadband.
Exposed set point.
Exposed indication.
Deg F indication.

Heating Coil Operations:

Occupied Periods: Energize electric-resistance coil to provide heating if room temperature falls below thermostat set point.

Unoccupied Periods: Start fan and energize electric-resistance coil if room temperature falls below setback temperature.

Electrical Connection: Factory wire motors and controls for a single field connection.

Capacities and Characteristics:

Cabinet:

Inverted Vertical, Fully Recessed: Downflow.

1) Air Inlet and Outlet: Front, punched louver inlet and punched louver outlet.

Fan:

Airflow: 300 cfm
High Speed: 1400 rpm
Motor Horsepower: 0.22

Heating Capacity:

Output: 1st Stage 1.5 KW & 2nd Stage 4.5 KW
Entering-Air Temperature: 68 deg F
Air-Temperature Rise: 40 deg F

Electric-Resistance Heating Coil:

Capacity: 4.5 kW
Number of Steps: 2

Filters:

Thickness: 1 inch pleated MERV 8

Electrical Characteristics for Single-Point Connection:

Volts: 208
Phase: 1
Hertz: 60
Full-Load Amperes: 22.8
Minimum Circuit Ampacity: 30

EXECUTION

INSTALLATION

Install unit heaters to comply with NFPA 90A.

Install wall-mounting thermostats at heights to match lighting controls. Verify location of thermostats and other exposed control sensors with Drawings and room details before installation.

Install new filters in each fan-coil unit within two weeks of Substantial Completion.

Comply with safety requirements in UL 1995.

Ground equipment according to Division 16 Section "Grounding and Bonding."

Connect wiring according to Division 16 Section "Conductors and Cables."

FIELD QUALITY CONTROL

Perform the following field tests and inspections and prepare test reports:

Operational Test: After electrical circuitry has been energized, start units to confirm proper motor rotation and unit operation.
Operate fan and electric heating elements through each stage to verify proper operation and electrical connections.
Test and adjust controls and safety devices. Replace damaged and malfunctioning controls and equipment.

Remove and replace malfunctioning units and retest as specified above.

PART 34 - END OF SECTION 15762

Copyright 1996, The American Institute of Architects (AIA)

SECTION 15820

DUCT ACCESSORIES

GENERAL

RELATED DOCUMENTS

Drawings and general provisions of the Contract, including General and Supplementary Conditions and Division 1 Specification Sections, apply to this Section.

SUMMARY

This Section includes the following:

Manual-volume dampers.
Duct-mounted access doors and panels.
Flexible ducts.
Duct accessory hardware.

Related Sections include the following:

Division 8 Section "Access Doors" for wall- and ceiling-mounted access doors and panels.
Division 15 Section "Diffusers, Registers, and Grilles."
Division 15 Section "Building Management System" for electric damper actuators.

SUBMITTALS

Product Data: For the following:

Manual-volume dampers.
Duct-mounted access doors and panels.
Flexible ducts.
Turning Vanes.

Product Certificates: Submit certified test data on dynamic insertion loss; self-noise power levels; and airflow performance data, static-pressure loss, dimensions, and weights.

QUALITY ASSURANCE

NFPA Compliance: Comply with the following NFPA standards:

NFPA 90A, "Installation of Air Conditioning and Ventilating Systems."
NFPA 90B, "Installation of Warm Air Heating and Air Conditioning Systems."

PRODUCTS

SHEET METAL MATERIALS

Galvanized, Sheet Steel: Lock-forming quality; ASTM A 653/A 653M, G90 coating designation; mill-phosphatized finish for surfaces of ducts exposed to view.

Extruded Aluminum: ASTM B 221, Alloy 6063, Temper T6.

Reinforcement Shapes and Plates: Galvanized steel reinforcement where installed on galvanized, sheet metal ducts; compatible materials for aluminum and stainless-steel ducts.

Tie Rods: Galvanized steel, 1/4-inch minimum diameter for 36-inch length or less; 3/8-inch minimum diameter for lengths longer than 36 inches.

MANUAL-VOLUME DAMPERS

General: Factory fabricated with required hardware and accessories. Stiffen damper blades for stability. Include locking device to hold single-blade dampers in a fixed position without vibration. Close duct penetrations for damper components to seal duct consistent with pressure class.

Pressure Classifications of 3-Inch wg or Higher: End bearings or other seals for ducts with axles full length of damper blades and bearings at both ends of operating shaft.

Standard Volume Dampers: single-blade design as indicated, standard leakage rating, and suitable for horizontal or vertical applications.

Steel Frames: Hat-shaped, galvanized, sheet steel channels, minimum of 0.064 inch thick, with mitered and welded corners; frames with flanges where indicated for attaching to walls; and flangeless frames where indicated for installing in ducts.
Roll-Formed Steel Blades: 0.064-inch- thick, galvanized, sheet steel.
Blade Axles: Galvanized steel.
Tie Bars and Brackets: Galvanized steel.

TURNING VANES

Fabricate to comply with SMACNA's "HVAC Duct Construction Standards--Metal and Flexible."

Manufactured Turning Vanes: Fabricate of 1-1/2-inch- wide, curved blades set 3/4 inch o.c.; support with bars perpendicular to blades set 2 inches o.c.; and set into side strips suitable for mounting in ducts.

Acoustic Turning Vanes: Fabricate of airfoil-shaped aluminum extrusions with perforated faces and fibrous-glass fill.

DUCT MOUNTED ACCESS DOORS AND PANELS

General: Fabricate doors and panels airtight and suitable for duct pressure class.

Frame: Galvanized, sheet steel, with bend-over tabs and foam gaskets.

Door: Double-wall, galvanized, sheet metal construction with insulation fill and thickness, and number of hinges and locks as indicated for duct pressure class. Include vision panel where indicated. Include 1-by-1-inch butt or piano hinge and cam latches.

Seal around frame attachment to duct and door to frame with neoprene or foam rubber.

Insulation: 1-inch- thick, fibrous-glass or polystyrene-foam board.

FLEXIBLE DUCTS

General: Comply with UL 181, Class 1.

Flexible Ducts, Insulated: Factory-fabricated, insulated, round duct, with an outer jacket enclosing 1-1/2-inch- thick, glass-fiber insulation around a continuous inner liner.

Reinforcement: Steel-wire helix encapsulated in inner liner.
Outer Jacket: Reinforced metalized film outer vapor barrier wrap.
Inner Liner: Polyethylene film.
Low Pressure Rating for secondary air application; 2-inch wg positive, 1/2-inch wg negative.

ACCESSORY HARDWARE

Instrument Test Holes: Cast iron or cast aluminum to suit duct material, including screw cap and gasket. Size to allow insertion of pitot tube and other testing instruments, and length to suit duct insulation thickness.

Splitter Damper Accessories: Zinc-plated damper blade bracket; 1/4-inch, zinc-plated operating rod; and a duct-mounted, ball-joint bracket with flat rubber gasket and square-head set screw.

Flexible Duct Clamps: Stainless-steel band with cadmium-plated hex screw to tighten band with a worm-gear action, in sizes 3 to 18 inches to suit duct size.

Adhesives: High strength, quick setting, neoprene based, waterproof, and resistant to gasoline and grease.

EXECUTION

INSTALLATION

Install duct accessories according to applicable details shown in SMACNA's "HVAC Duct Construction Standards--Metal and Flexible" for metal ducts and NAIMA's "Fibrous Glass Duct Construction Standards" for fibrous-glass ducts.

Install volume dampers in lined duct; avoid damage to and erosion of duct liner.

Provide test holes at fan inlet and outlet and elsewhere as indicated.

Install ceiling access panels in hard ceilings to access volume dampers, fire dampers, duct electric heater, turning vanes, and equipment.

ADJUSTING

Adjust duct accessories for proper settings.

Final positioning of manual-volume dampers is specified in Division 15 Section "Testing, Adjusting, and Balancing."

END OF SECTION

SECTION 15855

DIFFUSERS, REGISTERS, AND GRILLES

GENERAL

RELATED DOCUMENTS

Drawings and general provisions of the Contract, including General and Supplementary Conditions and Division 1 Specification Sections, apply to this Section.

SUMMARY

This Section includes ceiling diffusers, registers, and grilles.

Related Sections include the following:

- Division 15 Section "Duct Accessories" volume-control dampers not integral to diffusers, registers, and grilles.
- Division 15 Section "Testing, Adjusting, and Balancing" for balancing diffusers, registers, and grilles.

DEFINITIONS

Diffuser: Square air distribution outlet, generally located in the ceiling and comprised of deflecting members discharging supply air in various directions and planes and arranged to promote mixing of primary air with secondary room air.

Grille: A louvered or perforated covering for an opening in an air passage, which can be located in a sidewall, ceiling, or floor.

Register: A combination grille and damper assembly over an air opening.

SUBMITTALS

Product Data: For each model indicated, include the following:

- Data Sheet: For each type of air outlet and inlet, and accessory furnished; indicate construction, finish, and mounting details.
- Performance Data: Include throw and drop, static-pressure drop, and noise ratings for each type of air outlet and inlet.
- Schedule of diffusers, registers, and grilles indicating drawing designation, room location, quantity, model number, size, and accessories furnished.
- Assembly Drawing: For each type of air outlet and inlet; indicate materials and methods of assembly of components.

QUALITY ASSURANCE

Product Options: Drawings and schedules indicate specific requirements of diffusers, registers, and grilles and are based on the specific requirements of the systems indicated. Other manufacturers' products with equal performance characteristics may be considered. Refer to Division 1 Section "Substitutions."

NFPA Compliance: Install diffusers, registers, and grilles according to NFPA 90A, "Standard for the Installation of Air-Conditioning and Ventilating Systems."

PRODUCTS

MANUFACTURED UNITS

Diffusers, registers, and grilles are scheduled on Drawings.

Products: Subject to compliance with requirements, provide one of the following:

a. Titus. (Basis of Design)
b. Air Systems Components; Krueger Div.
c. Price Industries.
d. Ruskin Company

AIR DISTRIBUTION DEVICES

Air distribution devices shall be constructed of aluminum. See the Air Distribution Device schedule for the size and description of the air distribution devices.

Return mounted grilles shall be 3/16" diameter holes on 1/4" staggered. Frame shall be aluminum with baked off-white finish.

Square ceiling diffuser shall be ceiling mounted, constructed of extruded aluminum with baked-off white enamel finish. Diffuser shall be multi-blade, fixed louver type furnished in four-way air diffusion. Diffuser shall be complete with an opposed blade damper.

Diffusers, registers, and grilles manual volume dampers shall be opposed blade type furnished complete with locking lever and quadrant with, stand-off mounting brackets.

SOURCE QUALITY CONTROL

Testing: Test performance according to ASHRAE 70, "Method of Testing for Rating the Performance of Air Outlets and Inlets."

EXECUTION

EXAMINATION

Examine areas where diffusers, registers, and grilles are to be installed/replaced for compliance with requirements for installation tolerances and other conditions affecting performance of equipment. Do not proceed with installation until unsatisfactory conditions have been corrected.

INSTALLATION

Install diffusers, registers, grilles and louver plumb, according to manufacturer's written instructions, Coordination Drawings, original design, and referenced standards.

Ceiling-Mounted Outlets and Inlets: Drawings indicate general arrangement of ducts, fittings, and accessories. Air outlet and inlet locations have been indicated to achieve design requirements for air volume, noise criteria, airflow pattern, throw, and pressure drop. Make final locations where indicated, as much as practicable. Where architectural features or other items conflict with installation, notify Architect for a determination of final location.

Install diffusers, registers, and grilles with airtight connection to flexible ducts and to allow service and maintenance of dampers, air extractors, and/or fire dampers. Ceiling mounted diffusers and grilles shall be connected with flex duct not to exceed 5 foot length.

ADJUSTING

After installation, adjust diffusers, registers, and grilles to air patterns indicated, or as directed, before starting air balancing.

CLEANING

After installation of diffusers, registers, and grilles, inspect exposed finish. Clean exposed surfaces to remove burrs, dirt, and smudges. Replace diffusers, registers, and grilles that have damaged finishes.

END OF SECTION 15855

SECTION 15990

TESTING, ADJUSTING, AND BALANCING

GENERAL

RELATED DOCUMENTS

Drawings and general provisions of the Contract, including General and Supplementary Conditions and Division 1 Specification Sections, apply to this Section.

SUMMARY

This Section includes testing, adjusting, and balancing HVAC systems to produce design objectives, including the following:

Balancing airflow and electric heating for existing PIU-1.8.
Balance airflow for existing SF-2.
Balance airflow for new wall mounted UH-1.
Adjusting indicated HVAC Terminals to provide indicated quantities.
Verify associated automatic control devices are functioning properly.
Reporting results of the activities and procedures specified in this Section.

Related Sections include the following:

Testing and adjusting requirements unique to particular systems and equipment are included in the Sections that specify those systems and equipment.
Field quality-control testing to verify that workmanship quality for system and equipment installation.

DEFINITIONS

Adjust: To regulate fluid flow rate and air patterns at the terminal equipment, such as to reduce fan speed or adjust a damper.

Balance: To proportion flows within the distribution system, including submains, branches, and terminals, according to design quantities.

Draft: A current of air, when referring to localized effect caused by one or more factors of high air velocity, low ambient temperature, or direction of airflow, whereby more heat is withdrawn from a person's skin than is normally dissipated.

Procedure: An approach to and execution of a sequence of work operations to yield repeatable results.

Report Forms: Test data sheets for recording test data in logical order.

Static Head: The pressure due to the weight of the fluid above the point of measurement. In a closed system, static head is equal on both sides of the pump.

Suction Head: The height of fluid surface above the centerline of the pump on the suction side.

System Effect: A phenomenon that can create undesired or unpredicted conditions that cause reduced capacities in all or part of a system.

System Effect Factors: Allowances used to calculate a reduction of the performance ratings of a fan when installed under conditions different from those presented when the fan was performance tested.

Terminal: A point where the controlled medium, such as fluid or energy, enters or leaves the distribution system.

Test: A procedure to determine quantitative performance of a system or equipment.

Testing, Adjusting, and Balancing Agent: The entity responsible for performing and reporting the testing, adjusting, and balancing procedures.

AABC: Associated Air Balance Council.

AMCA: Air Movement and Control Association.

NEBB: National Environmental Balancing Bureau.

SMACNA: Sheet Metal and Air Conditioning Contractors' National Association.

SUBMITTALS

Quality-Assurance Submittals: After Contractor's Notice to Proceed, submit 2 copies of evidence that the testing, adjusting, and balancing Agent and this Project's testing, adjusting, and balancing team members meet the qualifications specified in the "Quality Assurance" Article below.

Certified Testing, Adjusting, and Balancing Reports: Submit 2 copies of reports prepared, as specified in this Section, on approved forms certified by the testing, adjusting, and balancing Agent.

Warranty: Submit 2 copies of special warranty specified in the "Warranty" Article below.

QUALITY ASSURANCE

Agent Qualifications: Engage a testing, adjusting, and balancing agent certified by either AABC or NEBB.

Certification of Testing, Adjusting, and Balancing Reports: Certify the testing, adjusting, and balancing field data reports. This certification includes the following:

Review field data reports to validate accuracy of data and to prepare certified testing, adjusting, and balancing reports.

Certify that the testing, adjusting, and balancing team complied with the approved testing, adjusting, and balancing plan and the procedures specified and referenced in this Specification.

Testing, Adjusting, and Balancing Reports: Use standard forms from AABC's "National Standards for Testing, Adjusting, and Balancing." Or use testing, adjusting, and balancing Agent's standard forms approved by the Architect.

Instrumentation Type, Quantity, and Accuracy: As described in AABC national standards.

Instrumentation Calibration: Calibrate instruments at least every 6 months or more frequently if required by the instrument manufacturer.

COORDINATION

Coordinate the efforts of factory-authorized service representatives for systems and/or equipment, HVAC controls installers, and other mechanics to operate HVAC systems and equipment to support and assist testing, adjusting, and balancing activities.

Notice: Provide 7 days' advance notice for each test. Include scheduled test dates and times.

WARRANTY

General Warranty: The national project performance guarantee specified in this Article shall not deprive the Owner of other rights the Owner may have under other provisions of the Contract Documents and shall be in addition to, and run concurrent with, other warranties made by the Contractor under requirements of the Contract Documents.

National Project Performance Guarantee: Provide a guarantee on AABC'S "National Standards" forms stating that AABC will assist in completing the requirements of the Contract Documents if the testing, adjusting, and balancing Agent fails to comply with the Contract Documents. Guarantee includes the following provisions:

The certified Agent has tested and balanced systems according to the Contract Documents.

Systems are balanced to optimum performance capabilities within design and installation limits.

PRODUCTS (Not Applicable)

EXECUTION

EXAMINATION

Examine Contract Documents to become familiar with project requirements and to discover conditions in systems' designs that may preclude proper testing, adjusting, and balancing of systems and equipment.

Contract Documents are defined in the General and Supplementary Conditions of the Contract.

Verify that balancing devices, such as test ports, gage cocks, thermometer wells, flow-control devices, balancing valves and fittings, and manual volume dampers, are required by the Contract Documents. Verify that quantities and locations of these balancing devices are accessible and appropriate for effective balancing and for efficient system and equipment operation.

Examine approved submittal data of HVAC systems and equipment.

Examine project record documents described in Division 1 Section "Project Record Documents."

Examine Architect's and Engineer's design data, including HVAC system descriptions, statements of design assumptions for environmental conditions and systems' output, and statements of philosophies and assumptions about HVAC system and equipment controls.

Examine equipment performance data, including fan curves. Relate performance data to project conditions and requirements, including system effects that can create undesired or unpredicted conditions that cause reduced capacities in all or part of a system. Calculate system effect factors to reduce the performance ratings of HVAC equipment when installed under conditions different from those presented when the equipment was performance tested at the factory. To calculate system effects for air systems, use tables and charts found in AMCA 201, "Fans and Systems," Sections 7 through 10; or in SMACNA's "HVAC Systems--Duct Design," Sections 5 and 6. Compare this data with the design data and installed conditions.

Examine system and equipment installations to verify that they are complete and that testing, cleaning, adjusting, and commissioning specified in individual Specification Sections have been performed.

Examine system and equipment test reports.

Examine HVAC system and equipment installations to verify that indicated balancing devices, such as test ports, gage cocks, thermometer wells, flow-control devices, electrical relays, and manual volume dampers, are properly installed, and their locations are accessible and appropriate for effective balancing and for efficient system and equipment operation.

Examine systems for functional deficiencies that cannot be corrected by adjusting and balancing.

Examine terminal unit, such as variable-air-volume box, to verify that they are accessible and the control are connected and functioning.

Examine plenums, utilized for supply air, to verify that they are airtight.

Examine heat-transfer coil(s) for correct wiring connections and cleanliness.

Examine equipment for installation and for properly operating safety interlocks and controls.

Examine automatic temperature system components to verify the following:

Damper(s) and other controlled devices operate by the intended controller.
Damper(s) are in the position indicated by the controller.
Integrity of damper(s) for free and full operation and for tightness of fully closed and fully open positions for the variable-air-volume terminal.
Automatic modulating dampers are properly connected.
Thermostats are located to avoid adverse effects of sunlight, drafts, and cold walls.
Sensors are located to sense only the intended conditions.
Sequence of operation for control modes is according to the Contract Documents.
Controller set points are set at design values. Record default set points if different from design values.
Interlocked systems are operating.
Changeover from heating to cooling mode occurs according to design values.

Report deficiencies discovered before and during performance of testing, adjusting, and balancing procedures.

PREPARATION

Prepare a testing, adjusting, and balancing plan that includes strategies and step-by-step procedures.

Complete system readiness checks and prepare system readiness reports. Verify the following:

Permanent electrical power wiring is complete.
Automatic temperature-control systems are operational.
Equipment and duct access doors are securely closed.
Balance, smoke, and fire dampers are open.
Control relays/switches are operational.

GENERAL TESTING AND BALANCING PROCEDURES

Perform testing and balancing procedures on each system according to the procedures contained in AABC national standards and this Section.

Cut insulation, ducts, pipes, and equipment cabinets for installation of test probes to the minimum extent necessary to allow adequate performance of procedures. After testing and balancing, close probe holes and patch insulation with new materials identical to those removed. Restore vapor barrier and finish according to the insulation Specifications for this Project.

Mark equipment settings with paint or other suitable, permanent identification material, including damper-control positions, valve indicators, fan-speed-control levers, and similar controls and devices, to show final settings.

FUNDAMENTAL AIR SYSTEMS' BALANCING PROCEDURES

Prepare test reports for both fans and outlets. Obtain manufacturer's outlet factors and recommended testing procedures. Crosscheck the summation of required outlet volumes with required fan volumes.

Determine the best locations in main duct for accurate duct airflow measurements.

Locate start-stop and disconnect switches, electrical interlocks, and motor starters.

Verify that motor starters are equipped with properly sized thermal protection.

Check dampers for proper position to achieve desired airflow path.

Check for airflow blockages.

Check for proper sealing of Terminal unit components.

AIR SYSTEMS' BALANCING PROCEDURES

The procedures in this Article apply to constant and variable-volume supply and return air systems. Additional procedures might be required for variable-air-volume and induction-unit supply-air systems.

Adjust fans to deliver total design airflows within the maximum allowable rpm listed by the fan manufacturer.

Measure fan static pressures to determine actual static pressure as follows:

a. Measure outlet static pressure as far downstream from the fan as practicable and upstream from restrictions in ducts such as elbows and transitions.

b. Measure static pressure directly at the fan outlet or through the flexible connection.

Compare design data with installed conditions to determine variations in design static pressures versus actual static pressures. Compare actual system effect factors with calculated system effect factors to identify where variations occur. Recommend corrective action to align design and actual conditions.

Adjust fan speed higher or lower than design with the approval of the Architect. Make required adjustments to pulley sizes, motor sizes, and electrical connections to accommodate fan-speed changes (if applicable).

Do not make fan-speed adjustments that result in motor overload. Consult equipment manufacturers about fan-speed safety factors. Modulate dampers and measure fan-motor amperage to ensure no overload will occur. Measure amperage in full

cooling, full heating, and economizer modes to determine the maximum required brake horsepower.

Adjust volume dampers for main duct, submain ducts, and major branch ducts to design airflows within specified tolerances.

Adjust terminal outlets and inlets for each space to design airflows within specified tolerances of design values. Make adjustments using volume dampers rather than extractors and the dampers at the air terminals.

Adjust each outlet in the same room or space to within specified tolerances of design quantities without generating noise levels above the limitations prescribed by the Contract Documents.
Adjust patterns of adjustable outlets for proper distribution without drafts.

TEMPERATURE-CONTROL VERIFICATION

Check transmitter and controller locations and note conditions that would adversely affect control functions.

Record controller settings and note variances between set points and actual measurements.

Verify operation of limiting controllers (i.e., high- and low-temperature controllers).

Verify free travel and proper operation of control devices such as damper operators.

Verify sequence of operation of the Terminal control devices. Note air pressures and device positions and correlate with airflow and water-flow measurements. Note the speed of response to input changes.

Confirm interaction of electrically operated switch transducers.

Confirm interaction of interlock and lockout systems.

Note operation of electric actuators using spring return for proper fail-safe operations.

TOLERANCES

Set HVAC system airflow and water flow rates within the following tolerances:

Supply, Return, and Exhaust Fans: Plus 5 to plus 10 percent.
Air Outlets and Inlets: 0 to minus 10 percent.

REPORTING

Status Reports: As Work progresses, prepare reports to describe completed procedures, procedures in progress, and scheduled procedures. Include a list of deficiencies and problems found in systems being tested and balanced.

FINAL REPORT

General: Typewritten, or computer printout in letter-quality font, on standard paper, in 3-ring binder, tabulated and divided into sections by tested and balanced systems.

Include a certification sheet in front of binder signed and sealed by the certified testing and balancing engineer.

Include a list of the instruments used for procedures, along with proof of calibration.

Final Report Contents: In addition to the certified field report data, include the following:

Fan curves.
Field test reports prepared by system and equipment installers.
Other information relative to equipment performance, but do not include approved Shop Drawings and Product Data.

General Report Data: In addition to the form titles and entries, include the following data in the final report, as applicable:

Title page.
Name and address of testing, adjusting, and balancing Agent.
Project name.
Project location.
Architect's name and address.
Engineer's name and address.
Contractor's name and address.
Report date.
Signature of testing, adjusting, and balancing Agent who certifies the report.
Summary of contents, including the following:

c. Design versus final performance.
d. Notable characteristics of systems.
e. Description of system operation sequence if it varies from the Contract Documents.

Nomenclature sheets for each item of equipment.
Data for terminal units, including manufacturer, type size, and fittings.
Notes to explain why certain final data in the body of reports vary from design values.

Fan Test Reports: For supply, return, and exhaust fans, include the following:

Fan Data: Include the following:

f. System identification.
g. Location.
h. Make and type.
i. Model number and size.
j. Manufacturer's serial number.
k. Arrangement and class.
l. Sheave make, size in inches (mm), and bore.

m. Sheave dimensions, center-to-center and amount of adjustments in inches (mm).

Motor Data: Include the following:

n. Make and frame type and size.
o. Horsepower and rpm.
p. Volts, phase, and hertz.
q. Full-load amperage and service factor.
r. Sheave make, size in inches (mm), and bore.
s. Sheave dimensions, center-to-center and amount of adjustments in inches (mm).
t. Number of belts, make, and size.

Test Data: Include design and actual values for the following:

u. Total airflow rate in cfm (L/s).
v. Total system static pressure in inches wg (Pa).
w. Fan rpm.
x. Discharge static pressure in inches wg (Pa).
y. Suction static pressure in inches wg (Pa).

Air-Terminal-Device Reports: For terminal units, include the following:

Unit Data: Include the following:

z. System and air-handling unit identification.
aa. Location and zone.
bb. Test apparatus used.
cc. Area served.
dd. Air-terminal-device make.
ee. Air-terminal-device number from system diagram.
ff. Air-terminal-device type and model number.
gg. Air-terminal-device size.

Test Data: Include design and actual values for the following:

hh. Airflow rate in cfm (L/s).
ii. Air velocity in fpm (m/s).
jj. Preliminary airflow rate as needed in cfm (L/s).
kk. Preliminary velocity as needed in fpm (m/s).
ll. Final airflow rate in cfm (L/s).
mm. Final velocity in fpm (m/s).
nn. Space temperature in deg F (deg C).

System-Coil Reports: For reheat coils of terminal units, include the following:

Unit Data: Include the following:

oo. System and air-handling unit identification.
pp. Location and zone.

qq. Room or riser served.
rr. Coil make and size.
ss. Heating Element KW.

Test Data: Include design and actual values for the following:

tt. Airflow rate in cfm (L/s).
uu. Entering-water temperature in deg F (deg C).
vv. Leaving-water temperature in deg F (deg C).
ww. Entering-air temperature in deg F (deg C).
xx. Leaving-air temperature in deg F (deg C).

END OF SECTION

SECTION 16060

GROUNDING AND BONDING

PART 35 - GENERAL

35.1 SUMMARY

A. Section Includes: Grounding systems and equipment.

35.2 SUBMITTALS

A. Product Data: For each type of product indicated.

B. Field quality-control reports.

35.3 QUALITY ASSURANCE

A. Electrical Components, Devices, and Accessories: Listed and labeled as defined in NFPA 70, by a qualified testing agency, and marked for intended location and application.

B. Comply with UL 467 for grounding and bonding materials and equipment.

PART 36 - PRODUCTS

36.1 CONDUCTORS

A. Insulated Conductors: Copper wire or cable insulated for 600 V unless otherwise required by applicable Code or authorities having jurisdiction.

B. Bare Copper Conductors:

1. Solid Conductors: ASTM B 3.
2. Stranded Conductors: ASTM B 8.
3. Tinned Conductors: ASTM B 33.

36.2 CONNECTORS

A. Listed and labeled by an NRTL acceptable to authorities having jurisdiction for applications in which used and for specific types, sizes, and combinations of conductors and other items connected.

B. Bolted Connectors for Conductors and Pipes: Copper or copper alloy, pressure type with at least two bolts.

1. Pipe Connectors: Clamp type, sized for pipe.

C. Welded Connectors: Exothermic-welding kits of types recommended by kit manufacturer for materials being joined and installation conditions.

PART 37 - EXECUTION

37.1 APPLICATIONS

A. Conductors: Install solid conductor for No.8 AWG and smaller, and stranded conductors for No. 6 AWG and larger unless otherwise indicated.

B. Isolated Grounding Conductors: Green-colored insulation with continuous yellow stripe. On feeders with isolated ground, identify grounding conductor where visible to normal inspection, with alternating bands of green and yellow tape, with at least three bands of green and two bands of yellow.

C. Conductor Terminations and Connections:

1. Pipe and Equipment Grounding Conductor Terminations: Bolted connectors.
2. Connections to Structural Steel: Bolted/Welded connectors.

37.2 EQUIPMENT GROUNDING

A. Install insulated equipment grounding conductors with the following items, in addition to those required by NFPA 70:

1. Feeders and branch circuits.
2. Lighting circuits.
3. Receptacle circuits.
4. Single-phase motor and appliance branch circuits.
5. Three-phase motor and appliance branch circuits.
6. Flexible raceway runs.
7. Armored and metal-clad cable runs.

B. Air-Duct Equipment Circuits: Install insulated equipment grounding conductor to duct-mounted electrical devices operating at 120 V and more, including air cleaners, heaters, dampers, humidifiers, and other duct electrical equipment. Bond conductor to each unit and to air duct and connected metallic piping.

C. Signal and Communication Equipment: In addition to grounding and bonding required by NFPA 70, provide a separate grounding system complying with requirements in TIA/ATIS J-STD-607-A.

1. For telephone, alarm, voice and data, and other communication equipment, provide No. 4 AWG minimum insulated grounding conductor in raceway from

grounding electrode system to each service location, terminal cabinet, wiring closet, and central equipment location.

2. Service and Central Equipment Locations and Wiring Closets: Terminate grounding conductor on a 1/4-by-4-by-12-inch (6.3-by-100-by-300-mm) grounding bus.
3. Terminal Cabinets: Terminate grounding conductor on cabinet grounding terminal.

37.3 INSTALLATION

A. Grounding Conductors: Route along shortest and straightest paths possible unless otherwise indicated or required by Code. Avoid obstructing access or placing conductors where they may be subjected to strain, impact, or damage.

B. Bonding Interior Metal Ducts: Bond metal air ducts to equipment grounding conductors of associated fans, blowers, electric heaters, and air cleaners. Install tinned bonding jumper to bond across flexible duct connections to achieve continuity.

37.4 LABELING

A. Comply with requirements in Division16 Section "Electrical Identification" Article for instruction signs. The label or its text shall be green.

B. Install labels at the telecommunications bonding conductor and grounding equalizer and at the grounding electrode conductor where exposed.

1. Label Text: "If this connector or cable is loose or if it must be removed for any reason, notify the facility manager."

37.5 FIELD QUALITY CONTROL

A. Perform the following tests and inspections and prepare test reports:

1. After installing grounding system but before permanent electrical circuits have been energized, test for compliance with requirements.
2. Inspect physical and mechanical condition. Verify tightness of accessible, bolted, electrical connections with a calibrated torque wrench according to manufacturer's written instructions.
3. Test completed grounding system at each location where a maximum ground-resistance level is specified, at service disconnect enclosure grounding terminal, and at ground test wells. Make tests at ground rods before any conductors are connected.

END OF SECTION 16060

SECTION 16073

HANGERS AND SUPPORTS FOR ELECTRICAL SYSTEMS

PART 38 - GENERAL

38.1 SUMMARY

A. Section includes:

1. Hangers and supports for electrical equipment and systems.
2. Construction requirements for concrete bases.

38.2 PERFORMANCE REQUIREMENTS

A. Delegated Design: Design supports for multiple raceways, including comprehensive engineering analysis by a qualified professional engineer, using performance requirements and design criteria indicated.

B. Design supports for multiple raceways capable of supporting combined weight of supported systems and its contents.

C. Design equipment supports capable of supporting combined operating weight of supported equipment and connected systems and components.

D. Rated Strength: Adequate in tension, shear, and pullout force to resist maximum loads calculated or imposed for this Project, with a minimum structural safety factor of five times the applied force.

38.3 SUBMITTALS

A. Product Data: For steel slotted support systems.

B. Shop Drawings: Show fabrication and installation details and include calculations for the following:

1. Trapeze hangers. Include Product Data for components.
2. Steel slotted channel systems. Include Product Data for components.
3. Equipment supports.

C. Welding certificates.

38.4 QUALITY ASSURANCE

A. Welding: Qualify procedures and personnel according to AWS D1.1/D1.1M, "Structural Welding Code - Steel."

B. Comply with NFPA 70.

PART 39 - PRODUCTS

39.1 SUPPORT, ANCHORAGE, AND ATTACHMENT COMPONENTS

A. Steel Slotted Support Systems: Comply with MFMA-4, factory-fabricated components for field assembly.

1. Available Manufacturers: Subject to compliance with requirements, manufacturers offering products that may be incorporated into the Work include, but are not limited to, the following:
2. Manufacturers: Subject to compliance with requirements, provide products by one of the following:

    a. Allied Tube & Conduit.
    b. Cooper B-Line, Inc.; a division of Cooper Industries.
    c. ERICO International Corporation.
    d. GS Metals Corp.
    e. Thomas & Betts Corporation.
    f. Unistrut; Tyco International, Ltd.
    g. Wesanco, Inc.

3. Metallic Coatings: Hot-dip galvanized after fabrication and applied according to MFMA-4.
4. Nonmetallic Coatings: Manufacturer's standard PVC, polyurethane, or polyester coating applied according to MFMA-4.
5. Painted Coatings: Manufacturer's standard painted coating applied according to MFMA-4.
6. Channel Dimensions: Selected for applicable load criteria.

B. Raceway and Cable Supports: As described in NECA 1 and NECA 101.

C. Conduit and Cable Support Devices: Steel hangers, clamps, and associated fittings, designed for types and sizes of raceway or cable to be supported.

D. Support for Conductors in Vertical Conduit: Factory-fabricated assembly consisting of threaded body and insulating wedging plug or plugs for non-armored electrical conductors or cables in riser conduits. Plugs shall have number, size, and shape of conductor gripping pieces as required to suit individual conductors or cables supported. Body shall be malleable iron.

E. Structural Steel for Fabricated Supports and Restraints: ASTM A 36/A 36M, steel plates, shapes, and bars; black and galvanized.

F. Mounting, Anchoring, and Attachment Components: Items for fastening electrical items or their supports to building surfaces include the following:

1. Powder-Actuated Fasteners: Threaded-steel stud, for use in hardened portland cement concrete, steel, or wood, with tension, shear, and pullout capacities appropriate for supported loads and building materials where used.

    a. Available Manufacturers: Subject to compliance with requirements, manufacturers offering products that may be incorporated into the Work include, but are not limited to, the following:
    b. Manufacturers: Subject to compliance with requirements, provide products by one of the following:

        1) Hilti Inc.
        2) ITW Ramset/Red Head; a division of Illinois Tool Works, Inc.
        3) MKT Fastening, LLC.
        4) Simpson Strong-Tie Co., Inc.; Masterset Fastening Systems Unit.

2. Mechanical-Expansion Anchors: Insert-wedge-type, zinc-coated steel, for use in hardened portland cement concrete with tension, shear, and pullout capacities appropriate for supported loads and building materials in which used.

    a. Available Manufacturers: Subject to compliance with requirements, manufacturers offering products that may be incorporated into the Work include, but are not limited to, the following:
    b. Manufacturers: Subject to compliance with requirements, provide products by one of the following:

        1) Cooper B-Line, Inc.; a division of Cooper Industries.
        2) Empire Tool and Manufacturing Co., Inc.
        3) Hilti Inc.
        4) ITW Ramset/Red Head; a division of Illinois Tool Works, Inc.
        5) MKT Fastening, LLC.

3. Concrete Inserts: Steel or malleable-iron, slotted support system units similar to MSS Type 18; complying with MFMA-4 or MSS SP-58.
4. Clamps for Attachment to Steel Structural Elements: MSS SP-58, type suitable for attached structural element.
5. Through Bolts: Structural type, hex head, and high strength. Comply with ASTM A 325.
6. Toggle Bolts: All-steel springhead type.
7. Hanger Rods: Threaded steel.

39.2 FABRICATED METAL EQUIPMENT SUPPORT ASSEMBLIES

A. Description: Welded or bolted, structural-steel shapes, shop or field fabricated to fit dimensions of supported equipment.

B. Materials: Comply with requirements in Division 5 Section "Metal Fabrications" for steel shapes and plates.

PART 40 - EXECUTION

40.1 APPLICATION

A. Comply with NECA 1 and NECA 101 for application of hangers and supports for electrical equipment and systems except if requirements in this Section are stricter.

B. Maximum Support Spacing and Minimum Hanger Rod Size for Raceway: Space supports for EMT, IMC, and RMC as required by NFPA 70. Minimum rod size shall be 1/4 inch (6 mm) in diameter.

C. Multiple Raceways or Cables: Install trapeze-type supports fabricated with steel slotted or other support system, sized so capacity can be increased by at least 25 percent in future without exceeding specified design load limits.

1. Secure raceways and cables to these supports with two-bolt conduit clamps.

D. Spring-steel clamps designed for supporting single conduits without bolts may be used for 1-1/2-inch (38-mm) and smaller raceways serving branch circuits and communication systems above suspended ceilings and for fastening raceways to trapeze supports.

40.2 SUPPORT INSTALLATION

A. Comply with NECA 1 and NECA 101 for installation requirements except as specified in this Article.

B. Raceway Support Methods: In addition to methods described in NECA 1, EMT may be supported by openings through structure members, as permitted in NFPA 70.

C. Strength of Support Assemblies: Where not indicated, select sizes of components so strength will be adequate to carry present and future static loads within specified loading limits. Minimum static design load used for strength determination shall be weight of supported components plus 200 lb (90 kg).

D. Mounting and Anchorage of Surface-Mounted Equipment and Components: Anchor and fasten electrical items and their supports to building structural elements by the following methods unless otherwise indicated by code:

1. To Wood: Fasten with lag screws or through bolts.
2. To New Concrete: Bolt to concrete inserts.
3. To Masonry: Approved toggle-type bolts on hollow masonry units and expansion anchor fasteners on solid masonry units.
4. To Existing Concrete: Expansion anchor fasteners.
5. Instead of expansion anchors, powder-actuated driven threaded studs provided with lock washers and nuts may be used in existing standard-weight concrete 4 inches (100 mm) thick or greater. Do not use for anchorage to lightweight-aggregate concrete or for slabs less than 4 inches (100 mm) thick.

6. To Steel: Beam clamps (MSS Type 19, 21, 23, 25, or 27) complying with MSS SP-69 To Light Steel: Sheet metal screws.
7. Items Mounted on Hollow Walls and Nonstructural Building Surfaces: Mount cabinets, panelboards, disconnect switches, control enclosures, pull and junction boxes, transformers, and other devices on slotted-channel racks attached to substrate by means that meet seismic-restraint strength and anchorage requirements.

E. Drill holes for expansion anchors in concrete at locations and to depths that avoid reinforcing bars.

40.3 INSTALLATION OF FABRICATED METAL SUPPORTS

A. Comply with installation requirements in Division 5 Section "Metal Fabrications" for site-fabricated metal supports.

B. Cut, fit, and place miscellaneous metal supports accurately in location, alignment, and elevation to support and anchor electrical materials and equipment.

C. Field Welding: Comply with AWS D1.1/D1.1M.

40.4 PAINTING

A. Touchup: Clean field welds and abraded areas of shop paint. Paint exposed areas immediately after erecting hangers and supports. Use same materials as used for shop painting. Comply with SSPC-PA 1 requirements for touching up field-painted surfaces.

1. Apply paint by brush or spray to provide minimum dry film thickness of 2.0 mils (0.05 mm).

B. Touchup: Comply with requirements in Division 9 painting Sections for cleaning and touchup painting of field welds, bolted connections, and abraded areas of shop paint on miscellaneous metal.

C. Galvanized Surfaces: Clean welds, bolted connections, and abraded areas and apply galvanizing-repair paint to comply with ASTM A 780.

END OF SECTION 16073

Copyright 2006 by The American Institute of Architects (AIA)

SECTION 16075

ELECTRICAL IDENTIFICATION

PART 41 - GENERAL

41.1 SUMMARY

A. Section Includes:

1. Identification for raceways.
2. Identification of power and control cables.
3. Identification for conductors.
4. Underground-line warning tape.
5. Warning labels and signs.
6. Instruction signs.
7. Equipment identification labels.
8. Miscellaneous identification products.

41.2 SUBMITTALS

A. Product Data: For each electrical identification product indicated.

41.3 QUALITY ASSURANCE

A. Comply with ANSI A13.1.

B. Comply with NFPA 70.

C. Comply with 29 CFR 1910.144 and 29 CFR 1910.145.

D. Comply with ANSI Z535.4 for safety signs and labels.

E. Adhesive-attached labeling materials, including label stocks, laminating adhesives, and inks used by label printers, shall comply with UL 969.

PART 42 - PRODUCTS

42.1 POWER RACEWAY IDENTIFICATION MATERIALS

A. Comply with ANSI A13.1 for minimum size of letters for legend and for minimum length of color field for each raceway size.

B. Colors for Raceways Carrying Circuits at 600 V or Less:

1. White letters on a black field.
2. Legend: Indicate voltage, phase and wire.

C. Self-Adhesive Vinyl Labels for Raceways Carrying Circuits at 600 V or Less: Preprinted, flexible label laminated with a clear, weather- and chemical-resistant coating and matching wraparound adhesive tape for securing ends of legend label.

D. Snap-Around Labels for Raceways Carrying Circuits at 600 V or Less: Slit, pretensioned, flexible, preprinted, color-coded acrylic sleeve, with diameter sized to suit diameter of raceway or cable it identifies and to stay in place by gripping action.

E. Snap-Around, Color-Coding Bands for Raceways Carrying Circuits at 600 V or Less: Slit, pretensioned, flexible, solid-colored acrylic sleeve, 2 inches (50 mm) long, with diameter sized to suit diameter of raceway or cable it identifies and to stay in place by gripping action.

F. Write-On Tags: Polyester tag, 0.015 inch (0.38 mm) thick, with corrosion-resistant grommet and cable tie for attachment to conductor or cable.

1. Marker for Tags: Permanent, waterproof, black ink marker recommended by tag manufacturer.
2. Marker for Tags: Machine-printed, permanent, waterproof, black ink marker recommended by printer manufacturer.

42.2 ARMORED AND METAL-CLAD CABLE IDENTIFICATION MATERIALS

A. Comply with ANSI A13.1 for minimum size of letters for legend and for minimum length of color field for each raceway and cable size.

B. Colors for Raceways Carrying Circuits at 600 V and Less:

1. White letters on a Black field
2. Legend: Indicate voltage, phase and wire.

C. Self-Adhesive Vinyl Labels: Preprinted, flexible label laminated with a clear, weather- and chemical-resistant coating and matching wraparound adhesive tape for securing ends of legend label.

D. Self-Adhesive Vinyl Tape: Colored, heavy duty, waterproof, fade resistant; 2 inches (50 mm) wide; compounded for outdoor use.

42.3 POWER AND CONTROL CABLE IDENTIFICATION MATERIALS

A. Comply with ANSI A13.1 for minimum size of letters for legend and for minimum length of color field for each raceway and cable size.

B. Self-Adhesive Vinyl Labels: Preprinted, flexible label laminated with a clear, weather- and chemical-resistant coating and matching wraparound adhesive tape for securing ends of legend label.

C. Write-On Tags: Polyester tag, 0.015 inch (0.38 mm) thick, with corrosion-resistant grommet and cable tie for attachment to conductor or cable.

1. Marker for Tags: Permanent, waterproof, black ink marker recommended by tag manufacturer.
2. Marker for Tags: Machine-printed, permanent, waterproof, black ink marker recommended by printer manufacturer.

D. Snap-Around Labels: Slit, pretensioned, flexible, preprinted, color-coded acrylic sleeve, with diameter sized to suit diameter of raceway or cable it identifies and to stay in place by gripping action.

E. Snap-Around, Color-Coding Bands: Slit, pretensioned, flexible, solid-colored acrylic sleeve, 2 inches (50 mm) long, with diameter sized to suit diameter of raceway or cable it identifies and to stay in place by gripping action.

42.4 CONDUCTOR IDENTIFICATION MATERIALS

A. Color-Coding Conductor Tape: Colored, self-adhesive vinyl tape not less than 3 mils (0.08 mm) thick by 1 to 2 inches (25 to 50 mm) wide.

B. Self-Adhesive Vinyl Labels: Preprinted, flexible label laminated with a clear, weather- and chemical-resistant coating and matching wraparound adhesive tape for securing ends of legend label.

C. Marker Tapes: Vinyl or vinyl-cloth, self-adhesive wraparound type, with circuit identification legend machine printed by thermal transfer or equivalent process.

D. Write-On Tags: Polyester tag, 0.015 inch (0.38 mm) thick, with corrosion-resistant grommet and cable tie for attachment to conductor or cable.

1. Marker for Tags: Permanent, waterproof, black ink marker recommended by tag manufacturer.
2. Marker for Tags: Machine-printed, permanent, waterproof, black ink marker recommended by printer manufacturer.

42.5 FLOOR MARKING TAPE

A. 2-inch- (50-mm-) wide, 5-mil (0.125-mm) pressure-sensitive vinyl tape, with black and white stripes and clear vinyl overlay.

42.6 WARNING LABELS AND SIGNS

A. Comply with NFPA 70 and 29 CFR 1910.145.

B. Self-Adhesive Warning Labels: Factory-printed, multicolor, pressure-sensitive adhesive labels, configured for display on front cover, door, or other access to equipment unless otherwise indicated.

C. Baked-Enamel Warning Signs:

1. Preprinted aluminum signs, punched or drilled for fasteners, with colors, legend, and size required for application.
2. 1/4-inch (6.4-mm) grommets in corners for mounting.
3. Nominal size, 7 by 10 inches (180 by 250 mm).

D. Metal-Backed, Butyrate Warning Signs:

1. Weather-resistant, non-fading, preprinted, cellulose-acetate butyrate signs with 0.0396-inch (1-mm) galvanized-steel backing; and with colors, legend, and size required for application.
2. 1/4-inch (6.4-mm) grommets in corners for mounting.
3. Nominal size, 10 by 14 inches (250 by 360 mm).

E. Warning label and sign shall include, but are not limited to, the following legends:

1. Multiple Power Source Warning: "DANGER - ELECTRICAL SHOCK HAZARD - EQUIPMENT HAS MULTIPLE POWER SOURCES."
2. Workspace Clearance Warning: "WARNING - OSHA REGULATION - AREA IN FRONT OF ELECTRICAL EQUIPMENT MUST BE KEPT CLEAR FOR 36 INCHES (915 MM)."

42.7 INSTRUCTION SIGNS

A. Engraved, laminated acrylic or melamine plastic, minimum 1/16 inch (1.6 mm) thick for signs up to 20 sq. inches (129 sq. cm) and 1/8 inch (3.2 mm) thick for larger sizes.

1. Engraved legend with black letters on white face.
2. Punched or drilled for mechanical fasteners.
3. Framed with mitered acrylic molding and arranged for attachment at applicable equipment.

B. Adhesive Film Label: Machine printed, in black, by thermal transfer or equivalent process. Minimum letter height shall be 3/8 inch (10 mm).

C. Adhesive Film Label with Clear Protective Overlay: Machine printed, in black, by thermal transfer or equivalent process. Minimum letter height shall be 3/8 inch (10 mm). Overlay shall provide a weatherproof and UV-resistant seal for label.

42.8 EQUIPMENT IDENTIFICATION LABELS

A. Adhesive Film Label with Clear Protective Overlay: Machine printed, in black, by thermal transfer or equivalent process. Minimum letter height shall be 3/8 inch (10 mm). Overlay shall provide a weatherproof and UV-resistant seal for label.

B. Self-Adhesive, Engraved, Laminated Acrylic or Melamine Label: Adhesive backed, with white letters on a dark-gray background. Minimum letter height shall be 3/8 inch (10 mm).

C. Stenciled Legend: In non-fading, waterproof, black ink or paint. Minimum letter height shall be 1 inch (25 mm).

42.9 MISCELLANEOUS IDENTIFICATION PRODUCTS

A. Paint: Comply with requirements in Division 9 painting Sections for paint materials and application requirements. Select paint system applicable for surface material and location (exterior or interior).

B. Fasteners for Labels and Signs: Self-tapping, stainless-steel screws or stainless-steel machine screws with nuts and flat and lock washers.

PART 43 - EXECUTION

43.1 INSTALLATION

A. Location: Install identification materials and devices at locations for most convenient viewing without interference with operation and maintenance of equipment.

B. Apply identification devices to surfaces that require finish after completing finish work.

C. Self-Adhesive Identification Products: Clean surfaces before application, using materials and methods recommended by manufacturer of identification device.

D. Attach signs and plastic labels that are not self-adhesive type with mechanical fasteners appropriate to the location and substrate.

E. Painted Identification: Comply with requirements in Division 9 painting Sections for surface preparation and paint application.

43.2 IDENTIFICATION SCHEDULE

A. Accessible Raceways and Metal-Clad Cables, 600 V or Less, for Service, Feeder, and Branch Circuits More Than 30A, and 120 V to ground: Install labels at 30-foot (10-m) maximum intervals.

B. Accessible Raceways and Cables within Buildings: Identify the covers of each junction and pull box of the following systems with self-adhesive vinyl labels with the wiring system legend and system voltage. System legends shall be as follows:

1. Emergency Power.
2. Power.

C. Power-Circuit Conductor Identification, 600 V or Less: For conductors in vaults, pull and junction boxes, manholes, and handholes, use color-coding conductor tape to identify the phase.

1. Color-Coding for Phase and Voltage Level Identification, 600 V or Less: Use colors listed below for ungrounded feeder and branch-circuit conductors.

   a. Color shall be factory applied or field applied for sizes larger than No. 8 AWG, if authorities having jurisdiction permit.
   b. Colors for 208/120-V Circuits:

      1) Phase A: Black.
      2) Phase B: Red.
      3) Phase C: Blue.

   c. Colors for 480/277-V Circuits:

      1) Phase A: Brown.
      2) Phase B: Orange.
      3) Phase C: Yellow.

   d. Field-Applied, Color-Coding Conductor Tape: Apply in half-lapped turns for a minimum distance of 6 inches (150 mm) from terminal points and in boxes where splices or taps are made. Apply last two turns of tape with no tension to prevent possible unwinding. Locate bands to avoid obscuring factory cable markings.

D. Install instructional sign including the color-code for grounded and ungrounded conductors using adhesive-film-type labels.

E. Conductors to Be Extended in the Future: Attach write-on tags to conductors and list source.

F. Auxiliary Electrical Systems Conductor Identification: Identify field-installed alarm, control, and signal connections.

1. Identify conductors, cables, and terminals in enclosures and at junctions, terminals, and pull points. Identify by system and circuit designation.
2. Use system of marker tape designations that is uniform and consistent with system used by manufacturer for factory-installed connections.
3. Coordinate identification with Project Drawings, manufacturer's wiring diagrams, and the Operation and Maintenance Manual.

G. Workspace Indication: Install floor marking tape to show working clearances in the direction of access to live parts. Workspace shall be as required by NFPA 70 and 29 CFR 1926.403 unless otherwise indicated. Do not install at flush-mounted panelboards and similar equipment in finished spaces.

H. Warning Labels for Indoor Cabinets, Boxes, and Enclosures for Power and Lighting: Self-adhesive warning labels.

1. Comply with 29 CFR 1910.145.
2. Identify system voltage with black letters on an orange background.
3. Apply to exterior of door, cover, or other access.

I. Operating Instruction Signs: Install instruction signs to facilitate proper operation and maintenance of electrical systems and items to which they connect. Install instruction signs with approved legend where instructions are needed for system or equipment operation.

J. Equipment Identification Labels: On each unit of equipment, install unique designation label that is consistent with wiring diagrams, schedules, and the Operation and Maintenance Manual. Apply labels to disconnect switches and protection equipment, central or master units, control panels, control stations, terminal cabinets, and racks of each system. Systems include power, lighting, control, communication, signal, monitoring, and alarm systems unless equipment is provided with its own identification.

1. Labeling Instructions:

a. Indoor Equipment: Adhesive film label with clear protective overlay. Unless otherwise indicated, provide a single line of text with 1/2-inch- (13-mm-) high letters on 1-1/2-inch- (38-mm-) high label; where two lines of text are required, use labels 2 inches (50 mm) high.
b. Outdoor Equipment: Engraved, laminated acrylic or melamine label.
c. Elevated Components: Increase sizes of labels and letters to those appropriate for viewing from the floor.
d. Unless provided with self-adhesive means of attachment, fasten labels with appropriate mechanical fasteners that do not change the NEMA or NRTL rating of the enclosure.

END OF SECTION 16075

SECTION 16091

SLEEVES AND SLEEVE SEALS FOR ELECTRICAL RACEWAYS AND CABLING

PART 44 - GENERAL

44.1 SUMMARY

A. Section Includes:

1. Sleeves for raceway and cable penetration of non-fire-rated construction walls and floors.
2. Sleeve-seal systems.
3. Sleeve-seal fittings.
4. Grout.
5. Silicone sealants.

B. Related Requirements:

1. Division 7 Section "Through-Penetration Firestop Systems" for penetration firestopping installed in fire-resistance-rated walls, horizontal assemblies, and smoke barriers, with and without penetrating items.

44.2 ACTION SUBMITTALS

A. Product Data: For each type of product.

PART 45 - PRODUCTS

45.1 SLEEVES

A. Wall Sleeves:

1. Steel Pipe Sleeves: ASTM A 53/A 53M, Type E, Grade B, Schedule 40, zinc coated, plain ends.

B. Sleeves for Rectangular Openings:

1. Material: Galvanized sheet steel.
2. Minimum Metal Thickness:

a. For sleeve cross-section rectangle perimeter less than 50 inches (1270 mm) and with no side larger than 16 inches (400 mm), thickness shall be 0.052 inch (1.3 mm).

b. For sleeve cross-section rectangle perimeter 50 inches (1270 mm) or more and one or more sides larger than 16 inches (400 mm), thickness shall be 0.138 inch (3.5 mm).

45.2 SLEEVE-SEAL SYSTEMS

A. Description: Modular sealing device, designed for field assembly, to fill annular space between sleeve and raceway or cable.

1. Manufacturers: Subject to compliance with requirements, available manufacturers offering products that may be incorporated into the Work include, but are not limited to, the following:
2. Basis-of-Design Product: Subject to compliance with requirements, provide product indicated on Drawings; product name or designation or comparable product by one of the following:

   a. Advance Products & Systems, Inc.
   b. CALPICO, Inc.
   c. Metraflex Company (The).
   d. Pipeline Seal and Insulator, Inc.
   e. Proco Products, Inc.

3. Sealing Elements: EPDM rubber interlocking links shaped to fit surface of pipe. Include type and number required for pipe material and size of pipe.
4. Pressure Plates: Carbon steel.
5. Connecting Bolts and Nuts: Carbon steel, with corrosion-resistant coating of length required to secure pressure plates to sealing elements.

45.3 SLEEVE-SEAL FITTINGS

A. Description: Manufactured plastic, sleeve-type, waterstop assembly made for embedding in concrete slab or wall. Unit shall have plastic or rubber waterstop collar with center opening to match piping OD.

1. Manufacturers: Subject to compliance with requirements, available manufacturers offering products that may be incorporated into the Work include, but are not limited to, the following:
2. Basis-of-Design Product: Subject to compliance with requirements, provide product indicated on Drawings or comparable product by one of the following:

   a. Presealed Systems.

45.4 GROUT

A. Description: Non-shrink; recommended for interior and exterior sealing openings in non-fire-rated walls or floors.

B. Standard: ASTM C 1107/C 1107M, Grade B, post-hardening and volume-adjusting, dry, hydraulic-cement grout.

C. Design Mix: 5000-psi (34.5-MPa), 28-day compressive strength.

D. Packaging: Premixed and factory packaged.

PART 46 - EXECUTION

46.1 SLEEVE INSTALLATION FOR NON-FIRE-RATED ELECTRICAL PENETRATIONS

A. Comply with NECA 1.

B. Comply with NEMA VE 2 for cable tray and cable penetrations.

C. Sleeves for Conduits Penetrating Above-Grade Non-Fire-Rated Concrete and Masonry-Unit Floors and Walls:

1. Interior Penetrations of Non-Fire-Rated Walls and Floors:

   a. Seal annular space between sleeve and raceway or cable, using joint sealant appropriate for size, depth, and location of joint. Comply with requirements in Division 7 Section "Joint Sealants."
   b. Seal space outside of sleeves with mortar or grout. Pack sealing material solidly between sleeve and wall so no voids remain. Tool exposed surfaces smooth; protect material while curing.

2. Use pipe sleeves unless penetration arrangement requires rectangular sleeved opening.
3. Size pipe sleeves to provide 1/4-inch (6.4-mm) annular clear space between sleeve and raceway or cable unless sleeve seal is to be installed.
4. Install sleeves for wall penetrations unless core-drilled holes or formed openings are used. Install sleeves during erection of walls. Cut sleeves to length for mounting flush with both surfaces of walls. Deburr after cutting.
5. Install sleeves for floor penetrations. Extend sleeves installed in floors 2 inches (50 mm) above finished floor level. Install sleeves during erection of floors.

D. Roof-Penetration Sleeves: Seal penetration of individual raceways and cables with flexible boot-type flashing units applied in coordination with roofing work. All roof penetration and sealing work shall be performed by owners approved contractor.

E. Aboveground, Exterior-Wall Penetrations: Seal penetrations using steel pipe sleeves and mechanical sleeve seals. Select sleeve size to allow for 1-inch (25-mm) annular clear space between pipe and sleeve for installing mechanical sleeve seals.

F. Underground, Exterior-Wall and Floor Penetrations: Install cast-iron pipe sleeves. Size sleeves to allow for 1-inch (25-mm) annular clear space between raceway or cable and sleeve for installing sleeve-seal system.

46.2 SLEEVE-SEAL-SYSTEM INSTALLATION

A. Install sleeve-seal systems in sleeves in exterior concrete walls and slabs-on-grade at raceway entries into building.

B. Install type and number of sealing elements recommended by manufacturer for raceway or cable material and size. Position raceway or cable in center of sleeve. Assemble mechanical sleeve seals and install in annular space between raceway or cable and sleeve. Tighten bolts against pressure plates that cause sealing elements to expand and make watertight seal.

46.3 SLEEVE-SEAL-FITTING INSTALLATION

A. Install sleeve-seal fittings in new walls and slabs as they are constructed.

B. Assemble fitting components of length to be flush with both surfaces of concrete slabs and walls. Position waterstop flange to be centered in concrete slab or wall.

C. Secure nailing flanges to concrete forms.

D. Using grout, seal the space around outside of sleeve-seal fittings.

END OF SECTION 16091

SECTION 16092

SLEEVES AND SLEEVE SEALS FOR COMMUNICATIONS PATHWAYS AND CABLING

PART 47 - GENERAL

47.1 SUMMARY

A. Section Includes:

1. Sleeves for pathway and cable penetration of non-fire-rated construction walls and floors.
2. Sleeve-seal systems.
3. Sleeve-seal fittings.
4. Grout.
5. Silicone sealants.

B. Related Requirements:

1. Division 7 Section "Through-Penetration Firestop Systems" for penetration firestopping installed in fire-resistance-rated walls, horizontal assemblies, and smoke barriers, with and without penetrating items.

47.2 ACTION SUBMITTALS

A. Product Data: For each type of product.

PART 48 - PRODUCTS

48.1 SLEEVES

A. Wall Sleeves:

1. Steel Pipe Sleeves: ASTM A 53/A 53M, Type E, Grade B, Schedule 40, zinc coated, plain ends.
2. Cast-Iron Pipe Sleeves: Cast or fabricated "wall pipe," equivalent to ductile-iron pressure pipe, with plain ends and integral waterstop unless otherwise indicated.

B. Sleeves for Conduits Penetrating Non-Fire-Rated Gypsum Board Assemblies: Galvanized-steel sheet; 0.0239-inch (0.6-mm) minimum thickness; round tube closed with welded longitudinal joint, with tabs for screw-fastening the sleeve to the board.

C. Sleeves for Rectangular Openings:

1. Material: Galvanized-steel sheet.
2. Minimum Metal Thickness:

a. For sleeve cross-section rectangle perimeter less than 50 inches (1270 mm) and with no side larger than 16 inches (400 mm), thickness shall be 0.052 inch (1.3 mm).
b. For sleeve cross-section rectangle perimeter 50 inches (1270 mm) or more and one or more sides larger than 16 inches (400 mm), thickness shall be 0.138 inch (3.5 mm).

48.2 SLEEVE-SEAL SYSTEMS

A. Description: Modular sealing device, designed for field assembly, to fill annular space between sleeve and pathway or cable.

1. Manufacturers: Subject to compliance with requirements, available manufacturers offering products that may be incorporated into the Work include, but are not limited to, the following:
2. Basis-of-Design Product: Subject to compliance with requirements, provide product indicated on Drawings or comparable product by one of the following:

a. Advance Products & Systems, Inc.
b. CALPICO, Inc.
c. Metraflex Company (The).
d. Pipeline Seal and Insulator, Inc.
e. Proco Products, Inc.

3. Sealing Elements: EPDM rubber interlocking links shaped to fit surface of pipe. Include type and number required for pipe material and size of pipe.
4. Pressure Plates: Carbon steel.
5. Connecting Bolts and Nuts: Carbon steel, with corrosion-resistant coating of length required to secure pressure plates to sealing elements.

48.3 SLEEVE-SEAL FITTINGS

A. Description: Manufactured plastic, sleeve-type, waterstop assembly made for embedding in concrete slab or wall. Unit shall have plastic or rubber waterstop collar with center opening to match piping OD.

1. Manufacturers: Subject to compliance with requirements, available manufacturers offering products that may be incorporated into the Work include, but are not limited to, the following:
2. Basis-of-Design Product: Subject to compliance with requirements, provide product indicated on Drawings or comparable product by one of the following:

a. Presealed Systems.

48.4 GROUT

A. Description: Nonshrink; recommended for interior and exterior sealing openings in non-fire-rated walls or floors.

B. Standard: ASTM C 1107/C 1107M, Grade B, post-hardening and volume-adjusting, dry, hydraulic-cement grout.

C. Design Mix: 5000-psi (34.5-MPa), 28-day compressive strength.

D. Packaging: Premixed and factory packaged.

48.5 SILICONE SEALANTS

A. Silicone Sealants: Single-component, silicone-based, neutral-curing elastomeric sealants of grade indicated below.

1. Grade: Pourable (self-leveling) formulation for openings in floors and other horizontal surfaces that are not fire rated.

B. Silicone Foams: Multicomponent, silicone-based liquid elastomers that, when mixed, expand and cure in place to produce a flexible, non-shrinking foam.

PART 49 - EXECUTION

49.1 SLEEVE INSTALLATION FOR NON-FIRE-RATED ELECTRICAL PENETRATIONS

A. Comply with NECA 1.

B. Comply with NEMA VE 2 for cable tray and cable penetrations.

C. Sleeves for Conduits Penetrating Above-Grade Non-Fire-Rated Concrete and Masonry-Unit Floors and Walls:

1. Interior Penetrations of Non-Fire-Rated Walls and Floors:

a. Seal annular space between sleeve and pathway or cable, using joint sealant appropriate for size, depth, and location of joint. Comply with requirements in Division 7 Section "Joint Sealants."
b. Seal space outside of sleeves with mortar or grout. Pack sealing material solidly between sleeve and wall so no voids remain. Tool exposed surfaces smooth; protect material while curing.

2. Use pipe sleeves unless penetration arrangement requires rectangular sleeved opening.
3. Size pipe sleeves to provide 1/4-inch (6.4-mm) annular clear space between sleeve and pathway or cable unless sleeve seal is to be installed or unless seismic criteria require different clearance.

4. Install sleeves for wall penetrations unless core-drilled holes or formed openings are used. Install sleeves during erection of walls. Cut sleeves to length for mounting flush with both surfaces of walls. Deburr after cutting.
5. Install sleeves for floor penetrations. Extend sleeves installed in floors 2 inches (50 mm) above finished floor level. Install sleeves during erection of floors.

D. Sleeves for Conduits Penetrating Non-Fire-Rated Gypsum Board Assemblies:

1. Use circular metal sleeves unless penetration arrangement requires rectangular sleeved opening.
2. Seal space outside of sleeves with approved joint compound for gypsum board assemblies.

E. Roof-Penetration Sleeves: Seal penetration of individual pathways and cables with flexible boot-type flashing units applied in coordination with roofing work.

F. Aboveground, Exterior-Wall Penetrations: Seal penetrations using steel pipe sleeves and mechanical sleeve seals. Select sleeve size to allow for 1-inch (25-mm) annular clear space between pipe and sleeve for installing mechanical sleeve seals.

G. Underground, Exterior-Wall and Floor Penetrations: Install cast-iron pipe sleeves. Size sleeves to allow for 1-inch (25-mm) annular clear space between pathway or cable and sleeve for installing sleeve-seal system.

49.2 SLEEVE-SEAL-SYSTEM INSTALLATION

A. Install sleeve-seal systems in sleeves in exterior concrete walls and slabs-on-grade at pathway entries into building.

B. Install type and number of sealing elements recommended by manufacturer for pathway or cable material and size. Position pathway or cable in center of sleeve. Assemble mechanical sleeve seals and install in annular space between pathway or cable and sleeve. Tighten bolts against pressure plates that cause sealing elements to expand and make watertight seal.

49.3 SLEEVE-SEAL-FITTING INSTALLATION

A. Install sleeve-seal fittings in new walls and slabs as they are constructed.

B. Assemble fitting components of length to be flush with both surfaces of concrete slabs and walls. Position waterstop flange to be centered in concrete slab or wall.

C. Secure nailing flanges to concrete forms.

D. Using grout, seal the space around outside of sleeve-seal fittings.

END OF SECTION 16092

SECTION 16120

CONDUCTORS AND CABLES

PART 50 - GENERAL

50.1 SUMMARY

A. This Section includes the following:

1. Building wires and cables rated 600 V and less.
2. Connectors, splices, and terminations rated 600 V and less.
3. Sleeves and sleeve seals for cables.

50.2 SUBMITTALS

A. Product Data: For each type of product indicated.

B. Field quality-control test reports.

50.3 QUALITY ASSURANCE

A. Electrical Components, Devices, and Accessories: Listed and labeled as defined in NFPA 70, Article 100, by a testing agency acceptable to authorities having jurisdiction, and marked for intended use.

B. Comply with NFPA 70.

PART 51 - PRODUCTS

51.1 CONDUCTORS AND CABLES

A. Copper Conductors: Comply with NEMA WC 70.

B. Conductor Insulation: Comply with NEMA WC 70 for Types THHN-THWN.

C. Multiconductor Cable: Comply with NEMA WC 70 for metal-clad cable, Type MC with ground wire.

51.2 CONNECTORS AND SPLICES

A. Available Manufacturers: Subject to compliance with requirements, manufacturers offering products that may be incorporated into the Work include, but are not limited to, the following:

B. Manufacturers: Subject to compliance with requirements, provide products by one of the following:

1. AFC Cable Systems, Inc.
2. Hubbell Power Systems, Inc.
3. O-Z/Gedney; EGS Electrical Group LLC.
4. 3M; Electrical Products Division.
5. Tyco Electronics Corp.

C. Description: Factory-fabricated connectors and splices of size, ampacity rating, material, type, and class for application and service indicated.

51.3 SLEEVES FOR CABLES

A. Steel Pipe Sleeves: ASTM A 53/A 53M, Type E, Grade B, Schedule 40, galvanized steel, plain ends.

B. Cast-Iron Pipe Sleeves: Cast or fabricated "wall pipe," equivalent to ductile-iron pressure pipe, with plain ends and integral water stop, unless otherwise indicated.

C. Coordinate sleeve selection and application with selection and application of firestopping specified in Division 7 Section "Through-Penetration Firestop Systems."

51.4 SLEEVE SEALS

A. Available Manufacturers: Subject to compliance with requirements, manufacturers offering products that may be incorporated into the Work include, but are not limited to, the following:

B. Manufacturers: Subject to compliance with requirements, provide products by one of the following:

C. Basis-of-Design Product: Subject to compliance with requirements, provide the product indicated on Drawings or a comparable product by one of the following:

1. Advance Products & Systems, Inc.
2. Calpico, Inc.
3. Metraflex Co.
4. Pipeline Seal and Insulator, Inc.

D. Description: Modular sealing device, designed for field assembly, to fill annular space between sleeve and cable.

1. Sealing Elements: EPDM interlocking links shaped to fit surface of cable or conduit. Include type and number required for material and size of raceway or cable.
2. Pressure Plates: Carbon steel. Include two for each sealing element.

3. Connecting Bolts and Nuts: Carbon steel with corrosion-resistant coating of length required to secure pressure plates to sealing elements. Include one for each sealing element.

PART 52 - EXECUTION

52.1 CONDUCTOR MATERIAL APPLICATIONS

A. Feeders: Copper. Solid for No. 10 AWG and smaller; stranded for No. 8 AWG and larger.

B. Branch Circuits: Copper. Solid for No. 10 AWG and smaller; stranded for No. 8 AWG and larger.

52.2 CONDUCTOR INSULATION AND MULTICONDUCTOR CABLE APPLICATIONS AND WIRING METHODS

A. Exposed Feeders: Type THHN-THWN, single conductors in raceway.

B. Feeders Concealed in Ceilings, Walls, Partitions, and Crawlspaces: Type THHN-THWN, single conductors in raceway or Metal-clad cable, Type MC.

C. Feeders Concealed in Concrete, below Slabs-on-Grade, and Underground: Type THHN-THWN, single conductors in raceway.

D. Exposed Branch Circuits, Including in Crawlspaces: Type THHN-THWN, single conductors in raceway.

E. Branch Circuits Concealed in Ceilings, Walls, and Partitions: Type THHN-THWN, single conductors in raceway.

F. Branch Circuits Concealed in Concrete, below Slabs-on-Grade, and Underground: Type THHN-THWN, single conductors in raceway

G. Cord Drops and Portable Appliance Connections: Type SO, hard service cord with stainless-steel, wire-mesh, strain relief device at terminations to suit application.

H. Class 1 Control Circuits: Type THHN-THWN, in raceway.

I. Class 2 Control Circuits: Power-limited cable, concealed in building finishes.

52.3 INSTALLATION OF CONDUCTORS AND CABLES

A. Conceal cables in finished walls, ceilings, and floors, unless otherwise indicated.

B. Use manufacturer-approved pulling compound or lubricant where necessary; compound used must not deteriorate conductor or insulation. Do not exceed manufacturer's recommended maximum pulling tensions and sidewall pressure values.

C. Use pulling means, including fish tape, cable, rope, and basket-weave wire/cable grips that will not damage cables or raceway.

D. Install exposed cables parallel and perpendicular to surfaces of exposed structural members, and follow surface contours where possible.

E. Support cables according to Division 16 Section "Electrical Supports and Seismic Restraints."

F. Identify and color-code conductors and cables according to Division 16 Section "Electrical Identification."

G. Tighten electrical connectors and terminals according to manufacturer's published torque-tightening values. If manufacturer's torque values are not indicated, use those specified in UL 486A and UL 486B.

H. Make splices and taps that are compatible with conductor material and that possess equivalent or better mechanical strength and insulation ratings than unspliced conductors.

1. Use oxide inhibitor in each splice and tap conductor for aluminum conductors.

I. Wiring at Outlets: Install conductor at each outlet, with at least 6 inches (150 mm) of slack.

52.4 SLEEVE INSTALLATION FOR ELECTRICAL PENETRATIONS

A. Coordinate sleeve selection and application with selection and application of firestopping specified in Division 7 Section "Through-Penetration Firestop Systems."

B. Concrete Slabs and Walls: Install sleeves for penetrations unless core-drilled holes or formed openings are used. Install sleeves during erection of slabs and walls.

C. Fire-Rated Assemblies: Install sleeves for penetrations of fire-rated floor and wall assemblies unless openings compatible with firestop system used are fabricated during construction of floor or wall.

D. Cut sleeves to length for mounting flush with both wall surfaces.

E. Extend sleeves installed in floors 2 inches (50 mm) above finished floor level.

F. Size pipe sleeves to provide 1/4-inch (6.4-mm) annular clear space between sleeve and cable unless sleeve seal is to be installed or unless seismic criteria require different clearance.

G. Seal space outside of sleeves with grout for penetrations of concrete and masonry and with approved joint compound for gypsum board assemblies.

H. Interior Penetrations of Non-Fire-Rated Walls and Floors: Seal annular space between sleeve and cable, using joint sealant appropriate for size, depth, and location of joint according to Division 7 Section "Joint Sealants."

I. Fire-Rated-Assembly Penetrations: Maintain indicated fire rating of walls, partitions, ceilings, and floors at cable penetrations. Install sleeves and seal with firestop materials according to Division 7 Section "Through-Penetration Firestop Systems."

J. Roof-Penetration Sleeves: Seal penetration of individual cables with flexible boot-type flashing units applied in coordination with roofing work.

K. Aboveground Exterior-Wall Penetrations: Seal penetrations using sleeves and mechanical sleeve seals. Size sleeves to allow for 1-inch (25-mm) annular clear space between pipe and sleeve for installing mechanical sleeve seals.

L. Underground Exterior-Wall Penetrations: Install cast-iron "wall pipes" for sleeves. Size sleeves to allow for 1-inch (25-mm) annular clear space between cable and sleeve for installing mechanical sleeve seals.

52.5 SLEEVE-SEAL INSTALLATION

A. Install to seal underground exterior-wall penetrations.

B. Use type and number of sealing elements recommended by manufacturer for cable material and size. Position cable in center of sleeve. Assemble mechanical sleeve seals and install in annular space between cable and sleeve. Tighten bolts against pressure plates that cause sealing elements to expand and make watertight seal.

52.6 FIRESTOPPING

A. Apply firestopping to electrical penetrations of fire-rated floor and wall assemblies to restore original fire-resistance rating of assembly according to Division 7 Section "Through-Penetration Firestop Systems."

52.7 FIELD QUALITY CONTROL

A. Perform tests and inspections and prepare test reports.

B. Tests and Inspections:

1. After installing conductors and cables and before electrical circuitry has been energized, test feeder conductors and conductors feeding relocated panelboards.

2. Perform each visual and mechanical inspection and electrical test stated in NETA Acceptance Testing Specification. Certify compliance with test parameters.

3. Infrared Scanning: After Substantial Completion, but not more than 60 days after Final Acceptance, perform an infrared scan of each splice in cables and conductors within panels and enclosures. Remove box and equipment covers so splices are accessible to portable scanner.

a. Provide Infrared scan of all panel boards where modifications or additions are taking plan to ensure that all existing and new terminations are properly installed and torque.

b. Follow-up Infrared Scanning: Perform an additional follow-up infrared scan of each splice 11 months after date of Substantial Completion.

c. Instrument: Use an infrared scanning device designed to measure temperature or to detect significant deviations from normal values. Provide calibration record for device.

d. Record of Infrared Scanning: Prepare a certified report that identifies splices checked and that describes scanning results. Include notation of deficiencies detected, remedial action taken, and observations after remedial action.

C. Test Reports: Prepare a written report to record the following:

1. Test procedures used.
2. Test results that comply with requirements.
3. Test results that do not comply with requirements and corrective action taken to achieve compliance with requirements.

D. Remove and replace malfunctioning units and retest as specified above.

END OF SECTION 16120

SECTION 16130

RACEWAYS AND BOXES

PART 53 - GENERAL

53.1 SUMMARY

A. This Section includes raceways, fittings, boxes, enclosures, and cabinets for electrical wiring.

53.2 SUBMITTALS

A. Product Data: For surface raceways, wireways and fittings, floor boxes, hinged-cover enclosures, and cabinets.

B. Shop Drawings: For custom enclosures and cabinets. Include plans, elevations, sections, details, and attachments to other work.

53.3 QUALITY ASSURANCE

A. Electrical Components, Devices, and Accessories: Listed and labeled as defined in NFPA 70, Article 100, by a testing agency acceptable to authorities having jurisdiction, and marked for intended use.

B. Comply with NFPA 70.

PART 54 - PRODUCTS

54.1 METAL CONDUIT AND TUBING

A. Rigid Steel Conduit: ANSI C80.1.

B. IMC: ANSI C80.6.

C. EMT: ANSI C80.3.

D. FMC: Zinc-coated steel.

E. LFMC: Flexible steel conduit with PVC jacket.

F. Fittings for Conduit (Including all Types and Flexible and Liquidtight), EMT, and Cable: NEMA FB 1; listed for type and size raceway with which used, and for application and environment in which installed.

1. Conduit Fittings for Hazardous (Classified) Locations: Comply with UL 886.
2. Fittings for EMT: Steel, compression type.

54.2 NONMETALLIC CONDUIT AND TUBING

A. ENT: NEMA TC 13.

B. RNC: NEMA TC 2, Type EPC-40-PVC, unless otherwise indicated.

C. LFNC: UL 1660.

D. Fittings for ENT and RNC: NEMA TC 3; match to conduit or tubing type and material.

E. Fittings for LFNC: UL 514B.

54.3 METAL WIREWAYS

A. Available Manufacturers: Subject to compliance with requirements, manufacturers offering products that may be incorporated into the Work include, but are not limited to, the following:

B. Manufacturers: Subject to compliance with requirements, provide products by one of the following:

1. Cooper B-Line, Inc.
2. Hoffman.
3. Square D; Schneider Electric.

C. Description: Sheet metal sized and shaped as indicated, NEMA 250, Type 1, unless otherwise indicated.

D. Fittings and Accessories: Include couplings, offsets, elbows, expansion joints, adapters, hold-down straps, end caps, and other fittings to match and mate with wireways as required for complete system.

E. Wireway Covers: Screw-cover type.

F. Finish: Manufacturer's standard enamel finish.

54.4 NONMETALLIC WIREWAYS

A. Available Manufacturers: Subject to compliance with requirements, manufacturers offering products that may be incorporated into the Work include, but are not limited to, the following:

B. Manufacturers: Subject to compliance with requirements, provide products by one of the following:

1. Hoffman.

2. Lamson & Sessions; Carlon Electrical Products.

C. Description: PVC plastic, extruded and fabricated to size and shape indicated, with snap-on cover and mechanically coupled connections with plastic fasteners.

D. Fittings and Accessories: Include couplings, offsets, elbows, expansion joints, adapters, hold-down straps, end caps, and other fittings to match and mate with wireways as required for complete system.

54.5 SURFACE RACEWAYS

A. Surface Metal Raceways: Galvanized steel with snap-on covers. Manufacturer's standard enamel finish in color selected by Architect.

1. Available Manufacturers: Subject to compliance with requirements, manufacturers offering products that may be incorporated into the Work include, but are not limited to, the following:
2. Manufacturers: Subject to compliance with requirements, provide products by one of the following:

a. Thomas & Betts Corporation.
b. Walker Systems, Inc.; Wiremold Company (The).
c. Wiremold Company (The); Electrical Sales Division.

B. Surface Nonmetallic Raceways: Two-piece construction, manufactured of rigid PVC with texture and color selected by Architect from manufacturer's standard colors.

1. Available Manufacturers: Subject to compliance with requirements, manufacturers offering products that may be incorporated into the Work include, but are not limited to, the following:
2. Manufacturers: Subject to compliance with requirements, provide products by one of the following:

a. Butler Manufacturing Company; Walker Division.
b. Enduro Systems, Inc.; Composite Products Division.
c. Hubbell Incorporated; Wiring Device-Kellems Division.
d. Lamson & Sessions; Carlon Electrical Products.
e. Panduit Corp.
f. Walker Systems, Inc.; Wiremold Company (The).
g. Wiremold Company (The); Electrical Sales Division.

54.6 BOXES, ENCLOSURES, AND CABINETS

A. Sheet Metal Outlet and Device Boxes: NEMA OS 1.

B. Cast-Metal Outlet and Device Boxes: NEMA FB 1, ferrous alloy, Type FD, with gasketed cover.

C. Nonmetallic Outlet and Device Boxes: NEMA OS 2.

D. Metal Floor Boxes: Cast metal, rectangular.

E. Nonmetallic Floor Boxes: Nonadjustable, round.

F. Small Sheet Metal Pull and Junction Boxes: NEMA OS 1.

G. Cast-Metal Access, Pull, and Junction Boxes: NEMA FB 1, galvanized, cast iron with gasketed cover.

H. Hinged-Cover Enclosures: NEMA 250, Type 1, with continuous-hinge cover with flush latch, unless otherwise indicated.

1. Metal Enclosures: Steel, finished inside and out with manufacturer's standard enamel.
2. Nonmetallic Enclosures: Plastic.

I. Cabinets:

1. NEMA 250, Type 1, galvanized-steel box with removable interior panel and removable front, finished inside and out with manufacturer's standard enamel.
2. Hinged door in front cover with flush latch and concealed hinge.
3. Key latch to match panelboards.
4. Metal barriers to separate wiring of different systems and voltage.
5. Accessory feet where required for freestanding equipment.

PART 55 - EXECUTION

55.1 RACEWAY APPLICATION

A. Outdoors: Apply raceway products as specified below, unless otherwise indicated:

1. Exposed Conduit: Rigid steel conduit.
2. Concealed Conduit, Aboveground: Rigid steel conduit.
3. Underground Conduit: RNC, Type EPC-40-PVC, direct buried.
4. Connection to Vibrating Equipment (Including Transformers and Hydraulic, Pneumatic, Electric Solenoid, or Motor-Driven Equipment): LFMC.
5. Boxes and Enclosures, Aboveground: NEMA 250, Type 3R.

B. Comply with the following indoor applications, unless otherwise indicated:

1. Exposed, Not Subject to Physical Damage: EMT.
2. Exposed, Not Subject to Severe Physical Damage: EMT.
3. Exposed and Subject to Severe Physical Damage: Rigid steel conduit. Includes raceways in the following locations:

a. Loading dock.
b. Corridors used for traffic of mechanized carts, forklifts, and pallet-handling units.
c. Mechanical rooms.

4. Concealed in Ceilings and Interior Walls and Partitions: EMT.
5. Connection to Vibrating Equipment (Including Transformers and Hydraulic, Pneumatic, Electric Solenoid, or Motor-Driven Equipment): FMC, except use LFMC in damp or wet locations.
6. Damp or Wet Locations: Rigid steel conduit.
7. Raceways for Optical Fiber or Communications Cable: EMT>.
8. Boxes and Enclosures: NEMA 250, Type 1, except use NEMA 250, Type 4, nonmetallic in damp or wet locations.

C. Minimum Raceway Size: 1/2-inch (16-mm) trade size.

D. Raceway Fittings: Compatible with raceways and suitable for use and location.

1. Rigid and Intermediate Steel Conduit: Use threaded rigid steel conduit fittings, unless otherwise indicated.

55.2 INSTALLATION

A. Comply with NECA 1 for installation requirements applicable to products specified in Part 2 except where requirements on Drawings or in this Article are stricter.

B. Keep raceways at least 6 inches (150 mm) away from parallel runs of flues and steam or hot-water pipes. Install horizontal raceway runs above water and steam piping.

C. Complete raceway installation before starting conductor installation.

D. Support raceways as specified in Division 16 Section "Electrical Supports and Seismic Restraints."

E. Arrange stub-ups so curved portions of bends are not visible above the finished slab.

F. Install no more than the equivalent of three 90-degree bends in any conduit run except for communications conduits, for which fewer bends are allowed.

G. Conceal conduit and EMT within finished walls, ceilings, and floors, unless otherwise indicated.

H. Raceways Embedded in Slabs:

1. Run conduit larger than 1-inch (27-mm) trade size, parallel or at right angles to main reinforcement. Where at right angles to reinforcement, place conduit close to slab support.
2. Arrange raceways to cross building expansion joints at right angles with expansion fittings.
3. Change from ENT to RNC, Type EPC-40-PVC, rigid steel conduit, or IMC before rising above the floor.

I. Raceway Terminations at Locations Subject to Moisture or Vibration: Use insulating bushings to protect conductors, including conductors smaller than No. 4 AWG.

J. Install pull wires in empty raceways. Use polypropylene or monofilament plastic line with not less than 200-lb (90-kg) tensile strength. Leave at least 12 inches (300 mm) of slack at each end of pull wire.

K. Raceways for Optical Fiber and Communications Cable: Install as follows:

1. 3/4-Inch (19-mm) Trade Size and Smaller: Install raceways in maximum lengths of 50 feet (15 m).
2. 1-Inch (25-mm) Trade Size and Larger: Install raceways in maximum lengths of 75 feet (23 m).
3. Install with a maximum of two 90-degree bends or equivalent for each length of raceway unless Drawings show stricter requirements. Separate lengths with pull or junction boxes or terminations at distribution frames or cabinets where necessary to comply with these requirements.

L. Install raceway sealing fittings at suitable, approved, and accessible locations and fill them with listed sealing compound. For concealed raceways, install each fitting in a flush steel box with a blank cover plate having a finish similar to that of adjacent plates or surfaces. Install raceway sealing fittings at the following points:

1. Where conduits pass from warm to cold locations, such as boundaries of refrigerated spaces.
2. Where otherwise required by NFPA 70.

M. Expansion-Joint Fittings for RNC: Install in each run of aboveground conduit that is located where environmental temperature change may exceed 30 deg F (17 deg C), and that has straight-run length that exceeds 25 feet (7.6 m).

1. Install expansion-joint fittings for each of the following locations, and provide type and quantity of fittings that accommodate temperature change listed for location:

   a. Outdoor Locations Not Exposed to Direct Sunlight: 125 deg F (70 deg C) temperature change.
   b. Outdoor Locations Exposed to Direct Sunlight: 155 deg F (86 deg C temperature change.
   c. Indoor Spaces: Connected with the Outdoors without Physical Separation: 125 deg F (70 deg C) temperature change.
   d. Attics: 135 deg F (75 deg C) > temperature change.

2. Install fitting(s) that provide expansion and contraction for at least 0.00041 inch per foot of length of straight run per deg F (0.06 mm per meter of length of straight run per deg C) of temperature change.
3. Install each expansion-joint fitting with position, mounting, and piston setting selected according to manufacturer's written instructions for conditions at specific location at the time of installation.

N. Flexible Conduit Connections: Use maximum of 72 inches (1830 mm) of flexible conduit for recessed and semi-recessed lighting fixtures, equipment subject to vibration, noise transmission, or movement; and for transformers and motors.

1. Use LFMC in damp or wet locations subject to severe physical damage.

2. Use LFMC or LFNC in damp or wet locations not subject to severe physical damage.

O. Recessed Boxes in Masonry Walls: Saw-cut opening for box in center of cell of masonry block, and install box flush with surface of wall.

P. Set metal floor boxes level and flush with finished floor surface.

Q. Set nonmetallic floor boxes level. Trim after installation to fit flush with finished floor surface.

55.3 INSTALLATION OF UNDERGROUND CONDUIT

A. Direct-Buried Conduit:

1. Excavate trench bottom to provide firm and uniform support for conduit. Prepare trench bottom as specified in Division 2 Section "Earthwork" for pipe less than 6 inches (150 mm) in nominal diameter.
2. Install backfill as specified in Division 2 Section "Earthwork."
3. After installing conduit, backfill and compact. Start at tie-in point, and work toward end of conduit run, leaving conduit at end of run free to move with expansion and contraction as temperature changes during this process. Firmly hand tamp backfill around conduit to provide maximum supporting strength. After placing controlled backfill to within 12 inches (300 mm) of finished grade, make final conduit connection at end of run and complete backfilling with normal compaction as specified in Division 2 Section "Earthwork."
4. Install manufactured duct elbows for stub-ups at poles and equipment and at building entrances through the floor, unless otherwise indicated. Encase elbows for stub-up ducts throughout the length of the elbow.
5. Install manufactured rigid steel conduit elbows for stub-ups at poles and equipment and at building entrances through the floor.

    a. Couple steel conduits to ducts with adapters designed for this purpose, and encase coupling with 3 inches (75 mm) of concrete.
    b. For stub-ups at equipment mounted on outdoor concrete bases, extend steel conduit horizontally a minimum of 60 inches (1500 mm) from edge of equipment pad or foundation. Install insulated grounding bushings on terminations at equipment.

6. Warning Planks: Bury warning planks approximately 12 inches (300 mm) above direct-buried conduits, placing them 24 inches (600 mm) o.c. Align planks along the width and along the centerline of conduit.

55.4 FIRESTOPPING

A. Apply firestopping to electrical penetrations of fire-rated floor and wall assemblies to restore original fire-resistance rating of assembly. Firestopping materials and installation requirements are specified in Division 7 Section "Through-Penetration Firestop Systems."

END OF SECTION 16130

SECTION 16140

WIRING DEVICES

PART 56 - GENERAL

56.1 SUMMARY

A. This Section includes the following:

1. Receptacles, receptacles with integral GFCI, and associated device plates.
2. Wall-box motion sensors.
3. Snap switches and wall-box dimmers.
4. Solid-state fan speed controls.
5. Wall-switch and exterior occupancy sensors.
6. Communications outlets.

B. See Division 16 Section "Voice and Data Communication Cabling" for workstation outlets.

56.2 SUBMITTALS

A. Product Data: For each type of product indicated.

B. Shop Drawings: List of legends and description of materials and process used for premarking wall plates.

C. Samples: One for each type of device and wall plate specified, in each color specified.

D. Operation and Maintenance Data: For wiring devices to include in all manufacturers' packing label warnings and instruction manuals that include labeling conditions.

56.3 QUALITY ASSURANCE

A. Electrical Components, Devices, and Accessories: Listed and labeled as defined in NFPA 70, Article 100, by a testing agency acceptable to authorities having jurisdiction, and marked for intended use.

B. Comply with NFPA 70.

PART 57 - PRODUCTS

57.1 MANUFACTURERS

A. Manufacturers' Names: Shortened versions (shown in parentheses) of the following manufacturers' names are used in other Part 2 articles:

1. Cooper Wiring Devices; a division of Cooper Industries, Inc. (Cooper).
2. Hubbell Incorporated; Wiring Device-Kellems (Hubbell).
3. Leviton Mfg. Company Inc. (Leviton).
4. Pass & Seymour/Legrand; Wiring Devices & Accessories (Pass & Seymour).

57.2 STRAIGHT BLADE RECEPTACLES

A. Convenience Receptacles, 125 V, 20 A: Comply with NEMA WD 1, NEMA WD 6 configuration 5-20R, and UL 498.

1. Products: Subject to compliance with requirements, provide one of the following:

a. Cooper; 5351 (single), 5352 (duplex).
b. Hubbell; HBL5351 (single), CR5352 (duplex).
c. Leviton; 5891 (single), 5352 (duplex).
d. Pass & Seymour; 5381 (single), 5352 (duplex).

57.3 GFCI RECEPTACLES

A. General Description: Straight blade, feed-through type. Comply with NEMA WD 1, NEMA WD 6, UL 498, and UL 943, Class A, and include indicator light that is lighted when device is tripped.

B. Duplex GFCI Convenience Receptacles, 125 V, 20 A:

1. Products: Subject to compliance with requirements, provide one of the following:

a. Cooper; GF20.
b. Pass & Seymour; 2084.

57.4 SNAP SWITCHES

A. Comply with NEMA WD 1 and UL 20.

B. Switches, 120/277 V, 20 A:

1. Products: Subject to compliance with requirements, provide one of the following:

a. Cooper; 2221 (single pole), 2222 (two pole), 2223 (three way), 2224 (four way).

b. Hubbell; CS1221 (single pole), CS1222 (two pole), CS1223 (three way), CS1224 (four way).
c. Leviton; 1221-2 (single pole), 1222-2 (two pole), 1223-2 (three way), 1224-2 (four way).
d. Pass & Seymour; 20AC1 (single pole), 20AC2 (two pole), 20AC3 (three way), 20AC4 (four way).

C. Pilot Light Switches, 20 A:

1. Products: Subject to compliance with requirements, provide one of the following:

a. Cooper; 2221PL for 120 V and 277 V.
b. Hubbell; HPL1221PL for 120 V and 277 V.
c. Leviton; 1221-PLR for 120 V, 1221-7PLR for 277 V.
d. Pass & Seymour; PS20AC1-PLR for 120 V.

2. Description: Single pole, with neon-lighted handle, illuminated when switch is "ON."

D. Key-Operated Switches, 120/277 V, 20 A:

1. Available Products: Subject to compliance with requirements, products that may be incorporated into the Work include, but are not limited to, the following:
2. Products: Subject to compliance with requirements, provide one of the following:

a. Cooper; 2221L.
b. Hubbell; HBL1221L.
c. Leviton; 1221-2L.
d. Pass & Seymour; PS20AC1-L.

3. Description: Single pole, with factory-supplied key in lieu of switch handle.

E. Single-Pole, Double-Throw, Momentary Contact, Center-Off Switches, 120/277 V, 20 A; for use with mechanically held lighting contactors.

1. Available Products: Subject to compliance with requirements, products that may be incorporated into the Work include, but are not limited to, the following:
2. Products: Subject to compliance with requirements, provide one of the following:

a. Cooper; 1995.
b. Hubbell; HBL1557.
c. Leviton; 1257.
d. Pass & Seymour; 1251.

F. Key-Operated, Single-Pole, Double-Throw, Momentary Contact, Center-Off Switches, 120/277 V, 20 A; for use with mechanically held lighting contactors, with factory-supplied key in lieu of switch handle.

1. Available Products: Subject to compliance with requirements, products that may be incorporated into the Work include, but are not limited to, the following:
2. Products: Subject to compliance with requirements, provide one of the following:

a. Cooper; 1995L.
b. Hubbell; HBL1557L.
c. Leviton; 1257L.
d. Pass & Seymour; 1251L.

57.5 WALL-BOX DIMMERS

A. Dimmer Switches: Modular, full-wave, solid-state units with integral, quiet on-off switches, with audible frequency and EMI/RFI suppression filters.

B. Control: Continuously adjustable toggle switch; with single-pole or three-way switching. Comply with UL 1472.

C. Incandescent Lamp Dimmers: 120 V; control shall follow square-law dimming curve. On-off switch positions shall bypass dimmer module.

1. 1000 W; dimmers shall require no derating when ganged with other devices. Illuminated when "OFF."

D. Fluorescent Lamp Dimmer Switches: Modular; compatible with dimmer ballasts; trim potentiometer to adjust low-end dimming; dimmer-ballast combination capable of consistent dimming with low end not greater than 20 percent of full brightness.

57.6 OCCUPANCY SENSORS

A. Wall-Switch Sensors:

1. Products: Subject to compliance with requirements, provide one of the following:

a. Cooper; 6111 for 120 V, 6117 for 277 V.
b. Hubbell; WS1277.
c. Leviton; ODS 10-ID.
d. Pass & Seymour; WS3000.
e. Watt Stopper (The); WS-200.

2. Description: Passive-infrared type, 120/277 V, adjustable time delay up to 30 minutes, 180-degree field of view, with a minimum coverage area of 900 sq. ft. (84 sq. m).

B. Wall-Switch Sensors:

1. Products: Subject to compliance with requirements, provide one of the following:

a. Hubbell; AT120 for 120 V, AT277 for 277 V.
b. Leviton; ODS 15-ID.

2. Description: Adaptive-technology type, 120/277 V, adjustable time delay up to 20 minutes, 180-degree field of view, with a minimum coverage area of 900 sq. ft. (84 sq. m).

57.7 COMMUNICATIONS OUTLETS

A. Telephone Outlet:

1. Products: Subject to compliance with requirements, provide one of the following:

   a. Cooper; 3560-6.
   b. Leviton; 40649.

2. Description: Single RJ-45 jack for terminating 100-ohm, balanced, four-pair UTP; TIA/EIA-568-B.1 complying with Category 5e. Comply with UL 1863.

B. Combination TV and Telephone Outlet:

1. Available Products: Subject to compliance with requirements, products that may be incorporated into the Work include, but are not limited to, the following:

   a. Cooper; 3562.
   b. Leviton; 40595.

2. Description: Single RJ-45 jack for 100-ohm, balanced, four-pair UTP; TIA/EIA-568-B.1; complying with Category 5e; and one Type F coaxial cable connector.

57.8 WALL PLATES

A. Single and combination types to match corresponding wiring devices.

1. Plate-Securing Screws: Metal with head color to match plate finish.
2. Material for Finished Spaces: 0.035-inch- (1-mm-) thick, satin-finished stainless steel.
3. Material for Unfinished Spaces: Galvanized steel.
4. Material for Damp Locations: Cast aluminum with spring-loaded lift cover, and listed and labeled for use in "wet locations."

B. Wet-Location, Weatherproof Cover Plates: NEMA 250, complying with type 3R weather-resistant , die-cast aluminum with lockable cover.

57.9 FLOOR SERVICE FITTINGS

A. Type: Modular, flap-type, dual-service units suitable for wiring method used.

B. Compartments: Barrier separates power from voice and data communication cabling.

C. Service Plate: Rectangular solid brass with satin finish.

D. Power Receptacle: NEMA WD 6 configuration 5-20R, gray finish, unless otherwise indicated.

E. Voice and Data Communication Outlet: Two modular, keyed, color-coded, RJ-45 Category 5e jacks for UTP cable.

57.10 FINISHES

A. Color: Wiring device catalog numbers in Section Text do not designate device color.

1. Wiring Devices Connected to Normal Power System: As selected by Architect, unless otherwise indicated or required by NFPA 70 or device listing.
2. Wiring Devices Connected to Emergency Power System: Red.
3. TVSS Devices: Blue.

PART 58 - EXECUTION

58.1 INSTALLATION

A. Comply with NECA 1, including the mounting heights listed in that standard, unless otherwise noted.

B. Coordination with Other Trades:

1. Take steps to insure that devices and their boxes are protected. Do not place wall finish materials over device boxes and do not cut holes for boxes with routers that are guided by riding against outside of the boxes.
2. Keep outlet boxes free of plaster, drywall joint compound, mortar, cement, concrete, dust, paint, and other material that may contaminate the raceway system, conductors, and cables.
3. Install device boxes in brick or block walls so that the cover plate does not cross a joint unless the joint is troweled flush with the face of the wall.
4. Install wiring devices after all wall preparation, including painting, is complete.

C. Conductors:

1. Do not strip insulation from conductors until just before they are spliced or terminated on devices.
2. Strip insulation evenly around the conductor using tools designed for the purpose. Avoid scoring or nicking of solid wire or cutting strands from stranded wire.
3. The length of free conductors at outlets for devices shall meet provisions of NFPA 70, Article 300, without pigtails.
4. Existing Conductors:

a. Cut back and pigtail, or replace all damaged conductors.
b. Straighten conductors that remain and remove corrosion and foreign matter.
c. Pigtailing existing conductors is permitted provided the outlet box is large enough.

D. Device Installation:

1. Replace all devices that have been in temporary use during construction or that show signs that they were installed before building finishing operations were complete.
2. Keep each wiring device in its package or otherwise protected until it is time to connect conductors.
3. Do not remove surface protection, such as plastic film and smudge covers, until the last possible moment.
4. Connect devices to branch circuits using pigtails that are not less than 6 inches (152 mm) in length.
5. When there is a choice, use side wiring with binding-head screw terminals. Wrap solid conductor tightly clockwise, 2/3 to 3/4 of the way around terminal screw.
6. Use a torque screwdriver when a torque is recommended or required by the manufacturer.
7. When conductors larger than No. 12 AWG are installed on 15- or 20-A circuits, splice No. 12 AWG pigtails for device connections.
8. Tighten unused terminal screws on the device.
9. When mounting into metal boxes, remove the fiber or plastic washers used to hold device mounting screws in yokes, allowing metal-to-metal contact.

E. Receptacle Orientation:

1. Install ground pin of vertically mounted receptacles down, and on horizontally mounted receptacles to the right.

F. Device Plates: Do not use oversized or extra-deep plates. Repair wall finishes and remount outlet boxes when standard device plates do not fit flush or do not cover rough wall opening.

G. Dimmers:

1. Install dimmers within terms of their listing.
2. Verify that dimmers used for fan speed control are listed for that application.
3. Install unshared neutral conductors on line and load side of dimmers according to manufacturers' device listing conditions in the written instructions.

H. Arrangement of Devices: Unless otherwise indicated, mount flush, with long dimension vertical and with grounding terminal of receptacles on top. Group adjacent switches under single, multi-gang wall plates.

58.2 IDENTIFICATION

A. Comply with Division 16 Section "Electrical Identification."

1. Receptacles: Identify panelboard and circuit number from which served. Use hot, stamped or engraved machine printing with white-filled lettering on face of plate, and durable wire markers or tags inside outlet boxes.

58.3 FIELD QUALITY CONTROL

A. Perform tests and inspections and prepare test reports.

1. Test Instruments: Use instruments that comply with UL 1436.
2. Test Instrument for Convenience Receptacles: Digital wiring analyzer with digital readout or illuminated LED indicators of measurement.

B. Tests for Convenience Receptacles:

1. Line Voltage: Acceptable range is 105 to 132 V.
2. Percent Voltage Drop under 15-A Load: A value of 6 percent or higher is not acceptable.
3. Ground Impedance: Values of up to 2 ohms are acceptable.
4. GFCI Trip: Test for tripping values specified in UL 1436 and UL 943.
5. Using the test plug, verify that the device and its outlet box are securely mounted.
6. The tests shall be diagnostic, indicating damaged conductors, high resistance at the circuit breaker, poor connections, inadequate fault current path, defective devices, or similar problems. Correct circuit conditions, remove malfunctioning units and replace with new, and retest as specified above.

END OF SECTION 16140

SECTION 16145

LIGHTING CONTROL DEVICES

PART 59 - GENERAL

59.1 SUMMARY

A. This Section includes the following lighting control devices:

1. Time switches.
2. Indoor occupancy sensors.

B. See Division 16 Section "Wiring Devices" for wall-box dimmers, wall-switch occupancy sensors, and manual light switches.

59.2 SUBMITTALS

A. Product Data: For each type of product indicated.

B. Field quality-control test reports.

C. Operation and maintenance data.

59.3 QUALITY ASSURANCE

A. Electrical Components, Devices, and Accessories: Listed and labeled as defined in NFPA 70, Article 100, by a testing agency acceptable to authorities having jurisdiction, and marked for intended use.

PART 60 - PRODUCTS

60.1 TIME SWITCHES

A. Available Manufacturers: Subject to compliance with requirements, manufacturers offering products that may be incorporated into the Work include, but are not limited to, the following:

B. Manufacturers: Subject to compliance with requirements, provide products by one of the following:

C. Basis-of-Design Product: Subject to compliance with requirements, provide the product indicated on Drawings or a comparable product by one of the following:

1. Area Lighting Research, Inc.; Tyco Electronics.

2. Grasslin Controls Corporation; a GE Industrial Systems Company.
3. Intermatic, Inc.
4. Leviton Mfg. Company Inc.
5. Lightolier Controls; a Genlyte Company.
6. Lithonia Lighting; Acuity Lighting Group, Inc.
7. Paragon Electric Co.; Invensys Climate Controls.
8. Square D; Schneider Electric.
9. TORK.
10. Touch-Plate, Inc.
11. Watt Stopper (The).

D. Electronic Time Switches: Electronic, solid-state programmable units with alphanumeric display; complying with UL 917.

1. Contact Configuration: DPST.
2. Contact Rating: 30-A inductive or resistive, 240-V ac.
3. Program: 8 on-off set points on a 24-hour schedule and an annual holiday schedule that overrides the weekly operation on holidays.
4. Program: 2 on-off set points on a 24-hour schedule, allowing different set points for each day of the week and an annual holiday schedule that overrides the weekly operation on holidays.
5. Programs: 2 channels; each channel shall be individually programmable with 8 on-off set points on a 24-hour schedule.
6. Circuitry: Allow connection of a photoelectric relay as substitute for on-off function of a program.
7. Astronomic Time: All channels.
8. Battery Backup: For schedules and time clock.

60.2 INDOOR OCCUPANCY SENSORS

A. Available Manufacturers: Subject to compliance with requirements, manufacturers offering products that may be incorporated into the Work include, but are not limited to, the following:

B. Manufacturers: Subject to compliance with requirements, provide products by one of the following:

C. Basis-of-Design Product: Subject to compliance with requirements, provide the product indicated on Drawings or a comparable product by one of the following:

1. Hubbell Lighting.
2. Leviton Mfg. Company Inc.
3. Lithonia Lighting; Acuity Lighting Group, Inc.
4. Novitas, Inc.
5. RAB Lighting, Inc.
6. Sensor Switch, Inc.
7. TORK.
8. Watt Stopper (The).

D. General Description: Wall- or ceiling-mounting, solid-state units with a separate relay unit.

1. Operation: Unless otherwise indicated, turn lights on when covered area is occupied and off when unoccupied; with a time delay for turning lights off, adjustable over a minimum range of 1 to 15 minutes.
2. Sensor Output: Contacts rated to operate the connected relay, complying with UL 773A. Sensor shall be powered from the relay unit.
3. Relay Unit: Dry contacts rated for 20-A ballast load at 120- and 277-V ac, for 13-A tungsten at 120-V ac, and for 1 hp at 120-V ac. Power supply to sensor shall be 24-V dc, 150-mA, Class 2 power source as defined by NFPA 70.
4. Mounting:

    a. Sensor: Suitable for mounting in any position on a standard outlet box.
    b. Relay: Externally mounted through a 1/2-inch (13-mm) knockout in a standard electrical enclosure.
    c. Time-Delay and Sensitivity Adjustments: Recessed and concealed behind hinged door.

5. Indicator: LED, to show when motion is being detected during testing and normal operation of the sensor.
6. Bypass Switch: Override the on function in case of sensor failure.
7. Automatic Light-Level Sensor: Adjustable from 2 to 200 fc (21.5 to 2152 lx); keep lighting off when selected lighting level is present.

E. PIR Type: Ceiling mounting; detect occupancy by sensing a combination of heat and movement in area of coverage.

1. Detector Sensitivity: Detect occurrences of 6-inch- (150-mm-) minimum movement of any portion of a human body that presents a target of not less than 36 sq. in. (232 sq. cm).
2. Detection Coverage (Room): Detect occupancy anywhere in a circular area of 1000 sq. ft. (93 sq. m) when mounted on a 96-inch- (2440-mm-) high ceiling.
3. Detection Coverage (Corridor): Detect occupancy within 90 feet (27.4 m) when mounted on a 10-foot- (3-m-) high ceiling.

60.3 CONDUCTORS AND CABLES

A. Power Wiring to Supply Side of Remote-Control Power Sources: Not smaller than No. 12 AWG. Comply with requirements in Division 16 Section "Conductors and Cables."

PART 61 - EXECUTION

61.1 SENSOR INSTALLATION

A. Install and aim sensors in locations to achieve not less than 90 percent coverage of areas indicated. Do not exceed coverage limits specified in manufacturer's written instructions.

B. When requested within 12 months of date of Substantial Completion, provide on-site assistance in adjusting sensors to suit actual occupied conditions. Provide up to two visits to Project during other than normal occupancy hours for this purpose.

61.2 CONTACTOR INSTALLATION

A. Mount electrically held lighting contactors with elastomeric isolator pads, to eliminate structure-borne vibration, unless contactors are installed in an enclosure with factory-installed vibration isolators.

61.3 WIRING INSTALLATION

A. Wiring Method: Comply with Division 16 Section "Conductors and Cables." Minimum conduit size shall be 1/2 inch (13 mm).

B. Wiring within Enclosures: Comply with NECA 1. Separate power-limited and non power-limited conductors according to conductor manufacturer's written instructions.

C. Size conductors according to lighting control device manufacturer's written instructions, unless otherwise indicated.

D. Splices, Taps, and Terminations: Make connections only on numbered terminal strips in junction, pull, and outlet boxes; terminal cabinets; and equipment enclosures.

61.4 IDENTIFICATION

A. Identify components and power and control wiring according to Division 16 Section "Electrical Identification."
   1. Identify circuits or luminaries controlled by photoelectric or occupancy sensors at each sensor.

B. Label time switches and contactors with a unique designation.

61.5 FIELD QUALITY CONTROL

A. Perform the following field tests and inspections and prepare test reports:

   1. After installing time switches and sensors, and after electrical circuitry has been energized, adjust and test for compliance with requirements.

2. Operational Test: Verify operation of each lighting control device, and adjust time delays.

B. Lighting control devices that fail tests and inspections are defective work.

END OF SECTION 16145

SECTION 16410

ENCLOSED SWITCHES AND CIRCUIT BREAKERS

PART 62 - GENERAL

62.1 SUMMARY

A. Section Includes:

1. Fusible switches.
2. Nonfusible switches.
3. Molded-case circuit breakers (MCCBs).
4. Enclosures.

62.2 DEFINITIONS

A. NC: Normally closed.

B. NO: Normally open.

C. SPDT: Single pole, double throw.

62.3 PERFORMANCE REQUIREMENTS

A. Seismic Performance: Enclosed switches and circuit breakers shall withstand the effects of earthquake motions determined according to ASCE/SEI 7.

1. The term "withstand" means "the unit will remain in place without separation of any parts from the device when subjected to the seismic forces specified and the unit will be fully operational after the seismic event."

62.4 SUBMITTALS

A. Product Data: For each type of enclosed switch, circuit breaker, accessory, and component indicated.

B. Shop Drawings: For enclosed switches and circuit breakers. Include plans, elevations, sections, details, and attachments to other work.

1. Wiring Diagrams: For power, signal, and control wiring.

C. Seismic Qualification Certificates: For enclosed switches and circuit breakers, accessories, and components, from manufacturer.

D. Field quality-control reports.

E. Operation and maintenance data.

62.5 QUALITY ASSURANCE

A. Electrical Components, Devices, and Accessories: Listed and labeled as defined in NFPA 70, by a qualified testing agency, and marked for intended location and application.

B. Comply with NFPA 70.

PART 63 - PRODUCTS

63.1 FUSIBLE SWITCHES

A. Manufacturers: Subject to compliance with requirements, manufacturers offering products that may be incorporated into the Work include, but are not limited to, the following:

B. Basis-of-Design Product: Subject to compliance with requirements, provide product indicated on Drawings or comparable product by one of the following:

1. Eaton Electrical Inc.; Cutler-Hammer Business Unit.
2. General Electric Company; GE Consumer & Industrial - Electrical Distribution.
3. Siemens Energy & Automation, Inc.
4. Square D; a brand of Schneider Electric.

C. Type GD, General Duty, Single Throw, 240-V ac, 800 A and Smaller: UL 98 and NEMA KS 1, horsepower rated, with cartridge fuse interiors to accommodate specified fuses, lockable handle with capability to accept two padlocks, and interlocked with cover in closed position.

D. Type HD, Heavy Duty, Single Throw, 600-V ac, 1200 A and Smaller: UL 98 and NEMA KS 1, horsepower rated, with clips or bolt pads to accommodate specified fuses, lockable handle with capability to accept three padlocks, and interlocked with cover in closed position.

E. Type HD, Heavy Duty, Three Pole, Single Throw, 600-V ac, 200 A and Smaller: UL 98 and NEMA KS 1, horsepower rated, with clips or bolt pads to accommodate specified fuses, lockable handle with capability to accept three padlocks, and interlocked with cover in closed position.

F. Type HD, Heavy Duty, Double Throw, 600-V ac, 1200 A and Smaller: UL 98 and NEMA KS 1, horsepower rated, with clips or bolt pads to accommodate specified fuses, lockable handle with capability to accept three padlocks, and interlocked with cover in closed position.

G. Accessories:

1. Equipment Ground Kit: Internally mounted and labeled for copper and aluminum ground conductors.
2. Neutral Kit: Internally mounted; insulated, capable of being grounded and bonded; labeled for copper and aluminum neutral conductors.
3. Class R Fuse Kit: Provides rejection of other fuse types when Class R fuses are specified.
4. Lugs: Suitable for number, size, and conductor material.
5. Service-Rated Switches: Labeled for use as service equipment.

63.2 NONFUSIBLE SWITCHES

A. Manufacturers: Subject to compliance with requirements, available manufacturers offering products that may be incorporated into the Work include, but are not limited to, the following:

B. Basis-of-Design Product: Subject to compliance with requirements, provide product indicated on Drawings or comparable product by one of the following:

1. Eaton Electrical Inc.; Cutler-Hammer Business Unit.
2. General Electric Company; GE Consumer & Industrial - Electrical Distribution.
3. Siemens Energy & Automation, Inc.
4. Square D; a brand of Schneider Electric.

C. Type GD, General Duty, Single Throw, 600 A and Smaller: UL 98 and NEMA KS 1, horsepower rated, lockable handle with capability to accept two padlocks, and interlocked with cover in closed position.

D. Type HD, Heavy Duty, Single Throw, 600-V ac, 1200 A and Smaller: UL 98 and NEMA KS 1, horsepower rated, lockable handle with capability to accept three padlocks, and interlocked with cover in closed position.

E. Accessories:

1. Equipment Ground Kit: Internally mounted and labeled for copper and aluminum ground conductors.
2. Neutral Kit: Internally mounted; insulated, capable of being grounded and bonded; labeled for copper and aluminum neutral conductors.
3. Lugs: Suitable for number, size, and conductor material.

63.3 MOLDED-CASE CIRCUIT BREAKERS

A. Manufacturers: Subject to compliance with requirements, available manufacturers offering products that may be incorporated into the Work include, but are not limited to, the following:

B. Basis-of-Design Product: Subject to compliance with requirements, provide product indicated on Drawings or comparable product by one of the following:

1. Eaton Electrical Inc.; Cutler-Hammer Business Unit.

2. General Electric Company; GE Consumer & Industrial - Electrical Distribution.
3. Siemens Energy & Automation, Inc.
4. Square D; a brand of Schneider Electric.

C. General Requirements: Comply with UL 489, NEMA AB 1, and NEMA AB 3, with interrupting capacity to comply with available fault currents.

D. Thermal-Magnetic Circuit Breakers: Inverse time-current element for low-level overloads and instantaneous magnetic trip element for short circuits. Adjustable magnetic trip setting for circuit-breaker frame sizes 250 A and larger.

E. Electronic Trip Circuit Breakers: Field-replaceable rating plug, rms sensing, with the following field-adjustable settings:

1. Instantaneous trip.
2. Long- and short-time pickup levels.
3. Long- and short-time time adjustments.
4. Ground-fault pickup level, time delay, and I^2t response.

F. Current-Limiting Circuit Breakers: Frame sizes 400 A and smaller, and let-through ratings less than NEMA FU 1, RK-5.

G. Features and Accessories:

1. Standard frame sizes, trip ratings, and number of poles.
2. Lugs: Suitable for number, size, trip ratings, and conductor material.
3. Application Listing: Appropriate for application; Type SWD for switching fluorescent lighting loads; Type HID for feeding fluorescent and high-intensity discharge lighting circuits.
4. Ground-Fault Protection: Comply with UL 1053; integrally mounted, self-powered type with mechanical ground-fault indicator; relay with adjustable pickup and time-delay settings, push-to-test feature, internal memory, and shunt trip unit; and three-phase, zero-sequence current transformer/sensor.
5. Shunt Trip: Trip coil energized from separate circuit, with coil-clearing contact.

63.4 ENCLOSURES

A. Enclosed Switches and Circuit Breakers: NEMA AB 1, NEMA KS 1, NEMA 250, and UL 50, to comply with environmental conditions at installed location.

1. Indoor, Dry and Clean Locations: NEMA 250, Type 1.
2. Outdoor Locations: NEMA 250, Type 3R.
3. Other Wet or Damp, Indoor Locations: NEMA 250, Type 3R.
4. Indoor Locations Subject to Dust, Falling Dirt, and Dripping Noncorrosive Liquids: NEMA 250, Type 12.

PART 64 - EXECUTION

64.1 INSTALLATION

A. Install individual wall-mounted switches and circuit breakers with tops at uniform height unless otherwise indicated.

B. Comply with mounting and anchoring requirements specified in Division 16 Section "Vibration and Seismic Controls for Electrical Systems."

C. Temporary Lifting Provisions: Remove temporary lifting eyes, channels, and brackets and temporary blocking of moving parts from enclosures and components.

D. Install fuses in fusible devices.

E. Comply with NECA 1.

64.2 IDENTIFICATION

A. Comply with requirements in Division 16 Section "Electrical Identification."

1. Identify field-installed conductors, interconnecting wiring, and components; provide warning signs.
2. Label each enclosure with engraved metal or laminated-plastic nameplate.

64.3 FIELD QUALITY CONTROL

A. Perform tests and inspections.

B. Acceptance Testing Preparation:

1. Test insulation resistance for each enclosed switch and circuit breaker, component, connecting supply, feeder, and control circuit.
2. Test continuity of each circuit.

C. Tests and Inspections:

1. Perform each visual and mechanical inspection and electrical test stated in NETA Acceptance Testing Specification. Certify compliance with test parameters.
2. Correct malfunctioning units on-site, where possible, and retest to demonstrate compliance; otherwise, replace with new units and retest.

D. Enclosed switches and circuit breakers will be considered defective if they do not pass tests and inspections.

E. Prepare test and inspection reports, including a certified report that identifies enclosed switches and circuit breakers and that describes scanning results. Include notation of deficiencies detected, remedial action taken, and observations after remedial action.

END OF SECTION 16410

SECTION 16442

PANELBOARDS

PART 65 - GENERAL

65.1 SUMMARY

A. Section includes distribution panelboards and lighting and appliance branch-circuit panelboards.

65.2 PERFORMANCE REQUIREMENTS

A. Seismic Performance: Panelboards shall withstand the effects of earthquake motions determined according to SEI/ASCE 7.

1. The term "withstand" means "the unit will remain in place without separation of any parts from the device when subjected to the seismic forces specified and the unit will be fully operational after the seismic event."

65.3 SUBMITTALS

A. Product Data: For each type of product indicated.

B. Shop Drawings: For each panelboard and related equipment.

1. Include dimensioned plans, elevations, sections, and details. Show tabulations of installed devices, equipment features, and ratings.
2. Detail enclosure types and details for types other than NEMA 250, Type 1.
3. Detail bus configuration, current, and voltage ratings.
4. Short-circuit current rating of panelboards and overcurrent protective devices.
5. Include evidence of NRTL listing for series rating of installed devices.
6. Detail features, characteristics, ratings, and factory settings of individual overcurrent protective devices and auxiliary components.
7. Include wiring diagrams for power, signal, and control wiring.
8. Include time-current coordination curves for each type and rating of overcurrent protective device included in panelboards.

C. Seismic Qualification Certificates: Submit certification that panelboards, overcurrent protective devices, accessories, and components will withstand seismic forces defined in Division 16 Section "Vibration and Seismic Controls for Electrical Systems."

D. Field quality-control reports.

E. Panelboard schedules for installation in panelboards.

F. Operation and maintenance data.

65.4 QUALITY ASSURANCE

A. Electrical Components, Devices, and Accessories: Listed and labeled as defined in NFPA 70, by a qualified testing agency, and marked for intended location and application.

B. Comply with NEMA PB 1.

C. Comply with NFPA 70.

65.5 WARRANTY

A. Special Warranty: Manufacturer's standard form in which manufacturer agrees to repair or replace transient voltage suppression devices that fail in materials or workmanship within specified warranty period.

1. Warranty Period: Five years from date of Substantial Completion.

PART 66 - PRODUCTS

66.1 GENERAL REQUIREMENTS FOR PANELBOARDS

A. Fabricate and test panelboards according to IEEE 344 to withstand seismic forces defined in Division 16 Section "Vibration and Seismic Controls for Electrical Systems."

B. Enclosures: Flush-mounted cabinets.

1. Rated for environmental conditions at installed location.

a. Indoor Dry and Clean Locations: NEMA 250, Type 1.

2. Front: Secured to box with concealed trim clamps. For surface-mounted fronts, match box dimensions; for flush-mounted fronts, overlap box.
3. Hinged Front Cover: Entire front trim hinged to box and with standard door within hinged trim cover.
4. Directory Card: Inside panelboard door, mounted in transparent card holder.

C. Incoming Mains Location: Top and bottom.

D. Phase, Neutral, and Ground Buses: Hard-drawn copper, 98 percent conductivity.

E. Conductor Connectors: Suitable for use with conductor material and sizes.

1. Material: Hard-drawn copper, 98 percent conductivity.
2. Main and Neutral Lugs: Mechanical] type.
3. Ground Lugs and Bus Configured Terminators: Compression type.
4. Feed-Through Lugs: Mechanical type, suitable for use with conductor material. Locate at opposite end of bus from incoming lugs or main device.

5. Sub feed (Double) Lugs: Mechanical type suitable for use with conductor material. Locate at same end of bus as incoming lugs or main device.

F. Future Devices: Mounting brackets, bus connections, filler plates, and necessary appurtenances required for future installation of devices.

G. Panelboard Short-Circuit Current Rating: Rated for series-connected system with integral or remote upstream overcurrent protective devices and labeled by an NRTL. Include size and type of allowable upstream and branch devices, and listed and labeled for series-connected short-circuit rating by an NRTL.

H. Panelboard Short-Circuit Current Rating: Fully rated to interrupt symmetrical short-circuit current available at terminals.

66.2 DISTRIBUTION PANELBOARDS

A. Manufacturers: Subject to compliance with requirements, available manufacturers offering products that may be incorporated into the Work include, but are not limited to, the following:

B. Basis-of-Design Product: Subject to compliance with requirements, provide product indicated on Drawings or comparable product by one of the following:

1. Eaton Electrical Inc.; Cutler-Hammer Business Unit.
2. General Electric Company; GE Consumer & Industrial - Electrical Distribution.
3. Siemens Energy & Automation, Inc.
4. Square D; a brand of Schneider Electric.

C. Panelboards: NEMA PB 1, power and feeder distribution type.

D. Doors: Secured with vault-type latch with tumbler lock; keyed alike.

E. Mains: Main Circuit Breaker.

F. Branch Overcurrent Protective Devices: For Circuit-Breaker Frame Sizes 125 A and Smaller: Bolt-on circuit breakers.

G. Branch Overcurrent Protective Devices: For Circuit-Breaker Frame Sizes Larger than 125 A: Bolt-on circuit breakers; plug-in circuit breakers where individual positive-locking device requires mechanical release for removal.

H. Branch Overcurrent Protective Devices: Fused switches.

66.3 DISCONNECTING AND OVERCURRENT PROTECTIVE DEVICES

A. Manufacturers: Subject to compliance with requirements, available manufacturers offering products that may be incorporated into the Work include, but are not limited to, the following:

B. Basis-of-Design Product: Subject to compliance with requirements, provide product indicated on Drawings or comparable product by one of the following:

1. Eaton Electrical Inc.; Cutler-Hammer Business Unit.
2. General Electric Company; GE Consumer & Industrial - Electrical Distribution.
3. Siemens Energy & Automation, Inc.
4. Square D; a brand of Schneider Electric.

C. Molded-Case Circuit Breaker (MCCB): Comply with UL 489, with interrupting capacity to meet available fault currents.

1. Thermal-Magnetic Circuit Breakers: Inverse time-current element for low-level overloads, and instantaneous magnetic trip element for short circuits. Adjustable magnetic trip setting for circuit-breaker frame sizes 250 A and larger.
2. Adjustable Instantaneous-Trip Circuit Breakers: Magnetic trip element with front-mounted, field-adjustable trip setting.
3. Electronic trip circuit breakers with rms sensing; field-replaceable rating plug or field-replicable electronic trip; and the following field-adjustable settings:

    a. Instantaneous trip.
    b. Long- and short-time pickup levels.
    c. Long- and short-time time adjustments.
    d. Ground-fault pickup level, time delay, and I^2t response.

4. Current-Limiting Circuit Breakers: Frame sizes 400 A and smaller; let-through ratings less than NEMA FU 1, RK-5.
5. GFCI Circuit Breakers: Single- and two-pole configurations with Class A ground-fault protection (6-mA trip).
6. Ground-Fault Equipment Protection (GFEP) Circuit Breakers: Class B ground-fault protection (30-mA trip).
7. Arc-Fault Circuit Interrupter (AFCI) Circuit Breakers: Comply with UL 1699; 120/240-V, single-pole configuration.
8. Molded-Case Circuit-Breaker (MCCB) Features and Accessories:

    a. Standard frame sizes, trip ratings, and number of poles.
    b. Lugs: Mechanical style, suitable for number, size, trip ratings, and conductor materials.
    c. Application Listing: Appropriate for application; Type SWD for switching fluorescent lighting loads; Type HID for feeding fluorescent and high-intensity discharge (HID) lighting circuits.
    d. Handle Clamp: Loose attachment, for holding circuit-breaker handle in on position.

D. Fused Switch: NEMA KS 1, Type HD; clips to accommodate specified fuses; lockable handle.

1. Fuses, and Spare-Fuse Cabinet: Comply with requirements specified in Division 16 Section "Fuses."

66.4 ACCESSORY COMPONENTS AND FEATURES

A. Portable Test Set: For testing functions of solid-state trip devices without removing from panelboard. Include relay and meter test plugs suitable for testing panelboard meters and switchboard class relays.

PART 67 - EXECUTION

67.1 INSTALLATION

A. Receive, inspect, handle, store and install panelboards and accessories according to NEMA PB 1.1.

B. Comply with mounting and anchoring requirements specified in Division 16 Section "Vibration and Seismic Controls for Electrical Systems."

C. Mount top of trim 90 inches (2286 mm) above finished floor unless otherwise indicated.

D. Mount panelboard cabinet plumb and rigid without distortion of box. Mount recessed panelboards with fronts uniformly flush with wall finish and mating with back box.

E. Install overcurrent protective devices and controllers not already factory installed.

1. Set field-adjustable, circuit-breaker trip ranges.

F. Install filler plates in unused spaces.

G. Stub four 1-inch (27-GRC) empty conduits from panelboard into accessible ceiling space or space designated to be ceiling space in the future. Stub four 1-inch (27-GRC) empty conduits into raised floor space or below slab not on grade.

H. Arrange conductors in gutters into groups and bundle and wrap with wire ties.

I. Comply with NECA 1.

67.2 IDENTIFICATION

A. Identify field-installed conductors, interconnecting wiring, and components; provide warning signs complying with Division 16 Section "Electrical Identification."

B. Create a directory to indicate installed circuit loads and incorporating Owner's final room designations. Obtain approval before installing. Use a computer or typewriter to create directory; handwritten directories are not acceptable.

C. Panelboard Nameplates: Label each panelboard with a nameplate complying with requirements for identification specified in Division 16 Section "Electrical Identification."

D. Device Nameplates: Label each branch circuit device in distribution panelboards with a nameplate complying with requirements for identification specified in Division 16 Section "Electrical Identification."

67.3 FIELD QUALITY CONTROL

A. Perform tests and inspections.

B. Acceptance Testing Preparation:

1. Test insulation resistance for each panelboard bus, component, connecting supply, feeder, and control circuit.
2. Test continuity of each circuit.

C. Tests and Inspections:

1. Perform each visual and mechanical inspection and electrical test stated in NETA Acceptance Testing Specification. Certify compliance with test parameters.
2. Correct malfunctioning units on-site, where possible, and retest to demonstrate compliance; otherwise, replace with new units and retest.

D. Panelboards will be considered defective if they do not pass tests and inspections.

E. Prepare test and inspection reports, including a certified report that identifies panelboards included and that describes scanning results. Include notation of deficiencies detected, remedial action taken, and observations after remedial action.

END OF SECTION 16442

EXHIBITS

- **Exhibit 1: Architectural Drawings**

A-0.0 TITLE PAGE
A-1.1 EXISTING FLOOR PLAN
A-1.2 PROPOSED FLOOR PLAN
A-1.3 DEMO PLAN
A-1.4 ENTRY PLAN
A-1.5 ROOM FINISH PLAN
A-2.1 STOREFRONT SECTIONS
A-2.2 MISCELLANEOUS DETAILS
A-2.3 DESK DETAILS
A-3.1 ROOM FINISH/DOOR SCHEDULE
A-3.2 WINDOW SCHEDULE

- **Exhibit 2: Mechanical Electrical Drawings**

M-1.0 EXISTING MECHANICAL FLOOR PLAN
M-1.1 PROPOSED FLOOR PLAN
E-0.1 LAY-IN FLUORESCENT FIXTURE DETAIL
E-1.0 EXISTING POWER PLAN
E-1.1 PROPOSED POWER PLAN
E-2.0 EXISTING AND PROPOSED LIGHTING PLAN

FULTON COUNTY JUVENILE COURT BUILDING ENTRANCE SECURITY RENOVATION

395 PRYOR STREET SW
ATLANTA, GEORGIA 30312

FOR THE BOARD OF COMMISSIONERS OF FULTON COUNTY

Architect
Studio ALA, LLC.
2221 Peachtree Road, NE suite D-328
Atlanta, GA 30309
Phone: 404-477-2024
Fax: 404-477-2039
Att: George Hornbein, RA

Mechanical & Electrical Engineers
Loush Design Group, Inc.
10510 Haynes Bridge Rd.
Alpharetta, GA 30022
tel: 770-343-6336
fax: 678-297-3985
Att: M. A. Loush, PE

VICINITY MAP

APPLICABLE CODES

- INTERNATIONAL BUILDING CODE(IBC) – 2006 EDITION WITH 2007, 2009 & 2010 GEORGIA STATE AMENDMENTS
- INTERNATIONAL MECHANICAL CODE (IMC) – 2006 EDITION WITH 2007, 2009 & 2010 GEORGIA STATE AMENDMENTS
- NFPA NATIONAL ELECTRICAL CODE – 2008 EDITION WITH 2008 GEORGIA STATE AMENDMENTS
- INTERNATIONAL ENERGY CONSERVATION CODE – 2006 EDITION WITH 2008 & 2008 GEORGIA STATE SUPPLEMENTS & AMENDMENTS
- INTERNATIONAL FIRE CODE – 2006 EDITION WITH 2007 AMENDMENTS
- NFPA 101 LIFE SAFETY CODE 2006 EDITION WITH 2007 AMENDMENTS.
- THE NFPA CODES AND STANDARDS AS ADOPTED AND MODIFIED BY THE STATE FIRE MARSHAL.
- TITLE 25 OCGA, TITLE 30 OCGA GEORGIA ACCESSIBILITY CODE.

ARCHITECTURAL SYMBOLS

DRAWING TITLE
DETAIL SYMBOL
ELEVATION SYMBOL
REVISION SYMBOL
WINDOW TAG
DOOR TAG
FIRE EXTINGUISHER
PIPE BOLLARD
C.J. CONTROL JOINT

PROJECT DATA

DESCRIPTION
RENOVATION TO ENTRY, LOBBY AND CONTROL ROOM FULTON CO. JUVENILE COURT BUILDING

CONSTRUCTION CLASSIFICATION
TYPE I-B, FULLY-SPRINKLERED

OCCUPANCY CLASSIFICATION
MIXED WITH THE FOLLOWING OCCUPANCIES:
BUSINESS GROUP B (OFFICES)
ASSEMBLY A-3 (COURTROOM)

AREA

BY AREA:	
ENTRY:	330 SQUARE FOOT
LOBBY, HALLWAYS:	1,048 SQUARE FOOT
CONTROL RM, PAT-DOWN RM:	335 SQUARE FOOT
BY OCCUPANCY:	
BUSINESS:	1,713 SQUARE FOOT
GRAND TOTAL:	1,713 SQUARE FOOT

CODE ANALYSIS

A. EXISTING FIRE-RESISTANCE RATING REQUIREMENTS FOR WALLS SURROUNDING LOBBY 2 HR
B. FIRE-RESISTANCE RATING FOR WALLS TO BE RENOVATED: 2 HR
C. TRAVEL DISTANCE TO EXITS – NO CHANGE
D. NUMBER OF EXITS
EXISTING 2
NEW 4
E. EXIT DOOR WIDTH
EXISTING 12'-0"
NEW 14'-0"
C. STAIR WIDTH – NO CHANGE

GENERAL NOTES

1. DO NOT SCALE DRAWINGS, USE ONLY WRITTEN DIMENSIONS. SUBMIT TO ARCHITECT ANY DISCREPANCIES FOR CLARIFICATION.
2. ALL WORK SHALL BE IN COMPLIANCE WITH THE APPLICABLE BUILDING CODES, RECOGNIZED INDUSTRY STANDARDS, CRAFTSMANSHIP STANDARDS, AND ALL MANUFACTURERS RECOMMENDATIONS.
3. THE CONTRACTORS SHALL BE RESPONSIBLE FOR BUILDING THIS PROJECT IN ACCORDANCE WITH THE DRAWINGS AND SPECIFICATIONS UNLESS A WRITTEN NOTIFICATION FROM THE OWNER OR ARCHITECT TO THE CONTRARY IS RECEIVED.
4. GENERAL CONTRACTOR SHALL FIELD VERIFY SURVEY LOCATION AND ALL EXISTING CONDITIONS AND DIMENSIONS PRIOR TO CONSTRUCTION. ANY DISCREPANCIES SHALL BE REPORTED TO THE OWNER AND ARCHITECT.
5. WHEN A BEAM OR COLUMN BECOMES PART OF A FIRE RATED WALL OR CEILING IT MUST BE PROTECTED AND BE FIRE RATED AS IS THE WALL OR CEILING.
6. ALL PENETRATIONS THROUGH RATED WALLS SHALL BE SEALED TO MAINTAIN RATING.
7. IDENTIFICATIONS OF RATED PARTITIONS SHALL BE PERMANENTLY INSTALLED ABOVE ANY DECORATIVE CEILING AND/OR IN CONCEALED SPACES. THE LETTERING SHALL BE 2" IN HEIGHT AND SPACED EVERY 12 FT. THE FOLLOWING WORDING IS RECOMMENDED: "2 HOUR FIRE AND SMOKE BARRIER PROTECT ALL OPENINGS".
8. FIRE BARRIES SHALL BE CONTINUOUS FROM OUTSIDE WALL TO OUTSIDE WALL INCLUDING CONCEALED VOIDS, FROM FIRE BARRIER TO FIRE BARRIER, OR A COMBINATION THEREOF, INCLUDING CONTINUITY THROUGH ALL CONCEALED SPACES SUCH AS THOSE FOUND ABOVE CEILING, INCLUDING INTERSTITIAL SPACES. PROVIDE A LISTED JOINT DETAIL FOR TOP OF THE WALL AT THE FLOOR CEILING ASSEMBLY OR ROOF DECK PER NFPA 101 LIFE SAFETY CODE, CHAPTER 8, SECTION 8.2.2.2, 2000 EDITION.
9. FIRE BARRIES ARE TO BE TWO HOUR FIRE RATED CONSTRUCTION THAT EXTENDS FROM THE FLOOR TO THE UNDERSIDE OF THE ROOF OR FIRE DECK WITH ALL OPENING SEALED TIGHT PER NFPA 101 LIFE SAFETY CODE, CHAPTER 8, SECTION 8.2.3.1.1, 2000 EDITION
10. EMERGENCY LIGHTING COMPLYING WITH NFPA 101 LIFE SAFETY CODE, CHAPTER 7, SEC. 7.8, 2000 EDITION, SHALL BE INSTALLED. ADDITIONAL EMERGENCY MAY BE REQUIRED UPON FIELD INSPECTION.
11. EXIT SIGNS COMPLYING WITH NFPA 101 LIFE SAFETY CODE, CHAPTER 7, SEC. 7.10, 2000 EDITION, SHALL BE INSTALLED. ADDITIONAL EXIT SIGNS MAY BE REQUIRED UPON FIELD INSPECTION.
12. EXIT DOORS SHALL NOT BE SUBJECT TO THE USE OF A KEY OR REQUIRE SPECIAL KNOWLEDGE TO OPERATE.
13. PANIC HARDWARE SHALL BE PROVIDED FOR ALL EXIT DOORS PER THE REQUIREMENTS OF NFPA LIFE SAFETY CODE.
14. THE FLOOR ON BOTH SIDES OF A DOOR SHALL BE LEVEL AND HAVE THE SAME ELEVATION ON BOTH SIDES OF THE DOOR FOR A DISTANCE ON EACH SIDE EQUAL TO THE WIDTH OF THE WIDEST SINGLE DOOR.
15. DOORS/HARDWARE HANDLES, PULLS, LATCHES, LOCKS, AND OTHER OPERATING DEVICES ON ACCESSIBLE DOORS SHALL HAVE A SHAPE THAT IS EASY TO GRASP WITH ONEHAND AND DOES NOT REQUIRE TIGHT GRASPING, TIGHT PINCHING, OR TWISTING OF THE WRIST TO OPERATE. LEVER-OPERATED MECHANISMS, PUSH-TYPE MECHANISMS, AND U-SHAPED ARE ACCEPTABLE. (GEORGIA ACCESSIBILITY CODE)
16. CONTRACTOR SHALL SECURE ALL FIRE DEPARTMENT PERMITS AND ACCEPTANCE OF INSTALLED LIFE SAFETY SYSTEM(S). FIRE PROTECTION, AND FIRE ALARM PRIOR TO OWNER OCCUPYING THE BUILDING.
17. COMBUSTIBLE INTERIOR FINISH PRODUCTS SHALL BE PROVIDED PER THE REQUIREMENTS OF THE RESPECTIVE OCCUPANCY CHAPTER OF THE NFPA 101 LIFE SAFETY CODE 2000 EDITION, PROVIDE VERIFICATION AT THE TIME OF FINAL INSPECTION THAT THE PRODUCTS COMPLY WITH THE REQUIREMENTS.
18. A SIGN CLEARLY STATING THAT SMOKING IS PROHIBITED SHALL BE CONSPICUOUSLY POSTED WITHIN EACH BUILDING AND AT EACH BUILDING ENTRANCE. ACCEPTABLE SIGNS SHALL DISPLAY EITHER "NO SMOKING" OR THE INTERNATIONAL "NO SMOKING" SYMBOL (CONSISTING OF A PICTORIAL REPRESENTATION OF A BURNING CIGARETTE ENCLOSED IN A RED CIRCLE WITH A RED BAR ACROSS IT.)
19. REPAIR, PATCH, PREP, AND REPAINT WALLS AS NEEDED – MATCH ADJOINING COLORS.
20. CONTRACTOR TO PROVIDE DELIVERY/EXIT ROUTE AND PROPOSED DUMPSTER LOCATION FOR OWNER'S APPROVAL.

DRAWING INDEX

ARCHITECTURAL

A-0.0	SPECIFICATION & COVER PAGE
A-1.1	EXISTING FIRST FLOOR PLAN
A-1.2	PROPOSED FLOOR PLAN
A-1.3	DEMOLITION PLAN
A-1.4	ENTRY PLAN
A-1.5	ROOM FINISH PLAN
A-2.1	STOREFRONT SECTIONS
A-2.2	STOREFRONT DETAILS
A-2.3	MILLWORK DETAILS
A-3.1	DOOR SCHEDULE
A-3.2	WINDOW SCHEDULE

MECHANICAL

M-1.0	MECHANICAL EXISTING FLOOR PLAN
M-1.1	PROPOSED MECHANICAL FLOOR PLAN

ELECTRICAL

E-0.1	ELECTRICAL SCHEDULES, NOTES
E-1.0	EXISTING POWER PLAN
E-1.1	PROPOSED POWER PLAN
E-2.0	EXISTING AND PROPOSED LIGHTING PLAN

FULTON COUNTY

studio ALA
2221 Peachtree Road
Suite D-328
Atlanta, GA 30309
404-477-2024

No. | Drawing Description | Date

Fulton County Juvenile Court
Entrance Security Renovation
395 Pryor Street NW
Atlanta, GA 30312

Designed by GCH
Drawn by GCH
Reviewed by MK
Reviewed by SQ

BID SET – Revised Addendum #2

Drawing #
A-0.0
Date 9-11-12

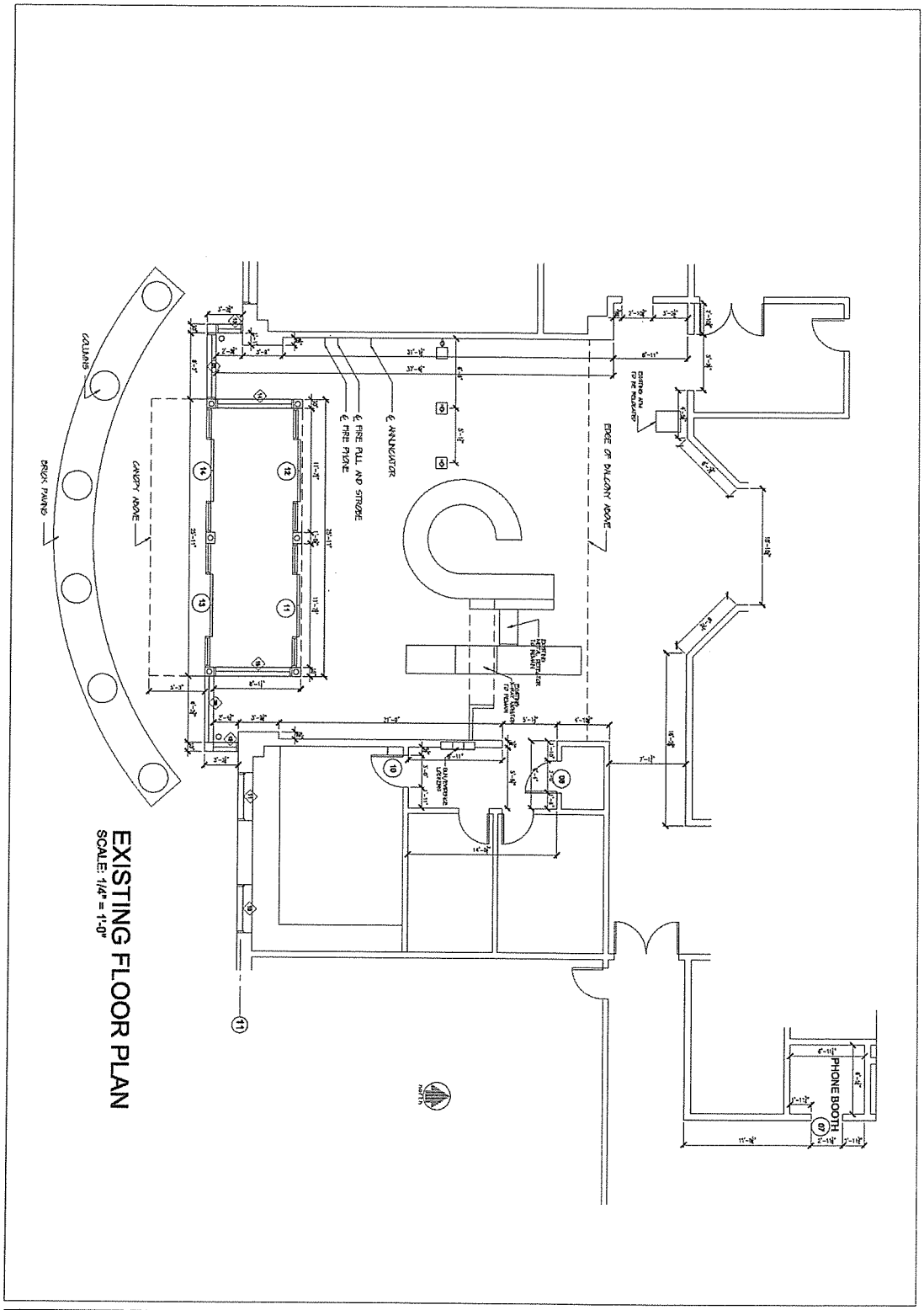
EXISTING FLOOR PLAN
SCALE: 1/4" = 1'-0"
COLUMNS
BRICK PAVING
CANOPY ABOVE
EDGE OF BALCONY ABOVE
PHONE BOOTH
A-1.1
BID SET - Revised Addendum #2
Fulton County Juvenile Court
Entrance Security Renovation
185 Pryor Street NW
Atlanta, GA 30312
studio ALA
FULTON COUNTY

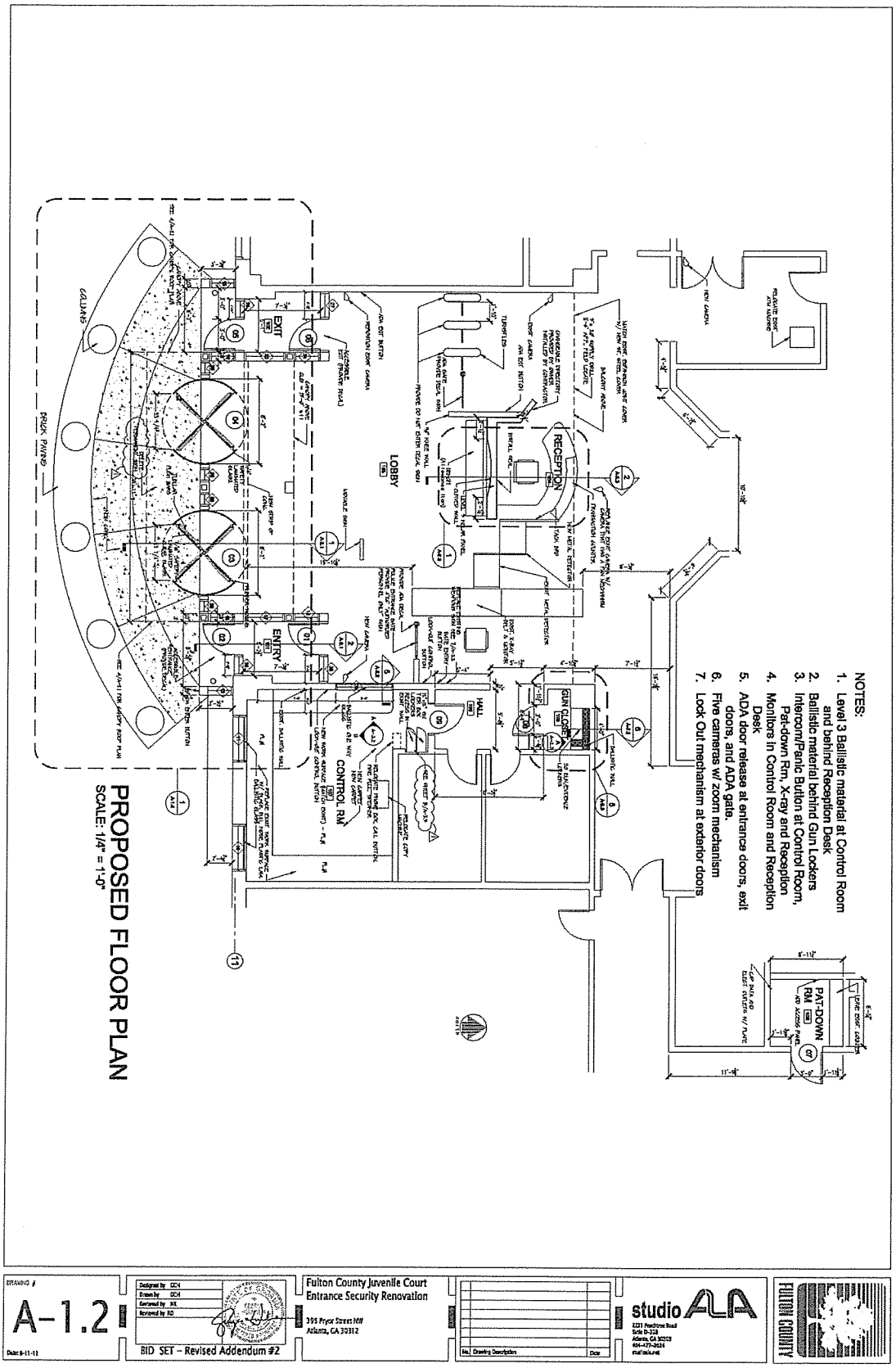
NOTES:
1. Level 3 Ballistic material at Control Room and behind Reception Desk
2. Ballistic material behind Gun Lockers
3. Intercom/Panic Button at Control Room, Pat-down Rm, X-ray and Reception
4. Monitors in Control Room and Reception Desk
5. ADA door release at entrance doors, exit doors, and ADA gate.
6. Five cameras w/ zoom mechanism
7. Lock Out mechanism at exterior doors
PROPOSED FLOOR PLAN
SCALE: 1/4" = 1'-0"
A-1.2
BID SET – Revised Addendum #2
Fulton County Juvenile Court
Entrance Security Renovation
395 Pryor Street NW
Atlanta, GA 30312
studio ALA
FULTON COUNTY

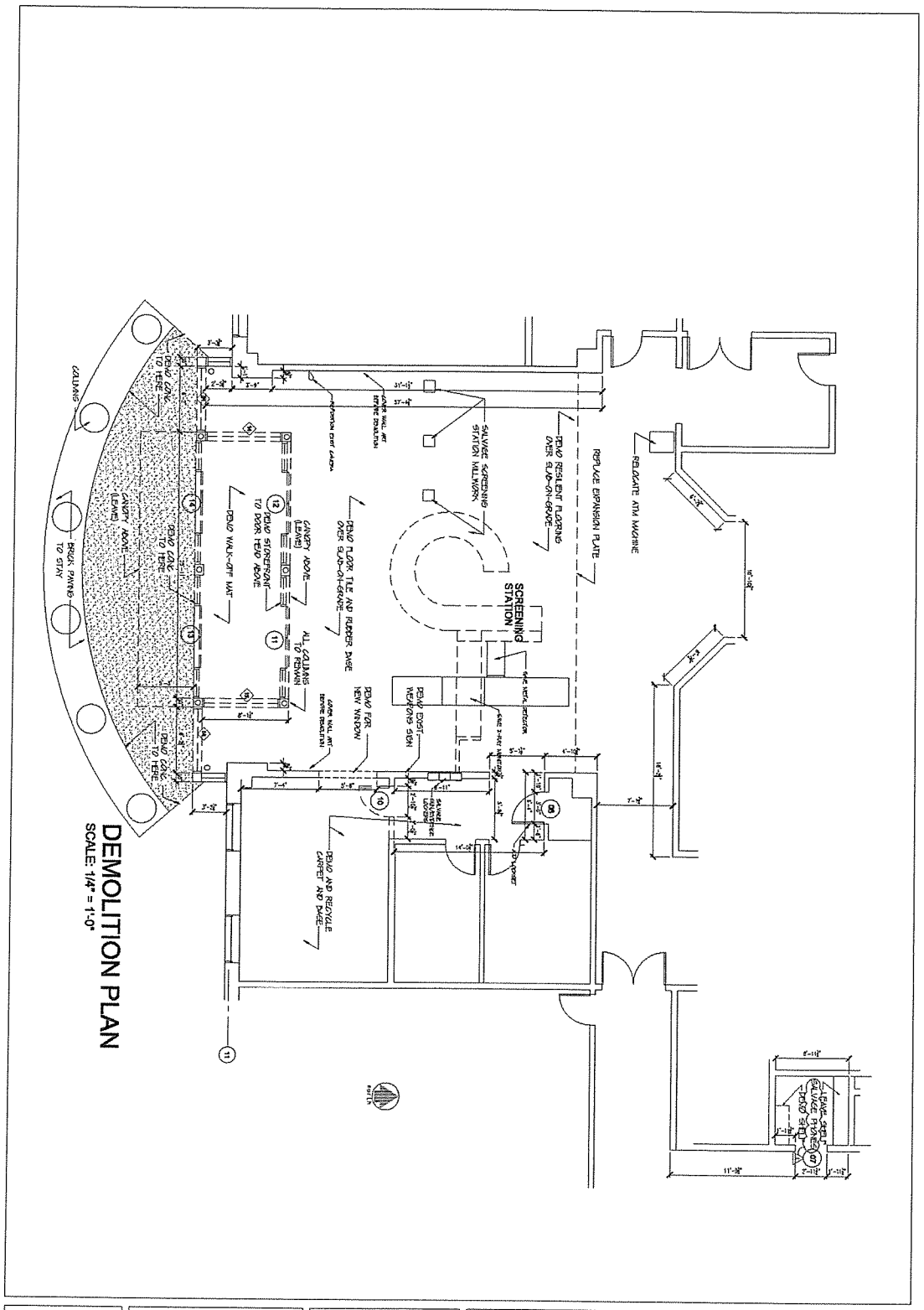
DEMOLITION PLAN
SCALE: 1/4" = 1'-0"
SCREENING STATION
DEMO RESILIENT FLOORING OVER SLAB-ON-GRADE
REPLACE EXPANSION PLATE
RELOCATE ATM MACHINE
SALVAGE SCREENING STATION MILLWORK
DEMO FLOOR TILE AND RUBBER BASE OVER SLAB-ON-GRADE
DEMO WALK-OFF MAT
DEMO STOREFRONT TO DOOR HEAD ABOVE
CANOPY ABOVE (LEAVE)
ALL COLUMNS TO REMAIN
DEMO FOR NEW WINDOW
DEMO EXIST. WEAPONS SIGN
DEMO AND RECYCLE CARPET AND BASE
COLUMNS
BRICK PAVING TO STAY
A-1.3
BID SET – Revised Addendum #2
Fulton County Juvenile Court
Entrance Security Renovation
395 Pryor Street NW
Atlanta, GA 30312
studio ALA
FULTON COUNTY

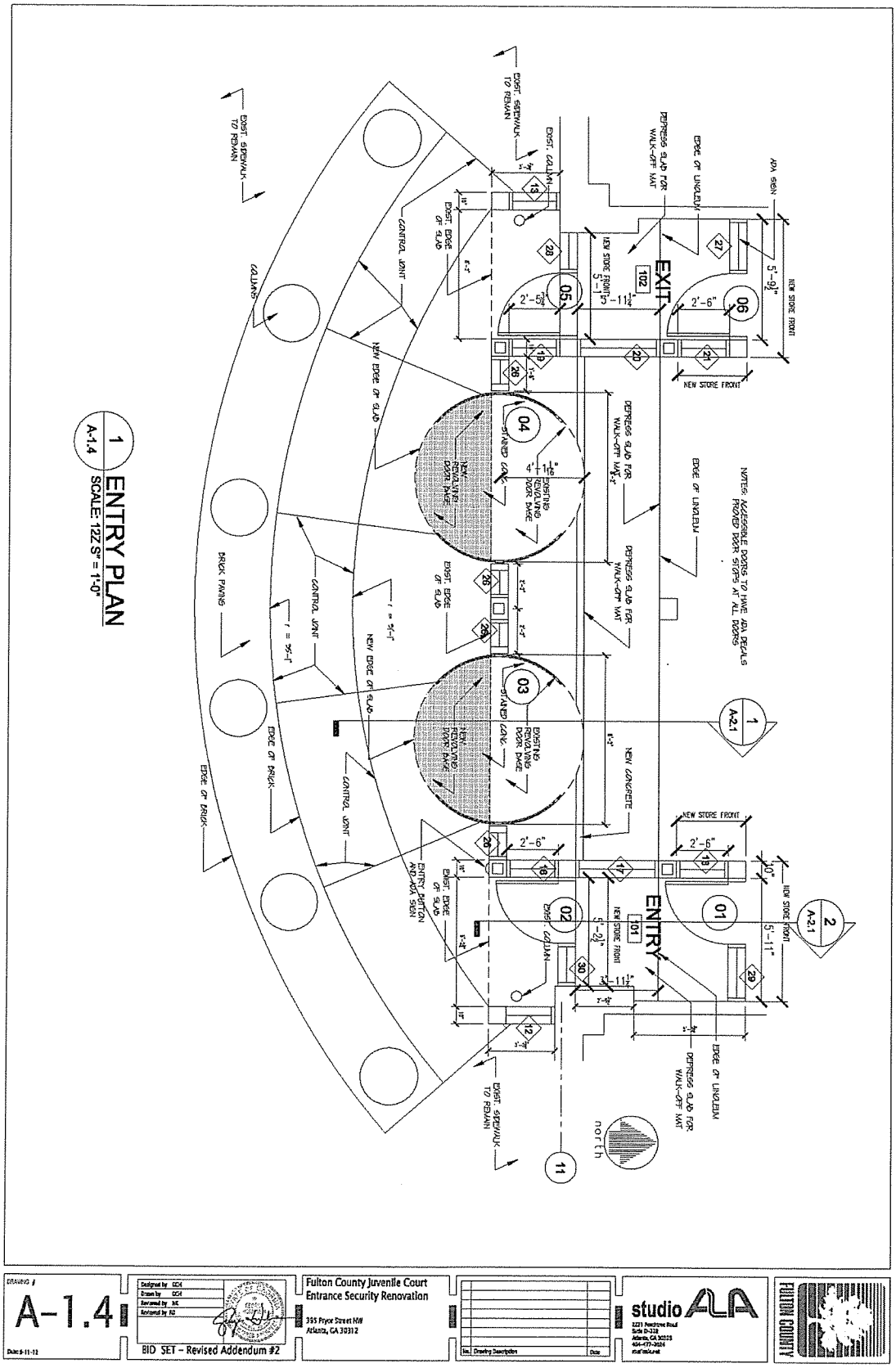

DRAWING # A-1.4	BID SET – Revised Addendum #2	Fulton County Juvenile Court Entrance Security Renovation, 395 Pryor Street NW, Atlanta, GA 30312	studio ALA	FULTON COUNTY

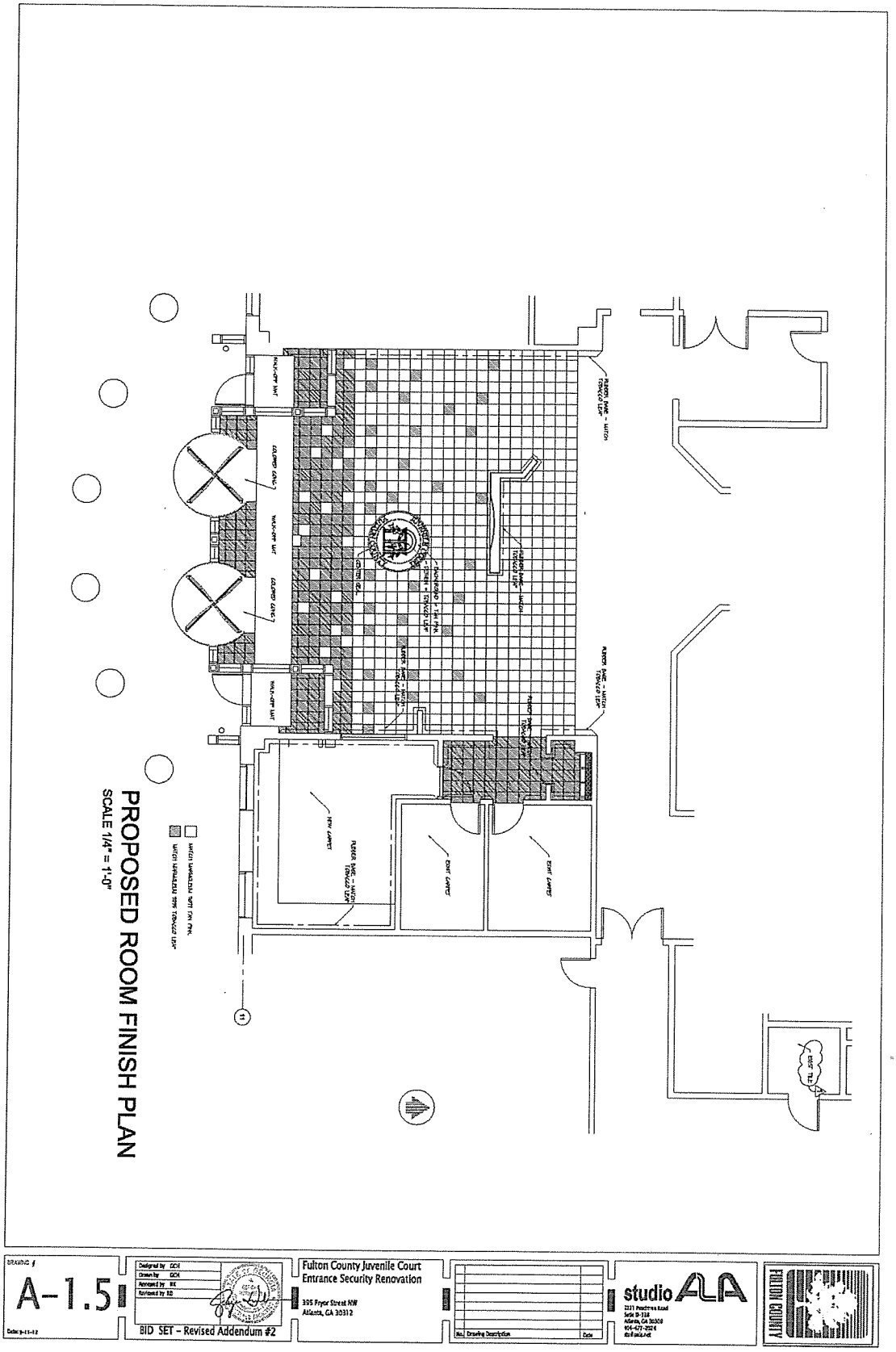
PROPOSED ROOM FINISH PLAN
SCALE 1/4" = 1'-0"
A-1.5
BID SET - Revised Addendum #2
Fulton County Juvenile Court
Entrance Security Renovation
395 Pryor Street NW
Atlanta, GA 30312
studio ALA
FULTON COUNTY

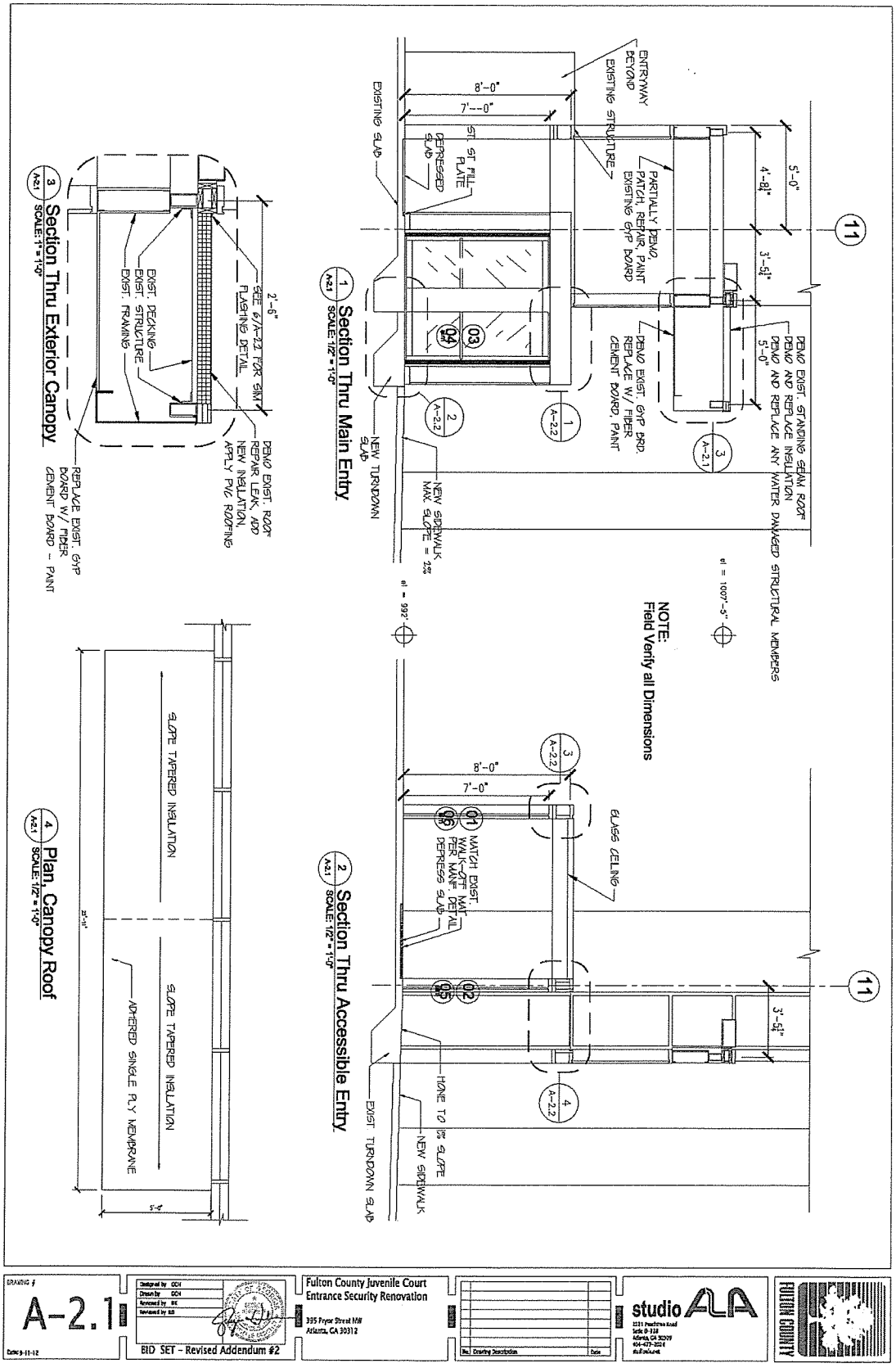
NOTE:
Field Verify all Dimensions
Section Thru Main Entry
SCALE: 1/2" = 1'-0"
Section Thru Accessible Entry
SCALE: 1/2" = 1'-0"
Section Thru Exterior Canopy
SCALE: 1" = 1'-0"
Plan, Canopy Roof
SCALE: 1/2" = 1'-0"
DEMO EXIST. STANDING SEAM ROOF
DEMO AND REPLACE INSULATION
DEMO AND REPLACE ANY WATER DAMAGED STRUCTURAL MEMBERS
PARTIALLY DEMO, PATCH, REPAIR, PAINT EXISTING GYP BOARD
DEMO EXIST. GYP BRD. REPLACE W/ FIBER CEMENT BOARD, PAINT
ENTRYWAY BEYOND
EXISTING STRUCTURE
EXISTING SLAB
ST. ST. FILL PLATE
DEPRESSED SLAB
NEW SIDEWALK MAX. SLOPE = 2%
NEW TURNDOWN SLAB
el = 992'-0"
el = 1007'-5"
GLASS CEILING
MATCH EXIST. WALL OFF MAT PER MANF. DETAIL
DEPRESS SLAB
HOME TO BE SLOPE
EXIST TURNDOWN SLAB
SEE 6/A-2.2 FOR SIM. FLASHING DETAIL
EXIST. DECKING
EXIST. STRUCTURE
EXIST. FRAMING
DEMO EXIST. ROOF REPAIR LEAK, ADD NEW INSULATION, APPLY PVC ROOFING
REPLACE EXIST. GYP BOARD W/ FIBER CEMENT BOARD -- PAINT
SLOPE TAPERED INSULATION
SLOPE TAPERED INSULATION
ADHERED SINGLE PLY MEMBRANE
A-2.1
BID SET - Revised Addendum #2
Fulton County Juvenile Court
Entrance Security Renovation
395 Pryor Street NW
Atlanta, GA 30312
studio ALA
FULTON COUNTY

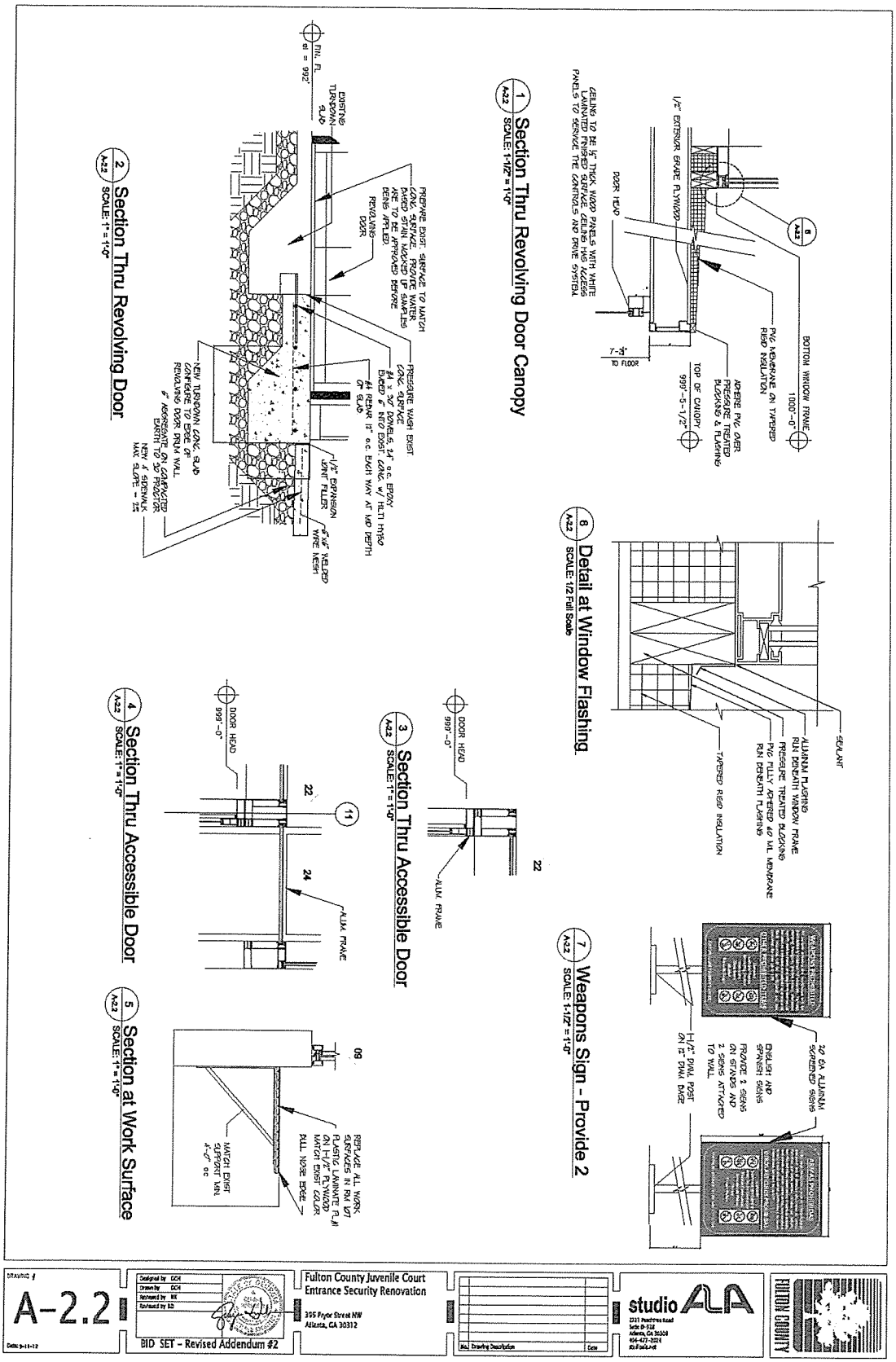
1 A2.2 Section Thru Revolving Door Canopy
SCALE: 1-1/2" = 1'-0"
2 A2.2 Section Thru Revolving Door
SCALE: 1" = 1'-0"
8 A2.2 Detail at Window Flashing
SCALE: 1/2 Full Scale
7 A2.2 Weapons Sign - Provide 2
SCALE: 1-1/2" = 1'-0"
3 A2.2 Section Thru Accessible Door
SCALE: 1" = 1'-0"
4 A2.2 Section Thru Accessible Door
SCALE: 1" = 1'-0"
5 A2.2 Section at Work Surface
SCALE: 1" = 1'-0"
A-2.2
BID SET - Revised Addendum #2
Fulton County Juvenile Court
Entrance Security Renovation
395 Pryor Street NW
Atlanta, GA 30312
studio AIA
FULTON COUNTY

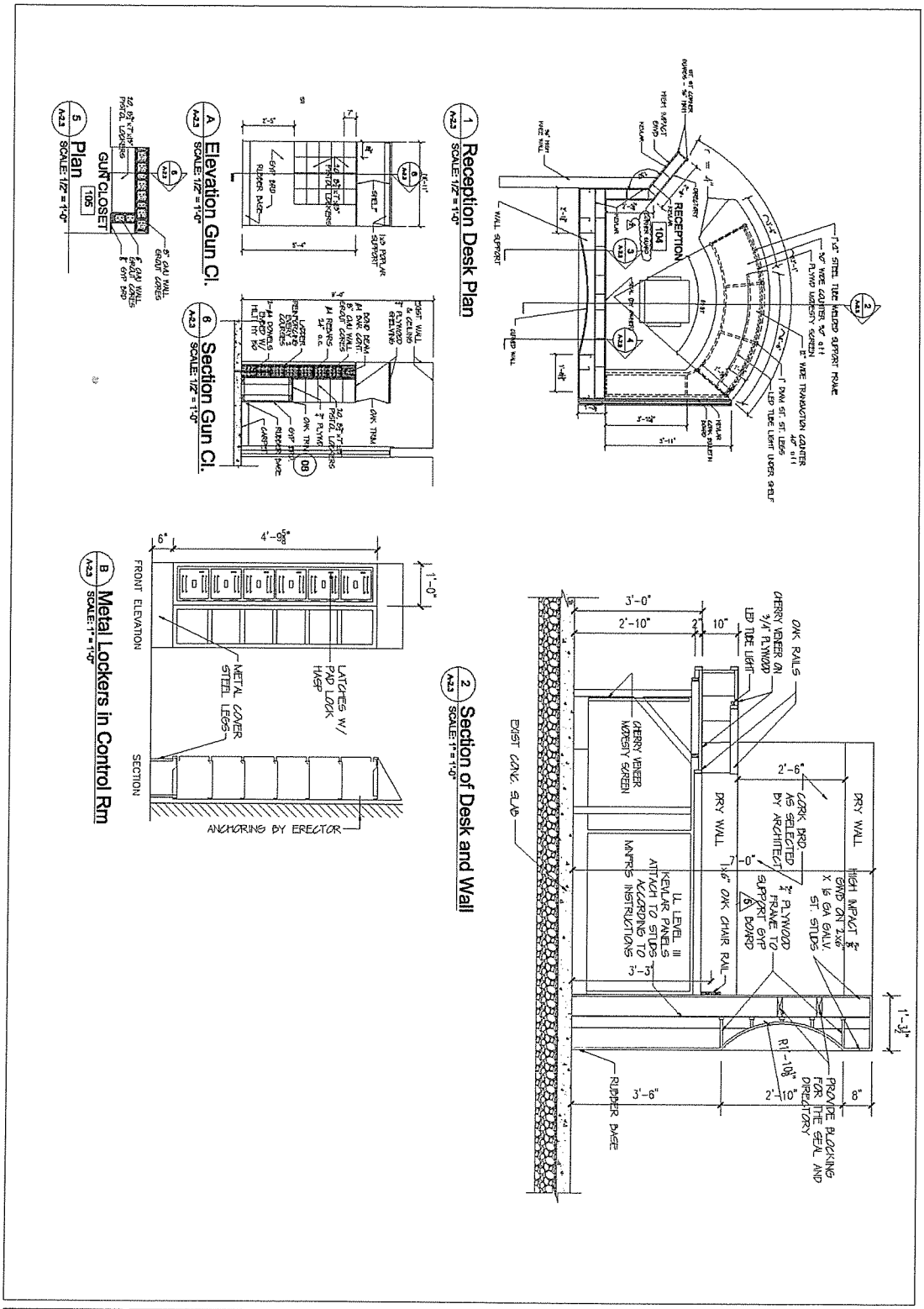
1 Reception Desk Plan
SCALE: 1/2" = 1'-0"
A Elevation Gun Cl.
SCALE: 1/2" = 1'-0"
6 Section Gun Cl.
SCALE: 1/2" = 1'-0"
5 Plan
SCALE: 1/2" = 1'-0"
GUN CLOSET
105
RECEPTION
104
2 Section of Desk and Wall
SCALE: 1" = 1'-0"
B Metal Lockers in Control Rm
SCALE: 1" = 1'-0"
FRONT ELEVATION
SECTION
METAL COVER STEEL LEGS
LATCHES W/ PAD LOCK HASP
ANCHORING BY ERECTOR
EXIST CONC. SLAB
CHERRY VENEER MOTESTY SCREEN
DRY WALL
OAK RAILS
CHERRY VENEER ON 3/4" PLYWOOD
LED TUBE LIGHT
CORK BRD. AS SELECTED BY ARCHITECT
UL LEVEL III KEVLAR PANELS ATTACH TO STUDS ACCORDING TO MNFR'S INSTRUCTIONS
OAK CHAIR RAIL
HIGH IMPACT GWB ON 2x6 X 16 GA GALV. ST. STUDS
PLYWOOD FRAME TO SUPPORT GYP BOARD
RUBBER BASE
PROVIDE BLOCKING FOR THE SEAL AND DIRECTORY
A-2.3
BID SET – Revised Addendum #2
Fulton County Juvenile Court
Entrance Security Renovation
395 Pryor Street NW
Atlanta, GA 30312
studio ALA
FULTON COUNTY

Juvenile Justice Center Renovation - Room Finish Schedule

ROOM	#	FLOOR MATL.	WALLS N - MATL.	WALLS N - FINISH	WALLS S - COLOR	WALLS S - MATL.	WALLS S - FINISH	WALLS E - COLOR	WALLS E - MATL.	WALLS E - FINISH	WALLS W - COLOR	WALLS W - MATL.	WALLS W - FINISH	CEILING MATL.	CEILING COLOR	CEILING FINISH	HEIGHT	NOTES
																		P1-3=MATCH EXIST. P-1=TOUCH UP, P-2=REPAINT
							FIRST FLOOR											
ENTRY	101	CONC	LINOLEUM	STR FRNT	-	-	STR FRNT	-	GYP BRD	P-1	P-1	GYP BRD	P-1	-	-	-	8'-0"	
LOBBY	102	CONC	LINOLEUM	STR FRNT	-	-	STR FRNT	-	GYP BRD	P-1	P-1	GYP BRD	P-1	GLASS	-	-	8'-0"	
RECEPTION	104	CONC	LINOLEUM	-	-	-	STR FRNT	-	GYP BRD	P-1	P-1	GYP BRD	P-1	-	-	-	DTS	TOUCH UP PAINT - MATCH EXIST COLOR
GUN CLOSET	105	CONC	LINOLEUM	-	-	-	STR FRNT	-	-	-	-	-	-	-	-	-	DTS	PAINT S. WALL
HALL	106	CONC	CARPET	GYP BRD	P-1	P-1	GYP BRD	P-1	GYP BRD	P-1	P-1	GYP BRD	P-1	ACT	P-1	EXIST.	8'-0"	EXIST. CARPET - TOUCH-UP WALLS
CONTROL ROOM	107	CONC	CARPET	GYP BRD	P-1	P-1	GYP BRD	P-1	GYP BRD	P-1	P-1	GYP BRD	P-1	ACT	P-1	EXIST.	8'-0"	EXIST. CARPET - TOUCH-UP WALLS
PAT-DOWN RM.	108	CONC	CARPET	GYP BRD	P-1	P-1	GYP BRD	P-1	GYP BRD	P-1	P-1	GYP BRD	P-1	ACT	P-2	EXIST.	8'-0"	NEW CARPET - TOUCH-UP WALLS
																		EXIST. CARPET - PATCH AND PAINT WALLS

Juvenile Justice Center Renovation - Door Schedule

ROOM	DR #	DOOR WIDTH	DOOR HEIGHT	DOOR THICK.	DOOR MATL.	DOOR FINISH	DOOR TYPE	FRAME MATL.	FRAME HEAD	FRAME JAMB	FRAME SILL	FRAME TYPE	FRAME FINISH	HARDWARE LABEL	HARDWARE	NOTES
																FIELD VERIFY ALL DIMENTIONS
ENTRY - INTERIOR	01	3'-0"	7'-0"	1-3/4"	ALUM	ANOD	1	ALUM	C	C	D	C	ANOD			DOOR TO HAVE ACCESSIBLE ENTRY BUTTON
ENTRY - EXTERIOR	02	3'-0"	7'-0"	1-3/4"	ALUM	ANOD	1	ALUM	C	C	D	C	ANOD			DOOR TO HAVE REMOTE ACTIVATED LOCK OUT MECHANISM AND ACCESSIBLE ENTRY BUTTON
REVOLVING DOOR	03	4'-0"	7'-0"	1-3/4"	ALUM	MEDIUM BRONZE	2	ALUM	-	-	E	-	ANOD			BASIS OF DESIGN - BESAM RD-RM-8 W/ REMOTE ACTIVATED LOCK-OUT MECHANISM-EXTER. FRAME, KYMAR
REVOLVING DOOR	04	4'-0"	7'-0"	1-3/4"	ALUM	MEDIUM BRONZE	2	ALUM	-	-	E	-	ANOD			BASIS OF DESIGN - BESAM RD-RM-8 W/ REMOTE ACTIVATED LOCK-OUT MECHANISM-EXTER. FRAME, KYMAR
EXIT - EXTERIOR	05	3'-0"	7'-0"	1-3/4"	ALUM	ANOD	1	ALUM	C	C	E	D	ANOD			BASIS OF DESIGN - BESAM RD-RM-8 W/ REMOTE ACTIVATED LOCK-OUT MECHANISM-EXTER. FRAME, KYMAR
EXIT - INTERIOR	06	3'-0"	7'-0"	1-3/4"	ALUM	ANOD	1	ALUM	C	C	D	F	ANOD			DOOR TO HAVE REMOTE ACTIVATED LOCK OUT MECHANISM AND ACCESSIBLE EXIT BUTTON
PAT-DOWN ROOM	07	3'-0"	7'-0"	1-3/4"	VD	PT-3	4	ST	A	A	-	A	PT-4	B		DOOR TO HAVE ACCESSIBLE EXIT BUTTON
GUN CLOSET	08	3'-0"	7'-0"	1-3/4"	ALUM	PT-3	3	ST	B	B	-	A	PT-4	B		ADD LOCK, STYLE LOCKABLE, OBSERVATION PORT HOLE AND INTERIOR THUMB LOCK
CONTROL ROOM	09	3'-0"	7'-0"	1-3/4"	VD	PT-4	5	ST	B	B	-	B	PT-4	B		BALLISTIC DOOR - LOCK SET IN FRAME
CONTROL ROOM	10	DEMOLISH EXIST. DOOR						DEMOLISH EXIST. FRAME								
EXISTING ENTRY	11	DEMOLISH EXIST. DOOR						DEMOLISH EXIST. FRAME								
EXISTING ENTRY	12	DEMOLISH EXIST. DOOR						DEMOLISH EXIST. FRAME								
EXISTING ENTRY	13	DEMOLISH EXIST. DOOR						DEMOLISH EXIST. FRAME								
EXISTING ENTRY	14	DEMOLISH EXIST. DOOR						DEMOLISH EXIST. FRAME								

DRAWING # A-3.1

Designed by: GCH
Drawn by: GCH
Reviewed by: MC
Reviewed by: RM

BID SET - Revised Addendum #2

Fulton County Juvenile Court
Entrance Security Renovation
395 Pryor Street NW
Atlanta, GA 30312

studio ALA

FULTON COUNTY

Juvenile Justice Center Renovation - Window Schedule

ROOM	#	TYPE	WINDOW WIDTH	WINDOW HEIGHT	WINDOW EXISTING	WINDOW DEMOLISH	WINDOW SAVE	WINDOW NEW	WINDOW TEMPERED	FRAME MATL	FRAME HEAD	FRAME JAMB	FRAME SILL	FRAME TYPE	FRAME FINISH	FRAME LABEL	NOTES
																	FIELD VERIFY ALL DIMENSIONS
ENTRY	07	-	5'-11"	4'-7"	YES	NO	YES	-	NO	ALUM	A	A	A	AMOD	-	-	
ENTRY	08	-	5'-11"	7'-10"	YES	YES	REPLACE	YES	YES	ALUM	A	A	A	AMOD	-	-	
ENTRY	12	A	2'-2"	7'-10"	YES	YES	NO	-	-	ALUM	A	A	A	AMOD	-	-	REPLACE EXIST. WINDOW 123 WITH NEW 12
ENTRY	14	-	7'-3"	7'-10"	NO	-	-	YES	YES	ALUM	A	A	A	AMOD	-	-	
ENTRY	16	B	2'-0"	7'-10"	NO	-	-	YES	YES	ALUM	A	A	A	AMOD	-	-	
ENTRY	17	C	3'-8"	7'-10"	NO	-	-	YES	YES	ALUM	A	A	A	AMOD	-	-	
ENTRY	18	B	2'-2"	7'-10"	NO	-	-	YES	YES	ALUM	A	A	A	AMOD	-	-	
ENTRY	22	L	5'-7"	7'-1"	NO	-	-	YES	YES	ALUM	A	A	A	AMOD	-	-	
ENTRY	24	N	5'-11"	2'-0"	NO	-	-	YES	YES	ALUM	A	A	A	AMOD	-	-	
ENTRY	25	H	2'-5"	7'-10"	NO	-	-	YES	YES	ALUM	A	A	A	AMOD	-	-	
ENTRY	30	J	1'-8"	7'-10"	NO	-	-	YES	YES	ALUM	A	A	A	AMOD	-	-	
REVOLVING DOOR LITE	04	D	5'-7"	4'-7"	YES	NO	NO	YES	NO	ALUM	A	A	A	AMOD	-	-	
REVOLVING DOOR LITE	05	D	5'-7"	4'-7"	YES	NO	NO	YES	NO	ALUM	A	A	A	AMOD	-	-	
REVOLVING DOOR LITE	06	D	5'-7"	4'-7"	YES	NO	NO	YES	NO	ALUM	A	A	A	AMOD	-	-	
REVOLVING DOOR LITES	26	E	1'-2"	7'-10"	NO	-	-	YES	YES	ALUM	A	A	A	AMOD	-	-	
EXIT	01	-	5'-11"	7'-10"	YES	NO	YES	-	NO	ALUM	A	A	A	AMOD	-	-	
EXIT	02	-	2'-2"	7'-10"	YES	YES	REPLACE	YES	YES	ALUM	A	A	A	AMOD	-	-	
EXIT	13	A	2'-2"	7'-10"	YES	NO	NO	-	-	ALUM	A	A	A	AMOD	-	-	REPLACE EXIST. WINDOW 13 WITH NEW 13
EXIT	15	-	7'-3"	7'-10"	YES	-	-	YES	YES	ALUM	A	A	A	AMOD	-	-	
EXIT	19	B	2'-0"	7'-10"	NO	-	-	YES	YES	ALUM	A	A	A	AMOD	-	-	
EXIT	20	C	3'-8"	7'-10"	NO	-	-	YES	YES	ALUM	A	A	A	AMOD	-	-	
EXIT	21	B	2'-2"	7'-10"	NO	-	-	YES	YES	ALUM	A	A	A	AMOD	-	-	
EXIT	23	K	5'-7"	7'-1"	NO	-	-	YES	YES	ALUM	A	A	A	AMOD	-	-	
EXIT	27	F	2'-10"	7'-10"	NO	-	-	YES	YES	ALUM	A	A	A	AMOD	-	-	
EXIT	28	G	1'-7"	7'-10"	NO	-	-	YES	YES	ALUM	A	A	A	AMOD	-	-	
CONTROL ROOM	09	D	2'-8"	5'-0"	NO	-	-	YES	BALLISTIC	ST	B	B	B	PT-3	B	-	NEW BALLISTIC WINDOW WITH MIRROR SURFACE
CONTROL ROOM	10	P	4'-2"	5'-0"	YES	NO	YES	YES	BALLISTIC	ST	C	C	C	PT-3	B	-	ADD BALLISTIC WINDOW WITHIN EXISTING OPENING
CONTROL ROOM	11	P	4'-2"	5'-0"	YES	NO	YES	YES	BALLISTIC	ST	C	C	C	PT-3	B	-	ADD BALLISTIC WINDOW WITHIN EXISTING OPENING

Lobby Entrance Renovation

EXHIBIT 2

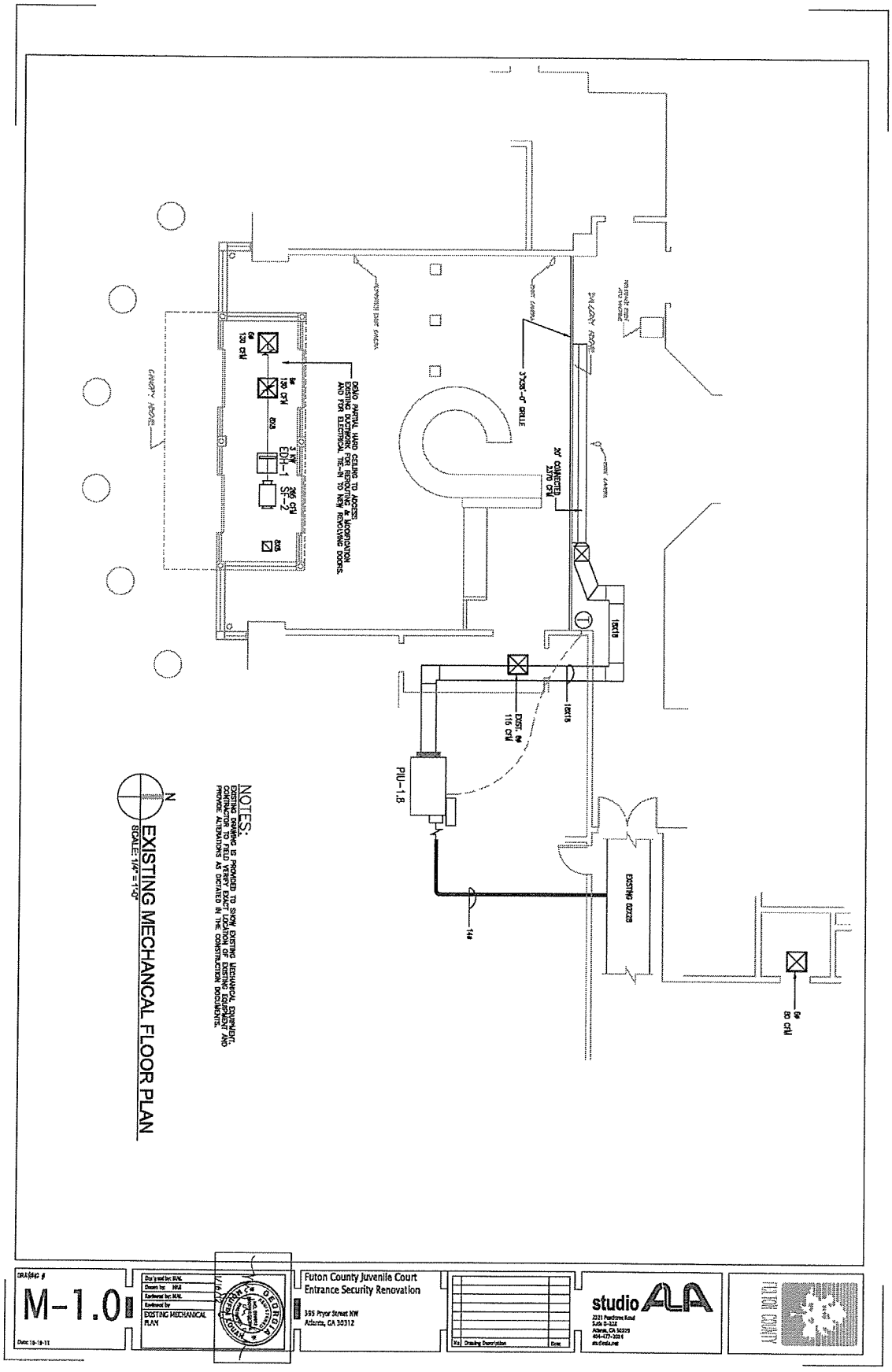

EXHIBIT 2

Lobby Entrance Renovation

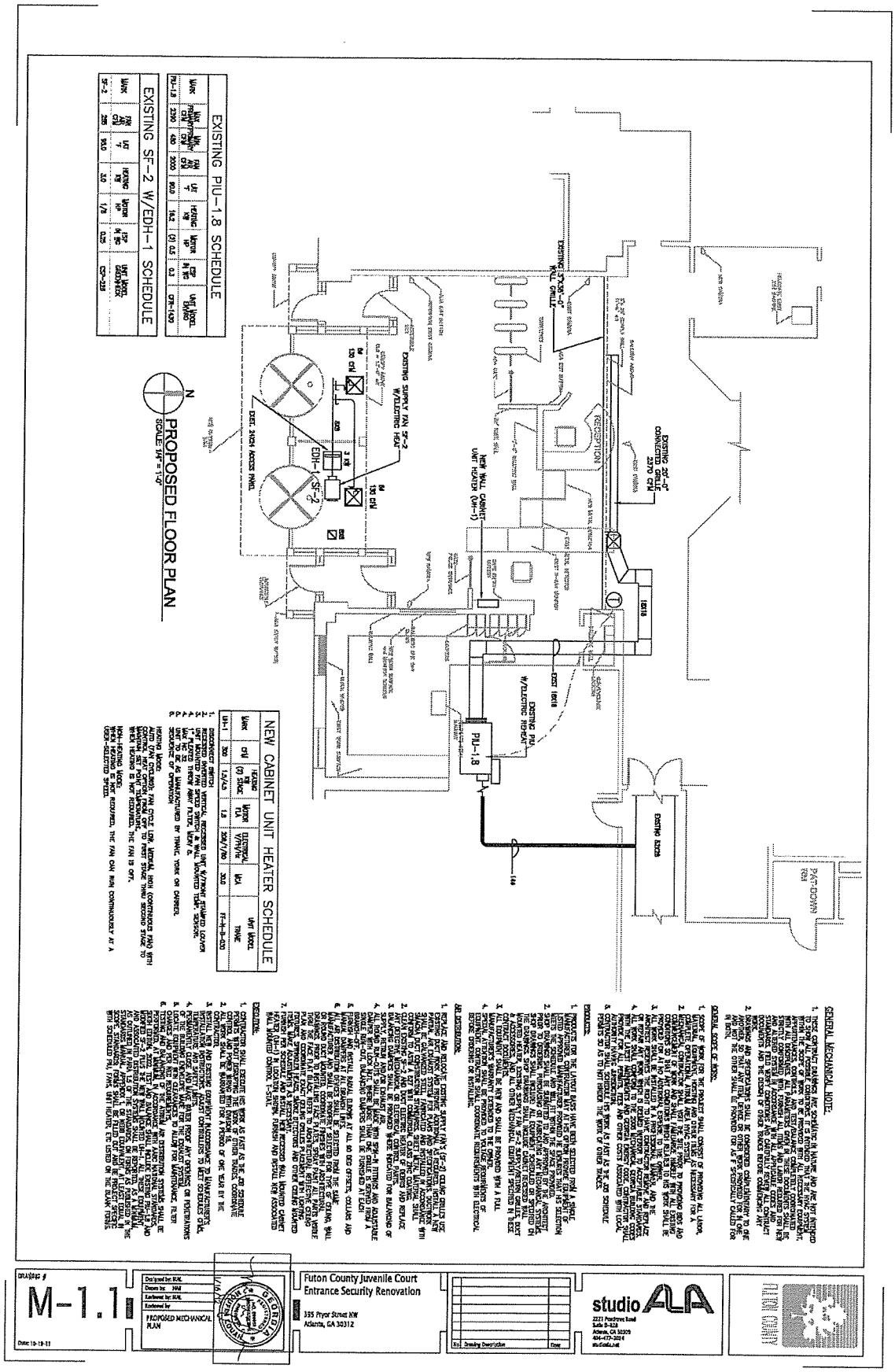

RENOVATION NOTES:

[illegible]

ELECTRICAL NOTES:

[illegible]

LAY-IN FLUORESCENT FIXTURE DETAIL

SCALE: NO SCALE

LIGHTING FIXTURE SCHEDULE

TYPE	FIXTURE DESCRIPTION	MOUNTING	VOLTS	WATTS	LAMPS	MANUFACTURER	REMARKS
[illegible]	[illegible]	[illegible]	[illegible]	[illegible]	[illegible]	[illegible]	
[illegible]	[illegible]	[illegible]	[illegible]	[illegible]	[illegible]	[illegible]	
[illegible]	[illegible]	[illegible]	[illegible]	[illegible]	[illegible]	[illegible]	

NOTES: [illegible]

ELECTRICAL SYMBOL LEGEND:

[illegible]

FULTON COUNTY

studio ALA

Fulton County Juvenile Court
Entrance Security Renovation

E-0.1

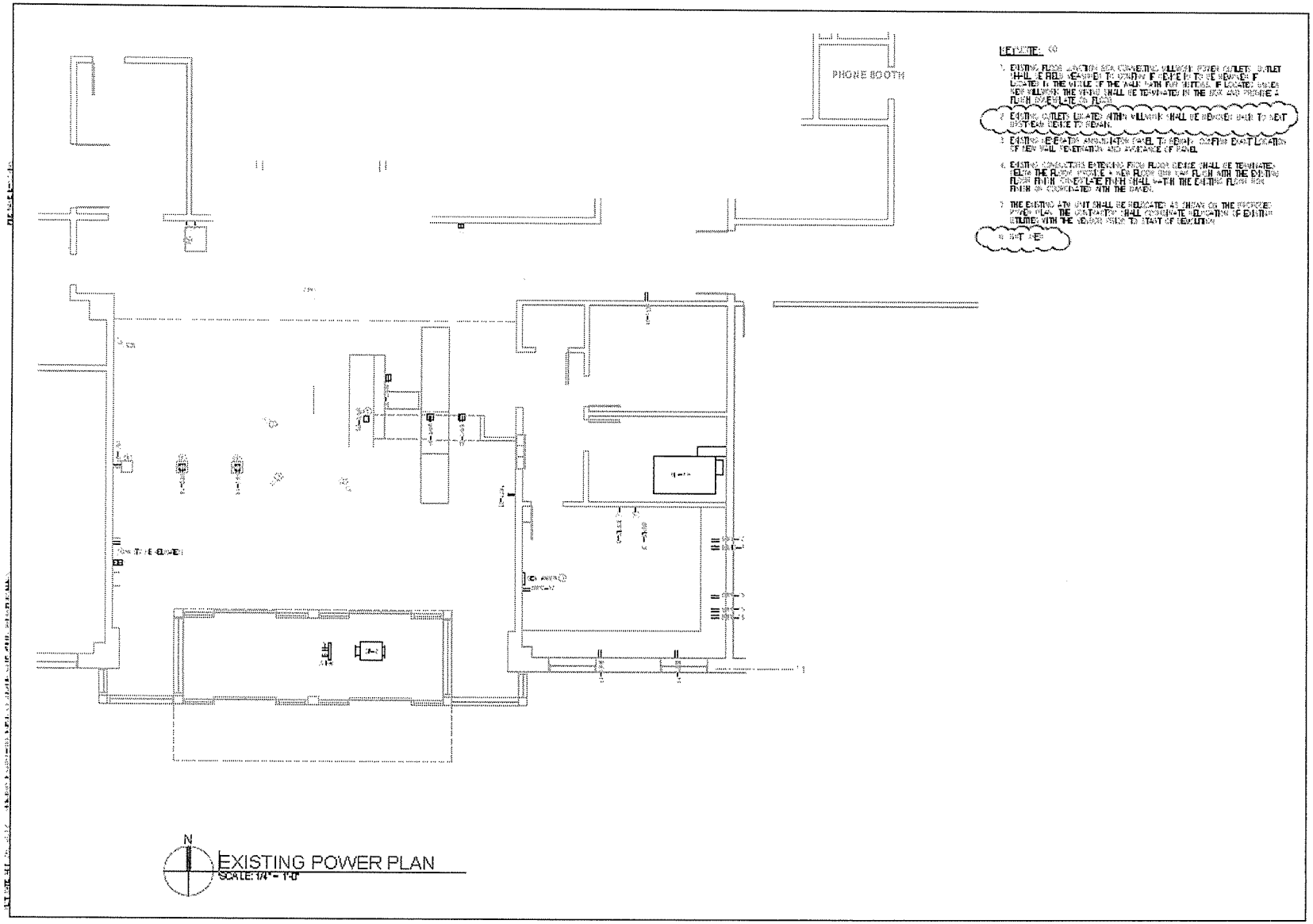
PHONE BOOTH
KEYNOTE:
EXISTING POWER PLAN
SCALE: 1/4" = 1'-0"
FULTON COUNTY
studio AIA
Fulton County Juvenile Court
Entrance Security Renovation
E-1.0

EXHIBIT 2
Mechanical Drawings

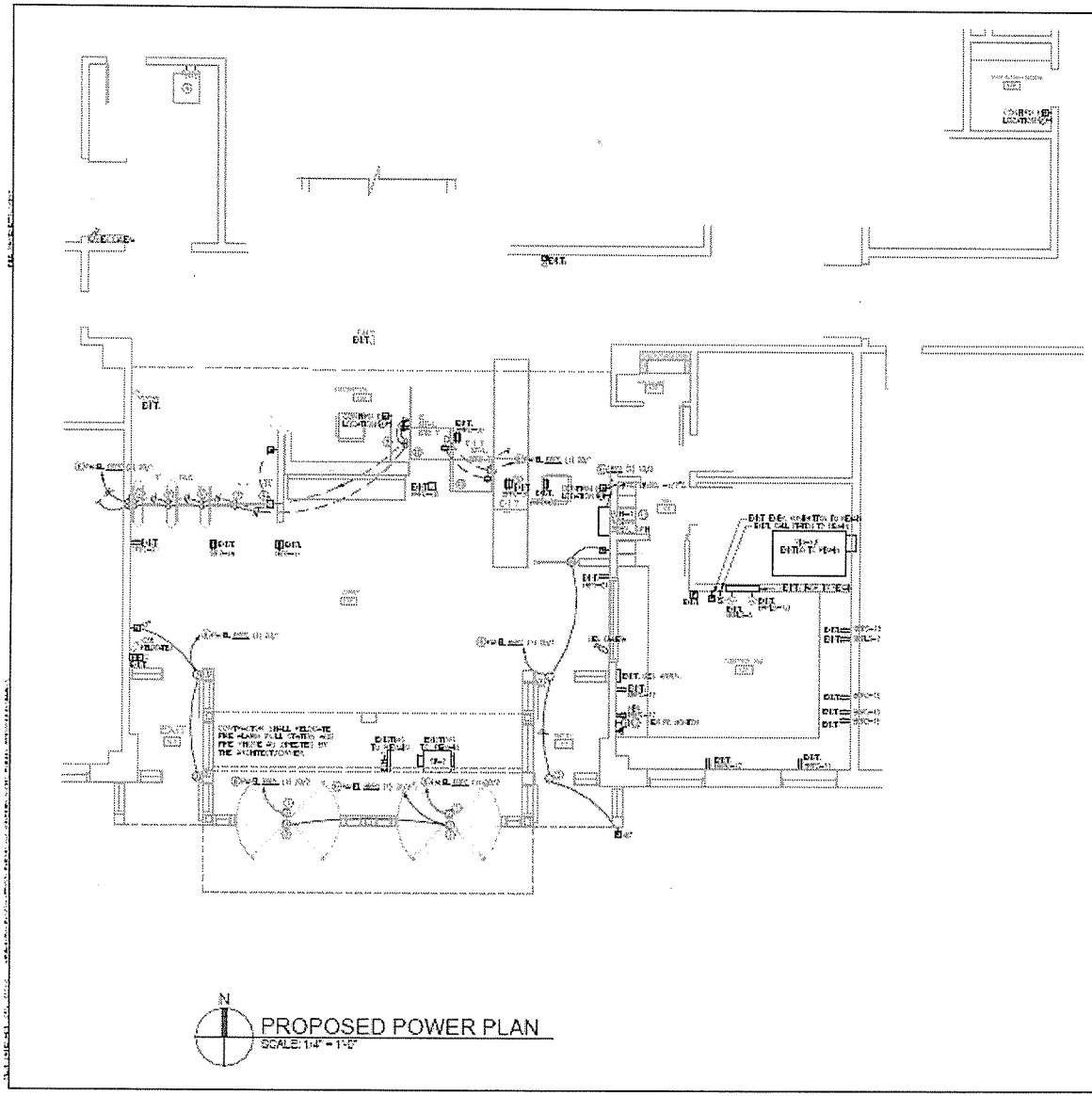

KEYNOTE:

1. PROVIDE A DEDICATED ELECTRICAL CONNECTION TO REVOLVING DOOR OPERATOR. DOOR SHALL REQUIRE A 20A, 208V CIRCUIT CONNECTION TO THE OPERATOR. COORDINATE ELECTRICAL CONNECTION LOCATION AND SPECIFIC REQUIREMENTS OF UNIT WITH THE DOOR VENDOR PRIOR TO ROUGH-IN. ALL RACEWAYS AND CONDUCTORS SHALL BE ROUTED CONCEALED WITHIN THE DOOR FRAME OR WALL CAVITY.
2. PROVIDE A 20A, 120V ELECTRICAL CONNECTION FOR THE REVOLVING DOOR AUTOMATION. COORDINATE ELECTRICAL CONNECTION LOCATION AND SPECIFIC REQUIREMENTS OF UNIT WITH THE DOOR VENDOR PRIOR TO ROUGH-IN.
3. PROVIDE ELECTRICAL CONNECTION AND INTERLOCK CONTROLS FOR ACCESSIBLE DOOR OPERATOR. POWER CONNECTION SHALL BE MADE TO DOOR OPERATOR IN HEADER.
4. RELOCATE THE EXISTING POWER AND COMMUNICATION CONNECTIONS FOR THE RELOCATED ART UNIT. COORDINATE RELOCATION OF EQUIPMENT UNIT POWER AND TELECOM PRIOR TO START OF DEMO.
5. EXISTING FLOOR BOX SHALL BE REUSED TO POWER OWNER'S EQUIPMENT AS SHOWN. ADDITIONAL CIRCUITING MAY BE REQUIRED AS SPECIFIED.
6. EXTEND CIRCUIT HOMERUNS TO A SPARE CIRCUIT BREAKER WITHIN ELECTRICAL DISTRIBUTION PANEL AS SHOWN. IF NO SPARE CIRCUIT BREAKERS EXIST, THE CONTRACTOR SHALL PROVIDE A NEW BREAKER COMPATIBLE WITH THE PANEL MANUFACTURER'S SPECIFICATIONS. DETERMINE RATING OF NEW BREAKER SHALL EXCEED THE AVAILABLE FAULT CURRENT OF THE PANEL/BUILDING.
7. PROVIDE RACEWAY STUB-UPS WITHIN BASE OF TURNSTILE UNIT. PROVIDE 4"x2" JUNCTION BOX AND CONDUIT STUB-UP TO ABOVE FINISH FLOOR. FIELD CONFIRM EXACT LOCATION OF STUB-UP WITH EQUIPMENT VENDOR PRIOR TO SLAB CUTTING. PLACEMENT OF THE TURNSTILE LOCATIONS SHALL BE MARKED ON THE EXISTING FLOOR AND CONFIRMED WITH THE OWNER PRIOR TO START OF DEMOLITION.
8. CONTROL FOR ACCESSIBLE GATE OPERATOR. FIELD CONFIRM EXACT TERMINATION LOCATION PRIOR TO START OF WORK.
9. PROVIDE A FLUSH FLOOR POWER AND DATA/TELEPHONE OUTLET TO SERVE MILLWORK AREA. OUTLET BOXES SHALL BE STAGGERED TO BE NO LESS THAN 6" APART WHERE THE MILLWORK CONFIRM EXACT PLACEMENT PRIOR TO DEMOLITION OF THE EXISTING FLOORING.
10. PROVIDE ADA ELECTRICAL AND NETWORKING CONNECTION TO THE NEW METAL DETECTOR UNIT. COORDINATE EXACT CONNECTION LAYOUT WITH THE EQUIPMENT VENDOR OR VENDORS SPECIFICATIONS.
11. PROVIDE ELECTRICAL CONNECTION TO MECHANICAL UNIT. FEEDER SHALL BE ROUTED WITHIN EXISTING WALL CAVITY. COORDINATE ROUTING OF THERMOSTAT RACEWAY WITH MECHANICAL CONTRACTOR. PROVIDE RACEWAY AND TRADE SIZE PER TO THERMOSTAT LOCATION.
12. PROVIDE A MONITOR CABLING CONNECTION AND ELECTRICAL OUTLET FOR CONNECTION TO MONITOR. COORDINATE EXACT MOUNTING HEIGHT AND LOCATION WITH THE ARCHITECT/OWNER PRIOR TO ROUGH-IN. ELECTRICAL OUTLET SHALL BE CONNECTED TO THE EXISTING EMERGENCY POWER CIRCUIT WITHIN ROOM AS INDICATED.

GENERAL NOTES:

1. COORDINATE ELECTRICAL CONNECTION LOCATION AND SPECIFIC REQUIREMENTS OF THE DOOR UNIT WITH THE DOOR VENDOR PRIOR TO ROUGH-IN. ALL RACEWAYS AND CONDUCTOR EXTENDED TO ITEMS BELOW THE CUT-UP SHALL SHALL BE ROUTED CONCEALED WITHIN THE DOOR FRAME OR WALL CAVITY. EXISTING RACEWAYS SHALL BE REUSED AT THE CONTRACTORS DISCRETION.
2. ALL EXTERIOR DOORS SHALL BE PROVIDED WITH "DOOR ALARM" INTERLOCK CONTROL. CONTROL OF DOORS SHALL BE LOCATED AT THE SECURITY DESK OR POLICE DEN. EXTEND ELECTROMAGNETIC HARDWARE AND CONTROL WIRING TO DESIGNATED DOORS LOCATION AND INTERFACE AS SHOWN ON DRAWING.
3. THE CONTRACTOR SHALL COORDINATE THE EXACT SCOPE OF WORK REQUIREMENTS OF THE CCTV, PANIC CALL AND DATA NETWORK REQUIREMENTS WITH THE OWNER.

GENERAL SCOPE OF WORK:

1. SCOPE OF WORK FOR THE PROJECT SHALL CONSIST OF PROVIDING ALL LABOR, MATERIALS, EQUIPMENT, HOISTING AND CONNECTIONS AS NECESSARY FOR A COMPLETE OPERATIONAL ATRIUM AREA ELECTRICAL SYSTEM.
2. CONTRACTOR SHALL VISIT THE SITE PRIOR TO PROVIDING BIDS AND COMMENCEMENT OF WORK AND SHALL FAMILIARIZE HIMSELF WITH ALL EXISTING CONDITIONS SO THAT ANY CONDITIONS WHICH RELATES TO HIS WORK SHALL BE REMEDIED PRIOR AT NO ADDITIONAL EXPENSE TO THE OWNER.
3. ALL WORK SHALL BE INSTALLED IN A PROFESSIONAL MANNER AND THE ARCHITECT RESERVES THE RIGHT TO HAVE CONTRACTOR REMOVE AND REPLACE OR REWORK ANY WORK WHICH IS DEEMED INFERIOR TO ACCEPTABLE STANDARDS.
4. ALL WORK SHALL CONFORM TO THE 2009 NATIONAL ELECTRICAL CODE WITH THE LATEST AMENDMENTS, GEORGIA ENERGY CODE AND NATIONAL FIRE ALARM CODE. CONTRACTOR SHALL PROVIDE FOR ALL PERMITS, FEES AND OTHER COSTS ASSOCIATED WITH LOCAL AUTHORITY HAVING JURISDICTION.
5. CONTRACTOR SHALL SCHEDULE HIS WORK SO AS NOT TO THE JOB SCHEDULE OR DELAY, INTERFERE OR INTERRUPT THE WORK OF OTHER TRADES.
6. ELECTRICAL SUB-CONTRACTOR SHALL COORDINATE ELECTRICAL CONNECTION AND PROTECTION REQUIREMENTS WITH THE OTHER TRADES PRIOR TO CONNECTION OR ENERGIZING OF THE WIRED ELECTRICAL CIRCUIT TO CONFIRM ACCURATELY RATED OVER-CURRENT PROTECTION AND FEEDER AMPACITY SHALL VARIATION EXIST. THE ELECTRICAL SUB-CONTRACTOR SHALL NOTIFY THE ARCHITECT AND/OR GENERAL CONTRACTOR IMMEDIATELY.

FULTON COUNTY

studio ALA

Fulton County Juvenile Court
Entrance Security Renovation

E-1.1
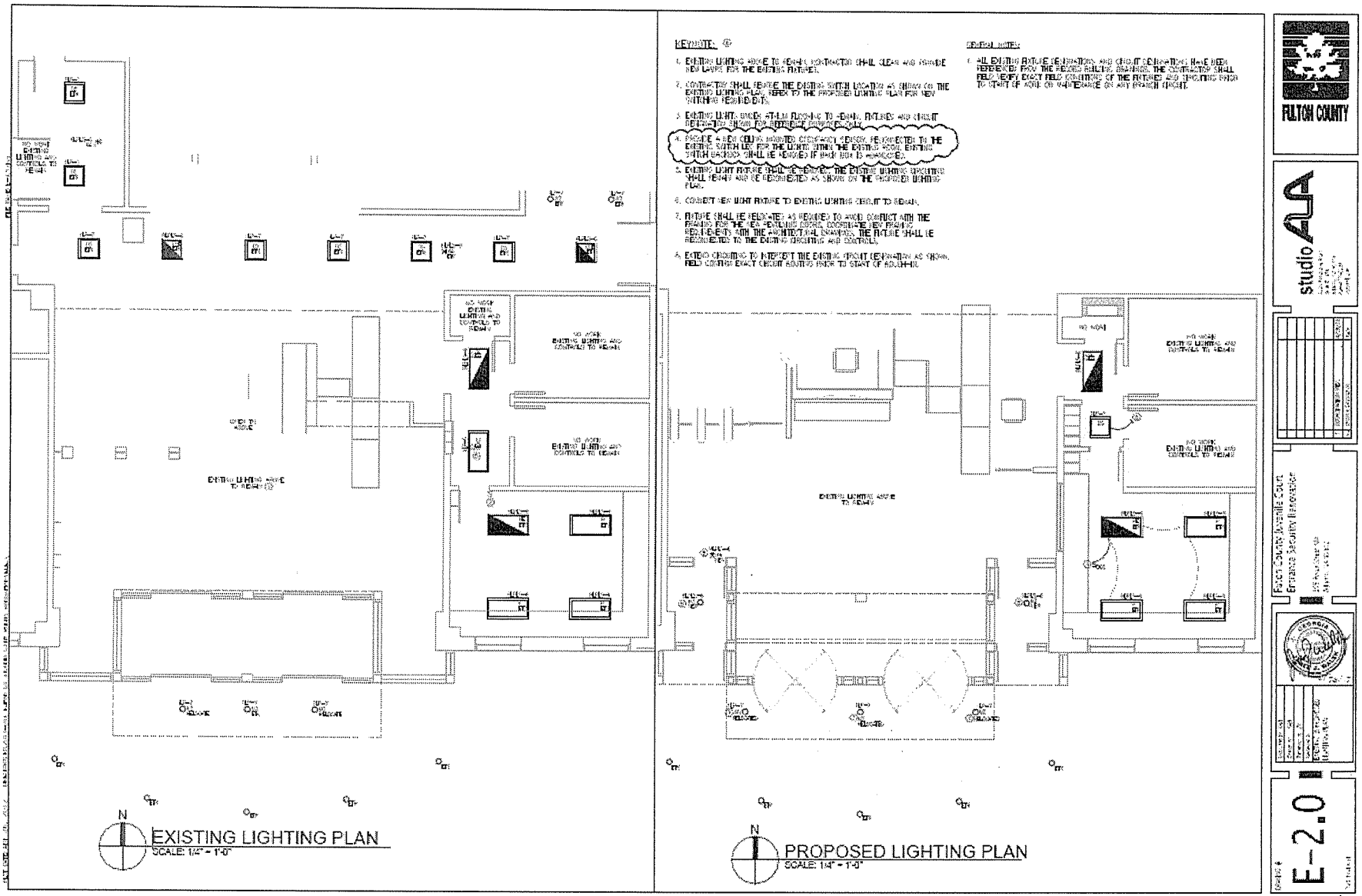
EXHIBIT 2
Mechanical Drawings