FULTON COUNTY

INVITATION TO BID 14ITB0356K-NH

2014 STANDBY MISCELLANEOUS CONSTRUCTION-WATER SYSTEM SERVICES

For

WATER AND SEWER DEPARTMENT

BID DUE DATE AND TIME: March 21, 2014, 11:00 AM
BID ISSUANCE DATE: February 19, 2014
PRE-BID CONFERENCE DATE: March 14, 2014
PURCHASING CONTACT: Nancy Harrison, Assistant Purchasing Agent
nancy.harrison@fultoncountyga.gov

LOCATION: FULTON COUNTY DEPARTMENT OF PURCHASING & CONTRACT COMPLIANCE
130 PEACHTREE STREET, S.W., SUITE 1168
ATLANTA, GA 30303

Invitation to Bid

Owner-Contractor Agreement – Sample Contract

Section 1 - Instructions to Bidders

1. Contract Documents
2. Bid Preparation
3. Receipt and Opening of Bids
4. Addenda and Interpretations
5. Site Examination
6. Bidder's Modification and Withdrawal of Bids
7. Bid and Contract Security
8. Surety Bonds
9. Insurance Requirements
10. Right to Reject Bids
11. Applicable Laws
12. Examination of Contract Documents
13. Bid Evaluation
14. Award Criteria
15. Disqualification of Bidders
16. Basis of Award
17. Professional Licenses
18. Wage Clause
19. Notice of Award of Contract
20. Execution of Contract Documents
21. Equal Employment Opportunity (EEO) in Purchasing and Contract Compliance
22. Joint Venture
23. Contractors Compliance with Procurement
24. Georgia Security and Immigration Compliance Act
25. Subcontracting Opportunities
26. Term of Contract
27. No Contact Provision
28. Authorization to Transact Business
29. Pre-Construction Conference
30. Substitutions
31. Right to Protest
32. Bid General Conditions
33. Submittals

Section 2

Bid Form

Section 3

Bond Forms

Section 4
Scope of Work and Technical Specifications

Section 5
Insurance and Risk Management Provisions

Section 6
Purchasing Forms

Form A - Non-Collusion Affidavit of Prime Bidder
Form B - Certificate of Acceptance of Request for Bid Requirements
Form C - Georgia Professional License Certification *(not applicable*)
Form D – Certification Regarding Debarment
Form E – Disclosure Form and Questionnaire
Form F – Georgia Security and Immigration Contractor Affidavit and Agreement
Form G – Georgia Security and Immigration Subcontractor Affidavit

Section 7
Contract Compliance Requirements

Non-Discrimination in Contracting and Procurement
Required Forms and EBO Plan:
Exhibit A – Promise of Non-Discrimination
Exhibit B – Employment Report
Exhibit C – Schedule of Intended Subcontractor Utilization
Exhibit D – Letter of Intent to Perform As a Subcontractor or Provide Materials or Services
Exhibit E – Declaration Regarding Subcontracting Practices
Exhibit F – Joint Venture Disclosure Affidavit
Exhibit G – Prime Contractor/Subcontractor Utilization Report
Exhibit H – First Source Jobs Program Forms
Equal Business Opportunity Plan (EBO Plan)

Section 8
General Conditions

Section 9
Special Conditions

Section 10
Exhibits

Section 11
Appendices

INVITATION TO BID

14ITB0356K-NH
2014 STANDBY MISCELLANEOUS CONSTRUCTION – WATER SYSTEM SERVICES

Sealed Bids for furnishing all materials, labor, tools, equipment and appurtenances necessary for 2014 Standby Miscellaneous Construction – Water System Services will be received by the Fulton County Department of Purchasing and Contract Compliance at 130 Peachtree Street, S.W. Suite 1168 Atlanta, GA 30303, **no later than 11:00 a.m.**, local time, on **March 21, 2014**.

SCOPE OF WORK
The Project consists of the following major elements: providing all labor, equipment and materials necessary for the construction, installation, and emergency repair of miscellaneous water mains, waste water service lines, and other required improvements to the Water collection system within Fulton County. The work includes providing an emergency water main repair crew on an as needed basisAll work shall be in conformance with the contract documents, drawings and Fulton County Standards and Specifications. Being this is a miscellaneous standby contract; the location of the work will be in various locations throughout Fulton County. The detailed scope of work and technical specifications are outlined in the Division of Work Section 01 10 00, Project Summary and Scope of Work of this bid document.

BID DOCUMENTS
This document and supporting documents can be downloaded at the Fulton County Website, http://www.fultoncountyga.gov under “Bid Opportunities”.

PURCHASING CONTACT
Information regarding the bid or bid requirements, either procedural or technical, may be obtained by submitting questions in writing to:

Fulton County Government
Department of Purchasing & Contract Compliance
Attn: Nancy Harrison, Assistant Purchasing Agent
Fulton County Public Safety Building
130 Peachtree Street, S.W. Suite 1168
Atlanta, GA 30303
Email: nancy.harrison@fultoncountyga.gov
Fax: 404-893-1744
Reference Bid #: 14ITB0356K-NH 2014 Standby Miscellaneous Construction – Water System Services

PRE-BID CONFERENCE

Date: Friday, March 14, 2014
Time: 2:00 PM
Location: Department of Purchasing & Contract Compliance, 130 Peachtree Street, S.W. Suite 1168
Atlanta, GA 30303

Inquiries regarding the solicitation either technical or otherwise may be submitted in writing prior to the pre-bid conference and will be addressed at the pre-bid conference.

Any additional questions asked at the Pre-Bid Conference must be submitted in written form at the Pre-Bid conference and will be responded to in the form of an addendum with the County's official responses.

The Pre-Bid Conference will be conducted for the purpose of explaining the County's bid process, the specifications/technical documents, and to provide non-binding verbal responses to questions concerning these bid specifications and to discuss issues from the Bidders perspective. However, no verbal response provided at the Pre-Bid Conference binds the County. Only those responses to written questions that are responded to by the County in written communications will be official.

BONDING REQUIREMENTS

Each Bid must be accompanied by a Bid Bond, prepared on the Bid Bond provided in this Bid Document or a Surety Company's Standard Bid Bond, duly executed by the Bidder as principal and having as surety, a surety company licensed to do business in the State of Georgia by the Georgia Insurance Commissioner and listed in the latest issue of U.S. Treasury Circular 570, in the amount of fiver percent of the Bid.

The successful Bidder for this Contract will be required to furnish a satisfactory Performance and Payment Bond each in the amount of 100 percent of the Bid, and proof of insurance in accordance with the requirements set forth in Section 5 of this Bid Document.

END OF SECTION

OWNER - CONTRACTOR AGREEMENT

2014 STANDBY MISCELLANEOUS CONTRUCTION – WATER SYSTEM SERVICES

Contractor: _____ Project No. _____

Address: _____ Telephone: _____

Contact: _____ Facsimile: _____

THIS AGREEMENT is effective as of the _____ day of _____, 2014, by and between Fulton County, a political subdivision of the State of Georgia (hereinafter called the "County"), and the above named CONTRACTOR in accordance with all provisions of this Construction Agreement ("Contract"), which consists of the following: Owner-Contractor Agreement, Owner's invitation for bid, instructions to bidders, bid form, performance bond, payment bond, acknowledgments, general conditions, special conditions, scope of work and specifications, plans, drawings, exhibits, addenda, Purchasing forms, Office of Contract Compliance Forms, Risk Management insurance provisions forms and written change orders.

The specific Exhibits of this Contract are as follows:

Exhibit A: General Conditions
Exhibit B: Special Conditions (if applicable)
Exhibit C: Addenda
Exhibit D: Bid Form
Exhibit E: Bonds (Bid, Payment & Performance)
Exhibit F: Scope of Work and Technical Specifications
Exhibit G: Exhibits
Exhibit H: Purchasing Forms
Exhibit I: Office of Contract Compliance Forms
Exhibit J: Risk Management Insurance Provisions Forms

WITNESSETH: That the said Contractor has agreed, and by these present does agree with the said County, for and in consideration of a Contract Price of **[INSERT CONTRACT AMOUNT IN WORDS],** ($**[INSERT CONTRACT AMOUNT IN NUMBERS]**) and other good and valuable consideration, and under the penalty expressed on Bonds hereto attached, to furnish all equipment, tools, materials, skill, and labor of every description necessary to carry out and complete in good, firm, and workmanlike manner, the Work specified, in strict conformity with the Drawings and the Specifications hereinafter set forth, which Drawings and Specifications together with the bid submittals made by the Contractor, General Conditions, Special Provisions, Detailed Specifications, Exhibits, and this Construction Agreement, shall all form essential parts of this Contract. The Work covered by this Contract includes all Work indicated on Plans and Specifications and listed in the Bid entitled:

Project Number: 14ITB0356K-NH

2014 STANDBY MISCELLANEOUS CONTRUCTION – WATER SYSTEM SERVICES

The Contractor, providing services as an Independent Contractor, shall commence the Work with adequate force and equipment within 10 days from receipt of Notice to Proceed ("NTP") from the County, and shall complete the work within **[INSERT CONTRACT DURATION]** calendar days from the Notice to Proceed or the date work begins, whichever comes first. The Contractor shall remain responsible for performing, in accordance with the terms of the Contract, all work

assigned prior to the expiration of the said calendar days allowed for completion of the work even if the work is not completed until after the expiration of such days. The Contractor shall agree that in the performance of this Contract he will comply with all lawful agreements, if any, which the contractor has made with any association, union or other entity, with respect to wages, salaries and working conditions, so as to cause inconvenience, picketing or work stoppage.

For each calendar day that any work remains uncompleted after the time allowed for completion of the work, the Contractor shall pay the County the sum of $ 500.00 not as a penalty but as liquidated damages, which liquidated damages the County may deduct from any money due the contractor. At the County's convenience and not to it prejudice the County may provide written notice of the commencement of the assessment of liquidated damages].

As full compensation for the faithful performance of this Contract, the County shall pay the Contractor in accordance with the General Conditions and the prices stipulated in the Bid, hereto attached.

It is further mutually agreed between the parties hereto that if, at any time after the execution of this Agreement and the Surety Bonds hereto attached for its faithful performance, the County shall deem the surety or sureties upon such bonds to be unsatisfactory, or, if, for any reason, such bonds cease to be adequate to cover the performance of the Work, the Contractor shall, at his expense, within five days after receipt of notice from the County so to do, furnish an additional bond or bonds in such form and amount, and with such surety or sureties as shall be satisfactory to the County. In such event no further payment to the Contractor shall be deemed to be due under this Agreement until such new or additional security for the faithful performance of the Work shall be furnished in manner and form satisfactory to the County.

The Contractor hereby assumes the entire responsibility and liability for any and all injury to or death of any and all persons, including the Contractor's agents, servants, and employees, and in addition thereto, for any and all damages to property caused by or resulting from or arising out of any act or omission in connection with this contract or the prosecution of work hereunder, whether caused by the Contractor or the Contractor's agents, Servants, or employees, or by any of the Contractor's subcontractors or suppliers, and the Contractor shall indemnify and hold harmless the County, the Construction Manager, County's Commissioners, officers, employees, successors, assigns and agents, or any of their subcontractors from and against any and all loss and/or expense which they or any of them may suffer or pay as a result of claims or suits due to, because of, or arising out of any and all such injuries, deaths and/or damage, irrespective of County or Construction Manager negligence (except that no party shall be indemnified for their own sole negligence). The Contractor, if requested, shall assume and defend at the Contractor's own expense, any suit, action or other legal proceedings arising there from, and the Contractor hereby agrees to satisfy, pay, and cause to be discharged of record any judgment which may be rendered against the County and the Construction Manager arising there from.

In the event of any such loss, expense, damage, or injury, or if any claim or demand for damages as heretofore set forth is made against the County or the Construction Manager, the County may withhold from any payment due or thereafter to become due to the Contractor under the terms of this Contract, an amount sufficient in its judgment to protect and indemnify it and the Construction Manager, County's Commissioners, officers, employees, successors, assigns and agents from any and all claims, expense, loss, damages, or injury; and the County, in its discretion, may require the Contractor to furnish a surety bond satisfactory to the County providing for such protection and indemnity, which bond shall be furnished by the Contractor within five (5) days after written demand has been made therefore. The expense of said Bond shall be borne by the Contractor. **[See General Conditions for similar provision]**

This Contract constitutes the full agreement between the parties, and the Contractor shall not sublet, assign, transfer, pledge, convey, sell or otherwise dispose of the whole or any part of this Contract or his right, title, or interest therein to any person, firm or corporation without the previous consent of the County in writing. Subject to applicable provisions of law, this Contract shall be in full force and effect as a Contract, from the date on which a fully executed and approved counterpart hereof is delivered to the Contractor and shall remain and continue in full force and effect until after the expiration of any guarantee period and the Contractor and his sureties are finally released by the County.

This agreement was approved by the Fulton County Board of Commissioner on [Insert approval date and item number].

[SIGNATURES NEXT PAGE]

IN WITNESS THEREOF, the Parties hereto have caused this Contract to be executed by their duly authorized representatives as attested and witnessed and their corporate seals to be hereunto affixed as of the day and year date first above written.

OWNER:

FULTON COUNTY, GEORGIA

John H. Eaves, Commission Chair
Board of Commissioners

ATTEST:

Mark Massey
Clerk to the Commission (Seal)

APPROVED AS TO FORM:

Office of the County Attorney

APPROVED AS TO CONTENT:

Kun Suwanarpa Interim Director
Department of Water and Sewer

CONTRACTOR:

[Insert Contractor COMPANY NAME]

[Insert Name & Title of person authorized to sign contract]

ATTEST:

Secretary/
Assistant Secretary

(Affix Corporate Seal)

END OF SECTION

INSTRUCTIONS TO BIDDERS

1. CONTRACT DOCUMENTS

The Contract Documents include the Contract Agreement, Contractor's Bid (including all documentation accompanying the Bid and any post-Bid documentation required by the County prior to the Notice of Award), Bonds, all Special Conditions, General Conditions, Supplementary Conditions, Specifications, Drawings and addenda, together with written amendments, change orders, field orders and the Construction Manager's written interpretations and clarifications issued in accordance with the General Conditions on or after the date of the Contract Agreement.

Shop drawing submittals reviewed in accordance with the General Conditions, geotechnical investigations and soils report and drawings of physical conditions in or relating to existing surface structures at or contiguous to the site are not Contract Documents.

The Contract Documents shall define and describe the complete work to which they relate.

2. BID PREPARATION

Bidders shall **SUBMIT ONE (1) ORIGINAL, SIGNED AND DATED, AND TWO (2) COPIES** on the forms provided in the Bid Document.

All bids must be made on the bid forms contained herein and shall be subject to all requirements of the Agreement Documents. All bids must be regular in every respect and no interlineations, excisions, or special conditions shall be made or included in the bid by the Bidder.

Lump sum, unit price and extensions of unit prices must be entered in the appropriate spaces provided on the Bid Schedule/Bid Form. Unit prices shall include an appropriate allocation of overhead and other indirect costs so that the summation of unit price extensions and lump sum items represents the total bid amount. All blank spaces must be typed or hand written in blue ink on the “Original”. All dollar amounts must be BOTH in writing and figures and represent prices for the published scope of work without exceptions.

The County may, in its sole discretion, reject any bid determined as irregular, a conditional bid or any bid on which there is an alteration of, or departure from the Bid Schedule attached.

Erasures or other changes in the bids must be explained or noted over the signature of the Bidder. All corrections to any entry must be lined out and initialed by the Bidder. Please do not use correction tapes or fluid. Failure to do so shall render the Bidder as non-responsive and cause rejection of the bid.

Failure to execute the Bid Schedule/Bid Form documents may result in Bidder being deemed non-responsive and cause rejection of the bid.

3. RECIEPT AND OPENING OF BIDS

Sealed bids will be received by the Fulton County Department of Purchasing & Contract Compliance at Fulton County Public Safety Building, 130 Peachtree Street, S.W., Suite 1168 Atlanta, Georgia 30303. All submitted bids shall be time and date stamped according to the clock at the front desk of the Fulton County Department of Purchasing & Contract Compliance. The original signed Bid with three (3) copies shall be submitted in a sealed envelope, addressed to the Department of Purchasing and Contract Compliance and labeled 14ITB0356K-NH 2014 Standby Miscellaneous Construction- Water System Services**.**

REQUIRED SUBMITTALS: The bidder **must complete and execute** the following:

1. Bid Form
2. Acknowledgement of each Addendum
3. Bid Bond
4. Purchasing Forms (See Submittal Check List at end of this Section), fully executed
5. Contract Compliance Forms (See Submittal Check List at end of this Section), fully executed
6. Risk Management Insurance Provisions Form

Any bids received after the stated time and date will not be considered. It shall be the sole responsibility of the bidder to have his/her bid delivered to the Fulton County Department of Purchasing and Contract Compliance for receipt on or before the stated time and date. If a bid is sent by U.S. Mail, the bidder shall be responsible for its timely delivery to the Purchasing Department. Bids delayed by mail will not be considered, shall not be opened, and arrangements shall be made for their return at the bidder's request and expense.

Bid shall be publicly opened, with only the names and total bid price of the bidders disclosed at the opening.

4. ADDENDA AND INTERPRETATIONS

No interpretations of the meaning of the Drawings, Specifications or other pre-bid documents will be made to any Bidder orally.
Bidders requiring clarification or interpretation of the Contract Documents shall make a request in writing, either by mail, hand delivery, e-mail or fax, to the Purchasing Agent at the address below. To be given consideration, requests must be received no later than 2:00 PM, **March 17, 2014**. The County will not respond to any requests, oral or written, received after this date. Telephone inquiries will not be accepted.

Department of Purchasing and Contract Compliance
Attn: Nancy Harrison, Assistant Purchasing Agent
Fulton County Public Safety Building
130 Peachtree Street, S.W., 1168
Atlanta, GA 30303
Fax: (404) 893-1744
Nancy.harrison@fultoncountyga.gov
Bid # 14ITB0356K-NH 2014 Standby Miscellaneous Construction- Water System Services

Only communications from firms that are in writing and signed will be recognized by the County as duly authorized expressions on behalf of proposers/bidders. Any and all such interpretations and any supplemental instructions will be in the form of written Addenda to the Specifications which, if any addend are issued to this Invitation to Bid.

Failure of Bidders to receive or acknowledge any Addendum shall not relieve them of any obligation under the Bid. All Addenda shall become part of the Contract Documents.

5. SITE EXAMINATION

There will not be a scheduled site visit for this project.

6. BIDDER'S MODIFICATION AND WITHDRAWAL OF BIDS

A Bidder may modify or withdraw its bid by written request, provided that the request is received by the County prior to the bid due date and time at the address to which bids are to be submitted. Provided further, that in case of an electronic request (i.e. facsimile, e-mail, etc.) a written confirmation thereof over the authorized signature of the Bidder must be received by the County at the address to which original Bids are to be submitted within three (3) calendar days after issue of the electronic message. Following withdrawal of its bid, the Bidder may submit a new bid, providing delivery is affected prior to the established bid opening date and time. **No bid may be withdrawn after bid due date for sixty (60) calendar days.**

7. BID AND CONTRACT SECURITY

A.

A Bid Bond for an amount equal to five percent (5%) of the bid amount must accompany each Proposal. The bid bond shall be submitted in a separate, sealed envelope marked "Bid Bond".

Bids must be accompanied by a bid bond or certified check in an amount of five percent (5%) of the TOTAL AMOUNT of the base bid. The bid bond or certified check shall apply ONLY TO THIS BID. The bid name and contract number must appear on the security instrument. The bond must remain in full force and effect until the Bidder executes the final Contract. Bids not satisfying the bonding requirements of this project will be declared non-responsive.

Any bid bond, performance bond, payment bond, or security deposit required for public works construction contract shall be approved and filed with purchasing agent. At the option of the County, if the surety named in the bond is other than a surety company authorized by law to do business in this state pursuant to a current certificate of authority to transact surety business by the Commissioner of Insurance, such bond shall not be approved and filed unless such surety is on the United States Department of Treasury's list of approved bond sureties.

A Purchasing Agent shall approve as to form and as to the solvency of the surety any bid bond, performance bond, or payment bond required by this. In the case of a bid bond, such approval shall be obtained prior to acceptance of the bid or proposal. In the case of payment bonds and performance bonds, such approval shall be obtained prior to the execution of the contract.

Whenever, in the judgment of the County:

(1) Any surety on a bid, performance, or payment bond has become insolvent;
(2) Any corporation surety is no longer certified or approved by the Commissioner of Insurance to do business in the state; or
(3) For any cause there are no longer proper or sufficient sureties on any or all the bonds

The County may require the contractor to strengthen any or all of the bonds or to furnish a new or additional bond or bonds within ten days. Thereupon, if so ordered by the County, all work on the contract shall cease unless such new or additional bond or bonds are furnished. If such bond or bonds are not furnished within such time, the County may terminate the contract and complete the same as the agent of and at the expense of the contractor and his or her sureties.

As a condition of responsiveness the bidder must contain a Bid Bond for an amount equal to 5% of the bid amount. The Bid Bond shall be included in a separate envelope marked on the outside "Bid Bond". Checks or letters of credit of any type will not be accepted. A certified cashier's check will be acceptable. Provide a completed and fully executed Bid Bond. When the bidder's package is opened, a purchasing agent will verify the presence of the Bid Bond and remove it from the Proposal Package.

If the bidder withdraws its bid from the competition after the selection of its bid for a reason not authorized by Georgia law, the County will proceed on the Bid Bond, along with any other available remedies.

The Surety of the Bid Bond shall be from a surety company authorized to do business in the State of Georgia, shall be listed in the Department of Treasury Circular 570, and shall have an underwriting limitation in excess of 100% of the bid amount. The Bonds and Surety shall be subject to approval by the County Attorney.

Attorneys-in-fact for bidders who sign bid bonds or contract bonds must file with each bond a certified and effectively dated copy of their power of attorney.

8. SURETY BONDS

The submission of surety bonds subsequent to the Bid submission shall be:

a. Any surety bond submitted in accordance with the Bid or Agreement requirements must be issued by a corporate surety company satisfactory to the Commission and authorized to act as such in the State of Georgia;

b. Such bonds shall conform to the forms provided with the Bid Documents and be completed in accordance with the instructions thereon; and

c. In accordance with Georgia law, and upon award of the Agreement, separate performance and payment bonds shall be required of the successful Bidder, each in an amount not less than the total amount payable under the Agreement. The performance bond shall remain in effect for one (1) year after final acceptance of the Work or the guaranty period under the Agreement, whichever is the larger.

The payment bond shall remain in effect for the period required under Georgia law for the payment bonds on public construction agreements. Reference is made to the bond forms and the Agreement Documents for additional particulars of the terms required in the bonds. In the case of any inconsistency between the Bond Forms and Georgia law, the law shall control. Alterations, extension of the time allowed for performance, extra and additional Work, and other changes authorized under the Agreement may be made without notice to or consent of the surety or sureties.

9. INSURANCE REQUIREMENTS

The Contractor shall procure and maintain during the life of this Agreement, Workmen's Compensation, Public Liability, Property Damage, Automobile Liability insurance and any other insurance necessary to satisfy the requirements of the Agreement Documents.

10. RIGHT TO REJECT BIDS

The County reserves the right to reject any or all bids and to waive informalities. No bids will be received after the time set for opening bids. Any unauthorized conditions, limitations or provisions attached to the Bid, except as provided herein, will render it informal and may cause its rejection. Unbalanced bids will be subject to rejection. Any bidder may withdraw his/her bid, either personally or by telegraphic or written request, at any time prior to the scheduled closing time for receipt of bids. Telegraphic or written requests for withdrawal must be in the possession of the County prior to the closing time for receipt of bids.

11. APPLICABLE LAWS

All applicable laws and regulations of the State of Georgia and ordinances and regulations of Fulton County shall apply. Protestors shall seek resolution of their complaints in the manner provided in the Fulton County Purchasing Code §102-488 et. seq., which is incorporated by reference herein.

12. EXAMINATION OF CONTRACT DOCUMENTS

Prospective bidders shall examine the contract documents and before submitting a bid, shall make a written request to the County for an interpretation or correction of any ambiguity, in consistency or error therein which could be discovered by a bidder. At the bid opening each bidder shall be presumed to have read and be familiar with the contract documents.

13. BID EVALUATION

a. Each Bid timely received and in the County's hands at the time set forth for the Bid opening shall constitute an offer to perform the Agreement on the terms and conditions thereof, in strict accordance with the Agreement documents, and all other requirements, all for the Bid total. For good cause and valuable consideration, the sufficiency of which is acknowledged by submittal of a Bid, each Bidder promises and agrees that its Bid shall be irrevocable for a period of ***sixty calendar days*** after the Bid opening and will not be withdrawn or modified during that time. The County may accept any Bid by giving the Bidder Written Notice of acceptance during that time. If necessary, the period of time specified may be extended by written agreement between the County and the Bidder or Bidders concerned.

b. After the Bids have been opened and before any award is made, the County will evaluate the Bid process, the Bid total, the supplements to the Bid form, Bidder's experience, proposed Subcontractors and equipment manufacturers and other data relating to Bidders' responsibility and qualifications to perform the Agreement satisfactorily.

c. All extension of the unit prices shown and the subsequent addition of extended amounts may be verified by the County. In the event of a discrepancy between the unit price bid and the extension, the unit price will be deemed intended by the Bidder and the extension shall be adjusted. In the event of a discrepancy between the sum of the extended amounts and the bid total, the sum of the extended amounts shall govern.

d. Bidder may be required to submit, in writing, the addresses of any proposed Subcontractors or Equipment manufacturers listed on the Bid, and to submit other material information relative to proposed Subcontractors or Equipment manufacturers. The County reserves the right to disapprove any proposed Subcontractor or Equipment manufacturers whose technical or financial ability or resources or whose experience are deemed inadequate.

e. The County reserves the right to reject any Bid the prices of which appear to be unbalanced, and to reject any or all Bids, or parts thereof, if it determines, in its sole discretion, that such rejection is in the best interest of the Commission. Where only a single responsible and responsive Bid is received, the County may in its sole discretion, elect to conduct a price or cost analysis of the Bid. Such Bidder shall cooperate with such analysis and provide such supplemental information as may be required. The determination whether to enter into an Agreement with such sole Bidder

shall be solely within the County's discretion and not dependent upon performance of a price or cost analysis.

f. Bids will be evaluated on the basis of determining the lowest Bid total of a Bidder, not including alternates, whose Bid is responsive to the Invitation to Bid and who is determined to be technically, financially and otherwise responsible to perform the Agreement satisfactorily, and to meet all other requirements of the Bidding Documents relating thereto. Any Bid may be rejected if it is determined by the County to be non-responsive, provided, however, that the Commission reserves the right to waive any irregularities or technicalities which it determines, within its sole discretion, to be minor in nature and in the interest of the public. Furthermore, any Bid may be rejected if it is determined by the County, in its sole discretion, that the Bidder is not capable of performing the Agreement satisfactorily based upon review of its experience and technical and financial capabilities, or the failure of such bidder to provide information requested relating to such determination. Additionally, the County reserves the right to disqualify Bids, before and after the bid opening, upon evidence of collusion with intent to defraud or other illegal practices upon the part of any Bidder(s).

g. The County intends to award the Agreement at the earliest practicable date to the lowest responsive, responsible Bidder(s), provided that the Bid is within the funds available for the project. In addition, the Commission reserves the right to reject all Bids if it determines, in its sole discretion, that the public interest will be best served by doing so.

h. A Pre-award Conference may be conducted with the apparent low Bidder(s) to review general requirements of the Bidding Documents.

14. AWARD CRITERIA

Award will be made after evaluating the prices, responsiveness and responsibility of each Bidder.

A. **Responsiveness:** The determination of responsiveness will be determined by the following:

   a. The completeness of all material, documents and/or information required by the County;
   b. Whether the bidder has submitted a complete Bid form without irregularities, excisions, special conditions, or alternative bids for any item unless specifically requested in the Bid form.

B. **Responsibility:** The determination of the bidder's responsibility will be determined by the following

   a. The ability, capacity and skill of the Bidder to perform and/or provide the Work required;
   b. The County reserves the right to reject any bid if the evidence submitted by, or investigation of, the bidder fails to satisfy the County

that he/she is properly qualified to carry out the obligations of the Contract;

c. The character, integrity, reputation, judgment, experience and efficiency of the Bidder;
d. The quality of performance of work on previous contracts or work; Maintains a permanent place of business individually or in conjunction with the prime contractor.
e. Has the appropriate and adequate technical experience necessary to perform the Work;
f. Has adequate personnel and equipment to do the Work expeditiously;
g. Has suitable financial means to meet obligations incidental to the work.

15. DISQUALIFICATION OF BIDDERS

Any of the following may be considered as sufficient for disqualification of a Bidder and the rejection of the Bid:

a. Submission of more than one Bid for the same work by an individual, firm, partnership or Corporation under the same of different name(s);

b. Evidence of collusion among Bidders;

c. Previous participation in collusive bidding on Work for the County;

d. Submission of an unbalanced Bid, in which the prices quoted for same items are out of proportion to the prices for other items;

e. Lack of competency of Bidder. The Agreement will be awarded only to a Bidder(s) rated as capable of performing the Work.

16. BASIS OF AWARD

The Contract, if awarded, will be awarded to the lowest responsive and responsible bidder(s). No bid may be withdrawn for a period of sixty (60) days after the date of bid opening except as permitted by O.C.G.A., §36-91-41 et seq., as amended. Each Bid must be accompanied by a Bid Bond in accordance with the Bid Bond Requirements provided in the Contract Documents, on a Surety Company's Standard Bid Bond Form acceptable to the County in an amount no less than 5% of the amount bid. The successful bidder(s) will be required to furnish a Performance Bond and Payment Bond, **on or before** the issuance of Notice to Proceed, each in the amount of 100% of the Contract Amount. All other required Contract Documents must be fully completed and executed by the Contractor and his/her Surety, and submitted to the Owner **on or before** the issuance of the Notice to Proceed.

PROFESSIONAL LICENSES *(APPLICABLE)*

The State of Georgia requires that the following professions are required by state law to be licensed:

1. Electricians
2. Plumbers
3. Conditioned Air Contractors
4. Low voltage Contractors
5. Utility Contractors

Bidders and any sub-contractors performing any of the above described work must provide a copy of their license for the work they will perform on this project. Bidders must complete Form C3: Georgia Professional License Certification in Section 6, Purchasing Forms Failure to provide the required license may deem your bid non-responsive.

17. WAGE CLAUSE

Pursuant to 102-413, Each Contractor shall agree that in the performance of the Contract he will comply with all lawful agreements, if any, which the Contractor had made with any association, union, or other entity, with respect to wages, salaries, and working conditions, so as not to cause inconvenience, picketing, or work stoppage.

18. NOTICE OF AWARD OF CONTRACT

As soon as possible, and within sixty (60) days after receipt of bids, the County shall notify the successful Bidder of the Award of Contract.

The award shall be made by the Board of Commissioners of Fulton County to the lowest responsive, responsible bidder(s) as soon as possible after receipt of bids, taking into consideration price and the responsiveness to the requirements set forth in the Invitation for Bid. In such case, no claim shall be made by the selected Contractor(s) for loss of profit if the contract is not awarded or awarded for less work than is indicated and for less than the amount of his bid. The total of the awarded contract shall not exceed the available funds allocated for this project.

Should the County require additional time to award the contract, the time may be extended by mutual agreement between the County and the successful bidder. If an Award of Contract has not been made within sixty (60) days from the bid date or within the extension mutually agreed upon, the Bidder may withdraw the Bid without further liability on the part of either party.

Any award made by the Board of Commissioners as a result of this bid will begin from the date of the notice to proceed. The Bidder agrees hereby to commence work under this Contract, with adequate personnel and equipment, on a date to be specified in a written order from the user department. The contract shall become effective on the Contract Date and shall continue in effect until the end of the term of the contract or until the project has been closed-out unless earlier terminated pursuant to the termination provisions of the contract.

19. EXECUTION OF CONTRACT DOCUMENTS

Upon notification of Award of Contract, the County shall furnish the Contractor the conformed copies of Contract Documents for execution by the Contractor and Contractor's surety.

Within ten (10) days after receipt the Contractor shall return all the documents properly executed by the Contractor and the Contractor's surety. Attached to each document shall be an original power-of-attorney for the person executing the bonds for the surety and certificates of insurance for the required insurance coverage.

After receipt of the documents executed by the Contractor and his surety with the power-of-attorney and certificates of insurance, the County shall complete the execution of the documents. Distribution of the completed documents will be made upon completion.

Should the contractor and/or surety fail to execute the documents within the time specified, the County shall have the right to proceed on the Bid Bond accompanying the bid.

If the County fails to execute the documents within the time limit specified, the Contractor shall have the right to withdraw the Contractor's bid without penalty.

Should an extension of any of the time limits stated above be required, this shall be done only by mutual agreement between both parties.

Any agreement or contract resulting from the acceptance of a bid shall be on a County approved document form. The County reserves the right to reject any agreement that does not conform to the Invitation for Bid and any County requirements for agreements and contracts. The County reserves the right to modify the agreement resulting from this bid upon the recommendation of the County Attorney.

20. EQUAL EMPLOYMENT OPPORTUNITY ("EEO") IN PURCHASING AND CONTRACTING

To be eligible for award of this Agreement, the Bidder must certify and fully comply with the requirements, terms, and conditions of the County's Non Discrimination in Contracting and Procurement.

21. JOINT VENTURE

Any Bidder intending to respond to this solicitation as a joint venture must submit an executed joint venture agreement with its offer. The agreement must designate those persons or entities authorized to execute documents or otherwise bind the joint venture in all transactions with Fulton County, or be accompanied by a document, binding upon the joint venture and its constituent members, making such designation. Offers from joint ventures that do not include these documents will be rejected as being non-responsive.

22. CONTRACTORS COMPLIANCE WITH ALL ASSURANCES AND/OR PROMISES MADE IN RESPONSE TO PROCUREMENT

Should any Bidder submit a response to the County promising to provide a certain level of service for either the scope of work, MFBE participation, or any other matter, including where such promise or assurance is greater than what is required by the procurement documents, and should this response containing the promise or assurance be accepted by the County and made a part of the Contract Documents, then this degree or level of service promised by the bidder relating to the scope of work, MFBE participation, or other matter shall be considered to be a material part of the Agreement between the bidder and the County, such that the bidder's failure to provide the agreed upon degree or level of service or participation shall be a material breach of the Agreement giving the County just cause to terminate the Agreement for cause, pursuant to the General Conditions of the Agreement.

23. GEORGIA SECURITY AND IMMIGRATION COMPLIANCE ACT

This Invitation to Bid is subject to the Georgia Security & Immigration Compliance Act. Pursuant to the Georgia Security & Immigration Compliance Act of 2006, as amended on May 11, 2009, bidders and proposers are notified that all bids/proposals for services that are to be physically performed within the State of Georgia must be accompanied by proof of their registration with and continuing and future participation in the E-Verify program established by the United States Department of Homeland Security. A completed affidavit must be submitted on the top of the bid/proposal at the time of submission, prior to the time for opening bids/proposals. Under state law, the County cannot consider any bid/proposal which does not include a completed affidavit. It is not the intent of this notice to provide detailed information or legal advice concerning the Georgia Security & Immigration Compliance Act. All bidders/proposers intending to do business with the County are responsible for independently apprising themselves and complying with the requirements of that law and its effect on County procurements and their participation in those procurements. For additional information on the E-Verify program or to enroll in the program, go to: https://e-verify.uscis.gov/enroll.

See Section 00420, Purchasing Forms & Instructions for declarations and affidavits.

24. SUBCONTRACTING OPPORTUNITIES

Potential prime contractors submitting a bid on this project for Fulton County and are seeking subcontractors and/or suppliers can advertise those subcontracting opportunities on the County's website, http://www.fultoncountyga.gov under "Subcontracting Bid Opportunities".

25. TERM OF CONTRACT

The period of this Agreement shall consist of a series of Terms as defined below. The County is obligated only to pay such compensation under this Agreement as

may lawfully be made from funds budgeted and appropriated for that purpose during the County's then current fiscal year.

a. Commencement Term

The "Commencement Term" of this Agreement shall begin on [Insert start date],the starting date, and shall end absolutely and without further obligation on the part of the County on the 31st day of December, 2014. The Commencement Term shall be subject to events of termination and the County's termination rights that are described elsewhere in this Agreement. Notwithstanding anything contained in this Agreement, the County's obligation to make payments provided under this Agreement shall be subject to the County's annual appropriations of funds for the goods, services, materials, property and/or supplies procured under this Agreement by the County's governing body and such obligation shall not constitute a pledge of the County's full faith and credit within the meaning of any constitutional debt limitation.

b. Renewal Terms

Unless the terms of this Agreement are fulfilled with no further obligation of the part of either party on or before the final date of the Commencement Term as stated above, or unless an event of termination as defined within this Agreement occurs during the Commencement Term, this Agreement may be renewed at the written option of the County upon the approval of the County Board of Commissioners for two (2) one-year ("Renewal Terms"). However, no Renewal Term of this Agreement shall be authorized nor shall any Renewal Term of this Agreement commence unless and until each Renewal Term has first been approved in writing by the County Board of Commissioners for the calendar year of such Renewal Term. If approved by the County Board of Commissioners, the First Renewal Term shall begin on the 1st day of January, 2015 and shall end no later than the 31st day of December, 2015. If approved by the County Board of Commissioners, the Second Renewal Term shall begin on the 1st day of January, 2015 and shall end no later than the 31st day of December, 2015. If approved by the County Board of Commissioners, the third Renewal Term shall begin on the 1st day of January, 2016 and shall end no later than the 31st day of December, 2016. If the County chooses not to exercise any Renewal Term as provided in this Section, then the Term of this Agreement then in effect shall also be deemed the "Ending Term" with no further obligation on the party of either party.

c. Term Subject to Events of Termination

All "Terms" as defined within this Section are subject to the section of this Agreement which pertain to events of termination and the County's rights upon termination.

d. Same Terms

Unless mutually agreed upon in writing by the parties, or otherwise indicated herein, all provisions and conditions of any Renewal Term shall be exactly the same as those contained within in this Agreement.

e. Statutory Compliance Regarding Purchase Contracts.

The parties intend that this Agreement shall, and this Agreement shall operate in conformity with and not in contravention of the requirements of O.C.G.A. § 36-60-13, as applicable, and in the event that this Agreement would conflict therewith, then this Agreement shall be interpreted and implemented in a manner consistent with such statute.

26. NO CONTACT PROVISION

It is the policy of Fulton County that the evaluation and award process for County contracts shall be free from both actual and perceived impropriety, and that contacts between potential vendors and County officials, elected officials and staff regarding pending awards of County contracts shall be prohibited.

A. No person, firm, or business entity, however situated or composed, obtaining a copy of or responding to this solicitation, shall initiate or continue any verbal or written communication regarding this solicitation with any County officer, elected official, employee, or designated County representative, between the date of the issuance of this solicitation and the date of the County Manager's recommendation to the Board of Commissioners for award of the subject contract, except as may otherwise be specifically authorized and permitted by the terms and conditions of this solicitation.

B. All verbal and written communications initiated by such person, firm, or entity regarding this solicitation, if same are authorized and permitted by the terms and conditions of this solicitation, shall be directed to the Purchasing Agent.

C. Any violation of this prohibition of the initiation or continuation of verbal or written communications with County officers, elected officials, employees, or designated County representatives shall result in a written finding by the Purchasing Agent that the submitted Bid or proposal of the person, firm, or entity in violation is "non-responsive", and same shall not be considered for award.

27. AUTHORIZATION TO TRANSACT BUSINESS

If the Contractor is a corporation or corporations combined to form a joint venture, the corporation or members of the joint venture team, prior to Agreement execution, must submit documentary evidence from the Secretary of State that the corporation is in good standing and that the corporation is authorized to transact business in the State of Georgia.

28. PRE-CONSTRUCTION CONFERENCE

A pre-construction conference may be held with the successful Bidder and all known Subcontractors at a time and place set by the County.

29. SUBSTITUTIONS

See Special Conditions Article.

30. RIGHT TO PROTEST

Any actual bidder or offeror that has submitted a bid/proposal for a particular procurement and is aggrieved in connection with the solicitation or award of the contract shall protest in writing to the purchasing agent after the date that the specific bid or proposal is submitted. No protest will be accepted or considered prior to the date the specific bid or proposal is submitted; it will be considered untimely. All protests shall set forth in full detail the factual and legal bases for the protest and specific relief sought by the protestor. Protests arising from factual or legal bases that the protestor knew or should have known prior to the submission of the bid/proposal must be submitted within three business days of the submission of the bid/proposal. Protests arising from factual or legal bases that the protestor knew or should have known subsequent to the date the bid/proposal was submitted must be submitted within ten business days after the protestor knew or should have known of such bases, but in no event shall any protest be submitted more than ten business days after the award of the contract. Untimely protests will not be considered by the purchasing agent and will be simply denied as untimely. Decisions on timeliness by the purchasing agent are not appealable. An oral protest or a protest to an official, employee, User Department, or other person apart from the Director of Purchasing & Contract Compliance does not comply.

31. BID GENERAL CONDITIONS

1. Proposals may be withdrawn upon receipt of a written request prior to the stated due date and time. If a firm seeks to withdraw a proposal after the due date and time, the firm must present a notarized statement indicating that an error was made, with an explanation of how it occurred. The withdrawal request must be accompanied by documentation supporting the claim. Prior to approving or disapproving the request, an opinion will be obtained from Fulton County's Legal Counsel indicating whether the firm is bound by its proposal.

Proposals for projects that are solicited pursuant to the Georgia Local Government Public Works Construction Law (O.C.G.A. § 36-91-1 et seq.) may be withdrawn as follows:

The County must advise Offerors in the request for proposals of the number of days that Offerors will be required to honor their proposals. If an Offeror is not selected within 60 days of opening the proposals, any Offeror that is determined by the governmental entity to be unlikely of being selected for contract award will be released from the proposal.

2. Fulton County shall be the sole judge of the quality and the applicability of all proposals. Design, features, overall quality, local facilities, terms and other pertinent considerations will be taken into account in determining acceptability.

3. The successful Offeror must assume full responsibility for delivery of all goods and services proposed.

4. The successful Offeror must assume full responsibility for replacement of all defective or damaged goods and/or performance of contracted services within thirty (30) days' notice by the County of such defect, damage or deficiency.

5. The successful Offeror must assume full responsibility for providing warranty service on all goods, materials, or equipment provided to the County with warranty coverage. Should a vendor be other than the manufacturer, the vendor and not the County is responsible for contacting the manufacturer. The Offeror is solely responsible for arranging for the service to be performed.

6. The successful Offeror shall be responsible for the proper training and certification of personnel used in the performance of the services proposed.

7. The successful Offeror shall not assign, transfer, convey, sublet, or otherwise dispose of any contract resulting from the RFP or of any of its rights, title or interest therein without prior written consent of the Fulton County Board of Commissioners.
8. In case of default by the successful Offeror, Fulton County may procure the articles or services from another source and hold the successful Vendor responsible for any resultant excess cost.
9. All proposals and bids submitted to Fulton County are subject to the Georgia "Open Records Act", Official Code of Georgia, Annotated (O.C.G.A.) § 50-18-70 et seq.

10. All proposals and bids submitted to Fulton County involving Utility Contracting are subject to the Georgia law governing licensing of Utility Contractors, O.C.G.A. §43-14-8.2(h).

32. SUBMITTALS

The following submittals must be completed and submitted with the Bid Submittal. This checklist is provided to ensure that the Bidder submits certain required information with its Bid.

	Bid Submittal Check Sheet	**Check (√)**
1.	**Georgia Security and Immigration Contractor Affidavit(s) and Agreements**	
2.	**Georgia Security and Immigration Subcontractor Affidavit(s)**	
3.	**Bid Form**	
4.	**Acknowledgment of Addenda**	
5.	**Bid Bond**	
6.	**Non-Collusion Affidavit**	
7.	**Certificate of Acceptance of Request for Bid**	
8.	**Georgia Utility Contractor's License (if applicable)**	
9.	**Georgia General Contractors License (if applicable)**	
10.	**Georgia Professional License (if applicable)**	
11.	**Certificate Regarding Debarment**	
12.	**Disclosure Form and Questionnaire**	
13.	**Office of Contract Compliance Requirements (submitted in a separate envelope)**	
14.	**Proof of Insurance Coverage**	

END OF SECTION

BID FORM

Submitted To: Fulton County Government

Submitted By: _____

For: Bid# **14ITB0356K-NH Standby Miscellaneous Construction-Water System Services**

Submitted on _____, 2014.

The undersigned, as Bidder, hereby declares that the only person or persons interested in the Bid as principal or principals is or are named herein and that no other person than herein mentioned has any interest in this Bid or in the Contract to be entered into; that this Bid is made without connection with any other person, company or parties making a Bid; and that it is in all respects fair and in good faith without collusion or fraud.

The Bidder further declares that he has examined the site of the work and informed himself fully in regard to all conditions pertaining to the place where the work is to be done; that he has examined the Drawings and Specifications for the work and contractual documents relative thereto, and has read all instructions to Bidders and General Conditions furnished prior to the openings of bids; that he has satisfied himself relative to the work to be performed.

The Bidder proposes and agrees, if this Bid is accepted, to contract with the Board of Commissioners of Fulton County, Atlanta, Georgia, in the form of contact specified, to furnish all necessary materials, equipment, machinery, tools, apparatus, means of transportation and labor necessary, and to complete the construction of the work in full and complete accordance with the shown, noted, and reasonably intended requirements of the Specifications and Contract Documents to the full and entire satisfaction of the Board of Commissioners of Fulton County, Atlanta, Georgia, with a definite understanding that no money will be allowed for extra work except as set forth in the attached General Conditions and Contract Documents for the following prices.

THE BASE BID IS THE AMOUNT UPON WHICH THE BIDDER WILL BE FORMALLY EVALUATED AND WHICH WILL BE USED TO DETERMINE THE LOWEST RESPONSIBLE BIDDER.

The base bid may not be withdrawn or modified for a period of sixty (60) days following the receipt of bids.

BASE BID AMOUNT (Do not include any Bid Alternates)

$_____
(Dollar Amount In Numbers)

_____
(Dollar Amount in Words)

Make sure that all line items below are accurately calculated and total up to the inclusive BASE BID TOTAL amount entered on Page 1.

Method of Bidding

The unit or lump sum price for each of the several items in the Bid of each Bidder shall include its pro rata share of overhead and profit so that the sum of the products, obtained by multiplying the quantity shown for each item by the unit price, represents the total Bid. Any Bid not conforming to this requirement may be rejected. Additionally, Unbalanced Bids or conditional Bids will be subject to rejection. The special attention of all Bidders is called to this provision, for should conditions make it necessary to revise the quantities, no limit will be fixed for such increased or decreased quantities nor extra compensation allowed.

ITEM 1 - CONTRACTOR MOBILIZATION/ DEMOBILIZATION

a.	5	Each	For Each Project Less Than $25,000	$ 500.00/EA	$ 2,500.00
b.	10	Each	For Each Project $25,000 to $75,000	$ 1,000.00/EA	$ 10,000.00
c.	7	Each	For Each Project Greater Than $75,000	$ 1,500.00/EA	$ 10,500.00

ITEM 2 - 6-INCH DIP WATER MAIN

a.	1500	L.F.	0.0 - 8.0 Foot Depth	$ _____/L.F.	$ _____
b.	200	L.F.	8.1 - 16.0 Foot Depth	$ _____/L.F.	$ _____

ITEM 3 - 6-INCH RJ-DIP WATER MAIN

a.	500	L.F.	0.0 - 8.0 Foot Depth	$ _____/L.F.	$ _____
b.	50	L.F.	8.1 - 16.0 Foot Depth	$ _____/L.F.	$ _____

ITEM 4 - 8-INCH DIP WATER MAIN

a.	1500	L.F.	0.0 - 8.0 Foot Depth	$ _____/L.F.	$ _____
b.	50	L.F.	8.1 - 16.0 Foot Depth	$ _____/L.F.	$ _____
c.	60	L.F.	Installed in 16-inch Steel Casing	$ _____/L.F.	$ _____
d.	500	L.F.	Labor cost to install County provided 8-inch DIP water main	$ _____/L.F.	$ _____

ITEM 5 - 8-INCH RJ-DIP WATER MAIN

a.	1000	L.F.	0.0 - 8.0 Foot Depth	$ _____/L.F.	$ _____
b.	50	L.F.	8.1 - 16.0 Foot Depth	$ _____/L.F.	$ _____
c.	60	L.F.	Installed in 16-inch Steel Casing	$ _____/L.F.	$ _____

ITEM 6 - 10-INCH DIP WATER MAIN

a.	1500	L.F.	0.0 - 8.0 Foot Depth	$ _____/L.F.	$ _____
b.	50	L.F.	8.1 - 16.0 Foot Depth	$ _____/L.F.	$ _____
c.	60	L.F.	Installed in 16-inch Steel Casing	$ _____/L.F.	$ _____
d.	500	L.F.	Labor cost to install County provided 10-inch DIP water main	$ _____/L.F.	$ _____

ITEM 7 - 10-INCH RJ-DIP WATER MAIN

a.	1000	L.F.	0.0 - 8.0 Foot Depth	$ _____/L.F.	$ _____
b.	50	L.F.	8.1 - 16.0 Foot Depth	$ _____/L.F.	$ _____
c.	60	L.F.	Installed in 16-inch Steel Casing	$ _____/L.F.	$ _____

ITEM 8 - 12-INCH DIP WATER MAIN

a.	1500	L.F.	0.0 - 8.0 Foot Depth	$ _____/L.F.	$ _____
b.	50	L.F.	8.1 - 16.0 Foot Depth	$ _____/L.F.	$ _____
c.	60	L.F.	Installed in 18-inch Steel Casing	$ _____/L.F.	$ _____
d.	500	L.F.	Labor cost to install County provided 12-inch DIP water main	$ _____/L.F.	$ _____

ITEM 9 - 12-INCH RJ-DIP WATER MAIN

a.	1000	L.F.	0.0 - 8.0 Foot Depth	$ _____/L.F.	$ _____
b.	50	L.F.	8.1 - 16.0 Foot Depth	$ _____/L.F.	$ _____
c.	60	L.F.	Installed in 18-inch Steel Casing	$ _____/L.F.	$ _____

ITEM 10 - 16-INCH DIP WATER MAIN

a.	600	L.F.	0.0 - 8.0 Foot Depth	$ _____/L.F.	$ _____
b.	50	L.F.	8.1 - 16.0 Foot Depth	$ _____/L.F.	$ _____
c.	60	L.F.	Installed in 24-inch Steel Casing	$ _____/L.F.	$ _____

ITEM 11 - 16-INCH RJ-DIP WATER MAIN

a.	400	L.F.	0.0 - 8.0 Foot Depth	$ _____/L.F.	$ _____
b.	50	L.F.	8.1 - 16.0 Foot Depth	$ _____/L.F.	$ _____
c.	60	L.F.	Installed in 24-inch Steel Casing	$ _____/L.F.	$ _____

ITEM 12 – FITTINGS

a.	40	Ton	Fittings	$ _____/TN	$ _____

ITEM 13 - FIRE HYDRANTS

a.	40	Each	Fire Hydrant Assembly	$ _____/EA	$ _____
b.	20	L.F.	Hydrant Extension	$ _____/L.F.	$ _____
c.	6	Each	Salvage Existing Hydrant	$ _____/EA	$ _____

ITEM 14 – VALVES

a.	5	Each	6-Inch Gate Valve	$ _____/EA	$ _____
b.	15	Each	8-Inch Gate Valve	$ _____/EA	$ _____
c.	5	Each	10-Inch Gate Valve	$ _____/EA	$ _____
d.	15	Each	12-Inch Gate Valve	$ _____/EA	$ _____
e.	2	Each	16-Inch Butterfly Valve	$ _____/EA	$ _____
f.	25	Each	Valve adjustments in Pavement (0-5')	$ _____/EA	$ _____
g.	15	Each	Valve adjustments in Pavement (5' or greater)	$ _____/EA	$ _____
h.	25	Each	Valve adjustments out of Pavement (0-5')	$ _____/EA	$ _____
i.	15	Each	Valve adjustments out of Pavement (5' or greater)	$ _____/EA	$ _____

ITEM 15 - CONNECTIONS TO EXISTING WATER LINES – TAPPING SLEEVE & VALVE

a.	5	Each	8 x 8 Tapping Sleeve & Valve	$ _____/EA	$ _____
b.	1	Each	10 x 8 Tapping Sleeve & Valve	$ _____/EA	$ _____
c.	1	Each	10 x 10 Tapping Sleeve & Valve	$ _____/EA	$ _____
d.	1	Each	12 x 8 Tapping Sleeve & Valve	$ _____/EA	$ _____
e.	1	Each	12 x 10 Tapping Sleeve & Valve	$ _____/EA	$ _____
f.	5	Each	12 x 12 Tapping Sleeve & Valve	$ _____/EA	$ _____
g.	1	Each	16 x 8 Tapping Sleeve & Valve	$ _____/EA	$ _____
h.	1	Each	16 x 10 Tapping Sleeve & Valve	$ _____/EA	$ _____
i.	1	Each	16 x 12 Tapping Sleeve & Valve	$ _____/EA	$ _____
j.	1	Each	16 x 16 Tapping Sleeve & Valve	$ _____/EA	$ _____

ITEM 16 - CONNECTIONS TO EXISTING WATER LINES – CUT IN CONNECTIONS

a.	10	Each	Cut In Connection on 8-Inch Line	$ _____/EA	$ _____

b.	10	Each	Cut In Connection on 10-Inch Line	$ _____/EA	$ _____
c.	10	Each	Cut In Connection on 12-Inch Line	$ _____/EA	$ _____
d.	2	Each	Cut In Connection on 16-Inch Line	$ _____/EA	$ _____

ITEM 17 - CONNECTIONS TO EXISTING WATER LINES – STRAIGHT CONNECTIONS

a.	10	Each	Straight Connection on 8-Inch Line	$ _____/EA	$ _____
b.	10	Each	Straight Connection on 10-Inch Line	$ _____/EA	$ _____
c.	10	Each	Straight Connection on 12-Inch Line	$ _____/EA	$ _____
d.	2	Each	Straight Connection on 16-Inch Line	$ _____/EA	$ _____

ITEM 18 - ABANDON EXISTING WATER MAIN

a.	5	Each	Cut and Plug / Deadman Restraint 1 ½ to 6-Inch Line	$ _____/EA	$ _____
b.	10	Each	Cut and Plug / Deadman Restraint 8 to 12-Inch Line	$ _____/EA	$ _____
c.	1	Each	Cut and Plug / Deadman Restraint 16-Inch Line	$ _____/EA	$ _____

ITEM 19 - WATER SERVICE CONNECTIONS

a.	50	Each	New Service Setup – Rome Type Box	$ _____/EA	$ _____
b.	50	Each	New Service Setup – Double Gulf Box	$ _____/EA	$ _____
c.	250	L.F.	New 1-Inch Service Line	$ _____/L.F.	$ _____
d.	25	L.F.	New 1-1/2-Inch Service Line	$ _____/L.F.	$ _____
e.	25	L.F.	New 2-Inch Service Line	$ _____/L.F.	$ _____

ITEM 20 - WATER SERVICE CHANGEOVERS

a.	100	Each	Changeover Setup	$ _____/EA	$ _____
b.	500	L.F.	Replace Existing with 1-Inch Service Line	$ _____/L.F.	$ _____
c.	50	L.F.	Replace Existing with 1-1/2-Inch Service Line	$ _____/L.F.	$ _____
d.	50	L.F.	Replace Existing with 2-Inch Service Line	$ _____/L.F.	$ _____
e.	10	Each	Water Meter Relocation	$ _____/EA	$ _____

ITEM 21 - 4 or 5-FOOT DIAMETER PRECAST VALVE VAULT OR MANHOLE

a.	30	V.F.	0.0 - 8.0 Foot Depth	$ _____/V.F.	$ _____
b.	10	V.F.	Greater than 8 Foot Depth	$ _____/V.F.	$ _____

ITEM 22 - BORE AND JACK CASING

a.	100	L.F.	16-Inch Steel Casing With 8-Inch DIP Carrier Pipe	$ _____/L.F.	$ _____
b.	100	L.F.	16-Inch Steel Casing With 10-Inch DIP Carrier Pipe	$ _____/L.F.	$ _____
c.	100	L.F.	18-Inch Steel Casing With 12-Inch DIP Carrier Pipe	$ _____/L.F.	$ _____
d.	50	L.F.	24-Inch Steel Casing With 16-Inch DIP Carrier Pipe	$ _____/L.F.	$ _____

ITEM 23 - STORM DRAIN PIPE

a.	20	L.F.	12-Inch RCP	$ _____/L.F.	$ _____
b.	20	L.F.	12-Inch CMP	$ _____/L.F.	$ _____
c.	20	L.F.	15-Inch RCP	$ _____/L.F.	$ _____
d.	20	L.F.	15-Inch CMP	$ _____/L.F.	$ _____
e.	20	L.F.	18-Inch RCP	$ _____/L.F.	$ _____
f.	20	L.F.	18-Inch CMP	$ _____/L.F.	$ _____

ITEM 24 - EROSION AND SEDIMENTATION CONTROL

a.	5	Each	Construction Exits	$ _____/EA	$ _____
b.	3,000	L.F.	Reinforced Silt Fence (Type C)	$ _____/L.F.	$ _____
c.	300	Each	Hay Bale Check Dams	$ _____/EA	$ _____
d.	20	Each	Stone Check Dams	$ _____/EA	$ _____
e.	20	Each	Inlet Sediment Traps	$ _____/EA	$ _____
f.	100	Each	Pigs-in-a-Blanket	$ _____/EA	$ _____
g.	50	S.Y.	Type 1 Rip Rap with Filter Fabric Underlay	$ _____/S.Y.	$ _____
h.	50	S.Y.	Type 3 Rip Rap with Filter Fabric Underlay	$ _____/S.Y.	$ _____
i.	1	Each	Box Gabion (Surge Stone Fill with Filter Fabric Underlay) - 3' x 3' x 6' Baskets	$ _____/EA	$ _____
j.	1,000	L.F.	Tree Protection Fence	$ _____/L.F.	$ _____

ITEM 25 - VEGETATION RESTORATION

a.	3,000	S.Y.	Temporary Seeding (All Types)	$ _____/S.Y.	$ _____
b.	3,000	S.Y.	Permanent Seeding (All Types)	$ _____/S.Y.	$ _____
c.	1,000	S.Y.	Sod Grassing (All Types)	$ _____/S.Y.	$ _____
d.	1,000	S.Y.	Hydroseeding	$ _____/S.Y.	$ _____

ITEM 26 - TEMPORARY STREAM CROSSING - FOR CONTRACTOR ACCESS

a.	1	Each	Up To 15-Feet From Top of Bank to Top of Bank	$ _____/EA	$ _____
b.	1	Each	15 to 25-Feet From Top of Bank to Top of Bank	$ _____/EA	$ _____
c.	1	Each	25 to 40-Feet From Top of Bank to Top of Bank	$ _____/EA	$ _____
d.	1	Each	Over 40-Feet From Top of Bank to Top of Bank	$ _____/EA	$ _____

ITEM 27 - TEMPORARY STREAM CROSSING - PIPELINE CROSSES STREAM

a.	1	Each	Up To 15-Feet From Top of Bank to Top of Bank	$ _____/EA	$ _____
b.	1	Each	15 to 25-Feet From Top of Bank to Top of Bank	$ _____/EA	$ _____
c.	1	Each	25 to 40-Feet From Top of Bank to Top of Bank	$ _____/EA	$ _____
d.	1	Each	Over 40-Feet From Top of Bank to Top of Bank	$ _____/EA	$ _____

ITEM 28 - TRENCH EXCAVATION AND STABILIZATION – AS ORDERED BY THE ENGINEER

a.	500	C.Y.	Trench Stabilization With Suitable Earth Materials	$ _____/C.Y.	$ _____
b.	300	C.Y.	Trench Stabilization With Crusher Run	$ _____/C.Y.	$ _____
c.	500	C.Y.	Trench Stabilization With Crushed Stone (#57)	$ _____/C.Y.	$ _____
d.	50	C.Y.	Trench Stabilization With M-10 Sand	$ _____/C.Y.	$ _____
e.	250	C.Y.	Trench Rock Excavation and Removal – Base Cost	$ 40.00 / C.Y.	$ _____
f.	250	C.Y.	Trench Rock Excavation and Removal – Premium Cost	$ _____/C.Y.	$ _____

ITEM 29 - EASEMENT CLEARING AND GRUBBING

a.	200	L.F.	Clear 20-Foot Wide Easement - Light	$ _____/L.F.	$ _____
b.	200	L.F.	Clear 20-Foot Wide Easement - Medium	$ _____/L.F.	$ _____
c.	100	L.F.	Clear 20-Foot Wide Easement - Heavy	$ _____/L.F.	$ _____

ITEM 30 - DRIVEWAY AND ROAD REPAIR AND REPLACEMENT

a.	50	S.Y.	Gravel Driveway Replacement	$ _____/S.Y.	$ _____
b.	60	S.Y.	Asphalt Driveway Replacement	$ _____/S.Y.	$ _____
c.	100	S.Y.	Concrete Driveway Replacement – Residential	$ _____/S.Y.	$ _____
d.	100	S.Y.	Concrete Driveway Replacement - Commercial	$ _____/S.Y.	$ _____
e.	400	S.Y.	Concrete Sidewalk	$ _____/S.Y.	$ _____
f.	200	L.F.	Concrete Curb and Gutter	$ _____/L.F.	$ _____
g.	100	L.F.	Granite Curb	$ _____/L.F.	$ _____
h.	200	S.Y.	Asphalt Pavement Removal and Replacement (Type A Cut Repair)	$ _____/S.Y.	$ _____
i.	1,000	S.Y.	Complete Fulton County Standard Utility Cut (Type C Cut Repair)	$ _____/S.Y.	$ _____
j.	3,000	S.Y.	Road Surface Milling	$ _____/S.Y.	$ _____
k.	3,000	S.Y.	Road Surface Overlay	$ _____/S.Y.	$ _____

ITEM 31 - PAVEMENT MARKING AND STRIPING

a.	10	L.F.	4- or 5-Inch Std. DOT Striping - Thermoplastic	$ _____/L.F.	$ _____
b.	10	L.F.	4- or 5-Inch Std. DOT Striping - Paint	$ _____/L.F.	$ _____
c.	10	L.F.	Std. DOT Stop Bar - Thermoplastic	$ _____/L.F.	$ _____
d.	10	L.F.	Std. DOT Stop Bar - Paint	$ _____/L.F.	$ _____

ITEM 32 - TRAFFIC CONTROL

a.	100	L.F.	Std. DOT Concrete Barrier	$ _____/L.F.	$ _____
b.	20	Each/Day	MUTCD Std. Safety Barrel	$ ____/EA/DY	$ _____
c.	80	Hours	Police Cruiser	$ _____/HR	$ _____
d.	80	Hours	Certified Flagman	$ _____/HR	$ _____
e.	80	Hours	Light Plant	$ _____/HR	$ _____
f.	10	Days	Electronic Message Board	$ ____/DY	$ _____

ITEM 33 - REMOVE AND REPLACE EXISTING FENCE

a.	20	L.F.	4-Foot High Chain Link	$ _____/L.F.	$ _____
b.	20	L.F.	6-Foot High Chain Link	$ _____/L.F.	$ _____
c.	20	L.F.	6-Foot High Wood	$ _____/L.F.	$ _____

ITEM 34 - CAST IN PLACE CONCRETE

a.	40	C.Y.	Structural Concrete	$ _____/C.Y.	$ _____
b.	40	C.Y.	Concrete Thrust Collars on 6- to 12-Inch Pipe	$ _____/C.Y.	$ _____
c.	40	C.Y.	Concrete Thrust Collars on 16- to 24-Inch Pipe	$ _____/C.Y.	$ _____
d.	80	C.Y.	Concrete Thrust Blocking and/or Encasement	$ _____/C.Y.	$ _____
e.	1	Ton	Reinforcing Steel	$ _____/TN	$ _____

ITEM 35 - PROGRAMMABLE ELECTRONIC MARKING DEVICES

a.	300	Each	Line Marker Balls - 3M 1423-XR-ID	$ _____/EA	$ _____

ITEM 36 - UTILITY LOCATION – EXCAVATION AND BACKFILL

a.	60	Hours	Soft Dig Hydro Excavation	$ _____/HR	$ _____
b.	200	C.Y.	Exploratory Excavation	$ _____/C.Y.	$ _____

ITEM 37 – WATER LINE MAINTENANCE SIGN

a.	10	Each	Water Line Maintenance Sign	$ _____/EA	$ _____

ITEM 38 - CASH ALLOWANCES

a.	Soils, Concrete, Asphalt, Materials, and Water Quality Testing	$ 20,000.00
b.	Utility Conflict Resolution	$ 20,000.00
c.	Large Tree Removal (18-Inch Diameter and Above)	$ 20,000.00
d.	Preblast Survey/Inspection and Blasting Monitoring	$ 20,000.00

ITEM 39 – EMERGENCY SERVICES - AS DIRECTED BY ENGINEER\CONSTRUCTION MANAGER

The following labor and equipment are included for when the County needs manpower or additional equipment to assist in making emergency repairs other than those specified above as unit price items. Hourly rate items below shall **NOT** apply when work is performed under non-emergency conditions. The Notice to Proceed for each project will indicate emergency or non-emergency project status.

a.	40	Hours	Water Superintendent with Pickup Truck	$ _____/HR	$ _____
b.	40	Hours	Water Crew Truck - Fully Equipped with tools and repair parts including but not limited to pipe saw, wacker-packer, chain saw, and miscellaneous hand tools, including water foreman and three laborers.	$ _____/HR	$ _____
c.	40	Hours	Rubber Tired Front End Loader With Trailer and Operator	$ _____/HR	$ _____
d.	40	Hours	Rubber Tired Backhoe With Trailer and Operator	$ _____/HR	$ _____
e.	40	Hours	Excavator With Trailer and Operator	$ _____/HR	$ _____
f.	40	Hours	Trench Compactor With Operator	$ _____/HR	$ _____
g.	40	Hours	Mobile Air Compressor With Hoses and Air Tools (Jackhammer, Pavement Breaker, Clay Spade, etc.)	$ _____/HR	$ _____

The Bidder agrees hereby to commence work under this Contract, with adequate personnel and equipment, on a date to be specified in a written order of the Contracting Officer and to fully complete all work under this Contract within the agreed upon days specified in a written Notice To Proceed for each project.

The Bidder declares that he understands that the quantities shown for the unit prices items are subject to either increase or decrease, and that should the quantities of any of the items of work be increased, the Bidder proposes to do the additional work at the unit prices stated herein; and should the quantities be decreased, the Bidder also understands that payment will be made on the basis of actual quantities at the unit price bid and will make no claim for anticipated profits for any decrease in quantities; and that actual quantities will be determined upon completion of work, at which time adjustments will be made to the contract amount by direct increase or decrease.

Fulton County reserves the right to award this contract to one or more qualified vendors. The amount of each contract that is issued will be a portion of the overall bid total based on available funding.

In case of discrepancies between the figures shown in the unit prices and the totals, the unit prices shall apply and the totals shall be corrected to agree with the unit prices. In case of discrepancies between written amounts and figures, written amounts shall take precedence over figures and the sum of all Bid extensions (of unit prices) plus lump sum items shall take precedence over BID TOTAL.

The Bidder furthermore agrees that, in the case of a failure on his part to execute the Contract Agreement and Bonds within ten (10) days after receipt of conformed contract documents for execution, the Bid Bond accompanying his bid and the monies payable thereon shall be paid into the funds of the Owner as liquidated damages for such failure.

Enclosed is a Bid Bond in the approved form, in the sum of:_____

_____Dollars

($_____) according to the conditions of “Instructions to Bidders” and provisions thereof.

The undersigned acknowledges receipt of the following addenda (list by the number and date appearing on each addendum) and thereby affirms that its Bid considers and incorporates any modifications to the originally issued Bidding Documents included therein.

ADDENDUM # _____DATED _____

ADDENDUM # _____DATED _____

ADDENDUM # _____DATED _____

ADDENDUM # _____DATED _____

BIDDER: _____

By: _____
[Name Typed or Printed]

_____
[Name Signed]

Title: _____

Business Address: _____

_____

_____

Business Phone: _____

Bidder's Contractor License No: _____
[State/County]

License Expiration Date: _____

Note: If the Bidder is a corporation, the Bid shall be signed by an officer of the corporation; if a partnership, it shall be signed by a partner. If signed by others, authority for signature shall be attached.

The full name and addresses of persons or parties interested in the foregoing Bid, as principals, are as follows:

Name	Address

The Bidder shall list below work he has done of similar nature to this bid as references that will afford the Owner opportunity to judge the Bidder's experience and skill.

PROJECT NAME AND OWNER	OWNERS REPRESENTATIVE	PHONE	E-MAIL

END OF SECTION

BID BOND

No bid for a contract in Fulton County for work to be done shall be valid for any purpose unless the Contractor shall give a Bid Bond with good and sufficient surety payable to, in favor of, and for the protection of Fulton County. The Bid Bond shall not be less than 5% of the total amount payable by the terms of the Contract. No bid shall be read aloud or considered if a proper bid bond has not been submitted.

Surety companies executing Bonds must appear on the Treasury Department's most current list (Circular 570 as amended) and be authorized to transact business in the State of Georgia.

Attestation for the corporation must be by the corporate officer; for a partnership by another partner; for an individual by a notary with the corporate seal.

BID BOND

2014 STANDBY MISCELLANEOUS CONSTRUCTION – WATER SYSTEM SERVICES
FULTON COUNTY GOVERNMENT

KNOW ALL MEN BY THESE PRESENTS, THAT WE_____

_____

hereinafter called the PRINCIPAL, and _____

_____

hereinafter call the SURETY, a corporation chartered and existing under the laws of the State of _____and duly authorized to transact Surety business in the State of Georgia, are held and firmly bound unto the Fulton County Government (COUNTY), in the penal sum of _____ _____Dollars and Cents ($_____) good and lawful money of the United States of America, to be paid upon demand of the COUNTY, to which payment well and truly to be made we bind ourselves, our heirs, executors, and administrators and assigns, jointly and severally and firmly by these presents.

WHEREAS the PRINCIPAL has submitted to the COUNTY, for **2014 STANDBY MISCELLANEOUS CONSTRUCTION – WATER SYSTEM SERVICES,** a Bid;

WHEREAS the PRINCIPAL desires to file this Bond in accordance with law:

NOW THEREFORE: The conditions of this obligation are such that if the Bid be accepted, the PRINCIPAL shall within ten (10) calendar days after receipt of written notification from the COUNTY of the award of the Contract execute the Contract in accordance with the Bid and upon the terms, conditions and prices set forth therein, in the form and manner required by the COUNTY, and execute sufficient and satisfactory Performance and Payments Bonds payable to the COUNTY, each in the amount of one hundred percent (100%) of the total contract price, in form and with security satisfactory to said COUNTY, then this obligation to be void; otherwise, to be and remain in full force and virtue in law; and the SURETY shall upon failure of the PRINCIPAL to comply with any or all of the foregoing requirements within the time specified above immediately pay to the COUNTY, upon demand the amount hereof in good and lawful money of the United States of America, not as a penalty, but as liquidated damages.

In the event suit is brought upon this Bond by the COUNTY and judgment is recovered, the SURETY shall pay all costs incurred by the COUNTY in such suit, including attorney's fees to be fixed by the Court.

Enclosed is a Bid Bond in the approved form, in the amount of _____
_____Dollars
($_____) being in the amount of five percent (5%) of the Contract Sum. The money payable on this bond shall be paid to the COUNTY, for the failure of the Bidder to execute a Contract within ten (10) days after receipt of the Contract and at the same time furnish a Payment Bond and Performance Bond.

(SIGNATURES ON NEXT PAGE)

IN TESTIMONY THEREOF, the PRINCIPAL and SURETY have caused these presents to be duly signed and sealed this _____day of _____, 20__

ATTEST:

_____
PRINCIPAL

_____ BY_____

(SEAL)

CERTIFICATE AS TO CORPORATE PRINCIPAL

I, _____, certify that I am the Secretary of the Corporation named as principal in the within bond; that _____, who signed the said bond of said corporation; that I know this signature, and his/her signature thereto is genuine; and that said bond was duly signed, sealed and attested for in behalf of said Corporation by authority of its governing body.

_____
SECRETARY

(CORPORATE SEAL)

_____
SURETY

_____ BY_____
(SEAL)

END OF SECTION

PAYMENT BOND

No Contract with Fulton County for work to be done shall be valid for any purpose unless the Contractor provides a Payment Bond with good and sufficient surety payable to Fulton County for the use and protection of all sub-contractors and all persons supplying labor, materials, machinery, and equipment in the prosecution of the work provided for in the Contract. The Payment Bond shall be in the amount of 100% of the total contract amount, payable by the terms of the Contract, and shall be written on the following form.

Surety companies executing Bonds must appear on the Treasury Department's most current list (Circular 570 as amended) and be authorized to transact business in the State of Georgia.

Attestation for the corporation must be by the corporate officer; for a partnership by another partner; for an individual by a notary with the corporate seal.

PAYMENT BOND

KNOW ALL MEN BY THESE PRESENTS that ***[insert name of contractor]*** (hereinafter called the "Principal") and ***[insert name of surety]*** (hereinafter called the "Surety"), are held and firmly bound unto **FULTON COUNTY**, a political subdivision of the State of Georgia (hereinafter called the "Owner"), its successors and assigns as obligee, in the penal sum of [100% of contract amount], lawful money of the United States of America, for the payment of which the Principal and the Surety bind themselves, their administrators, executors, successors and assigns, jointly and severally, firmly by these presents.

WHEREAS, the Principal has entered, or is about to enter, into a certain written contract with the Owner, dated [insert date of contract], which is incorporated herein by reference in its entirety (hereinafter called the "Contract"), for construction-type services of a project known as [insert name of project], as more particularly described in the Contract (hereinafter called the "Project");

NOW, THEREFORE, the condition of this obligation is such that if the Principal shall promptly make payment to all persons working on or supplying labor or materials under the Contract, and any amendments thereto, with regard to labor or materials furnished and used in the Project, and with regard to labor or materials furnished but not so used, then this obligation shall be void; but otherwise it shall remain in full force and effect.

1. A "Claimant' shall be defined herein as any subcontractor, person, party, partnership, corporation or the entity furnishing labor, services or materials used, or reasonably required for use, in the performance of the Contract, without regard to whether such labor, services or materials were sold, leased or rented, and without regard to whether such Claimant is or is not in privity of contract with the Principal or any subcontractor performing work on the Project, including, but not limited to, the following labor, services, or materials: water, gas, power, light, heat, oil, gasoline, telephone service or rental of equipment directly applicable to the Contract.

2. In the event a Claimant files a lien against the property of the Owner, and the Principal fails or refuses to satisfy or remove it promptly, the Surety shall satisfy or remove the lien promptly upon written notice from the Owner, either by bond or as otherwise provided in the Contract.

3. The Surety hereby waives notice of any and all modifications, omissions, additions, changes, alterations, extensions of time, changes in the payment terms, and any other amendments in or about the Contract and agrees that the obligations undertaken by this Bond shall not be impaired in any manner by reason of any such modifications, omissions, additions, changes, alterations, extensions of time, changes in payment terms, and amendments.

4. The Surety hereby agrees that this Bond shall be deemed amended automatically and immediately, without formal or separate amendments hereto, upon any amendment or modifications to the Contract, so as to bind the Principal and Surety, jointly and severally, to the full payment of any Claimant under the Contract, as amended or modified, provided only that the Surety shall not be liable for more than the penal sum of the Bond, as specified in the first paragraph hereof.

5. This Bond is made for the use and benefit of all persons, firms, and corporations who or which may furnish any materials or perform any labor for or on account of the construction-type services to be performed or supplied under the Contract, and any amendments thereto, and they and each of them may sue hereon.

6. No action may be maintained on this Bond after one (1) year from the date the last services, labor, or materials were provided under the Contract by the Claimant prosecuting said action.

7. This Bond is intended to comply with O.C.G.A. Section 13-10-1, and shall be interpreted so as to comply with the minimum requirements thereof. However, in the event the express language of this Bond extends protection to the Owner beyond that contemplated by O.C.G.A. Section 13-10-1, or any other statutory law applicable to this Project, then the additional protection shall be enforced in favor of the Owner, whether or not such protection is found in the applicable statutes. **IN WITNESS WHEREOF,** the Principal and Surety have hereunto affixed their corporate seals and caused this obligations to be signed by their duly authorized representatives this _____of _____, _____.

_____(SEAL)
(Principal)

By:_____

Attest:

_____
Secretary

_____(SEAL)
(Surety)

By: _____

Attest:

_____
Secretary

_____
(Address of Surety's Home Office)

_____
(Resident Agent of Surety)

PERFORMANCE BOND

No contract with Fulton County for work to be done shall be valid for any purpose unless the Contractor provides a Performance Bond with good and sufficient surety payable to, in favor of, and for the protection of Fulton County. The Performance Bond shall be in the amount of 100% of the total contract amount, payable by the terms of the Contract, and shall be written on the following form.

Surety companies executing Bonds must appear on the Treasury Department's most current list (Circular 570 as amended) and be authorized to transact business as a surety in Georgia.

Attestation for the corporation must be by the corporate officer; for a partnership by another partner; for an individual by a notary with the corporate seal.

PERFORMANCE BOND

KNOW ALL MEN BY THESE PRESENTS that _____
(Insert name of Contractor)
(hereinafter called the "Principal") and _____(hereinafter called the
(Insert name of Surety)
"Surety"), are held and firmly bound unto **FULTON COUNTY**, a political subdivision of the State of Georgia (hereinafter called the "Owner"), its successors and assigns, in the penal sum of _____*[100% of Contract amount]*, lawful money of the United States of America, for the payment of which the Principal and the Surety bind themselves, their administrators, executors, successors and assigns, jointly and severally, firmly by these presents.

WHEREAS, the Principal has entered, or is about to enter, into a certain written contract with the Owner, dated _____, which is incorporated herein by reference in its entirety (hereinafter called the "Contract"), for construction-type services of a project known as **14ITB0356K-NH 2014 Standby Miscellaneous Construction – Water System Services** as more particularly described in the Contract (hereinafter called the "Project");

NOW, THEREFORE, the conditions of this obligation are as follows, that if the Principal shall fully and completely perform all the undertakings, covenants, terms, conditions, warranties, and guarantees contained in the Contract, including all modifications, amendments, changes, deletions, additions, and alterations thereto that may hereafter be made, then this obligation shall be void; otherwise it shall remain in full force and effect.

Whenever the Principal shall be, and declared by the Owner to be, in default under the Construction-Type Contract, the Surety shall promptly remedy the default as follows:

1. Complete the Contract in accordance with its terms and conditions; or, at the sole option of the Owner,

2. Obtain a bid or bids for completing the Contract in accordance with its terms and conditions, and upon determination by the Surety and the Owner of the lowest responsible bidder, arrange for a contract between such bidder and Owner and make available as the work progresses (even though there should be a default or succession of defaults under the Contract or contracts of completion arranged under this paragraph) sufficient funds to pay the cost of completion less the balance of the contract price; but not exceeding, including other costs and damages for which the Surety may be liable hereunder, the penal sum set forth in the first paragraph hereof, as may be adjusted, and the Surety shall make available and pay to the Owner the funds required by this Paragraph prior to the payment of the Owner of the balance of the contract price, or any portion thereof. The term "balance of the contract price," as used in this paragraph, shall mean the total amount payable by the Owner to the Contractor under the Contract, and any amendments thereto, less the amount paid by the Owner to the Contractor; or, at the sole option of the Owner,

3. Allow Owner to complete the work and reimburse the Owner for all reasonable costs incurred in completing the work.

In addition to performing as required in the above paragraphs, the Surety shall indemnify and hold harmless the Owner from any and all losses, liability and damages, claims, judgments, liens, costs and fees of every description, including reasonable attorney's fees, litigation costs and expert witness fees, which the Owner may incur, sustain or suffer by reason of the failure or default on the part of the Principal in the performance of any or all of the terms, provisions, and requirements of the Contract, including any and all amendments and modifications thereto, or

incurred by the Owner in making good any such failure of performance on the part of the Principal.

The Surety shall commence performance of its obligations and undertakings under this Bond promptly and without delay, after written notice from the Owner to the Surety.

The Surety hereby waives notice of any and all modifications, omissions, additions, changes, alterations, extensions of time, changes in payment terms, and any other amendments in or about the Contract, and agrees that the obligations undertaken by this Bond shall not be impaired in any manner by reason of any such modifications, omissions, additions, changes, alterations, extensions of time, change in payment terms, and amendments.

The Surety hereby agrees that this Bond shall be deemed amended automatically and immediately, without formal or separate amendments hereto, upon any amendment to the Contract, so as to bind the Principal and the Surety to the full and faithful performance of the Contract as so amended or modified, and so as to increase the penal sum to the adjusted Contract Price of the Contract.

No right of action shall accrue on this Bond to or for the use of any person, entity or corporation other than the Owner and any other obligee named herein, or their executors, administrators, successors or assigns.

This Bond is intended to comply with O.C.G.A. Section 36-91-1 et seq., and shall be interpreted so; as to comply with; the minimum requirements thereof. However, in the event the express language of this Bond extends protection to; the Owner beyond that contemplated by O.C.G.A. Section 36-91-1 et seq. and O.C.G.A. Section 13-10-1, as amended, or any other statutory law applicable to this Project, then the additional protection shall be enforced in favor of the Owner, whether or not such protection is found in the applicable statutes.

IN WITNESS WHEREOF the undersigned have caused this instrument to be executed and their respective corporate seals to be affixed and attested by their duly authorized representatives this _____ day of _____, _____.

_____(SEAL)
(Principal)

By_____

Attest:

_____
Secretary

_____(SEAL)
(Surety)

By:_____

Attest:

_____
Secretary

_____

(Address of Surety's Home Office)

_____
(Resident Agent of Surety)

END OF SECTION

SECTION 4

SCOPE OF WORK AND TECHNICAL SPECIFICATIONS

The Project consists of the following major elements: providing all labor, equipment and materials necessary for the construction, installation, and emergency repair of miscellaneous water mains, waste water service lines, and other required improvements to the Water collection system within Fulton County. The work includes providing an emergency water main repair crew on an as needed basis. All work shall be in conformance with the contract documents, drawings and Fulton County Standards and Specifications. This is a miscellaneous standby contract; the location of the work will be in various locations throughout Fulton County.

The County's water distribution system includes all water north of the Chattahoochee River in North Fulton with the exception of Mountain Park and a portion of Roswell. The water system serves approximately 76,000 residential and commercial customers. The Department of Water Resources maintains over 1050 miles of water main, 21,000 valves, and 12,000 fire hydrants.

Contractor must list projects demonstrating: a) a minimum of 10,000 feet of work on water mains; b) a minimum of 3 years of past history doing work and emergency repairs on a municipal water system.

SECTION 5

INSURANCE AND RISK MANAGEMENT PROVISIONS

Insurance and Risk Management Provisions
Standby Misc. Construction – Water System Services

It is Fulton County Government's practice to obtain Certificates of Insurance from our Contractors and Vendors. Insurance must be written by a licensed agent in a company licensed to write insurance in the State of Georgia, with an A.M. Best rating of at least A-VI, subject to final approval by Fulton County. Respondents shall submit with the bid/proposal evidence of insurability satisfactory to Fulton County Government as to form and content. Either of the following forms of evidence is acceptable:

- A letter from an insurance carrier stating that upon your firm/company being the successful Bidder/Respondent that a Certificate of Insurance shall be issued in compliance with the Insurance and Risk Management Provisions outlined below.
- A Certificate of Insurance complying with the Insurance and Risk Management Provisions outlined below (Request for Bid/Proposal number and Project Name, Number and Description must appear on the Certificate of Insurance).
- A combination of a specific policy written with an umbrella policy covering liabilities in excess of the required limits is acceptable to achieve the applicable insurance coverage levels.

Upon award, the Contractor/Vendor must maintain at their expense, insurance with policy limits equal to or greater than the limits described below. Proof of insurance must be provided to Fulton County Government prior to the start of any activities/construction as described in the bid document(s). Any and all Insurance Coverage(s) and Bonds required under the terms and conditions of the contract shall be maintained during the entire length of the contract, including any extensions or renewals thereto, and until all work has been completed to the satisfaction of Fulton County Government.

Accordingly the Respondent shall provide a certificate evidencing the following:

1. **WORKERS COMPENSATION/EMPLOYER'S LIABILITY INSURANCE – STATUTORY (In compliance with the Georgia Workers Compensation Acts, including but not limited to U.S. Longshoremen and Harbor Workers Act and any other State or Federal Acts or Provisions in which jurisdiction may be granted)**

Employer's Liability Insurance	BY ACCIDENT	EACH ACCIDENT	$1,000,000
Employer's Liability Insurance	BY DISEASE	POLICY LIMIT	$1,000,000
Employer's Liability Insurance	BY DISEASE	EACH EMPLOYEE	$1,000,000

2. **COMMERCIAL GENERAL LIABILITY INSURANCE (Including contractual Liability Insurance)**

Bodily Injury and Property Damage Liability	Each Occurrence	$1,000,000
(Other than Products/Completed Operations)	General Aggregate	$2,000,000
Products\Completed Operation	Aggregate Limit	$2,000,000
Personal and Advertising Injury	Limits	$1,000,000
Damage to Rented Premises	Limits	$ 100,000

3. **BUSINESS AUTOMOBILE LIABILITY INSURANCE**
   Combined Single Limits Each Occurrence $1,000,000
   (Including operation of non-owned, owned, and hired automobiles).

4. **UMBRELLA LIABILITY** Per Occurrence/Aggregate $2,000,000/$2,000,000

5. **CONTRACTORS POLLUTION LIABILITY**
   Each Occurrence $1,000,000
   *Or by endorsement to General Liability Policy for sudden and accidental
   If Pollution provided by General Liability Endorsement and sudden and accidental, Completed
   Operations would not be a requirement.

Certificates of Insurance

Certificates shall state that the policy or policies shall not expire, be cancelled or altered without at least thirty (30) days prior written notice to Fulton County Government. Policies and Certificates of Insurance are to list Fulton County Government as an Additional Insured (except for Workers' Compensation) and shall conform to all terms and conditions (including coverage of the indemnification and hold harmless agreement) contained in the Insurance and Risk Management Provisions. The General Liability Additional Insured language should apply to on-going and completed-operations, using ISO form CG 2010 (11/85 version), its' equivalent or on a blanket basis.

If Fulton County Government shall so request, the Respondent, Contractor or Vendor will furnish the County for its inspection and approval such policies of insurance with all endorsements, or confirmed specimens thereof certified by the insurance company to be true and correct copies.

The Contractor agrees to name the Owner and all other parties required of the Contractor/Vendor shall be included as additional insureds on the CGL, using ISO Additional Insured Endorsement forms CG 2010 11/85 or its equivalent coverage to the additional insureds. It shall apply as Primary Insurance before any other insurance or self-insurance, including any deductible, non-contributory, and Waiver of Subrogation provided in favor of Fulton County.

Additional Insured under the General Liability, Auto Liability, Umbrella Policies (with exception of Workers Compensation and Professional Liability), with no Cross Suits exclusion.

Important:
It is understood that **Insurance in no way Limits the Liability of the Contractor/Vendor.**

USE OF PREMISES

Contractor/Vendor shall confine its apparatus, the storage of materials and the operations of its workers to limits/requirements indicated by law, ordinance, permits and any restrictions of Fulton County Government and shall not unreasonably encumber the premises with its materials.

PROTECTION OF PROPERTY

Contractor/Vendor will adequately protect its own work from damage, will protect Fulton County Government's property from damage or loss and will take all necessary precautions during the progress of the work to protect all persons and the property of others from damage or loss.

Contractor/Vendor shall take all necessary precautions for the safety of employees of the work and shall comply with all applicable provisions of the Federal, State and local safety laws and building codes to prevent accidents or injury to persons on, about, or adjacent to the premises where work is being performed.

Contractor/Vendor shall erect and properly maintain at all times as required by the conditions and progress of the work, all necessary safeguards for the protection of its employees, Fulton County Government employees and the public and shall post all applicable signage and other warning devices t protect against potential hazards for the work being performed.

INDEMNIFICATION AND HOLD HARMLESS AGREEMENT

Consultant/Contractor hereby agrees to indemnify and hold harmless Fulton County, its Commissioners and their respective officers, members, employees, and agents (each, hereinafter referred to as an "Indemnified Person") from and against any and all claims, demands, liabilities, losses, costs or expenses, including attorneys' fees due to liability to a third party or parties, for any loss due to bodily injury (including death), personal injury, and property damage arising out of or resulting from the performance of this Agreement or any act or omission on the part of the Consultant/Contractor, its agents, employees or others working at the direction of Consultant/Contractor or on its behalf, or due to any breach of this Agreement by the Consultant/Contractor or due to the application or violation of any pertinent Federal, State or local law, rule or regulation. This indemnification is binding upon to the successors and assigns of Consultant/Contractor. This indemnification does not extend to the sole negligence of the Indemnified Persons

nor beyond the scope of this Agreement and the work undertaken thereunder. This indemnification survives the termination of this Agreement and shall also survive the dissolution or to the extent allowed by law, the bankruptcy of Consultant/Contractor.

CONTRACTOR/VENDOR ACKNOWLEDGES HAVING READ, UNDERSTANDING, AND AGREEING TO COMPLY WITH THIS INDEMNIFICATION AND HOLD HARMLESS AGREEMENT, AND THE REPRESENTATIVE OF THE CONTRACTOR/VENDOR IDENTIFIED BELOW IS AUTHORIZED TO SIGN CONTRACTS ON BEHALF OF THE RESPONDING CONTRACTOR/VENDOR.

COMPANY: _____ SIGNATURE: _____

NAME: _____TITLE: _____

DATE: _____

PURCHASING FORMS & INSTRUCTIONS

This section contains the procurement forms that are required to be executed and submitted with the bid package. This section does not contain all forms required to be included with the bid package submittal.

To be deemed responsive to this ITB, Bidders must provide the information requested and complete in detail all Purchasing Forms. The appropriate individual(s) authorized to commit the Bidder to the Project must sign the Purchasing Forms. Bidders should reproduce each Purchasing Form, as required, and complete the appropriate portions of the forms provided in this section.

- Form A: Non-Collusion Affidavit of Prime Bidder/Offeror
- Form B: Certificate of Acceptance of Request for Bid/Proposal Requirements
- Form C: Professional License Certifications ***(not applicable)***
    - Form C1 – Georgia Utility License Contractor License
    - Form C2 – Georgia General Contractors License
    - Form C3 – Georgia Professional License
- Form D: Certification Regarding Debarment
- Form E: Disclosure Form and Questionnaire
- Form F: Georgia Security and Immigration Contractor Affidavit and Agreement
- Form G: Georgia Security and Immigration Subcontractor Affidavit

FORM A: NON-COLLUSION AFFIDAVIT OF BIDDER/OFFEROR

STATE OF GEORGIA

COUNTY OF FULTON

I, _____ certify that pursuant to Fulton County Code Section 102-397, this bid or proposal is made without prior understanding, agreement or connection with any corporation, firm or person submitting a bid for the same work, labor or service to be done or the supplies, materials or equipment to be furnished and is in all respects fair and without collusion or fraud. I understand collusive bidding is a violation of state and federal law and can result in fines, prison sentences and civil damages awards. I agree to abide by all conditions of this bid or proposal and certify that I am authorized to sign this bid or proposal for the bidder.

Affiant further states that pursuant to O.C.G.A. Section 36-91-21 (d) and (e), _____ has not, by itself or with others, directly or indirectly, prevented or attempted to prevent competition in such bidding or proposals by any means whatsoever. Affiant further states that (s)he has not prevented or endeavored to prevent anyone from making a bid or offer on the project by any means whatever, nor has Affiant caused or induced another to withdraw a bid or offer for the work.

Affiant further states that the said offer of _____ is bona fide, and that no one has gone to any supplier and attempted to get such person or company to furnish the materials to the bidder only, or if furnished to any other bidder, that the material shall be at a higher price.

_____
(COMPANY NAME)

_____
(PRESIDENT/VICE PRESIDENT)

Sworn to and subscribed before me this _____ day of _____, 2014.

_____
(SECRETARY/ASSISTANT SECRETARY)

(Affix corporate seal here, if a corporation)

Notary Public: _____

County: _____

Commission Expires: _____

NOTE:

IF THE OFFEROR IS A PARTNERSHIP, ALL OF THE PARTNERS AND ANY OFFICER, AGENT, OR OTHER PERSON WHO MAY HAVE REPRESENTED OR ACTED FOR THEM IN BIDDING FOR OR PROCURING THE CONTRACT SHALL ALSO MAKE THIS OATH.

IF THE OFFEROR IS A CORPORATION, ALL OFFICERS, AGENTS, OR OTHER PERSONS WHO MAY HAVE ACTED FOR OR REPRESENTED THE CORPORATION IN BIDDING FOR OR PROCURING THE CONTRACT SHALL MAKE THE OATH.

FORM B: FULTON COUNTY CERTIFICATE OF ACCEPTANCE OF BID/PROPOSAL REQUIREMENTS

This is to certify that on this day, offeror acknowledges that he/she has read this solicitation document, pages #_____ to #_____ inclusive, including any addenda # _____ to #_____ exhibit(s) #_____ to #_____, attachment(s) # to #_____, and/or appendices #_____ to #,_____in its entirety, and agrees that no pages or parts of the document have been omitted, that he/she understands, accepts and agrees to fully comply with the requirements therein, and that the undersigned is authorized by the offeror to submit the proposal herein and to legally obligate the offeror thereto.

This is also to certify that the offeror has reviewed the form Fulton County contract included in the solicitation documents and agrees to be bound by its terms, or that the offeror certifies that it is submitting any proposed modification to the contract terms with its proposal. The offeror further certifies that the failure to submit proposed modifications with the proposal waives the offeror's right to submit proposed modifications later. The offeror also acknowledges that the indemnification and insurance provisions of Fulton County's contract included in the solicitation documents are non-negotiable and that proposed modifications to said terms may be reason to declare the offeror's proposal as non-responsive.

Company: _____

Signature: _____

Name: _____

Title: _____

Date: _____

(Corporate Seal)

FORM C1: CONTRACTOR'S GEORGIA UTILITY LICENSE CERTIFICATION

Contractor's Name: _____

Utility Contractor's Name: _____

Expiration Date of License: _____

I certify that the above information is true and correct and that the classification noted is applicable to the Bid for this Project.

Signed:
_____

Date:
_____

(ATTACH COPY OF LICENSE)

FORM C2: CONTRACTOR'S GEORGIA GENERAL CONTRACTOR'S LICENSE CERTIFICATION

Contractor's Name: _____

General Contractor's License Number: _____

Expiration Date of License: _____

I certify that the above information is true and correct and that the classification noted is applicable to the Bid for this Project.

Signed:
_____

Date:
_____

(ATTACH COPY OF LICENSE)

FORM C3: GEORGIA PROFESSIONAL LICENSE CERTIFICATION

NOTE: Please complete this form for the work your firm will perform on this project.

Contractor's Name: _____

Performing work as: Prime Contractor ____ Sub-Contractor _____

Professional License Type: _____

Professional License Number: _____

Expiration Date of License: _____

I certify that the above information is true and correct and that the classification noted is applicable to the Bid for this Project.

Signed:
_____

Date:
_____

(ATTACH COPY OF LICENSE)

FORM D: CERTIFICATION REGARDING DEBARMENT

(1) The Offeror certifies that neither it or its subcontractors is presently debarred, suspended, proposed for debarment, declared ineligible, or otherwise excluded from doing business with any government agency. Any such exclusion may cause prohibition of your firm from participating in any procurement by the Fulton County Government.

(2) If the Offeror is unable to certify to any of the statements in this certification, such Offeror or subcontractor shall attach an explanation to this bid or proposal.

INSTRUCTIONS FOR CERTIFICATION

By signing and submitting this certification, the Offeror is providing the certification set out below:

(1) The certification in this clause is a material representation of fact upon which reliance will be placed. If it is later determined that the prospective vendor knowingly rendered a false certification, the Purchasing Agent may pursue all available remedies, including suspension and/or debarment, for withdrawal of award or termination of a contract.

(2) The prospective Offeror shall provide immediate written notice to the Purchasing Agent if at anytime the Offeror learns that its certification was erroneous when submitted or has become erroneous by reason of changed circumstances.

(3) Offeror shall be under a continuing duty to immediately inform the Purchasing Agent in writing of any changes, if as a result of such changes, the Offeror certification regarding debarment is affected.

DEBARMENT ORDINANCE

The following Section 102-449 of Fulton County Code of Laws establishes the procedure for the debarment of contractors.

Authority to suspend.

After reasonable notice to the entity involved and reasonable opportunity for that entity to be heard, the Purchasing Agent, after consultation with user department, the County Manager and the County Attorney shall have the authority to suspend an entity for cause from consideration for award of county contracts. As used in this section, the term entity means any business entity, individual, firm, contractor, subcontractor or business corporation, partnership, limited liability corporation, firm, contractor, subcontractor or business structured; provided, further, that any such entity shall also be subject to suspension under this section if any of its constituents, members, subcontractors at any tier of such entity's and the entity, or any constituent or member, knew or should have known of the commission of the act. The suspension shall be for a period not to exceed three (3) years unless cause is based on a felony conviction for an offense related or associated with fraudulent contracting or misappropriation of funds wherein the suspension shall not exceed seven (7) years.

Causes for Suspension. The causes for suspension include:

(1) Conviction for commission of a criminal offense as an incident to obtain or attempting to obtain a public or private contract or subcontract, or in performance of such contract or subcontract;

(2) Conviction of state or federal statutes of embezzlement, theft, forgery, bribery, falsification or destruction of records, receiving stolen property or other offense indicating a lack of business integrity or business honesty which currently, seriously and directly affects responsibility as a county contractor.

(3) Conviction of state or federal anti-trust statues arising out of the solicitation and submission of bids and proposals;

(4) Violation of contract provisions, as set forth below, of a character which is regarded by the Purchasing Agent to be so serious as to justify suspension action:

a. Failure to perform in accordance with the specifications within a time limit provided in a county contract;

b. A recent record of failure to perform or unsatisfactory performance in accordance with the terms of one or more contracts; provided, that failure to perform or unsatisfactory performance caused by acts beyond the control of the contractor shall not be considered to be a basis for suspension;

c. Material representation of the composition of the ownership or workforce or business entity certified to the county as a minority business enterprise; or

d. Falsification of any documents.

(5) For violation of the ethical standards set forth in Fulton County Code Chapter 9, Code of Ethics.

(6) Knowing misrepresentation to the county, of the use which a majority owned contractor intends to make a minority business enterprise (a business entity at least 51 percent of which is owned and controlled by minority persons, as defined in Fulton County Code Section 102-431) as a subcontractor or a joint venture partner, in performing work under contract with the County.

Failure to fully and truthfully provide the information required, may result in the disqualification of your bid/proposal from consideration or termination of the Contract, once awarded. This document must be completed and included as a part of the bid/proposal package along with other required documents.

[SIGNATURES ON NEXT PAGE]

Under penalty of perjury, I declare that I have examined this certification and all attachments hereto, if applicable, to the best of my knowledge and belief, and all statements contained hereto are true, correct, and complete.

On this _____ day of _____, 20____

_____
(Legal Name of Offeror) (Date)

_____
(Signature of Authorized Representative) (Date)

_____
(Title)

FORM E: DISCLOSURE FORM AND QUESTIONNAIRE

1. Please provide the names and business addresses of each of the Offeror's firm's officers and directors.

   For the purposes of this form, the term "Offeror" means an entity that responds to a solicitation for a County contract by either submitting a proposal in response to a Request for Proposal or a Request for Qualification or a Bid in response to an Invitation to Bid. Describe accurately, fully and completely, their respective relationships with said Offeror, including their ownership interests and their anticipated role in the management and operations of said Offeror.

2. Please describe the general development of said Offeror's business during the past five (5) years, or such shorter period of time that said Offeror has been in business.

3. Please state whether any employee, agent or representative of said Offeror who is or will be directly involved in the subject project has or has ever: (i) directly or indirectly had a business relationship with Fulton County; (ii) directly or indirectly received revenues from Fulton County; or (iii) directly or indirectly receives revenues from the result of conducting business on Fulton County property or pursuant to any contract with Fulton County. Please describe in detail any such relationship.

LITIGATION DISCLOSURE:

Failure to fully and truthfully disclose the information required, may result in the disqualification of your bid or proposal from consideration or termination of the Contract, once awarded.

1. Please state whether any of the following events have occurred in the last five (5) years with respect to said Offeror. If any answer is yes, explain fully the following:

   (a) whether a petition under the federal bankruptcy laws or state insolvency laws was filed by or against said Offeror, or a receiver fiscal agent or similar officer was appointed by a court for the business or property of said Offeror;

   Circle One: YES NO

   (b) whether Offeror was subject of any order, judgment, or decree not subsequently reversed, suspended or vacated by any court of competent jurisdiction, permanently enjoining said Offeror from engaging in any type of business practice, or otherwise eliminating any type of business practice; and

   Circle One: YES NO

   (c) whether said Offeror's business was the subject of any civil or criminal proceeding in which there was a final adjudication adverse to said or Offeror, which directly arose from activities conducted by the business unit or corporate division of said Offeror which submitted a bid or proposal for the subject project. If so please explain.

   Circle One: YES NO

2. Have you or any member of your firm or team to be assigned to this engagement ever been indicted or convicted of a criminal offense within the last five (5) years?

   Circle One: YES NO

3. Have you or any member of your firm or team been terminated (for cause or otherwise) from any work being performed for Fulton County or any other Federal, State or Local Government?

   Circle One: YES NO

4. Have you or any member of your firm or team been involved in any claim or litigation adverse to Fulton County or any other federal, state or local government, or private entity during the last three (3) years?

   Circle One: YES NO

5. Has any offeror, member of offeror's team, or officer of any of them (with respect to any matter involving the business practices or activities of his or her employer), been notified within the five (5) years preceding the date of this offer that any of them are the target of a criminal investigation, grand jury investigation, or civil enforcement proceeding?

Circle One: YES NO

If you have answered "YES" to any of the above questions, please indicate the name(s) of the person(s), the nature, and the status and/or outcome of the information, indictment, conviction, termination, claim or litigation, the name of the court and the file or reference number of the case, as applicable. Any such information should be provided on a separate page, attached to this form and submitted with your proposal.

NOTE: If any response to any question set forth in this questionnaire has been disclosed in any other document, a response may be made by attaching a copy of such disclosure. (For example, said Offeror's most recent filings with the Securities and Exchange Commission ("SEC") may be provided if they are responsive to certain items within the questionnaire.) However, for purposes of clarity, Offeror should correlate its responses with the exhibits by identifying the exhibit and its relevant text.

Disclosures must specifically address, completely respond and comply with all information requested and fully answer all questions requested by Fulton County. Such disclosure must be submitted at the time of the bid or proposal submission and included as a part of the bid/proposal submitted for this project. Disclosure is required for Offerors, joint venture partners and first-tier subcontractors.

Failure to provide required disclosure, submit officially signed and notarized documents or respond to any and all information requested/required by Fulton County can result in the bid/proposal declared as non-responsive. This document must be completed and included as a part of the bid/proposal package along with other required documents.

[SIGNATURES ON NEXT PAGE]

Under penalty or\f perjury, I declare that I have examined this questionnaire and all attachments hereto, if applicable, to the best of my knowledge and belief, and all statements contained hereto are true, correct, and complete.

On this _____ day of _____, 20_____

_____
(Legal Name of Proponent) (Date)

_____
(Signature of Authorized Representative) (Date)

_____
(Title)

Sworn to and subscribed before me,

This _____ day of _____, 20___

_____
(Notary Public) (Seal)

Commission Expires _____
(Date)

FORM F: GEORGIA SECURITY AND IMMIGRATION CONTRACTOR AFFIDAVIT AND AGREEMENT

Instructions:

Contractors must attest to compliance with the requirements of O.C.G.A 13-10-91 and the Georgia Department of Labor Rule 300-10-01-.02 by executing the Contractor Affidavit provided.

STATE OF GEORGIA

COUNTY OF FULTON

FORM F: GEORGIA SECURITY AND IMMIGRATION CONTRACTOR AFFIDAVIT AND AGREEMENT

By executing this affidavit, the undersigned contractor verifies its compliance with O.C.G.A. 13-10-91, stating affirmatively that the individual, firm or corporation which is engaged in the physical performance of services[1] under a contract with **[insert name of prime contractor]** _____ on behalf of **Fulton County Government** has registered with and is participating in a federal work authorization program*,[2] in accordance with the applicability provisions and deadlines established in O.C.G.A. 13-10-91.

The undersigned further agrees that, should it employ or contract with any subcontractor(s) in connection with the physical performance of services to this contract with **Fulton County Government**, contractor will secure from such subcontractor(s) similar verification of compliance with O.C.G.A. 13-10-91 on the Subcontractor Affidavit provided in Rule 300-10-01-.08 or a substantially similar form. Contractor further agrees to maintain records of such compliance and provide a copy of each such verification to the **Fulton County Government** at the time the subcontractor(s) is retained to perform such service.

_____
EEV/Basic Pilot Program* User Identification Number

_____
BY: Authorized Officer of Agent
(Insert Contractor Name)

_____
Title of Authorized Officer or Agent of Contractor

_____
Printed Name of Authorized Officer or Agent

Sworn to and subscribed before me this _____ day of _____, 20__.

Notary Public: _____

County: _____

Commission Expires: _____

[1]O.C.G.A.§ 13-10-90(4), as amended by Senate Bill 160, provides that "physical performance of services" means any performance of labor or services for a public employer (e.g., Fulton County) using a bidding process (e.g., ITB, RFQ, RFP, etc.) or contract wherein the labor or services exceed $2,499.99, except for those individuals licensed pursuant to title 26 or Title 43 or by the State Bar of Georgia and is in good standing when such contract is for service to be rendered by such individual.

[2]*[Any of the electronic verification of work authorization programs operated by the United States Department of Homeland Security or any equivalent federal work authorization program operated by the United States Department of Homeland Security to verify information of newly hired employees, pursuant to the Immigration Reform and Control Act of 1986 (IRCA), P.L. 99-603].

FORM G: GEORGIA SECURITY AND IMMIGRATION SUBCONTRACTOR AFFIDAVIT

Instructions:

In the event that your company is awarded the contract for this project, and will be utilizing the services of any subcontractor(s) in connection with the physical performance of services pursuant to this contract, the following affidavit must be completed by such subcontractor(s). Your company must provide a copy of each such affidavit to Fulton County Government, Department of Purchasing & Contract Compliance with the proposal submittal.

All subcontractor affidavit(s) shall become a part of the contract and all subcontractor(s) affidavits shall be maintained by your company and available for inspection by Fulton County Government at any time during the term of the contract. All subcontractor(s) affidavit(s) shall become a part of any contractor/subcontractor agreement(s) entered into by your company.

STATE OF GEORGIA

COUNTY OF FULTON

FORM G: GEORGIA SECURITY AND IMMIGRATION SUBCONTRACTOR AFFIDAVIT

By executing this affidavit, the undersigned subcontractor verifies its compliance with O.C.G.A. 13-10-91, stating affirmatively that the individual, firm or corporation which is engaged in the physical performance of services[3] under a contract with **[insert name of prime contractor]** _____behalf of **Fulton County Government** has registered with and is participating in a federal work authorization program*,[4] in accordance with the applicability provisions and deadlines established in O.C.G.A. 13-10-91.

_____
EEV/Basic Pilot Program* User Identification Number

_____
BY: Authorized Officer of Agent
(Insert Subcontractor Name)

_____
Title of Authorized Officer or Agent of Subcontractor

_____
Printed Name of Authorized Officer or Agent

Sworn to and subscribed before me this _____ day of _____, 20__.

Notary Public: _____

County: _____

Commission Expires: _____

[3]O.C.G.A.§ 13-10-90(4), as amended by Senate Bill 160, provides that "physical performance of services" means any performance of labor or services for a public employer (e.g., Fulton County) using a bidding process (e.g., ITB, RFQ, RFP, etc.) or contract wherein the labor or services exceed $2,499.99, except for those individuals licensed pursuant to title 26 or Title 43 or by the State Bar of Georgia and is in good standing when such contract is for service to be rendered by such individual.

[4]*[Any of the electronic verification of work authorization programs operated by the United States Department of Homeland Security or any equivalent federal work authorization program operated by the United States Department of Homeland Security to verify information of newly hired employees, pursuant to the Immigration Reform and Control Act of 1986 (IRCA), P.L. 99-603].

SECTION 7

CONTRACT COMPLIANCE REQUIREMENTS

NON-DISCRIMINATION IN PURCHASING AND CONTRACTING

It is the policy of Fulton County Government that discrimination against businesses by reason of the race, color, gender or national origin of the ownership of any such business is prohibited. Furthermore, it is the policy of the Board of Commissioners ("Board") that Fulton County and all vendors and contractors doing business with Fulton County shall provide to all businesses the opportunity to participate in contracting and procurement paid, in whole or in part, with monetary appropriations of the Board without regard to the race, color, gender or national origin of the ownership of any such business. Similarly, it is the policy of the Board that the contracting and procurement practices of Fulton County should not implicate Fulton County as either an active or passive participant in the discriminatory practices engaged in by private contractors or vendors seeking to obtain contracts with Fulton County.

Implementation of Equal Employment Opportunity (EEO) Policy

The County effectuates Equal Employment Opportunity thru Policy #800-8, Non-Discrimination in Contracting and Procurement. This policy considers racial and gender workforce availability. The availability of each workgroup is derived from the work force demographics set forth in the 2000 Census EEO file prepared by the United States Department of Commerce for the applicable labor pool normally utilized for the contract.

Monitoring of EEO Policy

Upon award of a contract with Fulton County, the successful bidder/proposer must complete an Equal Employment Opportunity Report (EEOR), describing the racial and gender make-up of the firm's work force. If the EEOR indicates that the firm's demographic composition indicates underutilization of employee's of a particular ethnic group for each job category, the firm will be required to submit an aggressive action plan setting forth steps the firm will take to address the identified underutilization.

DETERMINATION OF GOOD FAITH EFFORTS

During the course of the project, the Prime Contractor shall demonstrate that they have made all efforts reasonably possible to ensure that Minority and Female Business Enterprises (MFBE) have had a full and fair opportunity to compete and win subcontracts on this project. The Prime Contractor is required to include all outreach attempts that would demonstrate a "Good Faith Effort" in the solicitation of sub-consultants/subcontractors.

Written documentation demonstrating the Prime Contractor's outreach efforts to identify, contact, contract with or utilize Minority or Female owned businesses shall include holding pre-bid conferences, publishing advertisements in general circulation media, trade association publications, minority-focused media, and the County's bid board, as well as other efforts.

Include a list of publications where the advertisement was placed as well as a copy of the advertisement. Advertisement shall include at a minimum, scope of work, project location, location(s) of where plans and specifications may be viewed or obtained and trade or scopes of

work for which subcontracts are being solicited.

EQUAL BUSINESS OPPORTUNITY PLAN (EBO PLAN)

In addition to the proposal submission requirements, each vendor **must** submit an Equal Business Opportunity Plan (EBO Plan) with their bid/proposal. The EBO Plan is designed to enhance the utilization of a particular racial, gender or ethnic group by a bidder/proposer, contractor, or vendor or by Fulton County. The respondent **must** outline a plan of action to encourage and achieve diversity and equality in the available procurement and contracting opportunities with *this solicitation*.

The EBO Plan **must** identify and include:

1. Potential opportunities within the scope of work of *this solicitation* that will allow for participation of racial, gender or ethnic groups.

2. Efforts that will be made by the bidder/proposer to encourage and solicit minority and female business utilization in *this solicitation*.

Fulton County encourages joint ventures, teaming, partnering and mentor-protégé relationships with minority and female businesses in an effort to achieve contracting and procurement diversity.

Prompt Payment: The prime contractor **must** certify in writing and **must** document all subcontractors, sub-consultants and suppliers have been promptly paid for work and materials, (less any retainage by the prime contractor prior to receipt of any further progress payments). In the event the prime contractor is unable to pay subcontractors, sub-consultants or suppliers until it has received a progress payment from Fulton County, the prime contractor shall pay all subcontractors, sub-consultants or suppliers funds due from said progress payment within forty-eight (48) hours of receipt of payment from Fulton County. In no event shall a subcontractor, sub-consultant or supplier be paid later than fifteen (15) days as provided for by state law.

REQUIRED FORMS AND EBO PLAN

In order to be compliant with the intent and provisions of the Fulton County Non-Discrimination in Purchasing and Contracting Ordinance (99-0960), bidders/proposers **must** submit the following completed documents. Failure to provide this information **shall** result in the proposal being deemed non-responsive.

- Exhibit A – Promise of Non-Discrimination
- Exhibit B – Employment Report
- Exhibit C – Schedule of Intended Subcontractor Utilization
- Exhibit D – Letter of Intent to Perform as a Subcontractor or Provide Materials or Services
- Exhibit E – Declaration Regarding Subcontractors Practices
- Exhibit F – Joint Venture Disclosure Affidavit
- Equal Business Opportunity Plan (EBO Plan). This document is not a form rather a statement created by the bidder/proposer on its company letter head addressing the EBO Plan requirements.
- Exhibit H – First Source Jobs Program Information, Form 1

The following document must be completed as instructed if awarded the project:

- Exhibit G – Prime Contractor's Subcontractor Utilization Report
- Exhibit H – First Source Jobs Program Agreement, Form 2

All Contract Compliance documents (Exhibits A – H and EBO Plan) are to be placed in a **separate sealed envelope** clearly marked "Contract Compliance". The EBO Plan must be submitted on company letterhead. These documents are considered part of and should be submitted with the Technical Proposal.

EXHIBIT A – PROMISE OF NON-DISCRIMINATION

"Know all persons by these presents, that I/We (_____),
Name

_____ _____
Title Firm Name

Hereinafter "Company", in consideration of the privilege to bid on or obtain contracts funded, in whole or in part, by Fulton County, hereby consent, covenant and agree as follows:

1) No person shall be excluded from participation in, denied the benefit of, or otherwise discriminated against on the basis of race, color, national origin or gender in connection with any bid submitted to Fulton County for the performance of any resulting there from,

2) That it is and shall be the policy of this Company to provide equal opportunity to all businesses seeking to contract or otherwise interested in contracting with this Company without regard to the race, color, gender or national origin of the ownership of this business,

3) That the promises of non-discrimination as made and set forth herein shall be continuing in nature and shall remain in full force and effect without interruption,

4) That the promise of non-discrimination as made and set forth herein shall be made a part of, and incorporated by reference into, any contract or portion thereof which this Company may hereafter obtain,

5) That the failure of this Company to satisfactorily discharge any of the promises of non-discrimination as made and set forth herein shall constitute a material breach of contract entitling the Board to declare the contract in default and to exercise any and all applicable rights and remedies, including but not limited to cancellation of the contract, termination of the contract, suspension and debarment from future contracting opportunities, and withholding and/or forfeiture of compensation due and owning on a contract; and

6) That the bidder shall provide such information as may be required by the Director of Purchasing & Contract Compliance pursuant to the Fulton County Non-Discrimination in Purchasing and Contracting Ordinance.

SIGNATURE:_____

ADDRESS:_____

_____

TELEPHONE NUMBER:_____

EXHIBIT B – EMPLOYMENT REPORT

The demographic employment make-up for the bidder must be identified and submitted with this bid/proposal. In addition, if subcontractors will be utilized by the bidder/proposer to complete this project, then the demographic employment make-up of the subcontractor(s) must be identified and submitted with this bid.

JOB CATEGORIES	**TOTAL EMPLOYED**		**TOTAL MINORITIES**		WHITE (Not Hispanic Origin)		BLACK or AFRICAN AMERICAN (Not of Hispanic Origin)		HISPANIC or LATINO		AMERICAN INDIAN or ALASKAN NATIVE (AIAN)		ASIAN		NATIVE HAWAIIAN or OTHER PACIFIC ISLANDER (NHOP)		TWO or MORE RACES	
	M	**F**	**M**	**F**	**M**	**F**	**M**	**F**	**M**	**F**	**M**	**F**	**M**	**F**	**M**	**F**	**M**	**F**
EXECUTIVE/SENIOR LEVEL OFFICIALS and MANAGERS																		
FIRST/MID LEVEL OFFICIALS and MANAGERS																		
PROFESSIONALS																		
TECHNICIANS																		
SALES WORKERS																		
ADMINISTRATIVE SUPPORT WORKERS																		
CRAFT WORKERS																		
OPERATIVES																		
LABORERS & HELPERS																		
SERVICE WORKERS																		
TOTAL																		

FIRMS'S NAME _____
ADDRESS _____
TELEPHONE _____
This completed form is for (Check only one): _____ Bidder/Proposer _____ Subcontractor
Submitted by: _____ Date Completed: _____

EXHIBIT C - SCHEDULE OF INTENDED SUBCONTRACTOR UTILIZATION

If the bidder/proposer intends to subcontract any portion of this scope of work/service(s), this form **must be** completed and **submitted with the bid/proposal.** All prime bidders/proposers **must** include Letter(s) of Intent (Exhibit D) in the bid document for all subcontractors who will be utilized under the scope of work/services.

Prime Bidder/Proposer:_____

ITB/RFP Number:_____

Project Name or Description of Work/Service(s):_____

_____

_____

1. My firm, as Prime Bidder/Proposer on this scope of work/service(s) is_____is not____a minority or female owned and controlled business enterprise. (Please indicate below the portion of work, including, percentage of bid/proposal amount that your firm will carry out directly):

_____
_____

2. If the Prime Bidder/Proposer is a Joint Venture, please complete Exhibit F: Joint Venture Disclosure Affidavit and attach a copy of the executed Joint Venture Agreement.

3. Sub-Contractors (including suppliers) to be utilized in the performance of this scope of work/service(s), if awarded, are:

SUBCONTRACTOR NAME:_____
ADDRESS:_____
_____
PHONE:_____
CONTACT PERSON:_____
ETHNIC GROUP*:_____COUNTY CERTIFIED**_____
WORK TO BE PERFORMED:_____
_____
DOLLAR VALUE OF WORK: $_____ PERCENTAGE VALUE:_____%

***Ethnic Groups: African American (AABE); Asian American (ABE); Hispanic American (HBE); Native American (NABE); White Female American (WFBE); **If yes, please attach copy of recent certification.**

SUBCONTRACTOR NAME:_____
ADDRESS:_____
_____
PHONE:_____
CONTACT PERSON:_____
ETHNIC GROUP*:_____COUNTY CERTIFIED**_____
WORK TO BE PERFORMED:_____
_____
DOLLAR VALUE OF WORK: $_____ PERCENTAGE VALUE:_____%

SUBCONTRACTOR NAME:_____
ADDRESS:_____
_____
PHONE:_____
CONTACT PERSON:_____
ETHNIC GROUP*:_____COUNTY CERTIFIED**_____
WORK TO BE PERFORMED:_____
_____
DOLLAR VALUE OF WORK: $_____ PERCENTAGE VALUE:_____%

SUBCONTRACTOR NAME:_____
ADDRESS:_____
_____
PHONE:_____
CONTACT PERSON:_____
ETHNIC GROUP*:_____COUNTY CERTIFIED**_____
WORK TO BE PERFORMED:_____
_____
DOLLAR VALUE OF WORK: $_____ PERCENTAGE VALUE:_____%

SUBCONTRACTOR NAME:_____
ADDRESS:_____
_____
PHONE:_____
CONTACT PERSON:_____
ETHNIC GROUP*:_____COUNTY CERTIFIED**_____
WORK TO BE PERFORMED:_____
_____
DOLLAR VALUE OF WORK: $_____ PERCENTAGE VALUE:_____%

***Ethnic Groups: African American (AABE); Asian American (ABE); Hispanic American (HBE); Native American (NABE); White Female American (WFBE); **If yes, please attach copy of recent certification.**

Total Dollar Value of Subcontractor Agreements: ($)

Total Percentage Value: (%)

CERTIFICATION: The undersigned certifies that he/she has read, understands and agrees to be bound by the Bid/Proposer provisions, including the accompanying Exhibits and other terms and conditions regarding sub-contractor utilization. The undersigned further certifies that he/she is legally authorized by the Bidder/Proposer to make the statement and representation in this Exhibit and that said statements and representations are true and correct to the best of his/her knowledge and belief. The undersigned understands and agrees that if any of the statements and representations are made by the Bidder/Proposer knowing them to be false, or if there is a failure of the intentions, objectives and commitments set forth herein without prior approval of the County, then in any such event the Contractor's acts or failure to act, as the case may be, shall constitute a material breach of the contract, entitling the County to terminate the Contract for default. The right to so terminate shall be in addition to, and in lieu of, any other rights and remedies the County may have for other defaults under the contract.

Signature:_____**Title**:_____

Firm or Corporate Name:_____

Address:_____

_____

Telephone: ( )_____

Fax Number: ( )_____

Email Address:_____

EXHIBIT D

LETTER OF INTENT TO PERFORM AS A SUBCONTRACTOR OR PROVIDE MATERIALS OR SERVICES

This form **must** be completed by **ALL** known subcontractor and submitted with the bid/proposal. The Prime Contractor **must** submit Letters of Intent for **ALL** known subcontractors at time of bid submission.

To:_____
(Name of Prime Contractor Firm)

From:_____
(Name of Subcontractor Firm)

ITB/RFP Number:_____

Project Name:_____

The undersigned is prepared to perform the following described work or provide materials or services in connection with the above project (specify in detail particular work items, materials, or services to be performed or provided):

Description of Work	Project Commence Date	Project Completion Date	Estimated Dollar Amount

_____	_____
(Prime Bidder)	**(Subcontractor)**
Signature_____	**Signature**_____
Title_____	**Title**_____
Date_____	**Date**_____

EXHIBIT E - DECLARATION REGARDING SUBCONTRACTING PRACTICES

If the bidder/proposer **does not intend to subcontract** any portion of the scope of work services(s), this form **must be** completed and submitted with the bid/proposal.

_____hereby declares that it is my/our intent to
(Bidder)

perform 100% of the work required for_____
(ITB/RFP Number)

_____
(Description of Work)

In making this declaration, the bidder/proposer states the following:

1. That the bidder/proposer does not customarily subcontract elements of this type project, and normally performs and has the capability to perform and will perform **all elements** of the work on this project with his/her own current work forces;

2. If it should become necessary to subcontract some portion of the work at a later date, the bidder/proposer will comply with all requirements of the County's Non-Discrimination Ordinance in providing equal opportunities to all firms to subcontract the work. The determination to subcontract some portion of the work at a later date shall be made in good faith and the County reserves the right to require additional information to substantiate a decision made by the bidder/proposer to subcontract work following the award of the contract. Nothing contained in this provision shall be employed to circumvent the spirit and intent of the County's Non-Discrimination Ordinances;

3. The bidder will provide, upon request, information sufficient for the County to verify Item Number one.

AUTHORIZED COMPANY REPRESENTATIVE

Name:_____ **Title:**_____ **Date:**_____

Signature:_____

Firm:_____

Address:_____

Phone Number:_____

Fax Number:_____

Email Address:_____

EXHIBIT F - JOINT VENTURE DISCLOSURE AFFIDAVIT

ITB No._____

Project Name_____

This form must be completed and submitted with the bid/proposal if a joint venture approach is to be undertaken.

In order to evaluate the extent of small, minority and female business involvement being proposed by a Bidder/Proposer, certain relevant information must be provided prior to contract award. The information requested below is to clearly identify and explain the extent of small business participation in the proposed joint venture. All items must be properly addressed before the business entity can be evaluated.

1. Firms:

1) **Name of Business:**_____
Street Address:_____
Telephone No.:_____
Nature of Business:_____

2) Name of Business:_____
Street Address:_____
Telephone No.:_____
Nature of Business:_____

3) Name of Business:_____
Street Address:_____
Telephone No.:_____
Nature of Business:_____

NAME OF JOINT VENTURE (If applicable):_____

ADDRESS:_____

_____

PRINCIPAL OFFICE:_____

OFFICE PHONE:_____

Note: Attach additional sheets as required

1. Describe the capital contributions by each joint venturer and accounting thereof.

2. Describe the financial controls of the joint venture, e.g., will a separate cost center be established? Which venturer will be responsible for keeping the books? How will the expense therefore be reimbursed? What is the authority of each joint venture to commit or obligate the order?

3. Describe any ownership, options for ownership, or loans between the joint ventures. Identify terms thereof.

4. Describe the estimated contract cash flow for each joint venturer.

5. To what extent and by whom will the on-site work be supervised?

6. To what extent and by whom will the administrative office be supervised?

7. Which joint venturer will be responsible for material purchases including the estimated cost thereof? How will the purchase be financed?

8. Which joint venturer will provide equipment? What is the estimated cost thereof? How will the equipment be financed?

9. Describe the experience and business qualifications of each joint venturer.

10. Submit a copy of all joint venture agreements and evidence of authority to do business in the State of Georgia as well as locally, to include all necessary business licenses.

11. Percent of Minority/Female Business Enterprises ownership by each joint venture in terms of profit and loss sharing:_____
_____
_____

12. The authority of each joint venturer to commit or obligate the other:_____
_____

13. Number of personnel to be involved in project, their crafts and positions and whether they are employees of the Minority/Female Business Enterprises enterprise, the majority firm or the joint venture: _____

14. Identification of control and participation in venture; list those individuals who are responsible for day-to-day management and policy decision-maker, including, but not limited to, those with prime responsibility for areas designated below; (use additional sheets if necessary)

Financial		Supervision		
Name	Race	Sex	Decisions	Field Operation
_____	_____	_____	_____	_____
_____	_____	_____	_____	_____
_____	_____	_____	_____	_____
_____	_____	_____	_____	_____
_____	_____	_____	_____	_____

In connection with any work that these firms, as a joint venture, might be authorized to perform in connection with above captioned contract, we each do hereby authorize representatives of the Fulton County Department of Contract Compliance, Departments of Purchasing and Contract Compliance, and Finance, under the direction of the County Manger's Office, to examine, from time to time, the books, records and files to the extent that such relate to this County project.

WE DO SOLEMNLY DECLARE AND AFFIRM UNDER THE PENALTIES OF PERJURY THAT THE CONTENTS OF THE FOREGOING DOCUMENT ARE TRUE AND CORRECT, AND THAT WE ARE AUTHORIZED, ON BEHALF OF THE ABOVE FIRMS, TO MAKE THIS AFFIDAVIT AND GRANT THE ABOVE PRIVILEGE.

FOR_____
(Company)

Date:_____ _____
(Signature of Affiant)

_____
(Printed Name)

_____
(Company)

Date:_____ _____
(Signature of Affiant)

_____
(Printed Name)

State of_____**:**

County of_____**:**

On this _____ day of _____, 20___, before me, appeared _____, the undersigned officer, personally appeared _____ known to me to be the person described in the foregoing Affidavit and acknowledges that he (she) executed the same in the capacity therein stated and for the purpose therein contained.

EXHIBIT – G PRIME CONTRACTOR/SUB-CONTRACTOR UTILIZATION REPORT

This report **must** be submitted by the **tenth day** of each month, along with a copy of your monthly invoice (schedule of values/payment application) to Contract Compliance. Failure to comply **shall** result in the County commencing proceedings to impose sanctions to the prime contractor, in addition to pursuing any other available legal remedy. Sanctions may include the suspending of any payment or part thereof, termination or cancellation of the contract, and the denial of participation in any future contracts awarded by Fulton County.

REPORTING PERIOD		**PROJECT NAME:**	
FROM:		**PROJECT NUMBER:**	
TO:		**PROJECT LOCATION:**	

PRIME CONTRACTOR		**Contract Award Date**	**Contract Award Amount**	**Change Order Amount**	**Contract Period**	**% Complete to Date**
Name:						
Address:						
Telephone #:						

AMOUNT OF REQUISITION THIS PERIOD: $_____
TOTAL AMOUNT REQUISITION TO DATE: $_____
TOTAL AMOUNT REQUISITION TO DATE: $_____

SUBCONTRACTOR UTILIZATION (add additional rows as necessary)

Name of Sub-Contractor	**Description of Work**	**Contract Amount**	**Amount Paid To Date**	**Amount Requisition This Period**	**Contract Period Starting Date**	**Ending Date**
TOTALS						

Executed By: _____ _____
(Signature) ***(Printed Name)***

Notary: _____ **Date:** _____ **My Commission Expires:** _____

Should you have questions regarding any of the documents contained in Section 6, please feel free to contact the Office of Contract Compliance at (404) 763-6300, for further assistance.

EXHIBIT H

FULTON COUNTY FIRST SOURCE JOBS PROGRAM

STATEMENT OF POLICY:

It is the policy of Fulton County Government to provide employment opportunities to the citizens of Fulton County. This policy will apply to all contracts procured through the Department of Purchasing & Contract Compliance valued in excess of $200,000. The Prime Contractor is expected to utilize the First Source Jobs Program to fill 50% of the entry level jobs which arise as a result of any project funded in whole or in part with County funds with residents of Fulton County.

PURPOSE:

The purpose of this policy is to create a pool of employable persons who are residents of Fulton County to be called upon as a source to fill jobs created as a result of any eligible project funded in whole or in part with County funds in order to provide stable economic opportunities for families throughout the County. The First Source Jobs Program will be implemented by the Department of Purchasing & Contract Compliance and the Office of Workforce Development.

MONITORING POLICY:

Upon execution of a contract with Fulton County Government, the First Source Jobs Agreement (FSJ Form 1) will become a part of the contract between the bidder/proposer and Fulton County Government. The First Source Jobs Program will be monitored during routine site visits by the Office of Contract Compliance along with the Office of Workforce Development.

FULTON COUNTY

First Source Jobs Program Information

Company Name: _____

Project Number: _____

Project Name: _____

The following entry-level positions will become available as a result of the above referenced contract with Fulton County.

1. _____

2. _____

3. _____

4. _____

5. _____

6. _____

Include a job description and all required qualifications for each position listed above.

Identify a company representative and contact phone number who will be responsible for coordinating with the First Source Jobs Program:

Company Representative: _____

Phone Number: _____

Email Address: _____

FORM 1

FULTON COUNTY
First Source Jobs Program Agreement

Awarded Contractor's Name: _____

Formal Contract Name: _____

RFP/ITB Number: _____

Contact Person: _____

Contact Phone: _____

The contractor listed above agrees to the following:

1. The contractor shall make a good faith effort to fill 50% of the entry level position(s) created by this project using the Fulton County First Source Jobs Program.

2. The contractor shall provide the applicable details of every entry level job in writing within the required form.

3. The contractor shall be expected to present documentation that confirms employment terms to both the employee and Fulton County.

The Office of Contract Compliance will assist with monitoring the participation of First Source Jobs Program employees during routine site visits and report findings to the Office of Workforce Development for confirmation and follow-up. The Office of Workforce Development shall notify the Director of Human Services and the Purchasing Agent of any determination of non-compliance with the requirements of this policy and recommend a resolution or action to be taken.

Upon a determination by the Purchasing Agent and the Director of Human Services that a contractor has failed to comply with any portion of this policy, the County may impose the following:

1. Ten percent (10%) of all future payments under the involved eligible project shall be entitled to be withheld from a contractor that has violated this policy until the contractor complies with the provisions of this policy.

The undersigned agrees to the terms and conditions set forth in this agreement.

Contractor's Official Title: _____ Date: _____

Contractor's Name: _____

Contractor's Signature: _____

FORM 2

SECTION 8

GENERAL CONDITIONS

GENERAL CONDITIONS:

00700-1 FAMILIARITY WITH SITE

Execution of this agreement by the Contractor is a representation that the Contractor has become familiar with the local conditions under which the work is to be performed, and has correlated personal observations with the requirements of this agreement.

00700-2 CONTRACT DOCUMENTS

This agreement consists of Owner's invitation for bid, instructions to bidders, bid form, performance bond, payment bond, acknowledgments, the contract, general conditions, special conditions, specifications, plans, drawings, exhibits, addenda, and written change orders.

A. Notice of Award of Contract:

B. Execution of Contract Documents

Upon notification of Award of Contract, the Owner shall furnish the Contractor the conformed copies of Contract Documents for execution by the Contractor and the Contractor's surety.

Within ten (10) days after receipt the Contractor shall return all the documents properly executed by the Contractor and the Contractor's surety. Attached to each document shall be an original power-of-attorney for the person executing the bonds for the surety and certificates of insurance for the required insurance coverage.

After receipt of the documents executed by the Contractor and his surety with the power-of-attorney and certificates of insurance, the Owner shall complete the execution of the documents. Distribution of the completed documents will be made upon completion.

Should the Contractor and/or Surety fail to execute the documents within the time specified; the Owner shall have the right to proceed on the Bid Bond accompanying the bid.

If the Owner fails to execute the documents within the time limit specified, the Contractor shall have the right to withdraw the Contractor's bid without penalty.

Drawings and Specifications:

The Drawings, Specifications, Contract Documents, and all supplemental documents, are considered essential parts of the Contract, and requirements occurring in one are as binding as though occurring in all. They are intended to define, describe and provide for all Work necessary to complete the Project in an acceptable manner, ready for use, occupancy, or operation by the Owner.

In case of conflict between the Drawings and Specifications, the Specifications shall govern. Figure dimensions on Drawings shall govern over scale dimensions, and detailed Drawings shall govern over general Drawings.

In cases where products or quantities are omitted from the Specifications, the description and quantities shown on the Drawings shall govern.

Any ambiguities or need for clarification of the Drawings or Specifications shall be immediately reported to the Construction Manager in writing. Any such ambiguity or need for clarification shall be handled by the Construction Manager in writing. No clarification of the Drawings and Specifications hereunder by the Construction Manager shall entitle the Contractor to any additional monies unless a Change Order has been processed as provided by "Changes in the Contract" hereof.

Any work done by the Contractor following a discovery of such differing site condition or ambiguity or need for clarification in the Contract Drawings and Specifications prior to a written report to the Construction Manager shall not entitle the Contractor to additional monies and shall be done at the Contractor's risk.

00700-3 DEFINITIONS

The following terms as used in this agreement are defined as follows to the extent the definitions herein differ or conflict with those in the Instructions for Bidders, Section 00100, the definitions herein shall control.

Change Order - A written order to the Contractor issued by the County pursuant to Fulton County Policy and Procedures 800-6 for changes in the work within the general scope of the contract documents, adjustment of the contract price, extension of the contract time, or reservation of determination of a time extension.

Construction Manager or Engineer shall mean Fulton County assigned Construction Project Manager, the County authorized representative for this project.

Contractor shall mean the party of the second part to the Contract Agreement or the authorized and legal representative of such party.

Contract Documents include the Contract Agreement, Contractor's Bid (including all documentation accompanying the Bid and any post-Bid documentation required by the County prior to the Notice of Award), Bonds, all Special Conditions, General Conditions, Supplementary Conditions, Specifications, Drawings and addenda, together with written amendments, change orders, field orders and the Construction Manager's written interpretations and clarifications issued in accordance with the General Conditions on or after the date of the Contract Agreement.

Shop drawing submittals reviewed in accordance with the General Conditions, geotechnical investigations and soils report and drawings of physical conditions in or relating to existing surface structures at or contiguous to the site are not Contract Documents.

Contract Price - The sum specified in the Agreement to be paid to the Contractor in consideration of the Work.

Contract Time shall mean the number of consecutive calendar days as provided in the Contract Agreement for completion of the Work, to be computed from the date of Notice to Proceed.

Owner or County shall mean Fulton County Government, party of the first part to the Contract Agreement, or its authorized and legal representatives.

Day - A calendar day of twenty-four hours lasting from midnight of one day to midnight the next day.

Design Consultant shall mean the firm or corporation responsible for the detailed design drawings and specifications.

Director - Director of the Department of Water Resources of Fulton County, Georgia or the designee thereof.

Emergency work shall mean County identified work affecting the safety of persons or property where the Contractor is required to act immediately to prevent threatened damage, injury or loss to remedy said emergency condition.

Final Completion shall mean the completion of all work as required in accordance with the terms and conditions of the contract documents.

Liquidated Damages shall mean the amount, stated in the Contract Agreement, which the Contractor agrees to pay to the Owner for each consecutive calendar day beyond the Contract time required to complete the Project or for failing to comply with associated milestones. Liquidated Damages will end upon written notification from the Owner of Final Acceptance of the Project or upon written notification of from the Owner of completion of the milestone.

Non Emergency work shall mean work assigned to the Contractor where there is no immediate threat of damage, injury or loss to persons or property.

Notice to Proceed - A written communication issued by the County to the Contractor authorizing it to proceed with the work, establishing the date of commencement and completion of the work, and providing other direction to the Contractor. In emergency situations, the Notice to Proceed may be given to the Contractor verbally and followed up with the written notice.

Products shall mean materials or equipment permanently incorporated into the work.

Program Manager - Not used in this contract. Delete all references.

Project Manual - The Contract Documents.

Provide shall mean to furnish and install.

Substantial Completion - The date certified by the Construction Manager when all or a part of the work, as established pursuant to General Condition 0700-81, is sufficiently completed in accordance with the requirements of the contract documents so that the identified portion of the work can be utilized for the purposes for which it is intended.

Work or Project - All of the services specified, indicated, shown or contemplated by the contract documents, and furnishing by the Contractor of all materials, equipment, labor, methods, processes, construction and manufacturing materials and equipment, tools, plans, supplies, power, water, transportation and other things necessary to complete such services in accordance with the contract documents to insure a functional and complete facility.

00700-4 CODES

All codes, specifications, and standards referenced in the contract documents shall be the latest editions, amendments and revisions of such referenced standards in effect as of the date of the request for proposals for this contract.

00700-5 REVIEW OF CONTRACT DOCUMENTS

Before making its proposal to the County, and continuously after the execution of the agreement, the Contractor shall carefully study and compare the contract documents and shall at once report to the Construction Manager any error, ambiguity, inconsistency or omission that may be discovered, including any requirement which may be contrary to any law, ordinance, rule, or regulation of any public authority bearing on the performance of the work. By submitting its proposal, the Contractor agrees that the contract documents, along with any supplementary written instructions issued by or through the Construction Manager that have become a part of the contract documents, appear accurate, consistent and complete insofar as can be reasonably determined. If the Contractor has timely reported in writing any error, inconsistency, or omission to the Construction Manager, has properly stopped the affected work until instructed to proceed, and has otherwise followed the instructions of the Construction Manager, the Contractor shall not be liable to the County for any damage resulting from any such error, inconsistency, or omission in the contract documents. The Contractor shall not perform any portion of the work without the contract documents, approved plans, specifications, products and data, or samples for such portion of the work. For purposes of this section “timely” is defined as the time period in which the contractor discovers, or should have discovered, the error, inconsistency, or omission, with the exercise of reasonable diligence.

00700-6 STRICT COMPLIANCE

No observation, inspection, test or approval of the County or Construction Manager shall relieve the Contractor from its obligation to perform the work in strict conformity with the contract documents except as provided in General Condition 00700-48.

00700-7 APPLICABLE LAW

All applicable State laws, County ordinances, codes, and rules and regulations of all authorities having jurisdiction over the construction of the project shall apply to this agreement. The Contractor shall comply with the requirements of any Fulton County program concerning non-discrimination in contracting.. All work performed within the right of way of the Georgia Department of Transportation and any railroad crossing shall be in accordance with Georgia Department of Transportation regulations, policies and procedures and, where applicable, those of any affected railroad. The Contractor shall comply with all laws, ordinances, codes, rules and regulations bearing on the conduct of the work as specified and the Contractor agrees to indemnify and hold harmless the County, its officers, agents and employees, as well as the Construction Manager and the Program Manager against any claim or liability arising from or based on the violation of any law, ordinance, regulation, order or decree affecting the conduct of the work, whether occasioned by the Contractor, his agents or employees.

00700-8 PERMITS, LICENSES AND BONDS

All permits and licenses necessary for the work shall be secured and paid for by the Contractor. If any permit, license or certificate expires or is revoked, terminated, or suspended as a result of any action on the part of the Contractor, the Contractor shall not be entitled to additional compensation or time. The Contractor shall obtain and keep in force at all times performance and payment bonds payable to Fulton County in penal amounts equal to 100% of the Contract price.

00700-9 TAXES

A. The Contractor shall pay all sales, retail, occupational, service, excise, old age benefit and unemployment compensation taxes, consumer, use and other similar taxes, as well as any other taxes or duties on the materials, equipment, and labor for the work provided by the Contractor which are legally enacted by any municipal, county, state or federal authority, department or agency at the time bids are received, whether or not yet effective. The Contractor shall maintain records pertaining to such taxes and levies as well as payment thereof and shall make the same available to the County at all reasonable times for inspection and copying. The Contractor shall apply for any and all tax exemptions which may be applicable and shall timely request from the County such documents and information as may be necessary to obtain such tax exemptions. The County shall have no liability to the Contractor for payment of any tax from which it is exempt.

B. The Contractor is obligated to comply with all local and State Sales and Use Tax laws. The Contractor shall provide the Owner with documentation to assist the Owner in obtaining sales and/or use tax refunds for eligible machinery and equipment used for the primary purpose of reducing or eliminating air or water pollution as provided for in Chapter 48-8-3 (36) and (37) of the Official Code of Georgia. All taxes shall be paid by the Contractor. All refunds will accrue to the Owner.

Acceptance of the project as complete and final payment will not be made by the Owner until the Contractor has fully complied with this requirement.

00700-10 DELINQUENT CONTRACTORS

The County shall not pay any claim, debt, demand or account whatsoever to any person firm or corporation who is in arrears to the County for taxes. The County shall be entitled to a counterclaim, backcharge, and offset for any such debt in the amount of taxes in arrears, and no assignment or transfer of such debt after the taxes become due shall affect the right of the County to offset any taxes owed against said debt.

00700-11 LIEN WAIVERS

The Contractor shall furnish the County with evidence that all persons who have performed work or furnished materials pursuant to this agreement have been paid in full prior to submitting its

demand for final payment pursuant to this agreement. A final affidavit, Exhibit A, must be completed, and submitted to comply with requirements of 00700-11. In the event that such evidence is not furnished, the County may retain sufficient sums necessary to meet all lawful claims of such laborers and materialmen. The County assumes no obligation nor in any way undertakes to pay such lawful claims from any funds due or that may become due to the Contractor.

00700-12 MEASUREMENT

All items of work to be paid for per unit of measurement shall be subject to inspection, measurement, and confirmation by the Construction Manager.

00700-13 ASSIGNMENT

The Contractor shall not assign any portion of this agreement or moneys due there from (include factoring of receivables) without the prior written consent of the County. The Contractor shall retain personal control and shall provide personal attention to the fulfillment of its obligations pursuant to this agreement. Any assignment without the express written consent of the County shall render this contract voidable at the sole option of the County.

00700-14 FOREIGN CONTRACTORS

In the event that the Contractor is a foreign corporation, partnership, or sole proprietorship, the Contractor hereby irrevocably appoints the Secretary of State of Georgia as its agent for service of all legal process for the purpose of this contract only.

00700-15 INDEMNIFICATION [there are two indemnification clauses, the other is in the Contract Cover Sheet]

The Contractor hereby assumes the entire responsibility and liability for any and all injury to or death of any and all persons, including the Contractor's agents, servants, and employees, and in addition thereto, for any and all damages to property caused by or resulting from or arising out of any act or omission in connection with this contract or the prosecution of work hereunder, whether caused by the Contractor or the Contractor's agents, servants, or employees, or by any of the Contractor's subcontractors or suppliers, and the Contractor shall indemnify and hold harmless the County, the Construction Manager and the Program Manager, or any of their subcontractors from and against any and all loss and/or expense which they or any of them may suffer or pay as a result of claims or suits due to, because of, or arising out of any and all such injuries, deaths and/or damage, irrespective of County or Construction Manager or Program Manager negligence (except that no party shall be indemnified for their own sole negligence). The Contractor, if requested, shall assume and defend at the Contractor's own expense, any suit, action or other legal proceedings arising there from, and the Contractor hereby agrees to satisfy, pay, and cause to be discharged of record any judgment which may be rendered against the County, the Construction Manager and the Program Manager arising there from.

In the event of any such loss, expense, damage, or injury, or if any claim or demand for damages as heretofore set forth is made against the County or the Construction Manager or the Program Manager, the County may withhold from any payment due or thereafter to become due to the Contractor under the terms of this Contract, an amount sufficient in its judgment to protect and indemnify it and the Construction Manager and the Program Manager from any and all claims, expense, loss, damages, or injury; and the County, in its discretion, may require the Contractor to furnish a surety bond satisfactory to the County providing for such protection and indemnity, which bond shall be furnished by the Contractor within five (5) days after written demand has been made therefore. The expense of said Bond shall be borne by the Contractor.

00700-16 SUPERVISION OF WORK AND COORDINATION WITH OTHERS

The Contractor shall supervise and direct the work using the Contractor's best skill and attention. The Contractor shall be solely responsible for all construction methods and procedures and shall coordinate all portions of the work pursuant to the contract subject to the overall coordination of

the Construction Manager. All work pursuant to this agreement shall be performed in a skillful and workmanlike manner.

The County reserves the right to perform work related to the Project with the County's own forces and to award separate contracts in connection with other portions of the project, other work on the site under these or similar conditions of the contract, or work which has been extracted from the Contractor's work by the County.

When separate contracts are awarded for different portions of the project or other work on the site, the term "separate contractor" in the Contract Documents in each case shall mean the contractor who executes each separate County Agreement.

The Contractor shall cooperate with the County and separate contractors in arranging the introduction and storage of materials and equipment and execution of their work, and shall cooperate in coordinating connection of its work with theirs as required by the Contract Documents.

If any part of the Contractor's Work depends for proper execution or results upon the work of the County or any separate contractor, the Contractor shall, prior to proceeding with that portion of the Work, promptly report to the Construction Manager any apparent discrepancies or defects in such other work that render it unsuitable for such proper execution and results **within seven (7) days** of discovery of such discrepancy or defect. Failure of the Contractor to so report in writing shall constitute an acceptance of the County's or separate contractor's work as fit and proper to receive the Work, except as to any defects which may subsequently become apparent in such work by others.

Any costs caused by defective or untimely work shall be borne by the party responsible therefore.

Should the Contractor wrongfully cause damage to the work or property of the County or to other work or property on the site, including the work of separate contractors, the Contractor shall promptly remedy such damage at the Contractor's expense.

Should the Contractor be caused damage by any other contractor on the Project, by reason of such other contractor's failure to perform properly his contract with the County, no action shall lie against the County or the Construction Manager inasmuch as the parties to this agreement are the only beneficiaries hereof and there are no third party beneficiaries and neither the County nor the Construction Manager shall have liabilities therefore, but the Contractor may assert his claim for damages solely against such other contractor. The Contractor shall not be excused from performance of the contract by reason of any dispute as to damages with any other contractor or third party.

Where the Work of this Contract shall be performed concurrently in the same areas as other construction work, the Contractor shall coordinate with the Construction Manager and the separate contractors in establishing mutually acceptable schedules and procedures that shall permit all jobs to proceed with minimum interference.

If a dispute arises between the Contractor and separate contractors as to their responsibility for cleaning up, the County may clean up and charge the cost thereof to the Contractor or contractors responsible therefore as the County shall determine to be just.

00700-17 ADMINISTRATION OF CONTRACT

The Construction Manager shall provide administration services as hereinafter described.

For the administration of this Contract, the Construction Manager shall serve as the County's primary representative during design and construction and until final payment to the Contractor is due. The Construction Manager shall advise and consult with the County and the Program Manager. The primary point of contact for the Contractor shall be the Construction Manager. All correspondence from the Contractor to the County shall be forwarded through the Construction Manager. Likewise, all correspondence and instructions to the Contractor shall be forwarded through the Construction Manager.

The Construction Manager will determine in general that the construction is being performed in accordance with design and engineering requirements, and will endeavor to guard the County against defects and deficiencies in the Work.

The Construction Manager will not be responsible for or have control or charge of construction means, methods, techniques, sequences, or procedures, or for safety precautions and programs in connection with the Work, nor will it be responsible for the Contractor's failure to carry out the Work in accordance with the Contract Documents. The Construction Manager will not be responsible for or have control or charge over the acts or omissions of the Contractor, its engineers, consultants, subcontractors, or any of their agents or employees, or any other persons performing the Work.

Based on the Construction Manager's observations regarding the Contractor's Applications for Payment, the Construction Manager shall determine the amounts owing to the Contractor, in accordance with the payment terms of the Contract, and shall issue Certificates for Payment in such amount to the County. Prior to the Contractor submitting any Application for Payment, the Contractor and Construction Manager shall perform a joint field investigation of the work to mutually agree to items and quantities that will be approved on the Application for Payment.

The Construction Manager shall render interpretations necessary for the proper execution or progress of the Work. Either party to the Contract may make written requests to the Construction Manager for such interpretations.

Claims, disputes and other matters in question between the Contractor and the County relating to the progress of the Work or the interpretation of the Contract Documents shall be referred to the Construction Manager for interpretation.

All interpretations of the Construction Manager shall be consistent with the intent of and reasonably inferable from the Contract Documents and shall be in writing or in graphic form.

Except as otherwise provided in this Contract, the Construction Manager shall issue a decision on any disagreement concerning a question of fact arising under this Contract. The Construction Manager shall reduce the decision to writing and mail or otherwise furnish a copy thereof to the Contractor. The decision of the Construction Manager shall be final and conclusive unless, within thirty (30) days from the date of receipt of such copy, the Contractor files a written appeal with the Director of Public Works and mails or otherwise furnishes the Construction Manager a copy of such appeal. The decision of the Director of Public Works or the Director's duly authorized representative for the determination of such appeals shall be final and conclusive. Such final decision shall not be pleaded in any suit involving a question of fact arising under this Contract, provided such is not fraudulent, capricious, arbitrary, so grossly erroneous as necessarily implying bad faith, or is not supported by substantial evidence. In connection with any appeal proceeding under this Article, the Contractor shall be afforded an opportunity to be heard and to offer evidence in support of Contractor's appeal. Pending any final decision of a dispute hereunder, the Contractor shall proceed diligently with the performance of the Contract as directed by the Construction Manager.

The Construction Manager shall have authority to reject Work which does not conform to the Contract Documents. Whenever, in the Construction Manager's opinion, it is considered necessary or advisable for the implementation of the intent of the Contract Documents, the County shall have authority to require special inspection or testing of the Work whether or not such Work be then fabricated, installed or completed. The Contractor shall pay for such special inspection or testing if the Work so inspected or tested is found not to comply with the requirements of the contract; the County shall pay for special inspection and testing if the Work is found to comply with the contract. Neither the Construction Manager's authority to act under this Subparagraph, nor any decision made by the Construction Manager in good faith either to exercise or not to exercise such authority, shall give rise to any duty or responsibility of the Construction Manager to the Contractor, any subcontractor, any of their agents or employees, or any other person performing any of the Work.

The Contractor shall provide such shop drawings, product data, and samples as may be required by the Construction Manager and/or as required by these Contract Documents.

The Construction Manager shall conduct inspections to determine Substantial Completion and Final Completion, and shall receive and review written warranties and related documents required by the Contract Documents and assembled by the Contractor. The Construction Manager shall approve and issue Certificates for Payment upon compliance with Substantial and Final Completion requirements indicated in General Conditions 00700-81, 00700-82, 00700-84 and 00700-85 of this Agreement.

Except as provided in General Condition 00700-48*,* the Contractor shall not be relieved from the Contractor's obligations to perform the work in accordance with the contract documents by the activities or duties of the County or any of its officers, employees, or agents, including inspections, tests or approvals, required or performed pursuant to this agreement.

00700-18 RESPONSIBILITY FOR ACTS OF EMPLOYEES

The Contractor shall employ only competent and skilled personnel. The Contractor shall, upon demand from the Construction Manager, immediately remove any superintendent, foreman or workman whom the Construction Manager may consider incompetent or undesirable.

The Contractor shall be responsible to the County for the acts and omissions of the Contractor's employees, subcontractors, and agents as well as any other persons performing work pursuant to this agreement for the Contractor.

00700-19 LABOR, MATERIALS, SUPPLIES, AND EQUIPMENT

Unless otherwise provided in this agreement, the Contractor shall make all arrangements with necessary support agencies and utility companies, provide and pay for all labor, materials, equipment, tools, construction equipment and machinery, water, heat, utilities, transportation, and other facilities and services necessary for the execution and completion of the work.

00700-20 DISCIPLINE ON WORK SITE

The Contractor shall enforce strict discipline and good order among its employees and subcontractors at all times during the performance of the work, to include compliance with the Fulton County Drug Free Work Place Policy. The Contractor shall not employ any subcontractor who is not skilled in the task assigned to it. The Construction Manager may, by written notice, require the Contractor to remove from the work any subcontractor or employee deemed by the Construction Manager to be incompetent.

00700-21 HOURS OF OPERATION

All work at the construction site shall be performed during regular business hours of the Fulton County government, except upon the Construction Manager's prior written consent to other work hours. It is further understood that the Contractor's construction schedule is based on a normal 40 hours, five day work week, less Fulton County-recognized holidays. Contractors work schedule shall not violate Fulton County Noise Ordinance by working hours inconsistent with the Fulton County Noise Ordinance. The County's current noise ordinance or other applicable ordinance shall govern. If working within incorporated areas or within GDOT right of way additional time restrictions per jurisdiction shall apply. If the Contractor desires to work in excess of this limit, the Contractor shall submit a written request to the Construction Manager, a minimum of five days prior to the desired work date.

00700-22 FAMILIARITY WITH WORK CONDITIONS

The Contractor shall take all steps necessary to ascertain the nature and location of the work and the general and local conditions which may affect the work or the cost thereof. The Contractor's failure to fully acquaint itself with the conditions which may affect the work, including, but not limited to conditions relating to transportation, handling, storage of materials, availability of utilities, labor, water, roads, weather, topographic and subsurface conditions, other separate contracts to be entered into by the County relating to the project which may affect the work of the

Contractor, applicable provisions of law, and the character and availability of equipment and facilities necessary prior to and during the performance of the work shall not relieve the Contractor of its responsibilities pursuant to this agreement and shall not constitute a basis for an equitable adjustment of the contract terms. The County reserves the right to perform with its own forces or to contract with other entities for other portions of the project work, in which case the Contractor's responsibility to assure its familiarity with work conditions hereunder shall include all coordination with such other contractors and the County necessary to insure that there is no interference between contractors as will delay or hinder any contractor in its prosecution of work on the project. The County assumes no responsibility for any understandings or representations concerning conditions of the work made by any of its officers, agents, or employees prior to the execution of this agreement.

00700-23 RIGHT OF ENTRY

The County reserves the right to enter the site of the work by such agent, including the Construction Manager, as it may elect for the purpose of inspecting the work or installing such collateral work as the County may desire. The Contractor shall provide safe facilities for such access so that the County and its agents may perform their functions.

00700-24 NOTICES

Any notice, order, instruction, claim or other written communication required pursuant to this agreement shall be deemed to have been delivered or received as follows:

Upon personal delivery to the Contractor, its authorized representative, or the Construction Manager on behalf of the County. Personal delivery may be accomplished by in-person hand delivery or bona fide overnight express service.

Three days after depositing in the United States mail a certified letter addressed to the Contractor or the Construction Manager for the County. For purposes of mailed notices, the County's mailing address shall be 141 Pryor Street, 6th Floor, Atlanta, Georgia 30303, or as the County shall have otherwise notified the Contractor. The Contractor's mailing address shall be the address stated in its proposal or as it shall have most recently notified the Construction Manager in writing.

00700-25 SAFETY

A. SAFETY, HEALTH AND LOSS PREVENTION

The Contractor shall be responsible for implementing a comprehensive project-specific safety, health and loss prevention program and employee substance abuse program for this project. All Sub-Contractors must either implement their own program or follow the Contractor's safety, health and loss prevention program and employee substance abuse program.

The Contractor's safety, health and loss prevention program and employee substance abuse program must meet or exceed all governmental regulations (OSHA, EPA, DOT, State, local), and any other specific Fulton County requirements

B. COUNTY'S SAFETY, HEALTH, AND LOSS PREVENTION PROCESS GUIDELINES AND REQUIREMENTS

The County and its agents reserve the right, but assume no duty, to establish and enforce safety, health, and loss prevention guidelines and to make the appropriate changes in the guidelines, for the protection of persons and property and to review the efficiency of all protective measures taken by the Contractor. The Contractor shall comply with all safety, health, and loss prevention process guidelines and requirements and changes made by the County or its agent(s). The issuance of any such guidelines or changes by the County or its agent(s) shall not relieve the Contractor of its duties and responsibilities under this Agreement, and the County or its agent(s) shall not thereby assume, nor be deemed to have assumed, any such duties or responsibilities of the Contractor.

C. COMPLIANCE OF WORK, EQUIPMENT, AND PROCEDURES WITH ALL APPLICABLE LAWS and REGULATIONS

All Work, whether performed by the Contractor or its Sub-Contractors of any tier, or anyone directly or indirectly employed by any of them, and all equipment, appliances, machinery, materials, tools and like items incorporated or used in the Work, shall be in compliance with and conform to:

1. All applicable laws, ordinances, rules, regulations and orders of any public, quasi-public or other governmental authority relating to the safety of persons and their protection against injury, specifically including, but in no event limited to, the Federal Occupational Safety and Health Act of 1970, as amended, and all rules and regulations now or hereafter in effect pursuant to said Act.

2. All rules, regulations, and requirements of the County or its agent(s) and its insurance carriers relating there to. In the event of a conflict or differing requirements the more stringent shall govern.

D. PROTECTION OF THE WORK

1. The Contractor shall, throughout the performance of the Work, maintain adequate and continuous protection of all Work and temporary facilities against loss or damage from whatever cause, shall protect the property of the County and third parties from loss or damage from whatever cause arising out of the performance of the Work, and shall comply with the requirements of the County or its agent(s) and its insurance carriers, and with all applicable laws, codes, rules and regulations, (as same may be amended) with respect to the prevention of loss or damage to property as a result of fire or other hazards.

2. The County or its agent(s) may, but shall not be required to, make periodic inspections of the Project work area. In such event, however, the Contractor shall not be relieved of its aforesaid responsibilities and the County or its agent(s) shall not assume, nor shall it be deemed to have assumed, any responsibility otherwise imposed upon the assurance of Contractor by this Agreement.

E. SAFETY EQUIPMENT

1. The Contractor shall provide to each worker on the Project work area the proper safety equipment for the duties being performed by that worker and will not permit any worker on the Project work area who fails or refuses to use the same. The County or its agent shall have the right, but not the obligation, to order the removal of a worker from the Project work site for his/her failure to comply with safe practices or substance abuse policies.

F. EMERGENCIES

1. In any emergency affecting the safety of persons or property, or in the event of a claimed violation of any federal or state safety or health law or regulation, arising out of or in any way connected with the Work or its performance, the Contractor shall act immediately to prevent threatened damage, injury or loss and to remedy said violation. Failing such action the County or its agent(s) may immediately take whatever steps it deems necessary including, but not limited to, suspending the Work as provided in this Agreement.

2. The County or its agent(s) may offset any and all costs or expenses of whatever nature, including attorneys' fees, paid or incurred by the County or its agent(s) (whether such fees are for in-house counsel or counsel retained by the County or its agent), in taking the steps authorized by Section 00700-25(G) (1) above against any sums then or thereafter due to the Contractor. The Contractor shall defend, indemnify and hold the County, its officers, agents, and employees harmless against any and all costs or expenses caused by or arising from the exercise by the County of its authority to act in an emergency as set out herein. If the Contractor shall be entitled to any additional compensation or extension of time change order on account of emergency work not due to the fault or neglect of the Contractor or its Sub-Contractors, such additional

compensation or extension of time shall be determined in accordance with General Condition 00700-52 and General Condition 00700-87 of this Agreement.

G. SUSPENSION OF THE WORK

1. Should, in the judgment of the County or its agent(s), the Contractor or any Sub-Contractor fail to provide a safe and healthy work place, the County or its agent shall have the right, but not the obligation, to suspend work in the unsafe areas until deficiencies are corrected. All costs of any nature (including, without limitation, overtime pay, liquidated damages or other costs arising out of delays) resulting from the suspension, by whomsoever incurred, shall be borne by the Contractor.

2. Should the Contractor or any Sub-Contractor fail to provide a safe and healthy work place after being formally notified in writing by the County or its agents of such non-compliance, the contract may be terminated following the termination provision of the contract.

H. CONTRACTOR'S INDEMNITY OF THE COUNTY FOR CONTRACTOR'S NON-COMPLIANCE WITH SAFETY PROGRAM

1. The Contractor recognizes that it has sole responsibility to assure its Safety Program is implemented and to assure its construction services are safely provided. The Contractor shall indemnify, defend and hold the County and its agents harmless, from and against any and all liability (whether public or private), penalties (contractual or otherwise), losses, damages, costs, attorneys' fees, expenses, causes of action, claims or judgments resulting, either in whole or in part, from any failure of the Contractor, its Sub-Contractors of any tier or anyone directly or indirectly employed by any of them or for whose acts any of them may be liable, to comply with the safety requirements of the contract. The Contractor shall not be relieved of its responsibilities under the safety requirements of the Contract should the County or its agent(s) act or fail to act pursuant to its rights hereunder.

2. The Contractor shall not raise as a defense to its obligation to indemnify under this Subparagraph I any failure of those indemnified hereunder to assure Contractor operates safely, it being understood and agreed that no such failure shall relieve the Contractor from its obligation to assure safe operations or from its obligation to so indemnify. The Contractor also hereby waives any rights it may have to seek contribution, either directly or indirectly, from those indemnified hereunder.

3. In any and all claims against those indemnified hereunder by any employee of the Contractor, any Sub-Contractor of any tier or anyone directly or indirectly employed by any of them or anyone for whose acts any of them may be liable, the indemnification obligation under this Subparagraph I shall not be limited in any way as to the amount or type of damages, compensation or benefits payable by or for the Contractor or any Sub-Contractor of any tier under any workers' compensation act, disability benefit or other employee benefit acts.

<u>00700-26 BLASTING AND EXCAVATION</u>

The Contractor acknowledges that it is fully aware of the contents and requirements of O.C.G.A. § 25-9-1 through 25-9-12 concerning blasting and excavation near underground gas pipes and facilities and shall fully comply therewith.

<u>00700-27 HIGH VOLTAGE LINES</u>

The Contractor acknowledges that it is fully aware of the contents and requirements O.C.G.A. § 46-3-30 through 46-3-39 concerning safeguards against contact with high voltage lines, and the Contractor shall fully comply with said provisions.

<u>00700-28 SCAFFOLDING AND STAGING</u>

The Contractor acknowledges that it is the person responsible for employing and directing others to perform labor within the meaning of O.C.G.A. § 34-1-1 and agrees to comply with said provisions.

00700-29 CLEAN-UP

The Contractor shall clean up all refuse, rubbish, scrap materials, and debris caused by its operations to the end that the site of the work shall present a neat, orderly and workmanlike appearance at all times.

00700-30 PROTECTION OF WORK

The Contractor shall be responsible for maintenance and protection of the work, which shall include any County-furnished supplies, material, equipment, until final completion of this agreement and acceptance of the work as defined herein. Any portion of the work suffering injury, damage or loss shall be considered defective and shall be corrected or replaced by the Contractor without additional cost to the County.

00700-31 REJECTED WORK

The Contractor shall promptly remove from the project all work rejected by the Construction Manager for failure to comply with the contract documents and the Contractor shall promptly replace and re-execute the work in accordance with the contract documents and without expense to the County. The Contractor shall also bear the expense of making good all work of other Contractors destroyed or damaged by such removal or replacement.

00700-32 DEFECTIVE WORK

If the Contractor defaults or neglects to carry out any portion of the work in accordance with the contract documents, and fails within three days after receipt of written notice from the Construction Manager to commence and continue correction of such default or neglect with diligence and promptness, the County may, after three days following receipt by the Contractor of an additional written notice and without prejudice to any other remedy the County may have, make good such deficiencies and complete all or any portion of any work through such means as the County may select, including the use of a separate Contractor. In such case, an appropriate change order shall be issued deducting from the payments then or thereafter due the Contractor the cost of correcting such deficiencies. In the event the payments then or thereafter due the Contractor are not sufficient to cover such amount, the Contractor shall pay the difference to the County on demand.

The County may, at its option, accept defective or nonconforming work instead of requiring its removal or correction. In such case, a change order shall be issued reducing the price due the contractor to the extent appropriate and equitable. Such contract price adjustment shall be effected whether or not final payment has been made.

00700-33 WARRANTY OF NEW MATERIALS

The Contractor warrants to the County that all materials and equipment furnished under this contract will be new unless otherwise specified, and the Contractor further warrants that all work will be of good quality, free from faults and defects, and in conformance with the contract documents. The warranty set forth in this paragraph shall survive final acceptance of the work.

00700-34 CONTRACTOR'S WARRANTY OF THE WORK

If within one year after the date of issuance of the certificate of final payment pursuant to General Condition 84, or within such longer period of time as may be prescribed by law or by the term of any applicable special warranty required by the contract documents, any of the work is found to be defective or not in accordance with the contract documents, the Contractor shall correct such work promptly after receipt of written notice from the Construction Manager to do so. This obligation shall survive both final payment for the work and termination of the contract.

00700-35 ASSIGNMENT OF MANUFACTURERS' WARRANTIES

Without limiting the responsibility or liability of the Contractor pursuant to this agreement, all warranties given by manufacturers on materials or equipment incorporated in the work are hereby assigned by the Contractor to the County. If requested, the Contractor shall execute formal

assignments of said manufacturer's warranties to the County. All such warranties shall be directly enforceable by the County.

00700-36 WARRANTIES IMPLIED BY LAW

The warranties contained in this agreement, as well as those warranties implied by law, shall be deemed cumulative and shall not be deemed alternative or exclusive. No one or more of the warranties contained herein shall be deemed to alter or limit any other.

00700-37 STOP WORK ORDERS

In the event that the Contractor fails to correct defective work as required by the contract documents or fails to carry out the work in accordance with contract documents, the Construction Manager, in writing, may order the Contractor to stop work until the cause for such order has been eliminated. This right of the County to stop work shall not give rise to any duty on the part of the County or the Construction Manager to execute this right for the benefit of the Contractor or for any other person or entity.

00700-38 TERMINATION FOR CAUSE

If the Contractor is adjudged bankrupt, makes a general assignment for the benefit of creditors, suffers the appointment of a receiver on account of its insolvency, fails to supply sufficient properly skilled workers or materials, fails to make prompt payment to subcontractors or materialmen, disregards laws, ordinances, rules, regulations, or orders of any public authority having jurisdiction, fails to diligently prosecute the work, or is otherwise guilty of a material violation of this agreement and fails within seven days after receipt of written notice to commence and continue correction of such default, neglect, or violation with diligence and promptness, the County may, after seven days following receipt by the Contractor of an additional written notice and without prejudice to any other remedy the County may have, terminate the employment of the Contractor and take possession of the site as well as all materials, equipment, tools, construction equipment and machinery thereon. The County may finish the work by whatever methods the County deems expedient. In such case, the Contractor shall not be entitled to receive any further payment until the work is completed. If the unpaid balance of the contract price exceeds the cost of completing the work, such excess shall be paid to the Contractor. If such costs exceed the unpaid balance, the Contractor shall pay the difference to the County on demand. This obligation for payment shall survive the termination of the contract. Termination of this agreement pursuant to this paragraph may result in disqualification of the Contractor from bidding on future County contracts.

00700-39 TERMINATION FOR CONVENIENCE

The County may, at any time upon written notice to the Contractor, terminate the whole or any portion of the work for the convenience of the County. The effective data of the terminations shall be provided in the written notice. Said termination shall be without prejudice to any right or remedy of the County provided herein. In addition, in the event this agreement has been terminated due to the default of the Contractor, and if it is later determined that the Contractor was not in default pursuant to the provisions of this agreement at the time of termination, then such termination shall be considered a termination for convenience pursuant to this paragraph.

00700-40 TERMINATION FOR CONVENIENCE - PAYMENT

If the Contract is terminated for convenience by the Owner as provided in this article, Contractor will be paid compensation for those services actually performed as approved by the Owner or his representative. Partially completed tasks will be compensated for based on a signed statement of completion prepared by the Project Manager and submitted to the Contractor which shall itemize each task element and briefly state what work has been completed and what work remains to be done. Contractor shall also be paid for reasonable costs for the orderly filing and closing of the project.

00700-41 TERMINATION FOR CONVENIENCE - PAYMENT LIMITATIONS

Except for normal spoilage, and except to the extent that the County shall have otherwise expressly assumed the risk of loss, there shall be excluded from the amounts payable to the Contractor the fair value, as determined by the Construction Manager, of property which is destroyed, lost, stolen or damaged so as to become undeliverable to the County or to another buyer.

00700-42 COST TO CURE

If the County terminates for cause the whole or any part of the work pursuant to this agreement, then the County may procure upon such terms and in such manner as the Construction Manager may deem appropriate, supplies or services similar to those so terminated, and the Contractor shall be liable to the County for any excess costs for such similar supplies or services. The Contractor shall continue the performance of this agreement to the extent not terminated hereunder.

00700-43 ATTORNEY'S FEES

Should the Contractor default pursuant to any of the provisions of this agreement, the Contractor and its surety shall pay to the County such reasonable attorney's fees as the County may expend as a result thereof and all costs, expenses, and filing fees incidental thereto.

00700-44 CONTRACTOR'S RESPONSIBILITIES UPON TERMINATION

After receipt of a notice of termination from the County, and except as otherwise directed by the Construction Manager, the Contractor shall:

1. Stop work under the contract on the date and to the extent specified in the notice of termination;

2. Place no further orders or subcontracts for materials, services or facilities, except as may be necessary for completion of such portion of the work under the agreement as is not terminated;

3. Terminate all orders and subcontracts to the extent that they relate to the performance of work terminated by the notice of termination;

4. Assign to the County in the manner, at the times, and to the extent directed by the Construction Manager, all of the rights, title and interest of the Contractor under the orders and subcontracts so terminated, in which case the County shall have the right, at its discretion, to settle or pay any and all claims arising out of the termination of such orders or subcontracts;

5. Settle all outstanding liabilities and all claims arising out of such termination of orders and subcontracts with the approval or ratification of the Construction Manager, to the extent the Construction Manager may require, which approval or ratification shall be final for all purposes;

6. Transfer title and deliver to the entity or entities designated by the Construction Manager, in the manner, at the times, and to the extent, if any, directed by the Construction Manager, and to the extent specifically produced or specifically acquired by the Contractor for the performance of such portion of the work as has been terminated:

   a. The fabricated or un-fabricated parts, work, and progress, partially completed supplies, and equipment, materials, parts, tools, dyes, jigs, and other fixtures, completed work, supplies, and other material produced as a part of or acquired in connection with the performance of the work terminated by the notice of termination; and

   b. The completed or partially completed plans, drawings, information, and other property to the work.

7. Use its best efforts to sell in the manner, at the times, to the extent, and at the prices directed or authorized by the Construction Manager, any property described in Section 6 of this paragraph, provided, however, that the Contractor shall not be required to extend credit to any

buyer and further provided that the proceeds of any such transfer or disposition shall be applied in reduction of any payments to be made by the County to the Contractor pursuant to this agreement.

8. Complete performance of such part of the work as shall not have been terminated by the notice of termination; and

9. Take such action as may be necessary, or as the Construction Manager may direct, for the protection and preservation of the property related to the agreement which is in the possession of the Contractor and in which the County has or may acquire an interest.

00700-45 RECORDS

The Contractor shall preserve and make available to the County all of its records, books, documents and other evidence bearing on the costs and expenses of the Contractor and any subcontractor pursuant to this agreement upon three days advance notice to the Contractor.

00700-46 DEDUCTIONS

In arriving at any amount due the Contractor pursuant to the terms of this agreement, there shall be deducted all liquidated damages, advance payments made to the Contractor applicable to the termination portion of the contract, the amount of any claim which the County may have against the Contractor, the amount determined by the Construction Manager to be necessary to protect the County against loss due to outstanding potential liens or claims, and the agreed price of any materials acquired or sold by the Contractor and not otherwise recovered by or credited to the County.

00700-47 REIMBURSEMENT OF THE COUNTY

In the event of termination, the Contractor shall refund to the County any amount paid by the County to the Contractor in excess of the costs properly reimbursable to the Contractor.

00700-48 SUSPENSION, INTERRUPTION, DELAY, DAMAGES

The Contractor shall be entitled to only those damages and that relief from termination by the County as specifically set forth in this agreement. The Construction Manager may issue a written order requiring the Contractor to suspend, delay or interrupt all or any part of the work for such period of time as the County may determine to be appropriate for the convenience of the County. If the performance of the work is interrupted for an unreasonable period of time by an act of the County or any of its officers, agents, employees, contractors, or consultants in the administration of this agreement, an equitable adjustment shall be made for any increase in the Contractor's costs of performance and any increase in the time required for performance of the work necessarily caused by the unreasonable suspension, delay, or interruption. Any equitable adjustment shall be reduced to writing and shall constitute a modification to this agreement. In no event, however, shall an equitable adjustment be made to the extent that performance of this agreement would have been suspended, delayed or interrupted by any other cause, including the fault or negligence of the Contractor. No claim for an equitable adjustment pursuant to this paragraph shall be permitted before the Contractor shall have notified the Construction Manager in writing of the act or failure to act involved, and no claim shall be allowed unless asserted in writing to the Construction Manager within ten days after the termination of such suspension, delay or interruption.

00700-49 COMMENCEMENT AND DURATION OF WORK

The County may issue a Notice to Proceed at any time within 120 days following execution of the contract by the County. The Contractor shall commence work pursuant to this agreement within ten days of mailing or delivery of written notice to proceed. The Contractor shall diligently prosecute the work to completion within the time specified therefore in the Agreement. The capacity of the Contractor's construction and manufacturing equipment and plan, sequence and method of operation and forces employed, including management and supervisory personnel, shall be such as to insure completion of the work within the time specified in the Agreement. The Contractor and County hereby agree that the contract time for completion of the work is

reasonable taking into consideration the average climatic conditions prevailing in the locality of the work and anticipated work schedules of other contractors whose activities are in conjunction with or may affect the work under this contract.

00700-50 TIME OF THE ESSENCE

All time limits stated in this agreement are of the essence of this contract.

00700-51 IMPACT DAMAGES

Except as specifically provided pursuant to a stop work order or change order, the Contractor shall not be entitled to payment or compensation of any kind from the County for direct or indirect or impact damages including, but not limited to, costs of acceleration arising because of delay, disruption, interference or hindrance from any cause whatsoever whether such delay, disruption, interference or hindrance is reasonable or unreasonable, foreseeable or unforeseeable, or avoidable, provided, however, that this provision shall not preclude the recovery of damages by the Contractor for hindrances or delays due solely to fraud or bad faith on the part of the County, its agents, or employees. The Contractor shall be entitled only to extensions in the time required for performance of the work as specifically provided in the contract.

00700-52 DELAY

The Contractor may be entitled to an extension of the contract time, but not an increase in the contract price or damages, for delays arising from unforeseeable causes beyond the control and without the fault or negligence of the Contractor or its subcontractors for labor strikes, acts of God, acts of the public enemy, acts of the state, federal or local government in its sovereign capacity, by acts of another separate contractor, or by an act or neglect of the County.

00700-53 INCLEMENT WEATHER

The Contractor shall not be entitled to an extension of the contract time due to normal inclement weather. Unless the Contractor can substantiate to the satisfaction of the Construction Manager that there was greater than normal inclement weather and that such greater than normal inclement weather actually delayed the work, the Contractor shall not be entitled to an extension of time therefore. The following shall be considered the normal inclement weather days for each month listed, and extensions of time shall be granted in increments of not less than one half day only for inclement weather in excess of the days set out.

January	10 days
February	10 days
March	7 days
April	6 days
May	4 days
June	3 days
July	4 days
August	2 days
September	2 days
October	3 days
November	6 days
December	9 days

00700-54 DELAY - NOTICE AND CLAIM

The Contractor shall not receive an extension of time unless a Notice of Delay is filed with the Construction Manager within ten days of the first instance of such delay, disruption, interference or hindrance and a written Statement of the Claim is filed with the Construction Manager within 20

days of the first such instance. In the event that the Contractor fails to comply with this provision, it waives any claim which it may have for an extension of time pursuant to this agreement.

00700-55 STATEMENT OF CLAIM - CONTENTS

The Statement of Claim referenced in Article 00700-54 shall include specific information concerning the nature of the delay, the date of commencement of the delay, the construction activities affected by the delay, the person or organization responsible for the delay, the anticipated extent of the delay, and any recommended action to avoid or minimize the delay.

00700-56 WORK BEHIND SCHEDULE, REMEDY BY CONTRACTOR

If the work actually in place falls behind the currently updated and approved schedule, and it becomes apparent from the current schedule that work will not be completed within the contract time, the Contractor agrees that it will, as necessary, or as directed by the Construction Manager, take action at no additional cost to the County to improve the progress of the work, including increasing manpower, increasing the number of working hours per shift or shifts per working day, increasing the amount of equipment at the site, and any other measure reasonably required to complete the work in a timely fashion.

00700-57 DILIGENCE

The Contractor's failure to substantially comply with the requirements of the preceding paragraph may be grounds for determination by the County that the Contractor is failing to prosecute the work with such diligence as will insure its completion within the time specified. In such event, the County shall have the right to furnish, from its own forces or by contract, such additional labor and materials as may be required to comply with the schedule after 48 hours written notice to the Contractor, and the Contractor shall be liable for such costs incurred by the County.

00700-58 SET-OFFS

Any monies due to the Contractor pursuant to the preceding paragraph of this agreement may be deducted by the County against monies due from the County to the Contractor.

00700-59 REMEDIES CUMULATIVE

The remedies of the County under Articles 00700-56, 00700-57, and 00700-58 are in addition to and without prejudice to all of the rights and remedies of the County at law, in equity, or contained in this agreement.

00700-60 TITLE TO MATERIALS

No materials or supplies shall be purchased by the Contractor or by any Subcontractor subject to any chattel mortgage or under a conditional sales contract or other agreement by which any interest is retained by the seller. The Contractor hereby warrants that it has good and marketable title to all materials and supplies used by it in the work, and the Contractor further warrants that all materials and supplies shall be free from all liens, claims, or encumbrances at the time of incorporation in the work.

00700-61 INSPECTION OF MATERIALS

All materials and equipment used in the construction of the project shall be subject to adequate inspection and testing in accordance with accepted standards and in accordance with the requirements of the contract documents. Additional tests performed after the rejection of materials or equipment shall be at the Contractor's expense.

00700-62 CONSTRUCTION MANAGER'S PRESENCE DURING TESTING

All tests performed by the Contractor shall be witnessed by the Construction Manager unless the requirement therefore is waived in writing. The Construction Manager shall be given a minimum of 24 hours prior notice of all testing requiring the Construction Manager's presence. The Construction Manager may perform additional tests on materials previously tested by the Contractor, and the Contractor shall furnish samples for this purpose as requested.

00700-63 MATERIALS INCORPORATED IN WORK

The Contractor shall furnish all materials and equipment to be incorporated in the work. All such materials or equipment shall be new and of the highest quality available. Manufactured materials and equipment shall be obtained from sources which are currently manufacturing such materials, except as otherwise specifically approved by the Construction Manager.

00700-64 STORAGE OF MATERIALS

Materials and equipment to be incorporated in the work shall be stored in such a manner as to preserve their quality and fitness for the work and to facilitate inspection.

00700-65 PAYROLL REPORTS

The Contractor may be required to furnish payroll reports to the Construction Manager as required by the Owner Controlled Insurance Program.

00700-66 CONTRACTORS' REPRESENTATIVE

Before beginning work, the Contractor shall notify the Construction Manager in writing of one person within its organization who shall have complete authority to supervise the work, receive orders from the Construction Manager, and represent the Contractor in all matters arising pursuant to this agreement. The Contractor shall not remove its representative without first designating in writing a new representative. The Contractor's representative shall normally be present at or about the site of work while the work is in progress. When neither the Contractor nor its representative is present at the work site, the superintendent, foreman, or other of the Contractor' employee in charge of the work shall be an authorized representative of the Contractor.

00700-67 SPECIALTY SUB-CONTRACTORS

The Contractor may utilize the services of specialty subcontractors on those parts of the project which, under normal contracting practices, are performed by specialty subcontractors. The Contractor shall not award more than seventy-five percent of the work to subcontractors.

00700-68 INSPECTION BY THE CONSTRUCTION MANAGER

All work pursuant to this agreement shall be subject to inspection by the Construction Manager for conformity with contract drawings and specifications. The Contractor shall give the Construction Manager reasonable advance notice of operations requiring special inspection of a portion of the work.

00700-69 WORK COVERED PRIOR TO CONSTRUCTION MANAGER'S INSPECTION

In the event that work is covered or completed without the approval of the Construction Manager, and such approval is required by the specifications or required in advance by the Construction Manager, the Contractor shall bear all costs involved in inspection notwithstanding conformance of such portion of the work to the contract drawings and specifications.

00700-70 SCHEDULING OF THE WORK

The work of this contract shall be planned, scheduled, executed, and reported as required by the Contract Documents.

00700-71 PROGRESS ESTIMATES

The Contractor shall prepare a written report for the Construction Manager's approval, on County forms, of the total value of work performed and materials and equipment obtained to the date of submission. Such a report must accompany each request for a progress payment and is subject to review and approval by the Construction Manager. Approval of a progress estimate or tendering of a progress payment shall not be considered an approval or acceptance of any work performed, and all estimates and payments shall be subject to correction in subsequent estimates. Progress payments shall be made for all completed activities and for materials suitably stored on-site.

00700-72 PROGRESS PAYMENTS

Upon approval of each monthly estimate of work performed and materials furnished, the Construction Manager shall approve payment to the Contractor for the estimated value of such work, materials, and equipment, less the amount of all prior payments and any liquidated damages. The Contractor will be paid 100 percent, less retainage, of the cost of materials received and properly stored on-site but not incorporated into the work. Payments for materials or equipment stored on the site shall be conditioned upon submission by the Contractor of bills of sale to establish the County's title to such materials or equipment. The Contractor's request for payment shall provide sufficient detail as to the work completed or materials purchased for which payment is requested to permit meaningful review by the Construction Manager.

00700-73 TIME OF PAYMENT

The Contractor will be paid within 45 days following receipt of an approved Progress Estimate. The Contractor expressly agrees that the payment provisions within this Contract shall supersede the rates of interest, payment periods, and contract and subcontract terms provided for under the Georgia Prompt Pay Act, O.C.G.A. §13-11-1 et seq., and that the rates of interest, payment periods, and contract and subcontract terms provided for under the Prompt Pay Act shall have no application to this Contract. The County shall not be liable for any late payment interest or penalty.

00700-74 RETAINAGE

The County shall retain from each progress payment ten percent of the estimated value of the work performed until the progress payments, including retainage, total 50 percent of the contract price. If a contract includes two or more projects or assignments that have been separately priced and have separate budgets, and the performances of such projects or assignments are not related to or dependent upon the performance of any other, the 50 per cent limit shall be based upon the price for each individual project or assignment. Thereafter, no further retainage shall be withheld so long as the Contractor is making satisfactory progress to insure completion of the work within the time specified therefore. The County may reinstate the ten percent retainage in the event the Construction Manager determines that the Contractor is not making satisfactory progress to complete the work within the time specified in this agreement or in the event that the Construction Manager provides a specific cause for such withholding. The County may also withhold retainage upon substantial completion of the work as provided in O.C.G.A. §13-10-81(c). Interest may be paid upon the retainage in accordance with Georgia law.

00700-75 PAYMENT OF SUBCONTRACTORS

The Contractor shall promptly pay each subcontractor upon the receipt of payment from the County. Such payment shall be made from the amount paid to the Contractor pursuant to the subcontractor's work. The Contractor shall also maintain the records of the percentage retained from payments to the Contractor pursuant to such subcontractor's work. The Contractor shall procure agreements from each subcontractor requiring each subcontractor to pay their subcontractors, agents and employees in a similar manner. The County reserves the right to inquire of any subcontractor, supplier, materialmen, or subconsultant, the status of any indebtedness of the Contractor. The County further reserves the right to require the Contractor to designate on each instrument of payment exceeding $400.00 to subcontractors, suppliers, materialmen, and subconsultants that such payment is on account of the work under this Contract.

00700-76 COUNTY'S RESPONSIBILITIES TO SUBCONTRACTORS

Neither the County nor the Construction Manager shall have any obligation to pay any subcontractor except as otherwise required by law.

00700-77 PROGRESS PAYMENTS - ACCEPTANCE OF WORK

Certification of progress payments, as well as the actual payment thereof, shall not constitute the County's acceptance of work performed pursuant to this agreement.

00700-78 PAYMENTS IN TRUST

All sums paid to the Contractor pursuant to this agreement are hereby declared to constitute trust funds in the hands of the contractor to be applied first to the payment of claims of subcontractors, laborers, and suppliers arising out of the work, to claims for utilities furnished and taxes imposed, and to the payment of premiums on surety and other bonds and on insurance for any other application.

00700-79 JOINT PAYMENTS

The County reserves the right to issue any progress payment or final payment by check jointly to the Contractor and any subcontractor or supplier.

00700-80 RIGHT TO WITHHOLD PAYMENT

The Construction Manager may decline to approve payment and may withhold payment in whole or in part to the extent reasonable and necessary to protect the County against loss due to defective work, probable or actual third party claims, the Contractor's failure to pay subcontractors or materialmen, reasonable evidence that the work will not be completed within the contract time or contract price or damage to the County or any other contractor on the project.

00700-81 CERTIFICATE OF SUBSTANTIAL COMPLETION

Upon the Contractor's submission of a request for a certificate of Substantial Completion, the Construction Manager shall inspect the work and determine whether the work is Substantially Complete. If the work is Substantially Complete, the Construction Manager shall issue a certificate of Substantial Completion of the work which shall establish the date of Substantial Completion, shall state the responsibilities of the County and the Contractor for security, maintenance, heat, utilities, damage to the work and insurance, and shall fix the time within which the Contractor shall complete the items submitted by the Contractor as requiring correction or further work. The certificate of substantial completion of the work shall be submitted to the County and the Contractor for their written acceptance of the responsibilities assigned to them pursuant to such certificate.

If in the sole opinion of the Construction Manager, the work is not substantially complete, the Construction Manager shall notify the Contractor of such, in writing, and outline requirements to be met to achieve Substantial Completion.

00700-82 PAYMENT UPON SUBSTANTIAL COMPLETION

Upon Substantial Completion of the work and upon application by the Contractor and approval by the Construction Manager, the County shall make payment reflecting 100% work completed, less value of work remaining as determined by Construction Manager and any authorized retainage.

00700-83 COMMENCEMENT OF WARRANTIES

Warranties required by this agreement shall commence on the date of final completion of the project as determined under Article 00700-84 unless otherwise provided in the certificate of Substantial Completion.

00700-84 FINAL PAYMENT - WAIVER OF CLAIMS, DISPUTE OF FINAL PAYMENT

The acceptance of the Substantial Completion payment shall constitute a waiver of all claims by the Contractor except those previously made in writing and identified by the Contractor as unsettled at the time of application for payment at Substantial Completion and except for the retainage sums due at final acceptance. Following the Construction Manager’s issuance of the certificate of Substantial Completion and the Contractor's completion of the work pursuant to this agreement, the Contractor shall forward to the Construction Manager a written notice that the work is ready for final inspection and acceptance. If after inspection the Construction Manager certifies that the work is complete and issues written notification of such to the Contractor, the Contractor shall forward to the Construction Manager a final application for payment. The Construction Manager shall issue a certificate for payment, which shall approve final payment to the Contractor and shall establish the date of final completion.

In the event the Contractor timely disputes the amount of the final payment, the amount due the Contractor shall be deemed by the Contractor and the County to be an unliquidated sum and no interest shall accrue or be payable on the sum finally determined to be due to the Contractor for any period prior to final determination of such sum, whether such determination be by agreement of the Contractor and the County or by final judgment of the proper court in the event of litigation between the County and the Contractor. The Contractor specifically waives and renounces any and all rights it may have under O.C.G.A. §13-6-13 and agrees that in the event suit is brought by the Contractor against the County for any sum claimed by the Contractor under the Contract or for any extra or additional work, no interest shall be awarded on any sum found to be due from the County to the Contractor in the final judgment entered in such suit. All final judgments shall draw interest at the legal rate, as specified by law.

00700-85 DOCUMENTATION OF COMPLETION OF WORK

Neither the final payment nor the remaining retainage shall become due until the Contractor submits the following documents to the Construction Manager:

a. An affidavit that all payrolls, bills for materials and equipment, and other indebtedness connected with the work have been paid other otherwise satisfied;

b. The surety's consent to final payment; and

c. Any other data reasonably required by the County or Construction Manager establishing payment or satisfaction of all such obligations, including releases, waivers of liens, and documents of satisfaction of debts.

In the event that a subcontractor refuses to furnish a release or waiver as required by the County or Construction Manager, the Contractor may furnish a bond satisfactory to the County to indemnify the County against such loss. In the event that any lien or indebtedness remains unsatisfied after all payments are made, the contractor shall refund to the County all moneys that the County may become compelled to pay in discharging such lien or other indebtedness, including all costs and reasonable attorney's fees.

00700-86 GOVERNING LAW

Each and every provision of this agreement shall be construed in accordance with and governed by Georgia law. The parties acknowledge that this contract is executed in Fulton County, Georgia and that the contract is to be performed in Fulton County, Georgia. Each party hereby consents to the Fulton Superior Court's sole jurisdiction over any dispute which arises as a result of the execution or performance of this agreement, and each party hereby waives any and all objections to venue in the Fulton Superior Court.

00700-87 CHANGES IN THE WORK

A. CHANGE ORDERS

1. A Change Order is a written order to the Contractor signed to show the approval and the authorization of the County, issued after execution of the Contract, authorizing a change in the Work and/or an adjustment in the Contract Sum or the Contract Time. Change Orders shall be written using forms designated by the County with Contractor providing supporting documentation as required by the Construction Manager. The Contract Sum and the Contract Time may be changed only by approved Change Order pursuant to Fulton County Procedure 800-6. The amount payable by the Change Order is payment in full for all direct and indirect costs incurred and related to the work under said Change Order, including but not limited to delays, imports, acceleration, disruption and extended overhead. A Change Order signed by the Contractor indicates the Contractor's agreement therewith, including the adjustment in either or both of the Contract Sum or the Contract Time.

2. The County, without invalidating the Contract, may order changes in the Work within the general scope of the Contract as defined herein. The time allowed for

performance of the work and the contract price to be paid to the Contractor may be adjusted accordingly.

3. The cost or credit to the County resulting from a change in the Work shall be determined in one or more of the following ways:

   a. By mutual acceptance of a lump sum properly itemized and supported by sufficient substantiating data to permit evaluation;

   b. By unit prices stated in the Contract Documents or subsequently agreed upon;

   c. By cost to be determined in a manner agreed upon by the parties and a mutually acceptable fixed or percentage fee; or

   d. By the method provided in Subparagraph A4 below.

4. If none of the methods set forth in Subparagraphs 3a, 3b, or 3c above is agreed upon, the Contractor, provided a written order signed by the Construction Manager is received, shall promptly proceed with the Work involved. The cost of such Work shall then be determined by the Construction Manager on basis of the reasonable expenditures and savings of those performing the Work attributable to the change. The cost of the change shall include only the items listed in Subparagraph 5a below, and in the case of either a decrease or an increase in the Contract Sum, an allowance for overhead and profit in accordance with the schedules set forth in Subparagraphs 5b and 6 below shall be applied to the cost or credit.

   a. In such case, and also under Subparagraph 3a above, the Contractor shall keep and present, in such form as the Construction Manager may prescribe, an itemized accounting of all actual costs expended, together with appropriate supporting data for inclusion in a Change Order.

   b. All hourly rate charges shall b submitted to the Construction Manager for prior review and approval. All hourly rate charges shall be properly supported as required by the Construction Manager with certified payrolls, or their acceptable equivalent. When authorized to proceed for a given change and actual expenditures have been made prior to execution of a Change Order for the entire change, such actual expenditures may be summarized monthly, and if approved, incorporated into a Change Order. When both additions and credits covering related Work or substitutions are involved in any one change, the allowance for overhead and profit shall be figured on the basis of the net increase or decrease, if any, with respect to that change.

5. In Subparagraphs 3 and 4 above, the items included in “Cost and “Overhead” shall be based on the following schedule:

   a. Unless otherwise provided in the Contract Documents, “Cost” shall be limited to the following: cost of materials incorporated into the Work, including sales tax and cost of delivery; cost of direct labor (labor cost may include a pro rata share of foreman’s account of the change) including social security, old age and unemployment insurance, and fringe benefits required by agreement or custom; workers’ or workmen’s compensation insurance; rental value of equipment and machinery; costs for preparing Shop Drawings.

   b. Unless otherwise provided in the Contract Documents, “Overhead” shall include the following: bond and insurance premiums including increase and decreases from change in the Work, supervision, superintendence, construction parking, wages of timekeepers, watchmen and clerks, small

tools, consumable supplies, expendables, incidentals, general office expense, the cost of additional reproduction for the Contractor's subcontractors beyond that agreed upon in the Contract Documents, construction parking, any additional costs of craft supervision by the Contractor's or subcontractors' superintendents, and overhead charges which would be customary and expended regardless of the change in the Work due to other overlapping activities which are included as part of the original Contract, and all other expenses not included in "Cost" above.

c. In the event that a change is issued by the County which would require the expenditure of substantial amounts of special supervision (beyond the foreman level) by the Contractor, the Contractor may, at the sole direction of the Construction Manager, be allowed to incorporate these charges into the agreement cost for the change.

6. In Subparagraphs 3 and 4 above, the allowance for overhead and profit combined, included in the total cost or credit to the County, shall be based on the following schedule:

a. For the Contractor, for any work performed by the Contractor's own forces, <u>ten (10) percent</u> of the cost.

b. For the Contractor, for any work performed by a Contractor's subcontractor, five (5) percent of the amount due the subcontractor.

c. For each subcontractor or sub-subcontractor involved, for any work performed by that subcontractor's or sub-subcontractor's own forces, ten (10) percent of the cost.

d. For each subcontractor, for work performed by a sub-subcontractor, five (5) percent of the amount due to the sub-subcontractor.

e. Cost to which overhead and profit is to be applied shall be determined in accordance with Subparagraph 5 above unless modified otherwise.

7. In order to facilitate checking of quotations for extras or credits, all proposals or bids, except those so minor that their propriety can be seen by inspection, shall be accompanied by a complete itemization of costs, including labor cost, materials and subcontracts. Labor and materials shall be itemized in the manner defined in Subparagraph 4 above. Where major cost items are subcontracts, they shall be itemized also. <u>In no case shall a change be approved without such itemization</u>.

8. No payment shall be made for any changes to the contract that are not included in a fully executed Change Order.

B. CONCEALED, UNKNOWN AND DIFFERING CONDITIONS

1. Should concealed conditions be encountered in the performance of the Work below the surface of the ground, or should concealed or unknown conditions in an existing structure be at variance with the conditions indicated by the Contract Documents, or should unknown physical conditions below the surface of the ground or concealed or unknown conditions in an existing structure of an unusual nature, differing materially from those ordinarily encountered and generally recognized as inherent in work of the character provided for in this Contract, be encountered, the Contract Sum and Contract Time shall be equitably adjusted by Change Order upon request by either party made **<u>within twenty (20) days after the first observance</u>** of the conditions. No such request for equitable adjustment shall be valid unless the Contractor complies with this (20) days notice and Subparagraph C.1. below.

2. The Contractor shall promptly, and before such conditions are disturbed, notify the Construction Manager in writing of any claim of concealed, unknown or differing conditions pursuant to this paragraph. The Construction Manager shall authorize the Engineer to investigate the conditions, and if it is found that such conditions do materially so differ and cause an increase or decrease in the Contractor's cost of, or the time required for, performance of any part of the Work under this Contract, whether or not changed as a result of such conditions, an equitable adjustment shall be recommended to the Construction Manager.

3. No claim of the Contractor under this clause shall be allowed unless the Contractor has given the notice required in (a) above, prior to disturbing the condition.

4. No claim by the Contractor for an equitable adjustment shall be allowed if asserted after final payment under this Contract.

5. Any materially differing site condition as between what is shown on the Drawings and Specifications and actually found on site shall be immediately reported to the Construction Manager in writing prior to the commencement of Work at the site. Failure of the Contractor to notify the Construction Manager in writing of the differing site condition prior to performance of Work at the site shall constitute a waiver of any claim for additional monies. Any Change Order necessitated by the differing site condition shall be processed as provided under "Changes in the Contract".

C. REQUESTS FOR ADDITIONAL COST

1. If the Contractor wishes to request an increase in the Contract Sum, the Contractor shall give the Construction Manager written notice thereof within twenty (20) days after the occurrence of the event, or identification of the conditions, giving rise to such request. This notice shall be give by the Contractor before proceeding to execute the Work, except in an emergency endangering life or property in which case the Contractor shall proceed in accordance with Article 00700-25 and Subparagraph A.4 above. No such request shall be valid unless so made within the twenty (20) days specified above. If the County and the Contractor cannot agree on the amount of the adjustment in the Contract Sum, it shall be determined by the Construction Manager. Any change in the Contract Sum resulting from such claim shall be documented by Change Order.

2. If the Contractor claims that addition cost is involved because of, but not limited to (1) any written interpretation pursuant to General Condition 00700-17 of this Agreement, (2) any order by the County to stop the Work pursuant to Articles 00700-25 and 00700-37 of this Agreement where the Contractor was not at fault, or any such order by the Construction Manager as the County's agent, or (3) any written order for a minor change in the Work issued pursuant to Paragraph D below, the Contractor shall submit a request for an increase in the Contract Sum as provided in Subparagraph C.1 above. No such claim shall be valid unless the Contractor complies with Subparagraph C.1 above and approved by the County pursuant to Change Order Policy 800-6.

D. MINOR CHANGES IN THE WORK

The Construction Manager may order minor changes in the Work not involving an adjustment in the Contract Price, extension of the time allowed for performance of the work and not inconsistent with the intent of the Contract Documents. Such changes shall be effected by a written Change Directive issued by the Construction Manager, and shall be binding on the County and the Contractor. The Contractor shall carry out such written orders promptly.

E. BONDS

If any change order results in an increase in the contract price, the contractor shall increase the penal sum of the performance and payment bonds to equal the increased price.

00700-88 DISAGREEMENT WITH ORDERS FOR CHANGE

Contractor's written acceptance of a Change Order or other order for changes shall constitute his final and binding agreement to the provisions thereof and a waiver of all claims in connection therewith, whether direct or consequential in nature. Should Contractor disagree with any order for changes, he may submit a notice of potential claim to the Construction Manager, at such time as the order is set forth in the form of a Change Order. Disagreement with the provisions of an order for changes shall not relieve Contractor of his obligation under Article 00700-87 of this Agreement.

00700-89 NO WAIVER OF REMEDIES

Exercise by the County of any remedy is not exclusive of any other remedy available to County and shall not constitute a waiver of any such other remedies. Failure of the County to exercise any remedy, including breach of contract remedies, shall not preclude the County from exercising such remedies in similar circumstances in the future.

00700-90 LAND AND RIGHTS-OF-WAY

The owner will provide, as indicated in the Contract Documents and prior to Notice to Proceed, the lands upon which the work is to be done, right-of-way for access thereto, and such other lands which are designated for the use of the Contractor. The Contractor shall confine the Contractor's work and all associated activities to the easements and other areas designated for the Contractor's use. The Contractor shall comply with any limits on construction methods and practices which may be required by easement agreements. If, due to some unforeseen reason, the necessary easements are not obtained, the Contractor shall receive an equitable extension of contract time dependent upon the effect on the critical path of the project schedule or the County may terminate the Contract for its convenience.

00700-91 COORDINATION WITH STATE DEPARTMENT OF TRANSPORTATION

No clearing or grading shall be completed by Contractor within the State Department of Transportation (DOT) area under construction. The Contractor must coordinate his construction scheduling with DOT.

If the Contractor begins work before DOT's completion date, he must obtain the approval of DOT before starting work in the area. The state DOT has the right to stop the Contractor's work the DOT area.

The Contractor shall receive no additional compensation or damages resulting from delay or work stoppage from DOT actions or scheduling.

Contractor shall obtain DOT drawings of the DOT, project area for verification of road geometry, storm drains, etc. from Georgia Department of Transportation or Fulton County. The Contractor is responsible for obtaining any pertinent DOT revisions.

I N D E X

SUBJECT	GENERAL CONDITION ARTICLE #
Administration of Contract	17
Applicable Law	7
Assignment	13
Blasting and Excavation	26
Changes	87, 88
Clean Site	29
Codes	4
Commencement of Work	49
Contract Documents	2
Contractor's Representative	66
Defective Work	31, 32
Definitions	3
Delay	51, 52, 54, 55
Extension of Time	52, 53, 54
Familiarity of Time	1, 22
Final Payment	84
Governing Law	86
High Voltage Lines	27
Inclement Weather	53
Indemnification	15
Inspections	23, 61, 62, 68, 69
Interruption	48
Licenses	8
Liquidated Damages	46, 48
New Materials	33, 63
Notices	24
Payment	72, 73, 75
Payment of Subcontractors	75, 76
Payment Upon Substantial Completion	82, 84
Payroll Reports	65
Permits	8
Progress Payments	72, 73, 77, 78, 79, 80
Protection of Work	30, 64
Records Inspection	45

Retainage	11, 74
Safety	25
Scaffolding and Staging	28
Scheduling	70
Service of Process	14
Stop Work Order	37
Subcontractors	67, 76
Substantial Completion	81
Suspension	48
Supervision of Work	16, 66
Surety's Responsibility	17
Taxes	9, 10
Termination for Cause	38, 44, 47
Termination for Convenience	39, 40, 41
Time of the Essence	50
Warranties	33, 34, 35, 36
Work Behind Schedule	56

EXHIBIT A

FINAL AFFIDAVIT

TO FULTON COUNTY, GEORGIA

I, _____, hereby certify that all suppliers of materials, equipment and service, subcontractors, mechanic, and laborers employed by _____ or any of his subcontractors in connection with the design and/or construction of _____ at Fulton County have been paid and satisfied in full as of _____, 20___, and that there are no outstanding obligations or claims of any kind for the payment of which Fulton County on the above-named project might be liable, or subject to, in any lawful proceeding at law or in equity.

_____

Signature

_____

Title

Personally appeared before me this _____ day of _____, 20_____. _____, who under Oath deposes and says that he is _____of the firm of _____, that he has read the above statement and that to the best of his knowledge and belief same is an exact true statement.

_____

Notary Public

:

_____

My Commission expires

END OF SECTI

00700-1 FAMILIARITY WITH SITE

Execution of this agreement by the Contractor is a representation that the Contractor has visited the site, has become familiar with the local conditions under which the work is to be performed, and has correlated personal observations with the requirements of this agreement.

00700-2 CONTRACT DOCUMENTS

This agreement consists of Owner's invitation for bid, instructions to bidders, bid form, performance bond, payment bond, acknowledgments, the contract, general conditions, special conditions, specifications, plans, drawings, exhibits, addenda, and written change orders.

A. Notice of Award of Contract:

B. Execution of Contract Documents

Upon notification of Award of Contract, the Owner shall furnish the Contractor the conformed copies of Contract Documents for execution by the Contractor and the Contractor's surety.

Within ten (10) days after receipt the Contractor shall return all the documents properly executed by the Contractor and the Contractor's surety. Attached to each document shall be an original power-of-attorney for the person executing the bonds for the surety and certificates of insurance for the required insurance coverage.

After receipt of the documents executed by the Contractor and his surety with the power-of-attorney and certificates of insurance, the Owner shall complete the execution of the documents. Distribution of the completed documents will be made upon completion.

Should the Contractor and/or Surety fail to execute the documents within the time specified; the Owner shall have the right to proceed on the Bid Bond accompanying the bid.

If the Owner fails to execute the documents within the time limit specified, the Contractor shall have the right to withdraw the Contractor's bid without penalty.

Drawings and Specifications:

The Drawings, Specifications, Contract Documents, and all supplemental documents, are considered essential parts of the Contract, and requirements occurring in one are as binding as though occurring in all. They are intended to define, describe and provide for all Work necessary to complete the Project in an acceptable manner, ready for use, occupancy, or operation by the Owner.

In case of conflict between the Drawings and Specifications, the Specifications shall govern. Figure dimensions on Drawings shall govern over scale dimensions, and detailed Drawings shall govern over general Drawings.

In cases where products or quantities are omitted from the Specifications, the description and quantities shown on the Drawings shall govern.

Any ambiguities or need for clarification of the Drawings or Specifications shall be immediately reported to the Construction Manager in writing. Any such ambiguity or need for clarification shall be handled by the Construction Manager in writing. No clarification of the Drawings and Specifications hereunder by the Construction Manager

shall entitle the Contractor to any additional monies unless a Change Order has been processed as provided by "Changes in the Contract" hereof.

Any work done by the Contractor following a discovery of such differing site condition or ambiguity or need for clarification in the Contract Drawings and Specifications prior to a written report to the Construction Manager shall not entitle the Contractor to additional monies and shall be done at the Contractor's risk.

The Construction Manager will furnish the Contractor five (5) copies of the Contract Drawings and the Specifications, one copy of which the Contractor shall have available at all times on the Project site.

00700-3 DEFINITIONS

The following terms as used in this agreement are defined as follows to the extent the definitions herein differ or conflict with those in the Instructions for Bidders, Section 00100, the definitions herein shall control.

Alternate bids – the amount stated in the bid or proposal to be added to or deducted from the amount of the base bid or base proposal if the corresponding change in project scope or alternate materials or methods of construction is accepted.

Base bid – the amount of money stated in the bid or proposal as the sum for which the bidder or proposer offers to perform the work.

Change Order - an alteration, addition, or deduction from the original scope of work as defined by the contract documents to address changes or unforeseen conditions necessary for project completion. A written order to the Contractor issued by the County pursuant to Fulton County Policy and Procedures 800-6 for changes in the work within the general scope of the contract documents, adjustment of the contract price, extension of the contract time, or reservation of determination of a time extension.

Construction Manager shall mean the individual designated in writing, by the Director of the Facilities and Transportation Services Department as the Construction Manager.

Contractor shall mean the party of the second part to the Contract Agreement or the authorized and legal representative of such party.

Contract Documents include the Contract Agreement, Contractor's Bid (including all documentation accompanying the Bid and any post-Bid documentation required by the County prior to the Notice of Award), Bonds, all Special Conditions, General Conditions, Supplementary Conditions, Specifications, Drawings and addenda, together with written amendments, change orders, field orders and the Construction Manager's written interpretations and clarifications issued in accordance with the General Conditions on or after the date of the Contract Agreement.

Shop drawing submittals reviewed in accordance with the General Conditions, geotechnical investigations and soils report and drawings of physical conditions in or relating to existing surface structures at or contiguous to the site are not Contract Documents.

Contract Price - The sum specified in the Agreement to be paid to the Contractor in consideration of the Work.

Contract Time shall mean the number of consecutive calendar days as provided in the Contract Agreement for completion of the Work, to be computed from the date of Notice to Proceed.

Owner or County shall mean Fulton County Government, party of the first part to the Contract Agreement, or its authorized and legal representatives.

Day - A calendar day of twenty-four hours lasting from midnight of one day to midnight the next day.

Detention Equipment Contractor ("DEC") – Any legally chartered business entity whose primary activity is the supply and/or installation of detention hardware equipment and related systems.

Director - Director of the Facilities and Transportation Services Department of Fulton County, Georgia or the designee thereof.

Engineer of Record – Hellmuth, Obata, Kassabaum, Inc., in conjunction with SafeTech Engineering developed the specifications and drawings referred to herein.

Final Completion shall mean the completion of all work as required in accordance with the terms and conditions of the contract documents.

Liquidated Damages shall mean the amount, stated in the Contract Agreement, which the Contractor agrees to pay to the Owner for each consecutive calendar day beyond the Contract time required to complete the Project or for failing to comply with associated milestones. Liquidated Damages will end upon written notification from the Owner of Final Acceptance of the Project or upon written notification of from the Owner of completion of the milestone.

Notice to Proceed - A written communication issued by the County to the Contractor authorizing it to proceed with the work, establishing the date of commencement and completion of the work, and providing other direction to the Contractor.

Products shall mean materials or equipment permanently incorporated into the work.

Program Manager - Not used in this contract. Delete all references.

Project Manual - The Contract Documents.

Provide shall mean to furnish and install.

Substantial Completion - The date certified by the Construction Manager when all or a part of the work, as established pursuant to General Condition 0700-81, is sufficiently completed in accordance with the requirements of the contract documents so that the identified portion of the work can be utilized for the purposes for which it is intended.

Work or Project - All of the services specified, indicated, shown or contemplated by the contract documents, and furnishing by the Contractor of all materials, equipment, labor, methods, processes, construction and manufacturing materials and equipment, tools, plans, supplies, power, water, transportation and other things necessary to complete such services in accordance with the contract documents to insure a functional and complete facility.

00700-4 CODES

All codes, specifications, and standards referenced in the contract documents shall be the latest editions, amendments and revisions of such referenced standards in effect as of the date of the request for proposals for this contract.

00700-5 REVIEW OF CONTRACT DOCUMENTS

Before making its proposal to the County, and continuously after the execution of the agreement, the Contractor shall carefully study and compare the contract documents

and shall at once report to the Construction Manager any error, ambiguity, inconsistency or omission that may be discovered, including any requirement which may be contrary to any law, ordinance, rule, or regulation of any public authority bearing on the performance of the work. By submitting its proposal, the Contractor agrees that the contract documents, along with any supplementary written instructions issued by or through the Construction Manager that have become a part of the contract documents, appear accurate, consistent and complete insofar as can be reasonably determined. If the Contractor has timely reported in writing any error, inconsistency, or omission to the Construction Manager, has properly stopped the affected work until instructed to proceed, and has otherwise followed the instructions of the Construction Manager, the Contractor shall not be liable to the County for any damage resulting from any such error, inconsistency, or omission in the contract documents. The Contractor shall not perform any portion of the work without the contract documents, approved plans, specifications, products and data, or samples for such portion of the work. For purposes of this section "timely" is defined as the time period in which the contractor discovers, or should have discovered, the error, inconsistency, or omission, with the exercise of reasonable diligence.

00700-6 STRICT COMPLIANCE

No observation, inspection, test or approval of the County or Construction Manager shall relieve the Contractor from its obligation to perform the work in strict conformity with the contract documents except as provided in General Condition 00700-48.

00700-7 APPLICABLE LAW

All applicable State laws, County ordinances, codes, and rules and regulations of all authorities having jurisdiction over the construction of the project shall apply to this agreement. The Contractor shall comply with the requirements of any Fulton County program concerning non-discrimination in contracting. All work performed within the right of way of the Georgia Department of Transportation and any railroad crossing shall be in accordance with Georgia Department of Transportation regulations, policies and procedures and, where applicable, those of any affected railroad. The Contractor shall comply with all laws, ordinances, codes, rules and regulations bearing on the conduct of the work as specified and the Contractor agrees to indemnify and hold harmless the County, its officers, agents and employees, as well as the Construction Manager and the Program Manager against any claim or liability arising from or based on the violation of any law, ordinance, regulation, order or decree affecting the conduct of the work, whether occasioned by the Contractor, his agents or employees.

00700-8 PERMITS, LICENSES AND BONDS

All permits and licenses necessary for the work shall be secured and paid for by the Contractor. If any permit, license or certificate expires or is revoked, terminated, or suspended as a result of any action on the part of the Contractor, the Contractor shall not be entitled to additional compensation or time. The Contractor shall obtain and keep in force at all times performance and payment bonds payable to Fulton County in penal amounts equal to 100% of the Contract price.

00700-9 TAXES

C. The Contractor shall pay all sales, retail, occupational, service, excise, old age benefit and unemployment compensation taxes, consumer, use and other similar taxes, as well as any other taxes or duties on the materials, equipment, and labor for the work provided by the Contractor which are legally enacted by any

municipal, county, state or federal authority, department or agency at the time bids are received, whether or not yet effective. The Contractor shall maintain records pertaining to such taxes and levies as well as payment thereof and shall make the same available to the County at all reasonable times for inspection and copying. The Contractor shall apply for any and all tax exemptions which may be applicable and shall timely request from the County such documents and information as may be necessary to obtain such tax exemptions. The County shall have no liability to the Contractor for payment of any tax from which it is exempt.

D. The Contractor is obligated to comply with all local and State Sales and Use Tax laws. The Contractor shall provide the Owner with documentation to assist the Owner in obtaining sales and/or use tax refunds for eligible machinery and equipment used for the primary purpose of reducing or eliminating air or water pollution as provided for in Chapter 48-8-3 (36) and (37) of the Official Code of Georgia. All taxes shall be paid by the Contractor. All refunds will accrue to the Owner.

Acceptance of the project as complete and final payment will not be made by the Owner until the Contractor has fully complied with this requirement.

00700-10 DELINQUENT CONTRACTORS

The County shall not pay any claim, debt, demand or account whatsoever to any person firm or corporation who is in arrears to the County for taxes. The County shall be entitled to a counterclaim, backcharge, and offset for any such debt in the amount of taxes in arrears, and no assignment or transfer of such debt after the taxes become due shall affect the right of the County to offset any taxes owed against said debt.

00700-11 LIEN WAIVERS

The Contractor shall furnish the County with evidence that all persons who have performed work or furnished materials pursuant to this agreement have been paid in full prior to submitting its demand for final payment pursuant to this agreement. A final affidavit, Exhibit A, must be completed, and submitted to comply with requirements of 00700-11. In the event that such evidence is not furnished, the County may retain sufficient sums necessary to meet all lawful claims of such laborers and materialmen. The County assumes no obligation nor in any way undertakes to pay such lawful claims from any funds due or that may become due to the Contractor.

00700-12 MEASUREMENT

All items of work to be paid for per unit of measurement shall be subject to inspection, measurement, and confirmation by the Construction Manager.

00700-13 ASSIGNMENT

The Contractor shall not assign any portion of this agreement or moneys due there from (include factoring of receivables) without the prior written consent of the County. The Contractor shall retain personal control and shall provide personal attention to the fulfillment of its obligations pursuant to this agreement. Any assignment without the express written consent of the County shall render this contract voidable at the sole option of the County.

00700-14 FOREIGN CONTRACTORS

In the event that the Contractor is a foreign corporation, partnership, or sole proprietorship, the Contractor hereby irrevocably appoints the Secretary of State of Georgia as its agent for service of all legal process for the purpose of this contract only.

00700-15 INDEMNIFICATION

The Contractor hereby assumes the entire responsibility and liability for any and all injury to or death of any and all persons, including the Contractor's agents, servants, and employees, and in addition thereto, for any and all damages to property caused by or resulting from or arising out of any act or omission in connection with this contract or the prosecution of work hereunder, whether caused by the Contractor or the Contractor's agents, Servants, or employees, or by any of the Contractor's subcontractors or suppliers, and the Contractor shall indemnify and hold harmless the County, the Construction Manager, County's Commissioners, officers, employees, successors, assigns and agents, or any of their subcontractors from and against any and all loss and/or expense which they or any of them may suffer or pay as a result of claims or suits due to, because of, or arising out of any and all such injuries, deaths and/or damage, irrespective of County or Construction Manager negligence (except that no party shall be indemnified for their own sole negligence). The Contractor, if requested, shall assume and defend at the Contractor's own expense, any suit, action or other legal proceedings arising there from, and the Contractor hereby agrees to satisfy, pay, and cause to be discharged of record any judgment which may be rendered against the County and the Construction Manager arising there from.

In the event of any such loss, expense, damage, or injury, or if any claim or demand for damages as heretofore set forth is made against the County or the Construction Manager, the County may withhold from any payment due or thereafter to become due to the Contractor under the terms of this Contract, an amount sufficient in its judgment to protect and indemnify it and the Construction Manager, County's Commissioners, officers, employees, successors, assigns and agents from any and all claims, expense, loss, damages, or injury; and the County, in its discretion, may require the Contractor to furnish a surety bond satisfactory to the County providing for such protection and indemnity, which bond shall be furnished by the Contractor within five (5) days after written demand has been made therefore. The expense of said Bond shall be borne by the Contractor.

00700-16 SUPERVISION OF WORK AND COORDINATION WITH OTHERS

The Contractor shall supervise and direct the work using the Contractor's best skill and attention. The Contractor shall be solely responsible for all construction methods and procedures and shall coordinate all portions of the work pursuant to the contract subject to the overall coordination of the Construction Manager. All work pursuant to this agreement shall be performed in a skillful and workmanlike manner.

The County reserves the right to perform work related to the Project with the County's own forces and to award separate contracts in connection with other portions of the project, other work on the site under these or similar conditions of the contract, or work which has been extracted from the Contractor's work by the County.

When separate contracts are awarded for different portions of the project or other work on the site, the term "separate contractor" in the Contract Documents in each case shall mean the contractor who executes each separate County Agreement.

The Contractor shall cooperate with the County and separate contractors in arranging the introduction and storage of materials and equipment and execution of their work, and shall cooperate in coordinating connection of its work with theirs as required by the Contract Documents.

If any part of the Contractor's Work depends for proper execution or results upon the work of the County or any separate contractor, the Contractor shall, prior to proceeding with that portion of the Work, promptly report to the Construction Manager any apparent discrepancies or defects in such other work that render it unsuitable for such proper execution and results **within fourteen (14) days** of discovery of such discrepancy or defect. Failure of the Contractor to so report in writing shall constitute an acceptance of the County's or separate contractor's work as fit and proper to receive the Work, except as to any defects which may subsequently become apparent in such work by others.

Any costs caused by defective or untimely work shall be borne by the party responsible therefore.

Should the Contractor wrongfully cause damage to the work or property of the County or to other work or property on the site, including the work of separate contractors, the Contractor shall promptly remedy such damage at the Contractor's expense.

Should the Contractor be caused damage by any other contractor on the Project, by reason of such other contractor's failure to perform properly his contract with the County, no action shall lie against the County or the Construction Manager inasmuch as the parties to this agreement are the only beneficiaries hereof and there are no third party beneficiaries and neither the County nor the Construction Manager shall have liabilities therefore, but the Contractor may assert his claim for damages solely against such other contractor. The Contractor shall not be excused from performance of the contract by reason of any dispute as to damages with any other contractor or third party.

Where the Work of this Contract shall be performed concurrently in the same areas as other construction work, the Contractor shall coordinate with the Construction Manager and the separate contractors in establishing mutually acceptable schedules and procedures that shall permit all jobs to proceed with minimum interference.

If a dispute arises between the Contractor and separate contractors as to their responsibility for cleaning up, the County may clean up and charge the cost thereof to the Contractor or contractors responsible therefore as the County shall determine to be just.

00700-17 ADMINISTRATION OF CONTRACT

The Program Manager and the Construction Manager shall provide administration services as hereinafter described.

For the administration of this Contract, the Construction Manager shall serve as the County's primary representative during design and construction and until final payment to the Contractor is due. The Construction Manager shall advise and consult with the County and the Program Manager. The primary point of contact for the Contractor shall be the Construction Manager. All correspondence from the Contractor to the County shall be forwarded through the Construction Manager. Likewise, all correspondence and instructions to the Contractor shall be forwarded through the Construction Manager.

The Construction Manager will determine in general that the construction is being performed in accordance with design and engineering requirements, and will endeavor to guard the County against defects and deficiencies in the Work.

The Construction Manager will not be responsible for or have control or charge of construction means, methods, techniques, sequences, or procedures, or for safety precautions and programs in connection with the Work, nor will it be responsible for the Contractor's failure to carry out the Work in accordance with the Contract Documents. The Construction Manager will not be responsible for or have control or charge over the acts or omissions of the Contractor, its engineers, consultants, subcontractors, or any of their agents or employees, or any other persons performing the Work.

Based on the Construction Manager's observations regarding the Contractor's Applications for Payment, the Construction Manager shall determine the amounts owing to the Contractor, in accordance with the payment terms of the Contract, and shall issue Certificates for Payment in such amount to the County.

The Construction Manager shall render interpretations necessary for the proper execution or progress of the Work. Either party to the Contract may make written requests to the Construction Manager for such interpretations.

Claims, disputes and other matters in question between the Contractor and the County relating to the progress of the Work or the interpretation of the Contract Documents shall be referred to the Construction Manager for interpretation.

All interpretations of the Construction Manager shall be consistent with the intent of and reasonably inferable from the Contract Documents and shall be in writing or in graphic form.

Except as otherwise provided in this Contract, the Construction Manager shall issue a decision on any disagreement concerning a question of fact arising under this Contract. The Construction Manager shall reduce the decision to writing and mail or otherwise furnish a copy thereof to the Contractor. The decision of the Construction Manager shall be final and conclusive unless, within thirty (30) days from the date of receipt of such copy, the Contractor files a written appeal with the Director of Public Works and mails or otherwise furnishes the Construction Manager a copy of such appeal. The decision of the Director of Public Works or the Director's duly authorized representative for the determination of such appeals shall be final and conclusive. Such final decision shall not be pleaded in any suit involving a question of fact arising under this Contract, provided such is not fraudulent, capricious, arbitrary, so grossly erroneous as necessarily implying bad faith, or is not supported by substantial evidence. In connection with any appeal proceeding under this Article, the Contractor shall be afforded an opportunity to be heard and to offer evidence in support of Contractor's appeal. Pending any final decision of a dispute hereunder, the Contractor shall proceed diligently with the performance of the Contract as directed by the Construction Manager.

The Construction Manager shall have authority to reject Work which does not conform to the Contract Documents. Whenever, in the Construction Manager's opinion, it is considered necessary or advisable for the implementation of the intent of the Contract Documents, the County shall have authority to require special inspection or testing of the Work whether or not such Work be then fabricated, installed or completed. The Contractor shall pay for such special inspection or testing if the Work so inspected or tested is found not to comply with the requirements of the contract; the County shall pay for special inspection and testing if the Work is found to comply with the contract. Neither the Construction Manager's authority to act under this Subparagraph, nor any decision made by the Construction Manager in good faith either to exercise or not to exercise such authority, shall give rise to any duty or responsibility of the Construction

Manager to the Contractor, any subcontractor, any of their agents or employees, or any other person performing any of the Work.

The Contractor shall provide such shop drawings, product data, and samples as may be required by the Construction Manager and/or as required by these Contract Documents.

The Construction Manager shall conduct inspections to determine Substantial Completion and Final Completion, and shall receive and forward to the County for review written warranties and related documents required by the Contract Documents and assembled by the Contractor. The Construction Manager shall approve and issue Certificates for Payment upon compliance with Substantial and Final Completion requirements indicated in General Conditions 00700-81, 00700-82, 00700-84 and 00700-85 of this Agreement.

Except as provided in General Condition 00700-48, the Contractor shall not be relieved from the Contractor's obligations to perform the work in accordance with the contract documents by the activities or duties of the County or any of its officers, employees, or agents, including inspections, tests or approvals, required or performed pursuant to this agreement.

00700-18 RESPONSIBILITY FOR ACTS OF EMPLOYEES

The Contractor shall employ only competent and skilled personnel. The Contractor shall, upon demand from the Construction Manager, immediately remove any superintendent, foreman or workman whom the Construction Manager may consider incompetent or undesirable.

The Contractor shall be responsible to the County for the acts and omissions of the Contractor's employees, subcontractors, and agents as well as any other persons performing work pursuant to this agreement for the Contractor.

00700-19 LABOR, MATERIALS, SUPPLIES, AND EQUIPMENT

Unless otherwise provided in this agreement, the Contractor shall make all arrangements with necessary support agencies and utility companies provide and pay for all labor, materials, equipment, tools, construction equipment and machinery, water, heat, utilities, transportation, and other facilities and services necessary for the execution and completion of the work.

00700-20 DISCIPLINE ON WORK SITE

The Contractor shall enforce strict discipline and good order among its employees and subcontractors at all times during the performance of the work, to include compliance with the Fulton County Drug Free Work Place Policy. The Contractor shall not employ any subcontractor who is not skilled in the task assigned to it. The Construction Manager may, by written notice, require the Contractor to remove from the work any subcontractor or employee deemed by the Construction Manager to be incompetent.

00700-21 HOURS OF OPERATION

All work at the construction site shall be performed during regular business hours of the Fulton County government, except upon the Construction Manager's prior written consent to other work hours. It is further understood that the Contractor's construction schedule is based on a normal 40 hours, five day work week, less Fulton County-recognized holidays. Contractors work schedule shall not violate Fulton County Noise Ordinance by working hours inconsistent with the Fulton County Noise Ordinance. The County's current noise ordinance or other applicable ordinance shall govern. If the

Contractor desires to work in excess of this limit, the Contractor shall submit a written request to the Construction Manager, a minimum of five days prior to the desired work date. The Contractor shall be responsible for any additional expenses incurred by the Owner as a result of the extended work hours, including resident inspection overtime. The cost associated with resident inspector overtime shall be deducted form the Contractor monthly payment request.

00700-22 FAMILIARITY WITH WORK CONDITIONS

The Contractor shall take all steps necessary to ascertain the nature and location of the work and the general and local conditions which may affect the work or the cost thereof. The Contractor's failure to fully acquaint itself with the conditions which may affect the work, including, but not limited to conditions relating to transportation, handling, storage of materials, availability of utilities, labor, water, roads, weather, topographic and subsurface conditions, other separate contracts to be entered into by the County relating to the project which may affect the work of the Contractor, applicable provisions of law, and the character and availability of equipment and facilities necessary prior to and during the performance of the work shall not relieve the Contractor of its responsibilities pursuant to this agreement and shall not constitute a basis for an equitable adjustment of the contract terms. The County reserves the right to perform with its own forces or to contract with other entities for other portions of the project work, in which case the Contractor’s responsibility to assure its familiarity with work conditions hereunder shall include all coordination with such other contractors and the County necessary to insure that there is no interference between contractors as will delay or hinder any contractor in its prosecution of work on the project. The County assumes no responsibility for any understandings or representations concerning conditions of the work made by any of its officers, agents, or employees prior to the execution of this agreement.

00700-23 RIGHT OF ENTRY

The County reserves the right to enter the site of the work by such agent, including the Construction Manager, as it may elect for the purpose of inspecting the work or installing such collateral work as the County may desire. The Contractor shall provide safe facilities for such access so that the County and its agents may perform their functions.

00700-24 NOTICES

Any notice, order, instruction, claim or other written communication required pursuant to this agreement shall be deemed to have been delivered or received as follows:

Upon personal delivery to the Contractor, its authorized representative, or the Construction Manager on behalf of the County. Personal delivery may be accomplished by in-person hand delivery or bona fide overnight express service.

Three days after depositing in the United States mail a certified letter addressed to the Contractor or the Construction Manager for the County. For purposes of mailed notices, the County's mailing address shall be 141 Pryor Street, 6th Floor, Atlanta, Georgia 30303, or as the County shall have otherwise notified the Contractor. The Contractor's mailing address shall be the address stated in its proposal or as it shall have most recently notified the Construction Manager in writing.

00700-25 SAFETY

I. SAFETY, HEALTH AND LOSS PREVENTION

The Contractor shall be responsible for implementing a comprehensive project-specific safety, health and loss prevention program and employee substance abuse program for

this project. All Sub-Contractors must either implement their own program or follow the Contractor's safety, health and loss prevention program and employee substance abuse program.

The Contractor's safety, health and loss prevention program and employee substance abuse program must meet or exceed all governmental regulations (OSHA, EPA, DOT, State, local), and any other specific Fulton County requirements

J. COUNTY'S SAFETY, HEALTH, AND LOSS PREVENTION PROCESS GUIDELINES AND REQUIREMENTS

The County and its agents reserve the right, but assume no duty, to establish and enforce safety, health, and loss prevention guidelines and to make the appropriate changes in the guidelines, for the protection of persons and property and to review the efficiency of all protective measures taken by the Contractor. The Contractor shall comply with all safety, health, and loss prevention process guidelines and requirements and changes made by the County or its agent(s). The issuance of any such guidelines or changes by the County or its agent(s) shall not relieve the Contractor of its duties and responsibilities under this Agreement, and the County or its agent(s) shall not thereby assume, nor be deemed to have assumed, any such duties or responsibilities of the Contractor.

K. COMPLIANCE OF WORK, EQUIPMENT, AND PROCEDURES WITH ALL APPLICABLE LAWS and REGULATIONS

All Work, whether performed by the Contractor or its Sub-Contractors of any tier, or anyone directly or indirectly employed by any of them, and all equipment, appliances, machinery, materials, tools and like items incorporated or used in the Work, shall be in compliance with and conform to:

3. All applicable laws, ordinances, rules, regulations and orders of any public, quasi-public or other governmental authority relating to the safety of persons and their protection against injury, specifically including, but in no event limited to, the Federal Occupational Safety and Health Act of 1970, as amended, and all rules and regulations now or hereafter in effect pursuant to said Act.

4. All rules, regulations, and requirements of the County or its agent(s) and its insurance carriers relating there to. In the event of a conflict or differing requirements the more stringent shall govern.

L. PROTECTION OF THE WORK

3. The Contractor shall, throughout the performance of the Work, maintain adequate and continuous protection of all Work and temporary facilities against loss or damage from whatever cause, shall protect the property of the County and third parties from loss or damage from whatever cause arising out of the performance of the Work, and shall comply with the requirements of the County or its agent(s) and its insurance carriers, and with all applicable laws, codes, rules and regulations, (as same may be amended) with respect to the prevention of loss or damage to property as a result of fire or other hazards.

4. The County or its agent(s) may, but shall not be required to, make periodic inspections of the Project work area. In such event, however, the Contractor shall not be relieved of its aforesaid responsibilities and the

County or its agent(s) shall not assume, nor shall it be deemed to have assumed, any responsibility otherwise imposed upon the assurance of Contractor by this Agreement.

M. SAFETY EQUIPMENT

1. The Contractor shall provide to each worker on the Project work area the proper safety equipment for the duties being performed by that worker and will not permit any worker on the Project work area who fails or refuses to use the same. The County or its agent shall have the right, but not the obligation, to order the removal of a worker from the Project work site for his/her failure to comply with safe practices or substance abuse policies.

N. EMERGENCIES

1. In any emergency affecting the safety of persons or property, or in the event of a claimed violation of any federal or state safety or health law or regulation, arising out of or in any way connected with the Work or its performance, the Contractor shall act immediately to prevent threatened damage, injury or loss and to remedy said violation. Failing such action the County or its agent(s) may immediately take whatever steps it deems necessary including, but not limited to, suspending the Work as provided in this Agreement.

2. The County or its agent(s) may offset any and all costs or expenses of whatever nature, including attorneys' fees, paid or incurred by the County or its agent(s) (whether such fees are for in-house counsel or counsel retained by the County or its agent), in taking the steps authorized by Section 00700-25(G) (1) above against any sums then or thereafter due to the Contractor. The Contractor shall defend, indemnify and hold the County, its officers, agents, and employees harmless against any and all costs or expenses caused by or arising from the exercise by the County of its authority to act in an emergency as set out herein. If the Contractor shall be entitled to any additional compensation or extension of time change order on account of emergency work not due to the fault or neglect of the Contractor or its Sub-Contractors, such additional compensation or extension of time shall be determined in accordance with General Condition 00700-52 and General Condition 00700-87 of this Agreement.

O. SUSPENSION OF THE WORK

1. Should, in the judgment of the County or its agent(s), the Contractor or any Sub-Contractor fail to provide a safe and healthy work place, the County or its agent shall have the right, but not the obligation, to suspend work in the unsafe areas until deficiencies are corrected. All costs of any nature (including, without limitation, overtime pay, liquidated damages or other costs arising out of delays) resulting from the suspension, by whomsoever incurred, shall be borne by the Contractor.

2. Should the Contractor or any Sub-Contractor fail to provide a safe and healthy work place after being formally notified in writing by the County or its agents of such non-compliance, the contract may be terminated following the termination provision of the contract.

P. CONTRACTOR’S INDEMNITY OF THE COUNTY FOR CONTRACTOR’S NON-COMPLIANCE WITH SAFETY PROGRAM

1. The Contractor recognizes that it has sole responsibility to assure its Safety Program is implemented and to assure its construction services are safely provided. The Contractor shall indemnify, defend and hold the County and its agents harmless,

from and against any and all liability (whether public or private), penalties (contractual or otherwise), losses, damages, costs, attorneys' fees, expenses, causes of action, claims or judgments resulting, either in whole or in part, from any failure of the Contractor, its Sub-Contractors of any tier or anyone directly or indirectly employed by any of them or for whose acts any of them may be liable, to comply with the safety requirements of the contract. The Contractor shall not be relieved of its responsibilities under the safety requirements of the Contract should the County or its agent(s) act or fail to act pursuant to its rights hereunder.

2. The Contractor shall not raise as a defense to its obligation to indemnify under this Subparagraph I any failure of those indemnified hereunder to assure Contractor operates safely, it being understood and agreed that no such failure shall relieve the Contractor from its obligation to assure safe operations or from its obligation to so indemnify. The Contractor also hereby waives any rights it may have to seek contribution, either directly or indirectly, from those indemnified hereunder.

3. In any and all claims against those indemnified hereunder by any employee of the Contractor, any Sub-Contractor of any tier or anyone directly or indirectly employed by any of them or anyone for whose acts any of them may be liable, the indemnification obligation under this Subparagraph I shall not be limited in any way as to the amount or type of damages, compensation or benefits payable by or for the Contractor or any Sub-Contractor of any tier under any workers' compensation act, disability benefit or other employee benefit acts.

00700-26 BLASTING AND EXCAVATION

The Contractor acknowledges that it is fully aware of the contents and requirements of O.C.G.A. § 25-9-1 through 25-9-12 concerning blasting and excavation near underground gas pipes and facilities and shall fully comply therewith.

00700-27 HIGH VOLTAGE LINES

The Contractor acknowledges that it is fully aware of the contents and requirements O.C.G.A. § 46-3-30 through 46-3-39 concerning safeguards against contact with high voltage lines, and the Contractor shall fully comply with said provisions.

00700-28 SCAFFOLDING AND STAGING

The Contractor acknowledges that it is the person responsible for employing and directing others to perform labor within the meaning of O.C.G.A. § 34-1-1 and agrees to comply with said provisions.

00700-29 CLEAN-UP

The Contractor shall clean up all refuse, rubbish, scrap materials, and debris caused by its operations to the end that the site of the work shall present a neat, orderly and workmanlike appearance at all times.

00700-30 PROTECTION OF WORK

The Contractor shall be responsible for maintenance and protection of the work, which shall include any County-furnished supplies, material, equipment, until final completion of this agreement and acceptance of the work as defined herein. Any portion of the work suffering injury, damage or loss shall be considered defective and shall be corrected or replaced by the Contractor without additional cost to the County.

00700-31 REJECTED WORK

The Contractor shall promptly remove from the project all work rejected by the Construction Manager for failure to comply with the contract documents and the Contractor shall promptly replace and re-execute the work in accordance with the contract documents and without expense to the County. The Contractor shall also bear the expense of making good all work of other Contractors destroyed or damaged by such removal or replacement.

00700-32 DEFECTIVE WORK

If the Contractor defaults or neglects to carry out any portion of the work in accordance with the contract documents, and fails within three days after receipt of written notice from the Construction Manager to commence and continue correction of such default or neglect with diligence and promptness, the County may, after three days following receipt by the Contractor of an additional written notice and without prejudice to any other remedy the County may have, make good such deficiencies and complete all or any portion of any work through such means as the County may select, including the use of a separate Contractor. In such case, an appropriate change order shall be issued deducting from the payments then or thereafter due the Contractor the cost of correcting such deficiencies. In the event the payments then or thereafter due the Contractor are not sufficient to cover such amount, the Contractor shall pay the difference to the County on demand.

The County may, at its option, accept defective or nonconforming work instead of requiring its removal or correction. In such case, a change order shall be issued reducing the price due the contractor to the extent appropriate and equitable. Such contract price adjustment shall be effected whether or not final payment has been made.

00700-33 WARRANTY OF NEW MATERIALS

The Contractor warrants to the County that all materials and equipment furnished under this contract will be new unless otherwise specified, and the Contractor further warrants that all work will be of good quality, free from faults and defects, and in conformance with the contract documents. The warranty set forth in this paragraph shall survive final acceptance of the work.

00700-34 CONTRACTOR'S WARRANTY OF THE WORK

If within one year after the date of issuance of the certificate of final payment pursuant to General Condition 84, or within such longer period of time as may be prescribed by law or by the term of any applicable special warranty required by the contract documents, any of the work is found to be defective or not in accordance with the contract documents, the Contractor shall correct such work promptly after receipt of written notice from the Construction Manager to do so. This obligation shall survive both final payment for the work and termination of the contract.

00700-35 ASSIGNMENT OF MANUFACTURERS' WARRANTIES

Without limiting the responsibility or liability of the Contractor pursuant to this agreement, all warranties given by manufacturers on materials or equipment incorporated in the work are hereby assigned by the Contractor to the County. If requested, the Contractor shall execute formal assignments of said manufacturer's warranties to the County. All such warranties shall be directly enforceable by the County.

00700-36 WARRANTIES IMPLIED BY LAW

The warranties contained in this agreement, as well as those warranties implied by law, shall be deemed cumulative and shall not be deemed alternative or exclusive. No one or more of the warranties contained herein shall be deemed to alter or limit any other.

00700-37 STOP WORK ORDERS

In the event that the Contractor fails to correct defective work as required by the contract documents or fails to carry out the work in accordance with contract documents, the Construction Manager, in writing, may order the Contractor to stop work until the cause for such order has been eliminated. This right of the County to stop work shall not give rise to any duty on the part of the County or the Construction Manager to execute this right for the benefit of the Contractor or for any other person or entity.

00700-38 TERMINATION FOR CAUSE

If the Contractor is adjudged bankrupt, makes a general assignment for the benefit of creditors, suffers the appointment of a receiver on account of its insolvency, fails to supply sufficient properly skilled workers or materials, fails to make prompt payment to subcontractors or materialmen, disregards laws, ordinances, rules, regulations, or orders of any public authority having jurisdiction, fails to diligently prosecute the work, or is otherwise guilty of a material violation of this agreement and fails within seven days after receipt of written notice to commence and continue correction of such default, neglect, or violation with diligence and promptness, the County may, after seven days following receipt by the Contractor of an additional written notice and without prejudice to any other remedy the County may have, terminate the employment of the Contractor and take possession of the site as well as all materials, equipment, tools, construction equipment and machinery thereon. The County may finish the work by whatever methods the County deems expedient. In such case, the Contractor shall not be entitled to receive any further payment until the work is completed. If the unpaid balance of the contract price exceeds the cost of completing the work, such excess shall be paid to the Contractor. If such costs exceed the unpaid balance, the Contractor shall pay the difference to the County on demand. This obligation for payment shall survive the termination of the contract. Termination of this agreement pursuant to this paragraph may result in disqualification of the Contractor from bidding on future County contracts.

00700-39 TERMINATION FOR CONVENIENCE

The County may, at any time upon written notice to the Contractor, terminate the whole or any portion of the work for the convenience of the County. The effective data of the terminations shall be provided in the written notice. Said termination shall be without prejudice to any right or remedy of the County provided herein. In addition, in the event this agreement has been terminated due to the default of the Contractor, and if it is later determined that the Contractor was not in default pursuant to the provisions of this agreement at the time of termination, then such termination shall be considered a termination for convenience pursuant to this paragraph.

00700-40 TERMINATION FOR CONVENIENCE - PAYMENT

If the Contract is terminated for convenience by the Owner as provided in this article, Contractor will be paid compensation for those services actually performed as approved by the Owner or his representative. Partially completed tasks will be compensated for based on a signed statement of completion prepared by the Project Manager and submitted to the Contractor which shall itemize each task element and briefly state what

work has been completed and what work remains to be done. Contractor shall also be paid for reasonable costs for the orderly filing and closing of the project.

00700-41 TERMINATION FOR CONVENIENCE - PAYMENT LIMITATIONS

Except for normal spoilage, and except to the extent that the County shall have otherwise expressly assumed the risk of loss, there shall be excluded from the amounts payable to the Contractor the fair value, as determined by the Construction Manager, of property which is destroyed, lost, stolen or damaged so as to become undeliverable to the County or to another buyer.

00700-42 COST TO CURE

If the County terminates for cause the whole or any part of the work pursuant to this agreement, then the County may procure upon such terms and in such manner as the Construction Manager may deem appropriate, supplies or services similar to those so terminated, and the Contractor shall be liable to the County for any excess costs for such similar supplies or services. The Contractor shall continue the performance of this agreement to the extent not terminated hereunder.

00700-43 ATTORNEY'S FEES

Should the Contractor default pursuant to any of the provisions of this agreement, the Contractor and its surety shall pay to the County such reasonable attorney's fees as the County may expend as a result thereof and all costs, expenses, and filing fees incidental thereto.

00700-44 CONTRACTOR'S RESPONSIBILITIES UPON TERMINATION

After receipt of a notice of termination from the County, and except as otherwise directed by the Construction Manager, the Contractor shall:

1. Stop work under the contract on the date and to the extent specified in the notice of termination;

2. Place no further orders or subcontracts for materials, services or facilities, except as may be necessary for completion of such portion of the work under the agreement as is not terminated;

3. Terminate all orders and subcontracts to the extent that they relate to the performance of work terminated by the notice of termination;

4. Assign to the County in the manner, at the times, and to the extent directed by the Construction Manager, all of the rights, title and interest of the Contractor under the orders and subcontracts so terminated, in which case the County shall have the right, at its discretion, to settle or pay any and all claims arising out of the termination of such orders or subcontracts;

5. Settle all outstanding liabilities and all claims arising out of such termination of orders and subcontracts with the approval or ratification of the Construction Manager, to the extent the Construction Manager may require, which approval or ratification shall be final for all purposes;

6. Transfer title and deliver to the entity or entities designated by the Construction Manager, in the manner, at the times, and to the extent, if any, directed by the Construction Manager, and to the extent specifically produced or specifically acquired by the Contractor for the performance of such portion of the work as has been terminated:

c. The fabricated or un-fabricated parts, work, and progress, partially completed supplies, and equipment, materials, parts, tools, dyes, jigs, and other fixtures, completed work, supplies, and other material produced as a part of or acquired in connection with the performance of the work terminated by the notice of termination; and

d. The completed or partially completed plans, drawings, information, and other property to the work.

7. Use its best efforts to sell in the manner, at the times, to the extent, and at the prices directed or authorized by the Construction Manager, any property described in Section 6 of this paragraph, provided, however, that the Contractor shall not be required to extend credit to any buyer and further provided that the proceeds of any such transfer or disposition shall be applied in reduction of any payments to be made by the County to the Contractor pursuant to this agreement.

8. Complete performance of such part of the work as shall not have been terminated by the notice of termination; and

9. Take such action as may be necessary, or as the Construction Manager may direct, for the protection and preservation of the property related to the agreement which is in the possession of the Contractor and in which the County has or may acquire an interest.

00700-45 RECORDS

The Contractor shall preserve and make available to the County all of its records, books, documents and other evidence bearing on the costs and expenses of the Contractor and any subcontractor pursuant to this agreement upon three days advance notice to the Contractor.

00700-46 DEDUCTIONS

In arriving at any amount due the Contractor pursuant to the terms of this agreement, there shall be deducted all liquidated damages, advance payments made to the Contractor applicable to the termination portion of the contract, the amount of any claim which the County may have against the Contractor, the amount determined

By the Construction Manager to be necessary to protect the County against loss due to outstanding potential liens or claims, and the agreed price of any materials acquired or sold by the Contractor and not otherwise recovered by or credited to the County.

00700-47 REIMBURSEMENT OF THE COUNTY

In the event of termination, the Contractor shall refund to the County any amount paid by the County to the Contractor in excess of the costs properly reimbursable to the Contractor.

00700-48 SUSPENSION, INTERRUPTION, DELAY, DAMAGES

The Contractor shall be entitled to only those damages and that relief from termination by the County as specifically set forth in this agreement. The Construction Manager may issue a written order requiring the Contractor to suspend, delay or interrupt all or any part of the work for such period of time as the County may determine to be appropriate for the convenience of the County. If the performance of the work is interrupted for an unreasonable period of time by an act of the County or any of its officers, agents, employees, contractors, or consultants in the administration of this

agreement, an equitable adjustment shall be made for any increase in the Contractor's costs of performance and any increase in the time required for performance of the work necessarily caused by the unreasonable suspension, delay, or interruption. Any equitable adjustment shall be reduced to writing and shall constitute a modification to this agreement. In no event, however, shall an equitable adjustment be made to the extent that performance of this agreement would have been suspended, delayed or interrupted by any other cause, including the fault or negligence of the Contractor. No claim for an equitable adjustment pursuant to this paragraph shall be permitted before the Contractor shall have notified the Construction Manager in writing of the act or failure to act involved, and no claim shall be allowed unless asserted in writing to the Construction Manager within ten days after the termination of such suspension, delay or interruption.

00700-49 COMMENCEMENT AND DURATION OF WORK

The County may issue a Notice to Proceed at any time within 120 days following execution of the contract by the County. The Contractor shall commence work pursuant to this agreement within ten days of mailing or delivery of written notice to proceed. The Contractor shall diligently prosecute the work to completion within the time specified therefore in the Agreement. The capacity of the Contractor's construction and manufacturing equipment and plan, sequence and method of operation and forces employed, including management and supervisory personnel, shall be such as to insure completion of the work within the time specified in the Agreement. The Contractor and County hereby agree that the contract time for completion of the work is reasonable taking into consideration the average climatic conditions prevailing in the locality of the work and anticipated work schedules of other contractors whose activities are in conjunction with or may affect the work under this contract.

00700-50 TIME OF THE ESSENCE

All time limits stated in this agreement are of the essence of this contract.

00700-51 IMPACT DAMAGES

Except as specifically provided pursuant to a stop work order or change order, the Contractor shall not be entitled to payment or compensation of any kind from the County for direct or indirect or impact damages including, but not limited to, costs of acceleration arising because of delay, disruption, interference or hindrance from any cause whatsoever whether such delay, disruption, interference or hindrance is reasonable or unreasonable, foreseeable or unforeseeable, or avoidable, provided, however, that this provision shall not preclude the recovery of damages by the Contractor for hindrances or delays due solely to fraud or bad faith on the part of the County, its agents, or employees. The Contractor shall be entitled only to extensions in the time required for performance of the work as specifically provided in the contract.

00700-52 DELAY

The Contractor may be entitled to an extension of the contract time, but not an increase in the contract price or damages, for delays arising from unforeseeable causes beyond the control and without the fault or negligence of the Contractor or its subcontractors for labor strikes, acts of God, acts of the public enemy, acts of the state, federal or local government in its sovereign capacity, by acts of another separate contractor, or by an act or neglect of the County.

00700-53 INCLEMENT WEATHER

The Contractor shall not be entitled to an extension of the contract time due to normal inclement weather. Unless the Contractor can substantiate to the satisfaction of the Construction Manager that there was greater than normal inclement weather and that such greater than normal inclement weather actually delayed the work, the Contractor shall not be entitled to an extension of time therefore. The following shall be considered the normal inclement weather days for each month listed, and extensions of time shall be granted in increments of not less than one half day only for inclement weather in excess of the days set out.

January	10 days
February	10 days
March	7 days
April	6 days
May	4 days
June	3 days
July	4 days
August	2 days
September	2 days
October	3 days
November	6 days
December	9 days

00700-54 DELAY - NOTICE AND CLAIM

The Contractor shall not receive an extension of time unless a Notice of Delay is filed with the Construction Manager within ten days of the first instance of such delay, disruption, interference or hindrance and a written Statement of the Claim is filed with the Construction Manager within 20 days of the first such instance. In the event that the Contractor fails to comply with this provision, it waives any claim which it may have for an extension of time pursuant to this agreement.

00700-55 STATEMENT OF CLAIM - CONTENTS

The Statement of Claim referenced in Article 00700-54 shall include specific information concerning the nature of the delay, the date of commencement of the delay, the construction activities affected by the delay, the person or organization responsible for the delay, the anticipated extent of the delay, and any recommended action to avoid or minimize the delay.

00700-56 WORK BEHIND SCHEDULE, REMEDY BY CONTRACTOR

If the work actually in place falls behind the currently updated and approved schedule, and it becomes apparent from the current schedule that work will not be completed within the contract time, the Contractor agrees that it will, as necessary, or as directed by the Construction Manager, take action at no additional cost to the County to improve the progress of the work, including increasing manpower, increasing the number of working hours per shift or shifts per working day, increasing the amount of equipment at the site, and any other measure reasonably required to complete the work in a timely fashion.

00700-57 DILIGENCE

The Contractor's failure to substantially comply with the requirements of the preceding paragraph may be grounds for determination by the County that the Contractor is failing to prosecute the work with such diligence as will insure its completion within the time specified. In such event, the County shall have the right to furnish, from its own forces or by contract, such additional labor and materials as may be required to comply with the schedule after 48 hours written notice to the Contractor, and the Contractor shall be liable for such costs incurred by the County.

00700-58 SET-OFFS

Any monies due to the Contractor pursuant to the preceding paragraph of this agreement may be deducted by the County against monies due from the County to the Contractor.

00700-59 REMEDIES CUMULATIVE

The remedies of the County under Articles 00700-56, 00700-57, and 00700-58 are in addition to and without prejudice to all of the rights and remedies of the County at law, in equity, or contained in this agreement.

00700-60 TITLE TO MATERIALS

No materials or supplies shall be purchased by the Contractor or by any Subcontractor subject to any chattel mortgage or under a conditional sales contract or other agreement by which any interest is retained by the seller. The Contractor hereby warrants that it has good and marketable title to all materials and supplies used by it in the work, and the Contractor further warrants that all materials and supplies shall be free from all liens, claims, or encumbrances at the time of incorporation in the work.

00700-61 INSPECTION OF MATERIALS

All materials and equipment used in the construction of the project shall be subject to adequate inspection and testing in accordance with accepted standards and in accordance with the requirements of the contract documents. Additional tests performed after the rejection of materials or equipment shall be at the Contractor's expense.

00700-62 CONSTRUCTION MANAGER'S PRESENCE DURING TESTING

All tests performed by the Contractor shall be witnessed by the Construction Manager unless the requirement therefore is waived in writing. The Construction Manager may perform additional tests on materials previously tested by the Contractor, and the Contractor shall furnish samples for this purpose as requested.

00700-63 MATERIALS INCORPORATED IN WORK

The Contractor shall furnish all materials and equipment to be incorporated in the work. All such materials or equipment shall be new and of the highest quality available. Manufactured materials and equipment shall be obtained from sources which are currently manufacturing such materials, except as otherwise specifically approved by the Construction Manager.

00700-64 STORAGE OF MATERIALS

Materials and equipment to be incorporated in the work shall be stored in such a manner as to preserve their quality and fitness for the work and to facilitate inspection.

00700-65 PAYROLL REPORTS

The Contractor may be required to furnish payroll reports to the Construction Manager as required by the Owner Controlled Insurance Program.

00700-66 CONTRACTORS' REPRESENTATIVE

Before beginning work, the Contractor shall notify the Construction Manager in writing of one person within its organization who shall have complete authority to supervise the work, receive orders from the Construction Manager, and represent the Contractor in all matters arising pursuant to this agreement. The Contractor shall not remove its representative without first designating in writing a new representative. The Contractor's representative shall normally be present at or about the site of work while the work is in progress. When neither the Contractor nor its representative is present at the work site, the superintendent, foreman, or other of the Contractor' employee in charge of the work shall be an authorized representative of the Contractor.

00700-67 SPECIALTY SUB-CONTRACTORS

The Contractor may utilize the services of specialty subcontractors on those parts of the project which, under normal contracting practices, are performed by specialty subcontractors. The Contractor shall not award more than seventy-five percent of the work to subcontractors.

00700-68 INSPECTION BY THE CONSTRUCTION MANAGER

All work pursuant to this agreement shall be subject to inspection by the Construction Manager for conformity with contract drawings and specifications. The Contractor shall give the Construction Manager reasonable advance notice of operations requiring special inspection of a portion of the work.

00700-69 WORK COVERED PRIOR TO CONSTRUCTION MANAGER'S INSPECTION

In the event that work is covered or completed without the approval of the Construction Manager, and such approval is required by the specifications or required in advance by the Construction Manager, the Contractor shall bear all costs involved in inspection notwithstanding conformance of such portion of the work to the contract drawings and specifications.

00700-70 SCHEDULING OF THE WORK

The work of this contract shall be planned, scheduled, executed, and reported as required by the Contract Documents.

00700-71 PROGRESS ESTIMATES

The Contractor shall prepare a written report for the Construction Manager's approval, on County forms, of the total value of work performed and materials and equipment obtained to the date of submission. Such a report must accompany each request for a progress payment and is subject to review and approval by the Construction Manager. Approval of a progress estimate or tendering of a progress payment shall not be considered an approval or acceptance of any work performed, and all estimates and payments shall be subject to correction in subsequent estimates. Progress payments shall be made for all completed activities and for materials suitably stored on-site.

00700-72 PROGRESS PAYMENTS

Upon approval of each monthly estimate of work performed and materials furnished, the Construction Manager shall approve payment to the Contractor for the estimated value

of such work, materials, and equipment, less the amount of all prior payments and any liquidated damages. The Contractor will be paid 100 percent, less retainage, of the cost of materials received and properly stored on-site but not incorporated into the work. Payments for materials or equipment stored on the site shall be conditioned upon submission by the Contractor of bills of sale to establish the County's title to such materials or equipment. The Contractor's request for payment shall provide sufficient detail as to the work completed or materials purchased for which payment is requested to permit meaningful review by the Construction Manager.

00700-73 TIME OF PAYMENT

The Contractor will be paid within 45 days following receipt of an approved Progress Estimate. The Contractor expressly agrees that the payment provisions within this Contract shall supersede the rates of interest, payment periods, and contract and subcontract terms provided for under the Georgia Prompt Pay Act, O.C.G.A. §13-11-1 et seq., and that the rates of interest, payment periods, and contract and subcontract terms provided for under the Prompt Pay Act shall have no application to this Contract. The County shall not be liable for any late payment interest or penalty.

00700-74 RETAINAGE

The County shall retain from each progress payment ten percent of the estimated value of the work performed until the progress payments, including retainage, total 50 percent of the contract price. If a contract includes two or more projects or assignments that have been separately priced and have separate budgets, and the performances of such projects or assignments are not related to or dependent upon the performance of any other, the 50 per cent limit shall be based upon the price for each individual project or assignment. Thereafter, no further retainage shall be withheld so long as the Contractor is making satisfactory progress to insure completion of the work within the time specified therefore. The County may reinstate the ten percent retainage in the event the Construction Manager determines that the Contractor is not making satisfactory progress to complete the work within the time specified in this agreement or in the event that the Construction Manager provides a specific cause for such withholding. The County may also withhold retainage upon substantial completion of the work as provided in O.C.G.A. §13-10-81(c). Interest may be paid upon the retainage in accordance with Georgia law.

00700-75 PAYMENT OF SUBCONTRACTORS

The Contractor shall promptly pay each subcontractor upon the receipt of payment from the County. Such payment shall be made from the amount paid to the Contractor pursuant to the subcontractor's work. The Contractor shall also maintain the records of the percentage retained from payments to the Contractor pursuant to such subcontractor's work. The Contractor shall procure agreements from each subcontractor requiring each subcontractor to pay their subcontractors, agents and employees in a similar manner. The County reserves the right to inquire of any subcontractor, supplier, materialmen, or subconsultant, the status of any indebtedness of the Contractor. The County further reserves the right to require the Contractor to designate on each instrument of payment exceeding $400.00 to subcontractors, suppliers, materialmen, and subconsultants that such payment is on account of the work under this Contract.

00700-76 COUNTY'S RESPONSIBILITIES TO SUBCONTRACTORS

Neither the County nor the Construction Manager shall have any obligation to pay any subcontractor except as otherwise required by law.

00700-77 PROGRESS PAYMENTS - ACCEPTANCE OF WORK

Certification of progress payments, as well as the actual payment thereof, shall not constitute the County's acceptance of work performed pursuant to this agreement.

00700-78 PAYMENTS IN TRUST

All sums paid to the Contractor pursuant to this agreement are hereby declared to constitute trust funds in the hands of the contractor to be applied first to the payment of claims of subcontractors, laborers, and suppliers arising out of the work, to claims for utilities furnished and taxes imposed, and to the payment of premiums on surety and other bonds and on insurance for any other application.

00700-79 JOINT PAYMENTS

The County reserves the right to issue any progress payment or final payment by check jointly to the Contractor and any subcontractor or supplier.

00700-80 RIGHT TO WITHHOLD PAYMENT

The Construction Manager may decline to approve payment and may withhold payment in whole or in part to the extent reasonable and necessary to protect the County against loss due to defective work, probable or actual third party claims, the Contractor's failure to pay subcontractors or materialmen, reasonable evidence that the work will not be completed within the contract time or contract price or damage to the County or any other contractor on the project.

00700-81 CERTIFICATE OF SUBSTANTIAL COMPLETION

Upon the Contractor's submission of a request for a certificate of Substantial Completion, the Construction Manager shall inspect the work and determine whether the work is Substantially Complete. If the work is Substantially Complete, the Construction Manager shall issue a certificate of Substantial Completion of the work which shall establish the date of Substantial Completion, shall state the responsibilities of the County and the Contractor for security, maintenance, heat, utilities, damage to the work and insurance, and shall fix the time within which the Contractor shall complete the items submitted by the Contractor as requiring correction or further work. The certificate of substantial completion of the work shall be submitted to the County and the Contractor for their written acceptance of the responsibilities assigned to them pursuant to such certificate.

If in the sole opinion of the Construction Manager, the work is not substantially complete, the Construction Manager shall notify the Contractor of such, in writing, and outline requirements to be met to achieve Substantial Completion.

00700-82 PAYMENT UPON SUBSTANTIAL COMPLETION

Upon Substantial Completion of the work and upon application by the Contractor and approval by the Construction Manager, the County shall make payment reflecting 100% work completed, less value of work remaining as determined by Construction Manager and any authorized retainage.

00700-83 COMMENCEMENT OF WARRANTIES

Warranties required by this agreement shall commence on the date of final completion of the project as determined under Article 00700-84 unless otherwise provided in the certificate of Substantial Completion.

00700-84 FINAL PAYMENT - WAIVER OF CLAIMS, DISPUTE OF FINAL PAYMENT

The acceptance of the Substantial Completion payment shall constitute a waiver of all claims by the Contractor except those previously made in writing and identified by the Contractor as unsettled at the time of application for payment at Substantial Completion and except for the retainage sums due at final acceptance. Following the Construction Manager's issuance of the certificate of Substantial Completion and the Contractor's completion of the work pursuant to this agreement, the Contractor shall forward to the Construction Manager a written notice that the work is ready for final inspection and acceptance. If after inspection the Construction Manager certifies that the work is complete and issues written notification of such to the Contractor, the Contractor shall forward to the Construction Manager a final application for payment. The Construction Manager shall issue a certificate for payment, which shall approve final payment to the Contractor and shall establish the date of final completion.

In the event the Contractor timely disputes the amount of the final payment, the amount due the Contractor shall be deemed by the Contractor and the County to be an unliquidated sum and no interest shall accrue or be payable on the sum finally determined to be due to the Contractor for any period prior to final determination of such sum, whether such determination be by agreement of the Contractor and the County or by final judgment of the proper court in the event of litigation between the County and the Contractor. The Contractor specifically waives and renounces any and all rights it may have under O.C.G.A. §13-6-13 and agrees that in the event suit is brought by the Contractor against the County for any sum claimed by the Contractor under the Contract or for any extra or additional work, no interest shall be awarded on any sum found to be due from the County to the Contractor in the final judgment entered in such suit. All final judgments shall draw interest at the legal rate, as specified by law.

00700-85 DOCUMENTATION OF COMPLETION OF WORK

Neither the final payment nor the remaining retainage shall become due until the Contractor submits the following documents to the Construction Manager:

d. An affidavit that all payrolls, bills for materials and equipment, and other indebtedness connected with the work have been paid other otherwise satisfied;

e. The surety's consent to final payment; and

f. Any other data reasonably required by the County or Construction Manager establishing payment or satisfaction of all such obligations, including releases, waivers of liens, and documents of satisfaction of debts.

In the event that a subcontractor refuses to furnish a release or waiver as required by the County or Construction Manager, the Contractor may furnish a bond satisfactory to the County to indemnify the County against such loss. In the event that any lien or indebtedness remains unsatisfied after all payments are made, the contractor shall refund to the County all moneys that the County may become compelled to pay in discharging such lien or other indebtedness, including all costs and reasonable attorney's fees.

00700-86 GOVERNING LAW

Each and every provision of this agreement shall be construed in accordance with and governed by Georgia law. The parties acknowledge that this contract is executed in

Fulton County, Georgia and that the contract is to be performed in Fulton County, Georgia. Each party hereby consents to the Fulton Superior Court's sole jurisdiction over any dispute which arises as a result of the execution or performance of this agreement, and each party hereby waives any and all objections to venue in the Fulton Superior Court.

00700-87 CHANGES IN THE WORK

F. CHANGE ORDERS

9. A Change Order is a written order to the Contractor signed to show the approval and the authorization of the County, issued after execution of the Contract, authorizing a change in the Work and/or an adjustment in the Contract Sum or the Contract Time. Change Orders shall be written using forms designated by the County with Contractor providing supporting documentation as required by the Construction Manager. The Contract Sum and the Contract Time may be changed only by approved Change Order pursuant to Fulton County Procedure 800-6. The amount payable by the Change Order is payment in full for all direct and indirect costs incurred and related to the work under said Change Order, including but not limited to delays, imports, acceleration, disruption and extended overhead. A Change Order signed by the Contractor indicates the Contractor's agreement therewith, including the adjustment in either or both of the Contract Sum or the Contract Time.

10. The County, without invalidating the Contract, may order changes in the Work within the general scope of the Contract as defined herein. The time allowed for performance of the work and the contract price to be paid to the Contractor may be adjusted accordingly.

11. The cost or credit to the County resulting from a change in the Work shall be determined in one or more of the following ways:

    a. By mutual acceptance of a lump sum properly itemized and supported by sufficient substantiating data to permit evaluation;

    b. By unit prices stated in the Contract Documents or subsequently agreed upon;

    c. By cost to be determined in a manner agreed upon by the parties and a mutually acceptable fixed or percentage fee; or

    d. By the method provided in Subparagraph A4 below.

12. If none of the methods set forth in Subparagraphs 3a, 3b, or 3c above is agreed upon, the Contractor, provided a written order signed by the Construction Manager is received, shall promptly proceed with the Work involved. The cost of such Work shall then be determined by the Construction Manager on basis of the reasonable expenditures and savings of those performing the Work attributable to the change. The cost of the change shall include only the items listed in Subparagraph 5a below, and in the case of either a decrease or an increase in the Contract Sum, an allowance for overhead and profit in accordance with the schedules set forth in Subparagraphs 5b and 6 below shall be applied to the cost or credit.

a. In such case, and also under Subparagraph 3a above, the Contractor shall keep and present, in such form as the Construction Manager may prescribe, an itemized accounting of all actual costs expended, together with appropriate supporting data for inclusion in a Change Order.

b. All hourly rate charges shall b submitted to the Construction Manager for prior review and approval. All hourly rate charges shall be properly supported as required by the Construction Manager with certified payrolls, or their acceptable equivalent. When authorized to proceed for a given change and actual expenditures have been made prior to execution of a Change Order for the entire change, such actual expenditures may be summarized monthly, and if approved, incorporated into a Change Order. When both additions and credits covering related Work or substitutions are involved in any one change, the allowance for overhead and profit shall be figured on the basis of the net increase or decrease, if any, with respect to that change.

13. In Subparagraphs 3 and 4 above, the items included in “Cost and “Overhead” shall be based on the following schedule:

a. Unless otherwise provided in the Contract Documents, “Cost” shall be limited to the following: cost of materials incorporated into the Work, including sales tax and cost of delivery; cost of direct labor (labor cost may include a pro rata share of foreman’s account of the change) including social security, old age and unemployment insurance, and fringe benefits required by agreement or custom; workers’ or workmen’s compensation insurance; rental value of equipment and machinery; costs for preparing Shop Drawings.

b. Unless otherwise provided in the Contract Documents, “Overhead” shall include the following: bond and insurance premiums including increase and decreases from change in the Work, supervision, superintendence, construction parking, wages of timekeepers, watchmen and clerks, small tools, consumable supplies, expendables, incidentals, general office expense, the cost of additional reproduction for the Contractor’s subcontractors beyond that agreed upon in the Contract Documents, construction parking, any additional costs of craft supervision by the Contractor’s or subcontractors’ superintendents, and overhead charges which would be customary and expended regardless of the change in the Work due to other overlapping activities which are included as part of the original Contract, and all other expenses not included in “Cost” above.

c. In the event that a change is issued by the County which would require the expenditure of substantial amounts of special supervision (beyond the foreman level) by the Contractor, the Contractor may, at the sole direction of the Construction Manager, be allowed to incorporate these charges into the agreement cost for the change.

14. In Subparagraphs 3 and 4 above, the allowance for overhead and profit combined, included in the total cost or credit to the County, shall be based on the following schedule:

    a. For the Contractor, for any work performed by the Contractor's own forces, ten (10) percent of the cost.

    b. For the Contractor, for any work performed by a Contractor's subcontractor, five (5) percent of the amount due the subcontractor.

    c. For each subcontractor or sub-subcontractor involved, for any work performed by that subcontractor's or sub-subcontractor's own forces, ten (10) percent of the cost.

    d. For each subcontractor, for work performed by a sub-subcontractor, five (5) percent of the amount due to the sub-subcontractor.

    e. Cost to which overhead and profit is to be applied shall be determined in accordance with Subparagraph 5 above unless modified otherwise.

15. In order to facilitate checking of quotations for extras or credits, all proposals or bids, except those so minor that their propriety can be seen by inspection, shall be accompanied by a complete itemization of costs, including labor cost, materials and subcontracts. Labor and materials shall be itemized in the manner defined in Subparagraph 4 above. Where major cost items are subcontracts, they shall be itemized also. In no case shall a change be approved without such itemization.

16. No payment shall be made for any changes to the contract that are not included in a fully executed Change Order.

G. CONCEALED, UNKNOWN AND DIFFERING CONDITIONS

6. Should concealed conditions be encountered in the performance of the Work below the surface of the ground, or should concealed or unknown conditions in an existing structure be at variance with the conditions indicated by the Contract Documents, or should unknown physical conditions below the surface of the ground or concealed or unknown conditions in an existing structure of an unusual nature, differing materially from those ordinarily encountered and generally recognized as inherent in work of the character provided for in this Contract, be encountered, the Contract Sum and Contract Time shall be equitably adjusted by Change Order upon request by either party made **within twenty (20) days after the first observance** of the conditions. No such request for equitable adjustment shall be valid unless the Contractor complies with this (20) days notice and Subparagraph C.1. below.

7. The Contractor shall promptly, and before such conditions are disturbed, notify the Construction Manager in writing of any claim of concealed, unknown or differing conditions pursuant to this paragraph. The Construction Manager shall authorize the Engineer to investigate the conditions, and if it is found that such conditions do materially so differ and cause an increase or decrease in the Contractor's cost of, or the time

required for, performance of any part of the Work under this Contract, whether or not changed as a result of such conditions, an equitable adjustment shall be recommended to the Construction Manager.

8. No claim of the Contractor under this clause shall be allowed unless the Contractor has given the notice required in (a) above, prior to disturbing the condition.

9. No claim by the Contractor for an equitable adjustment shall be allowed if asserted after final payment under this Contract.

10. Any materially differing site condition as between what is shown on the Drawings and Specifications and actually found on site shall be immediately reported to the Construction Manager in writing prior to the commencement of Work at the site. Failure of the Contractor to notify the Construction Manager in writing of the differing site condition prior to performance of Work at the site shall constitute a waiver of any claim for additional monies. Any Change Order necessitated by the differing site condition shall be processed as provided under "Changes in the Contract".

H. REQUESTS FOR ADDITIONAL COST

3. If the Contractor wishes to request an increase in the Contract Sum, the Contractor shall give the Construction Manager written notice thereof within twenty (20) days after the occurrence of the event, or identification of the conditions, giving rise to such request. This notice shall be give by the Contractor before proceeding to execute the Work, except in an emergency endangering life or property in which case the Contractor shall proceed in accordance with Article 00700-25 and Subparagraph A.4 above. No such request shall be valid unless so made within the twenty (20) days specified above. If the County and the Contractor cannot agree on the amount of the adjustment in the Contract Sum, it shall be determined by the Construction Manager. Any change in the Contract Sum resulting from such claim shall be documented by Change Order.

4. If the Contractor claims that addition cost is involved because of, but not limited to (1) any written interpretation pursuant to General Condition 00700-17 of this Agreement, (2) any order by the County to stop the Work pursuant to Articles 00700-25 and 00700-37 of this Agreement where the Contractor was not at fault, or any such order by the Construction Manager as the County's agent, or (3) any written order for a minor change in the Work issued pursuant to Paragraph D below, the Contractor shall submit a request for an increase in the Contract Sum as provided in Subparagraph C.1 above. No such claim shall be valid unless the Contractor complies with Subparagraph C.1 above and approved by the County pursuant to Change Order Policy 800-6.

I. MINOR CHANGES IN THE WORK

The Construction Manager may order minor changes in the Work not involving an adjustment in the Contract Price, extension of the time allowed for performance of the work and not inconsistent with the intent of the Contract Documents. Such changes shall be effected by a written Change Directive issued by the Construction Manager, and

shall be binding on the County and the Contractor. The Contractor shall carry out such written orders promptly.

J. BONDS

If any change order results in an increase in the contract price, the contractor shall increase the penal sum of the performance and payment bonds to equal the increased price.

00700-88 DISAGREEMENT WITH ORDERS FOR CHANGE

Contractor's written acceptance of a Change Order or other order for changes shall constitute his final and binding agreement to the provisions thereof and a waiver of all claims in connection therewith, whether direct or consequential in nature. Should Contractor disagree with any order for changes, he may submit a notice of potential claim to the Construction Manager, at such time as the order is set forth in the form of a Change Order. Disagreement with the provisions of an order for changes shall not relieve Contractor of his obligation under Article 00700-87 of this Agreement.

00700-89 NO WAIVER OF REMEDIES

Exercise by the County of any remedy is not exclusive of any other remedy available to County and shall not constitute a waiver of any such other remedies. Failure of the County to exercise any remedy, including breach of contract remedies, shall not preclude the County from exercising such remedies in similar circumstances in the future.

00700-90 LAND AND RIGHTS-OF-WAY

The owner will provide, as indicated in the Contract Documents and prior to Notice to Proceed, the lands upon which the work is to be done, right-of-way for access thereto, and such other lands which are designated for the use of the Contractor. The Contractor shall confine the Contractor's work and all associated activities to the easements and other areas designated for the Contractor's use. The Contractor shall comply with any limits on construction methods and practices which may be required by easement agreements. If, due to some unforeseen reason, the necessary easements are not obtained, the Contractor shall receive an equitable extension of contract time dependent upon the effect on the critical path of the project schedule or the County may terminate the Contract for its convenience.

00700-91 COORDINATION WITH STATE DEPARTMENT OF TRANSPORTATION

No clearing or grading shall be completed by Contractor within the State Department of Transportation (DOT) area under construction. The Contractor must coordinate his construction scheduling with DOT.

If the Contractor begins work before DOT's completion date, he must obtain the approval of DOT before starting work in the area. The state DOT has the right to stop the Contractor's work the DOT area.

The Contractor shall receive no additional compensation or damages resulting from delay or work stoppage from DOT actions or scheduling.

Contractor shall obtain DOT drawings of the DOT, project area for verification of road geometry, storm drains, etc. from Georgia Department of Transportation or Fulton County. The Contractor is responsible for obtaining any pertinent DOT revisions.

I N D E X

SUBJECT	GENERAL CONDITION ARTICLE #
Administration of Contract	17
Applicable Law	7
Assignment	13
Blasting and Excavation	26
Changes	87, 88
Clean Site	29
Codes	4
Commencement of Work	49
Contract Documents	2
Contractor's Representative	66
Defective Work	31, 32
Definitions	3
Delay	51, 52, 54, 55
Extension of Time	52, 53, 54
Familiarity of Time	1, 22
Final Payment	84
Governing Law	86
High Voltage Lines	27
Inclement Weather	53
Indemnification	15
Inspections	23, 61, 62, 68, 69
Interruption	48
Licenses	8
Liquidated Damages	46, 48
New Materials	33, 63
Notices	24
Payment	72, 73, 75
Payment of Subcontractors	75, 76
Payment Upon Substantial Completion	82, 84
Payroll Reports	65
Permits	8

Progress Payments 72, 73, 77, 78, 79, 80
Protection of Work 30, 64
Records Inspection 45
Retainage 11, 74
Safety 25
Scaffolding and Staging 28
Scheduling 70
Service of Process 14
Stop Work Order 37
Subcontractors 67, 76
Substantial Completion 81
Suspension 48
Supervision of Work 16, 66
Surety's Responsibility 17
Taxes 9, 10
Termination for Cause 38, 44, 47
Termination for Convenience 39, 40, 41
Time of the Essence 50
Warranties 33, 34, 35, 36
Work Behind Schedule 56

EXHIBIT A

FINAL AFFIDAVIT

TO FULTON COUNTY, GEORGIA

I, _____, hereby certify that all suppliers of materials, equipment and service, subcontractors, mechanic, and laborers employed by _____ or any of his subcontractors in connection with the design and/or construction of _____ at Fulton County have been paid and satisfied in full as of _____, 200___, and that there are no outstanding obligations or claims of any kind for the payment of which Fulton County on the above-named project might be liable, or subject to, in any lawful proceeding at law or in equity.

_____
Signature

_____
Title

Personally appeared before me this _____ day of _____, 20_____. _____, who under Oath deposes and says that he is _____of the firm of _____, that he has read the above statement and that to the best of his knowledge and belief same is an exact true statement.

_____
Notary Public

_____
My Commission expires

END OF SECTION

SECTION 9

SPECIAL CONDITIONS

The unit or lump sum price for each of the several items in the Bid of each Bidder shall include its pro rata share of overhead and profit so that the sum of the products, obtained by multiplying the quantity shown for each item by the unit price, represents the total Bid. Any Bid not conforming to this requirement may be rejected. Additionally, Unbalanced Bids or conditional Bids will be subject to rejection. The special attention of all Bidders is called to this provision, for should conditions make it necessary to revise the quantities, no limit will be fixed for such increased or decreased quantities nor extra compensation allowed.

Under Emergency Conditions: the cost of labor and equipment are included when the County needs manpower or additional equipment to assist in making emergency **NOT** apply when work is performed under non-emergency conditions. The Notice to Proceed for each project will indicate emergency or non-emergency project status. repairs other than those specified as unit price items. Hourly rate items shall

SECTION 10

EXHIBITS

SECTION 11

Drawings

INDEX

DWG NO.	DESCRIPTION
100	INDEX AND GENERAL NOTES
101	UTILITY LOCATION DETAIL
102	CONDUIT LOCATION FOR UNDERGROUND UTILITIES COMBINATION SEWER EASE
103	ALLOWABLE TRENCH WIDTHS WATER MAINS
104	REINFORCED PLASTIC STEP
105	STRUCTURE ADJUSTMENT
106	MANDREL DETAIL FOR PVC PIPE INSTALLATION
107	ROADWAY CROSSING BORE AND CASE DETAIL
108	TRENCH TERMINOLOGY
109	PAVEMENT CUT REPAIRS TYPE A, B, & C
110	CONCRETE ENCASEMENT
111	BRICK MANHOLE DETAIL AND MANHOLE FRAME AND COVER
112	SAFETY PLATFORM FOR DEEP PRECAST MANHOLES
113	MANHOLES PRECAST DETAILS
114	STANDARD SEWER MANHOLES PRECAST MANHOLES
115	STANDARD SEWER MANHOLES PRECAST CONCRETE
116	AIR AND VACUUM RELEASE VALVE ASSEMBLY
117	PIPE SEWER DATA PVC PIPE INSTALLATION
118	PIPE SEWER DATA
119	TYPICAL PIPE HANGER AND SUPPORT DETAILS
120	MAXIMUM PERMISSIBLE JOINT DEFLECTIONS
121	MECHANICAL JOINT BOLT USAGE CHART
122	TAPPING SLEEVE AND VALVE INSTALLATION DETAILS
123	TAPPING SLEEVE LENGTH
124	STUB OUT DETAIL
125	THRUST RESTRAINT CONCRETE COLLAR
126	THRUST RESTRAINT: TIE ROD CHART
127	THRUST RESTRAINT: TIE ROD INSTALLATION
128	THRUST RESTRAINTS STRAP AND ROD DETAILS
129	CASING/PIPE SUPPORT INSTALLATION
130	PIPE JOINING: USE OF SOLID SLEEVE
131	DRIVEWAY CUT REPAIRS CONCRETE, GRAVEL & ASPHALT
132	STANDARD THRUST BLOCKS FOR WATER
133	MAIN EXTENSION BLOCKING DETAILS SUBDIVISION INTERSECTION-VALVE MAIN
134	SIDEWALK, CURB AND GUTTER REPAIRS

GENERAL NOTES

FULTON COUNTY STANDARD DETAIL
INDEX AND GENERAL NOTES

DATE	REVISIONS	DATE	REVISIONS

DGS/DRN/CHKD: CMS
APPROVED: REW
DATE: 12-02-05

FULTON COUNTY

FULTON COUNTY PUBLIC WORKS
141 PRYOR ST. ATLANTA, GA. 30303
404-730-7400 FAX: 404-730-6325

DRAWING NO. 100

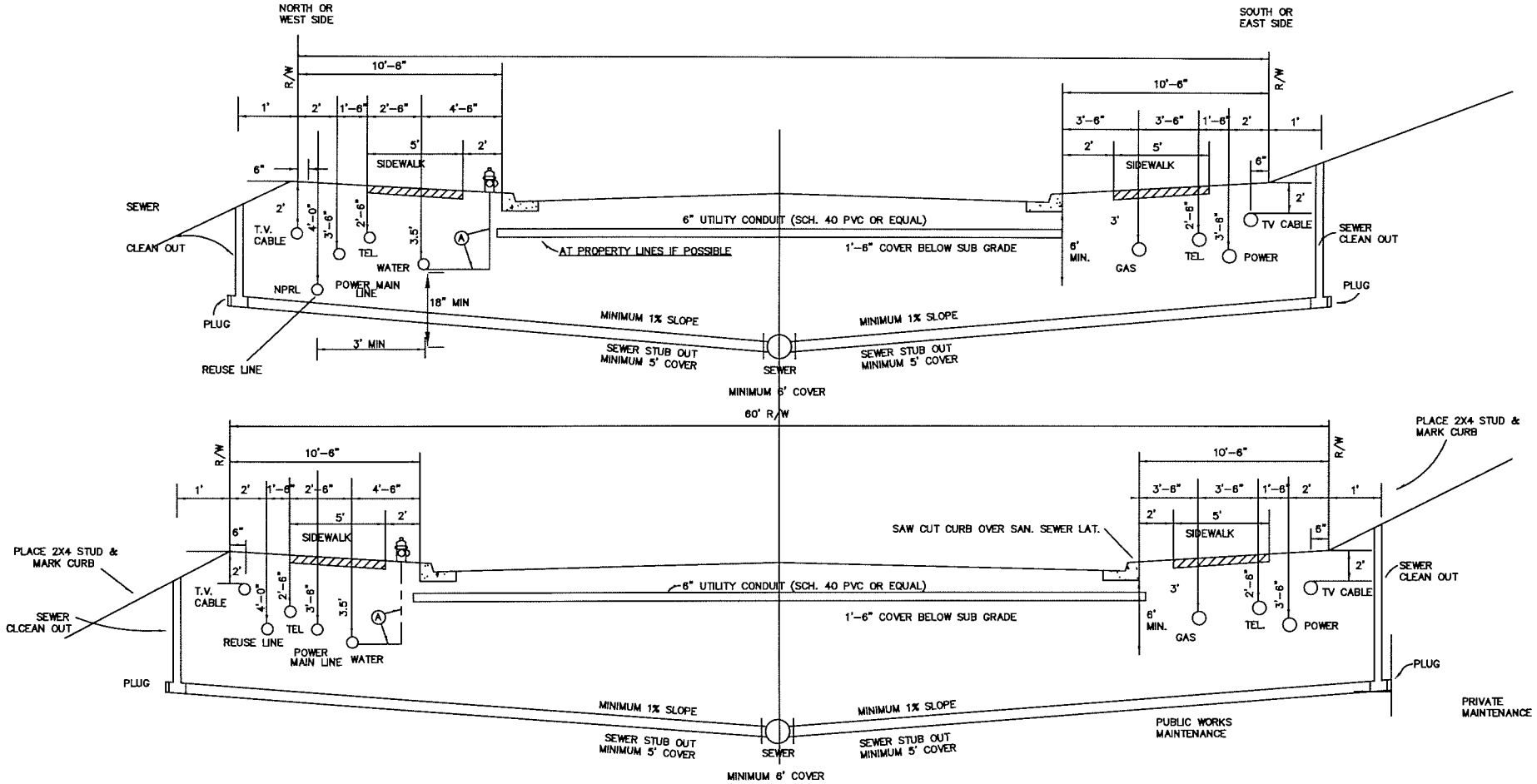

FULTON COUNTY STANDARD DETAIL 101 UTILITY LOCATION UNDERGROUND UTILITY WITH REUSE TYPICAL CROSS SECTION		DATE	REVISIONS	DATE	REVISIONS	DGS/DRN/CHKD: CMS APPROVED: REW DATE: 12-2-05	FULTON COUNTY	FULTON COUNTY PUBLIC WORKS 141 PRYOR ST. ATLANTA, GA. 30303 404-730-7400 FAX: 404-224-0498	DRAWING NO. 101

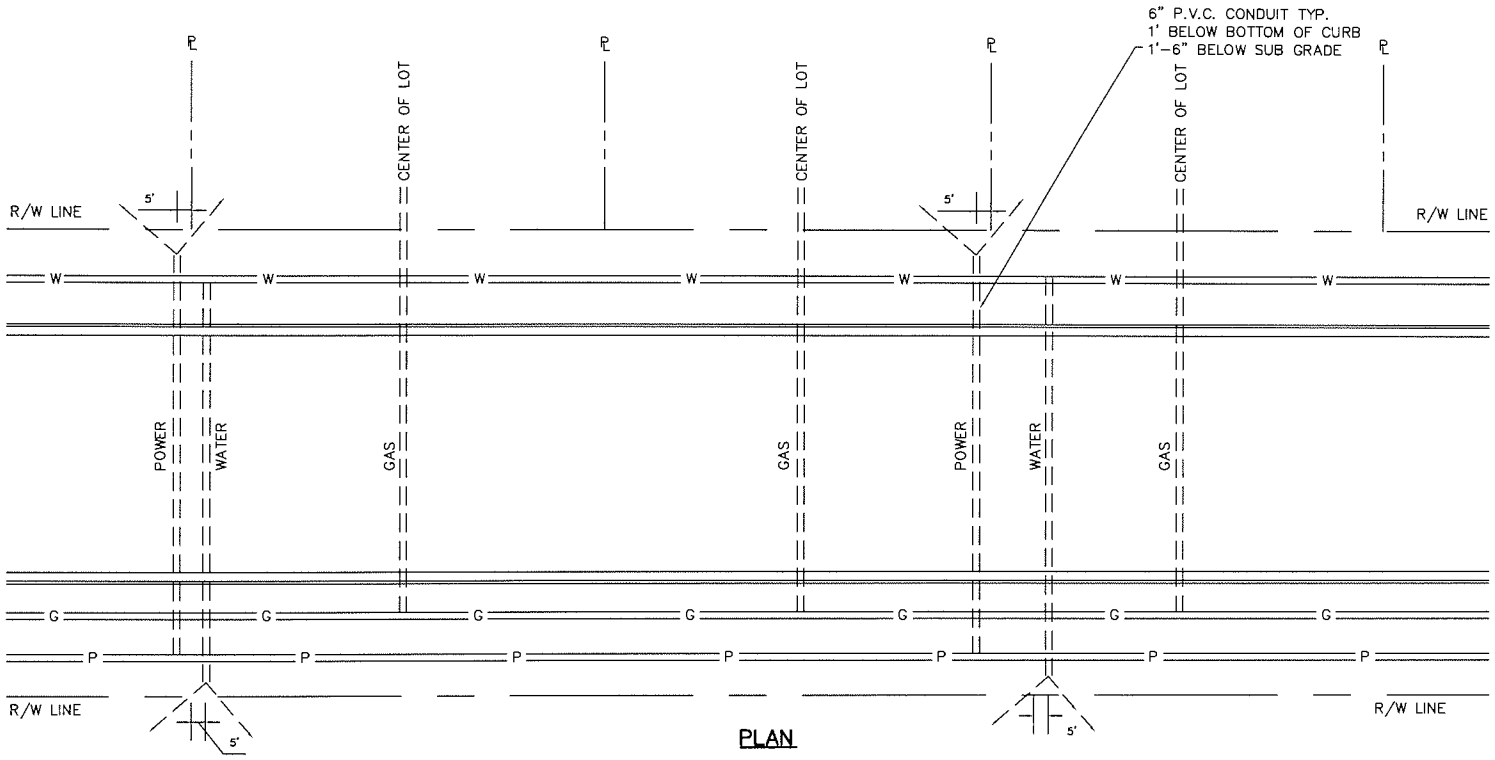

PLAN

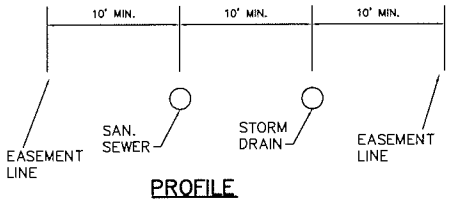

PROFILE
N.T.S.

TYPICAL COMBINATION SAN. SEWER
AND STORM DRAIN PERMANENT EASEMENT

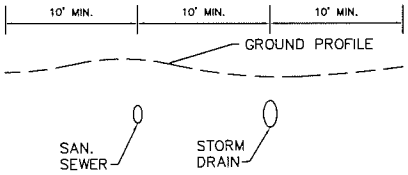

PROFILE VIEW
N.T.S.

FULTON COUNTY STANDARD DETAIL 102 CONDUIT LOCATION FOR UNDERGROUND UTILITIES COMBINATION SEWER EASEMENT		DATE	REVISIONS	DATE	REVISIONS	DGS/DRN/CHKD: CMS APPROVED: REW DATE: 12-2-05	FULTON COUNTY FULTON COUNTY PUBLIC WORKS 141 PRYOR ST. ATLANTA, GA. 30303 404-730-7400 FAX: 404-224-0498	DRAWING NO. 102

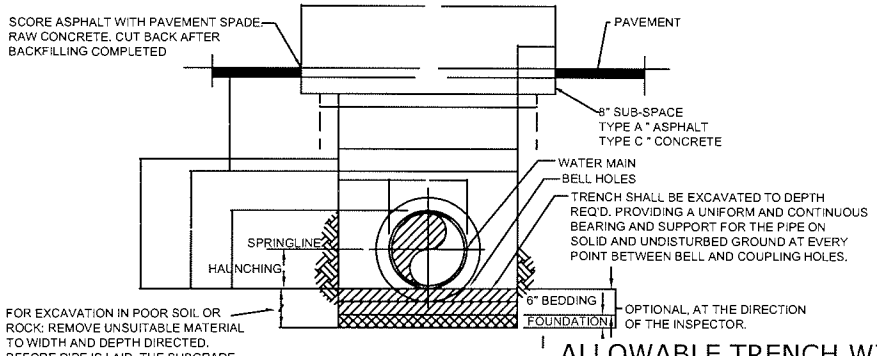

FOR EXCAVATION IN POOR SOIL OR ROCK: REMOVE UNSUITABLE MATERIAL TO WIDTH AND DEPTH DIRECTED. BEFORE PIPE IS LAID, THE SUBGRADE SHALL BE BACKFILLED WITH AN APPROVED MATERIAL IN 3" LAYERS. EACH LAYER SHALL BE THOROUGHLY TAMPED TO 95 % COMPACTION.

NOTES:

1. COMPACTION: BACKFILLS SHALL BE BUILT-UP IN LAYERS AND EACH LAYER SHALL BE THOROUGHLY COMPACTED BEFORE BEGINNING ANOTHER LAYER. LAYERS SHALL BE NO MORE THAN 6" IN DEPTH. PUDDLING WILL NOT BE PERMITTED, NOR WILL FROZEN OR WET MATERIAL BE PLACED IN TRENCHES.
2. COMPACTION STANDARDS: ALL BACKFILL MATERIALS USED SHALL CONTAIN A SUFFICIENT AMOUNT OF MOISTURE FOR PROPER COMPACTION AND THESE MATERIALS SHALL BE COMPACTED AT NOT LESS THAN 95% OF THEIR OPTIMUM COMPACTION FOR ANY SPECIFIC SOIL CLASSIFICATION AS DETERMINED BY THE MODIFIED PROCTOR TEST A STM. D698
3. COMPACTION TESTS: COMPACTION TESTS MAY BE REQUIRED IN EXISTING OR PROPOSED STREETS, SIDEWALKS, DRIVES AND OTHER EXISTING OR PROPOSED PAVED AREAS AT VARYING DEPTHS AND AT INTERVALS AS DETERMINED BY THE ENGINEER WITH A MINIMUM OF ONE TEST PER JOB, AND A MAXIMUM OF ONE REQUIRED TEST FOR EACH 400' OR LESS OF WATER MAIN CONSTRUCTION, UNLESS SOIL CONDITIONS OR CONSTRUCTION PRACTICES, IN THE OPINION OF THE ENGINEER, WARRANT THE NEED FOR ADDITIONAL TESTS.
4. NO BOULDERS OR LOOSE ROCKS PERMITTED IN THE BACKFILL AT THE BOTTOM OF PIPE TRENCH TO 2'-0" ABOVE PIPE.
5. ALL DESIGNS BASED ON FULLY COMPACTED BACKFILL AND UNIFORMLY SUPPORTED PIPE.
7. FOR PAVEMENT CUT REPAIRS SEE DRAWING 109.

ALLOWABLE TRENCH WIDTHS

PIPE SIZE (NOM)	A SIDE CLEARANCE INCH		B DITCH WIDTH INCH				C SHORING WIDTH (ADDITIONAL-INCH)	D CUT REPAIR WIDTH FEET			
	SOIL	ROCK	SOIL		ROCK			SOIL		ROCK	
			MJ	SJ	MJ	SJ		MJ	SJ	MJ	SJ
3/4"-2"	2	6	NA	8	NA	14	AS APPROVED	NA	3.00	NA	3.17
4"	9	12	25	23	27	23	AS APPROVED	4.08	3.92	4.25	4.06
6"	9	12	28	28	30	30	AS APPROVED	4.33	4.33	4.50	4.50
8"	9	12	32	30	34	32	AS APPROVED	4.67	4.50	4.63	4.67
10"	9	12	34	32	36	34	AS APPROVED	4.83	4.67	5.00	4.83
12"	9	12	36	34	38	36	AS APPROVED	5.00	4.83	5.17	5.00
14"	9	14	39	36	41	38	AS APPROVED	5.23	5.00	5.42	5.17
16"	9	14	42	38	44	40	AS APPROVED	5.50	5.17	5.57	5.33
20"	9	14	45	44	47	46	AS APPROVED	5.75	5.67	5.92	5.63
24"	9	14	50	48	52	50	AS APPROVED	6.17	6.00	6.33	6.17
30"	9	18	58	54	60	56	AS APPROVED	6.83	6.50	7.00	6.67
36"	9	18	64	61	66	63	AS APPROVED	7.33	7.08	7.50	7.25
42"	9	18	72	64	74	66	AS APPROVED	8.00	7.33	8.17	7.50
48"	9	18	78	73	80	76	AS APPROVED	8.50	8.08	9.34	8.25

FULTON COUNTY STANDARD DETAIL 103
ALLOWABLE TRENCH WIDTHS

DATE	REVISIONS	DATE	REVISIONS

DGS/DRN/CHKD: CMS
APPROVED: REW
DATE: 12-2-05

FULTON COUNTY

FULTON COUNTY PUBLIC WORKS
141 PRYOR ST. ATLANTA, GA. 30303
404-730-7400 FAX: 404-224-0498

DRAWING NO. 103

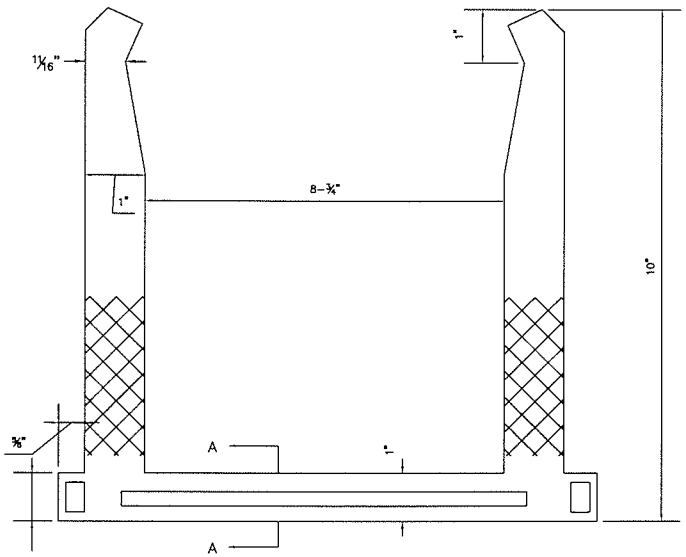

PLAN VIEW
N.T.S.

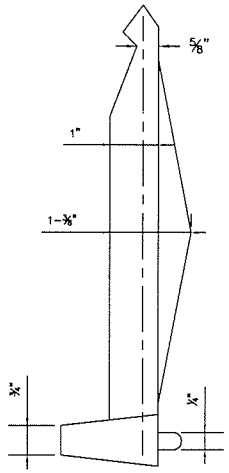

SIDE VIEW
N.T.S.

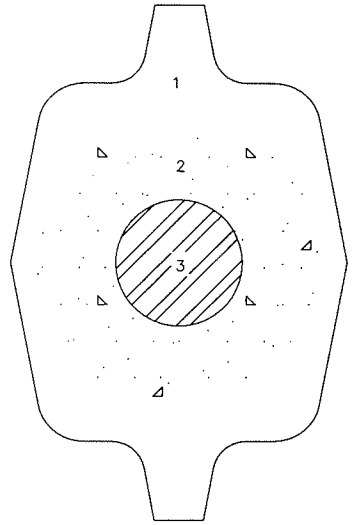

SECTION A-A
N.T.S.

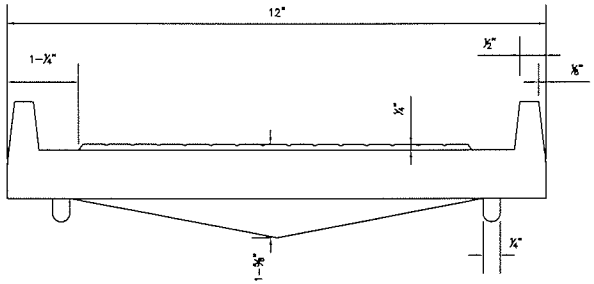

FRONT VIEW
N.T.S.

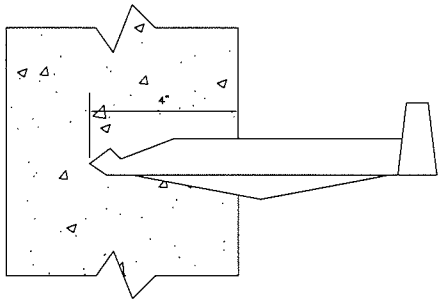

MATERIAL
1. POLYPROPYLENE PLASTIC SOLID OUTTER SHELL
2. POLYPROPYLENE PLASTIC POROUS MASS
3. 3/8" STEEL REINFORCING ROD, GRADE 60 MEETING ASTM A-615

FULTON COUNTY STANDARD DETAIL 104
REINFORCED PLASTIC STEP

DATE	REVISIONS	DATE	REVISIONS

DGS/DRN/CHKD: CMS
APPROVED: REW
DATE: 12-2-05

FULTON COUNTY

FULTON COUNTY PUBLIC WORKS
141 PRYOR ST. ATLANTA, GA. 30303
404-730-7400 FAX: 404-224-0498

DRAWING NO.
104

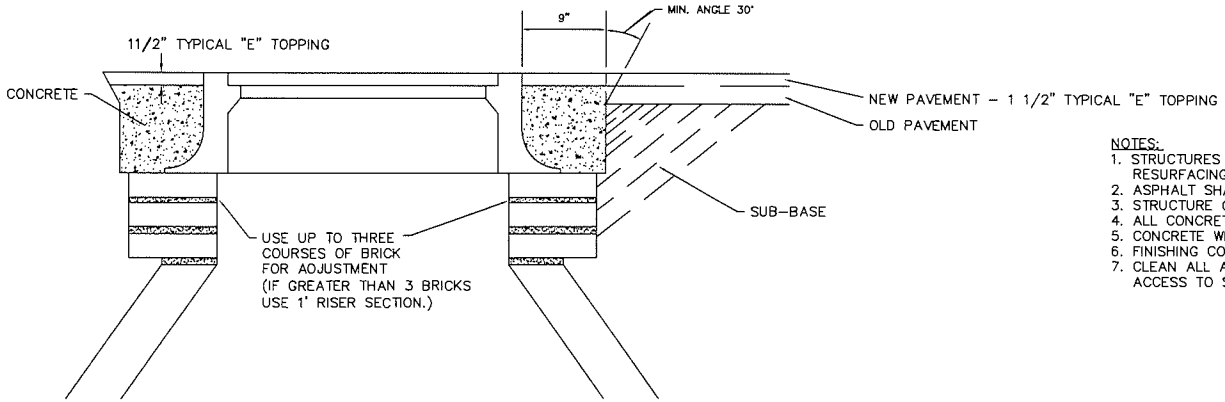

MANHOLE
N.T.S.

NOTES:
1. STRUCTURES SHALL NOT BE ADJUSTED FOR A PERIOD OF 24 HOURS AFTER RESURFACING IS COMPLETED IN THAT AREA.
2. ASPHALT SHALL BE SAWCUT TO MAKE A SMOOTH, EVEN EDGE.
3. STRUCTURE COVER SHALL BE ADJUSTED TO FIT FLUSH WITH STREET SURFACE.
4. ALL CONCRETE SHALL HAVE A COMPRESSIVE STRENGTH OF 4000 PSI.
5. CONCRETE WILL BE USED TO BACKFILL THE ENTIRE WORKING AREA.
6. FINISHING CONCRETE SHALL BE DONE BY USE OF A TROWEL OR FLOAT.
7. CLEAN ALL ASPHALT OFF SEWER MANHOLES AT TIME OF PAVING TO ALLOW ACCESS TO SYSTEM AT ALL TIMES.

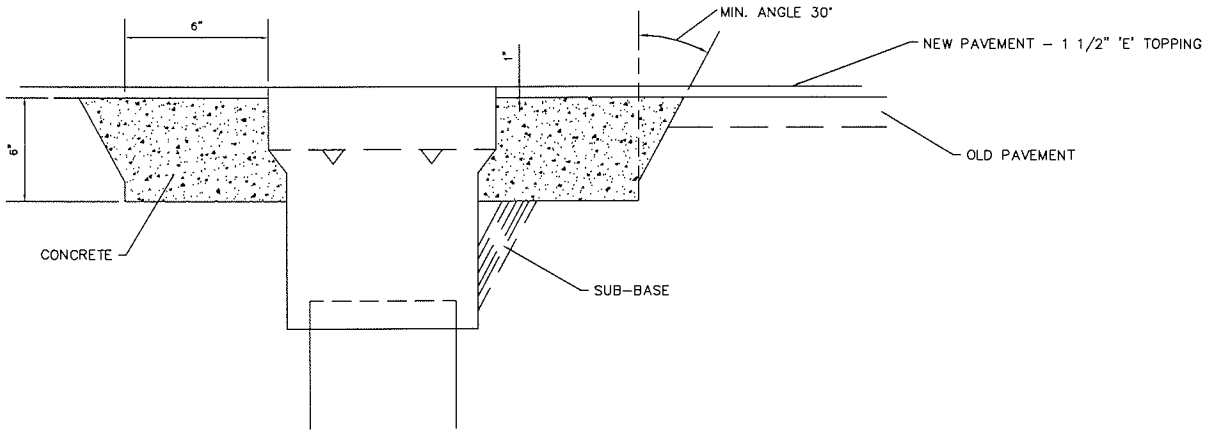

VALVE
N.T.S.

FULTON COUNTY STANDARD DETAIL 105 STRUCTURE ADJUSTMENT		DATE	REVISIONS	DATE	REVISIONS	DGS/DRN/CHKD: CMS APPROVED: REW DATE: 12–2–05	FULTON COUNTY	FULTON COUNTY PUBLIC WORKS 141 PRYOR ST. ATLANTA, GA. 30303 404–730–7400 FAX: 404–224–0498	DRAWING NO. 105

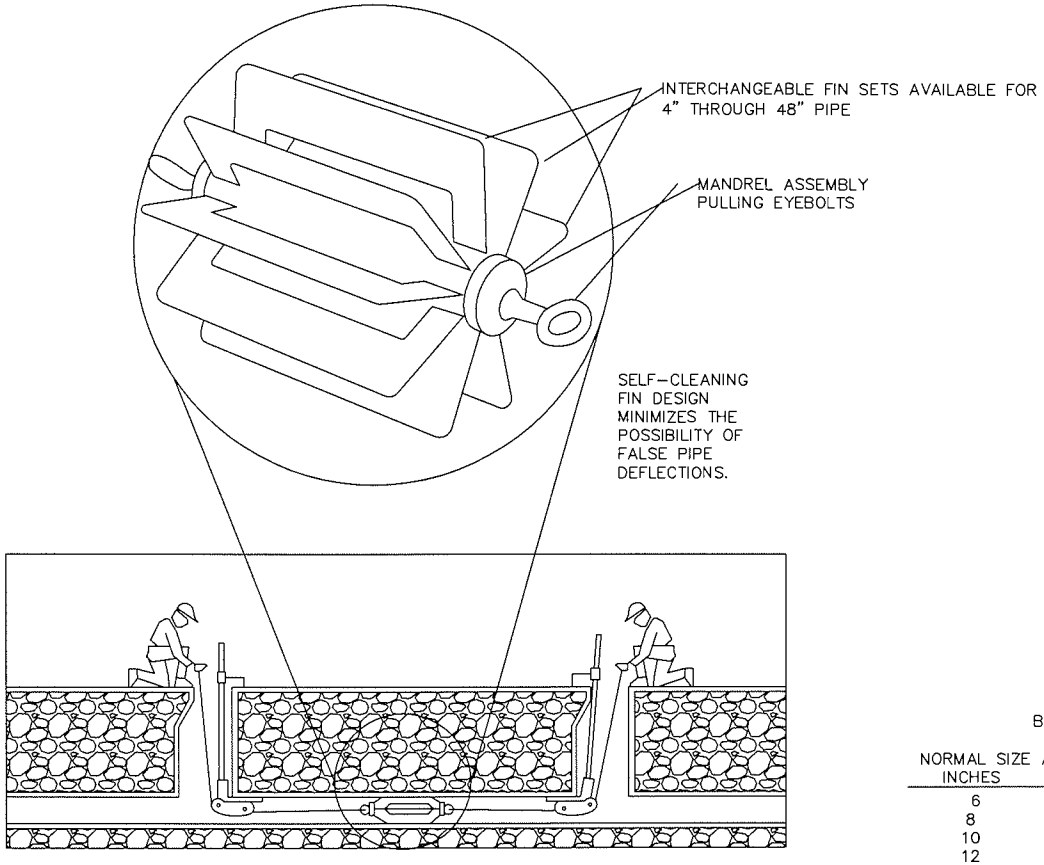

THE DEFLECTION TEST GAUGE CAN BE PULLED EASILY THROUGH THE PIPELINE.

NOTES:

1. AFTER INSTALLATION A DEFLECTION TEST IS REQUIRED NO SOONER THAN 24 HOURS OF TRENCH BACKFILLING. INITIAL DEFLECTION SHALL BE LIMITED TO 3% OF THE UNDEFLECTED DIAMETER.
2. PIPE SHALL BE ASTM D-3034, SDR 35 IN 12.5 FOOT LAYING LENGTHS WITH ELASTOMERIC SEALED JOINTS IN ACCORDANCE WITH ASTM D-3212.
3. MANDREL TO BE MADE FROM AIRCRAFT-QUALITY ALUMINUM OR APPROVED EQUAL.
4. EACH FIN SET IS TO BE STAMPED WITH THE PIPE DIAMETER AND PERCENT DEFLECTION.
5. MANDREL LENGTH TO BE 10 INCHES, ,MANDREL WEIGHT TO BE 4 LBS.
6. MANDREL TO BE PROVIDED BY CONTRACTOR IT MUST BE MEASURED AND APPROVED FIRST BY FULTON COUNTY INSPECTOR.
7. A SECOND DEFLECTION TEST MAY BE REQUIRED AT THE END OF THE MAINTENANCE PERIOD. THE FULTON COUNTY INSPECTOR MAY REQUIRE A 5% DEFLECTION TEST AT THIS TIME PRIOR TO THE RELEASE OF THE MAINTENANCE BONDS AND THE FINAL ACCEPTANCE OF THE IMPROVEMENTS INTO COUNTY MAINTENANCE.

BASE INSIDE DIAMETER AND 3%, 5%, 7.5% MANDREL DIMENSIONS

NORMAL SIZE INCHES	AVERAGE SIZE DIAMETER	BASE INSIDE DIAMETER	3% DEFLECTION	5% DEFLECTION	7.5% DEFLECTION
6	5.893	5.742	5.569	5.454	5.31
8	7.891	7.665	7.435	7.281	7.09
10	9.864	9.563	9.276	9.084	8.84
12	11.737	11.361	11.020	10.792	10.51
15	14.374	13.898	13.481	13.203	12.86

FULTON COUNTY STANDARD DETAIL 106
MANDREL DETAIL FOR
PVC PIPE INSTALLATION

DATE	REVISIONS	DATE	REVISIONS

DGS/DRN/CHKD: CMS
APPROVED: REW
DATE: 12-2-05

FULTON COUNTY

FULTON COUNTY PUBLIC WORKS
141 PRYOR ST. ATLANTA, GA. 30303
404-730-7400 FAX: 404-224-0498

DRAWING NO.
106

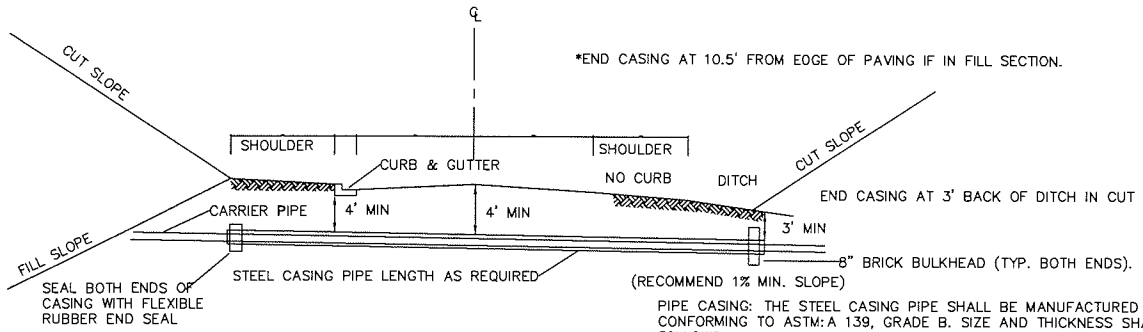

SECTION
N.T.S.

BORING NOTES:

CASING TO BE STEEL PIPE (ROUND) WITH 45° BEVELED EDGES.
ALL CUTS TO BE SQUARED TO END.
JOIN ALL PIPE WITH DOUBLE BEAD BUTT WELDS.
AUGER HEAD DIAMETER CANNOT EXCEED DIAMETER OF CASING BY MORE THAN 2".
BORING AND CASING SHALL BE INSTALLEO SIMULTANEOUSLY.
ANYTHING 6" OR LARGER REQUIRES BORE AND CASE.
CASING PIPE SHALL HAVE A PROTECTIVE COATING CONSISTING OF A COAL-TAR PRIMER COAT AND AN APPLICATION OF HOT COAL-TAR ENAMEL $\frac{3}{32}$" ($\pm\frac{1}{32}$") THICK PLUS A BONDED 15 LB. ASBESTOS WRAP.
PIT TO BE NO CLOSER THAN 4' BEHIND CURB OR EDGE OF PAVEMENT.
TYPICAL PIT IS 32' LONG BY 10' WIDE.
CASING SHALL BE MANUFACTURED FROM STEEL CONFORMING TO ASTM: A 139, GRADE B.
2 STAINLESS STEEL CASING SPACERS REQUIRED PER JOINT.
ALL BORING MUST BE APPROVED AND A PERMIT OBTAINED FROM PUBLIC WORKS (404) 730-7400.
CARRIER PIPE SHALL BE DUCTILE IRON.

PIPE CASING: THE STEEL CASING PIPE SHALL BE MANUFACTURED FROM STEEL CONFORMING TO ASTM: A 139, GRADE B. SIZE AND THICKNESS SHALL BE AS FOLLOWS:

UNDER RAILROADS

PIPE DIAMETER INCHES (I.D)	CASING DIAMETER INCHES (I.D.) MIN.	WALL THICKNESS INCHES
6	14	0.250
8	18	0.375
10	20	0.375
12	22	0.375
14	24	0.375
16	30	0.406
18	30	0.406
20	32	0.469
24	36	0.469
30	42	0.500

RR SECTION

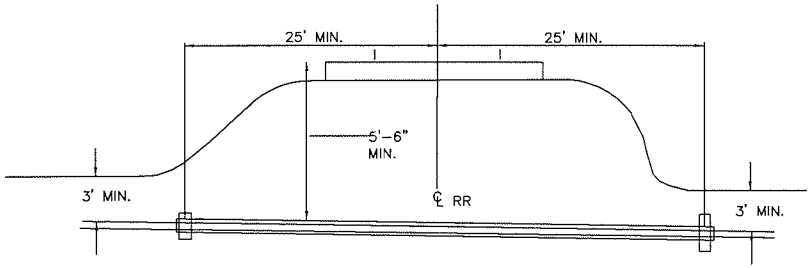

UNDER HIGHWAYS

PIPE DIAMETER INCHES (I.D)	CASING DIAMETER INCHES (I.D.) MIN.	WALL THICKNESS INCHES
6	12	0.250
8	16	0.250
10	18	0.250
12	20	0.375
16	24	0.375
18	30	0.375
20	30	0.375
24	36	0.375
30	42	0.375

FULTON COUNTY STANDARD DETAIL 107
ROADWAY CROSSING
BORE AND CASE DETAIL

DATE	REVISIONS	DATE	REVISIONS

DGS/DRN/CHKD: CMS
APPROVED: REW
DATE: 12-2-05

FULTON COUNTY

FULTON COUNTY PUBLIC WORKS
141 PRYOR ST. ATLANTA, GA. 30303
404-730-7400 FAX: 404-224-0498

DRAWING NO.
107

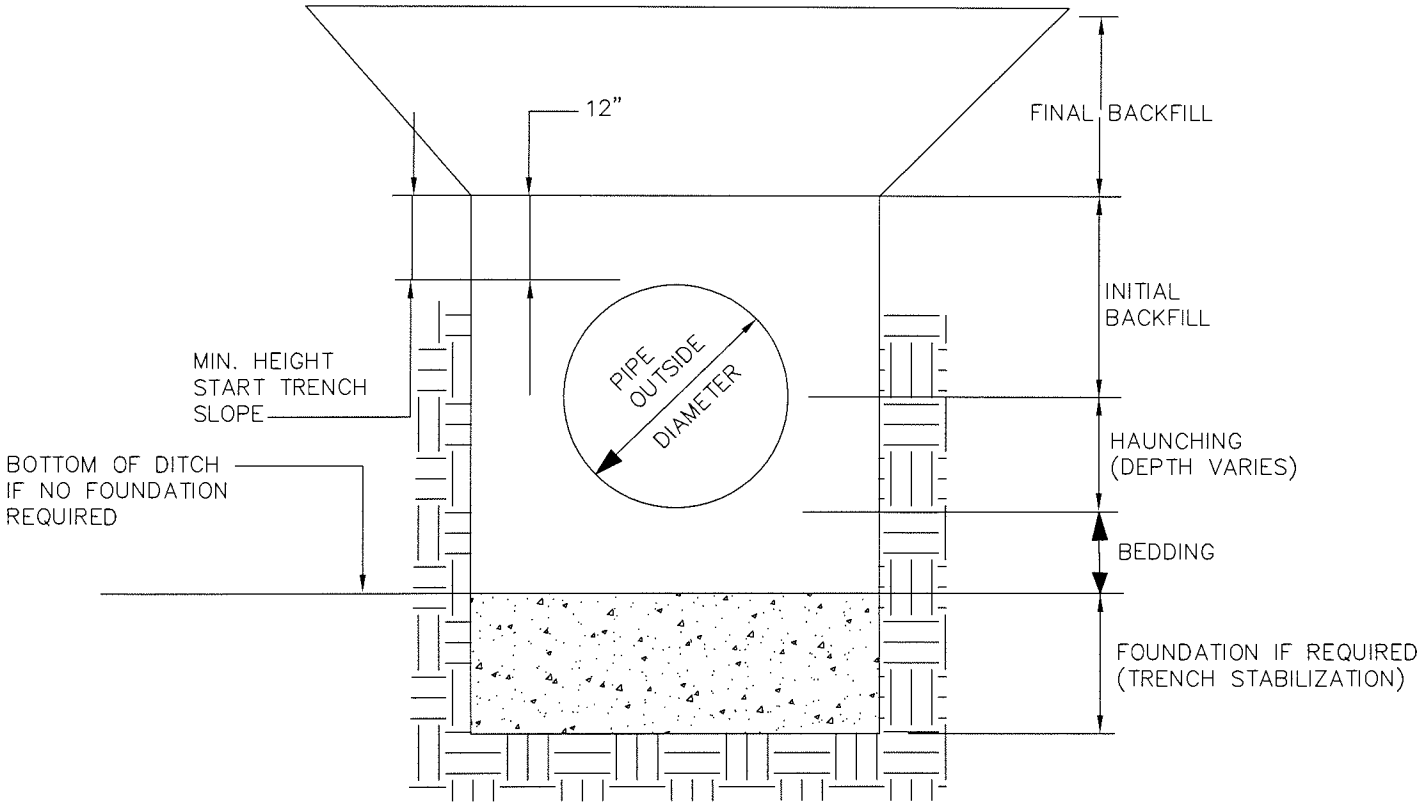

NOTE: SEE DETAIL # 103 AND #109 FOR DIMENSIONS AND MATERIALS

FULTON COUNTY STANDARD DETAIL 108 TRENCH TERMINOLOGY		DATE	REVISIONS	DATE	REVISIONS	DGS/DRN/CHKD: JM APPROVED: REW DATE: 12-2-05	FULTON COUNTY	FULTON COUNTY PUBLIC WORKS 141 PRYOR ST. ATLANTA, GA. 30303 404-730-7400 FAX: 404-224-0498	DRAWING NO. 108

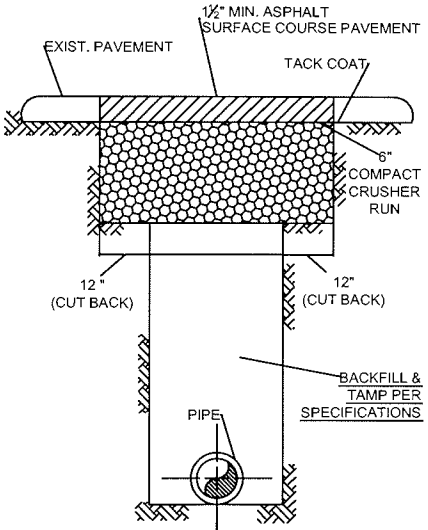

TYPE "A" CUT REPAIR DETAIL
T & G OR ASPHALT RDS. (DRIVEWAYS, A-30)

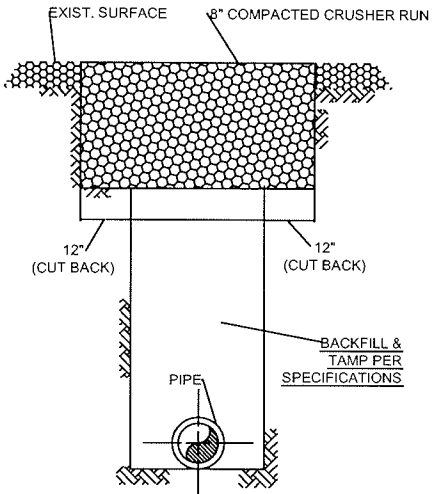

TYPE "B" CUT REPAIR DETAIL
DIRT OR GRAVEL RDS. (DRIVEWAYS, A-30)

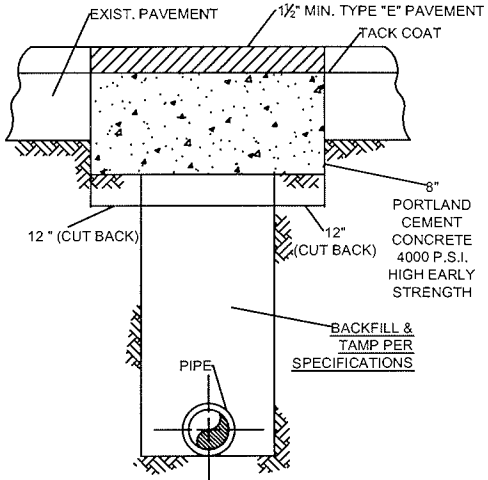

TYPE "C" CUT REPAIR DETAIL
GEORGIA D.O.T. AND FULTON CO.

NOTES:

1. ALL MATERIALS AND METHODS OF INSTALLATION SHALL COMPLY WITH THE GA. D.O.T.'s "STANDARD SPECIFICATIONS FOR ROAD AND BRIDGE CONSTRUCTION", 1983 EDITION OR LATEST REVISION THERETO.
2. FOR TYPE "C", THE CONTRACTOR SHALL COVER THE POURED CONCRETE WITH STEEL PLATES A MINIMUM OF 24 HOURS TO ALLOW ADEQUATE SET-UP.
3. CONTRACTOR'S TRAFFIC CONTROL PLAN MUST BE APPROVED BY THE AUTHORITY HAVING JURISDICTION BEFORE WORK BEGINS.
4. FINAL APPROVAL OF CONTRACTOR'S PAVEMENT CUT REPAIRS RESIDES WITH THE AUTHORITY HAVING JURISDICTION. CONTRACTOR SHALL MEET ALL REQUIREMENTS OF SAID AUTHORITY.

FULTON COUNTY STANDARD DETAIL 109
PAVEMENT CUT REPAIRS
TYPE A, B & C

DATE	REVISIONS	DATE	REVISIONS

DGS/DRN/CHKD: CMS
APPROVED: REW
DATE: 12-2-05

FULTON COUNTY

FULTON COUNTY PUBLIC WORKS
141 PRYOR ST. ATLANTA, GA. 30303
404-730-7400 FAX: 404-224-0498

DRAWING NO.
109

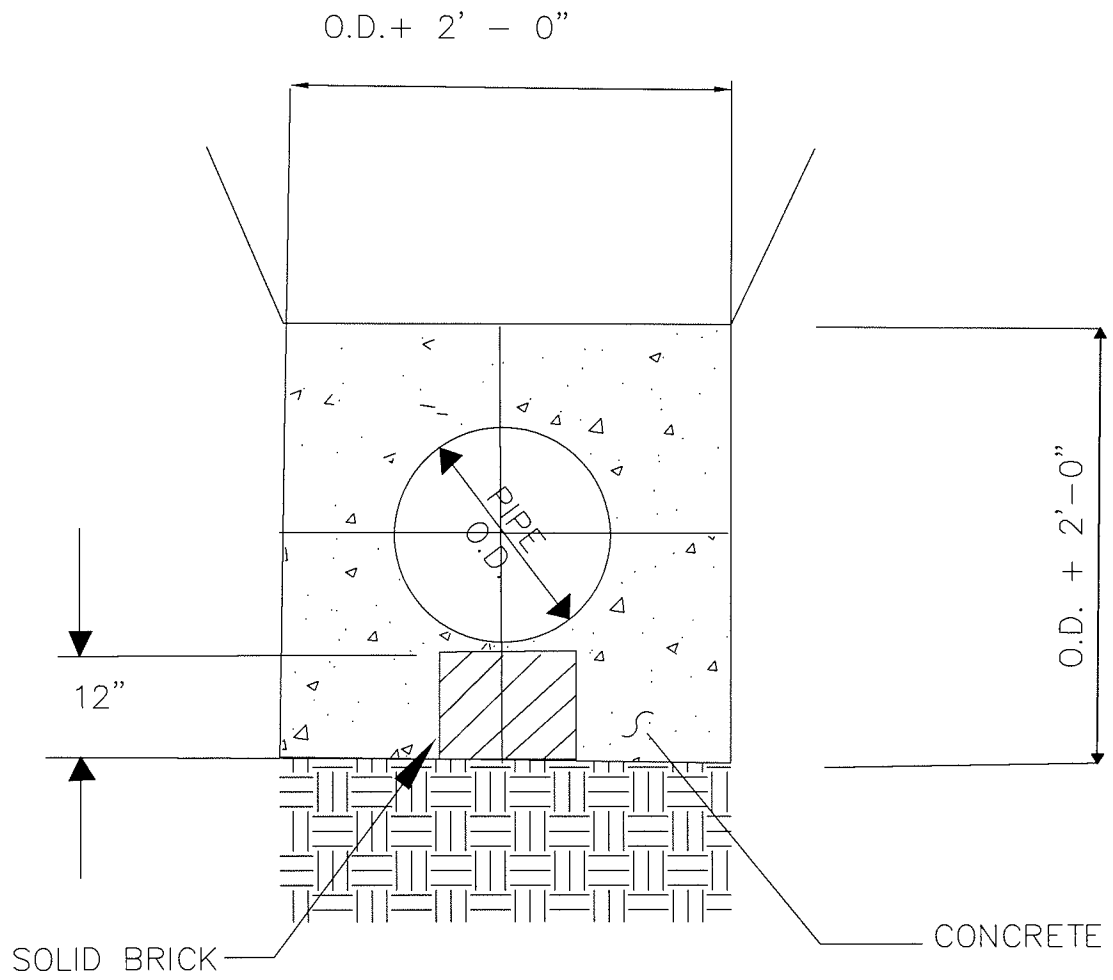

FULTON COUNTY STANDARD DETAIL 110
CONCRETE ENCASEMENT

DATE	REVISIONS	DATE	REVISIONS

DGS/DRN/CHKD: JM
APPROVED: REW
DATE: 12–2–05

FULTON COUNTY

FULTON COUNTY PUBLIC WORKS
141 PRYOR ST. ATLANTA, GA. 30303
404–730–7400 FAX: 404–224–0498

DRAWING NO. 110

NOTE REQUIRED:
CONCRETE STRENGTH TEST MAY BE REQUIRED FOR ALL POURED IN PLACE CONCRETE.

WATERTIGHT C.I. MANHOLE FRAME AND COVER

CORRUGATION AND 2 PICK HOLE IN COVER, NO PERFORATIONS.
N.T.S.

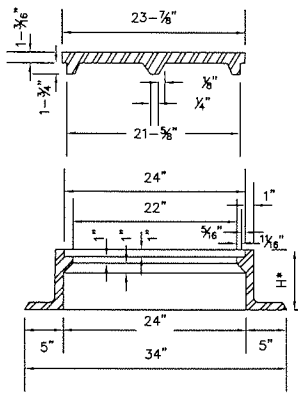

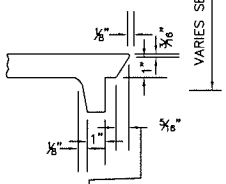

COLLAR REQ. TO SEAL OPENING AROUND PIPE TYP

FRAME – 282 LB. (8")
COVER – 178 LB.
TOTAL 460 LB.

SEATING SURFACE OF FRAME AND COVER TO BE MACHINED TO FIT.

460# M.H. FRAME AND COVER

FOR USE IN STREETS AND ROADS
N.T.S.

NOTE:
BRICK MANHOLES SHOULD ONLY BE USED IN SPECIAL CIRCUMSTANCES WHERE THE USE OF PRECAST SECTORS MAY BE AFFECTED BY OBSTACLES.

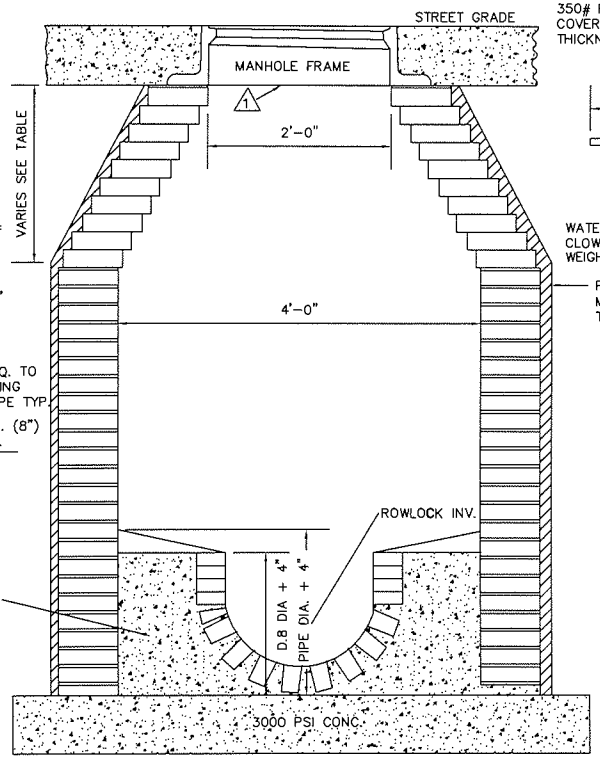

6" SLAB FOR 4'-0" DIA. 8" SLAB FOR 5'-0" AND 6'-0" DIA.

1 SEAL M.H. RING TO STRUCTURE WITH TWO CONCENTRIC RINGS OF ASPHALTIC MASTIC.

ELEVATION AT ℄ MANHOLE

NOTE:
ALL M.H. COVERS ON OUTFALL MH'S OUTSIDE OF ROADWAY R/W TO BE CAST IN PLACE IN CONE SECTIONS OF MHS.
350# FRAMES & COVERS MAY BE USED OUTSIDE OF STREETS AND ROADS.
COVER TO BE SIMILAR TO 460# FRAME TO BE REDUCED IN HEIGHT AND THICKNESS. MANHOLES OUTSIDE R/W SHALL BE 24" ABOVE GRADE.

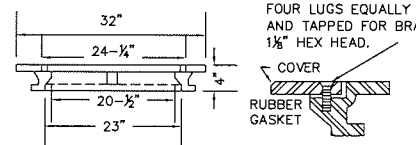

FOUR LUGS EQUALLY SPACED, DRILLED AND TAPPED FOR BRASS 3/4"THREAD BOLTS 1 1/8" HEX HEAD.

COVER

RUBBER GASKET

WATERTIGHT MANHOLE FRAME & COVER TO BE CLOW F-3370 OR EQUAL MIN. TOTAL WEIGHT 270 LBS.

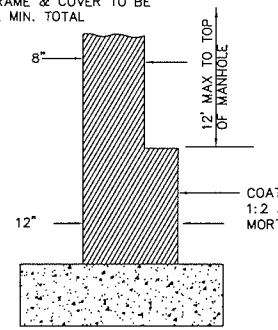

WALL DETAIL FOR DEPTH OVER 12'-20'

NOTE:
FOR DEPTH OVER 20' INCREASE WALL THICKNESS TO 16"

FULTON COUNTY STANDARD DETAIL 111 BRICK MANHOLE DETAIL AND MANHOLE FRAME AND COVER		DATE	REVISIONS	DATE	REVISIONS	DGS/DRN/CHKD: REB APPROVED: REW DATE: 12-2-05	FULTON COUNTY FULTON COUNTY PUBLIC WORKS 141 PRYOR ST. ATLANTA, GA. 30303 404-730-7400 FAX: 404-224-0498	DRAWING NO. 111

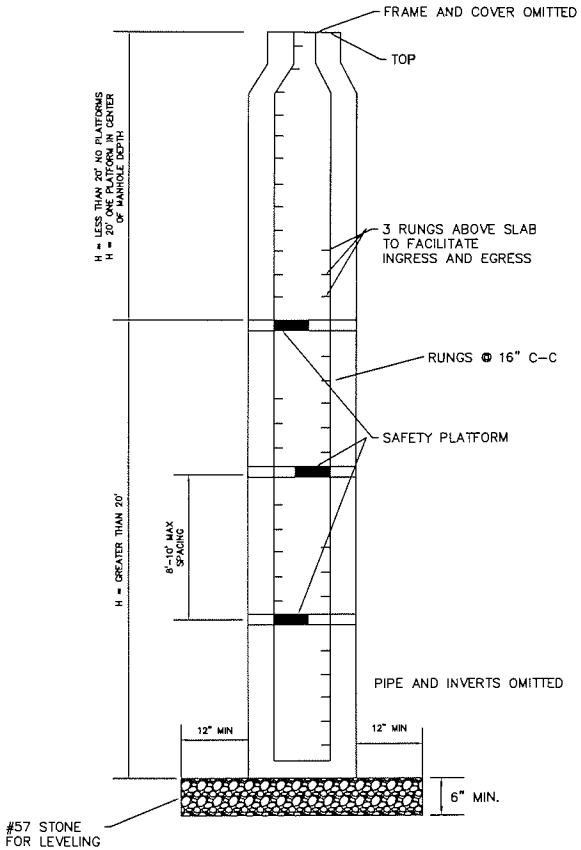

MH CROSS SECTION
N.T.S.

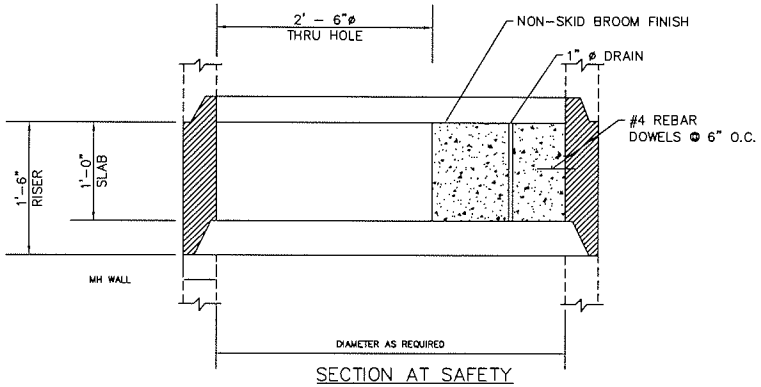

SECTION AT SAFETY PLATFORM
N.T.S.

NOTES:

1. A DEEP MANHOLE IS CONSIDERED TO BE GREATER THAN 24'.
2. SAFETY PLATFORMS ARE REQUIRED ON ALL MANHOLES EQUAL TO OR GREATER THAN 20' IN DEPTH.
3. SAFETY PLATFORMS ARE TO BE PLACED A MAX. DISTANCE OF 8'-10' APART.
4. PLATFORMS ARE TO BE DESIGNED TO OBTAIN A STRENGTH OF 4000 PSI IN 28 DAYS. MANHOLE AND PLATEFORM DESIGN SHALL CONFORM TO A.S.T.M. SPECS. C478 LATEST EDITION.
5. REINFORCING STEEL HAS A MIN. YIELD STRENGTH OF 60,000 PSI.
6. SAFETY PLATFORM SLAB IS DESIGNED FOR A CONCENTRATED LOAD (P) AS FOLLOWS:

MH DIAMETER (FT.)	P(LB.)
4	12,000
5	10,000
6	8,000

7. SAFETY PLATFORM IS TO BE PLACED BETWEEN RISERS.
8. SAFETY PLATFORM IS TO BE PLACED AT MIDPOINT OF A MANHOLE OVER 20' IN DEPTH. TWO PLATFORMS TO BE PLACED EQUAL DISTANCE AT A MANHOLE DEPTH OF 24'.
9. SAFETY PLATFORM IS TO BE PRECAST CONCRETE OR APPROVED EQUAL.
10. ALTERNATE OPENINGS IN SAFETY PLATFORMS AS INDIVIDUAL DESCENDS.
11. MANHOLES IN EXCESS OF 24' IN DEPTH SHALL BE PRE-APPROVED BY PUBLIC WORKS AND HAVE SAFETY PLATFORMS WITH 8'-10' SPACING.

FULTON COUNTY STANDARD DETAIL 112
SAFETY PLATFORM FOR DEEP
PRECAST MANHOLES

DATE	REVISIONS	DATE	REVISIONS

DGS/DRN/CHKD: REB
APPROVED: REW
DATE: 12-2-05

FULTON COUNTY

FULTON COUNTY PUBLIC WORKS
141 PRYOR ST. ATLANTA, GA. 30303
404-730-7400 FAX: 404-224-0498

DRAWING NO. 112

NOTES:
1. ALL HOLES MUST BE PRECAST.
2. MAXIMUM HOLE SIZE = PIPE O.D. + 4"
3. USE CONCENTRIC CONIC SECTIONS IN RIGHT-OF-WAY.
4. OUTFALL MANHOLES MUST HAVE CAST IN PLACE RINGS.
5. SEE STANDARD NO. 112 FOR MANHOLE DEPTH GREATER THAN 20'.

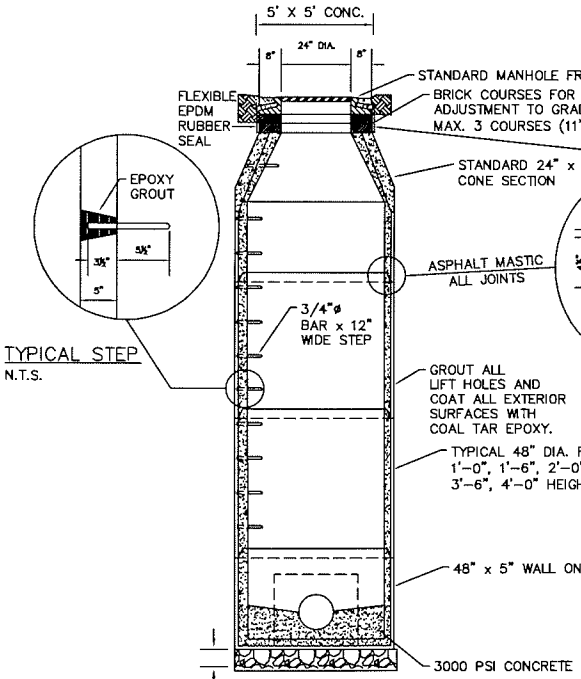

TYPICAL INSTALLATION
N.T.S.

TYPICAL STEP
N.T.S.

NOTE:
FOR DETAILS OF FRAME & COVER SEE STD. # 650.

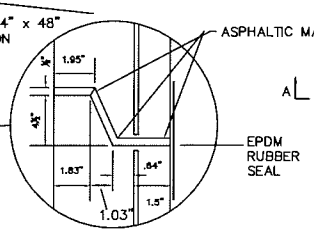

TYPICAL JOINT
N.T.S.

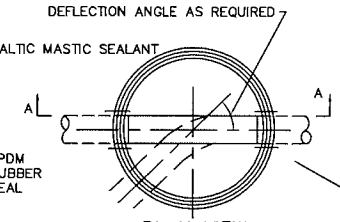

PLAN VIEW
ONE PIECE BASE UNIT
N.T.S.

MANHOLE MUST BE CORED
RUBBER BOOT IS REQUIRED

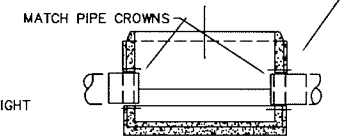

SECTION "A-A"
THRU ONE PIECE BASE UNIT
N.T.S.

NOTE:
ON ALL SECTIONS BELOW THE WATER TABLE 8" EXTERNAL SEAL WRAP WILL BE REQUIRED.

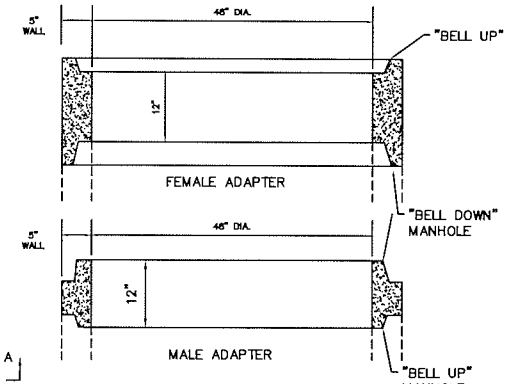

JOIN ADAPTERS (SECTION VIEW)
N.T.S.

FULTON COUNTY STANDARD DETAIL 113 MANHOLES PRECAST DETAILS		DATE	REVISIONS	DATE	REVISIONS	DGS/DRN/CHKD: REB APPROVED: REW DATE: 12-2-05	FULTON COUNTY	FULTON COUNTY PUBLIC WORKS 141 PRYOR ST. ATLANTA, GA. 30303 404-730-7400 FAX: 404-224-0498	DRAWING NO. 113

NOTE:
SEWER STAFF IS OF THE VIEW THAT ECCENTRIC MANHOLES SHOULD NOT BE USED. DIFFICULTY WITH ACCESS.

NOTE:
FOR OUTFALL LINES, MANHOLE TOP TO BE 18" TO 24" ABOVE SURROUNDING GROUND SURFACE.

ALL MANHOLES WITHIN TEN FEET OF PUBLIC RIGHT OF WAY SHALL BE TOPPED WITH A HEAVY DUTY TRAFFIC BEARING RING & COVER MOUNTED FLUSH TO EXISTING GRADE. LOADING SPECS. MAY BE REQUIRED FROM THE MANUFACTURER (RING & COVER).**

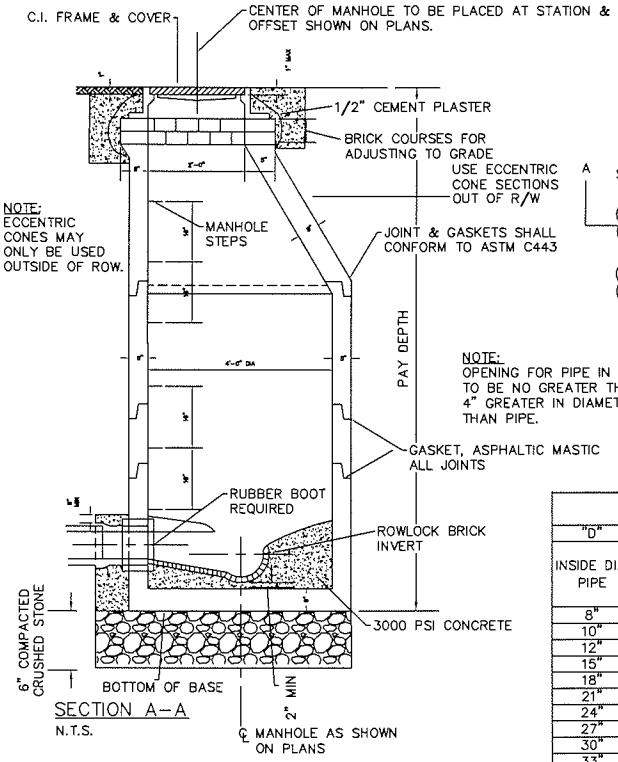

SECTION A–A
N.T.S.

NOTE:
OPENING FOR PIPE IN M.H. TO BE NO GREATER THAN 4" GREATER IN DIAMETER THAN PIPE.

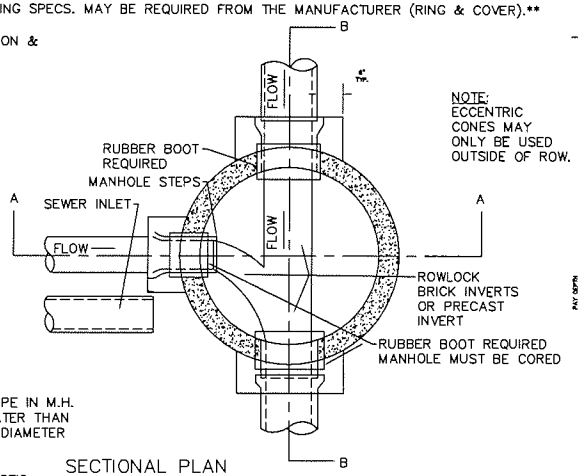

NOTE:
ECCENTRIC CONES MAY ONLY BE USED OUTSIDE OF ROW.

SECTIONAL PLAN
STANDARD PRECAST 4'–0" DIAMETER MANHOLE
N.T.S.

TABLE I		
"D"	"T"	"H"
INSIDE DIA. PIPE	VERTICAL TANGENT	HEIGHT OF WATER TABLE
8"	2 /1/2"	6 1/2"
10"	3"	8"
12"	3 1/2"	9 1/2"
15"	4 1/2"	12"
18"	5 1/2"	14 1/2"
21"	6 1/2"	17"
24"	7 1/2"	19 1/2"
27"	8"	21 1/2"
30"	9"	24"
33"	10"	26 1/2"
36"	11"	29"

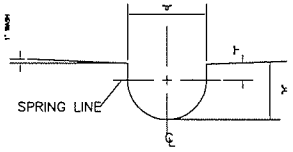

DETAIL "H"
NOTE: "H" & "T" DIMENSIONS APPLY ONLY AT THE UPSTREAM, INSIDE EDGE OF M.H.
N.T.S.

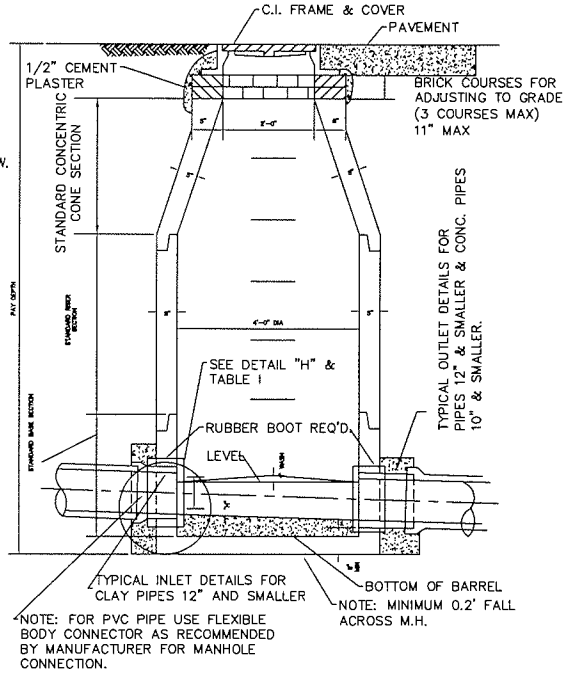

SECTION B–B
N.T.S.

FULTON COUNTY STANDARD DETAIL 114
STANDARD SEWER MANHOLES
PRECAST CONCRETE

DATE	REVISIONS	DATE	REVISIONS

DGS/DRN/CHKD: REB
APPROVED: REW
DATE: 12–2–05

FULTON COUNTY

FULTON COUNTY PUBLIC WORKS
141 PRYOR ST. ATLANTA, GA. 30303
404–730–7400 FAX: 404–224–0498

DRAWING NO.
114

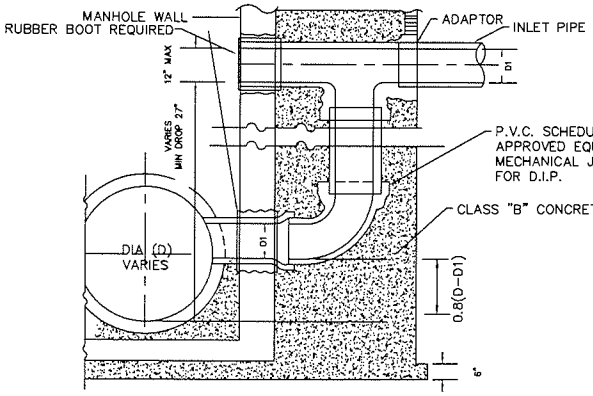

SECTION E-E
N.T.S.

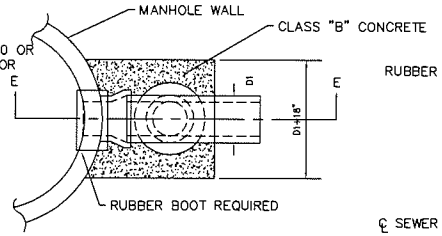

PART PLAN

TYPICAL VERTICAL DROP INLET AT MANHOLE
(OUTSIDE DROP)

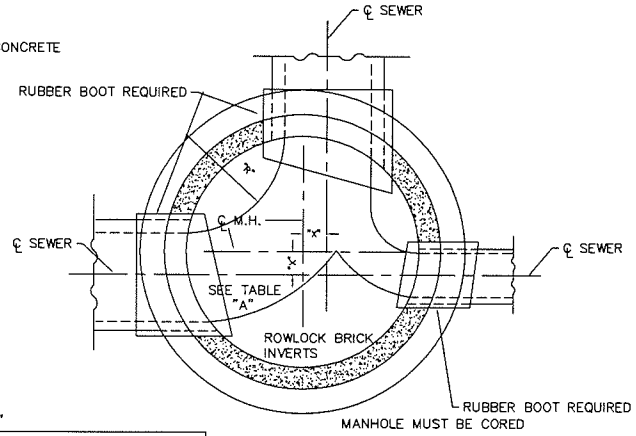

SECTIONAL PLAN
N.T.S.

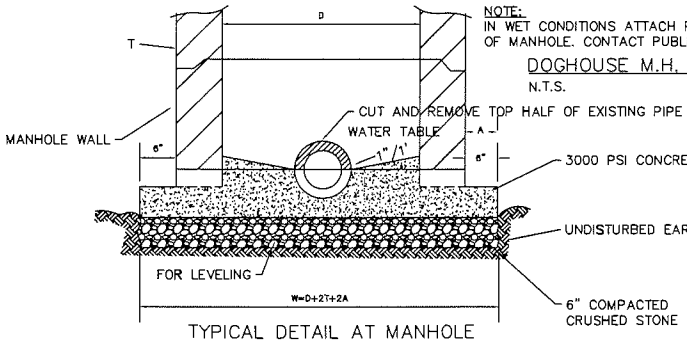

TYPICAL DETAIL AT MANHOLE
CONSTRUCTED OVER EXISTING PIPE
N.T.S.

NOTE:
IN WET CONDITIONS ATTACH PIPE INSIDE OF MANHOLE. CONTACT PUBLIC WORKS.

DOGHOUSE M.H. DETAIL
N.T.S.

TABLE "A"

STANDARD PRECAST MANHOLES				
SCHEDULE OF GOVERNING DIMENSIONS				
PIPE SIZE	ANGLE	M.H. DIAMETER	"R"	"X"
8" thru 12"	0° to 90°	4	1'-0"	0"
15"	0° to 60°	4'	1'-3"	0"
15"	60° to 90°	4'	1'-3"	6"
18"	0° to 60°	4'	1'-6"	0"
18"	60° to 90°	4'	1'-4"	8"
21"	0° to 60°	4'	1'-9	0"
21"	60° to 90°	5'	1'-9"	9"
24"	0° to 60°	4'	2'-0"	0"
24"	60° to 90°	5'	1'-6"	9"
27"	0° to 60°	5'	2'-3"	0"
27"	60° to 90°	6'	2'-0"	1'-0"
30"	0° to 60°	5'	2'-6"	0"
30"	60° to 90°	6'	1'-9"	8"
36"	0° to 90°	PRE-BED PIPE, M.H. BASE & ELBOW UNIT		

FULTON COUNTY STANDARD DETAIL 115
STANDARD SEWER MANHOLES
PRECAST CONCRETE

DATE	REVISIONS	DATE	REVISIONS

DGS/DRN/CHKD: REB
APPROVED: REW
DATE: 12-2-05

FULTON COUNTY

FULTON COUNTY PUBLIC WORKS
141 PRYOR ST. ATLANTA, GA. 30303
404-730-7400 FAX: 404-224-0498

DRAWING NO.
115

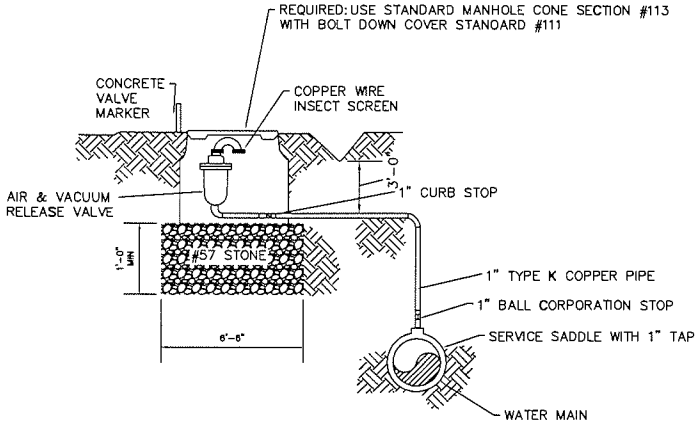

AIR & VACUUM RELEASE VALVE ASSEMBLY

N.T.S.

NOTES:

ALL FORCE MAINS SHALL BE " DIA. DIP, CLASS 50 PUSH-ON JOINTS EXCEPT AT CREEK CROSSINGS, BORINGS, AND FITTINGS. ALL CONSTRUCTION METHODS AND MATERIALS AND MAJOR GLANDS TO BE USED IN FULTON COUNTY MUST BE MADE OF DUCTILE IRON AND COMPLY TO THE ANSI/AWWA A21.111/C111-85 STANDARD SPECIFICATIONS. GLANDS THAT DO NOT MEET THE SPECIFICATIONS WILL NOT BE ACCEPTED.
THRUST BLOCKING WILL BE USED ON ALL TEES AND BENDS.
INSPECTOR MUST BE NOTIFIED 24 HOURS BEFORE CONSTRUCTION.

FOR COMMERCIAL USE ONLY

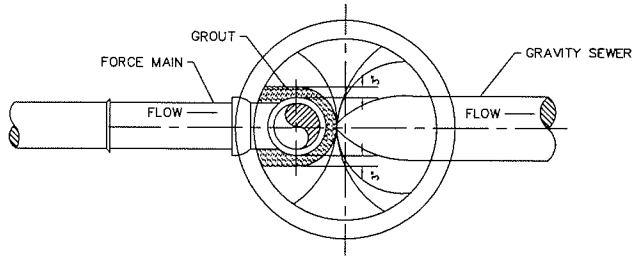

PLAN

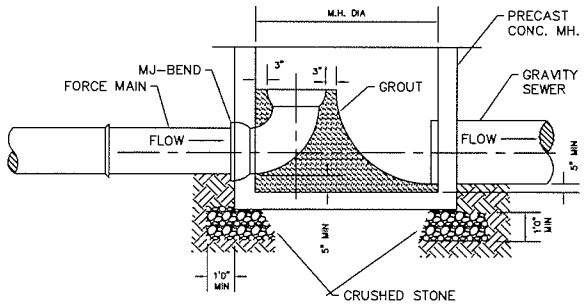

SECTION

(END OF LINE CONNECTION)

FORCE MAIN DISCHARGE MANHOLE DETAIL

N.T.S.

FULTON COUNTY STANDARD DETAIL 116 FORCE MAIN DETAILS AIR & VACUUM RELEASE VALVE ASSEMBLY		DATE	REVISIONS	DATE	REVISIONS	DGS/DRN/CHKD: REB APPROVED: REW DATE: 12-2-05	FULTON COUNTY	FULTON COUNTY PUBLIC WORKS 141 PRYOR ST. ATLANTA, GA. 30303 404-730-7400 FAX: 404-224-0498	DRAWING NO. 116

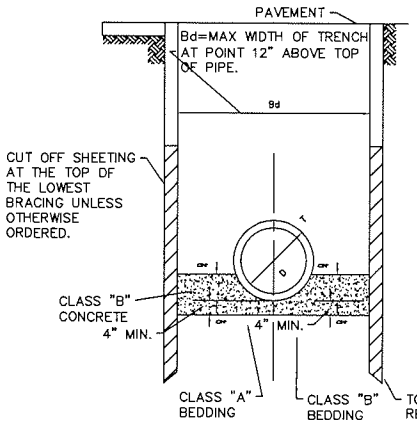

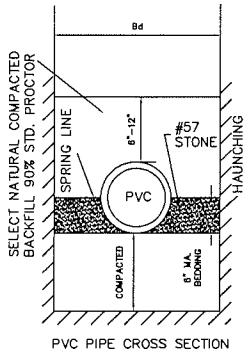

PVC PIPE CROSS SECTION

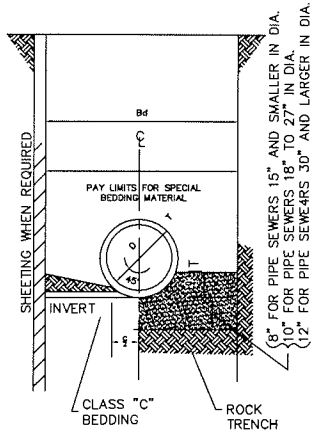

TYPICAL TRENCH DETAILS

N.T.S.

NOTE: ALL O.S.H.A. REGULATIONS MUST BE COMPLIED WITH.

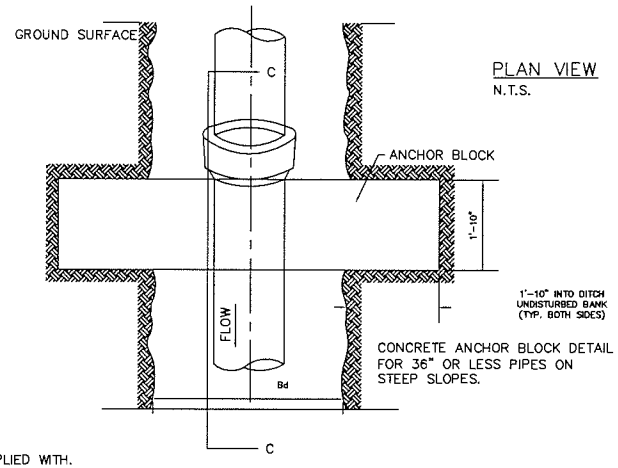

PLAN VIEW

N.T.S.

CONCRETE ANCHOR BLOCK DETAIL FOR 36" OR LESS PIPES ON STEEP SLOPES.

A.S.T.M. A746						A.S.T.M. C76–					A.S.T.M. C14–				A.S.T.M.–3034 SDR 35				
DUCTILE IRON PIPE						REINF. CONC. PIPE					EX. STR. CONC. SEWER PIPE				P.V.C. PIPE				
D. IN	T. IN	Bd FT		C FT	*CRADLE	T. IN	Bd FT		C FT	*CRADLE	T. IN	Bd FT	C FT	*CRADLE	T. IN	Bd FT			
6	0.38	2		0.41	0.034										0.18	2.52			
8	0.42	2.09		0.53	0.036						7 / 8	2.15	0.6	0.041	0.24	2.7			
10	0.48	2.26		0.65	0.043						1	2.33	0.7	0.047	0.3	2.88			
12	0.52	2.43		0.78	0.049						1–3/8	2.56	0.87	0.055	0.36	3.04			
15						2	2.67		0.95	0.06	1–5/8	2.85	1.08	0.066	0.437	3.28			
18	0.73	2.96		1.15	0.072	2–1/4	3		1.15	0.073	2	3.17	1.3	0.086					
21						2–1/2	3.25		1.35	0.088	2–1/4	3.46	1.5	0.105					
24	0.85	3.48		1.52	0.18	1–3/4	3.54		1.55	0.109	2–5/8	3.77	1.72	0.128					
27						3	3.83		1.75	0.131									
30	0.99	4		1.88	0.149	3	4.08		1.95	0.153									
33						3–1/2	4.42		2.2	0.184									
36	1.19	4.5		2.27	0.198	3–3/4	4.75		2.4	0.215									
42	1.32	5		2.63	0.253	4	5.67		2.6	0.288									
48	1.44	5.5		3	0.314	4–1/2	6.25		3	0.36									
54						5	6.83		3.5	0.44									
60						5–1/2	7.42		3.75	0.54									
66						5	8		4.25	0.63									
72						6–1/2	8.58		4.65	0.74									
						7	9.17		5.07	0.86									

NOTE: PAYMENT QUANITY IN CU. YDS./LIN/FT. OF TRENCH FOR CLASS "B" CONC. IN CASE OF CLASS "A" BEDDING & FOR CRUSHED STONE BEDDING MATERIAL IN CASE OF CLASS "B" BEDDING. ADJUST QUANTITY OF CRADLE MATERIAL BASED ON Bd WIDTH IF DEPTH OF CRADLE EXCEEDS D/4.

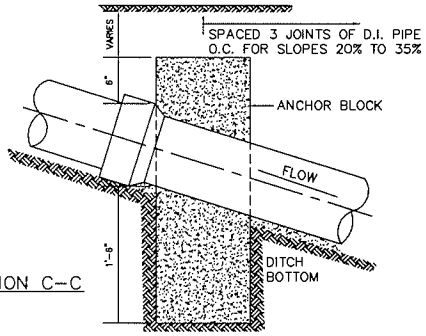

SECTION C–C

N.T.S.

PVC BEDDING DETAIL

COMPACTION–

THE BACKFILL OF ALL TRENCHES TO BE COMPACTED TO A DENSITY OF 90% STANDARD PROCTOR. BACKFILL MATERIAL SHALL BE FREE FROM ROOTS, STUMPS, OR OTHER FOREIGN DEBRIS AND SHALL BE PLACED AT OR NEAR OPTIMUM MOISTURE.

FULTON COUNTY STANDARD DETAIL 117
PIPE SEWER DATA
PVC PIPE INSTALLATION

DATE	REVISIONS	DATE	REVISIONS

DGS/DRN/CHKD: REB
APPROVED: REW
DATE: 12–2–05

FULTON COUNTY

FULTON COUNTY PUBLIC WORKS
141 PRYOR ST. ATLANTA, GA. 30303
404–730–7400 FAX: 404–224–0498

DRAWING NO. 117

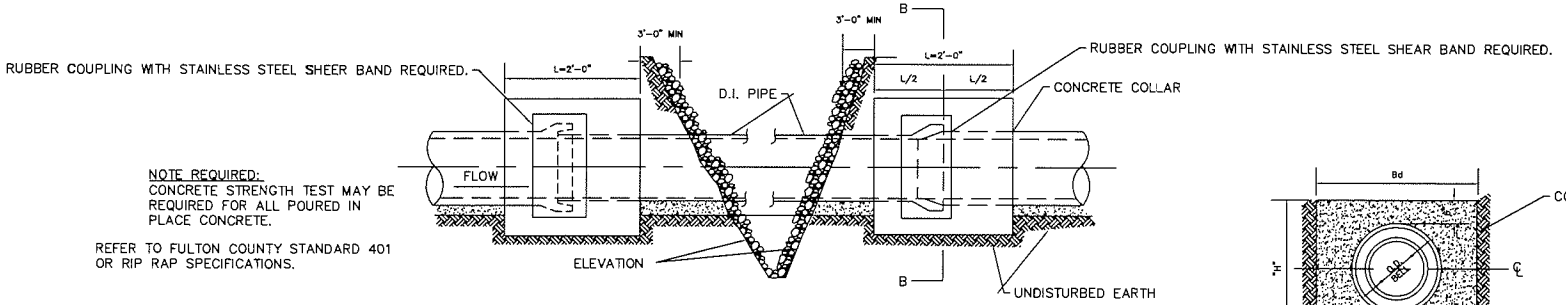

NOTE REQUIRED:
CONCRETE STRENGTH TEST MAY BE REQUIRED FOR ALL POURED IN PLACE CONCRETE.

REFER TO FULTON COUNTY STANDARD 401 OR RIP RAP SPECIFICATIONS.

TYPICAL DITCH CROSSING
N.T.S.

NOTES:
WHERE SEWER PIPES RUN PARALLEL WITH CREEKS OR STREAMS, RIP RAP IS REQUIRED WITHIN 10 FEET SEWER EASEMENT. ALL SEWER OUTFALLS MUST BE LEFT ACCESSABLE TO COUNTY SERVICE TRUCKS.

GATES (12 FEET) WILL BE REQUIRED ON FENCES ACROSS OUTFALLS HAVING A DIAMETER OF 12" OR LARGER.

STEEL PIPE COATED INSIDE AND COATED AND WRAPPEO OUTSIDE MAY BE USED.

NOTE:
THE UNION OF UNLIKE PIPE (D.I.P., CLAY, P.V.C. OR CONCRETE) SHALL BE JOINED TOGETHER WITH A CONCRETE COLLAR AS SHOWN ABOVE AND FLEXIBLE NEOPRENE COUPLING WITH STAINLESS STEEL BANDS AND SHEAR RING.

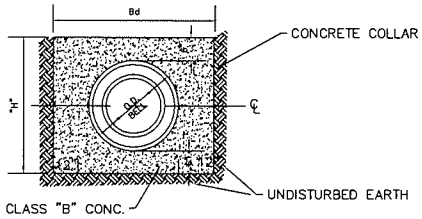

SECTION B–B
N.T.S.

PLAN VIEW
N.T.S.

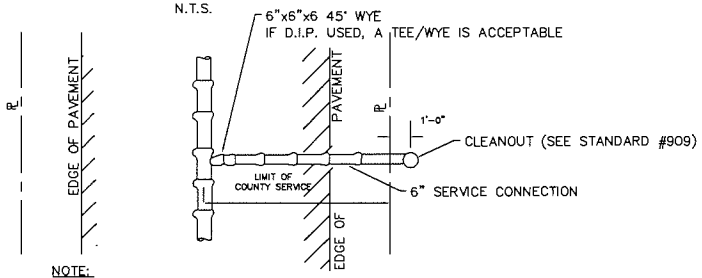

NOTE:
WHERE SERVICE LINE CROSSES STATE HWY. R/W, PIPE AND FITTINGS SHALL BE MECHANICAL JOINT D.I. PIPE, AS SPECIFIED UNDER ITEM NO. 7 D.I. PIPE AND TRENCH SHALL BE BACKFILLED WITH CRUSHED STONE.

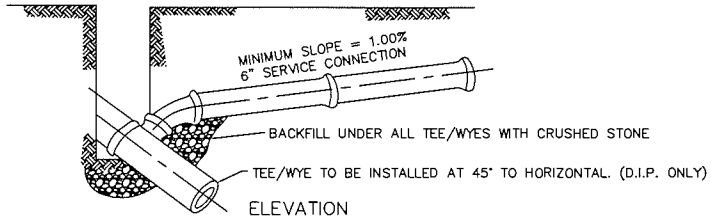

TYPICAL SERVICE CONNECTION
N.T.S.

FULTON COUNTY STANDARD DETAIL 118 PIPE SEWER DATA		DATE	REVISIONS	DATE	REVISIONS	DGS/DRN/CHKD: REB APPROVED: REW DATE: 12–2–05	FULTON COUNTY	FULTON COUNTY PUBLIC WORKS 141 PRYOR ST. ATLANTA, GA. 30303 404–730–7400 FAX: 404–224–0498	DRAWING NO. 118

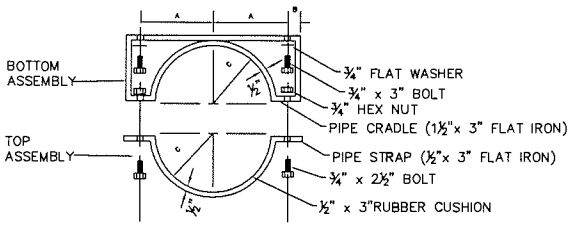

DIMENSION IN INCHES FOR PIPE HANGERS			
PIPE SIZE	A	B	C (RADIUS)
8	6.53	2.00	4.53
12	8.60	2.00	6.60
16	10.70	2.00	6.70

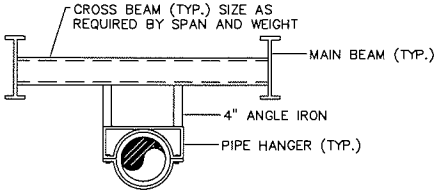

TYPICAL WATER MAIN SUPPORT DETAILS
N.T.S.

NOTES:
1. PRIMER SHALL BE NO. 1-8 ORANGE PRIMER AND COMFORM TO GEORGIA D.O.T. ARTICLE 670.02 PRIMER SHALL BE APPLIED TO A MINIMUM THICKNESS OF 4 MILS.
2. PAINT SHALL BE NO. 3-A GREEN, BRUSHING, ROLLER, AIRLESS TYPE AND CONFORM TO GEORGIA D.O.T. ARTICLE 87D.02. PAINT SHALL BE APPLIED TO A MINIMUM THICKNESS OF 10 MILS.
3. TWO BOTTOM ASSEMBLIES USED TOGETHER MAY BE REQUIRED FOR SOME INSTALLATIONS.
4. PROVIDE TWO SUPPORTS PER JOINT, TWO FEET FROM JOINT.
5. DESIGN SUPPORTS DETAILS FOR WATER MAIN LARGER THAN 16".
6. STEEL SHALL BE A- 36.
7. WELDING SHALL BE E-70XX.

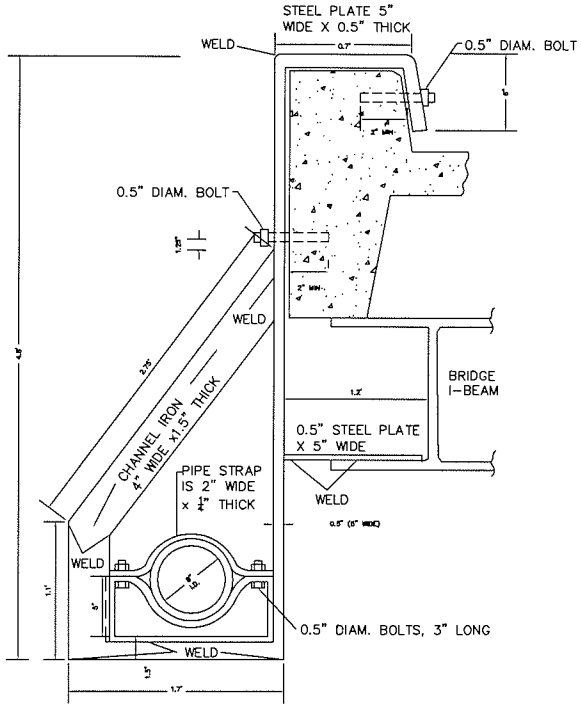

PIPE HANGER SECTION
(FOR 8" DIAMETER PIPE)
N.T.S.

NOTES:
1. PROVIDE TWO SUPPORTS PER JOINT, TWO FEET FROM JOINT.
2. ENGINEER SHALL DESIGN SUPPORT DETAILS FOR WATER MAINS LARGER THAN 8" IN DIAMETER.
3. STEEL SHALL BE A-36
4. WELDING SHALL BE E-70XX.
5. ALTERNATE DESIGN MAY BE SUBMITTED BY THE ENGINEER FOR APPROVAL BY FULTON COUNTY PUBLIC WORKS DEPT.
6. RESTRAINED JOINTS EQUAL TO GRIP TIGHT OR APPROVED EQUAL SHALL BE USED TWO JOINTS EITHER SIDE OF THE SUSPENDED PIPE.

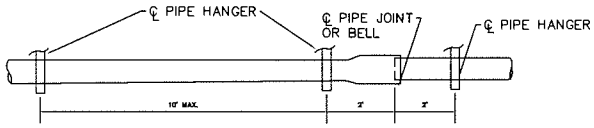

PLAN FOR PIPE HANGER SPACING
N.T.S.

FULTON COUNTY STANDARD DETAIL 119
TYPICAL PIPE HANGER AND SUPPORT DETAILS

DATE	REVISIONS	DATE	REVISIONS

DGS/DRN/CHKD: CMS
APPROVED: REW
DATE: 12-2-05

FULTON COUNTY

FULTON COUNTY PUBLIC WORKS
141 PRYOR ST. ATLANTA, GA. 30303
404-730-7400 FAX: 404-224-0498

DRAWING NO. 119

MAXIMUM
PERMISSIBLE DEFLECTIONS

SIZE (NOM)	PUSH-ON JOINT (18 FT. JOINTS)		MECHANICAL JOINT (18 FT. JOINTS)	
	DEGREE	MAX. OFFSET	DEGREE	MAX. OFFSET
3"	4.0	15"	4.5	17"
4"	4.0	15"	4.5	17"
6"	4.0	15"	4.5	17"
8"	4.0	15"	4.5	17"
10"	4.0	15"	4.5	17"
12"	4.0	15"	4.5	17"
14"	2.5	9.4"	3.0	11"
16"	2.0	7.5"	3.0	11"
20"	2.0	7.5"	2.0	7.5"
24"	2.0	7.5"	2.0	7.5"
30"	1.5	5.5"	2.0	7.5"
36"	1.5	5.5"	2.0	7.5"
42"	1.5	5.5"	1.5	5.5"
48"	1.5	5.5"	1.5	5.5"

NOTES:

1. WHEN A PIPE IS DEFLECTED, THE PIPE SHALL FIRST BE ASSEMBLED IN A STRAIGHT LINE, BOTH HORIZONTALLY AND VERTICALLY BEFORE THE DEFLECTION IS MADE.
2. FOR MECHANICAL JOINT PIPE, THE BOLTS SHALL BE PARTIALLY TIGHTENED BEFORE THE LENGTH OF PIPE IS DEFLECTED. ANY SUPPORTED PIPE, SHALL BE SO SUPPORTED THAT THERE IS ZERO DEFLECTION EXCEPT WHERE EITHER A HORIZONTAL OR VERTICAL CURVE ON A BRIDGE OR OTHER STRUCTURE IS INVOLVED.
3. THRUST RESTRAINTS MAY BE REQUIRED ON THE DEFLECTED JOINTS.

FULTON COUNTY STANDARD DETAIL 120
MAXIMUM PERMISSIBLE JOINT DEFLECTIONS

DATE	REVISIONS	DATE	REVISIONS

DGS/DRN/CHKD: CMS
APPROVED: REW
DATE: 12-2-05

FULTON COUNTY

FULTON COUNTY PUBLIC WORKS
141 PRYOR ST. ATLANTA, GA. 30303
404-730-7400 FAX: 404-224-0498

DRAWING NO. 120

NOM. PIPE DIA.	BELL DEPTH	BOLTS				JOINT ACCESSORY WEIGHT-Lbs.
		DIAMETER	LENGTH	NUMBER PER JOINT	REC. TORQUE Ft.-Lbs.	
4	2 1/2"	3/4"	3 1/2"	4	75-90	10
6	2 1/2"	3/4"	3 1/2"	6	75-90	16
8	2 1/2"	3/4"	4"	6	75-90	25
10	2 1/2"	3/4"	4"	8	75-90	30
12	2 1/2"	3/4"	4"	8	75-90	40
14	3 1/2"	3/4"	4 1/2"	10	75-90	45
16	3 1/2"	3/4"	4 1/2"	12	75-90	55
18	3 1/2"	3/4"	4 1/2"	12	75-90	65
20	3 1/2"	3/4"	4 1/2"	14	75-90	85
24	3 1/2"	3/4"	5"	16	75-90	105
30	4"	1"	6"	20	100-120	220
36	4"	1"	6"	24	100-120	285
42	4"	1 1/4"	6"	28	120-150	400
48	4"	1 1/4"	6"	32	120-150	475

FULTON COUNTY STANDARD DETAIL 121
MECHANICAL JOINT BOLT USAGE CHART

DATE	REVISIONS	DATE	REVISIONS

DGS/DRN/CHKD: CMS
APPROVED: REW
DATE: 12-2-05

FULTON COUNTY

FULTON COUNTY PUBLIC WORKS
141 PRYOR ST. ATLANTA, GA. 30303
404-730-7400 FAX: 404-224-0498

DRAWING NO. 121

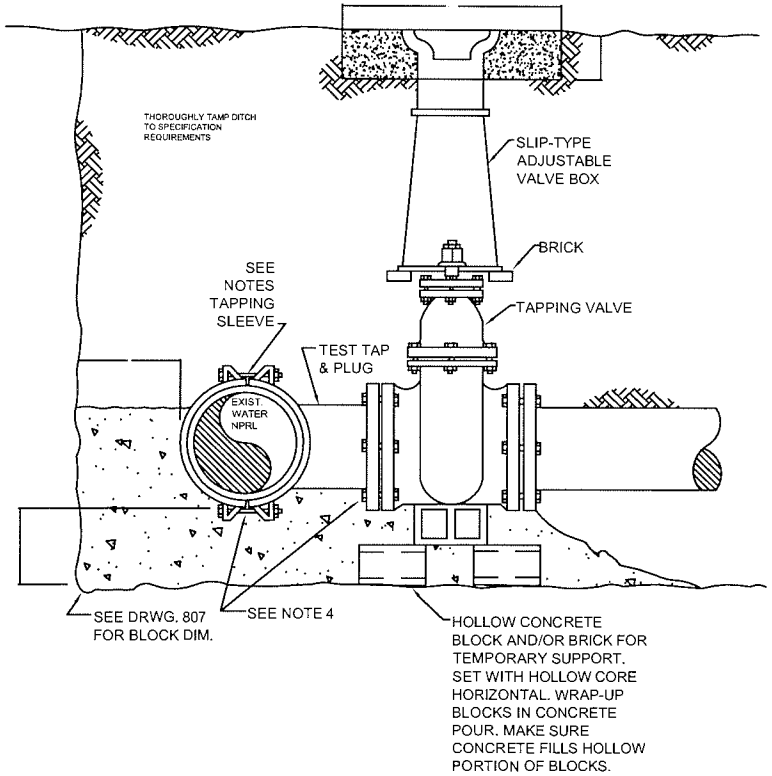

NOTES:

1. TEMPORARILY SUPPORT TAPPING SADDLE AND VALVE AND APPLY STANDARD HYDROSTATIC TEST.
2. IF NO LEAKS, POUR INDICATED PERMENANT CONCRETE BLOCK AND SUPPORT PAD.
3. MAKE TAP, LINE EXTENSION AND BACKFILL.
4. COVER GLANDS AND BOLTS WITH HEAVY POLYETHELENE SHEETING TO KEEP CONCRETE FROM BONDING. TYPICAL WHENEVER BOLTS OR GLANDS MAY BE "WRAPPED-UP" IN CONCRETE.
5. COAT TAPPING SLEEVE AND BOLTS WITH AN APPROVED BITUMASTIC COATING BEFORE POURING CONCRETE. TYPICAL FOR ALL STEEL INCLUDING RODS, COUPLINGS, STRAPS, AND OTHER BURIED STEEL. SEE NOTE 3, DRWG. 127 FOR COATING.

FULTON COUNTY STANDARD DETAIL 122
TAPPING SLEEVE AND VALVE INSTALLATION DETAILS

DATE	REVISIONS	DATE	REVISIONS

DGS/DRN/CHKD: CMS
APPROVED: REW
DATE: 12-2-05

FULTON COUNTY

FULTON COUNTY PUBLIC WORKS
141 PRYOR ST. ATLANTA, GA. 30303
404-730-7400 FAX: 404-224-0498

DRAWING NO. 122

MAXIMUM TAPPING SLEEVE LENGTH

MAIN & TAP (IN. NOMINAL)	LENGTH (ALONG RUN)
6x6, 6x3, 6x4, 6x2	18"
8x2, 8x3, 8x4, 8x6	19"
8x8	21"
10x2, 10x3, 10x4, 10x6	19"
10x8, 10x10	23"
12x2, 12x3, 12x5, 12x6	19"
12x8	21"
12x10, 12x12	25"

NOTES:

1. ALL TAPPING SLEEVES AND VALVES SHALL BE HYDROSTATICALLY TESTED BEFORE TAP IS MADE. SEE DRWG. 123 FOR TYPICAL INSTALLATION AND NOTES.
2. WORKMEN INSTALLING TAPPING SLEEVE AND VALVE SHALL FOLLOW MANUFACTURER'S INSTALLATION PROCEDURES AND THE REQUIRMENTS OF FULTON COUNTY ENGINEER'S OFFICE.

FULTON COUNTY STANDARD DETAIL 123
TAPPING SLEEVE LENGTH

DATE	REVISIONS	DATE	REVISIONS

DGS/DRN/CHKD: CMS
APPROVED: REW
DATE: 12-2-05

FULTON COUNTY

FULTON COUNTY PUBLIC WORKS
141 PRYOR ST. ATLANTA, GA. 30303
404-730-7400 FAX: 404-224-0498

DRAWING NO. 123

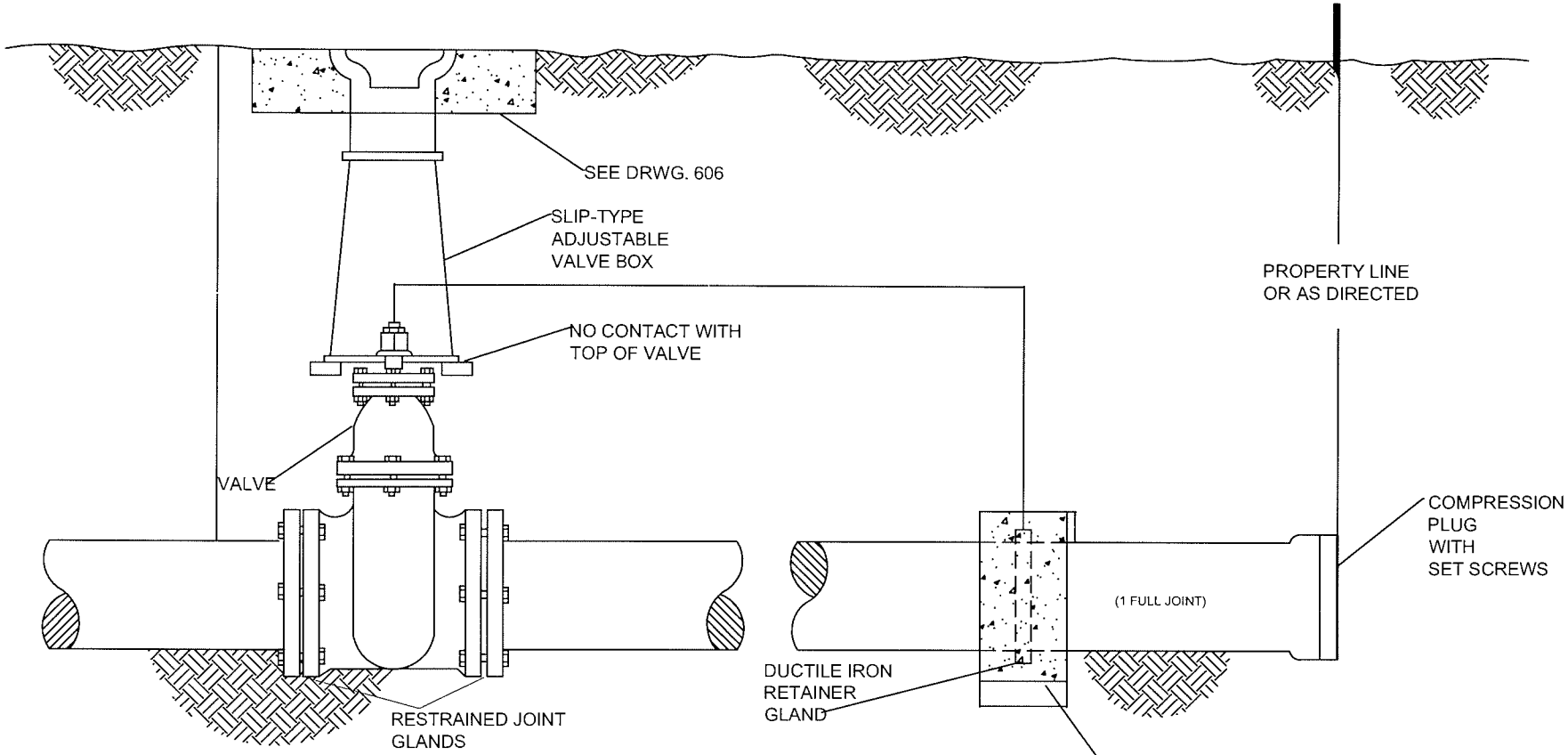

NOTES:

1. STUB OUT MUST BE HYDROSTATICALLY TESTED WITH REST OF WATER MAIN.
2. IN LIEU OF SLIP-JOINT AND COMPRESSION PLUG, AN M.J. JOINT MAY BE USED WITH AN M.J. PLUG.

FULTON COUNTY STANDARD DETAIL 124 STUB OUT DETAIL		DATE	REVISIONS	DATE	REVISIONS	DGS/DRN/CHKD: CMS APPROVED: REW DATE: 12-2-05	FULTON COUNTY	FULTON COUNTY PUBLIC WORKS 141 PRYOR ST. ATLANTA, GA. 30303 404-730-7400 FAX: 404-224-0498	DRAWING NO. 124

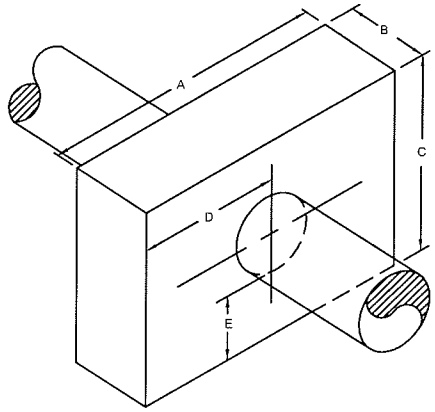

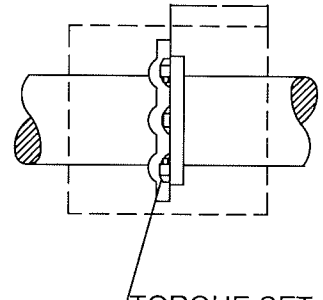

TORQUE SET SCREWS IN ACCORDANCE WITH MANUFACTURER'S INSTRUCTIONS. INSPECTOR MUST WITNESS INSTALLATION.

MINIMUM DIMENSIONS IN FEET FOR CONCRETE COLLAR ON DUCTILE IRON PIPE TO BE USED WITH EMBEDDED DUCTILE IRON RETAINER GLAND

PIPE SIZE	A	B	C	D	E	VOLUME CU. YDS.	CONC. WT.	THRUST
4"	3'-6"	3'-0"	1'-5"	1'-6"	1'-0"	0.55	2230	3150
6"	4'-0"	3'-0"	2'-7"	2'-0"	1'-0"	1.15	4650	7070
8"	4'-6"	3'-0"	3'-0"	2'-3"	1'-3"	1.50	6075	12,570
10"	5'-2"	3'-0"	3'-2"	2'-7"	1'-3"	1.81	7330	19,635
12"	5'-9"	3'-0"	3'-8"	2'-10½"	1'-8"	2.34	9475	28,775
14"	6'-6"	3'-0"	4'-0"	3'-3"	1'-9"	2.89	11,700	38,490
16"	6'-9"	3'-0"	4'-9"	3'-3"	2'-3"	3.56	14,410	50,270

NOTES:

1. ALL MAINS GREATER THAN 13" I.D. SHALL BE INDIVIDUALLY CALCULATED BY THE FULTON COUNTY ENGINEERING DEPARTMENT.
2. SOIL CONDITIONS SHALL BE VERIFIED BY THE ENGINEER BEFORE THRUST RESTRAINT DESIGN IS IMPLEMENTED.
3. PIPE MUST BE DUCTILE IRON.

DESIGN DATA:

1. DIMENSION OF THRUST RESTRAINT IN FEET BASED ON 2000 POUNDS PER SQUARE FOOT SOIL BEARING PRESSURE AND 230 PER SQUARE INCH TEST PRESSURE. ACTUAL INSIDE DIAMETER OF DUCTILE IRON PIPE, CLASS 31, USED AS STANDARD.
2. CONCRETE SHALL BE CLASS A, 3000 P.S.I.
3. UNDER ADVERSE CONTRUCTION CONDITIONS, CONCRETE SHALL BE "HIGH EARLY" TYPE.

FULTON COUNTY STANDARD DETAIL 125
THRUST RESTRAINT CONCRETE COLLAR

DATE	REVISIONS	DATE	REVISIONS

DGS/DRN/CHKD: CMS
APPROVED: REW
DATE: 12-2-05

FULTON COUNTY

FULTON COUNTY PUBLIC WORKS
141 PRYOR ST. ATLANTA, GA. 30303
404-730-7400 FAX: 404-224-0498

DRAWING NO. 125

	PIPE SIZE	ROD DIA.	NO. RODS	TOTAL THRUST (Lbs)
TEES, PLUGS & VALVES	6"	3/4"	2/3	5,655
	8"	3/4"	2/3	10,055
	10"	3/4"	3	15,710
	12"	3/4"	4	22,620
	14"	3/4"	6	30,800
	16"	3/4"	4	40,215
	20"	3/4"	6	62,835
	24"	3/4"	8	90,480
	30"	1"	6	141,375
	36"	1"	6	203,595
11¼° B	6"	3/4"	2	1,110
	8"	3/4"	2	1,970
	10"	3/4"	2	3,080
	12"	3/4"	2	4,435
	14"	3/4"	2	6,035
	16"	3/4"	2	7,885
	20"	3/4"	2	12,320
	24"	3/4"	2	17,740
	30"	1"	2	27,720
	36"	1"	2	39,910
22½° B	6"	3/4"	2	2,210
	8"	3/4"	2	3,925
	10"	3/4"	2	6,130
	12"	3/4"	2	8,825
	14"	3/4"	2	12,015
	16"	3/4"	2	15,690
	20"	3/4"	2	24,515
	24"	3/4"	2	35,305
	30"	1"	2	55,160
	36"	1"	2	79,435
45° B	6"	3/4"	2/3	4,430
	8"	3/4"	2/3	7,700
	10"	3/4"	2	12,025
	12"	3/4"	4	17,312
	14"	3/4"	4	23,565
	16"	3/4"	4	30,780
	20"	3/4"	4	48,090
	24"	3/4"	6	69,250
	30"	1"	4	108,205
	36"	1"	6	155,810
90°B	6"	3/4"	2/3	8,000
	8"	3/4"	3	14,220
	10"	3/4"	4	22,214
	12"	3/4"	6	32,000
	14"	3/4"	6	43,540
	16"	3/4"	4	56,870
	20"	3/4"	6	88,860
	24"	3/4"	8	127,960
	30"	1"	6	199,930
	36"	1"	6	287,900

NOTES:

1. ON PIPE SIZES 6"-14" ROD AND NUT WILL HAVE MIN. YIELD STRENGTH OF 50,000 PSI. ON PIPE SIZES 16"-24" ROD AND NUT WILL HAVE MIN. YIELD STRENGTH OF 100,000 PSI.
2. RODS HAVE 6" OF THREAD ON EACH END.
3. ALL METAL TO BE CLEANED AND COATED WITH AN APPROVED PROTECTIVE COATING FOLLOWING INSTALLATION AND PRIOR TO BACKFILLING. SEE NOTE 3, DRWG. 127.

FULTON COUNTY STANDARD DETAIL 126
THRUST RESTRAINTS: TIE ROD CHART

DATE	REVISIONS	DATE	REVISIONS

DGS/DRN/CHKD: CMS
APPROVED: REW
DATE: 12-2-05

FULTON COUNTY

FULTON COUNTY PUBLIC WORKS
141 PRYOR ST. ATLANTA, GA. 30303
404-730-7400 FAX: 404-224-0498

DRAWING NO. 126

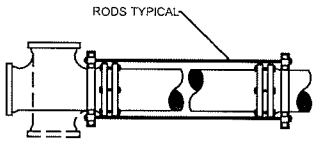

I
FITTING RESTRAINT
STRAPS & RODS

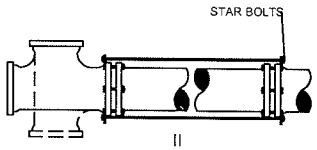

II
FITTING RESTRAINT
STAR BOLTS & RODS

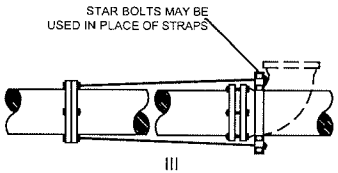

III
FITTING RESTRAINT
FLANGE & MJ

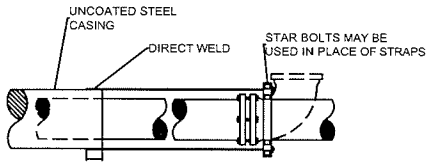

IV
FITTING RESTRAINT
DIRECT WELD TO STEEL CASING
(10" OR LESS MAINS ONLY)

NOTES:

1. SEE DWG. 126 FOR NUMBER AND DIAMETER OF RODS REQUIRED.

2. NO FLANGES ARE TO BE BURIED.

3. AFTER INSTALLATION, TIE-RODS AND CLAMP ASSEMBLIES SHALL BE CLEANED SND THOROUGHLY COATED WITH ROYSTON LABORATIORIES, INC. ROSKOTE PLASTIC NO. A 939 OR KOPPERS CO. , INC. BITUMASTIC SUPERSERVICE BLACK OR APPROVED EQUIVALENT.

4. WHEN RESTRAINING FITTINGS TO STEEL CASING PIPE, THE TIE-RODS MUST BE DIRECT WELDED TO THE CASING - USE OF STAR BOLTS PROHIBITED. CASING MUST BE FULLY WELDED THROUGHOUT ITS LENGTH AND BE A MINIMUM OF 30' IN LENGTH. AREA TO BE WELDED MUST BE COMPLETELY BARE AND FREE OF ANY COATING MATERIAL.

		DATE	REVISIONS	DATE	REVISIONS				DRAWING NO.
FULTON COUNTY STANDARD DETAIL 127 THRUST RESTRAINTS: TIE-ROD INSTALLATION						DGS/DRN/CHKD: CMS APPROVED: REW DATE: 12-2-05	FULTON COUNTY	FULTON COUNTY PUBLIC WORKS 141 PRYOR ST. ATLANTA, GA. 30303 404-730-7400 FAX: 404-224-0498	127

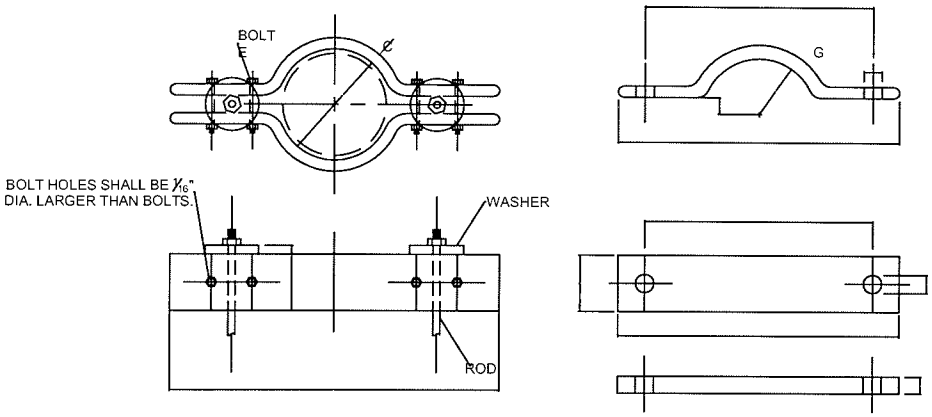

STEEL SOCKET CLAMP DIMENSIONS (INCHES)							
SIZE	A	B	C	D	E	T	ROD & C WASH SIZE
4	5	14 5/8	1/2	2	5/6 x 3 1/2	5/8	3/4
6	7 1/8	18 7/8	1/2	2	5/6 x 3 1/2	5/8	3/4
8	9 5/16	19 1/8	5/8	2 1/2	5/6 x 3 3/4	5/8	3/4
10	11 1/2	21 3/8	5/8	2 1/2	5/6 x 3 3/4	3/4	3/4
12	13 1/2	25 1/6	5/8	3	5/6 x 3 3/4	3/4	3/4
14	13 3/4	28 1/4	3/4	3	7/8 x 4 1/2	7/8	3/4
16	17 7/8	31 3/8	3/4	4	7/8 x 4 1/2	7/8	3/4
20	22 1/8	37 3/4	3/4	4 1/2	1 1/4 x 5	1 1/8	3/4
24	26 3/8	44 1/4	3/4	5	1 1/2x5 1/2	1 1/4	3/4

ABOVE ANCHOR STRAP DIMENSIONS (INCHES)						
SIZE	B	G	H	L	R	S
4	10 1/8	5/8 X 2 1/2	13/16	12 1/2	2 1/2	3/4
6	12 1/8	5/8 X 2 1/2	13/16	14 1/2	3 9/16	3/4
8	14 3/8	5/8 X 2 1/2	13/16	16 3/4	4 21/32	3/4
10	16 11/16	5/8 X 2 1/2	1 1/16	19 1/16	5 3/4	3/4
12	19 3/16	5/8 X 3	1 1/16	22 5/16	6 3/4	7/8

NOTES:

1. INSTALLATION OF, AND MATERIALS FOR RODS, CLAMPS, STRAPS, BOLTS AND WASHERS SHALL CONFORM TO THE NATIONAL FIRE CODES - NFFA NO. 24 LATEST REVISION.
2. YOKES AND ANCHOR STRAPS FOR FITTINGS LARGER THAN 12" SHALL BE DESIGNED AND APPROVED FOR SPECIFIC INSTALLATION.
3. RODS TO BE HIGH TENSILE, NOT ROLLED STEEL WITH TENSILE STRENGTH OF 110,000 P.S.I. AND A MIN. OF 95,000 YIELD STRENGTH.
4. NUTS TO HAVE HEAVY DUTY SEMI-FINISH WITH NATIONAL COURSE THREADS.
5. AFTER INSTALLATION TIE RODS AND CLAMP ASSEMBLY SHALL BE THOROUGHLY COVERED WITH ROYSTON LABORATORIES, INC. ROSKOTE MASTIC ND A939 OR KOPPERS CO., INC. BITUMASTIC SUPERSERVICE BLACK OR APPROVED EQUIVALENT.

FULTON COUNTY STANDARD DETAIL 128
THRUST RESTRAINTS STRAP AND ROD DETAILS

DATE	REVISIONS	DATE	REVISIONS

DGS/DRN/CHKD: CMS
APPROVED: REW
DATE: 12-2-05

FULTON COUNTY

FULTON COUNTY PUBLIC WORKS
141 PRYOR ST. ATLANTA, GA. 30303
404-730-7400 FAX: 404-224-0498

DRAWING NO.
128

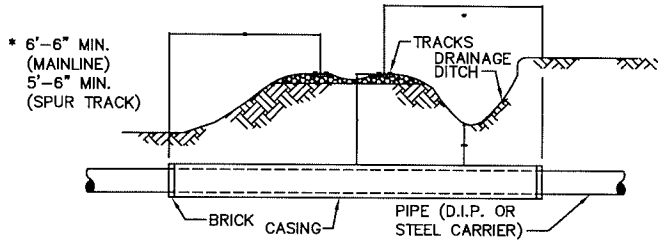

RAIL ROADS

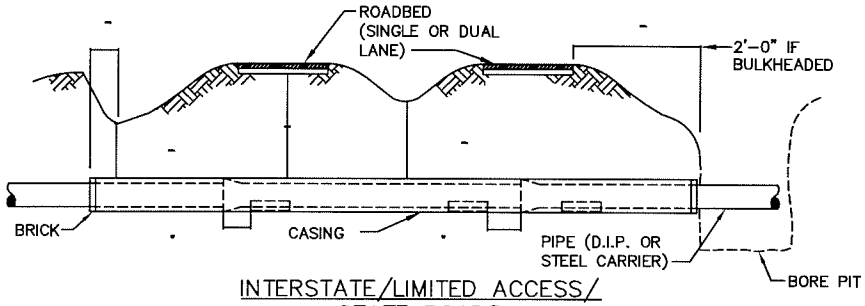

INTERSTATE/LIMITED ACCESS/
STATE ROADS

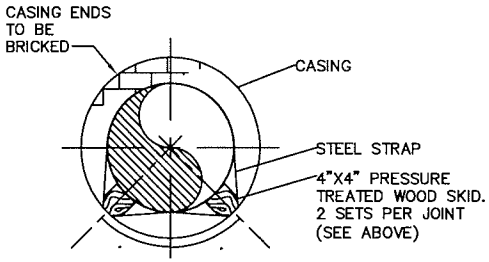

CASING-END VIEW
PIPE ACCESIBLE

BORED CASINGS			
PIPE SIZE	PIPE O.D.	CASING SIZE	CASING I.D.
6"	6.90"	12"	11.376"
8"	9.05"	16"	14.314"
12"	13.20"	20"	17.938"
16"	17.40"	24"	21.564"
20"	21.60"	28"	27.0"
24"	25.80"	36"	35.0"

NOTE: IF CASING UNDER RAILROAD IS NOT COATED OR CATHODICALLY PROTECTED, INCREASE THICKNESS .062"

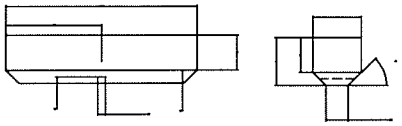

WOOD SKID DETAIL

FULTON COUNTY STANDARD DETAIL 129
CASING/PIPE SUPPORT INSTALLATION

DATE	REVISIONS	DATE	REVISIONS

DGS/DRN/CHKD: CMS
APPROVED: REW
DATE: 12-2-05

FULTON COUNTY

FULTON COUNTY PUBLIC WORKS
141 PRYOR ST. ATLANTA, GA. 30303
404-730-7400 FAX: 404-224-0498

DRAWING NO.
129

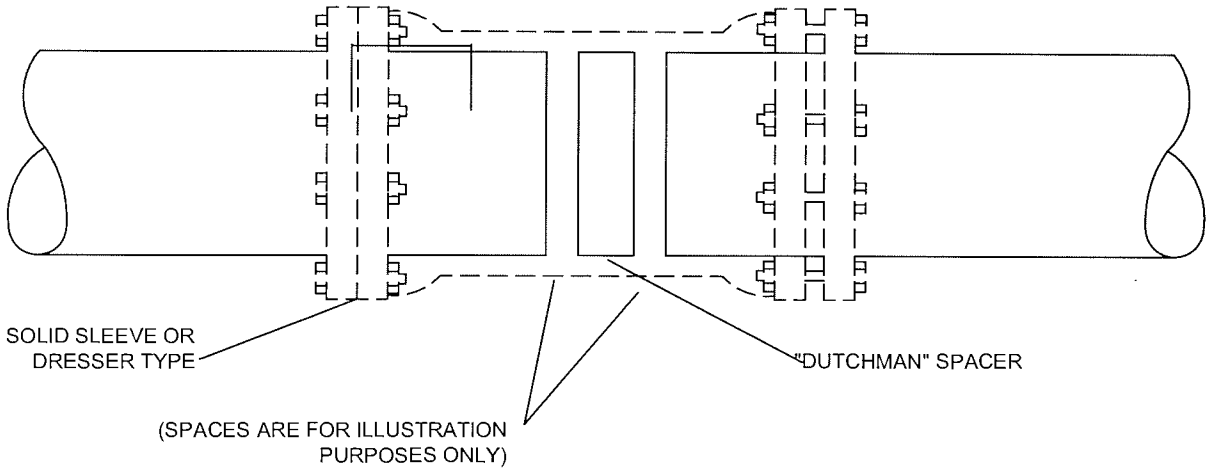

NOTES:

1. IF "G" IS GREATER THAN $\frac{1}{2}$" AT IT'S NARROWEST POINT, THEN A FULL CIRCLE SPACER OR "DUTCHMAN" MUST BE CUT AND PLACED IN THE GAP BEFORE THE SLEEVE IS USED TO CLOSE THE JOINT.
2. THE "DUTCHMAN" SPACER SHALL BE CUT TO A WIDTH NO LESS THAN $\frac{1}{4}$" LESS THAN THE NARROWEST WIDTH OF "G".
3. EACH PIPE SPIGOT SHALL BE MARKED TO INDICATE THE POINT WHERE THE SLEEVE WILL BE PROPERLY CENTERED OVER THE POINT.
4. "FULL-CIRCLE" REPAIR CLAMPS ARE NOT APPROVED FOR JOINING PIPE. SUCH CLAMPS ARE SPECIFICALLY DESIGNED FOR REPAIRS ONLY.
5. IF "STEEL" SLEEVE IS USED, PROPERLY COAT BEFORE BACKFILLING.

FULTON COUNTY STANDARD DETAIL 130
PIPE JOINING: USE OF SOLID SLEEVE

DATE	REVISIONS	DATE	REVISIONS

DGS/DRN/CHKD: CMS
APPROVED: REW
DATE: 12-2-05

FULTON COUNTY

FULTON COUNTY PUBLIC WORKS
141 PRYOR ST. ATLANTA, GA. 30303
404-730-7400 FAX: 404-224-0498

DRAWING NO. 130

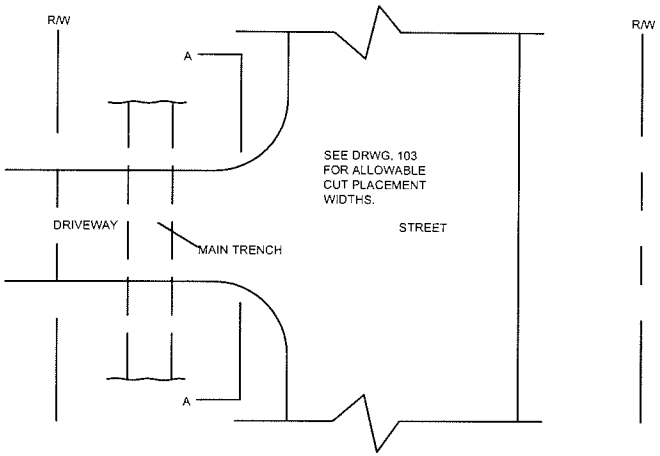

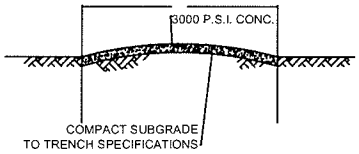

CONCRETE
"A" - "A"

-- FINISH SURFACE OF REPAIRED AREA TO MATCH EXISTING SURFACE. EDGES OF CUT TO BE SAWN VERTICAL. EXPANSION MATERIAL TO BE USED AS DIRECTED.

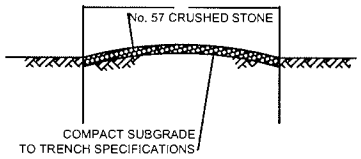

GRAVEL
"A" - "A"

NOTE:

1. FINISHED GRADE TO BE FLUSH WITH THE EDGE OF THE DRIVE - TYPICAL ALL DRIVES.

(SEE DRWG. 110 FOR STREET CUT REPAIRS)

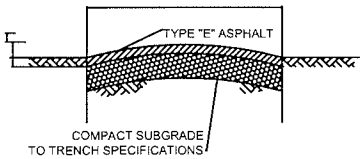

ASPHALT
"A" - "A"

FULTON COUNTY STANDARD DETAIL 131
DRIVEWAY CUT REPAIRS CONCRETE, GRAVEL & ASPHALT

DATE	REVISIONS	DATE	REVISIONS

DGS/DRN/CHKD: CMS
APPROVED: REW
DATE: 12-2-05

FULTON COUNTY

FULTON COUNTY PUBLIC WORKS
141 PRYOR ST. ATLANTA, GA. 30303
404-730-7400 FAX: 404-224-0498

DRAWING NO.
131

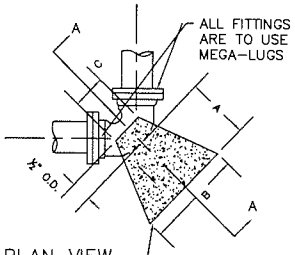

PLAN VIEW
N.T.S.

HORIZONTAL THRUST DETAIL
N.T.S. ①

GENERAL NOTES:

1. THRUST BLOCK DIMENSIONS ARE BASED ON 2000 LB. PER SQ. FT. SOIL BEARING PRESSURE AND 250 LBS. PER SQ. IN. TEST PRESSURE. ACTUAL INSIDE DIAMETER OF DUCTILE IRON PIPE CLASS 52 USED AS STANDARD.
2. SOIL CONDITIONS SHALL BE VERIFIED BY ENGINEER BEFORE THRUST BLOCK IS CONSTRUCTED WHERE SOIL BEARING PRESSURE IS LESS THAN 2000 LB/FT. THRUST BLOCK BEARING AREA SHALL BE INCREASED APPROPRIATELY.
3. ALL CONCRETE SHALL BE CLASS A, 4000 P.S.I.

SECTION A–A
N.T.S.

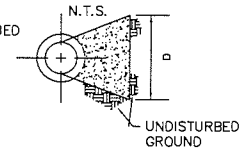

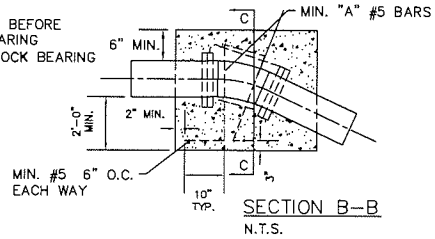

SECTION B–B
N.T.S.

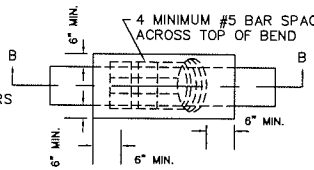

PLAN VIEW
N.T.S.

UPWARD THRUST DETAIL ②
N.T.S.

MIN. #5 BARS 12" O.C.

SECTION C–C
N.T.S.

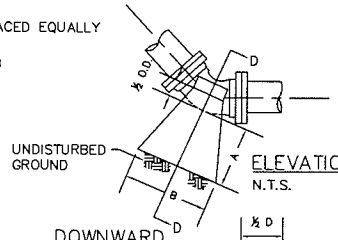

ELEVATION
N.T.S.

DOWNWARD THRUST DETAIL ③
N.T.S.

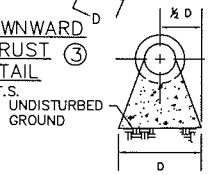

SECTION D–D
N.T.S.

DIMENSIONS FOR CONCRETE BLOCKING FOR BENDS–DOWNWARD THRUST

BEND	SIZE	A (FT)	B (FT)	C (IN)	D (FT)	VOLUME (CU. YD.)
11 ¼°	6"	1.0	2.0	7"	1.0	0.04
	8"	1.0	2.0	7"	1.0	0.05
	12"	1.0	2.0	11"	2.0	0.1
	16"	2.0	3.0	15"	2.0	0.3
	20"	2.0	3.0	19"	3.0	0.5
22 ½°	6"	1.0	2.0	7"	1.0	0.05
	8"	1.0	2.0	7"	2.0	0.1
	12"	2.0	3.0	11"	2.0	0.3
	16"	2.0	4.0	15"	3.0	0.6
	20"	3.0	5.0	19"	3.0	1.0
45°	6"	1.5	2.0	7"	1.5	0.11
	8"	2.0	3.0	7"	2.0	0.3
	12"	2.0	4.0	11"	3.0	0.7
	16"	3.0	5.0	15"	4.0	1.4
	20"	4.0	8.0	19"	5.0	2.8
90°	6"	1.75	2.5	7"	2.0	0.2
	8"	2.0	3.0	7"	3.0	0.4
	12"	4.0	6.0	11"	4.0	2.1
	16"	4.0	7.0	15"	5.0	3.1
	20"	5.0	8.0	19"	7.0	5.3

DIMENSIONS FOR CONNCRETE BLOCKING HORIZONTAL THRUST ①

BEND	SIZE	A (FT)	B (FT)	C (IN)	D (FT)	VOLUME (CU.YD.)
11 ¼°	6"	1.0	2.0	7"	1.0	0.04
	8"	1.0	2.0	7"	1.0	0.05
	12"	1.0	2.0	11"	2.0	0.1
	18"	2.0	3.0	15"	2.0	0.3
	20"	2.0	3.0	19"	3.0	0.5
22 ½°	6"	1.0	2.0	7"	1.0	0.05
	8"	1.0	2.0	7"	2.0	0.1
	12"	2.0	3.0	11"	2.0	0.3
	18"	2.0	4.0	15"	3.0	0.6
	20"	3.0	5.0	19"	3.0	1.0
45°	6"	1.5	2.0	7"	1.5	0.11
	8"	2.0	3.0	7"	2.0	0.3
	12"	2.0	4.0	11"	3.0	0.7
	18"	3.0	5.0	15"	4.0	1.4
	20"	4.0	6.0	19"	5.0	2.6
90°	6"	1.75	2.5	7"	2.0	0.2
	8"	2.0	3.0	7"	3.0	0.4
	12"	4.0	6.0	11"	4.0	2.1
	18"	4.0	7.0	15"	5.0	3.1
	20"	5.0	8.0	19"	7.0	5.3
TEE BRANCHES PLUGS & CAPS (FOR ALL CIRCUMSTANCES)	6"	1.5	2.0	7"	1.75	0.13
	8"	2.0	3.0	7"	2.0	0.3
	12"	2.0	4.0	11"	4.0	0.8
	18"	3.0	5.0	15"	5.0	1.5
	20"	4.0	7.0	19"	6.0	3.9

CONCRETE REQUIRED TO RESIST UPWARD THRUST

BEND	SIZE	VOLUME (CU. YD.)	"A" NO. OF VERT. BARS REQ'D.
11 ¼°	6"	0.3	2
	8"	0.5	2
	12"	1.4	2
	16"	2.4	3
	20"	3.8	3
22 ½°	6"	0.7	2
	8"	1.2	2
	12"	2.7	2
	16"	4.8	3
	20"	7.4	3
45°	6"	1.2	2
	8"	2.2	2
	12"	4.9	2
	16"	8.8	3
	20"	13.7	3
90°	6"	1.8	2
	8"	3.1	2
	12"	7.0	3
	16"	12.4	3
	20"	19.4	4

FULTON COUNTY STANDARD DETAIL 132
STANDARD THRUST BLOCKS FOR WATER

DATE	REVISIONS	DATE	REVISIONS

DGS/DRN/CHKD: REB
APPROVED: REW
DATE: 12-2-05

FULTON COUNTY

FULTON COUNTY PUBLIC WORKS
141 PRYOR ST. ATLANTA, GA. 30303
404-730-7400 FAX: 404-224-0498

DRAWING NO. 132

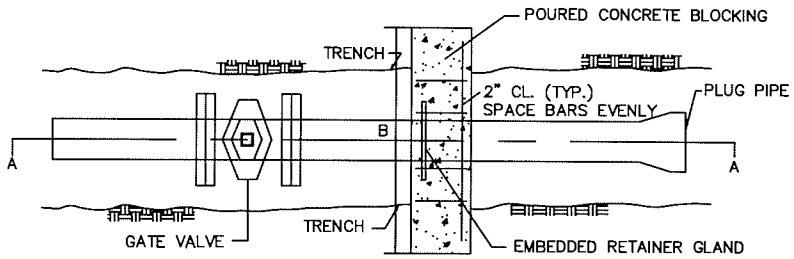

PLAN VIEW
n.t.s.

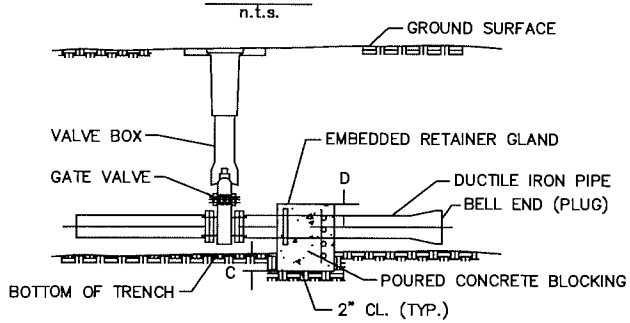

DETAIL A–A
n.t.s.

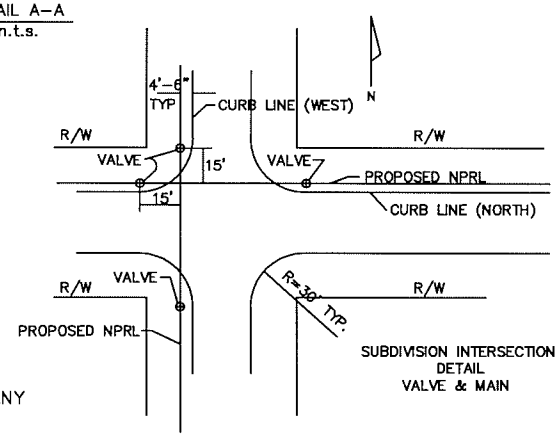

BLOCKING DETAILS

PIPE SIZE	A (IN.)	B (IN.)	C (IN.)	D (IN.)	REQD. STEEL (EACH WAY)
8"	10	32	12	8	4 – #4
10"	12	40	15	10	4 – #4
12"	14	54	24	12	4 – #4
16"	18	60	30	16	6 – #4

NOTES:
1. ANCHOR BLOCKING DETAIL TO BE USED AT THE END OF ANY COUNTY ROAD WHERE NPRL MAY BE EXTENDED AT A FUTURE DATE.
2. ALL CONCRETE TO BE 3000psi
3. ALL STEEL TO BE 60,000psi

FULTON COUNTY STANDARD DETAIL 133
MAIN EXTENSION BLOCKING DETAILS
SUBDIVISION INTERSECTION DETAIL VALVE MAIN

DATE	REVISIONS	DATE	REVISIONS

DGS/DRN/CHKD: REB
APPROVED: REW
DATE: 12-2-05

FULTON COUNTY

FULTON COUNTY PUBLIC WORKS
141 PRYOR ST. ATLANTA, GA. 30303
404-730-7400 FAX: 404-224-0498

DRAWING NO.
133

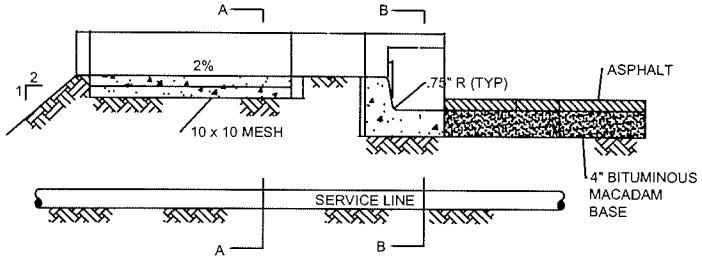

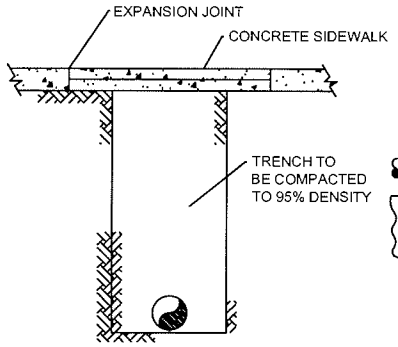

"A" - "A"

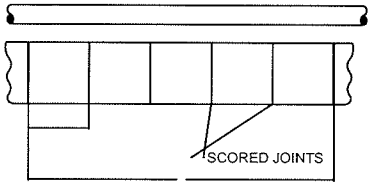

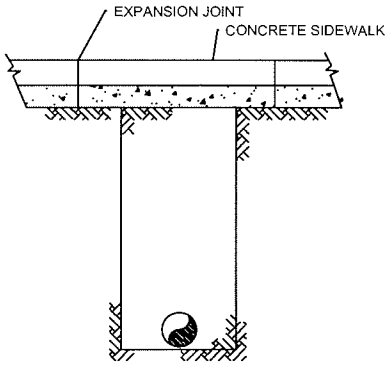

"B" - "B"

NOTES:

1. DETAILS ARE TYPICAL.
2. REPLACE SIDEWALKS, CURB AND GUTTER AND CURBING TO MATCH EXISTING MATERIALS AS DIRECTED.

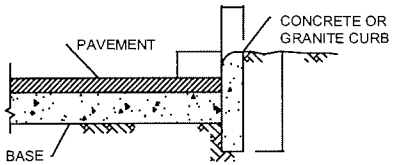

FULTON COUNTY STANDARD DETAIL 134 SIDEWALK, CURB AND GUTTER REPAIRS		DATE	REVISIONS	DATE	REVISIONS	DGS/DRN/CHKD: CMS APPROVED: REW DATE: 12-2-05	FULTON COUNTY	FULTON COUNTY PUBLIC WORKS 141 PRYOR ST. ATLANTA, GA. 30303 404-730-7400 FAX: 404-224-0498	DRAWING NO. 134

INDEX

DWG NO.	DESCRIPTION
300	INDEX AND GENERAL NOTES
301	TYPICAL SECTIONS STREETS
302	TYPICAL SECTIONS STREETS
303	TYPICAL SECTION (CUL-DE-SAC)
304	DRIVEWAY DETAILS
305	DIVIDED ENTRANCE DETAILS
306	MISCELLANEOUS DETAILS
307	CURB AND GUTTER DETAILS
308	STANDARD SIDEWALK SECTION
309	TYPICAL SECTION TWO LANE DECELERATION LANE DETAILS
310	LEFT TURN LANE WITH WIDING ON BOTH SIDES
311	LEFT TURN LANE WITH WIDING ON ONE SIDE
312	HANDICAP RAMP DETAILS
313	MINI ROUNDABOUT
314	CHICANES
315	SPEED TABLE
316	INTERSECTION HUMP
317	ONE LANE CHOKER
318	ENTRANCE TREATMENT
319	CENTER ISLAND
320	BEAM TYPE GUARD RAIL
321	BEAM TYPE GUARD RAIL (CONT.)
322	RAILROADS GRADE CROSSING, SECTIONS, DETAILS
323	RAILROADS GRADE CROSSING, SECTIONS, DETAILS (CONT.)
324	SIGNS STREET NAME, DETAILS & LOCATION
325	PAVEMENT WIDE

GENERAL NOTES

FULTON COUNTY STANDARD DETAIL
INDEX AND GENERAL NOTES

DATE	REVISIONS	DATE	REVISIONS

DGS/DRN/CHKD: CMS
APPROVED: REW
DATE: 12-02-05

FULTON COUNTY

FULTON COUNTY PUBLIC WORKS
141 PRYOR ST. ATLANTA, GA. 30303
404-730-7400 FAX: 404-730-6325

DRAWING NO.
INDEX 300

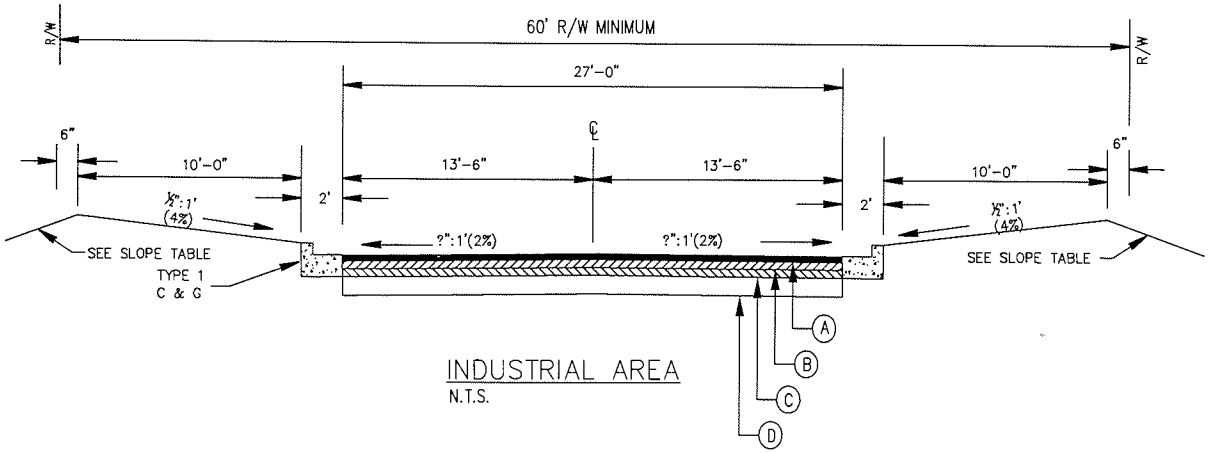

INDUSTRIAL AREA

N.T.S.

INDUSTRIAL & COUNTY ROADS

PAVEMENT MATERIAL SCHEDULE	
(A)	ASPH. CONC. 9.5 mm SUPERPAVE, 135 lb/yd^2 (1½")
(B)	ASPH. CONC. 19 mm SUPERPAVE, 220 lb/yd^2 (2")
(C)	ASPH. CONC. 25 mm SUPERPAVE, 330 lb/yd^2 (3")
(D)	GRADED AGGREGATE BASE CRS, 8"

THE DIR. OF PUBLIC WORKS DUE TO TRAFFIC CHARACTERISTICS MAY REQUIRE A HEAVIER PAVEMENT SECTION.

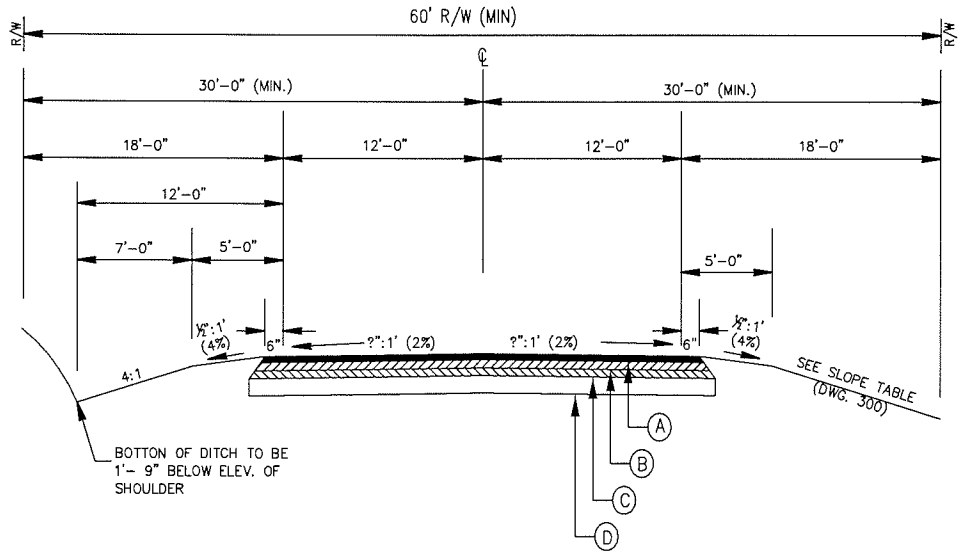

COUNTY ROADS, NOT CURBED

N.T.S.

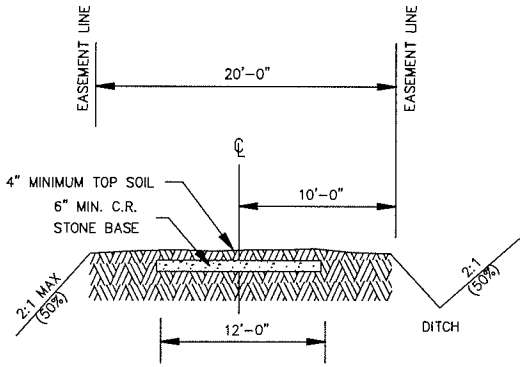

20' ACCESS EASEMENT

(DETENTION POND ROAD)

N.T.S.

FULTON COUNTY STANDARD DETAIL 301 TYPICAL SECTIONS STREETS	DATE	REVISIONS	DATE	REVISIONS	DGS/DRN/CHKD: KAH APPROVED: LJM DATE: 4-19-05	FULTON COUNTY	FULTON COUNTY PUBLIC WORKS 141 PRYOR ST. ATLANTA, GA. 30303 404-730-7400 FAX: 404-730-6325	DRAWING NO. 301

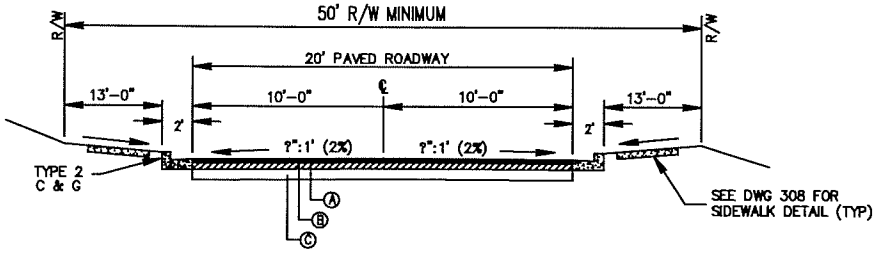

MAJOR SUB. DIV. STREETS & ENTRANCE ROADS

PAVEMENT MATERIAL SCHEDULE	
Ⓐ	ASPH. CONC. 9.5 mm SUPERPAVE, 135 lb/yd^2 (1?")
Ⓑ	ASPH. CONC. 19 mm SUPERPAVE, 220 lb/yd^2 (2")
Ⓒ	GRADED AGGREGATE BASE CRS, 8"

MAJOR SUBDIVISION STREET & ENTRANCE ROADS

SERVING 40 OR MORE HOUSING UNITS
N.T.S.

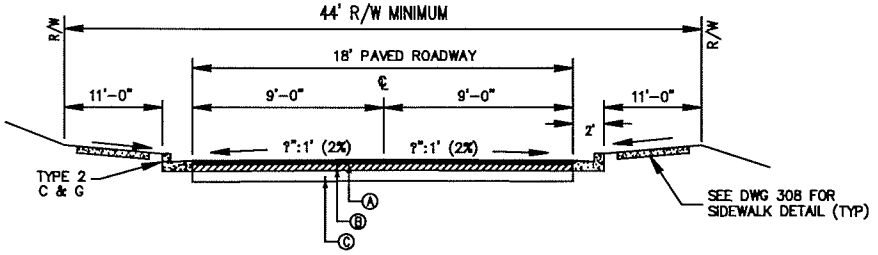

MINOR SUB. DIV. STREETS & SIDE ROADS

PAVEMENT MATERIAL SCHEDULE	
Ⓐ	ASPH. CONC. 9.5 mm SUPERPAVE, 135 lb/yd^2 (1?")
Ⓑ	ASPH. CONC. 19 mm SUPERPAVE, 220 lb/yd^2 (2")
Ⓒ	GRADED AGGREGATE BASE CRS, 6"

MINOR SUBDIVISION STREET & SIDE ROADS

SERVING LESS THAN 40 HOUSING UNITS
N.T.S.

FULTON COUNTY STANDARD DETAIL 302
TYPICAL SECTIONS
STREETS

DATE	REVISIONS	DATE	REVISIONS

DGS/DRN/CHKD: KAH
APPROVED: LJM
DATE: 4-19-05

FULTON COUNTY

FULTON COUNTY PUBLIC WORKS
141 PRYOR ST. ATLANTA, GA. 30303
404-730-7400 FAX: 404-730-6325

DRAWING NO. 302

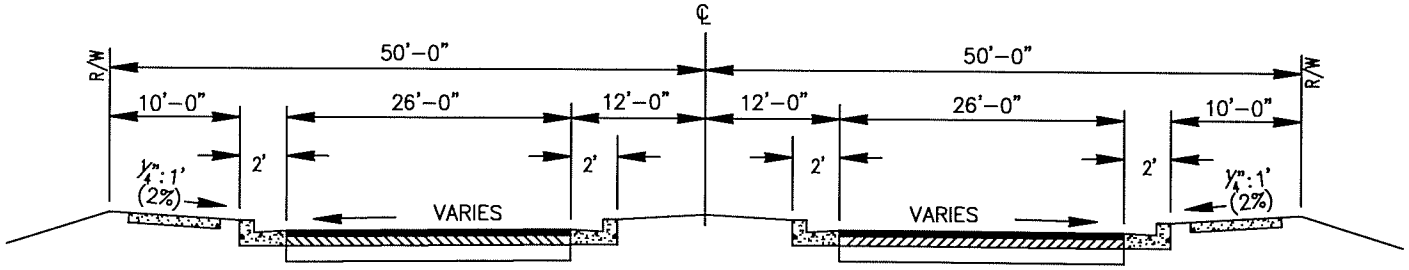

SECTION A-A

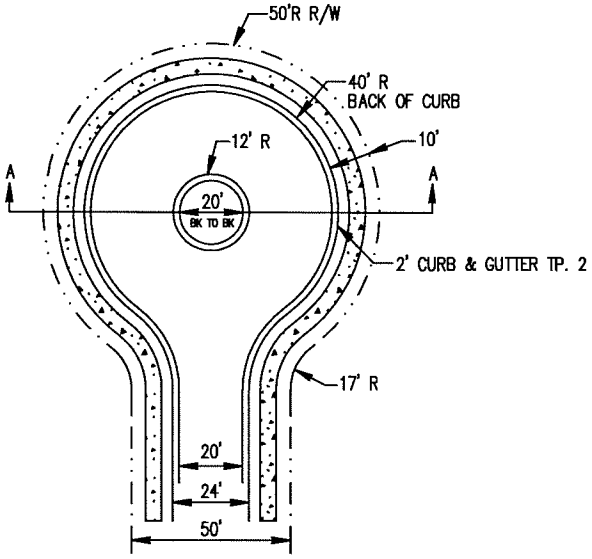

CUL-DE-SAC PLAN
MAJOR SUBDIVISION STREET
N.T.S.

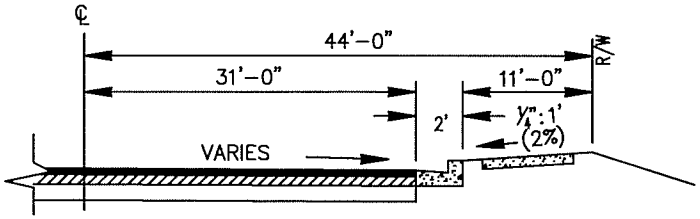

SECTION B-B
(HALF SECTION)

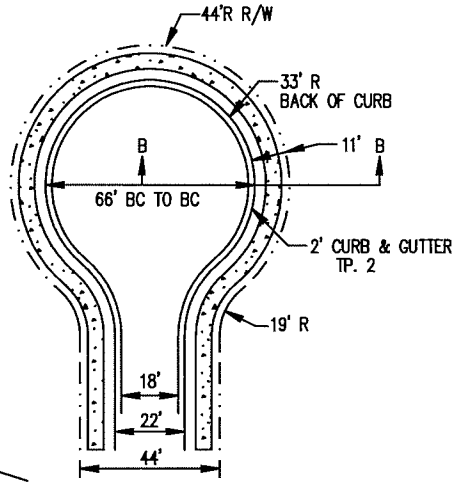

CUL-DE-SAC PLAN
MINOR SUBDIVISION STREET
N.T.S.

FULTON COUNTY STANDARD DETAIL 303 TYPICAL SECTIONS CUL-DE-SAC		DATE	REVISIONS	DATE	REVISIONS	DGS/DRN/CHKD: KAH APPROVED: LJM DATE: 4-19-05	FULTON COUNTY FULTON COUNTY PUBLIC WORKS 141 PRYOR ST. ATLANTA, GA. 30303 404-730-7400 FAX: 404-730-6325	DRAWING NO. 303

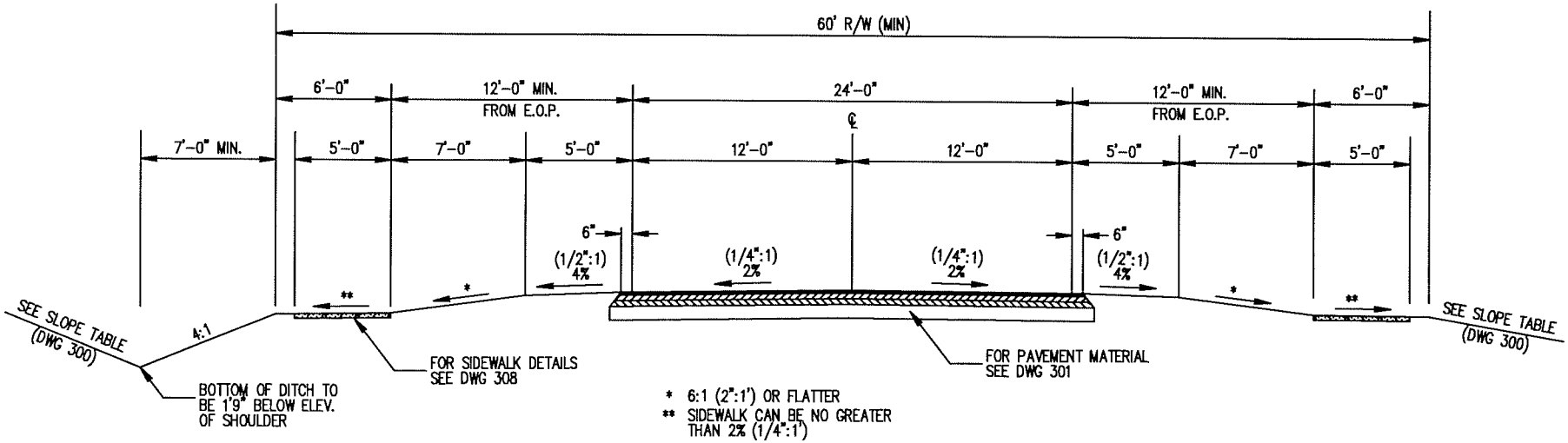

COUNTY ROADS, NOT CURBED WITH SIDEWALK

N.T.S.

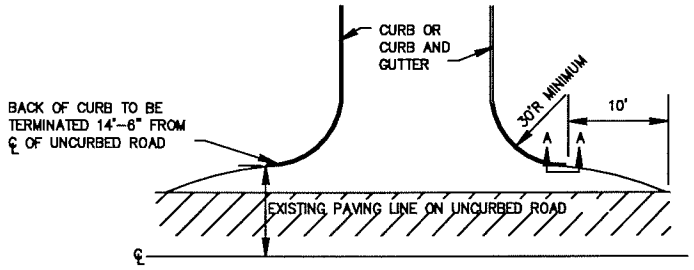

NOTE:
IF EXISTING UNCURBED ROAD IS WIDER THAN 29', THE DIMENSION IS TO BE 6'-6" FROM EXISTING EDGE OF PAVEMENT.

INTERSECTION OF CURBED AND UNCURBED ROADS

WITH NO TURN LANES
N.T.S.

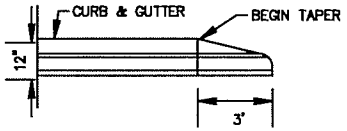

SECTION A–A

N.T.S.

FULTON COUNTY STANDARD DETAIL 306 MISCELLANEOUS DETAILS		DATE	REVISIONS	DATE	REVISIONS	DGS/DRN/CHKD: KAH APPROVED: L.M DATE: 4-19-05	FULTON COUNTY	FULTON COUNTY PUBLIC WORKS 141 PRYOR ST. ATLANTA, GA. 30303 404-730-7400 FAX: 404-730-8325	DRAWING NO. 306

DRIVEWAY/INTERSECTION USE	WIDTH IN FEET		MIN. RADIUS IN FEET
	MIN.	MAX.	
RESIDENTIAL DRIVEWAY (1–3 UNITS)	14	18	5' (RADIUS OR FLARE)
RESIDENTIAL STREET (TWO LANES)	20	25	30'
COMMERCIAL DRIVEWAY	24	30	35'
WHEN DESIGNED FOR TRUCKS	24	40	75'
TWO–LANE DIVIDED DRIVEWAY	SEE DETAIL 305		30'
FOUR–LANE DIVIDED DRIVE	SEE DETAIL 305		30'

CONCRETE DRIVES:

RESIDENTIAL	COMMERCIAL
6" CONCRETE VALLEY GUTTER	8" CONCRETE VALLEY GUTTER
4" CONCRETE DRIVEWAY	8" CONCRETE DRIVEWAY

NOTE: PUBLIC STREET INTERSECTIONS SHALL BE ASPHALT

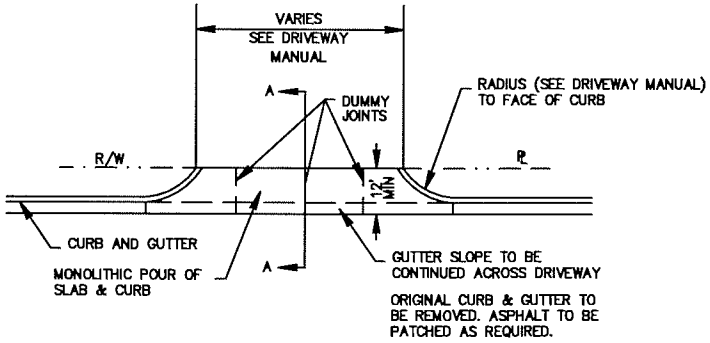

COMMERCIAL DRIVEWAY PLAN VIEW

N.T.S.

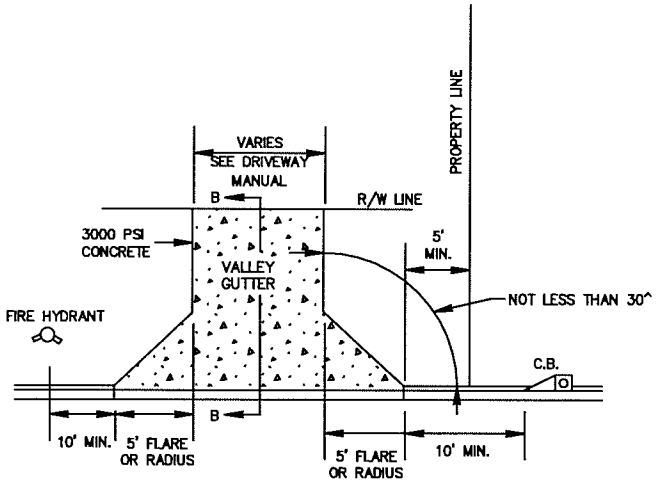

RESIDENTIAL DRIVEWAY (1–3 UNITS)

N.T.S.

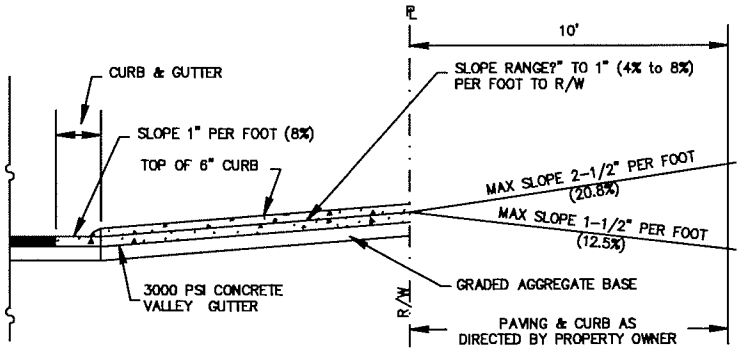

SECTION A–A

N.T.S.

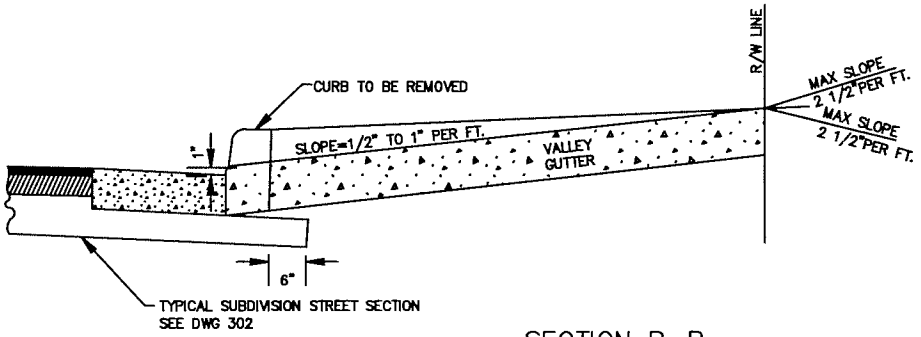

SECTION B–B

N.T.S.

FULTON COUNTY STANDARD DETAIL 304 DRIVEWAYS		DATE	REVISIONS	DATE	REVISIONS	DGS/DRN/CHKD: KAH APPROVED: LJM DATE: 4-19-05	FULTON COUNTY	FULTON COUNTY PUBLIC WORKS 141 PRYOR ST. ATLANTA, GA. 30303 404-730-7400 FAX: 404-730-6325	DRAWING NO. 304

DRIVEWAY/INTERSECTION USE	WIDTH IN FEET		MIN. RADIUS IN FEET
	MIN.	MAX.	
RESIDENTIAL DRIVEWAY (1–3 UNITS)	14	18	5' (RADIUS OR FLARE)
RESIDENTIAL STREET (TWO LANES)	20	25	30'
COMMERCIAL DRIVEWAY	24	30	35'
WHEN DESIGNED FOR TRUCKS	24	40	75'
TWO–LANE DIVIDED DRIVEWAY	SEE DETAIL 305		30'
FOUR–LANE DIVIDED DRIVE	SEE DETAIL 305		30'

CONCRETE DRIVES:

RESIDENTIAL	COMMERCIAL
6" CONCRETE VALLEY GUTTER	8" CONCRETE VALLEY GUTTER
4" CONCRETE DRIVEWAY	8" CONCRETE DRIVEWAY

NOTES:

1. PUBLIC STREET INTERSECTIONS SHALL BE ASPHALT
2. ALL STRIPING MUST BE DONE IN THERMOPLASTIC PER GDOT SPECIFICATION SECTION 653

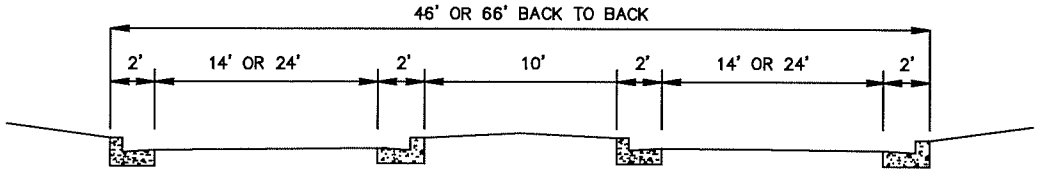

SECTION A–A

N.T.S.

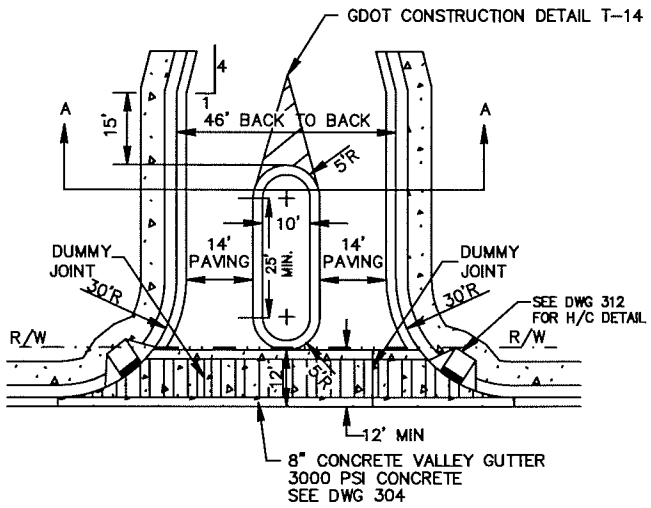

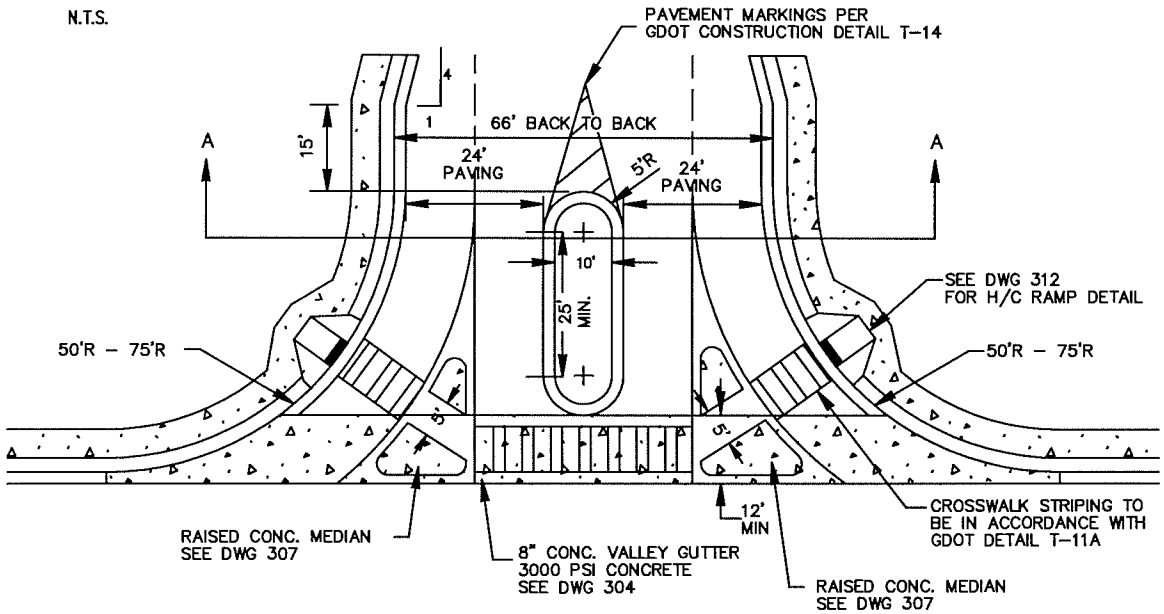

OPTIONAL DIVIDED ENTRANCE (PRIVATE OR COMMERCIAL)

N.T.S.

FULTON COUNTY STANDARD DETAIL 305
DIVIDED ENTRANCE DETAILS

DATE	REVISIONS	DATE	REVISIONS

DGS/DRN/CHKD: KAH
APPROVED: LJM
DATE: 4–19–05

FULTON COUNTY

FULTON COUNTY PUBLIC WORKS
141 PRYOR ST. ATLANTA, GA. 30303
404–730–7400 FAX: 404–730–6325

DRAWING NO. 305

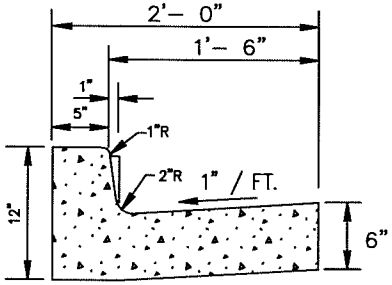

TYPE 1 CONCRETE CURB & GUTTER
INDUSTRIAL ROAD
N.T.S.

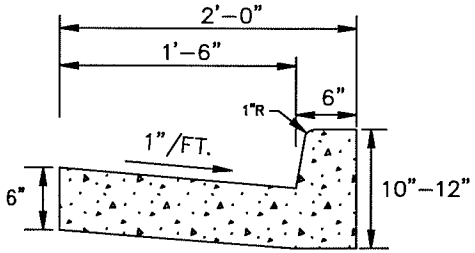

TYPE 2 CONCRETE CURB & GUTTER
MAJOR & MINOR RESIDENTIAL S.D STREETS ONLY
N.T.S.

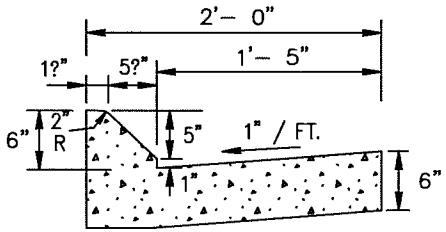

TYPE 3 MOUNTABLE CURB & GUTTER
N.T.S.

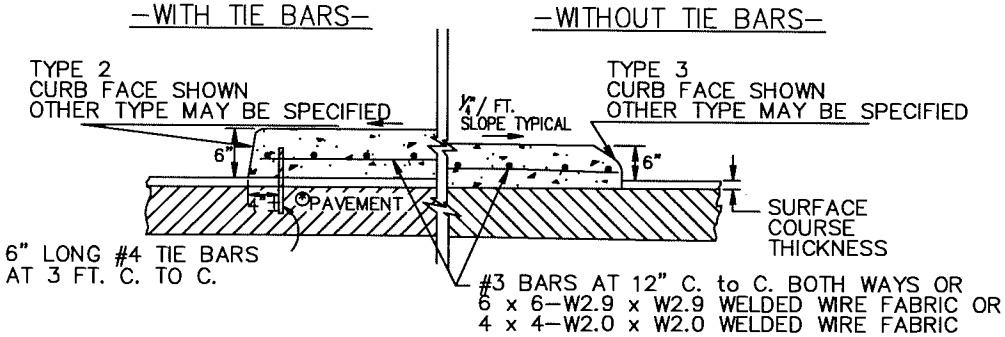

NOTE: IF CONCRETE MEDIAN INTERCEPTS PEDESTRIAN CROSSWALKS, WHEELCHAIR RAMPS (DWG 312) WILL BE REQUIRED.

* P. C. PAVEMENT
  TIE BARS WILL BE PLACED AFTER FINISHING & BEFORE INITIAL SET HAS TAKE PLACE.
* ASPHALT PAVEMENT
  TIE BARS MAY BE DRIVEN IN OR DRILLED & GROUTED.

CONCRETE MEDIANS (ISLAND)
N.T.S.

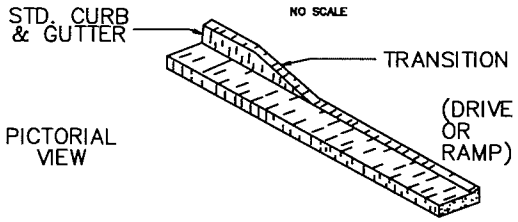

NOTE: CURB & GUTTER WILL BE MEASURED FOR PAYMENT THRU THE DRIVE OR RAMP OPENING

DETAILS OF RECESSED CURB
TYPICAL USE: AT DRIVEWAYS OR CURB CUT RAMPS
N.T.S.

FULTON COUNTY STANDARD DETAIL 307
CURB & GUTTER
DETAILS

DATE	REVISIONS	DATE	REVISIONS

DGS/DRN/CHKD: KAH
APPROVED: LJM
DATE: 4-19-05

FULTON COUNTY

FULTON COUNTY PUBLIC WORKS
141 PRYOR ST. ATLANTA, GA. 30303
404–730–7400 FAX: 404–730–6325

DRAWING NO. 307

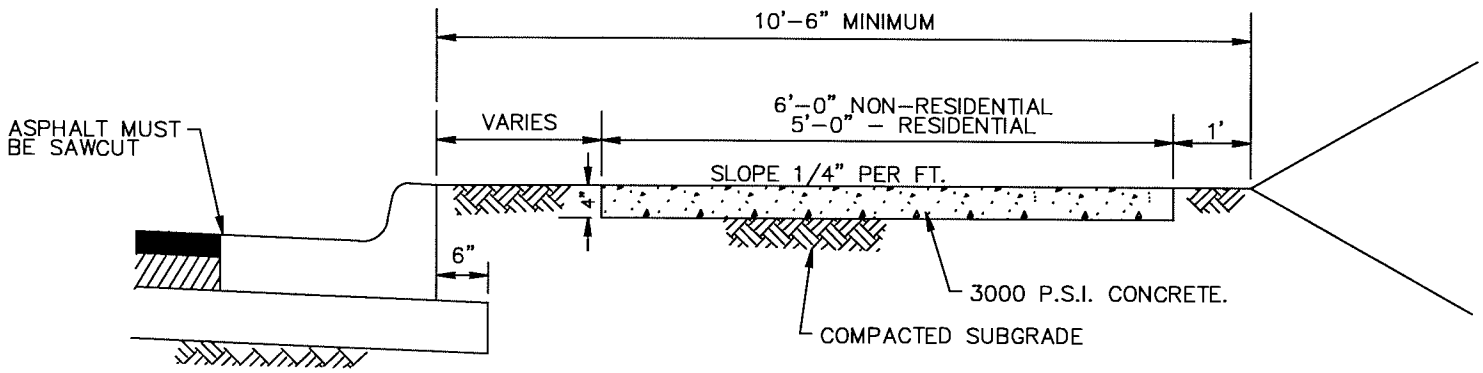

TYPICAL SECTION OF SIDEWALK

N.T.S.

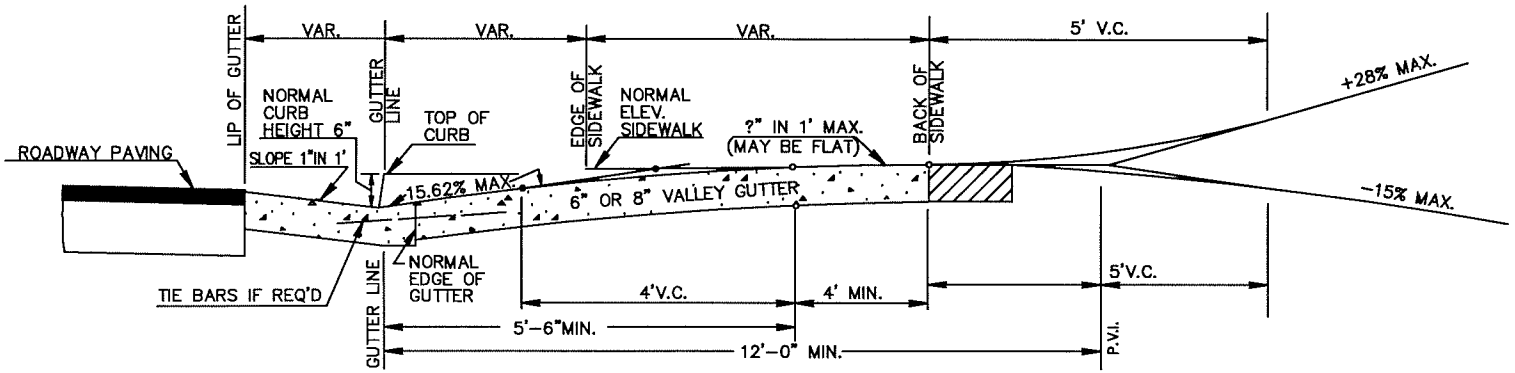

SECTION AT ℄ OF DRIVEWAY

NOTES:

1. USE ⅜" X 4" EXPANSION JOINTS AT CHANGE OF DIRECTIONS, CURBS, RIGID STRUCTURES AND RIGID PAVEMENT. ON STRAIGHT RUNS PROVIDE EXPANSION JOINTS EVERY 24 FEET.
2. TOOL ALL EXPOSED EDGES AND JOINTS TO ¼ " RADIUS.
3. BROOM FINISH ACROSS DIRECTION OF TRAVEL.
4. PROVIDE ¾" DEEP SAW CUT CONTRACTION JOINTS EVERY 5'-0".
5. ZONING OVERLAY REQUIREMENTS MAY SUPERCEDE STANDARD DETAIL.

FULTON COUNTY STANDARD DETAIL 308 STANDARD SIDEWALK SECTION		DATE	REVISIONS	DATE	REVISIONS	DGS/DRN/CHKD: KAH APPROVED: LJM DATE: 4-19-05	FULTON COUNTY FULTON COUNTY PUBLIC WORKS 141 PRYOR ST. ATLANTA, GA. 30303 404-730-7400 FAX: 404-730-6325	DRAWING NO. 308

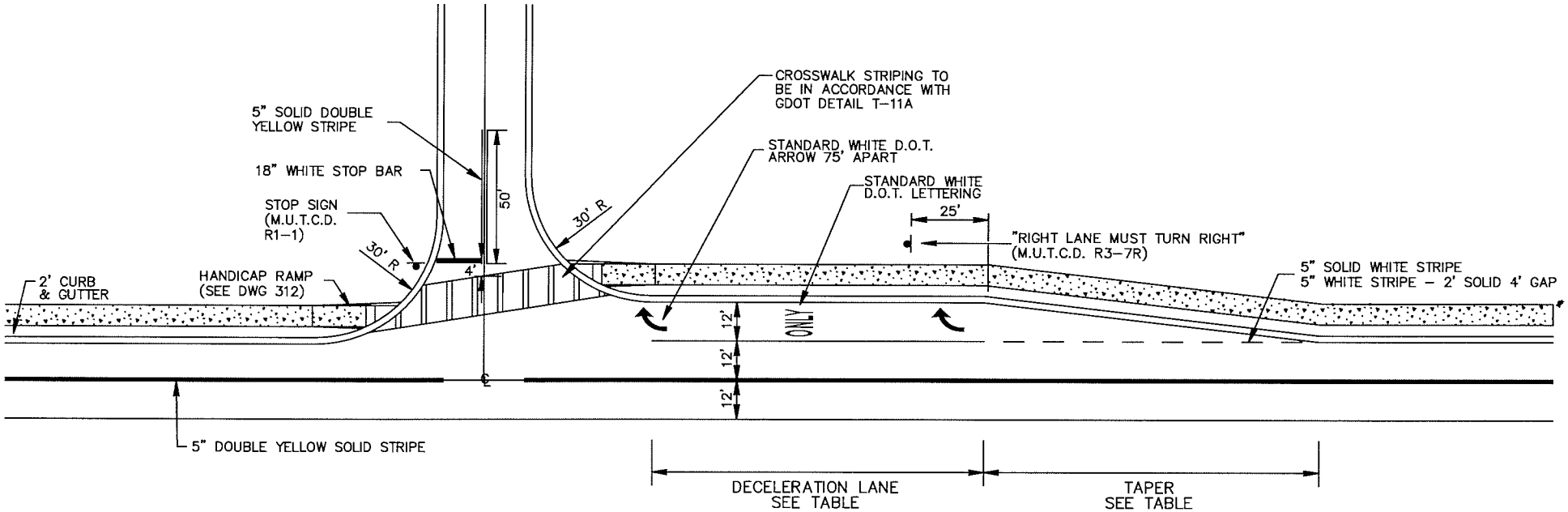

SPEED LIMIT MPH	DECELERATION LANE	TAPER
35	100	50
40	150	50
45	175	100
50	225	100
55	250	100

NOTES:

1. ALL STRIPING MUST BE DONE IN THERMOPLASTIC PER GDOT SPECIFICATION SECTION 653
2. CONTACT E&CD TRAFFIC INSPECTOR PRIOR TO ANY CONSTRUCTION AND 1 WEEK PRIOR TO STRIPING FOR INSPECTION OF LAYOUT..
3. STRIPING LAYOUT IS SUBJECT TO FIELD MODIFICATION PER THE FIELD INSPECTION.

FULTON COUNTY STANDARD DETAIL 309
TYPICAL SECTION TWO LANE ROAD
DECELERATION LANE

DATE	REVISIONS	DATE	REVISIONS

DGS/DRN/CHKD: KAH
APPROVED: LJM
DATE: 4-19-05

FULTON COUNTY

FULTON COUNTY PUBLIC WORKS
141 PRYOR ST. ATLANTA, GA. 30303
404-730-7400 FAX: 404-730-6325

DRAWING NO. 309

POSTED SPEED LIMIT, MPH	APPROACH TAPER 6' SHIFT	BAY TAPER	STORAGE LANE
35	125	50	95–190
40	160	50	95–190
45	270	100	95–210
50	300	100	95–210
55	330	100	95–210

NOTES:

1. LEFT STORAGE TURN LANE LENGTH TO BE IN ACCORDANCE WITH TABLE 14 OF THE FULTON COUNTY DRIVEWAY MANUAL.
2. ALL STRIPING MUST BE DONE IN THERMOPLASTIC PER GDOT SPECIFICATION SECTION 653
3. CONTACT E&CD TRAFFIC INSPECTOR PRIOR TO ANY CONSTRUCTION AND 1 WEEK PRIOR FOR INSPECTION OF LAYOUT.
4. STRIPING LAYOUT IS SUBJECT TO FIELD MODIFICATION PER THE FIELD INSPECTION.

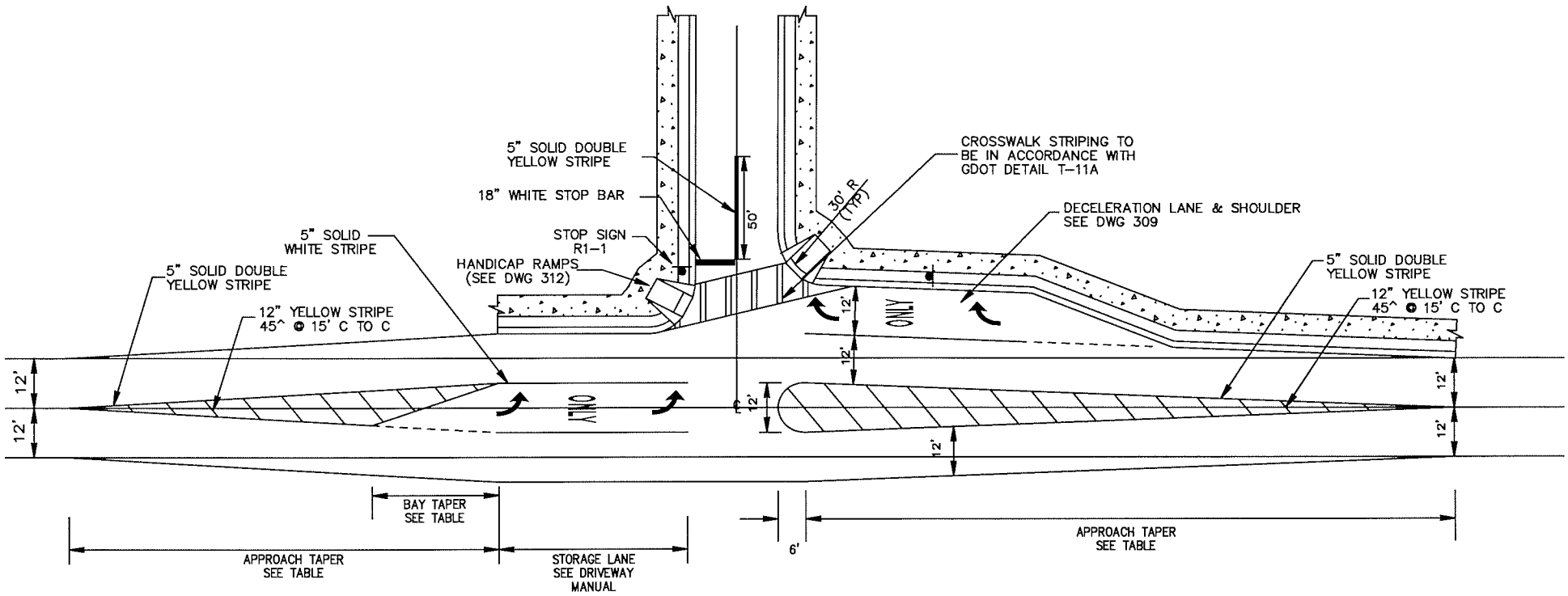

FULTON COUNTY STANDARD DETAIL 310
LEFT TURN LANE
WITH WIDING ON BOTH SIDES

DATE	REVISIONS	DATE	REVISIONS

DGS/DRN/CHKD: KAH
APPROVED: LJM
DATE: 4-19-05

FULTON COUNTY

FULTON COUNTY PUBLIC WORKS
141 PRYOR ST. ATLANTA, GA. 30303
404-730-7400 FAX: 404-730-6325

DRAWING NO. 310

POSTED SPEED LIMIT, MPH	APPROACH TAPER 12' SHIFT	BAY TAPER	STORAGE LANE
35	250	50	95–190
40	320	50	95–190
45	540	100	95–210
50	600	100	95–210
55	660	100	95–210

NOTES:

1. LEFT STORAGE TURN LANE LENGTH TO BE IN ACCORDANCE WITH TABLE 14 OF THE FULTON COUNTY DRIVEWAY MANUAL.
2. ALL STRIPING MUST BE DONE IN THERMOPLASTIC PER GDOT SPECIFICATION SECTION 653
3. CONTACT E&CD TRAFFIC INSPECTOR PRIOR TO ANY CONSTRUCTION AND 1 WEEK PRIOR TO STRIPING FOR INSPECTION OF LAYOUT.
4. STRIPING LAYOUT IS SUBJECT TO FIELD MODIFICATION PER THE FIELD INSPECTION.

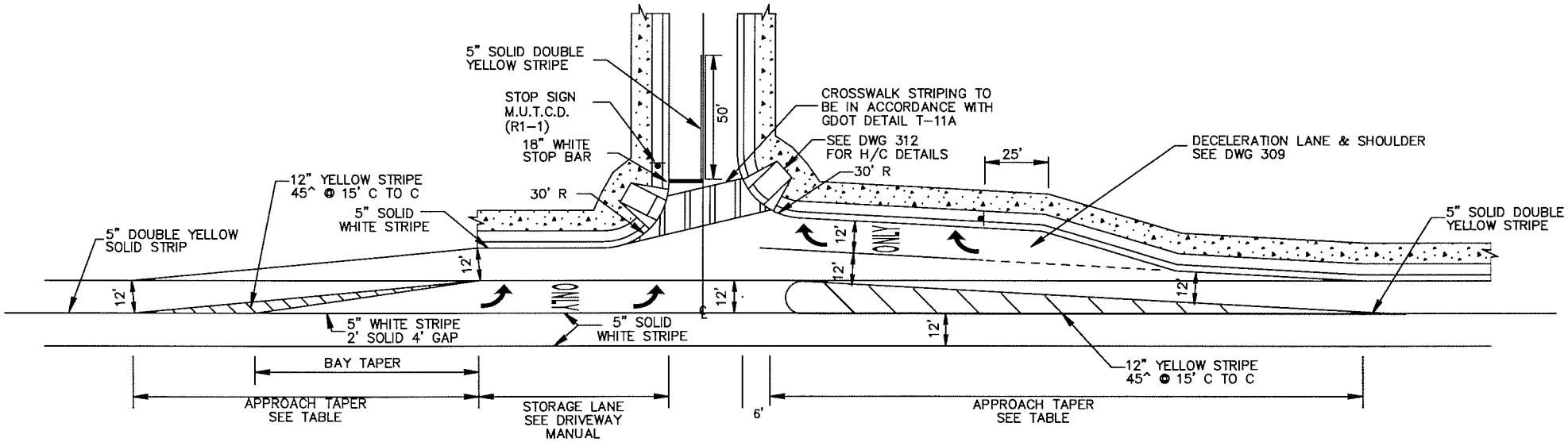

FULTON COUNTY STANDARD DETAIL 311 LEFT TURN LANE WITH WIDING ON ONE SIDE		DATE	REVISIONS	DATE	REVISIONS	DGS/DRN/CHKD: KAH APPROVED: LJM DATE: 4–19–05	FULTON COUNTY	FULTON COUNTY PUBLIC WORKS 141 PRYOR ST. ATLANTA, GA. 30303 404–730–7400 FAX: 404–730–6325	DRAWING NO. 311

TYPICAL LOCATIONS FOR CURB CUT RAMPS – PLAN VIEW

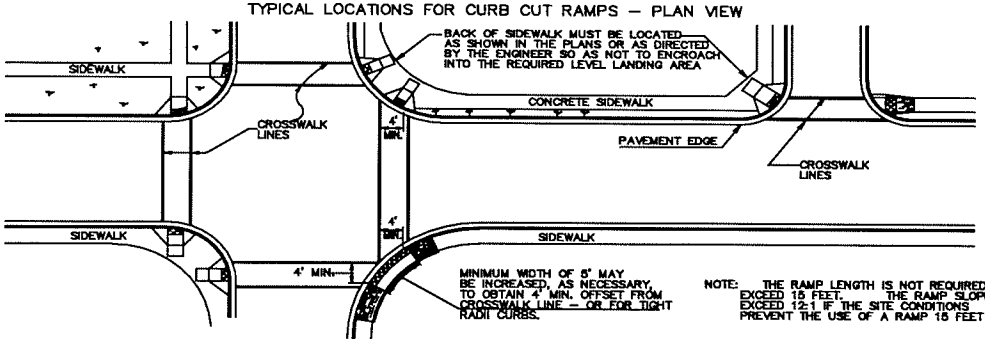

NOTE: THE RAMP LENGTH IS NOT REQUIRED TO EXCEED 15 FEET. THE RAMP SLOPE MAY EXCEED 12:1 IF THE SITE CONDITIONS PREVENT THE USE OF A RAMP 15 FEET LONG.

Type A

(The Prefered Ramp)

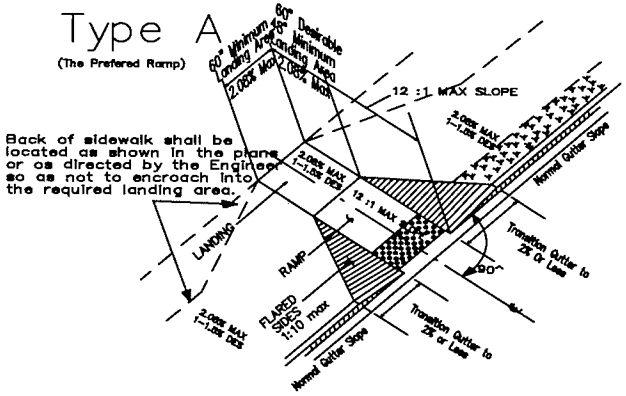

Type B

(Normally used when space is not available for a landing at the top of a Type A Ramp)

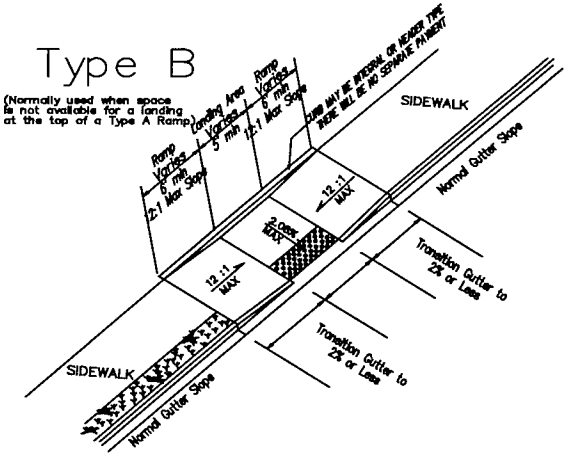

Type D

(Normally used when the sidewalk ties directly into the crosswalk)

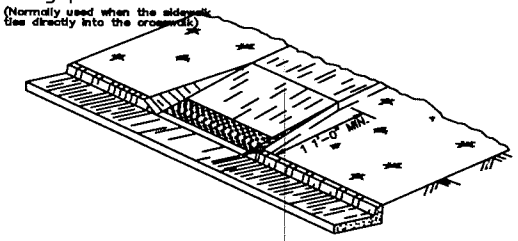

IN AREAS WHERE THE GUTTER HAS A SLOPE 1" IN 1" END NORMAL GUTTER SLOPE AT A DISTANCE OF 6 TO 10 FEET FROM THE RAMP AND BEGIN TRANSITION TO A FLAT GUTTER SLOPE. NORMAL GUTTER SLOPE SHALL BE RESUMED AT A SIMILAR DISTANCE BEYOND THE RAMP.

Type C

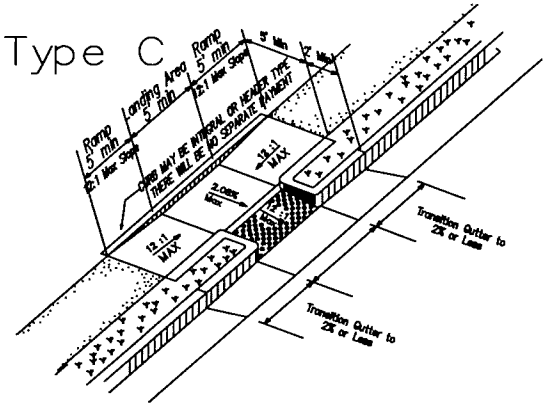

Skewed Ramp Details

(Applies to Type A & Type D Ramps Only)

WHEN THE RAMP CENTERLINE IS NOT PERPENDICULAR TO THE CURB A LEVEL LANDING AREA WITH SLOPES LESS THAN 2.08% MUST BE PROVIDED AT THE BOTTOM OF THE RAMP.

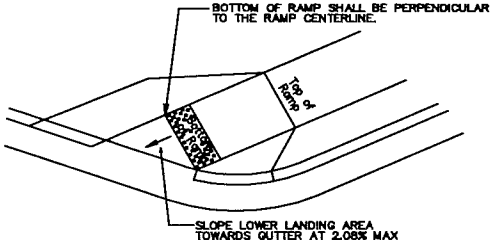

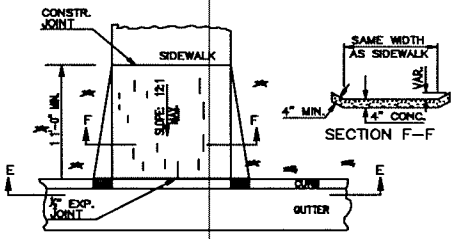

FULTON COUNTY STANDARD DETAIL 312 HANDICAP RAMP DETAILS		DATE	REVISIONS	DATE	REVISIONS	DGS/DRN/CHKD: KAH APPROVED: LJM DATE: 4-19-05	FULTON COUNTY FULTON COUNTY PUBLIC WORKS 141 PRYOR ST. ATLANTA, GA. 30303 404-730-7400 FAX: 404-730-6325	DRAWING NO. 312

	18' ROAD WIDTH	20' ROAD WIDTH	25' EXIST. ROAD WIDTH
A	9'	10'	12.5'
B	12.15'	12.56'	14.10'
C	26' D	28' D	32' D

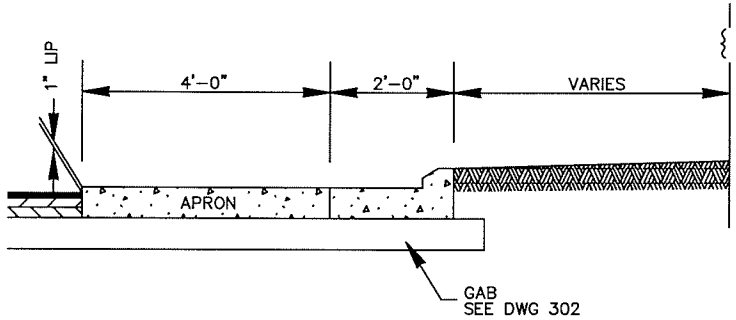

HALF SECTION A-A

N.T.S.

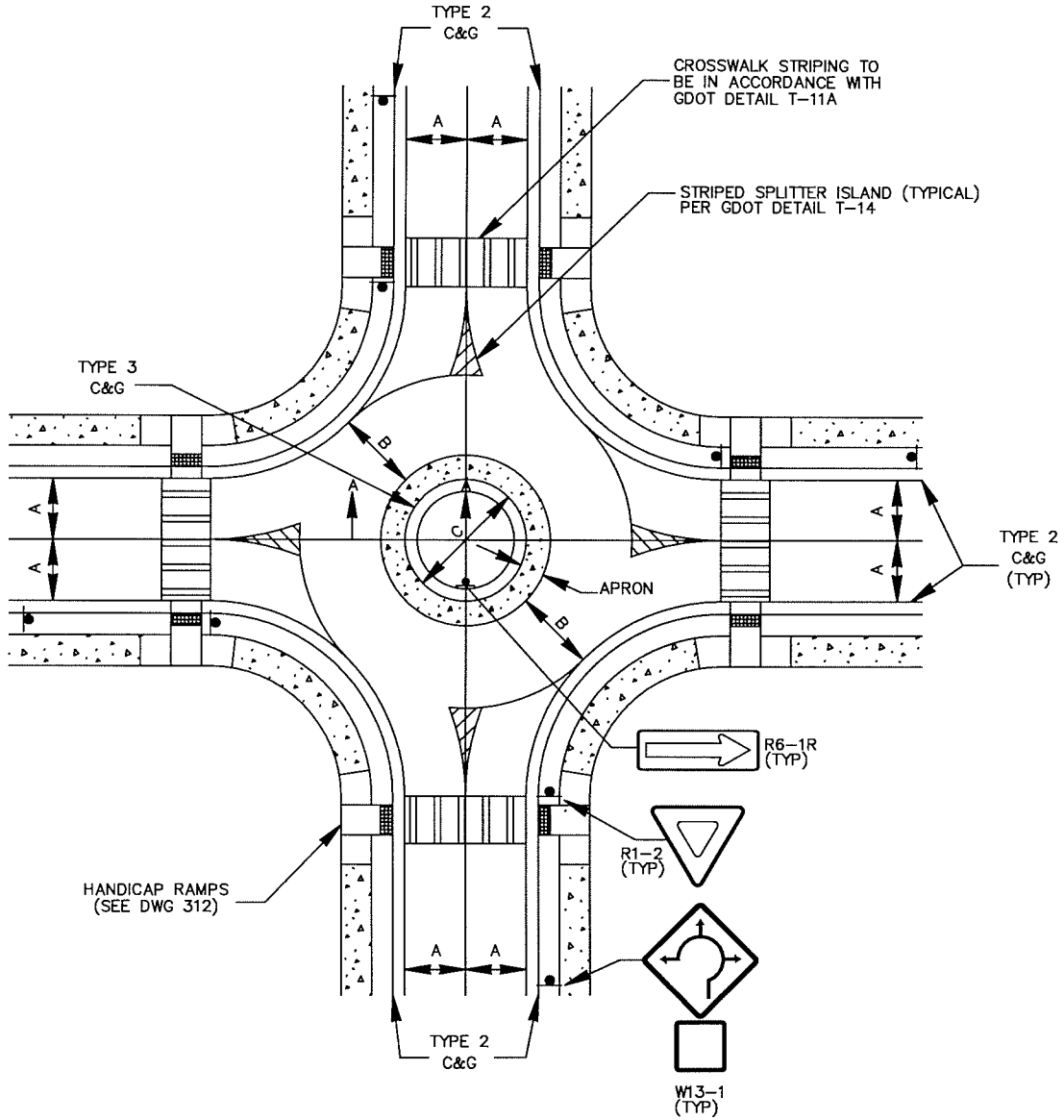

NOTES:

1. APRON TO BE 4 FOOT WIDE, 6" THICK 3000 PSI CONCRETE PAVEMENT.
2. ALL STRIPING MUST BE DONE IN THERMOPLASTIC PER GDOT SPECIFICATION SECTION 653.
3. CONTACT E&CD TRAFFIC INSPECTOR PRIOR TO ANY CONSTRUCTION AND 1 WEEK PRIOR TO STRIPING FOR INSPECTION OF LAYOUT.
4. STRIPING LAYOUT IS SUBJECT TO FIELD MODIFICATION PER THE FIELD INSPECTION.

FULTON COUNTY STANDARD DETAIL 313
MINI ROUNDABOUT

DATE	REVISIONS	DATE	REVISIONS

DGS/DRN/CHKD: KAH
APPROVED: LJM
DATE: 4-19-05

FULTON COUNTY

FULTON COUNTY PUBLIC WORKS
141 PRYOR ST. ATLANTA, GA. 30303
404-730-7400 FAX: 404-730-6325

DRAWING NO.
313

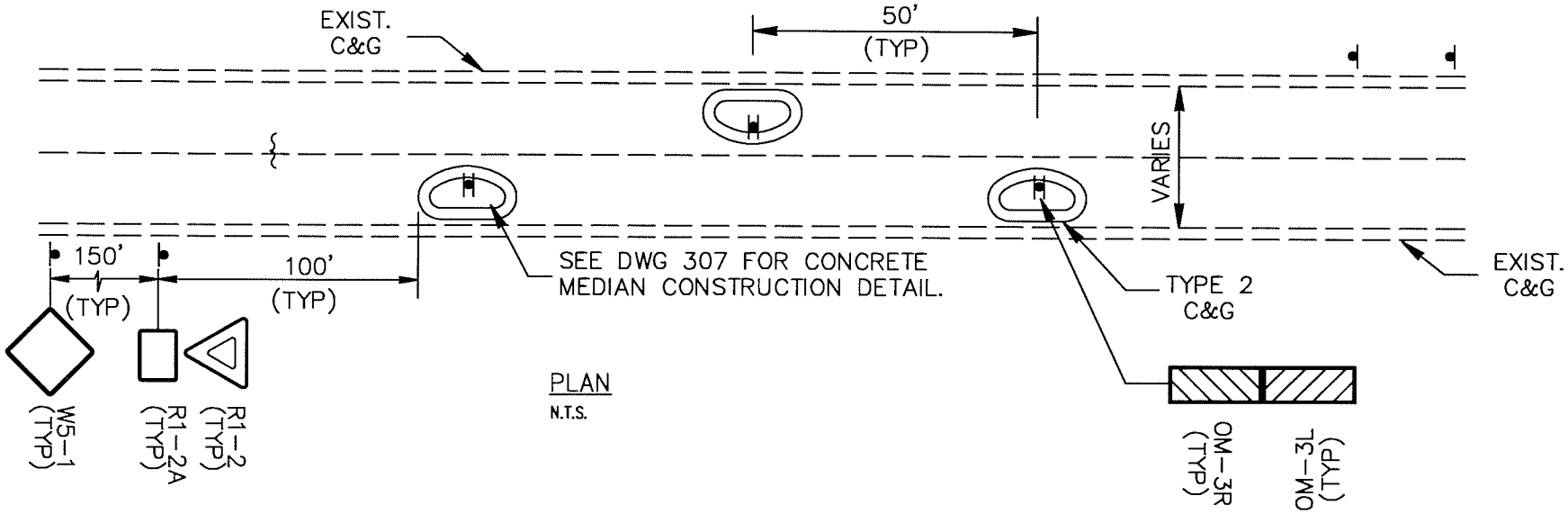

PLAN
N.T.S.

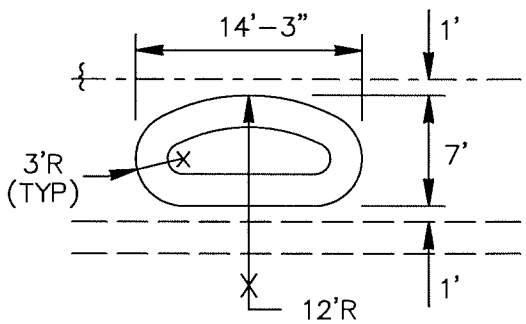

EXIST. 18' ROAD WIDTH
N.T.S.

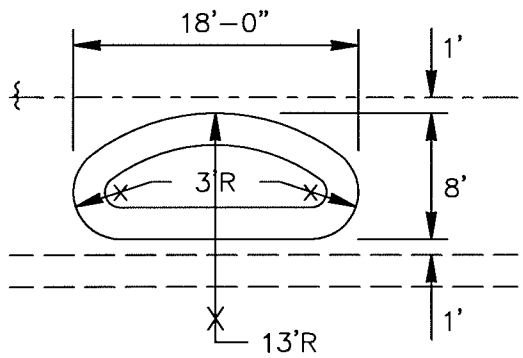

EXIST. 20' ROAD WIDTH
N.T.S.

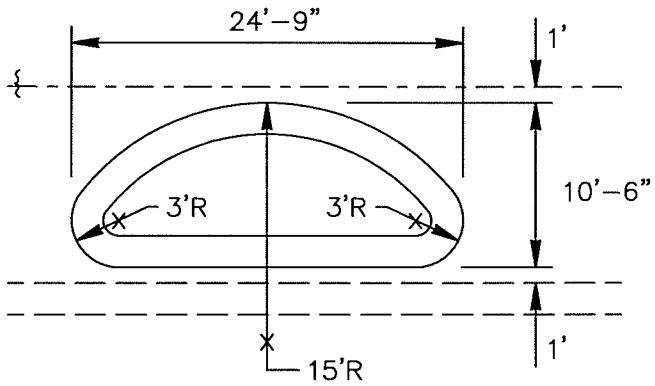

EXIST. 25' ROAD WIDTH
N.T.S.

FULTON COUNTY STANDARD DETAIL 314
CHICANES

DATE	REVISIONS	DATE	REVISIONS

DGS/DRN/CHKD: KAH
APPROVED: LJM
DATE: 4-19-05

FULTON COUNTY

FULTON COUNTY PUBLIC WORKS
141 PRYOR ST. ATLANTA, GA. 30303
404-730-7400 FAX: 404-730-6325

DRAWING NO. 314

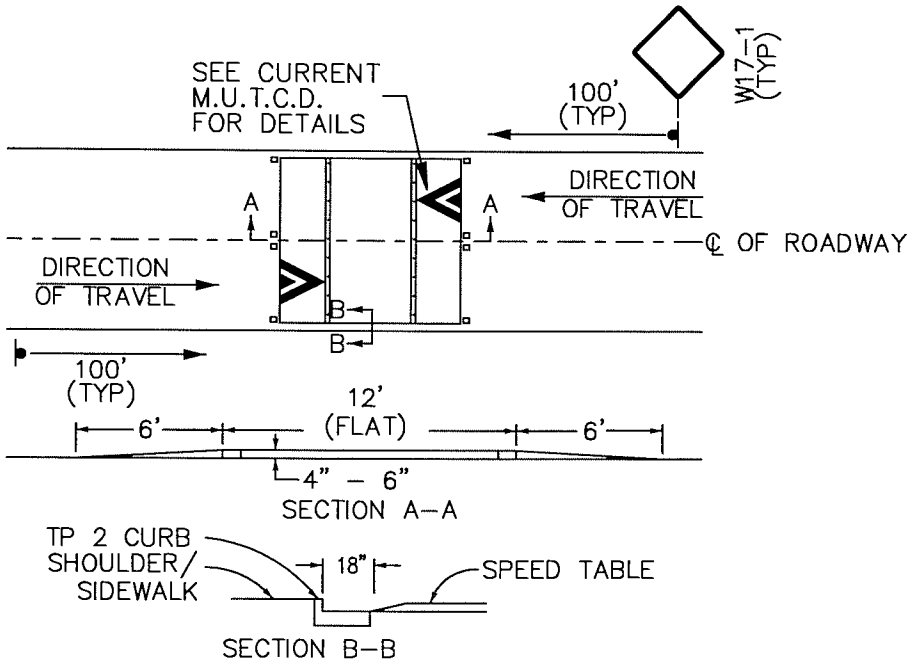

TYPE 1 SPEED TABLE DETAIL

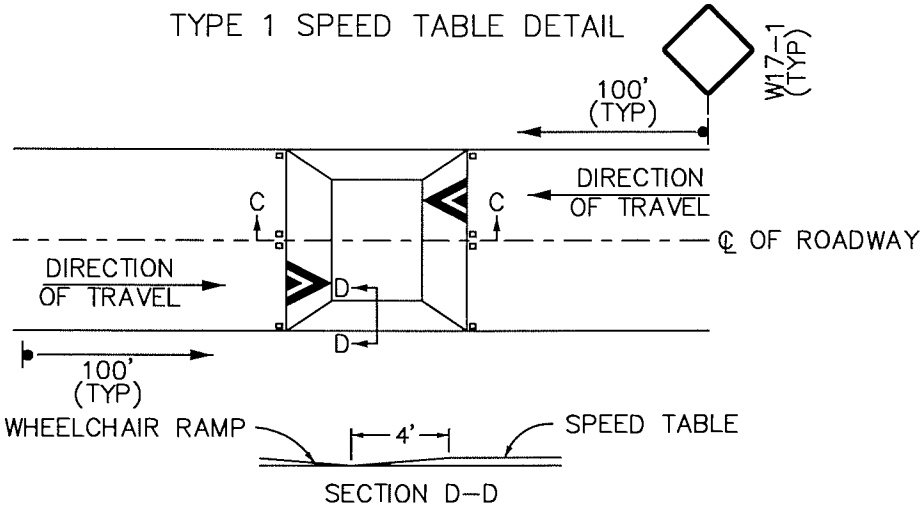

TYPE 2 SPEED TABLE DETAIL

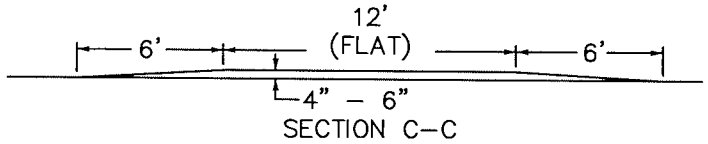

NOTES:

1. USE TYPE 2 SPEED TABLES IN CONJUNCTION WITH CROSSWALKS, ONLY.

2. SPEED TABLES MAY BE CONSTRUCTED USING ASPHALT OR CONCRETE, PER FULTON COUNTY TRAFFIC ENGINEER.

A. CONCRETE CONSTRUCTION:
   1. CONSTRUCT SPEED TABLES USING 3000 PSI HIGH/EARLY CONCRETE REINFORCED WITH #3 BARS AT 12" C. TO C. BOTH WAYS, OR 6 X 6–W2.9 X W2.9 WELDED WIRE FABRIC, OR 4 X 4–W2.0 X W2.0 WELDED WIRE FABRIC.

   2. CONCRETE WILL BE COLORED AND TOP STAMPED WITH TEXTURE PER FULTON COUNTY TRAFFIC ENGINEER

B. ASPHALT CONSTRUCTION:
   1. CONSTRUCT SPEED TABLES USING ASPHALTIC CONCRETE 12.5 MM SUPERPAVE IN ACCORDANCE WITH SECTION 402 OF THE GEORGIA DOT STANDARD SPECIFICATIONS, CURRENT EDITION.

   2. APPLY TACK COAT AT A RATE OF 0.04 TO 0.06 GALLONS PER SQUARE YARD IN ACCORDANCE WITH SECTION 413 OF THE GEORGIA DOT STANDARD SPECIFICATIONS, CURRENT EDITION, OR AS DIRECTED BY ENGINEER.

3. APPLY PAVEMENT MARKINGS USING WHITE THERMOPLASTIC 0.090 INCHES IN THICKNESS IN ACCORDANCE WITH SECTION 653 OF THE GEORGIA DOT STANDARD SPECIFICATIONS, CURRENT EDITION.

A. APPLY RAISED PAVEMENT MARKERS, TP 11 (YELLOW/YELLOW) (CENTERLINE) AND TP 13 (CLEAR/RED) (EDGE OF PAVEMENT), USING HEATED BITUMINOUS ADHESIVE IN ACCORDANCE WITH SECTION 868 OF THE OF THE GEORGIA DOT SPECIAL SHELF PROVISION SPECIFICATIONS, CURRENT EDITION.

FULTON COUNTY STANDARD DETAIL 315 SPEED TABLE		DATE	REVISIONS	DATE	REVISIONS	DGS/DRN/CHKD: KAH APPROVED: LJM DATE: 4-19-05	FULTON COUNTY FULTON COUNTY PUBLIC WORKS 141 PRYOR ST. ATLANTA, GA. 30303 404-730-7400 FAX: 404-730-6325	DRAWING NO. 315

NOTES:

1. MINIMUM 1" SLOPE REQUIRED IN ALL AREAS FOR DRAINAGE.

2. A 30" X 30" YELLOW WARNING SIGN WITH THE LEGEND "RAISED INTERSECTION" MAY BE REQUIRED ON ALL APPROACHES NOT CONTROLLED BY A STOP SIGN.

3. INTERSECTION HUMP MAY BE CONSTRUCTED USING ASPHALT OR CONCRETE, PER FULTON COUNTY TRAFFIC ENGINEER.

A. CONCRETE CONSTRUCTION:
   1. CONSTRUCT INTERSECTION HUMP USING 3000 PSI HIGH/EARLY CONCRETE REINFORCED WITH #3 BARS AT 12" C. TO C. BOTH WAYS, OR 6 X 6–W2.9 X W2.9 WELDED WIRE FABRIC, OR 4 X 4–W2.0 X W2.0 WELDED WIRE FABRIC.

   2. CONCRETE WILL BE COLORED AND TOP STAMPED WITH TEXTURE PER FULTON COUNTY TRAFFIC ENGINEER

B. ASPHALT CONSTRUCTION:
   1. CONSTRUCT INTERSECTION HUMP USING ASPHALTIC CONCRETE 12.5 MM SUPERPAVE IN ACCORDANCE WITH SECTION 402 OF THE GEORGIA DOT STANDARD SPECIFICATIONS, CURRENT EDITION.

   2. APPLY TACK COAT AT A RATE OF 0.04 TO 0.06 GALLONS PER SQUARE YARD IN ACCORDANCE WITH SECTION 413 OF THE GEORGIA DOT STANDARD SPECIFICATIONS, CURRENT EDITION, OR AS DIRECTED BY ENGINEER

3. APPLY PAVEMENT MARKINGS USING WHITE THERMOPLASTIC 0.090 INCHES IN THICKNESS IN ACCORDANCE WITH SECTION 653 OF THE GEORGIA DOT STANDARD SPECIFICATIONS, CURRENT EDITION.

A. APPLY RAISED PAVEMENT MARKERS, TP 11 (YELLOW/YELLOW) (CENTERLINE) AND TP 13 (CLEAR/RED) (EDGE OF PAVEMENT), USING HEATED BITUMINOUS ADHESIVE IN ACCORDANCE WITH SECTION 868 OF THE OF THE GEORGIA DOT SPECIAL SHELF PROVISION SPECIFICATIONS, CURRENT EDITION.

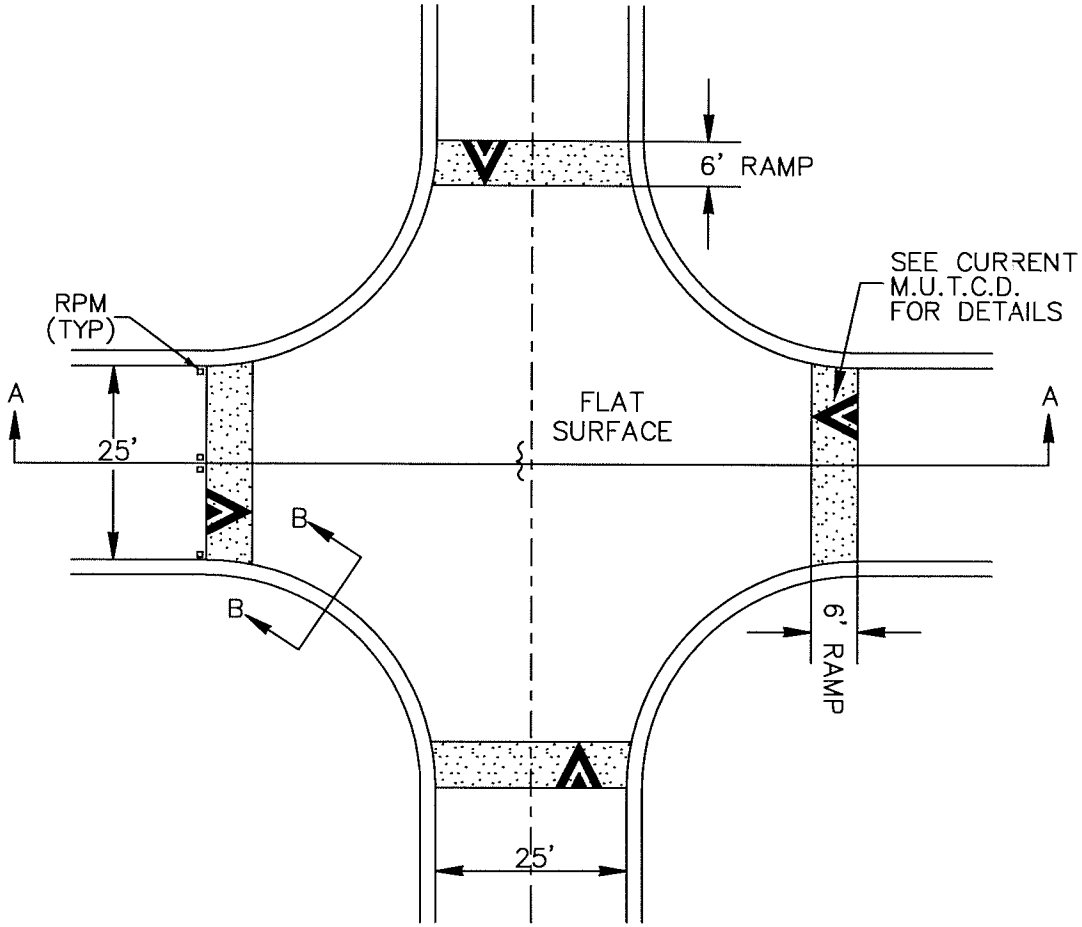

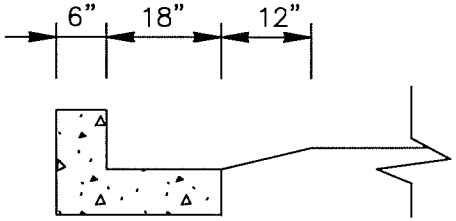

SECT. B–B

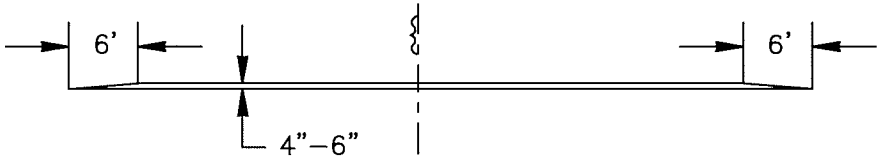

SECT. A–A

FULTON COUNTY STANDARD DETAIL 316 INTERSECTION HUMP	DATE	REVISIONS	DATE	REVISIONS	DGS/DRN/CHKD: KAH APPROVED: LJM DATE: 4–19–05	FULTON COUNTY	FULTON COUNTY PUBLIC WORKS 141 PRYOR ST. ATLANTA, GA. 30303 404–730–7400 FAX: 404–730–6325	DRAWING NO. 316

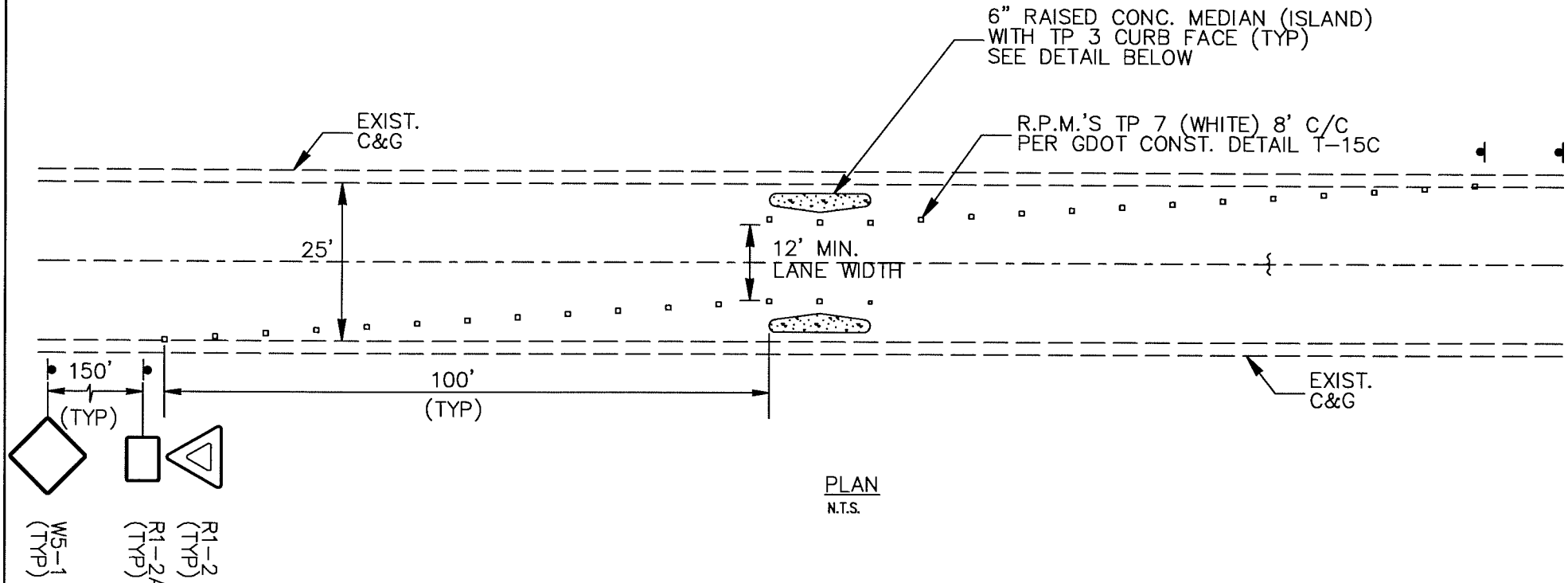

PLAN
N.T.S.

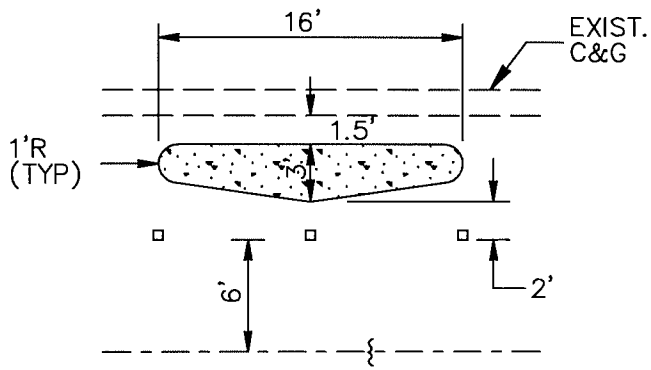

NOTE: SEE DWG 307 FOR CONCRETE MEDIAN CONSTRUCTION DETAIL.

CONC. ISLAND DETAIL
N.T.S.

FULTON COUNTY STANDARD DETAIL 317
ONE LANE CHOKER

DATE	REVISIONS	DATE	REVISIONS

DGS/DRN/CHKD: KAH
APPROVED: LJM
DATE: 4-19-05

FULTON COUNTY

FULTON COUNTY PUBLIC WORKS
141 PRYOR ST. ATLANTA, GA. 30303
404-730-7400 FAX: 404-730-6325

DRAWING NO. 317

NOTES:

1. CONSTRUCT ENTRANCE TREATMENT USING 3000 PSI HIGH/EARLY CONCRETE.
2. CONCRETE WILL BE COLORED AND STAMPED WITH TEXTURE PER FULTON COUNTY TRAFFIC ENGINEER.
3. TREATMENT WILL EXTEND FROM GUTTER TO GUTTER OR FACE OF CURB TO FACE OF CURB WHERE NO GUTTER EXISTS.
4. CONCRETE MAY BE FORMED 1 INCH ABOVE EXISTING GRADE WITH EDGE SLOPED TO GRADE OVER 1 INCH PER FULTON COUNTY TRAFFIC ENGINEER.
5. ALTERNATE PAVER MATERIAL (STONE, BRICK, CONCRETE, ETC.) MAY BE USED AS APPROVED BY FULTON COUNTY TRAFFIC ENGINEER. IF USED, APPLY FOLLOWING MODIFICATIONS:
   A. 18 INCH BAND OF 3000 PSI HIGH/EARLY CONCRETE POURED IN PLACE AT EXTENT OF TREATMENT.
   B. ALL PAVERS SET IN 1 INCH LEVELING SAND ON MINIMUM OF 4 INCH CONCRETE BASE.
6. FOR PRIVATE STREETS ONLY UNLESS APPROVED BY E&CD DIRECTOR.

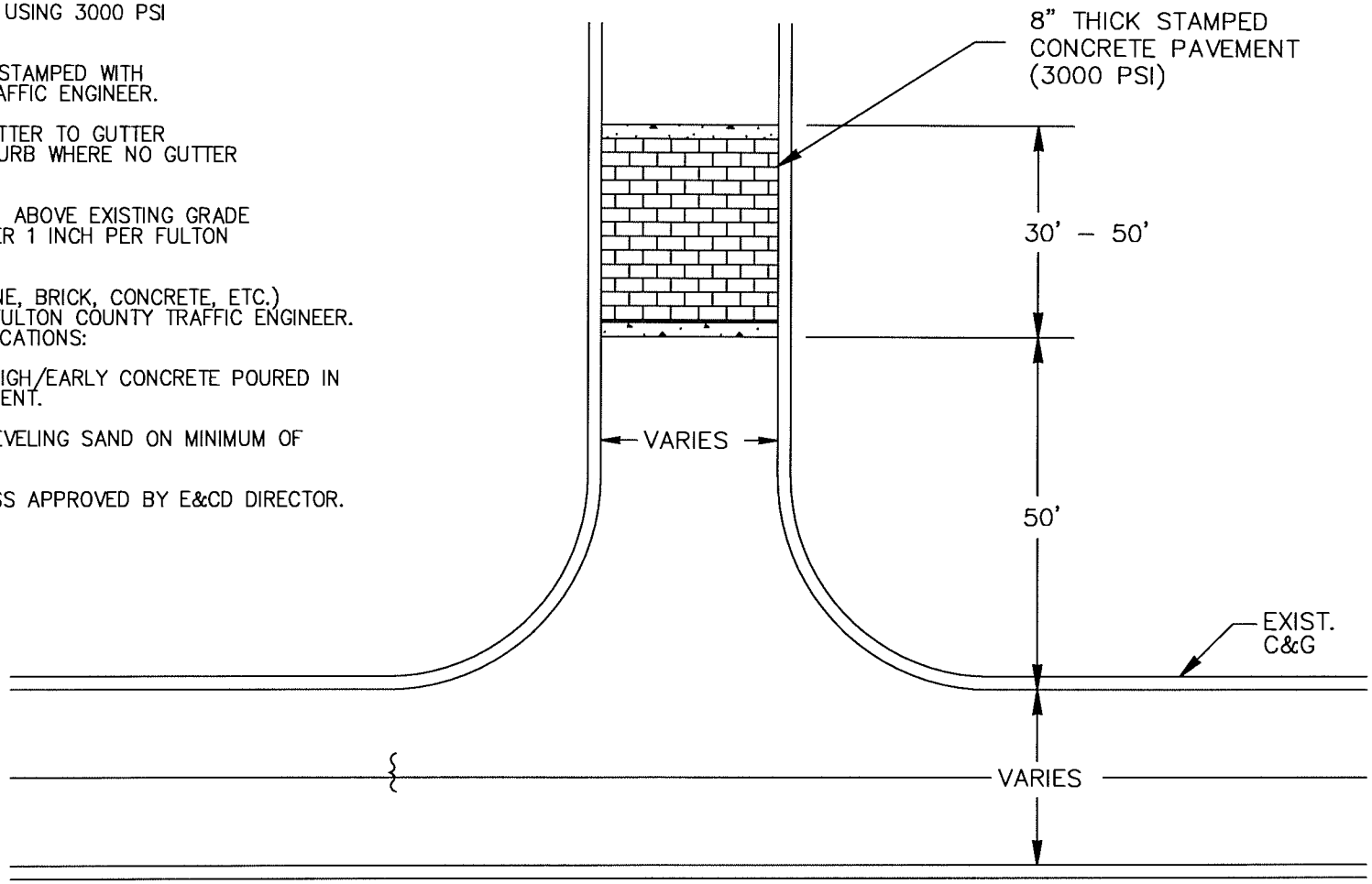

FULTON COUNTY STANDARD DETAIL 318 ENTRANCE TREATMENT		DATE	REVISIONS	DATE	REVISIONS	DGS/DRN/CHKD: KAH APPROVED: LJM DATE: 4-19-05	FULTON COUNTY	FULTON COUNTY PUBLIC WORKS 141 PRYOR ST. ATLANTA, GA. 30303 404-730-7400 FAX: 404-730-6325	DRAWING NO. 318

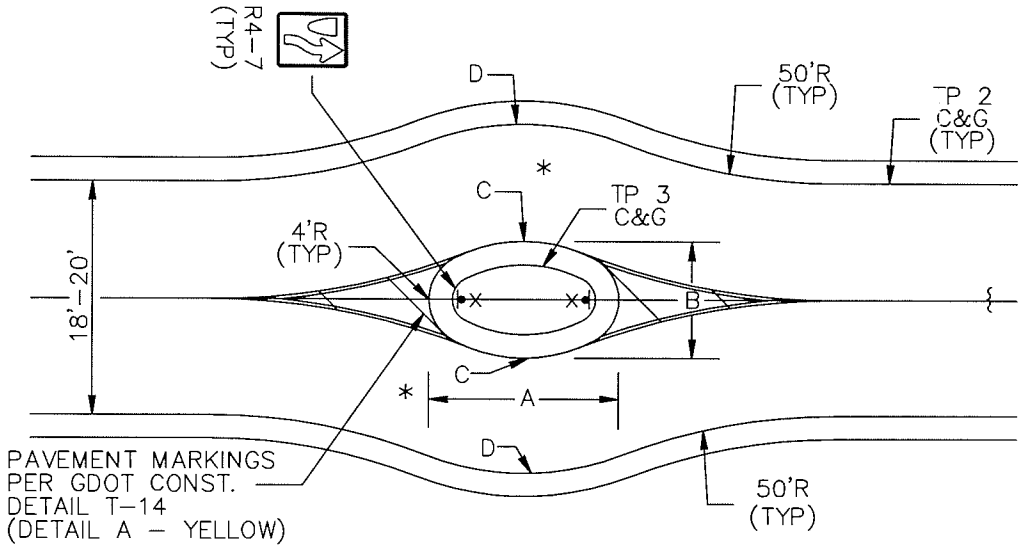

CENTER ISLAND 18-20' ROADWAY

N.T.S.

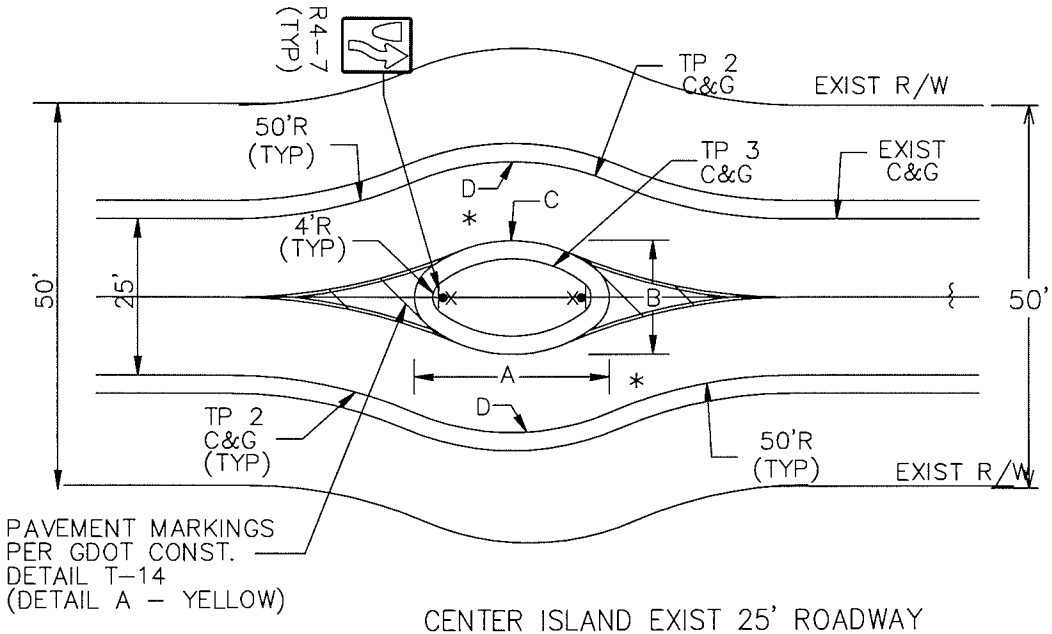

CENTER ISLAND EXIST 25' ROADWAY
WITHOUT SIDEWALK

N.T.S.

	18'	20'	25' EXIST.
A	13'7"	16'3"	21'4"
B	9'	10'	12'6"
C	12'R	13'R	15'R
D	21'R	23'R	27'6"R

NOTES:

1. ALL STRIPING MUST BE DONE IN THERMOPLASTIC PER GDOT SPECIFICATION SECTION 653.

2. 20' LANE WIDTH REQUIRED BY FIRE DEPARTMENT *

FULTON COUNTY STANDARD DETAIL 319
CENTER ISLAND

DATE	REVISIONS	DATE	REVISIONS

DGS/DRN/CHKD: CMS
APPROVED: NH
DATE: 6-2-06

FULTON COUNTY

FULTON COUNTY PUBLIC WORKS
141 PRYOR ST. ATLANTA, GA. 30303
404-730-7400 FAX: 404-730-6325

DRAWING NO.
319

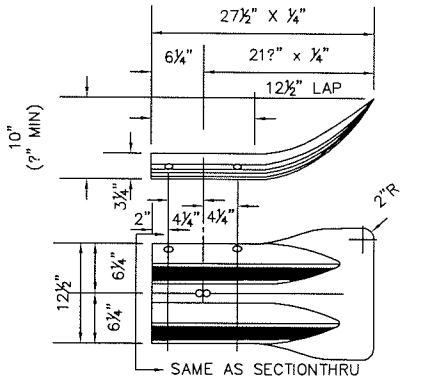

STANDARD TERMINAL SECTION
N.T.S.

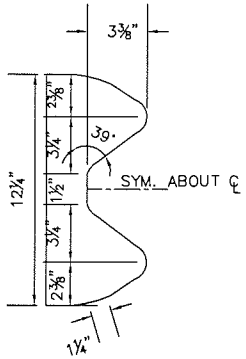

SECTION THRU RAIL ELEMENT
N.T.S.

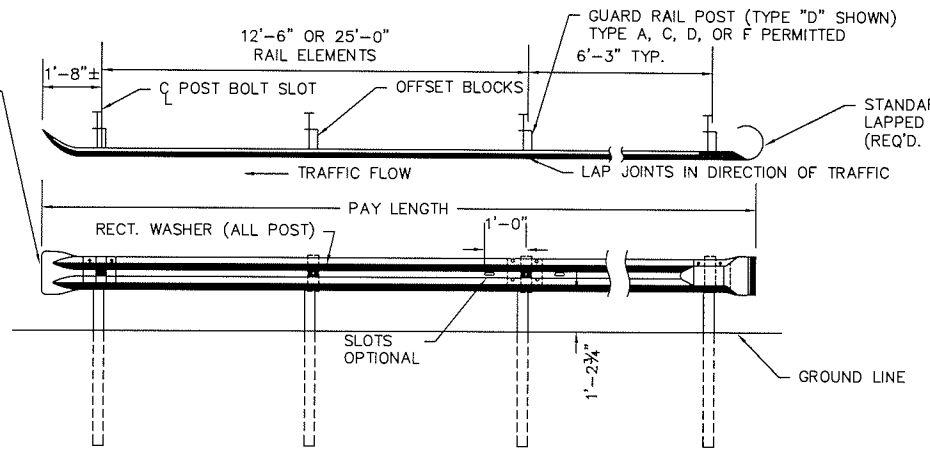

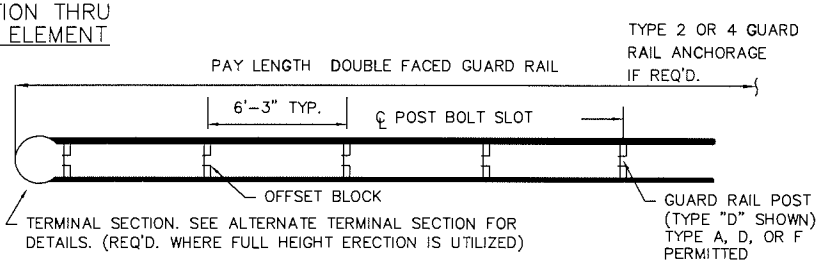

DOUBLE FACED GUARD RAIL
N.T.S.

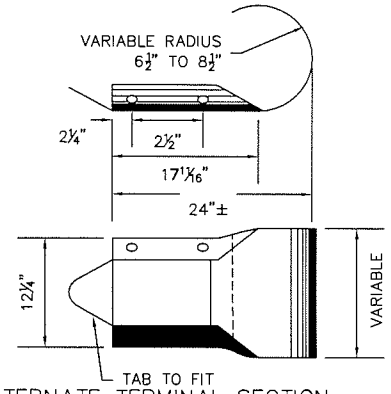

ALTERNATE TERMINAL SECTION
N.T.S.

TERMINAL SECTION FOR DOUBLE FACED GUARD RAIL SIMILAR RADIUS VARIABLE 12" TO 16" AND LENGTH VARIABLE.

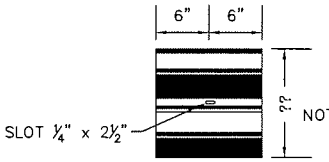

NOTE: CROSS SECTION OF PLATE SIMILAR TO GUARD RAIL SECTION.

BACK-UP PLATE
N.T.S.
(REQ'D. WITH STREET OFFSET BLOCKS WHERE RAIL SPLICE DOES NOT OCCUR. LOCATED BACK OF RAIL.)

GENERAL NOTES:

1. GUARD RAIL, ITS FITTINGS, PARTS, ETC, ARE TO BE IN ACCORDANCE WITH STATE HIGHWAY DEPARTMENT OF GEORGIA STANDARD SPECIFICATIONS AND/OR SPECIAL PROVISIONS.
2. FOR DETAILS OF POSTS & OFFSET BLOCKS SEE GA. STANDARD 4011.
3. FOR DETAILS OF GUARD RAIL ANCHORAGES SEE GEORGIA STANDARD 4012.
4. FOR LOCATION OF GUARD RAIL SEE APPLICABLE LOCATION STANDARDS.
5. ON PROJECTS WHERE GUARD RAIL CONNECTIONS AT BRIDGE END HAVE BEEN PLACED ON PREVIOUS CONTRACTS THE END PANEL MAY BE SHORTENED BY CUTTING OR SHEARING TO FIT EXISTING STRUCTURE.
6. WHEN GUARD RAIL IS REQUIRED ON CUVRES WITH RADII LESS THAN 150' PRECURVED RAIL WILL BE REQUIRED.
7. UNIT PRICE FOR GUARD RAIL TO INCLUDE OFFSET BLOCKS, POST, BACK-UP PLATES WHERE REQ'D, BOLTS, NUTS, WASHERS, TERMINAL SECTIONS, ADDITIONAL POST WHERE REQUIRED AND REMOVAL AND REPLACEMENT OF PORTIONS OF MEDIAN PAVING, SPILLWAYS OR CATCH BASINS WHERE NECESSARY.
8. ALL DIMENSIONS ARE SUBJECT TO MANUFACTURING TOLERANCES.
9. STANDARD NET LENGTH OF RAIL ELEMENTS MAY BE EITHER 12'-6" OR 25'-0". THESE LENGTHS SHALL BE ARRANGED TO PROVIDE AS NEARLY AS POSSIBLE THE OVERALL LENGTH ORDERED BY THE ENGINEER FOR ANY ONE LOCATION.

FULTON COUNTY STANDARD 320 BEAM TYPE GUARD RAIL	BY	REVISION	DATE	BY	REVISION	DATE	SCALE N.T.S.	DSG/DRN/CHKD: SEK APPROVED: REW DATE: 2/19/04	FULTON COUNTY PUBLIC WORKS 141 PRYOR ST. ATLANTA, GA. 30303 404-730-7400 FAX: 730-6325	DWG. NO. 320	FULTON COUNTY	SHEET: OF:

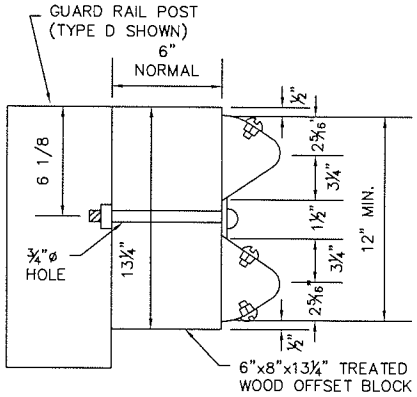

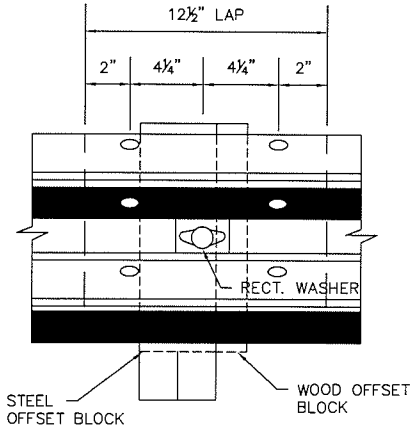

NOTE: OFFSET BLOCKS MAY BE WOOD OR STEEL.

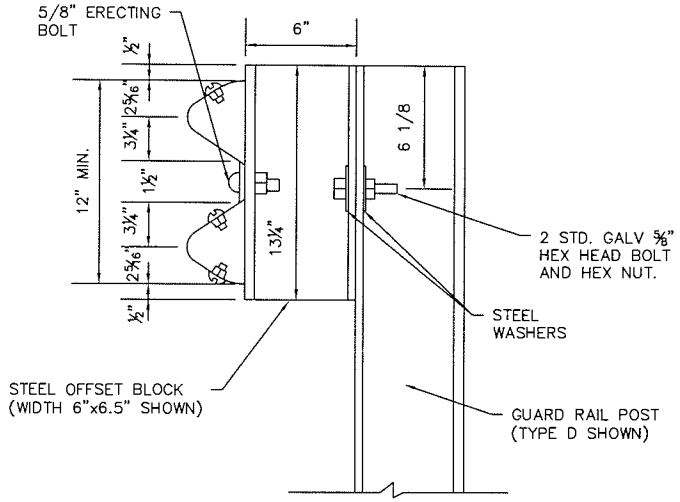

GUARD RAIL SPLICE AT POST

N.T.S.

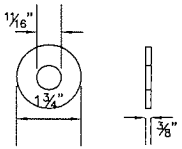

STEEL WASHER (GALV.)

N.T.S.

(REQ'D. UNDER ALL HEX BOLT HEADS AND UNDER ALL HEX NUTS)

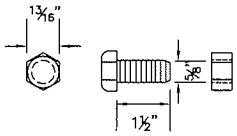

⅝"ø HEX BOLT AND HEX NUT

N.T.S.

(TO BE USED ONLY FOR ATTACHING STEEL OFFSET BLOCK TO STEEL POST.)

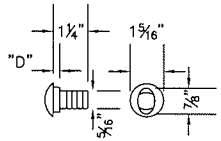

SPLICE BOLT (6 REQ'D PER SPLICE)

N.T.S.

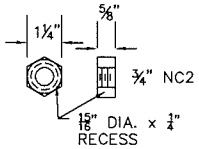

RECESS NUT

N.T.S.

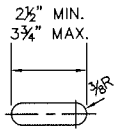

ERECTING BOLT SLOT

N.T.S.

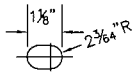

SPLICE BOLT SLOT

N.T.S.

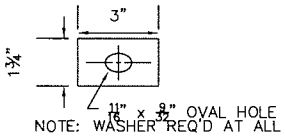

NOTE: WASHER REQ'D AT ALL POSTS.

RECTANGULAR WASHER (GALV) (8 GUAGE)

N.T.S.

FULTON COUNTY STANDARD 321 BEAM TYPE GUARD RAIL (CONT.)	BY	REVISION	DATE	BY	REVISION	DATE	SCALE N.T.S.	DSG/DRN/CHKD: CJP APPROVED: SLS DATE: 1-19-03	FULTON COUNTY PUBLIC WORKS 141 PRYOR ST. ATLANTA, GA. 30303 404-730-7400 FAX: 730-6325	DWG. NO. 321		SHEET: ____ OF: ____

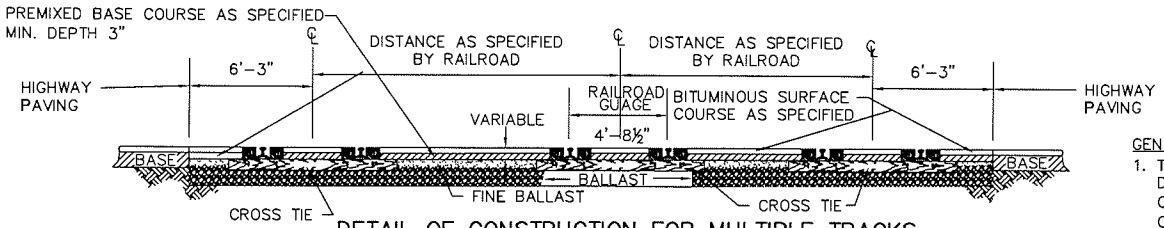

DETAIL OF CONSTRUCTION FOR MULTIPLE TRACKS

N.T.S.

TYPE 1
SECTION

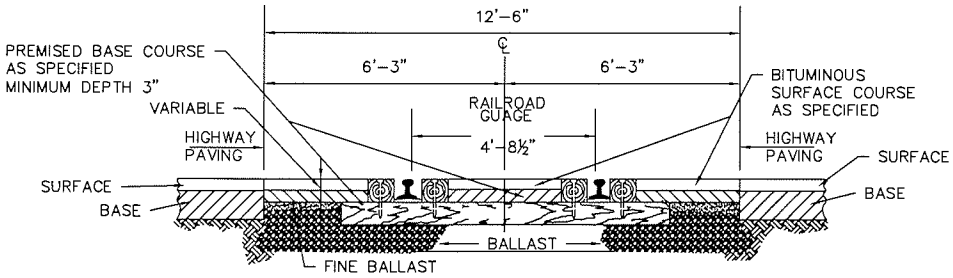

DETAIL OF CONSTRUCTION FOR SINGLE TRACK

N.T.S.

TYPE 2
SECTION

GENERAL NOTES

1. THE RAILROAD IS TO BE NOTIFIED BEFORE ANY WORK IS DONE BY HIGHWAY MAINTENANCE FORCES OR HIGHWAY CONTRACTORS BETWEEN THE RAILS AND WITHIN 8' OF THE CENTERLINE OF TRACK ON TANGENTS AND 10' OF CENTERLINE OF TRACK ON CURVES. aRAILROAD REPRESENTATIVE IS TO BE PRESENT TO SUPERVISE THE WORK BEING DONE AND TO PROTECT THE FORCES WORKING FROM RAILWAY TRAFFIC.
2. BALLAST, TIES, RUNNING RAILS, GUARD TIMBERS AND FILLERS (IF REQUIRED) FOR FLANGEWAY AND OUTSIDE OF RAIL, ARE TO BE FURNISHED AND PLACED BY RAILROAD WITH COSTS, ELIGIBLE FOR REIMBURSEMENT, BEING BILLED TO THE STATE UNDER FORCE ACCOUNT AGREEMENTS.
3. THE HIGHWAY CONTRACTOR TO FURNISH ALL WORK AND MATERIALS NECESSARY FOR CONSTRUCTING THE SURFACE COURSE AND BASE COURSE OF THE CROSSING. THE COST OF FLAGGING SERVICE REQUIRED BY THE RAILROADS FOR ANY CONSTRUCTION ACTIVITY AT GRADE CROSSINGS SHALL BE AT A COST TO THE CONTRACTOR. THIS COST SHALL BE BORNE BY THE CONTRACTOR, WHETHER THE FLAGGING SERVICE IS PERFORMED BY THE CONTRACTOR'S PERSONNEL OR, IF REQUIRED BY THE RAILROADS, TO BE DONE BY THE RAILROAD PERSONNEL.
4. BASIS OF PAYMENT:
   A. BITUMINOUS SRUFACE COURSE AS SPECIFIED.
   B. PREMIXED BASE COURSE AS SPECIFIED
   C. PRECAST REINFORCED CONCRETE SLABS – PER SQ.YD.

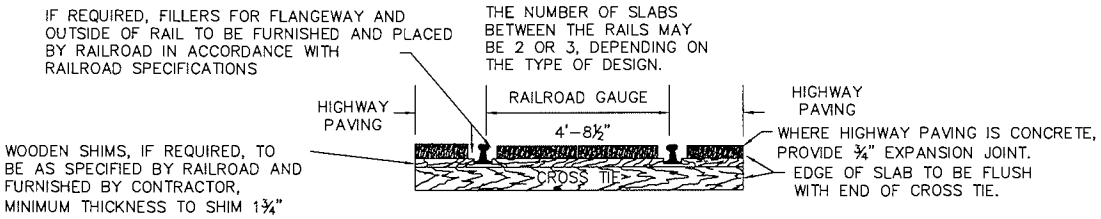

COMMERCIAL PRECAST REINFORCED CONCRETE SLABS

N.T.S.

NOTE:
DIMENSIONS OF PRECAST REINFORCED CONCRETE CLABS WILL VARY WITH DIFFERENT DESIGN.
THE TYPE 2 SECTION ABOVE IS TYPICAL OF ONE TYPE OF COMMERCIAL PRECAST SECTION AND IS TO BE USED FOR INFORMATION ONLY

GENERAL SPECIFICATIONS FOR COMMERCIAL PRECAST REINFORCED CONCRETE SLAB FOR RAILWAY CROSSING:

1. THE PLACING OF PRECAST REINFORCED CONCRETE SLABS WILL BE PERMITTED WHEN APPROVED BY THE RAILROAD AND THE STATE HIGWAY ENGINEER.
2. SLABS TO BE OF THE TYPE THAT CAN BE ANCHORED TO TIES AND REMOVED.
3. IF SLABS ARE OVER MULTIPLE TRACKS, THE INTERTRACK SLABS ARE TO BE PLACED ON LEVEL COMPACTED EARTH.
4. THE DEPTH OF THE SLABS SHALL BE SUCH THAT THE TOP SURFACE OF THE CROSSING WILL BE IN THE SAME PLANE AS THE TOP OF THE RAIL. SHIMS WILL BE USED IF REQUIRED.
5. ALL EXPOSED EDGES OF SLABS SHALL BE ARMORED.
6. PROTECTION OF THE END SLABS AGAINST DRAGGING BRAKE RIGGING WILL BE PROVIDED.
7. IN GENERAL, THE DESIGN OF SLABS WILL BE IN ACCORDANCE WITH (AREA) AMERICAN RAILWAY ENGINEERING ASSOCIATION SPECIFICATIONS.
8. THE TYPE OF COMMERCIAL PRECAST CONCRETE SLABS SELECTED BY THE CONTRACTOR MUST BE APPROVED BY THE ENGINEER.

FULTON COUNTY STANDARD 322 RAILROADS GRADE CROSSING, SECTIONS, DETAILS	BY	REVISION	DATE	BY	REVISION	DATE	SCALE N.T.S.	DSG/DRN/CHKD: CJP APPROVED: REW DATE: 2/19/04	FULTON COUNTY PUBLIC WORKS 141 PRYOR ST. ATLANTA, GA. 30303 404-730-7400 FAX: 730-6325	DWG. NO. 322	FULTON COUNTY	SHEET: OF:

NOTE:
END HIGHWAY PAVING ADJACENT TO THE CROSSING AT THE CROSS TIES INSTEAD OF 6'-3" FROM ℄ OF TRACK, IF PRECAST REINFORCED CONCRETE SLABS ARE USED.

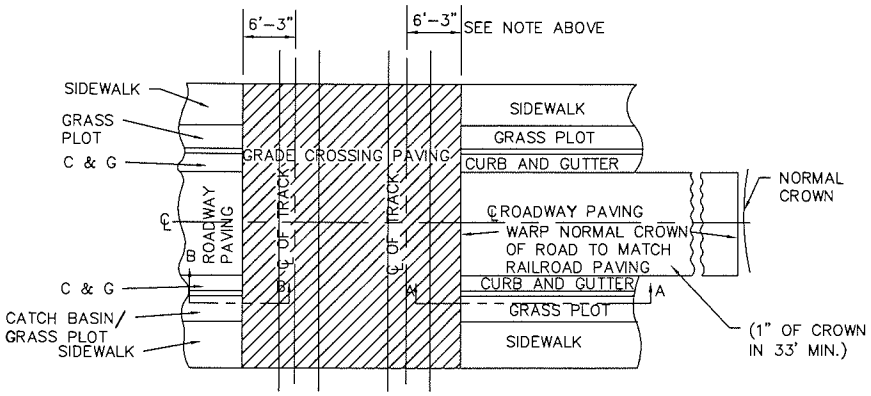

PLAN VIEW
N.T.S.

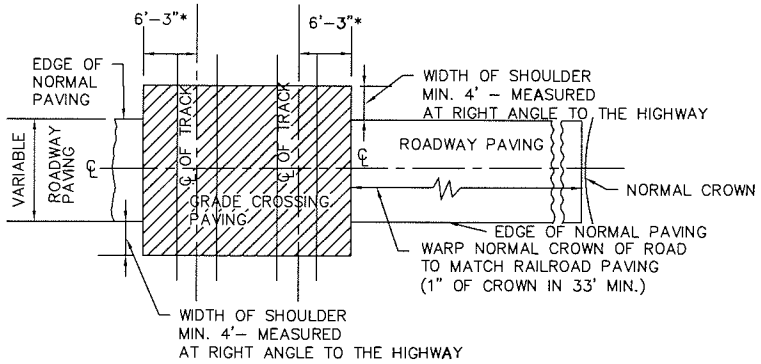

PLAN VIEW
N.T.S.

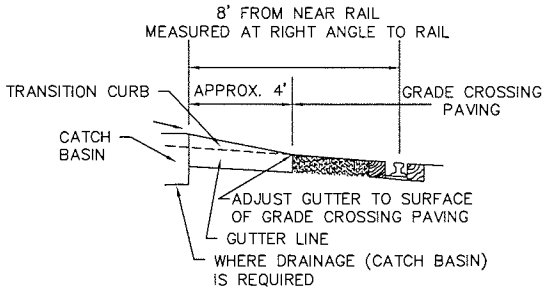

SECTION B-B
N.T.S.

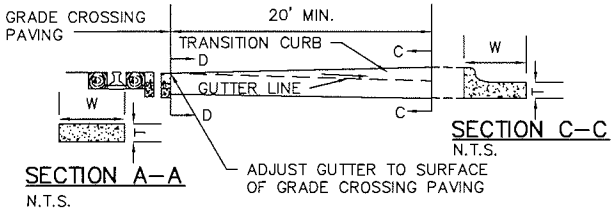

SECTION A-A
N.T.S.

SECTION C-C
N.T.S.

NOTE:
THE SECTION "A-A" AND "B-B" ARE TYPICAL OF ONE CONDITION AND ARE TO BE USED FOR INFORMATION ONLY. THE TRANSITION FOR THE CURB AND GUTTER SECTION TO THE GRADE CROSSING PAVING IS TO BE ADJUSTED AS DIRECTED BY THE ENGINEER.

FULTON COUNTY STANDARD 323 RAILROADS GRADE CROSSING, SECTIONS, DETAILS (CONT.)	BY	REVISION	DATE	BY	REVISION	DATE	SCALE N.T.S.	DSG/DRN/CHKD: CJP APPROVED: SLS DATE: 1-19-03	FULTON COUNTY PUBLIC WORKS 141 PRYOR ST. ATLANTA, GA. 30303 404-730-7400 FAX: 730-6325	DWG. NO. 323	FULTON COUNTY	SHEET: OF:

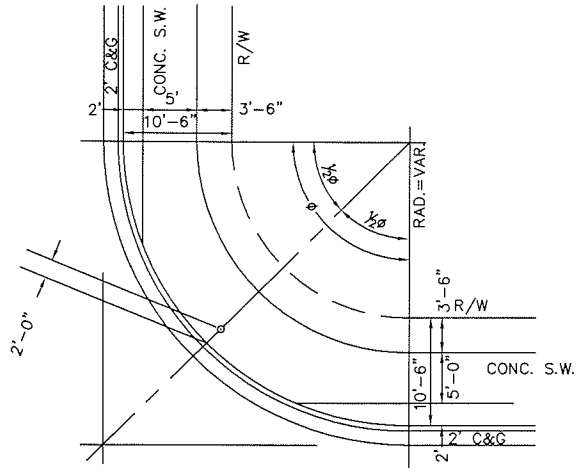

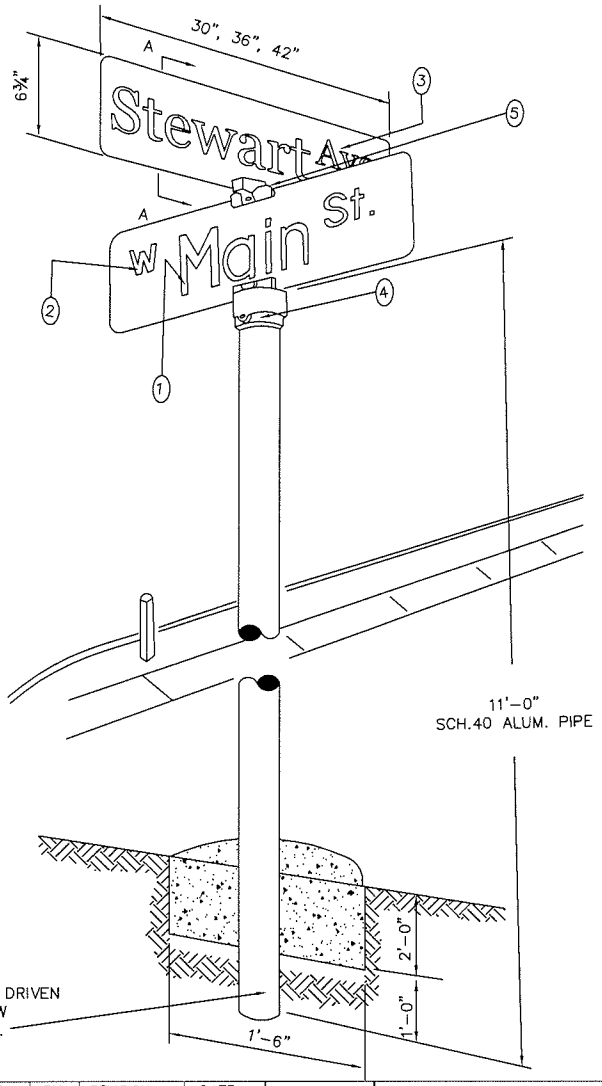

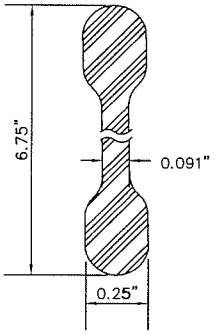

SECTION A–A
N.T.S.

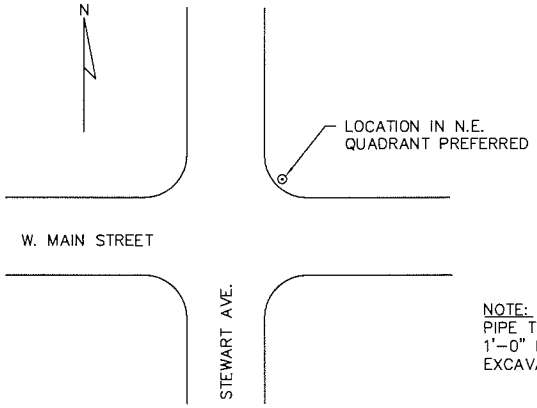

NOTE:
PIPE TO BE DRIVEN
1'–0" BELOW
EXCAVATION.

④ & ⑤ VULCAN SIGN CO.
VSS–1 OR EQUAL
③ SUFFIX 2" U.C.; 1 1/2" L.C.
② PREFIX 2" U.C., 1 1/2" L.C.
① PRIMARY 4" U.C., 3" L.C, 6 3/4" WIDTH.

FULTON COUNTY STANDARD 324 SIGNS STREET NAME, DETAILS & LOCATION	BY	REVISION	DATE	BY	REVISION	DATE	SCALE N.T.S.	DSG/DRN/CHKD: CJP APPROVED: SLS DATE: 1–19–03	FULTON COUNTY PUBLIC WORKS 141 PRYOR ST. ATLANTA, GA. 30303 404–730–7400 FAX: 730–6325	DWG. NO. 324	FULTON COUNTY	SHEET: OF:

*** ON EXISTING PAVEMENTS WHERE LANE WIDENING IS REQUIRED. SAW CUT THE FIRST 12 INCHES OF PAVEMENT AND ESTABLISH REQUIRED SUB-GRADE MATERIAL AND THICKNESS.

* NEW PAVEMENT IS REQUIRED ACROSS THE ENTIRE LENGTH AND WIDTH OF ALL PROPERTY FRONTAGE AND INSTALLED AS PER F.C. INSPECTORS INSTRUCTIONS.

PAVEMENT COMPOSITION

1½" TYPE "E" OR "F" WEARING COURSE
5" CLASS A CONCRETE BASE (LOCAL STREETS AND MINOR COLLECTORS) OR
2" CLASS A CONCRETE BASE (MAJOR COLLECTORS AND ARTERIALS)

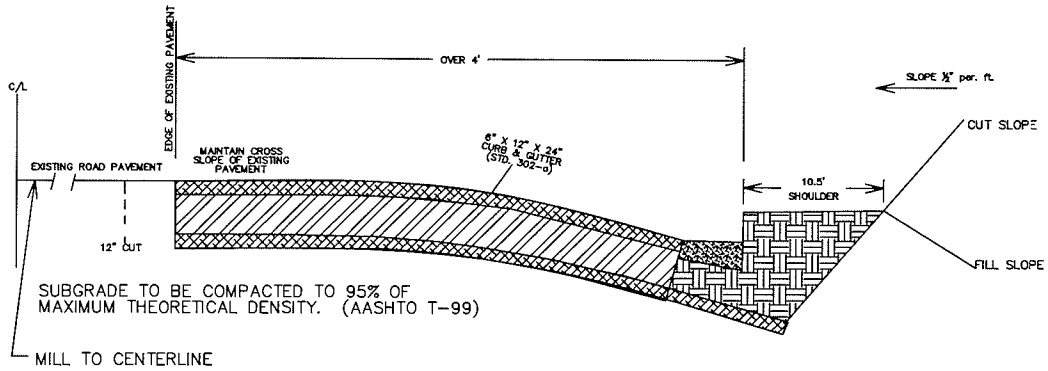

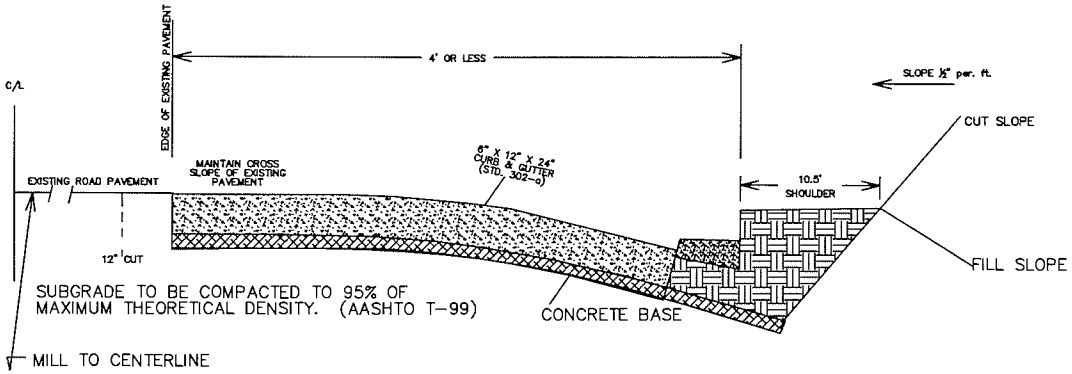

SUBGRADE TO BE COMPACTED TO 95% OF MAXIMUM THEORETICAL DENSITY. (AASHTO T-99)

PAVEMENT COMPOSITION

1½" "E" TOPPING
TACK COAT CRS - 2H OR AC-30 REQ.
2" PLANT MIX "B" BINDER MODIFIED PRIME RC-70
"B" GRADED AGGREGATE BASE (CRUSHER RUN)

FULTON COUNTY STANDARD DETAIL 325 PAVEMENT WIDENING		DATE	REVISIONS	DATE	REVISIONS	DGS/DRN/CHKD: CMS APPROVED: LJM DATE: 4-19-05	FULTON COUNTY FULTON COUNTY PUBLIC WORKS 141 PRYOR ST. ATLANTA, GA. 30303 404-730-7400 FAX: 404-730-6325	DRAWING NO. 325

INDEX

DWG NO.	DESCRIPTION
400	INDEX AND GENERAL NOTES
401	SANITARY SEWER TYPICAL RIP-RAP CHANNEL PIPE CROSSING
402	CONSTRUCTION EXIT-TEMPORARY
403	CONCRETE PIER AND FOOTING DETAIL
404	TEMPORARY SILT FENCE
405	DETAIL OF SOD DITCH
406	CONCRETE PIER AND FOOTING DETAIL
407	EROSION CONTROL-CHECK DAMS

GENERAL NOTES

FULTON COUNTY STANDARD DETAIL
INDEX AND GENERAL NOTES

DATE	REVISIONS	DATE	REVISIONS

DGS/DRN/CHKD: CMS
APPROVED: REW
DATE: 12-02-05

FULTON COUNTY

FULTON COUNTY PUBLIC WORKS
141 PRYOR ST. ATLANTA, GA. 30303
404-730-7400 FAX: 404-730-6325

DRAWING NO.
INDEX
400

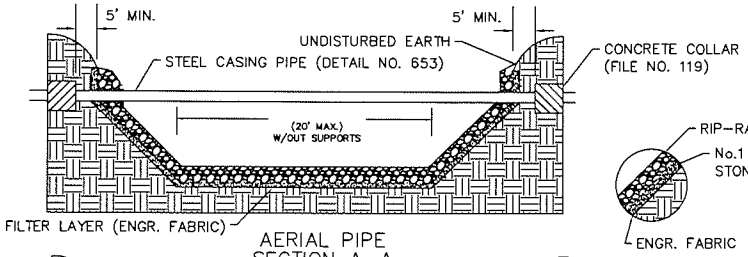

AERIAL PIPE
SECTION A-A
N.T.S.

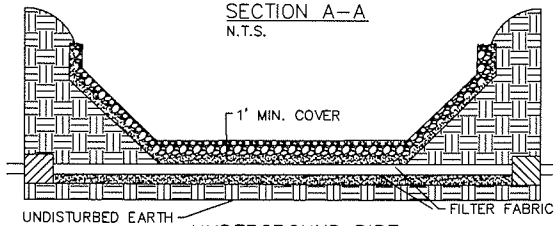

UNDERGROUND PIPE
SECTION A-A
N.T.S.

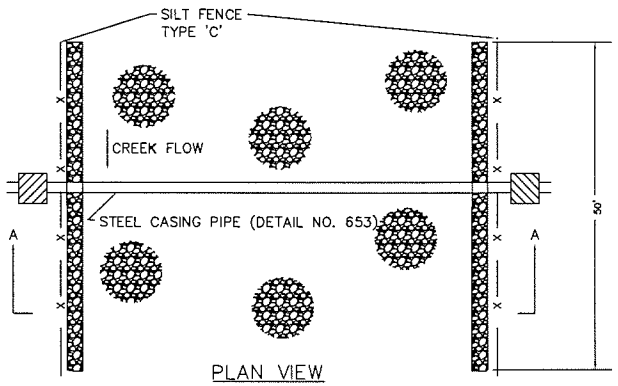

PLAN VIEW

NOTE REQUIRED-
CONCRETE STRENGTH TEST MAY BE REQUIRED FOR ALL POURED IN PLACE CONCRETE.

NOTES:
1. MINIMUM STONE SIZE SHALL BE 125 LBS.
2. STONE SIZE SHALL BE PROVIDED BY DESIGN ENGINEER OR FULTON COUNTY PUBLIC WORKS ENGINEER.
3. ALL EROSION CONTROL DEVICES MUST BE IN PLACE PRIOR TO ANY GRADING OR CLEARING.
4. ALL EROSION CONTROL SHALL CONFORM TO FULTON COUNTY STANDARDS.
5. RIM OF MANHOLE SHALL BE 2' ABOVE GRADE. IF IN A FLOOD ZONE, RIM SHALL BE ABOVE 25 YEAR STORM ELEVATION.
6. SEE MANUAL FOR EROSION & SEDIMENT CONTROL IN GEORGIA FOR MORE INFORMATION.

GRADED RIP-RAP STONE

FLOW VELOCITY (FT./SEC.)	N.S.A. *1	SIZE INCHES (SQ. OPENING)			PARTICLE WEIGHT (LBS.)*2
		MAX.	AVG.	MIN.	
2.5	R-1	1 1/2	3/4	NO.8	--
4.5	R-2	3	1 1/2	1	--
6.5	R-3	6	3	2	20
9.0	R-4	12	6	3	60
11.5	R-5	18	9	5	150
13.0	R-6	24	12	7	300
14.5	R-7	30	15	12	700
--	R-8	48	24	15	1500

*1. NATIONAL STONE ASSOCIATION.

*2. AT LEAST 50% OF ALL INDIVIDUAL STONE PARTICLES MUST WEIGH AT LEAST THE LISTED AMOUNT.

GRADED RIP-RAP STONE

D.O.T. *NO.1	SIZE INCHES (SQ. OPENING)			COMMON USES
	MAX.	AVG.	MIN.	
TYPE 3	12	9	5	CREEK BANKS, PIPE OUTLETS, LAKES, SHORELINES & RIVERS
TYPE 1	24	12	7	

*1. GEORGIA DEPARTMENT OF TRANSPORTATION.

GRADED RIP-RAP STONE

TYPE 3: FOR GENERAL USE NORMAL DRAINAGE CONDITIONS: THE LARGEST PIECES OF MATERIAL SHALL HAVE A MAXIMUM APPROXIMATE VOLUME OF ONE CUBIC FOOT. AT LEAST 35% OF THE MASS SHALL BE COMPRISED OF PIECES WHICH WEIGH 15 POUNDS OR MORE.

TYPE 1: FOR SEVERE DRAINAGE CONDITIONS OR MODERATE WAVE ACTION: THE LARGEST PIECES OF MATERIAL SHALL HAVE A MAXIMUM OF TWO CUBIC FEET. AT LEAST 35% OF THE MASS SHALL BE COMPRISED OF PIECES WHICH WEIGH 125 POUNDS OR MORE.

FULTON COUNTY STANDARD DETAIL 401
SANITARY SEWER TYPICAL RIP-RAP
CHANNEL PIPE CROSSING

DATE	REVISIONS	DATE	REVISIONS

DGS/DRN/CHKD: REB
APPROVED: REW
DATE: 12-2-05

FULTON COUNTY

FULTON COUNTY PUBLIC WORKS
141 PRYOR ST. ATLANTA, GA. 30303
404-730-7400 FAX: 404-224-0498

DRAWING NO. 401

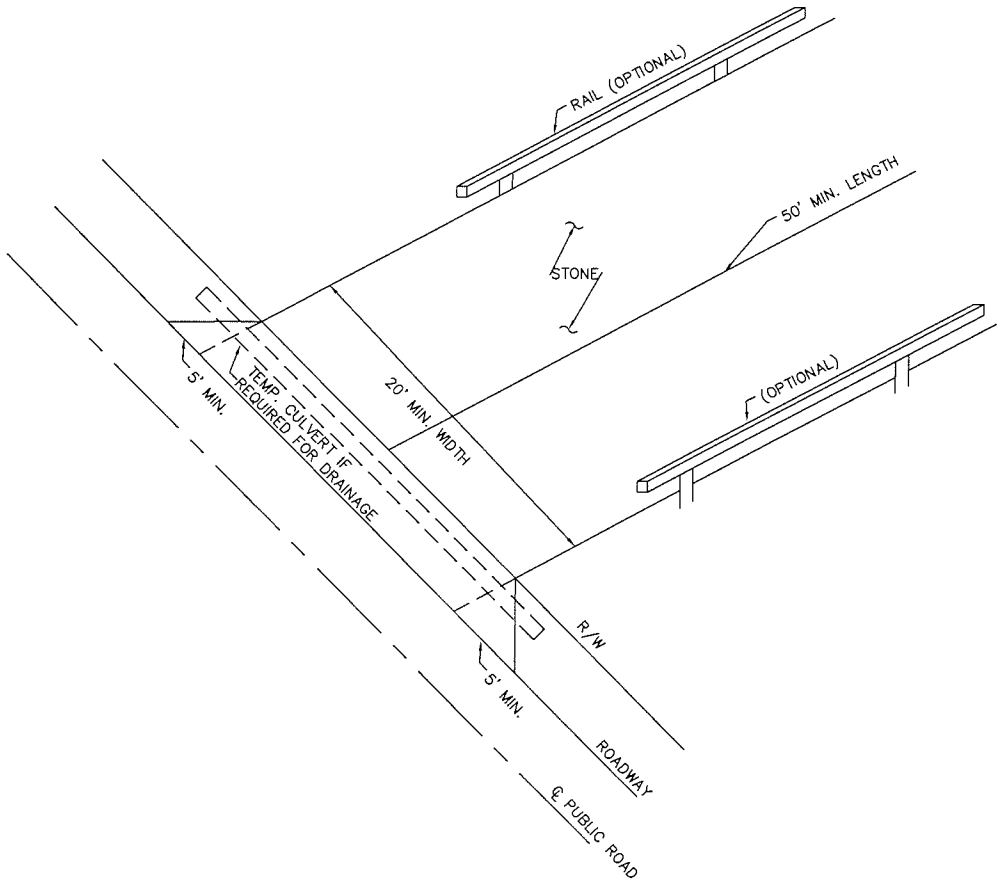

NOTES:

1. STONE SIZE ASTM. D448 SIZE NO. 1, (1.5" – 3.5" DIA.)
2. PAD THICKNESS 6" MIN.
3. MIN. SIZE: 20'x50'.
4. IF NECESSARY, INCLUDE WASHING
5. MAY REQUIRE PERIODIC TOP DRESSING WITH 2" STONE.
6. MAINTAIN IN A CONDITION WHICH WILL PREVENT TRACKING OR FLOW OF MUD ONTO PUBLIC ROADS.
7. PLACE STONE OVER FABRIC MATERIAL.
8. USE RAIL WHEN THERE IS A POSSIBILITY OF HAZZARD DUE TO SLOPE.
9. SEE ADDITIONAL EROSION CONTROL MEASURES IN THE EROSION CONTROL AND SEDIMENTATION ORDINANCE MANUAL AND THE GA. STATE EROSION CONTROL MANUAL.

FULTON COUNTY STANDARD DETAIL 402
CONSTRUCTION EXIT–TEMPORARY

DATE	REVISIONS	DATE	REVISIONS

DGS/DRN/CHKD: REB
APPROVED: REW
DATE: 12–2–05

FULTON COUNTY

FULTON COUNTY PUBLIC WORKS
141 PRYOR ST. ATLANTA, GA. 30303
404–730–7400 FAX: 404–224–0498

DRAWING NO.
402

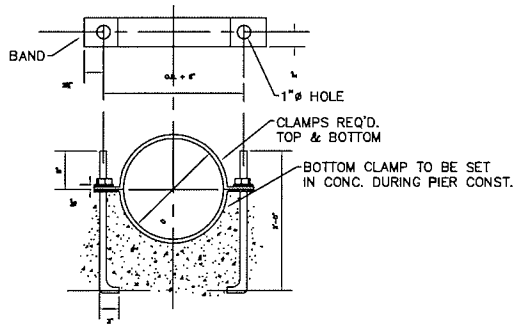

CLAMP DETAIL
N.T.S.

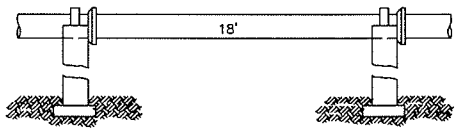

1. PIER LOCATION DETERMINED BY ENGR.
2. CONCRETE TO BE 3,000 P.S.I.
3. UNDER UNSTABLE CONDITIONS, ENG. PLANS FOR PIER DESIGN MUST BE SUBMITTED TO & APPROVED BY THE PUBLIC WORKS DEPT.
4. PIERS AT EVERY BELL.
5. ENG'R. TO SUBMIT DESIGN FOR
6. STEEL REINFORCEMENT TO BE A.S.T.M DESIGNATION A –15 – 54T UNLESS OTHERWISE SPECIFIED, BENDS IN BARS TO CONFORM TO A.C.I. STANDARD.

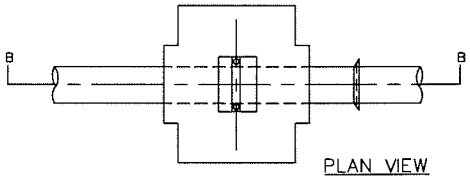

PLAN VIEW
N.T.S.

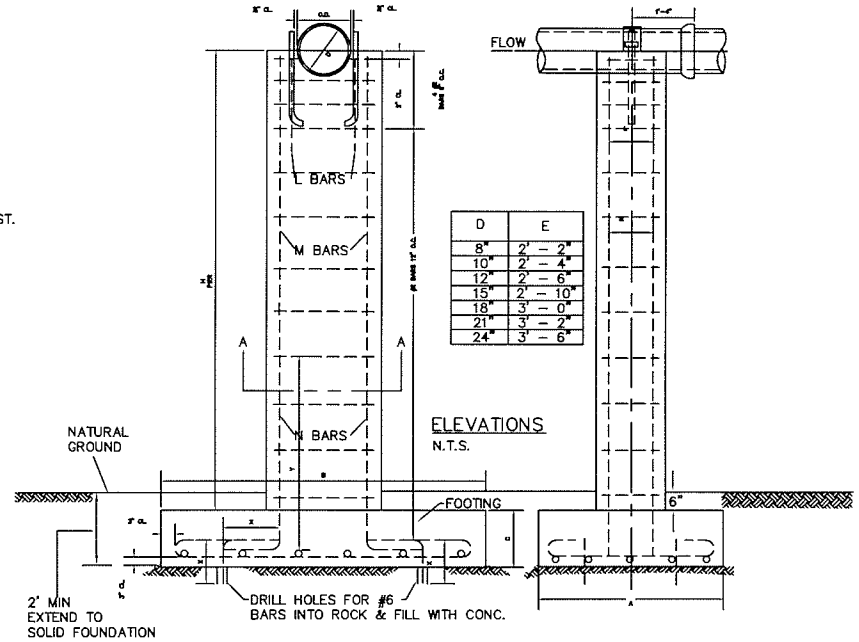

D	E
8"	2' – 2"
10"	2' – 4"
12"	2' – 6"
15"	2' – 10"
18"	3' – 0"
21"	3' – 2"
24"	3' – 6"

ELEVATIONS
N.T.S.

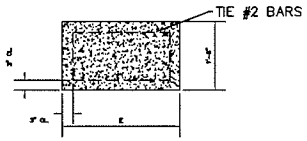

SECTION A–A
N.T.S.

FULTON COUNTY STANDARD DETAIL 403 CONCRETE PIER AND FOOTING DETAIL		DATE	REVISIONS	DATE	REVISIONS	DGS/DRN/CHKD: REB APPROVED: REW DATE: 12–2–05	FULTON COUNTY FULTON COUNTY PUBLIC WORKS 141 PRYOR ST. ATLANTA, GA. 30303 404–730–7400 FAX: 404–224–0498	DRAWING NO. 403

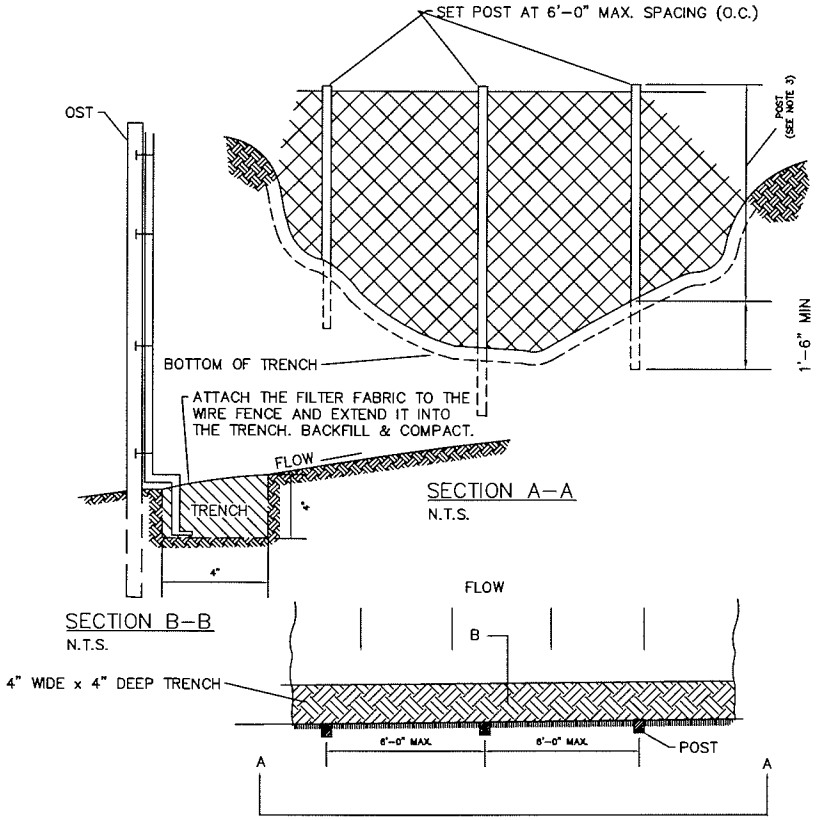

TEMPORARY SILT FENCE

1. TYPE A. DESCRITION: WATER PERMEABLE FILTER FENCE MATERIAL COMPOSED OF STRONG ROT PROOF SYNTHETIC FIBERS FORMED INTO A MATRIX OF WOVEN OR NONWOVEN FABRIC. EITHER TYPE OF FABRIC SHALL BE FREE OF ANY TREATMENT OR COATING WHICH MIGHT SIGNIFICANTLY ALTER IT'S PHYSICAL PROPERTIES AFTER INSTALLATION. THE FABRIC SHALL CONTAIN STABILIZER AND/OR INHIBITORS TO MAKE THE FILAMENTS RESISTANT TO DETERIORATION RESULTING FROM EXPOSURE TO SUNLIGHT OR HEAT. THE FABRIC SHALL BE A PERVIOUS SHEET OF SYNTHETIC FIBERS ORIENTED INTO A NETWORK SO THAT THE FIBERS RETAIN THEIR RELATIVE POSITION WITH RESPECT TO EACH OTHER.
   EDGES OF THE FABRIC SHALL BE FINISHED TO PREVENT THE OUTER YARN FROM PULLING AWAY FROM THE MATERIAL. THE FABRIC SHALL BE FREE OF DEFECTS OR FLAWS WHICH SIGNIFICANTLY AFFECT THE PHYSICAL AND/OR FILTERING PROPERTIES. THE FABRIC SHALL HAVE A MINIMUM WIDTH OF THIRTY SIX (36) INCHES. SHEETS OF FABRIC MAY BE PERMITTED DUE TO THE PRESENCE OF THE SEAM.
   THE FABRIC MAY BE MANUFACTURED WITH POCKETS FOR POSTS, HEMS WITH CORD OR WITH POSTS PREATTACHED USING STAPLES OR BUTTON HEAD NAILS.

2. TYPE B. DESCRIPTION: TYPE B FILTER FABRIC SHALL MEET THE SAME STANDARDS AS TYPE A. FILTER FABRIC SHALL BE A MINIMUM OF 22" WIDE.

3. MATERIALS
   A. POSTS
      1. HARDWOOD: 1.5"x1.5"x48" MINIMUM FOR TYPE A FABRIC. FOR TYPE B FABRIC,1"x1"x36" MINIMUM.
      2. SOFTWOOD: 3" DIAMETER MINIMUM OR NOM. 2"x4" AND STRAIGHT ENOUGH TO PROVIDE A FENCE WITHOUT NOTICABLE MISALIGNMENT FOR TYPE A FABRIC. FOR TYPE B FABRIC, AT LEAST 2" IN DIAMETER OR NOM. 2"x2".
      3. STEEL: POSTS SHALL BE ROUND, U.T. OR C SHAPED WITH A MINIMUM WEIGHT OF 1.3 POUNDS PER FEET AND HAVE PROJECTIONS FOR FASTENING THE WIRE TO THE FENCE FOR TYPE A FABRIC. FOR TYPE B FABRIC, POSTS SHALL HAVE A MINIMUM WEIGHT OF 0.75 POUNDS PER FOOT AND ROUND POSTS SHALL BE A MINIMUM OF 1" IN DIAMETER.

   B. SPACING: SIX (6) FOOT CENTERS MAXIMUM.

   C. FABRIC: GEORGIA DOT QUALIFIED PRODUCTS LIST #36 ONLY.

   D. FASTENERS: WIRE STAPLES WILL BE NO. 17 GAGE MINIMUM AND SHALL HAVE A CROWN AT LEAST 3/4 INCH WIDE AND LEGS AT LEAST 1/2 INCH LONG. STAPLES SHALL BE EVENLY SPACED WITH AT LEAST 5 PER POST. NAILS SHALL BE 14 GAGE MINIMUM ONE INCH LONG WITH 3/4 INCH BUTTON HEADS. NAILS SHALL BE EVENLY SPACED WITH AT LEAST 4 PER POST.

4. INSTALLATION: TEMPORARY SILT FENCE INSTALLATION SHALL CONFORM TO THE STANDARDS SET FORTH IN THE MANUAL FOR EROSION AND SEDIMENT CONTROL IN GEORGIA.

5. MAINTENANCE: THE DEVELOPER/CONTRACTOR SHALL MAINTAIN THE SILT FENCE UNTIL THE LDA IS COMPLETE AND FINAL STABILIZATION IS ACHIEVED. FILTER FABRIC SHALL BE REMOVED AND REPLACED WHENEVER IT HAS DETERIORATED OR BEEN OTHERWISE DAMAGED TO SUCH EXTENT THAT IT REDUCES THE EFFECTIVENESS OF THE SILT FENCE.
   INSTALLATION OF FABRIC FENCE MATERIAL IN AREAS OF CONCENTRATED FLOW IS NOT RECOMMENDED UNLESS PROPER PROVISIONS ARE MADE TO SUPPLEMENT OR OTHERWISE STRENGTHEN THE FENCE TO WITHSTAND INCREASED DRAINAGE WATER VELOCITIES.

NOTE:
VENDOR MUST SUPPLY LETTER OF WARRENTY FOR AFOREMENTIONED SPECIFICATIONS. IN ADDITION, THIS LETTER SHOULD STATE THAT THE FABRIC IS ON THE GEORGIA QPL #36.

FULTON COUNTY STANDARD DETAIL 404 TEMPORARY SILT FENCE		DATE	REVISIONS	DATE	REVISIONS	DGS/DRN/CHKD: REB APPROVED: REW DATE: 12-2-05	FULTON COUNTY	FULTON COUNTY PUBLIC WORKS 141 PRYOR ST. ATLANTA, GA. 30303 404-730-7400 FAX: 404-224-0498	DRAWING NO. 404

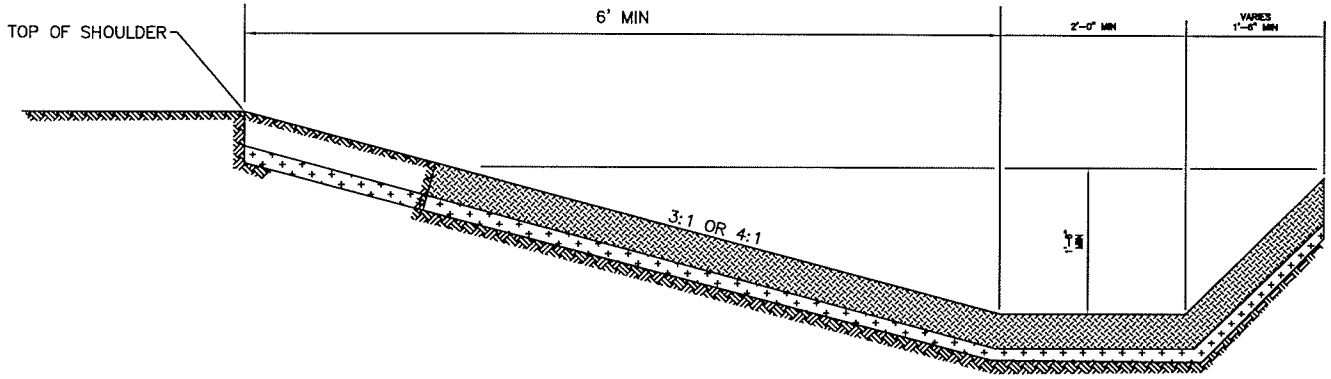

NOTE:
RIP RAP CHECK DAMS TO BE PLACED AS NECESSARY DEPENDING ON GRADE OF DITCH.

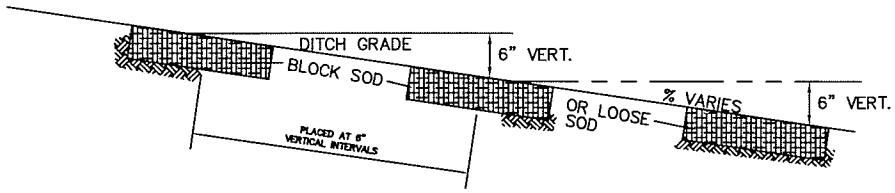

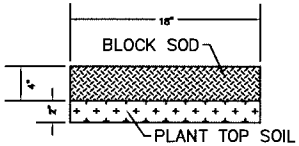

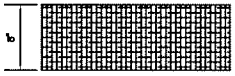

LOOSE SOD

NOTE:
SOD DITCH CHECKS MAY BE OF LOOSE SOD OR BLOCK SOD.
SOD DITCH CHECKS TO BE PLACED AT 6" VERTICAL INTERVALS.
THIS STANDARD TO BE USED WHERE EROSION IN ROADSIDE DITCHES IS EXCESSIVE DUE TO TYPE OF SOIL OR GRADE.

		DATE	REVISIONS	DATE	REVISIONS				DRAWING NO.
FULTON COUNTY STANDARD DETAIL 405 DETAIL OF SOD DITCH						DGS/DRN/CHKD: REB APPROVED: REW DATE: 12-2-05	FULTON COUNTY	FULTON COUNTY PUBLIC WORKS 141 PRYOR ST. ATLANTA, GA. 30303 404-730-7400 FAX: 404-224-0498	405

STANDARD REINFORCED PIER

FOOTING DIMENSIONS AND REINFORCEMENT								PIER REINFORCEMENT							
PIER	FOOTING			NO. OF #5 BARS EA. DIRECTION				BARS M			BARS N				
H	A	B	C	8" & 10"D.	12" & 14"D.	16" & 18"D.	20" & 24"D.	NO.	SIZE	LENGTH	NO.	SIZE	LENGTH	X	Y
0'–4'	3'–0"	6'–0"	1'–3"	5	5	5	5	NONE			6	#6	H + 2 ' –0"	1'–9"	H + 10"
5'	3'–2"	6'–2"	1'–3"	5	5	5	5	NONE			6	#6	H + 2 ' –0"	1'–9"	H + 10"
6'	3'–4"	6'–4"	1'–3"	5	5	5	5	4	#6	4'–10"	6	#6	5'–4"	1'–9"	4'–2"
7'	3'–6"	6'–6"	1'–3"	5	5	5	6	4	#6	5'–10"	6	#6	5'–4"	1'–9"	4'–2"
8'	3'–8"	6'–8"	1'–3"	5	5	5	6	4	#6	7'–10"	6	#6	5'–4"	1'–9"	4'–2"
9'	3' –10"	6'–10"	1'–3"	5	5	6	7	4	#6	8'–10"	6	#6	5'–4"	1'–9"	4'–2"
10'	4'–0"	7'–0"	1'–3"	5	5	6	7	4	#6	9'–10"	6	#6	5'–4"	1'–9"	4'–2"
11'	4'–2"	7'–2"	1'–3"	5	5	7	8	4	#6	10'–10"	6	#6	5'–4"	1'–9"	4'–2"
12'	4'–4"	7'–4"	1'–3"	5	5	7	8	4	#6	11'–10"	6	#6	5'–4"	1'–9"	4'–2"
13'	4'–6"	7'–6"	1'–6"	5	6	7	8	4	#6	12'–10"	6	#6	5'–7"	1'–9"	4'–5"
14'	4'–8"	7'–8"	1'–6"	6	6	8	9	4	#6	13'–10"	6	#6	5'–7"	1'–9"	4'–5"
15'	4'–10"	7'–10"	1'–6"	6	6	8	9	4	#6	14'–10"	6	#6	5'–7"	1'–9"	4'–5"
16'	5'–0"	8'–0"	1'–6"	6	6	8	9	4	#6	15'–10"	6	#6	5'–7"	1'–9"	4'–5"
17'	5'–2"	8'–2"	1'–6"	6	7	9	10	4	#6	16'–10"	6	#6	5'–7"	1'–9"	4'–5"
18'	5'–4"	8'–4'	1'–6"	7	8	9	10	4	#6	17'–10"	6	#6	5'–7"	1'–9"	4'–5"
19'	5'–6"	8'–6"	1'–6"	7	8	10	11	4	#6	18'–10"	6	#6	5'–7"	1'–9"	4'–5"
20'	5'–8"	8'–8"	1'–6"	7	9	10	12	4	#6	19'–10"	6	#6	5'–7"	1'–9"	4'–5"
21'	5'–10"	8'–10"	1'–6"	8	9	11	12	4	#6	19'–10"	6	#6	6'–0"	1'–9"	4'–9'
22'	6'–0"	9'–0"	1'–6"	9	10	12	13	4	#6	19'–10"	6	#6	7'–0"	1'–9"	5'–9'
23'	6'–2"	9'–2"	1'–6"	9	10	12	13	4	#6	19'–10"	6	#6	8'–0"	1'–9"	6'–9'
24'	6'–4"	9'–4"	1'–6"	10	11	13	15	4	#6	19'–10"	6	#6	9'–0"	1'–9"	7'–9'
25'	6'–6"	9'–6"	1'–6"	10	11	14	16	4	#6	19'–10"	6	#6	11'–0"	1'–9"	9'–3"
26'	6'–8"	9'–8"	1'–6"	11	12	15	16	4	#6	19'–10"	6	#6	12'–0"	1'–9"	10'–3"
27'	6'–10"	9'–10"	1'–6"	12	13	16	17	4	#6	19'–10"	6	#6	13'–0"	1'–9"	11'–3'
28'	7'–0"	10'–0"	1'–6"	12	13	16	18	4	#6	19'–10"	6	#6	14'–0"	1'–9"	12'–3"

BARS L	H	NO.–SIZE–LENGTH		
	0'–4"	NONE		
	4'–28"	2	#6	2'–6"

FULTON COUNTY STANDARD DETAIL 406
CONCRETE PIER AND FOOTING DETAIL

DATE	REVISIONS	DATE	REVISIONS

DGS/DRN/CHKD: REB
APPROVED: REW
DATE: 12–2–05

FULTON COUNTY

FULTON COUNTY PUBLIC WORKS
141 PRYOR ST. ATLANTA, GA. 30303
404–730–7400 FAX: 404–224–0498

DRAWING NO. 406

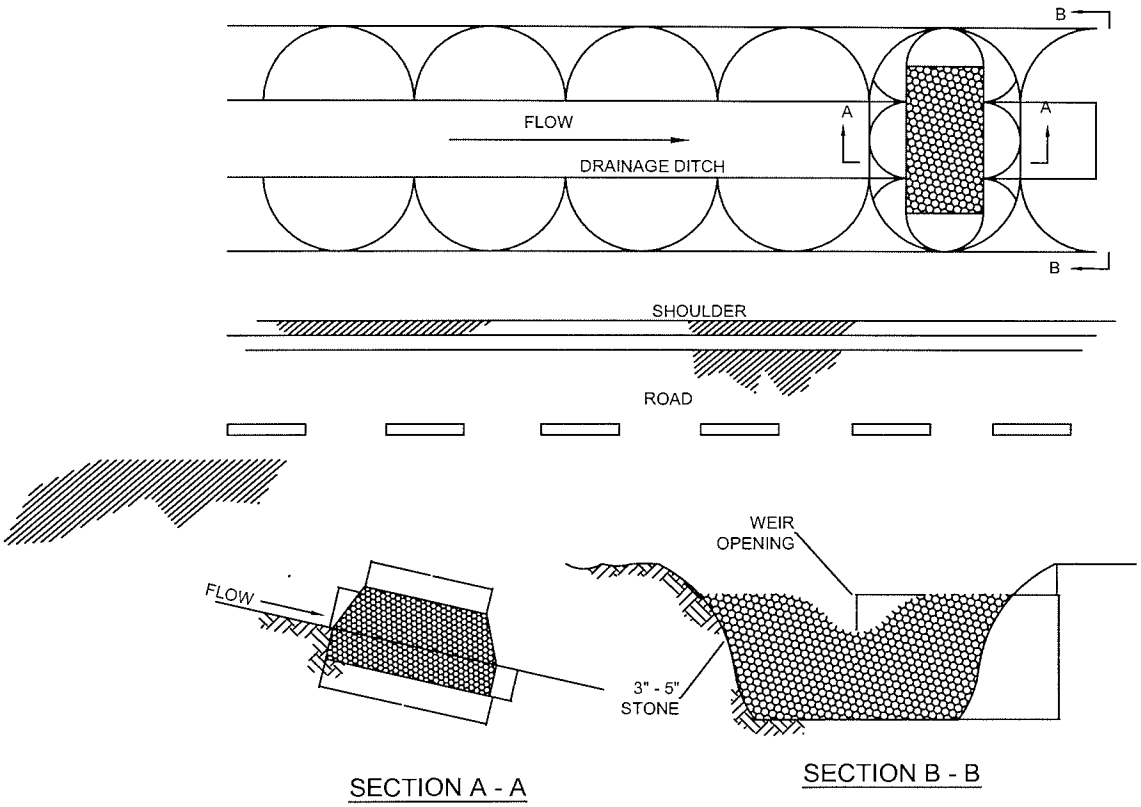

NOTES:

1. USE AND LOCATION OF CHECK DAMS SHALL BE AS DIRECTED BY INSPECTOR.

FULTON COUNTY STANDARD DETAIL 407 EROSION CONTROL CHECK DAMS		DATE	REVISIONS	DATE	REVISIONS	DGS/DRN/CHKD: CMS APPROVED: REW DATE: 12-2-05	FULTON COUNTY	FULTON COUNTY PUBLIC WORKS 141 PRYOR ST. ATLANTA, GA. 30303 404-730-7400 FAX: 404-224-0498	DRAWING NO. 407

INDEX

DWG NO.	DESCRIPTION
500	INDEX AND GENERAL NOTES
501	CATCH BASIN ONE FOOT OFFSET, SINGLEWING (FACE OF CURB)
502	CATCH BASIN DOUBLEWING ONE FOOT OFFSET (FACE OF CURB)
503	STANDARD CATCH BASINS WITH ROLLED CURB & GUTTER 10" OFFSET (BOC)
504	SINGLE WING ON LINE CATCH BASIN (BRICK)
505	CATCH BASIN DOUBLEWING ONLINE
506	CATCH BASIN TOPS
507	STANDARD PRECAST ROUND CATCH BASINS
508	LOCATION OF ROUND CATCH BASIN
509	DROP INLETS, BRICK & CATCH BASIN EXTENSION
510	DROP INLETS, CONCRETE, DETAILS FOR PAVED SECTIONS ONLY
511	DROP INLETS DIMENSION
512	DROP INLETS WEIR TYPE
513	DROP INLETS, BRICK & CATCH BASIN EXTENSION
514	PRECAST CONCRETE HEADWALL SYSTEM
515	INLET HEADWALL-OUTLET HEADWALL-INLET HEADWALL WITH TAPERED PIPE
516	ENERGY DISSIPATOR ALTERNATE
517	CONCRETE PIER & FOOTING DETAIL
518	CONRETE PIER AND FOOTING DETAIL
519	STRUCTURAL PLATE PIPE-ARCH CULVERT
520	STANDARD PIPE CULVERTS
521	PIPE CULVERTS (TABLES)
522	PIPE CULVERTS (TABLES CONT.)
523	PERFORATED UNDERDRAIN
524	PIPE GAUGE AND CLASS (CONCRETE & CORRUGATED STEEL PIPE)
525	EARTHFILL DAM FOR DETENTION PONDS
526	FENCE DETAIL FOR DETENTION PONDS (ATL. TO CHAIN LINK)
527	FENCE DETAIL FOR DETENTION PONDS

GENERAL NOTES

FULTON COUNTY STANDARD DETAIL
INDEX AND GENERAL NOTES

DATE	REVISIONS	DATE	REVISIONS

DGS/DRN/CHKD: CMS
APPROVED: REW
DATE: 12-02-05

FULTON COUNTY

FULTON COUNTY PUBLIC WORKS
141 PRYOR ST. ATLANTA, GA. 30303
404-730-7400 FAX: 404-730-6325

DRAWING NO. 500

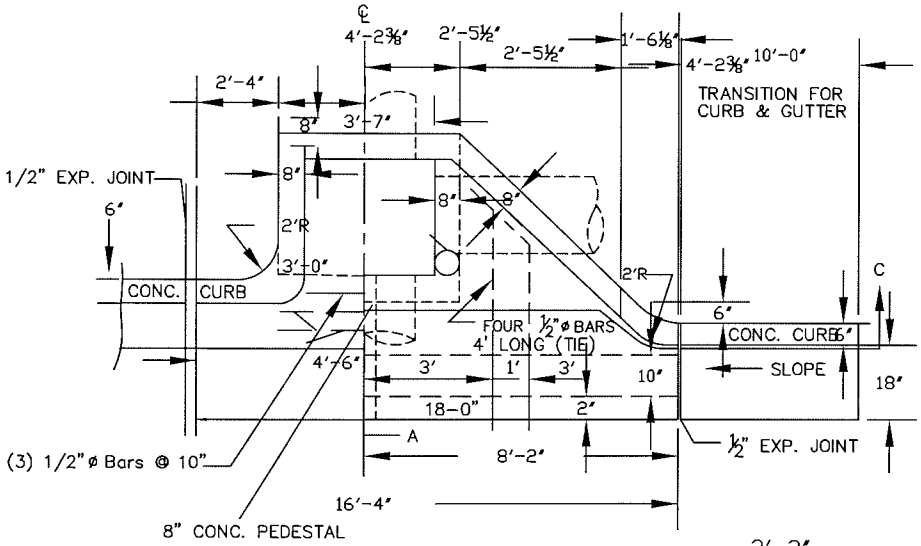

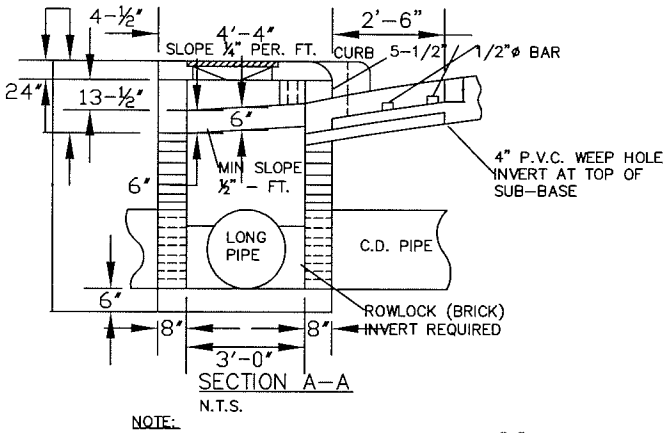

SECTION A-A
N.T.S.

NOTE:
ALL POURED-IN-PLACE CONC. TO BE CLASS "A" 3000 P.S.I.

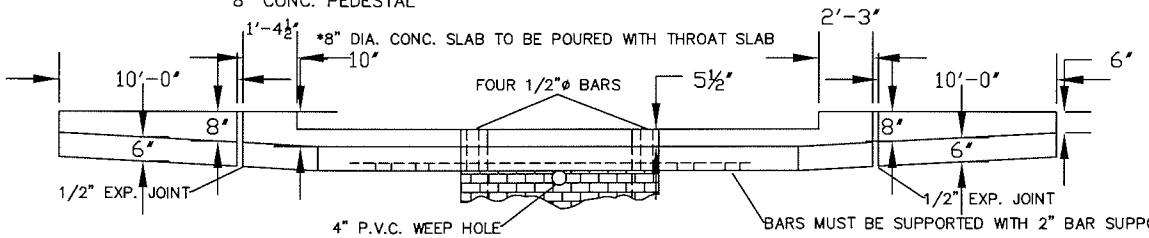

NOTE REQUIRED:
CONCRETE STRENGTH TEST REQUIRED
FOR ALL POURED IN PLACE CONCRETE.

NOTE:
FOR ALL CATCH BASINS, 1/2" EXPANSION JOINT MATERIAL SHALL BE PLACED AROUND THE CATCH BASIN WHERE SIDEWALK OR MEDIAN PAVEMENT IS PLACED ADJACENT TO THE CATCH BASIN

SECTION C-C
(CAST IN PLACE)
N.T.S.

IN ANY SUBDIVISION THE OPTION IS TO USE EITHER
ALL ONLINE CATCH BASINS
OR ALL ONE FOOT OFFSET CATCH BASINS.

ONE FOOT OFFSET REQUIRED IN ALL CUL-DE-SACS.

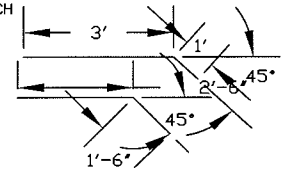

INSIDE DIAMETER OF PIPE IN INCHES	MINIMUM H
12-18	4'-10"
24	5'-6"
30	6'-2"

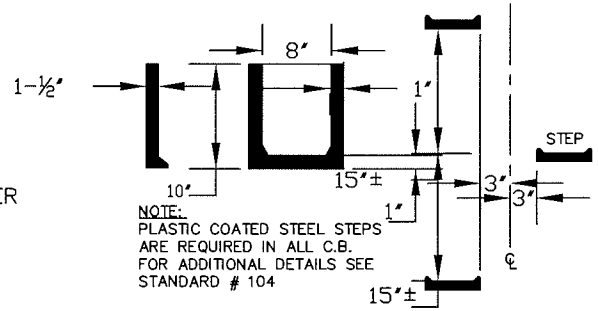

NOTE:
PLASTIC COATED STEEL STEPS
ARE REQUIRED IN ALL C.B.
FOR ADDITIONAL DETAILS SEE
STANDARD # 104

ARRANGEMENT OF STEPS

FULTON COUNTY STANDARD DETAIL 501
CATCH BASIN
ONE FOOT OFFSET, SINGLEWING
(FACE OF CURB)

DATE	REVISIONS	DATE	REVISIONS

DGS/DRN/CHKD: CMS
APPROVED: REW
DATE: 12-2-05

FULTON COUNTY

FULTON COUNTY PUBLIC WORKS
141 PRYOR ST. ATLANTA, GA. 30303
404-730-7400 FAX: 404-224-0978

DRAWING NO.
501

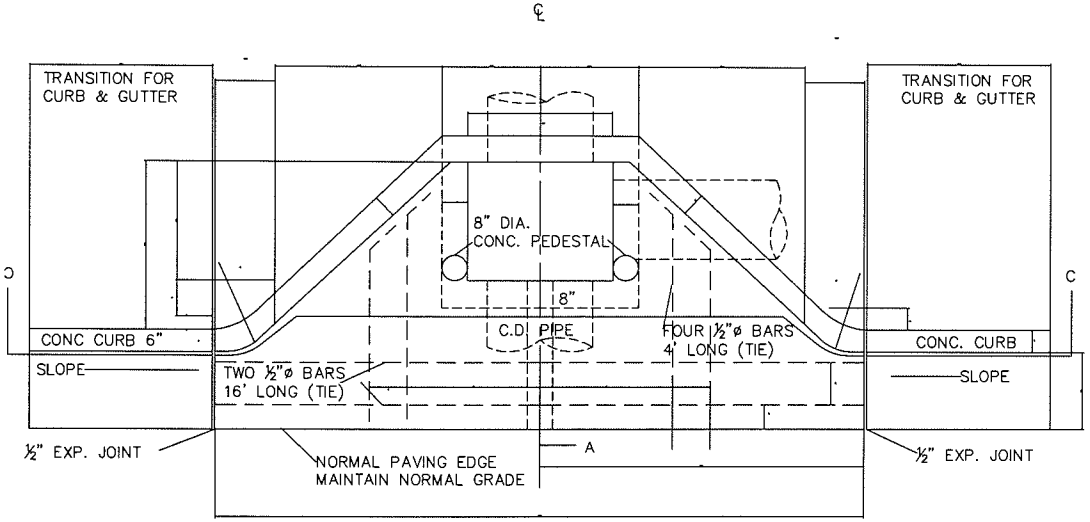

TOP OMITTED FOR CLARITY

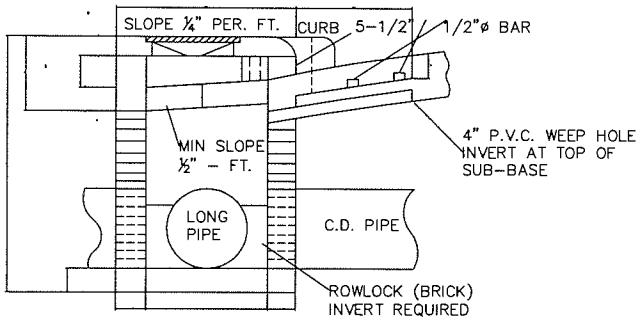

SECTION A–A

N.T.S.

NOTE:
ALL POURED–IN–PLACE CONC. TO BE CLASS "A" 3000 P.S.I.

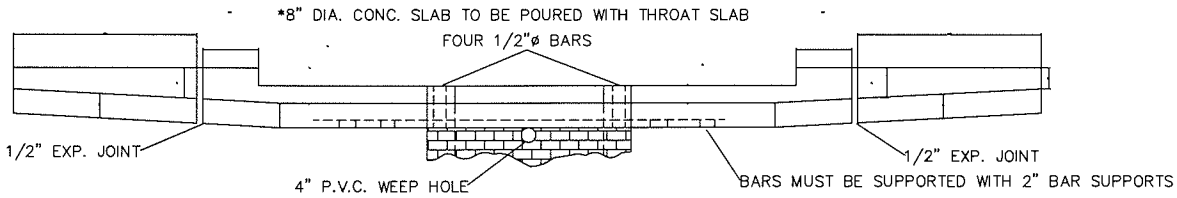

NOTE REQUIRED:
CONCRETE STRENGTH TEST REQUIRED FOR ALL POURED IN PLACE CONCRETE.

NOTE:
FOR ALL CATCH BASINS, 1/2" EXPANSION JOINT MATERIAL SHALL BE PLACED AROUND THE CATCH BASIN WHERE SIDEWALK OR MEDIAN PAVEMENT IS PLACED ADJACENT TO THE CATCH BASIN

SECTION C–C

(CAST IN PLACE)
N.T.S.

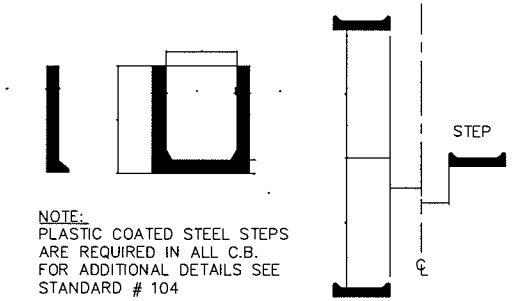

NOTE:
PLASTIC COATED STEEL STEPS ARE REQUIRED IN ALL C.B. FOR ADDITIONAL DETAILS SEE STANDARD # 104

ARRANGEMENT OF STEPS

IN ANY SUBDIVISION THE OPTION IS TO USE EITHER
ALL ONLINE CATCH BASINS
OR ALL ONE FOOT OFFSET CATCH BASINS.

ONE FOOT OFFSET REQUIRED IN ALL CUL–DE–SACS.

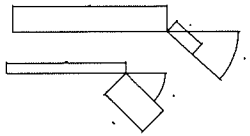

INSIDE DIAMETER OF PIPE IN INCHES	MINIMUM H
12–18	4'–10"
24	5'–6"
30	6'–2"

FULTON COUNTY STANDARD DETAIL 502
CATCH BASIN DOUBLEWING
ONE FOOT OFFSET
(FACE OF CURB)

DATE	REVISIONS	DATE	REVISIONS

DGS/DRN/CHKD: CMS
APPROVED: REW
DATE: 12–2–05

FULTON COUNTY

FULTON COUNTY PUBLIC WORKS
141 PRYOR ST. ATLANTA, GA. 30303
404–730–7400 FAX: 404–224–0978

DRAWING NO.
502

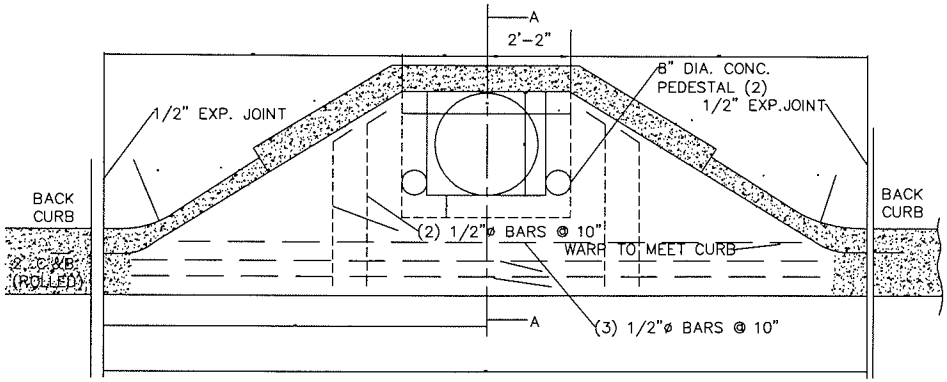

TOP OMITTED FOR CLARITY

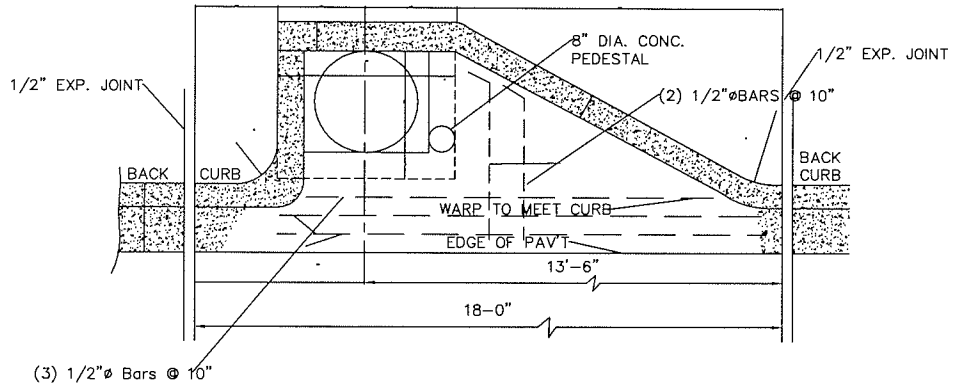

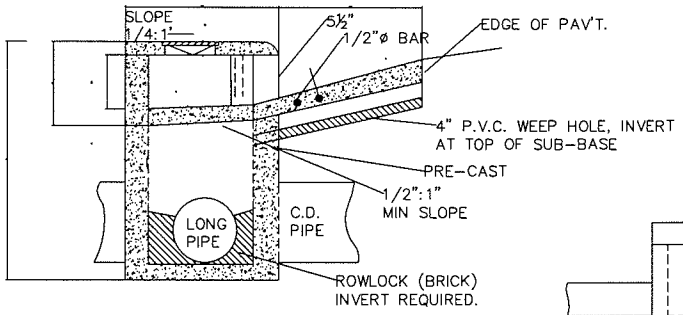

SECTION A-A

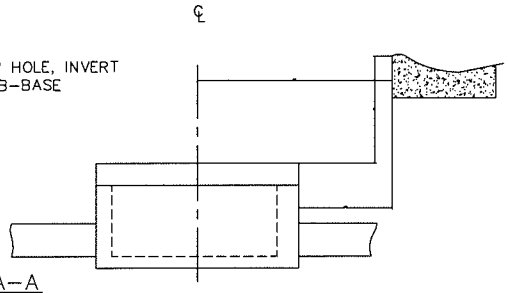

NOTES:

TOLERANCES –
1) OPENING FOR CATCH BASIN – 5 ½" – 7" MAX.
2) TOTAL DIMENSIONS FOR TOPS ± 2" (LENGTH) ± 2" (WIDTH)

ROWLOCK BRICK INVERTS ONLY

COLLAR WALLS – FULL 360° – REQUIRED AT ALL JUNCTURES OF STORM PIPE TO BOXES.

IF THE DESIGN OF CATCH BASIN DOES NOT MEET THE REQUIREMENTS – YOU MAY NOT USE PRE-CAST STRUCTURES AND THE CATCH BASIN MUST BE BUILT OUT OF BRICK.

PIPE SIZE	H
18	4'-10"
24	5'-6"
30	6'-2"

FULTON COUNTY STANDARD DETAIL 503
FOR PRIVATE DEVELOPMENT ONLY
STANDARD CATCH BASINS WITH ROLLED
CURB & GUTTER 10" OFFSET
(BACK OF CURB)

DATE	REVISIONS	DATE	REVISIONS

DGS/DRN/CHKD: CMS
APPROVED: REW
DATE: 12-2-05

FULTON COUNTY

FULTON COUNTY PUBLIC WORKS
141 PRYOR ST. ATLANTA, GA. 30303
404-730-7400 FAX: 404-224-0978

DRAWING NO.
503

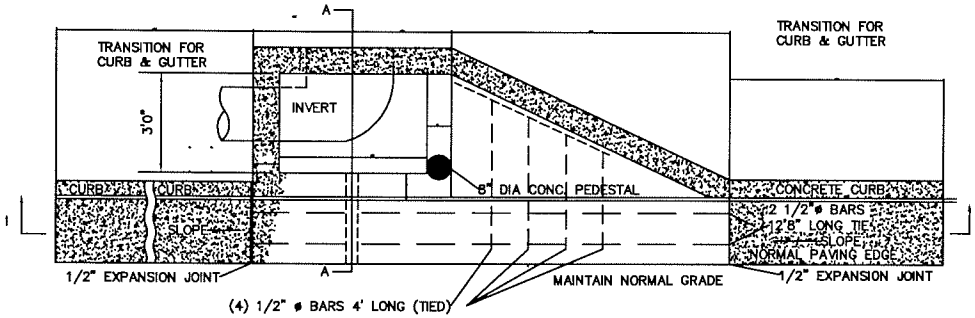

TOP OMITTED FOR CLARITY

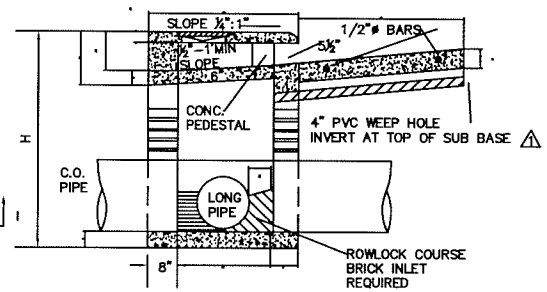

SECTION A-A

CLASS "A" 3000 PSI CONCRETE

N.T.S.

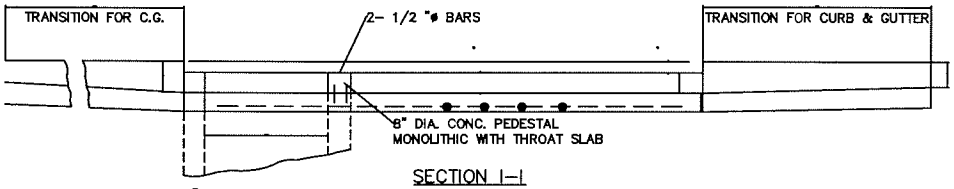

SECTION I-I

POURED IN PLACE

N.T.S.

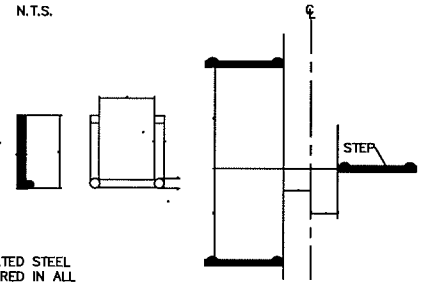

NOTE:
PLASTIC COATED STEEL STEPS REQUIRED IN ALL CATCH BASINS

FOR ADDITIONAL DETAILS SEE STANDARD #104

ARRANGEMENT OF STEPS

NOTE:
FOR ALL CATCH BASINS ½" EXPANSION JOINT MATERIAL SHALL BE PLACED AROUND THE CATCH BASIN WHERE SIDEWALK OR MEDIAN PAVEMENT IS PLACED ADJACENT TO THE CATCH BASIN

INSIDE DIAMETER OF PIPE IN INCHES	MINIMUM H
18"	4'-10"
24"	5'-6"
30"	6'-2"

△1 D.O.T. STANDARD #1033D IS ALLOWABLE ALTERNATIVE

FULTON COUNTY STANDARD DETAIL 504
SINGLE WING ON LINE CATCH BASIN (BRICK)

DATE	REVISIONS	DATE	REVISIONS

DGS/DRN/CHKD: CMS
APPROVED: REW
DATE: 12-2-05

FULTON COUNTY

FULTON COUNTY PUBLIC WORKS
141 PRYOR ST. ATLANTA, GA. 30303
404-730-7400 FAX: 404-224-0978

DRAWING NO.
504

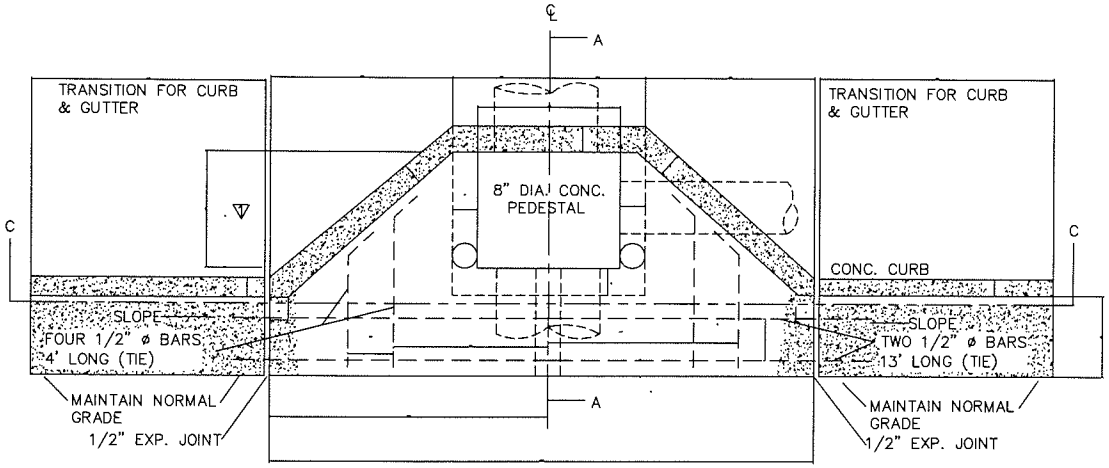

TOP OMITTED FOR CLARITY

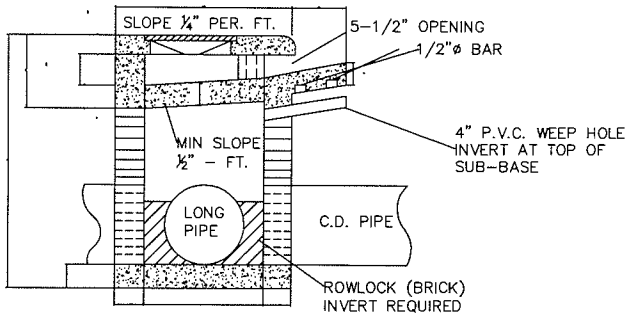

SECTION A-A

N.T.S.

NOTE:
ALL POURED-IN-PLACE CONC. TO BE CLASS "A" 3000 P.S.I.

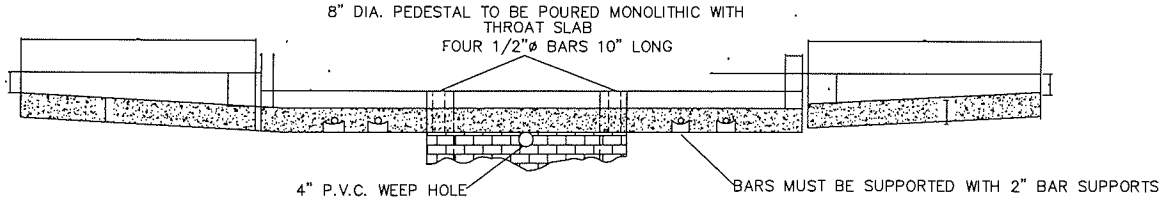

SECTION C-C

(CAST IN PLACE)
N.T.S.

NOTE:
OPENING AT CATCH BASIN SHALL BE BETWEEN 5 1/2" AND 7"

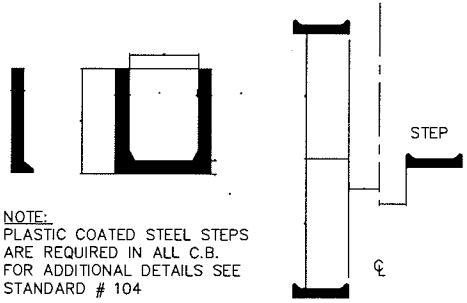

NOTE:
PLASTIC COATED STEEL STEPS ARE REQUIRED IN ALL C.B. FOR ADDITIONAL DETAILS SEE STANDARD # 104

ARRANGEMENT OF STEPS

2 G.D.O.T. STANDARD #1034D IS ALLOWABLE ALTERNATIVE

NOTE:
FOR ALL CATCH BASINS, 1/2" EXPANSION JOINT MATERIAL SHALL BE PLACED AROUND THE CATCH BASIN WHERE SIDEWALK OR MEDIAN PAVEMENT IS PLACED ADJACENT TO THE CATCH BASIN

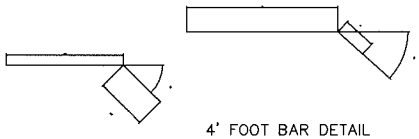

4' FOOT BAR DETAIL

INSIDE DIAMETER OF PIPE IN INCHES	MINIMUM H
18	4'-10"
24	5'-6"
30	6'-2"

FULTON COUNTY STANDARD DETAIL 505
CATCH BASIN DOUBLEWING
ONLINE

DATE	REVISIONS	DATE	REVISIONS

DGS/DRN/CHKD: CMS
APPROVED: REW
DATE: 12-2-05

FULTON COUNTY

FULTON COUNTY PUBLIC WORKS
141 PRYOR ST. ATLANTA, GA. 30303
404-730-7400 FAX: 404-224-0978

DRAWING NO. 505

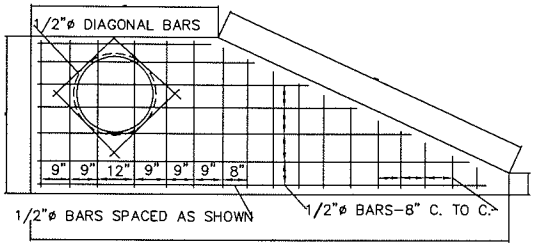

PLAN VIEW
N.T.S.

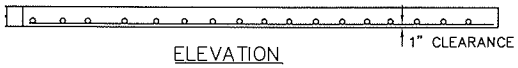

ELEVATION
N.T.S.

TOP SLAB TO HAVE WOOD FLOAT FINISH

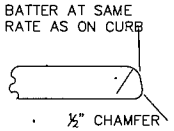

DETAIL OF TOP SLAB
N.T.S.

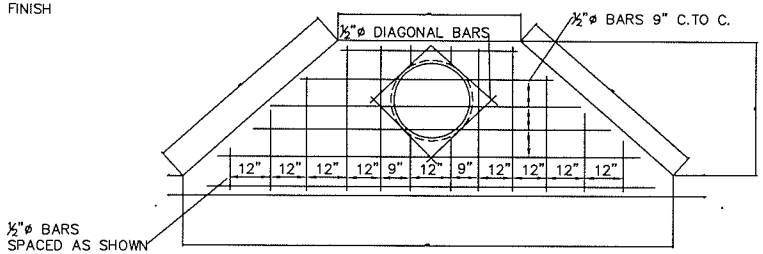

PLAN VIEW
N.T.S.

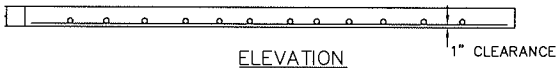

ELEVATION
N.T.S.

USE FOR OFFSET CATCH BASIN

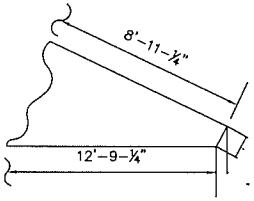

RING
N.T.S.

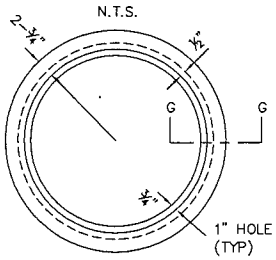

PLAN VIEW
N.T.S.

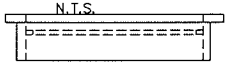

ELEVATION
N.T.S.

COVER
N.T.S.

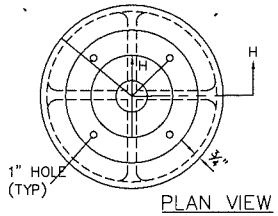

PLAN VIEW
N.T.S.

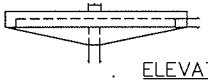

ELEVATION
N.T.S.

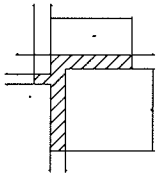

SECTION G-G
N.T.S.

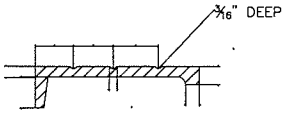

SECTION H-H
N.T.S.

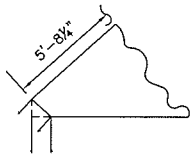

USE FOR OFFSET
CATCH BASIN

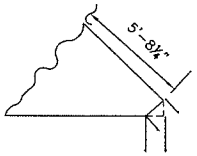

APPROXIMATE WEIGHTS—
CAST IRON RING 78 LBS.
CAST IRON COVER 63 LBS.

1 G.D.O.T. STANDARD #10330 IS ALLOWABLE ALTERNATIVE
G.D.O.T. STANDARD #1034D IS ALLOWABLE ALTERNATIVE.

FULTON COUNTY STANDARD DETAIL 506 CATCH BASIN TOPS		DATE	REVISIONS	DATE	REVISIONS	DGS/DRN/CHKD: CMS APPROVED: REW DATE: 12-2-05	FULTON COUNTY	FULTON COUNTY PUBLIC WORKS 141 PRYOR ST. ATLANTA, GA. 30303 404-730-7400 FAX: 404-224-0498	DRAWING NO. 506

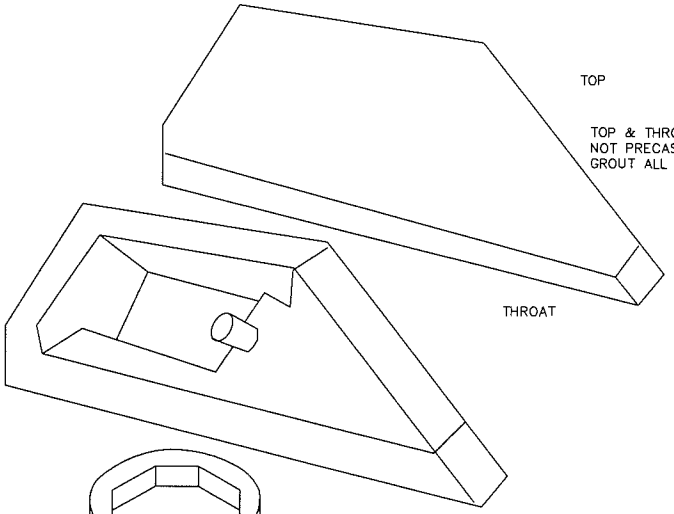

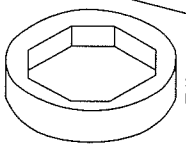

SQUARE TO ROUND ADAPTER

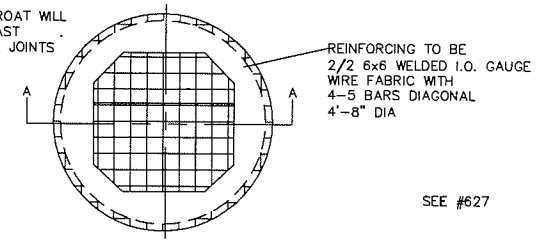

ROUND TO SQUARE ADAPTER

N.T.S.

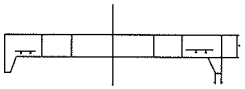

SECTION A-A

N.T.S.

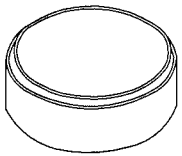

RISER SECTION (if req'd) AVAILABLE IN HEIGHTS 1'-0", 1'-6", 2'-0", 2'-6", 3'-0", 3'-6", 4'-0"

NOTE:
FOR ROLLED CURB & GUTTER, SEE STD. NO. 600 - B FOR BOX LOCATION.

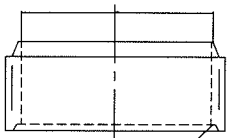

REINFORCING 2/2 6x6 WELDED WIRE FABRIC

RISER

N.T.S.

SEE #627

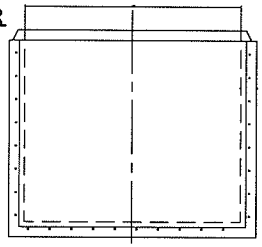

REINFORCING TO BE 3/3 6x8 WELDED WIRE FABRIC

NOTE:
STEPS TO BE INSTALLED ON 15" VERTICAL SPACING. SEE PRECAST MANHOLE STANDARD FOR SPECIFICATIONS.

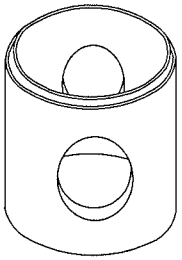

MONOLITHIC BASE HOLES MUST BE PRECAST

NOTE:
ALL CONCRETE SHALL BE 4000 PSI

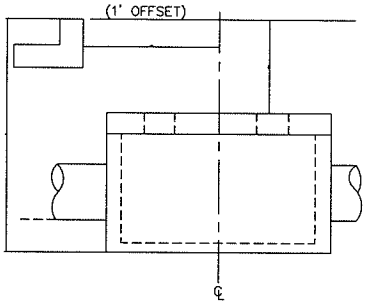

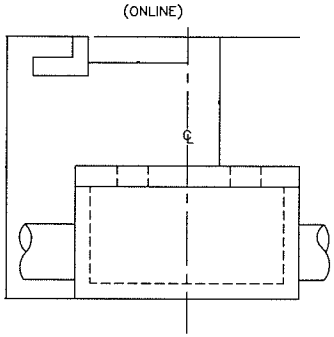

BASE HEIGHT	METAL PIPE	CONC PIPE	*H (MIN.)
4' DIA - 2'- 6"	18"	12"	5" - 0"
3' - 0"	24"	18"	5" - 6"
3' - 6"	30"	24"	6" - 0"
4' - 0"		30"	6' - 6"

*OTHERWISE BOX MUST BE BUILT OUT OF BRICK

NOTE:
CATCH BASIN SHALL BE INSTALLED WITH PIPE OPENING AS SPECIFIED.

FULTON COUNTY STANDARD DETAIL 507
STANDARD PRECAST
ROUND CATCH BASIN

DATE	REVISIONS	DATE	REVISIONS

DGS/DRN/CHKD: CMS
APPROVED: REW
DATE: 12-2-05

FULTON COUNTY

FULTON COUNTY PUBLIC WORKS
141 PRYOR ST. ATLANTA, GA. 30303
404-730-7400 FAX: 404-224-0498

DRAWING NO.
507

MIN ANGLE BETWEEN PIPES

PIPE SIZE	ANGLE "A"	CLOCK METHOD
18"	60°	2:00
24"	75°	2:30

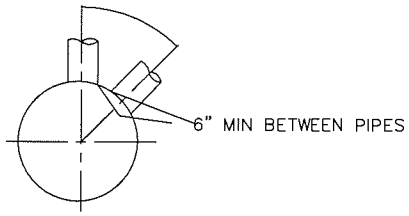

THE ABOVE TABLE IS BASED ON TWO PIPES OF EQUAL SIZE. WHEN ORDERING STATE ANGLE BY CLOCK METHOD. REQUEST ONE PIPE AT 12 O'CLOCK AND THE OTHER SIZE AND TIME AT WHATEVER ON THE JOB CONDITIONS REQUIRE.

℄ LOCATION OF CATCH BASIN BOX FROM STREET ℄

STREET WIDTH (BK. TO BK.)	ONLINE "D"	OFFSET "D"
24'	13'-8"	14'-8"
29'	16'-2"	17'-2"
39'	21'-2"	22'-2"
44'	23'-8"	24'-8"
52'	27'-8"	28'-8"

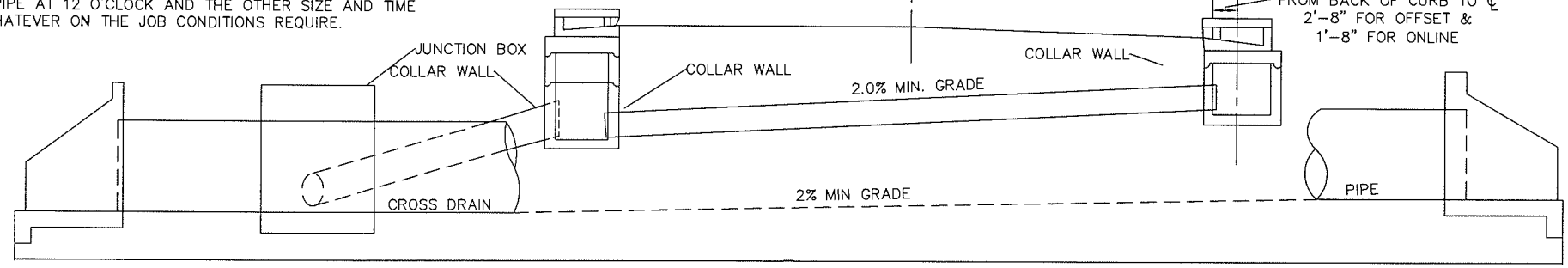

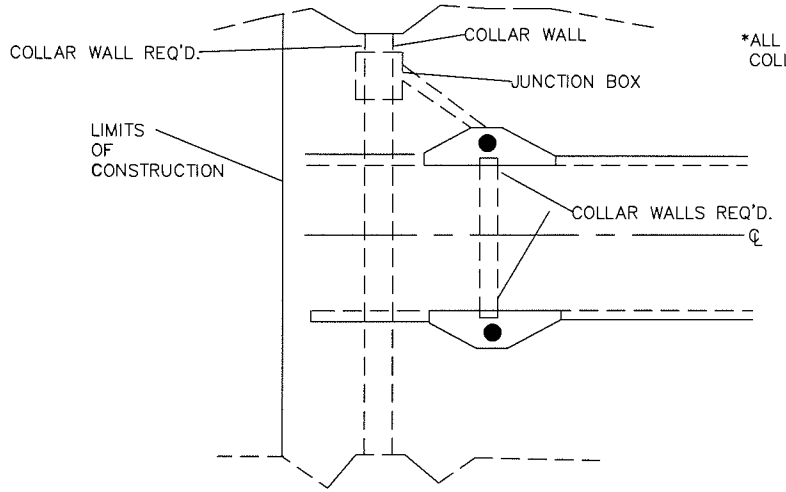

*ALL STORM PIPE WITHIN THE RIGHT OF WAY MUST BE CONCRETE. COLLAR WALLS REQUIRED.

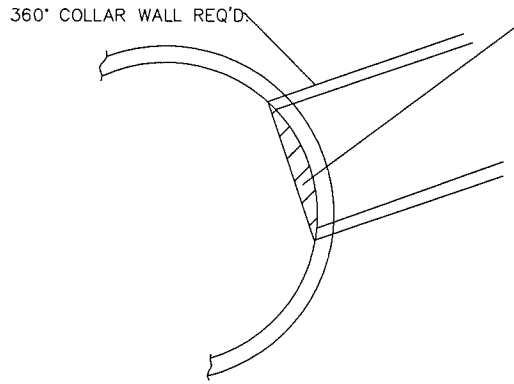

PIPE SHALL BE OF SUFFICIENT LENGTH FOR OUTSIDE DIAMETER TO REACH INTERIOR WALLS OF BOTH CATCH BASINS. UPON INSTALLATION, EXCESS PIPE SHALL BE REMOVED FLUSH TO INTERIOR WALL OF CATCH BASIN.

SEE G.D.O.T. STANDARD NO. 1033 D, E, F, OR 1034 D & E FOR PRECAST SQUARE CATCH BASIN

FULTON COUNTY STANDARD DETAIL 508
LOCATION
OF ROUND CATCH BASIN

DATE	REVISIONS	DATE	REVISIONS

DGS/DRN/CHKD: CMS
APPROVED: REW
DATE: 12-2-05

FULTON COUNTY

FULTON COUNTY PUBLIC WORKS
141 PRYOR ST. ATLANTA, GA. 30303
404-730-7400 FAX: 404-224-0498

DRAWING NO.
508

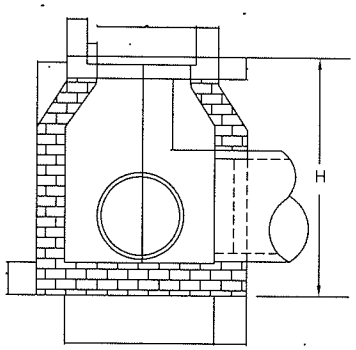

SECTION B–B
N.T.S.

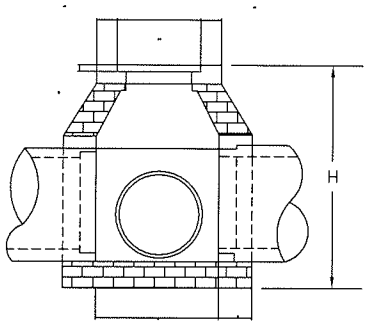

SECTION A–A
N.T.S.

NOTE:
REMOVE EXIST. TOP & THROAT OF CATCH BASIN
ADD BRICK COURSES FOR GRADE ADJUSTMENT
COMPLETE BY ADDING STANDARD MANHOLE
FRAME & COVER (#460 LBS. AND SET IN 8"
MIN. REINFORCED CONC. SLAB)

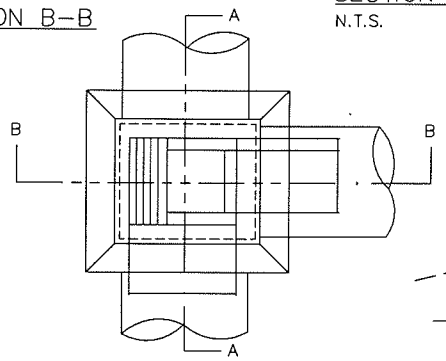

PLAN VIEW
N.T.S.

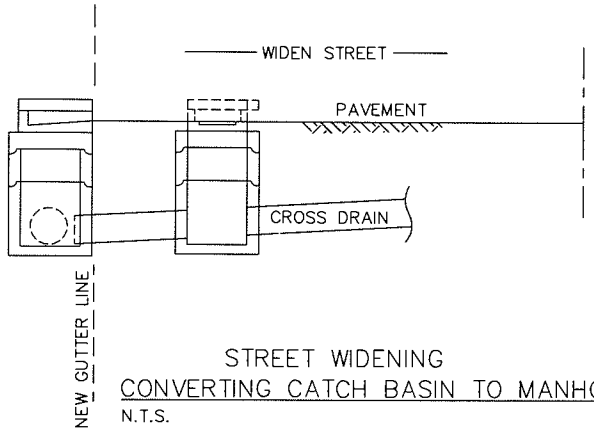

STREET WIDENING
CONVERTING CATCH BASIN TO MANHOLE
N.T.S.

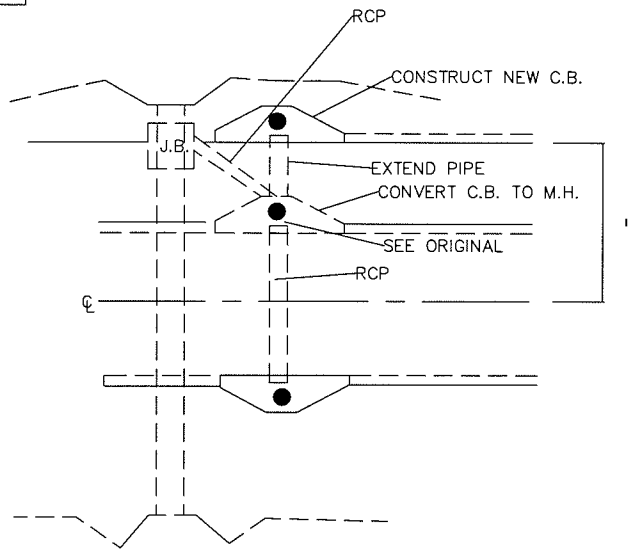

ALL PIPES WITHIN R/W SHALL BE RCP.
THIS INCLUDES PIPE PARALLELTO ROAD.
SEE STANDARD # 511
FOR DIMENSION TABLE

FULTON COUNTY STANDARD DETAIL 509 DROP INLETS, BRICK & CATCH BASIN EXTENSION		DATE	REVISIONS	DATE	REVISIONS	DGS/DRN/CHKD: CMS APPROVED: REW DATE: 12–2–05	FULTON COUNTY	FULTON COUNTY PUBLIC WORKS 141 PRYOR ST. ATLANTA, GA. 30303 404–730–7400 FAX: 404–224–0498	DRAWING NO. 509

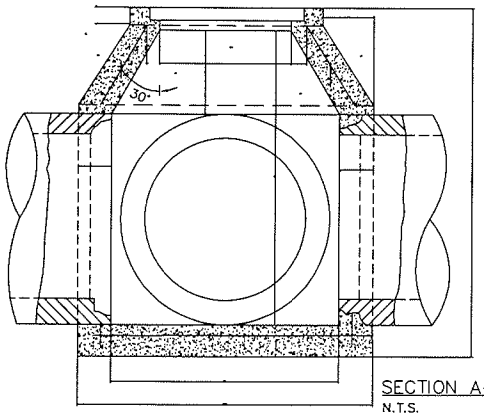

SECTION A–A
N.T.S.

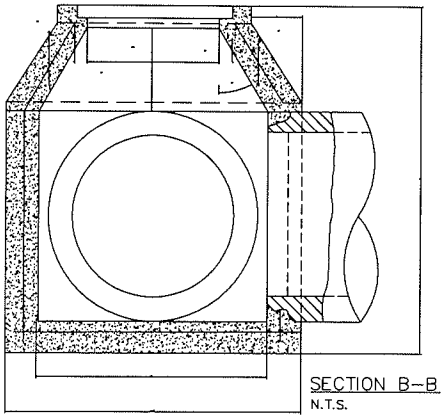

SECTION B–B
N.T.S.

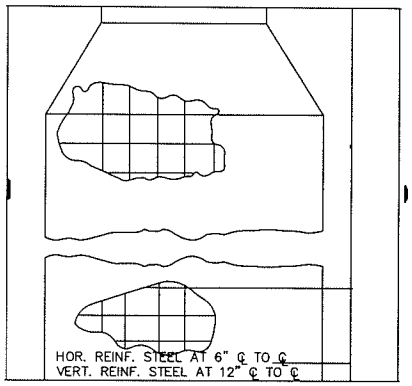

IN ALL DROP INLETS 1/2" ø BAR REINFORCING STEEL TO BE PLACED NOT MORE THAN 12" ℄ TO ℄ AND COVERED NOT LESS THAN 2".

TYPE A

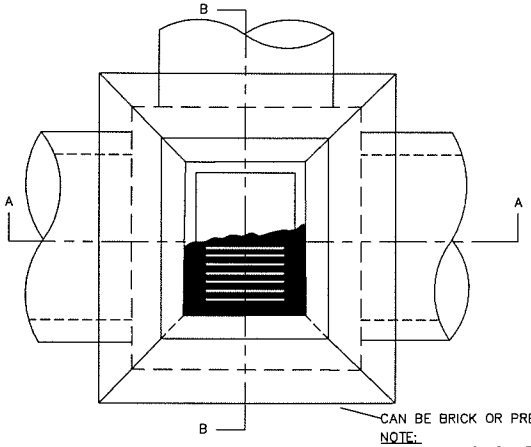

CAN BE BRICK OR PRECAST BOX

NOTE:
BRICK INVERTS REQUIRED AT ALL JUNCTION BOXES & DROP INLETS.

DETAIL OF CAST IRON GRATING
N.T.S.

APPROX. WT. 200 LB.

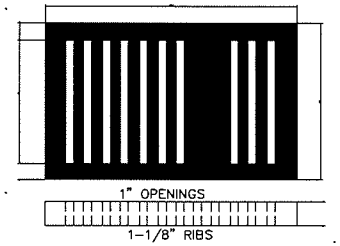

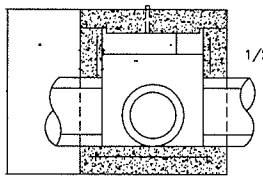

TYPE B

SEE SHEET NO. 511 FOR DIMENSIONS

FULTON COUNTY STANDARD DETAIL 510 DROP INLETS, CONCRETE, DETAILS FOR PAVED SECTIONS ONLY		DATE	REVISIONS	DATE	REVISIONS	DGS/DRN/CHKD: CMS APPROVED: REW DATE: 12–2–05	FULTON COUNTY	FULTON COUNTY PUBLIC WORKS 141 PRYOR ST. ATLANTA, GA. 30303 404–730–7400 FAX: 404–224–0498	DRAWING NO. 510

D	W1	MIN.–W2	W3	a	b	MIN–H	NORMAL W OR W1	TYPE B MIN–h	MIN–h
15"	2'–2"	2'–11"	2'–9"	0'–4 1/2"	0'–8"	3'–9 1/2"	2'–0"	2'–7 1/2"	3'–7 1/2"
18"	2'–2"	3'–2 1/2"	2'–9"	0'–4 1/2"	0'–8"	4'–1"	2'–0"	2'–10"	3'–10"
24"	2'–8"	3'–3"	3'–3"	0'–7 1/2"	1'–1 1/4"	4'–9"	3'–0"	3'–8"	4'–8"
30"	3'–7 1/4"	4'–0"	3'–10"	1'–0"	1'–9"	5'–10"	3'–6 1/2"	4'–2 1/2"	5'–10"
36"	4'–2"	6–0 1/2"	4'–9"	1'–4 1/2"	2'–2 1/4"	6'–11"	4'–2"	4'–10"	5'–10"
42"	4'–5"	7'–1 3/4"	5'–0"	1'–6"	2'–7 1/4"	8'–0 1/4"	4'–8 1/2"	5'–4 1/2"	6'–11 1/2"
48"	5'–0"	8'–2 3/4"	5'–7"	1'–9 1/2"	3'–1 1/4"	9'–1 1/4"	5'–3 1/2"	5'–11 1/2"	6'–11 1/2"
54"	5'–7"	9'–4"	6'–2"	2'–1'	3'–7 1/2"	10'–2 1/2"	5'–10"	6'–6"	7'–6"
60"	6'–2"	10'–5"	6'–9"	2'–4 1/2"	4'–1 1/2"	11'–3 1/4"	6'–4 1/2"	7'–0 1/2"	3'–0 1/2"
60"	6'–9"	11'–6"	7'–4"	2'–8"	4'–7 1/2"	12'–4 1/2"	6'–11"	7'–7"	8'–7"
72"	7'–4"	12'–7"	7'–11"	2'–11 1/2"	5'–2"	13'–5 1/2"	7'–5 1/2"	8'–1 1/2"	9'–1 1/2"

BRICK D.I.

D	W1	MIN.–W2	W3	a	b	MIN–H	NORMAL W OR W1	TYPE B MIN –h	MIN–h
15"	2'–0"	2'–6 1/2"	2'–7"	0'–3 1/2"	0'–6"	3'–3"	2'–0"	2'–7 1/2"	3'–9 1/2"
18"	2'–0"	2'–9 1/2"	2'–7"	0'–3 1/2"	0'–6"	3'–6"	2'–3"	2'–10"	4'–0"
24"	2'–8"	4'–1/2"	3'–3"	0'–7 1/2"	1'–1"	4'–9"	3'–0"	3'–8"	4' –10"
30"	3'–4"	5'–1 1/2"	3'–11"	0'–11 1/2"	1'–8"	5'–10"	3'–6 1/2"	4'–2 1/2"	5'–4 1/2"
36"	3'–10"	6–1 1/2"	4'–5"	1'–2 1/2"	2–1 1/4"	6'–10"	4'–2"	4'–10"	6'–0"
42"	4'–5"	7'–2 1/2"	5'–0"	1'–6"	2'–7 1/2"	7'–11"	4'–8 1/2"	5'–4 1/2"	6'–6 1/2"
48"	5'–0"	8'–3 1/2"	5'–7"	1'–9 1/2"	3'–1 1/4"	9'–0"	5'–3 1/2"	5'–11 1/2"	7'–1 1/2"
54"	5'–7"	9'–4 1/2"	6'–2"	2'–1 '	3'–7 1/4"	10'–1"	5' –10"	6'–6"	7'–8"
60"	6'–2"	10'–5 1/2"	6'–9"	2'–4 1/2"	4'–1 1/2"	11'–2"	6'–4 1/2"	7'–0 1/2"	8'–2 1/2"
60"	6'–9"	11'–6 1/2"	7'–4"	2'–8"	4'–7 1/2"	12'–3"	6'–11"	7'–7"	8'–9"
72"	7'–4"	12'–7 1/2"	7'–11"	2'–11 1/2"	5'–1 1/4"	13'–4"	7'–5 1/2"	8'–1 1/2"	9'–3"

CONCRETE D.I.

FULTON COUNTY STANDARD DETAIL 511
DROP INLETS DIMENSION

DATE	REVISIONS	DATE	REVISIONS

DGS/DRN/CHKD: CMS
APPROVED: REW
DATE: 12–2–05

FULTON COUNTY

FULTON COUNTY PUBLIC WORKS
141 PRYOR ST. ATLANTA, GA. 30303
404–730–7400 FAX: 404–224–0498

DRAWING NO. 511

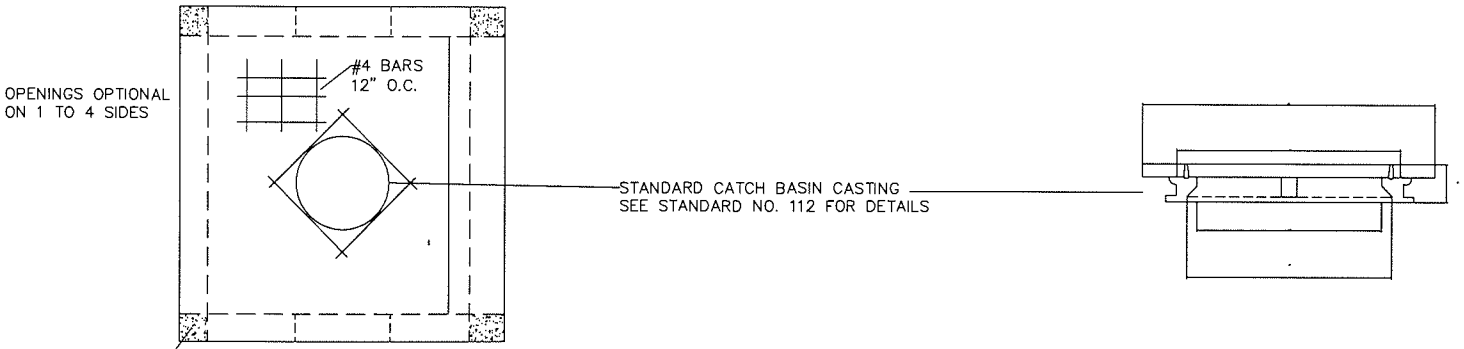

TOP VIEW
N.T.S.

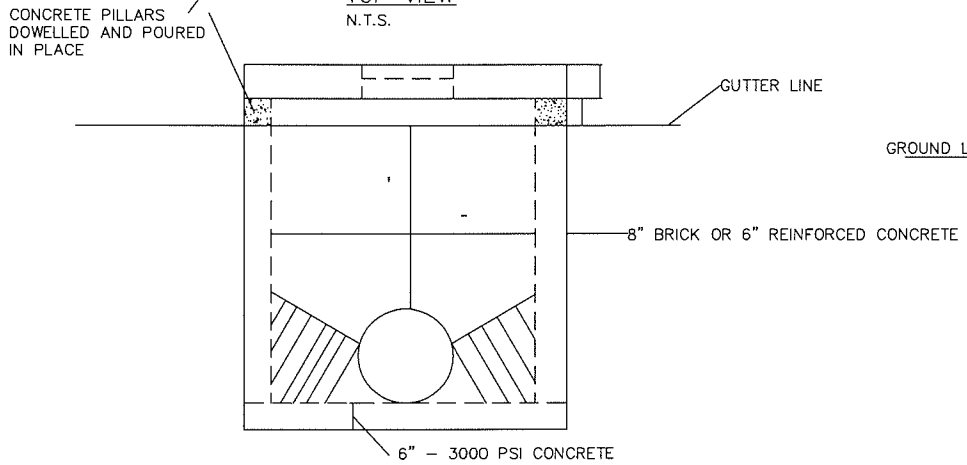

FRONT VIEW
N.T.S.

NOTE:
BRICK OR MASONRY INVERT REQUIRED (ROWLOCK).

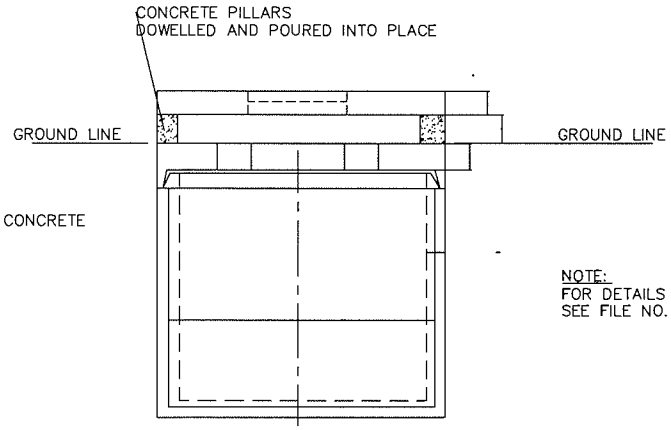

ALT. FRONT VIEW
FOR ROUND PRECAST BOX
N.T.S.

NOTE:
FOR DETAILS ON ROUND TO SQUARE ADAPTER,
SEE FILE NO. 507

FULTON COUNTY STANDARD DETAIL 512
DROP INLETS
WEIR TYPE

DATE	REVISIONS	DATE	REVISIONS

DGS/DRN/CHKD: CMS
APPROVED: REW
DATE: 12-2-05

FULTON COUNTY

FULTON COUNTY PUBLIC WORKS
141 PRYOR ST. ATLANTA, GA. 30303
404-730-7400 FAX: 404-224-0498

DRAWING NO.
512

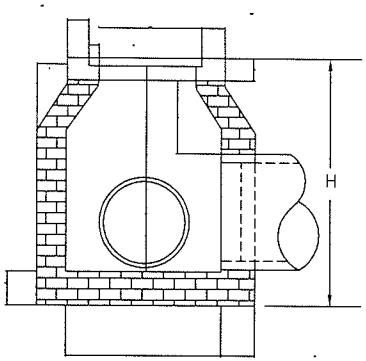

SECTION B–B
N.T.S.

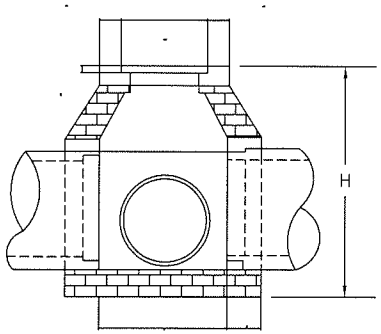

SECTION A–A
N.T.S.

NOTE:
REMOVE EXIST. TOP & THROAT OF CATCH BASIN
ADD BRICK COURSES FOR GRADE ADJUSTMENT
COMPLETE BY ADDING STANDARD MANHOLE
FRAME & COVER (#460 LBS. AND SET IN 8"
MIN. REINFORCED CONC. SLAB)

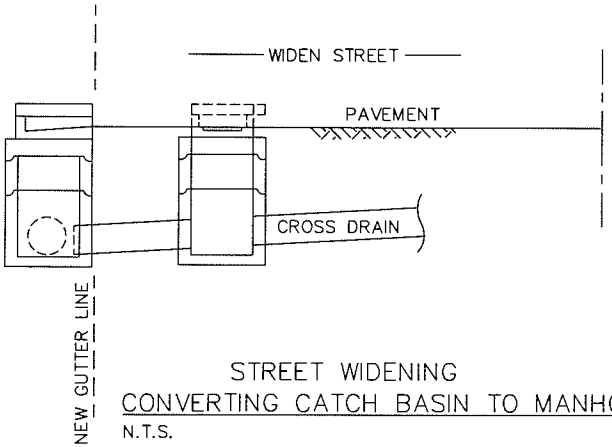

STREET WIDENING
CONVERTING CATCH BASIN TO MANHOLE
N.T.S.

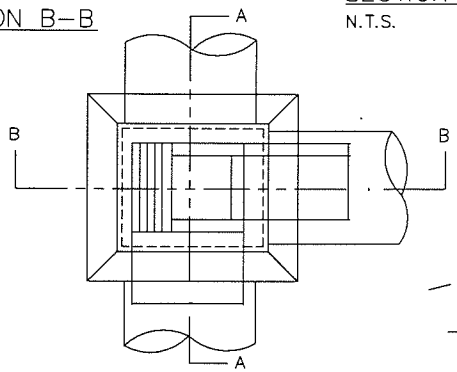

PLAN VIEW
N.T.S.

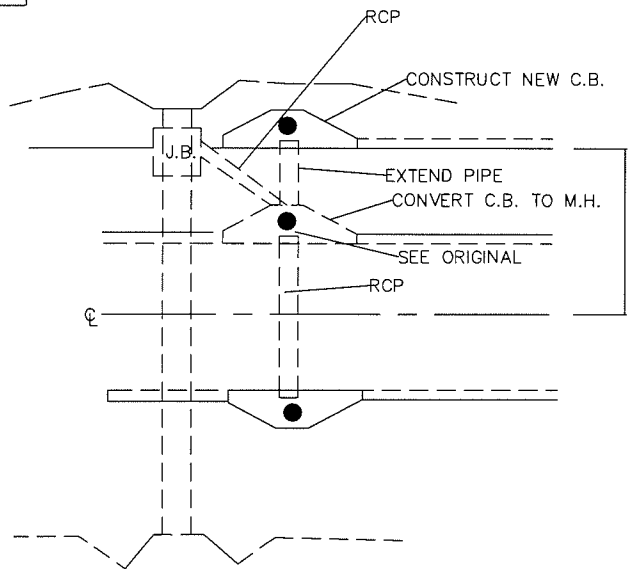

ALL PIPES WITHIN R/W SHALL BE RCP.
THIS INCLUDES PIPE PARALLELTO ROAD.
SEE STANDARD NO. 511
FOR DIMENSION TABLE

FULTON COUNTY STANDARD DETAIL 513 DROP INLETS, BRICK & CATCH BASIN EXTENSION		DATE	REVISIONS	DATE	REVISIONS	DGS/DRN/CHKD: CMS APPROVED: REW DATE: 12-2-05	FULTON COUNTY	FULTON COUNTY PUBLIC WORKS 141 PRYOR ST. ATLANTA, GA. 30303 404-730-7400 FAX: 404-224-0498	DRAWING NO. 513

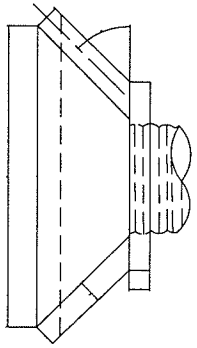

PLAN VIEW
N.T.S.

NOTE: COLLAR WALLS REQ'D. IN R/W

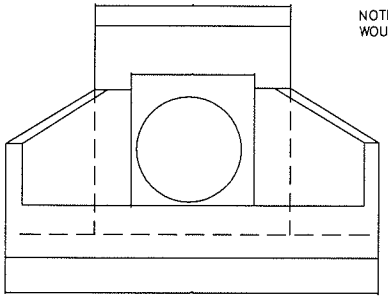

FRONT ELEVATION
N.T.S.

INLET HEADWALL

NOTE: AN ALTERNATE DESIGN FOR THE ENERGY DISSAPATOR WOULD BE ACCEPTABLE ONCE APPROVED BY FULTON COUNTY

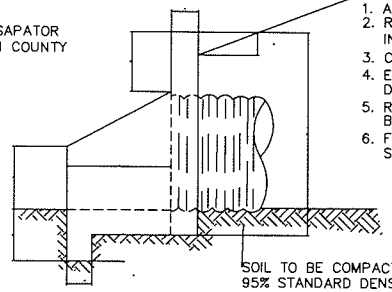

SIDE VIEW
N.T.S.

NOTES:
1. ALL CONC. SHALL BE 4000 P.S.I.
2. REINFORCEMENT STEEL SHALL BE ½"ø AT INTERMEDIATE GRADE.
3. CHAMFER ALL EXPOSED EDGES ¾"
4. ENERGY DISSIPATOR REQ. ON PIPES OVER 30" DIA. IF EXIT VELOCITY >6 F.P.S.
5. RIP RAP TO BE PLACED AT OUTLET, LENGTH TO BE 6xD.
6. FOR PIPES LARGER THAN 54" USE FULTON CO. STD.#515 OR G.D.O.T. STD. #1125.

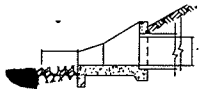

RIP-RAP DETAIL
N.T.S.

STONE & FILTER MATERIAL: RIP RAP		
VELOCITY	STONE SIZE	FILTER MATERIAL
<6 FT/SEC	10 -50 LBS.	1.5'
6 TO 8 FT/SEC.	20 - 100 LBS.	3"
8 TO 10 FT/SEC.	25 - 250 LBS.	4.5"
STONE OF DURABLE MATERIAL WEIGHING 150 LBS/FT3		

FRONT ELEVATION
N.T.S.

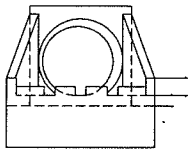

OUTLET HEADWALL

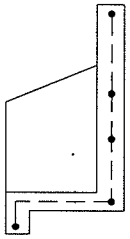

BASE & WALL SECTION
N.T.S.

NOTE: HEADWALLS OVER 30" TO HAVE STEEL ON 6" CENTERS EACHWAY (2" CLEARANCE TYP.)

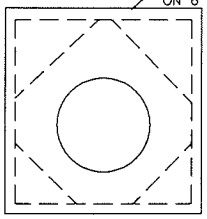

WALL SECTION
N.T.S.

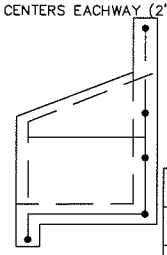

WING SECTION
N.T.S.

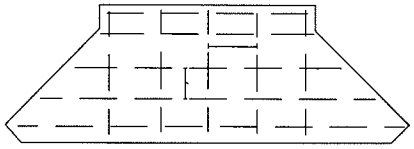

BASE SECTION
N.T.S.

TABLE I

HEADWALL DIMENSION FOR METAL PIPE*

INSIDE DIA. OF PIPE	W1	W2	H1	H2	D	E	WT.	SQ. FT. IN BASE AREA
18"	3' - 2"	4' - 3"	1' - 3"	3' - 2"	1' - 3"	1' - 9"	1,550	7.34
21", 24"	3" - 8"	5' - 3"	1' - 9"	3' - 8"	1' - 6"	2' - 7"	2,100	9.9
30"	4' - 2"	6' - 5"	2' - 0"	4' - 2"	1' - 10"	2' - 9"	2,850	13.5
36"	4' - 8"	7' - 7"	2' - 4"	4' - 8"	2' - 2"	3' - 3"	3,700	17.65
42", 48"	5' - 8"	10' - 1"	3' - 3"	5' - 8"	2' - 11"	4' - 3"	5,600	28.6
54"	6' - 8"	11' - 11"		6' - 8"	3' - 4"	5' - 3"	7,500	35.6

PLAN VIEW
N.T.S.

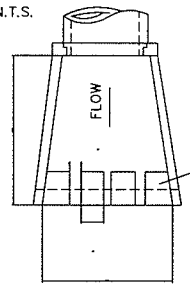

FULTON COUNTY STANDARD DETAIL 514
PRECAST CONCRETE
HEADWALL SYSTEM

DATE	REVISIONS	DATE	REVISIONS

DGS/DRN/CHKD: CMS
APPROVED: REW
DATE: 12-2-05

FULTON COUNTY

FULTON COUNTY PUBLIC WORKS
141 PRYOR ST. ATLANTA, GA. 30303
404-730-7400 FAX: 404-224-0498

DRAWING NO.
514

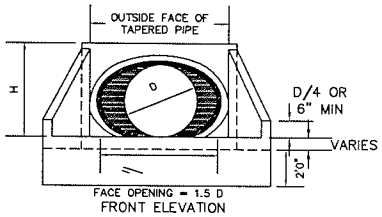

INLET HEADWALL WITH TAPERED PIPE
N.T.S.

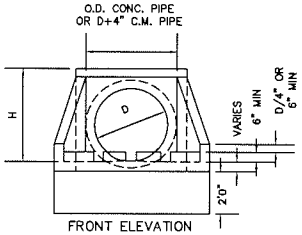

OUTLET HEADWALL
N.T.S.

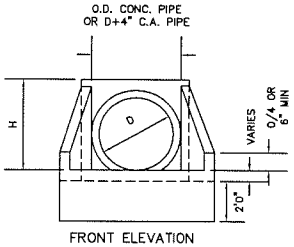

INLET HEADWALL
N.T.S.

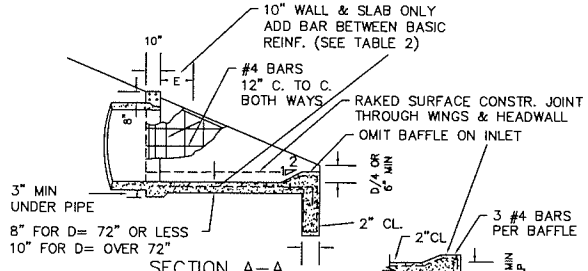

SECTION A–A
N.T.S.

10" SLAB
N.T.S.

D= INSIDE DIAMETER OF PIPE
H=D+PIPE WALL THICKNESS+8" FOR CONC. PIPE
H=D+10" MIN FOR C.M. PIPE

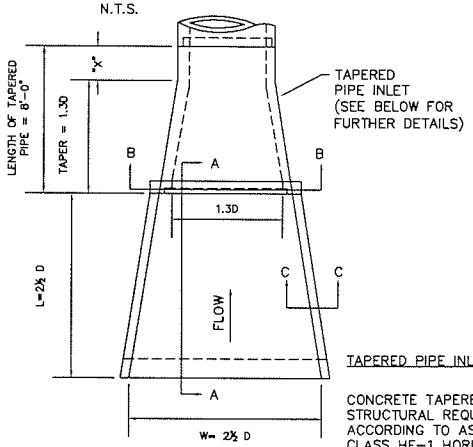

PLAN VIEW
N.T.S.

TAPERED PIPE INLET

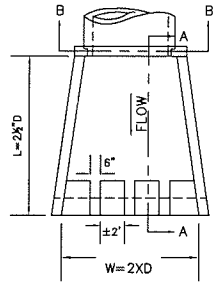

PLAN VIEW
N.T.S.

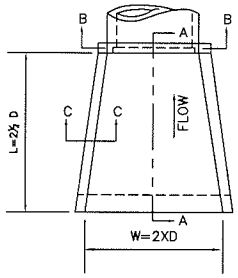

PLAN VIEW
N.T.S.

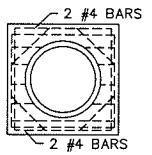

SECTION B–B
(SINGLE PIPE LINE)

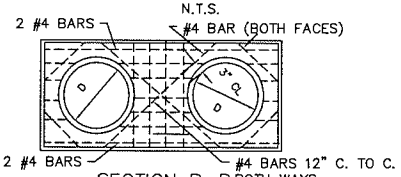

SECTION B–B
(MULTIPLE PIPE LINE)

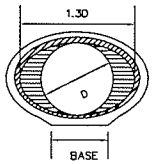

END VIEW
N.T.S.

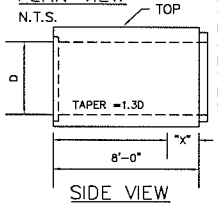

SIDE VIEW
N.T.S.

CONCRETE TAPERED PIPE: STRUCTURAL REQUIREMENTS WILL BE ACCORDING TO ASTM, C307 _ FOR CLASS HE-1 HORIZONTAL ELLIPTICAL PIPE.
CORRUGATED METAL: MATERIAL REQUIREMENTS TO MEET SEC. 844 (STEEL PIPE) OR SEC. 840 (ALUMINUM PIPE). C.M. PIPE WILL CONFORM TO THE SAME INTERNAL LINES AND DIMENSIONS SHOWN. DETAILS ARE SHOWN FOR CONCRETE.

TABLE 2

D	ADD'L BAR	E
84"	#4	5'
96"	#4	8'

TABLE 3 – TAPERED PIPE DIMENSIONS

D	1.5D	"X"	MIN. THICKNESS (INS.) COR. STEEL ①	COR. STEEL ②	COR. ALUM
24"	3.00	3.00	.064	—	.060
30"	3.75	4.25	.064	.064	.073
36"	4.50	3.50	.109	.064	.133
42"	5.25	2.75	.109	.064	.133
48"	6.00	2.00	.138	.064	.164
54"	6.75	1.25	.168	.064	—
60"	7.50	0.50	—	.075	—

① DENOTES 2 2/3" x 1/2"
② DENOTES 3" x 1" OR 123mm x 23mm CORRUGATION

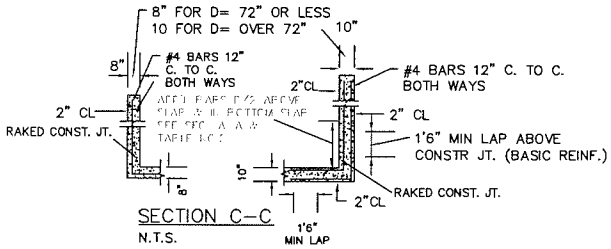

SECTION C–C
N.T.S.

NOTE:
1. ALTERNATE DESIGN FOR PIPES LARGER THAN 54" USE G.D.O.T STANDARD #1125.
2. RUBBLE MASONRY CONSTRUCTION NOT ALLOWED ON PIPES OVER 54".
3. AN ALTERNATE DESIGN FOR THE ENERGY DISSIPATOR WOULD BE ACCEPTED ONCE APPROVED BY FULTON COUNTY. SEE STANDARD #516

FULTON COUNTY STANDARD DETAIL 515
INLET HEADWALL – OUTLET
HEADWALL – INLET HEADWALL
WITH TAPERED PIPE\FOR PIPES 60" – 96" DIA.

DATE	REVISIONS	DATE	REVISIONS

DGS/DRN/CHKD: CMS
APPROVED: REW
DATE: 12-2-05

FULTON COUNTY

FULTON COUNTY PUBLIC WORKS
141 PRYOR ST. ATLANTA, GA. 30303
404-730-7400 FAX: 404-224-0498

DRAWING NO. 515

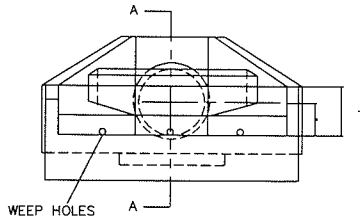

FRONT ELEVATION
N.T.S.

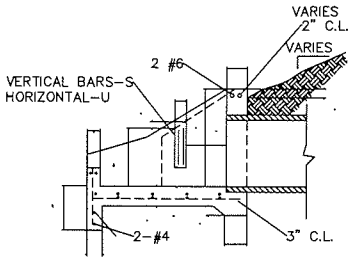

SECTION A-A
N.T.S.

D	E	F	G	H	J	K	L	N	V	W	T	R	S	U
18"	3'-0"	7'-6'	3'-0"	3'-0"	2'-0"	8"	8"	8"	2'-0"	1' -0"	6"	# 5 -12" O.C.	# 4-12" O.C.	# 4 -8" O.C.
21"	3'-4"	7'-9"		3'-3"					2'-0"					
24"	3'-8"	8'-0"	"	3'-6"	"	"	"	"	2'-0"	1'-6"	"	"	"	"
27"	3'-11"	8'-3"	"	4'-0"	"	"	"	"	2'-0"	2'-0"	"	"	"	"
30"	4'-2"	8'-6'	"	4'-0"	2'-1"	"	"	10"	2'-0"	2'-0"	"	"	"	"
36"	4'-8"	10'-0"	3'-6"	4'-6"	2'-3"	"	10"	"	2'-3"	2'-6"	"	"	"	"
42"	5'-3"	11'-6"	4'-0"	5'-0"	2'-9"	"	"	"	2'-4"	3'-0"	8"	"	"	# 5-8" O.C.
48"	5'-10"	13'-0"	4'-6"	5'-6"	3'-0"	"	"	12"	2'-6"	3'-6"	"	"	# 5 -12" O.C.	"
54"	6'-5"	14'-6"	5'-0"	6'-0"	3'-6"	9"	12"	"	2'-8"	5'-0'	"	# 6-8" O.C.	"	"
60"	7'-0"	16'-0"	5'-6"	6'-6"	4'-3"	"	"	"	2'-11"	"	"	"	"	"
66"	7'-7"	17'-6"	6'-0"	7'-0"	4'-6"	"	"	14"	3'-0"	"	"	"	"	"
72"	8'-2"	19'-0"	6'-6"	7'-0"	5'-8"	"	"	"	3'-2"	5' -6"	"	"	"	"

NOTES:
1. HEADWALL PARALLEL TO CENTER LINE OF HIGHWAY WITHIN RIGHT OF WAY SHALL BE FLARED-END (SEE G.D.O.T. STD #1120).
2. CONCRETE SHALL BE 3,000 PSI 28 DAYS STR.
3. WEEP HOLES SHALL BE 3" DIA. AT F/4 O.C.
4. RANDOM RUBBLE 3" TO 12" IN DIA.

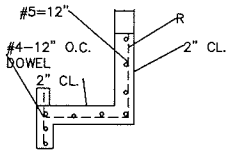

SECTION B-B
N.T.S.

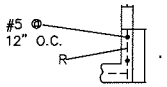

SECTION C-C
N.T.S.

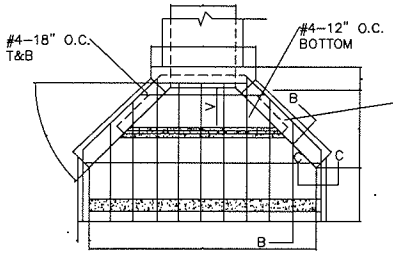

PLAN VIEW
N.T.S.

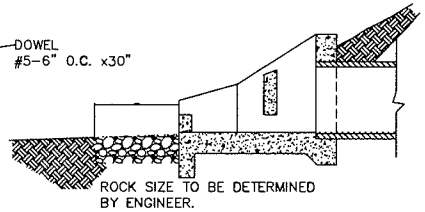

FULTON COUNTY STANDARD DETAIL 516 ENERGY DISSIPATOR ALTERNATE		DATE	REVISIONS	DATE	REVISIONS	DGS/DRN/CHKD: CMS APPROVED: REW DATE: 12-2-05	FULTON COUNTY	FULTON COUNTY PUBLIC WORKS 141 PRYOR ST. ATLANTA, GA. 30303 404-730-7400 FAX: 404-224-0498	DRAWING NO. 516

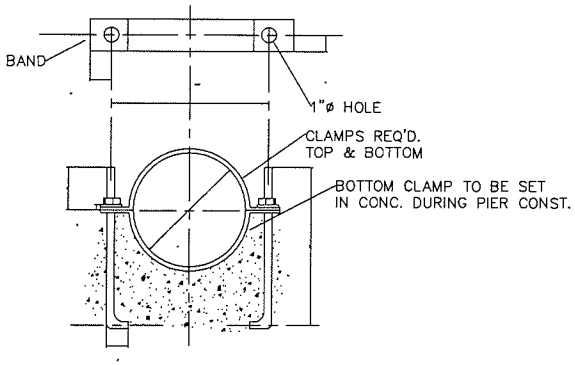

CLAMP DETAIL
N.T.S.

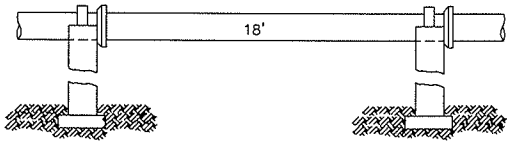

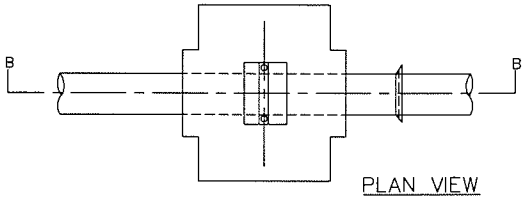

PLAN VIEW
N.T.S.

1. PIER LOCATION DETERMINED BY ENGR.
2. CONCRETE TO BE 3,000 P.S.I.
3. UNDER UNSTABLE CONDITIONS, ENG. PLANS FOR PIER DESIGN MUST BE SUBMITTED TO & APPROVED BY THE PUBLIC WORKS DEPT.
4. PIERS AT EVERY BELL.
5. ENG'R. TO SUBMIT DESIGN FOR
6. STEEL REINFORCEMENT TO BE A.S.T.M DESIGNATION A –15 – 54T UNLESS OTHERWISE SPECIFIED, BENDS IN BARS TO CONFORM TO A.C.I. STANDARD.

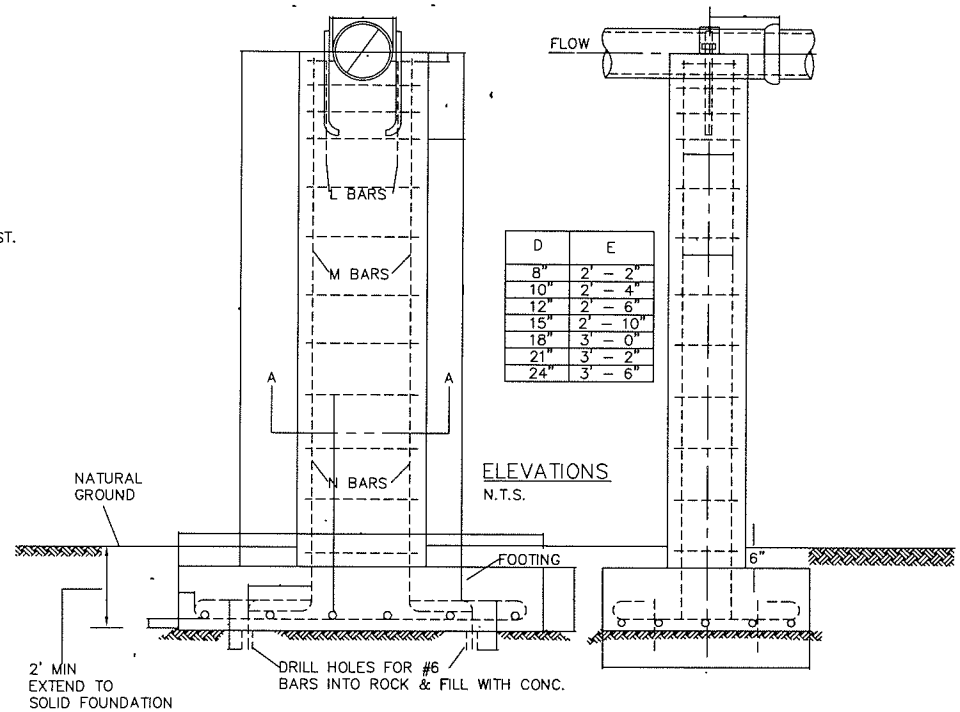

D	E
8"	2' – 2"
10"	2' – 4"
12"	2' – 6"
15"	2' – 10"
18"	3' – 0"
21"	3' – 2"
24"	3' – 6"

ELEVATIONS
N.T.S.

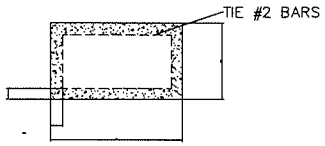

SECTION A–A
N.T.S.

FULTON COUNTY STANDARD DETAIL 517
CONCRETE PIER
&
FOOTING DETAIL

DATE	REVISIONS	DATE	REVISIONS

DGS/DRN/CHKD: CMS
APPROVED: REW
DATE: 12–2–05

FULTON COUNTY

FULTON COUNTY PUBLIC WORKS
141 PRYOR ST. ATLANTA, GA. 30303
404–730–7400 FAX: 404–224–0498

DRAWING NO.
517

STANDARD REINFORCED PIER

FOOTING DIMENSIONS AND REINFORCEMENT								PIER REINFORCEMENT							
PIER	FOOTING			NO. OF #5 BARS EA. DIRECTION				BARS M			BARS N				
H	A	B	C	8" & 10"D.	12" & 14"D.	16" & 18"D.	20" & 24"D.	NO.	SIZE	LENGTH	NO.	SIZE	LENGTH	X	Y
0'-4'	3'-0"	6'-0"	1'-3"	5	5	5	5	NONE			6	#6	H + 2 ' -0"	1'-9"	H + 10"
5'	3'-2"	6'-2"	1'-3"	5	5	5	5	NONE			6	#6	H + 2 ' -0"	1'-9"	H + 10"
6'	3'-4"	6'-4"	1'-3"	5	5	5	5	4	#6	4'-10"	6	#6	5'-4"	1'-9"	4'-2"
7'	3'-6"	6'-6"	1'-3"	5	5	5	6	4	#6	5'-10"	6	#6	5'-4"	1'-9"	4'-2"
8'	3'-8"	6'-8"	1'-3"	5	5	5	6	4	#6	7'-10"	6	#6	5'-4"	1'-9"	4'-2"
9'	3' -10"	6'-10"	1'-3"	5	5	6	7	4	#6	8'-10"	6	#6	5'-4"	1'-9"	4'-2"
10'	4'-0"	7'-0"	1'-3"	5	5	6	7	4	#6	9'-10"	6	#6	5'-4"	1'-9"	4'-2"
11'	4'-2"	7'-2"	1'-3"	5	5	7	8	4	#6	10'-10"	6	#6	5'-4"	1'-9"	4'-2"
12'	4'-4"	7'-4"	1'-3"	5	5	7	8	4	#6	11'-10"	6	#6	5'-4"	1'-9"	4'-2"
13'	4'-6"	7'-6"	1'-6"	5	6	7	8	4	#6	12'-10"	6	#6	5'-7"	1'-9"	4'-5"
14'	4'-8"	7'-8"	1'-6"	6	6	8	9	4	#6	13'-10"	6	#6	5'-7"	1'-9"	4'-5"
15'	4'-10"	7'-10"	1'-6"	6	6	8	9	4	#6	14'-10"	6	#6	5'-7"	1'-9"	4'-5"
16'	5'-0"	8'-0"	1'-6"	6	6	8	9	4	#6	15'-10"	6	#6	5'-7"	1'-9"	4'-5"
17'	5'-2"	8'-2"	1'-6"	6	7	9	10	4	#6	16'-10"	6	#6	5'-7"	1'-9"	4'-5"
18'	5'-4"	8'-4'	1'-6"	7	8	9	10	4	#6	17'-10"	6	#6	5'-7"	1'-9"	4'-5"
19'	5'-6"	8'-6"	1'-6"	7	8	10	11	4	#6	18'-10"	6	#6	5'-7"	1'-9"	4'-5"
20'	5'-8"	8'-8"	1'-6"	7	9	10	12	4	#6	19'-10"	6	#6	5'-7"	1'-9"	4'-5"
21'	5'-10"	8'-10"	1'-6"	8	9	11	12	4	#6	19'-10"	6	#6	6'-0"	1'-9"	4'-9'
22'	6'-0"	9'-0"	1'-6"	9	10	12	13	4	#6	19'-10"	6	#6	7'-0"	1'-9"	5'-9'
23'	6'-2"	9'-2"	1'-6"	9	10	12	13	4	#6	19'-10"	6	#6	8'-0"	1'-9"	6'-9'
24'	6'-4"	9'-4"	1'-6"	10	11	13	15	4	#6	19'-10"	6	#6	9'-0"	1'-9"	7'-9'
25'	6'-6"	9'-6"	1'-6"	10	11	14	16	4	#6	19'-10"	6	#6	11'-0"	1'-9"	9'-3"
26'	6'-8"	9'-8"	1'-6"	11	12	15	16	4	#6	19'-10"	6	#6	12'-0"	1'-9"	10'-3"
27'	6'-10"	9'-10"	1'-6"	12	13	16	17	4	#6	19'-10"	6	#6	13'-0"	1'-9"	11'-3'
28'	7'-0"	10'-0"	1'-6"	12	13	16	18	4	#6	19'-10"	6	#6	14'-0"	1'-9"	12'-3"

BARS L	H	NO.-SIZE-LENGTH		
	0'-4"	NONE		
	4'-28"	2	#6	2'-6"

FULTON COUNTY STANDARD DETAIL 518
CONCRETE PIER
&
FOOTING DETAIL

DATE	REVISIONS	DATE	REVISIONS

DGS/DRN/CHKD: CMS
APPROVED: REW
DATE: 12-2-05

FULTON COUNTY

FULTON COUNTY PUBLIC WORKS
141 PRYOR ST. ATLANTA, GA. 30303
404-730-7400 FAX: 404-224-0498

DRAWING NO. 518

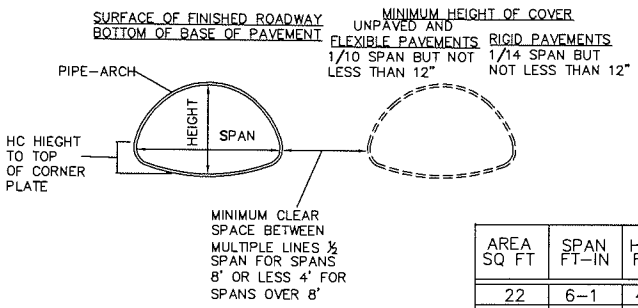

AREA SQ FT	SPAN FT-IN	HEIGHT FT-IN	FT-IN	* DIA INCHES	HEIGHT OF COVER (FEET)												
					1	2	3	4	5-7	8	9	10	11	12	13	14	15
					MINIMUM THICKNESS US STD GAGE												
22	6-1	4-7	2-4	66"	12	12	12	12	12	12	12	12	12	12	12	12	12
24	6-4	4-9	2-1	69"	12	12	12	12	12	12	12	12	12	12	12	12	10
26	6-9	4-11	2-5	72"	10	12	12	12	12	12	12	12	12	12	12	10	10
28	7-0	5-1	2-4	75"	10	12	12	12	12	12	12	12	12	12	12	10	10
31	7-3	5-3	2-1	78"	10	10	12	12	12	12	12	12	12	12	10	10	10
33	7-6	5-5	2-4	81"	10	10	12	12	12	12	12	12	12	12	10	10	10
35	7-11	5-7	2-2	84"	10	10	10	12	12	12	12	12	12	10	10	10	10
38	8-2	5-9	2-0	87"	10	10	10	12	12	12	12	12	12	10	10	10	10
40	8-7	5-11	2-4	90"	10	10	10	10	10	10	10	10	10	10	10	10	8
43	8 -10	6-1	2-2	93"	10	10	10	10	10	10	10	10	10	10	10	8	8
46	9-4	6-3	2-5	96"	8	10	10	10	10	10	10	10	10	10	8	8	8
49	9-6	6-5	2-4	99"	8	10	10	10	10	10	10	10	10	10	8	8	8
52	9-9	6-7	2-2	102"	8	8	10	10	10	10	10	10	10	8	8	8	7
55	10-3	6-9	2-5	105"	8	8	10	10	10	10	10	10	10	8	8	8	7
58	10-8	6-11	2-10	108"	8	8	8	10	10	10	10	10	10	8	8	8	7
61	10-11	7-1	2-7	111"	8	8	8	10	10	10	8	8	8	8	7	7	5
64	11-5	7-3	2-10	114"	7	8	8	8	10	10	8	8	8	8	7	7	5
67	11-7	7-5	2-8	117"	7	8	8	8	10	10	8	8	8	8	7	7	5
71	11-10	7-7	2-6	120"	7	8	8	8	8	8	8	8	8	7	5	5	3
74	12-4	7-9	2-10	125"	7	7	8	8	8	8	8	8	7	7	5	5	3
78	12-6	7-11	2-8	126"	7	7	8	8	8	8	8	8	7	7	5	5	3
81	12-8	8 -1	2-6	129"	7	7	8	8	8	8	8	8	7	7	5	5	3
85	12-10	8-4	2-4	132"	5	7	8	8	8	8	8	7	7	5	5	3	1
89	13-5	8-5	2-7	135"	5	5	7	8	8	8	7	7	5	5	5	3	1
93	13-11	8-7	2-11	138"	5	5	7	7	8	7	7	5	5	3	3	1	1
97	14-1	8-9	2-10	141"	5	5	7	7	8	7	7	5	5	3	3	1	1
101	14-3	8-11	2-7	144"	3	5	5	7	7	7	5	5	5	3	3	1	1
105	14-10	9-1	2-11	147"	3	5	5	7	7	7	5	3	3	1	1		
109	15-4	9-3	3-2	150"	3	3	5	7	7	7	5	3	3	1	1		
113	15-6	9-5	3-0	153"	3	3	5	5	7	7	5	3	3	1	1		
118	15-8	9-7	2-10	156"	3	3	5	5	7	7	5	3	3	1	1		
122	15-10	9 -10	2-8	159"	1	3	5	5	7	5	3	3	1	1			
126	16-5	9-11	3-0	162"	1	3	3	5	5	5	3	1	1				
131	16-7	10-1	2-10	165"	1	3	3	5	5	5	3	1	1				
26	5-8	6-6	1-3	78"	12	12	12	12	12	12	12	12	12	12	12	12	12
32	5-10	7-8	1-3	87"	12	12	12	12	12	12	12	12	12	12	12	12	12

NOTES:
1. SPECIFICATIONS – GEORGIA STANDARD
2. DESIGN DATA – H-20 LIVE LOAD
3. GAGES SHOWN ARE MINIMAL STRUCTURAL REQUIREMENTS FOR USE WITH ADEQUATE BACKFILL.
4. FOR END FINISH, SHAPE OR CONDITION OTHER THAN SHOWN, SEE SPECIAL DESIGN.

END FINISH

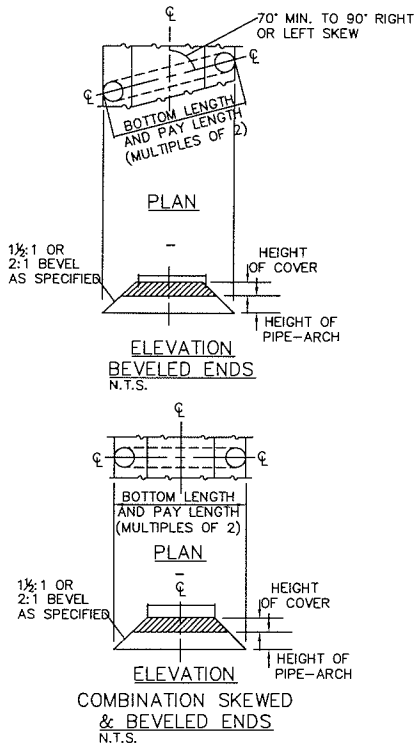

FULTON COUNTY STANDARD DETAIL 519 STRUCTURAL PLATE PIPE-ARCH CULVERT		DATE	REVISIONS	DATE	REVISIONS	DGS/DRN/CHKD: CMS APPROVED: REW DATE: 12-2-05	FULTON COUNTY	FULTON COUNTY PUBLIC WORKS 141 PRYOR ST. ATLANTA, GA. 30303 404-730-7400 FAX: 404-224-0498	DRAWING NO. 519

NORMAL BACKFILL
BACKFILL, AS SHOWN BY THE BROKEN LINE SECTIONS, SHALL CONSIST OF PLACING COMPACTABLE SOIL IN 6" (LOOSE) LAYERS AND COMPACTING EACH LAYER TO 100% MAXIMUM DENSITY ON BOTH SIDES OF THE PIPE FOR ITS FULL LENGTH. MEASUREMENT AND PAYMENT WILL BE MADE UNDER ROADWAY EXCAVATION ITEMS FOR FORMATION OF EMBANKMENT.
NORMAL EMBANKMENT SHALL BE PLACED A MINIMUM OF 12" WIDE ON EACH SIDE OF THE PIPE AND A MINIMUM OF 12' OVER THE PIPE AND COMPACTED TO THE REQUIRED DENSITY BEFORE EQUIPMENT IS ALLOWED TO CROSS.
AFTER BACKFILL HAS BEEN COMPACTED, THE BALANCE OF THE FILL UP TO GRADE LINE SHALL BE CONSTRUCTED IN ACCORDANCE WITH EMBANKMENT SPECIFICATIONS.

EMBANKMENT TO BE PLACED TO THIS ELEVATION BEFORE TRENCH FOR IMPERFECT BACKFILL IS EXCAVATED.

GRADE LINE OR TOP OF EASEMENT

IMPERFECT BACKFILL
IMPERFECT BACKFILL WILL BE USED WITH CONCRETE PIPE ONLY, WHERE THE HEIGHT OF EMBANKMENT OVER PIPE IS 30 FEET OR MORE. CROSS HATCHED AREA REPRESENTS LIMITS OF STRUCTURE EXCAVATION AND IMPERFECT TRENCH BACKFILL MATERIAL. TYPE III MEASUREMENT AND PAYMENT WILL BE CONFINED TO THESE LIMITS. SEE CROSS SECTION BELOW FOR LENGTH OF IMPERFECT BACKFILL TRENCH.

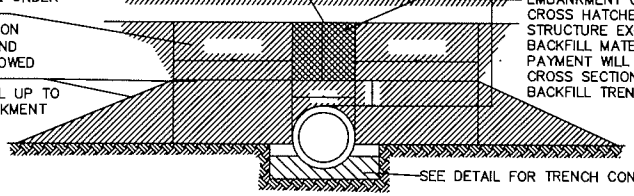

SEE DETAIL FOR TRENCH CONSTRUCTION

LONGITUDINAL SECTION OF IMPERFECT BACKFILL AND BACKFILL METHODS
N.T.S.

CROSS SECTION OF IMPERFECT TRENCH BACKFILL
N.T.S.

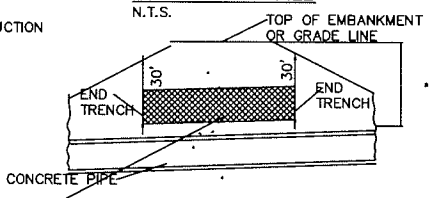

NOTE: CROSS HATCHED AREA REPRESENTS CONSTRUCTION LIMITS OF MEASUREMENT FOR STRUCTURE EXCAVATION AND IMPERFECT TRENCH BACKFILL MATERIAL, TYPE IV SEE LONGITUDINAL SECTION ABOVE.

DETAIL OF TRENCH CONSTRUCTION
N.T.S.

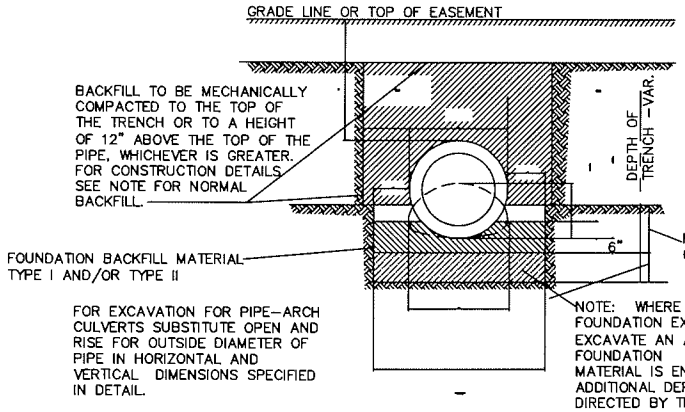

BACKFILL TO BE MECHANICALLY COMPACTED TO THE TOP OF THE TRENCH OR TO A HEIGHT OF 12" ABOVE THE TOP OF THE PIPE, WHICHEVER IS GREATER. FOR CONSTRUCTION DETAILS SEE NOTE FOR NORMAL BACKFILL.

FOUNDATION BACKFILL MATERIAL TYPE I AND/OR TYPE II

FOR EXCAVATION FOR PIPE-ARCH CULVERTS SUBSTITUTE OPEN AND RISE FOR OUTSIDE DIAMETER OF PIPE IN HORIZONTAL AND VERTICAL DIMENSIONS SPECIFIED IN DETAIL.

NOTE: WHERE AN INCOMPRESSIBLE FOUNDATION EXISTS, EXCAVATE AN ADDITIONAL 6". WHERE AN UNSTABLE FOUNDATION MATERIAL IS ENCOUNTERED, EXCAVATE AN ADDITIONAL DEPTH AS DIRECTED BY THE ENGINEER.

DETAIL OF TRENCH CONSTRUCTION FOR SIDE DRAIN AND MEDIAN DRAIN PIPE
N.T.S.

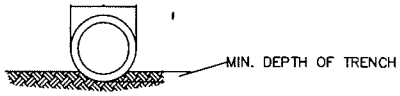

NOTE: THE PIPE SHALL BE BEDDED TO TIME AND GRADE IN A FIRM FOUNDATION SHAPED TO FIT THE LOWER PART OF THE PIPE EXTERIOR. WHERE ROCK, EXISTS, EXCAVATE AND BACKFILL WITH COMPRESSIBLE MATERIAL (UNCLASSIFIED EXCAVATION) A MINIMUM OF 6" BELOW THE PIPE.

SPACING FOR MULTIPLE PIPE CULVERTS
N.T.S.

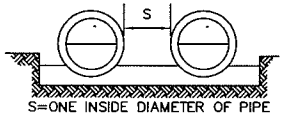

S=ONE INSIDE DIAMETER OF PIPE OR 3 FEET, WHICHEVER IS SMALLER.
FOR PIPE-ARCH CULVERTS SUBSTITUTE SPAN FOR INSIDE DIAMETER.

DETAIL SHOWING MINIMUM COVER FOR PIPE CULVERTS
N.T.S.

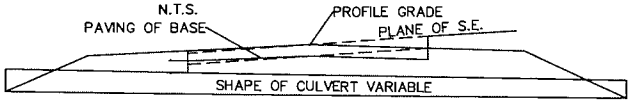

SPECIAL NOTE:
AASHTO M294 (HDPE) PIPE IS ALLOWABLE IF GDOT SECTION 550 GUIDELINES ARE FOLLOWED, APPROVED ON GDOT QPL 51:
PE PIPE IS ALLOWABLE FOR THE FOLLOWING CONDITIONS:
A. PE PIPE MAY BE USED AS AN ALTERNATE TO LONGITUDINAL PIPE UNDER ALLOWABLE FILL SHOWN, FOR NON-TRAFFIC BEARING AND LOCAL ROAD BEARING APPLICATIONS.
B. PIPE MAY BE USED AS AN ALTERNATE TO PERFORATED UNDERDRAIN PIPE.
C. PE PIPE IS ALLOWABLE IN ALL SIDE DRAIN AND SLOPE DRAIN APPLICATIONS.

SEE THE TABLES ON STANDARDS # 521 AND 522.

FULTON COUNTY STANDARD DETAIL 520 STANDARD PIPE CULVERTS		DATE	REVISIONS	DATE	REVISIONS	DGS/DRN/CHKD: CMS APPROVED: REW DATE: 12-2-05	FULTON COUNTY	FULTON COUNTY PUBLIC WORKS 141 PRYOR ST. ATLANTA, GA. 30303 404-730-7400 FAX: 404-224-0498	DRAWING NO. 520

TABLE SHOWING GAUGES OF CORRUGATED STEEL AND THICKNESS IN INCHES OF CORRUGATED ALUMINUM PIPE ARCH FOR VARIOUS HEIGHT OF FILL ABOVE THE TOP OF THE PIPE-ARCH

* DIA. IN INCHES	SPAN IN INCHES	RISE IN INCHES	HEIGHT OF FILL IN FEET					TYPE OF PIPE
			1-2	3-10	11-15	16-20	21-25	
15	18	11	16 0.06	16 0.06	16 0.06	16 0.06	16 0.06	Steel Alum
18	22	13	16 0.06	16 0.06	16 0.06	16 0.06	16 0.073	Steel Alum
21	25	16	16 0.06	16 0.06	16 0.06	16 0.06	16 NP	Steel Alum
24	29	18	14 0.073	14 0.075	14 0.075	14 0.105	14 NP	Steel Alum
30	36	22	14 0.073	14 0.075	14 0.075	14 0.105	NP NP	Steel Alum
34	43	27	12 0.105	12 0.105	12 0.105	12 0.135	NP NP	Steel Alum
42	50	31	12 0.105	12 0.105	12 0.105	10 NP	NP NP	Steel Alum
48	56	34	10 0.135	12 0.105	10 0.135	10 NP	NP NP	Steel Alum
54	65	40	10	12	10	8	NP	Steel
60	72	44	8	10	8	NP	NP	Steel

* DIAMETER OF PIPE OF EQUAL PERPHERY.
FOR SIZES LARGER THAN SHOWN ABOVE, USE STRUCTUAL PLATE PIPE-ARCH, GA. STD. 201IA (SEE TABLE NO.2 FOR CIRCULAR PIPE)

HEIGHT OF FILL IN FEET
OVER TOP OF PIPE
CLASS OF CONCRETE PIPE
AND TYPE OF BACKFILL

HEIGHT OF FILL (H) IN FEET **	CLASS OF PIPE	TYPE OF BACKFILL
1 to 15	III	NORMAL
15 to 20	IV	NORMAL
20 to 30	V	NORMAL
30 to 50	V	IMPERFECT
50 to 70	V	IMPERFECT

FULTON COUNTY STANDARD DETAIL 521
PIPE CULVERTS (TABLES)

DATE	REVISIONS	DATE	REVISIONS

DGS/DRN/CHKD: CMS
APPROVED: REW
DATE: 12-2-05

FULTON COUNTY

FULTON COUNTY PUBLIC WORKS
141 PRYOR ST. ATLANTA, GA. 30303
404-730-7400 FAX: 404-224-0498

DRAWING NO. 521

TABLE SHOWING CLASSES OF CONCRETE PIPE, GAUGES OF CORRUGATED STEEL PIPE AND THICKNESS IN INCHES OF CORRUGATED ALUMINUM PIPE FOR VARIOUS HEIGHTS OF FILL ABOVE TOP OF PIPE

DIAM. IN INCHES	TYPE OF PIPE	+ Height of Fill in Feet Above Top of Pipe**										
		1–10	10–15	15–20	20–25	25–30	30–35	35–40	40–50	50–60	60–70	70–80
15	Concrete	III	III	IV	V	V	V	V	V	V	V	V
	Cor. Steel	16	16	16	16	16	16	16	16	14	14	10
	Cor Alum.	0.06	0.06	0.06	0.06	0.06	0.075	0.105	NP	NP	NP	NP
18	Concrete	III	III	IV	V	V	V	V	V	V	V	V
	Cor. Steel	16	16	16	16	16	6	16	14	14	12	10
	Cor Alum.	0.06	0.06	0.06	0.06	0.075	0.105	NP	NP	NP	NP	NP
24	Concrete	III	III	IV	V	V	V	V	V	V	V	V
	Cor. Steel	16	16	16	16	16	12	12	10	8	0	0
	Cor Alum.	0.075	0.075	0.075	0.075	0.105	0.135	NP	NP	NP	NP	NP
30	Concrete	III	III	IV	V	V	V	V	V	V	V	V
	Cor. Steel	16	16	16	14	12	14	12	8	0	0	D
	Cor Alum.	0.075	0.075	0.075	0.105	0.135	0.164	NP	NP	NP	NP	NP
36	Concrete	III	III	IV	V	V	V	V	V	V	V	V
	Cor. Steel	16	16	16	10	14	12	10	10	8	10	0
	Cor Alum.	0.105	0.105	0.105	0.105	0.135	0.164	NP	NP	NP	NP	NP
42	Concrete	III	III	IV	V	V	V	V	V	V	V	NP
	Cor. Steel	16	16	14	16	14	14	12	8	0	0	0
	Cor Alum.	0.105	0.105	0.105	0.135	0.135	NP	NP	NP	NP	NP	NP
48	Concrete	III	III	IV	V	V	V	V	V	V	V	V
	Cor. Steel	16	16	12	16	14	14	12	12	0	0	0
	Cor Alum.	0.105	0.105	0.105	0.135	0.164	NP	NP	NP	NP	NP	NP
54	Concrete	III	III	IV	V	V	V	V	V	V	V	V
	Cor. Steel	14	14	14	14	14	8	8	0	0	0	0
	Cor Alum.	0.105	0.105	0.105	0.135	0.164	NP	NP	NP	NP	NP	NP
60	Concrete	III	III	IV	V	V	V	V	V	V	V	V
	Cor. Steel	12	12	12	12	12	10	8	NP	NP	NP	NP
	Cor Alum.	0.135	0.135	0.164	0.164	NP	NP	NP				
66	Concrete	III	III	IV	V	V	V	V	V	V	V	V
	Cor. Steel	12	12	12	12	10	10	NP	NP	NP	NP	NP
	Cor Alum.	0.135	0.135	0.164	NP	NP	NP					
72	Concrete	III	III	IV	V	V	V	V	V	V	V	V
	Cor. Steel	10	10	10	10	8	NP	NP	NP	NP	NP	NP
	Cor Alum.	0.135	0.135	0.164	NP	NP						
78	Concrete	III	III	IV	V	V	V	V	V	V	V	V
	Cor. Steel	8	8	8	8	USE	STRU	CTUR	AL	PLA	TE	PIPE
	Cor Alum.	NP	NP	NP	NP	NP	NP	NP	NP	NP	NP	NP
84	Concrete	III	III	IV	V	V	V	V	V	V	NP	NP
	Cor. Steel	8	8	8	USE	STRU	CTUR	AL	PLA	TE	PIPE	NP
	Cor Alum.	NP	NP	NP	NP	NP	NP	NP	NP	NP	NP	
90	Concrete	III	III	IV	V	V	NP	NP	NP	NP	NP	NP
	Cor. Steel	NP	NP	USE	STRU	CTUR	AL	PLA	TE	PIPE	NP	NP
	Cor Alum.			NP	NP	NP	NP	NP	NP	NP		
96	Concrete	III	III	IV	V	V	NP	NP	NP	NP	NP	NP
	Cor. Steel	NP	NP	USE	STRU	CTUR	AL	PLA	TE	PIPE	NP	NP
	Cor Alum.			NP	NP	NP	NP	NP	NP	NP		
102	Concrete	III	III	IV	V	V	NP	NP	NP	NP	NP	NP
	Cor. Steel	NP	NP	USE	STRU	CTUR	AL	PLA	TE	PIPE	NP	NP
	Cor Alum.			NP	NP	NP	NP	NP	NP	NP		
108	Concrete	III	III	IV	V	V	NP	NP	NP	NP	NP	NP
	Cor. Steel	NP	NP	USE	STRU	CTUR	AL	PLA	TE	PIPE	NP	NP
	Cor Alum.			NP	NP	NP	NP	NP	NP	NP		

NP=NOT PERMITTED
= PIPE SHALL BE SHAPE II CIRCULAR CROSS SECTION FACTORY ELONGATED

ALL STEEL AND ALUMINUM PIPE SHALL BE LOCK–SEAM OR WELDED–SEAM (HELICAL) CONSTRUCTION.

MINIMUM COVER VALUES APPLY TO HS–20 LIVE LOAD. MINIMUM COVER NEEDED FOR CONSTRUCTION VEHICLES MAY BE GREATER AND IS THE RESPONSIBILITY OF THE CONTRACTOR.

TABLE VALUES FOR ALUMINUM CORRUGATED PIPE (OR ALUMINUM SPIRAL RIB PIPE) ARE COMPUTED BASED UPON ALCLAD ALLOY 3004–H34 HAVING MINIMUM YIELD STRENGTH, fy=24,000 PSI. IF ALUMINUM PIPE IS OTHERWISE FURNISHED AS 3004–H32 (fy=20,000 PSI). THE TABLE NO.1 ALLOWABLE FILL HEIGHTS SHALL BE ADJUSTED AS FOLLOWS:

A. ALL MINIMUM COVER VALUES SHALL BE INCREASED BY 15 PERCENT. (EXAMPLE: 12 INCHES BECOMES 13.8 INCHES)
B. ALL HEIGHT OF FILL VALUES SHALL BE DECREASED BY 15 PERCENT. (EXAMPLE: 35–40 FEET BECOMES 29.7–34.0 FEET).

TABLE NO.3 – (INFORMATION ONLY)

	COR. METAL THICKNESS	EQUIVALENT GUAGE
STEEL	.064	16
	0.079	14
	0.109	12
	0.138	10
	0.168	8
ALUMINUM	0.060	16
	0.075	14
	0.105	12
	0.135	10
	0.164	8

FULTON COUNTY STANDARD DETAIL 522
PIPE CULVERTS (TABLES CONT.)

DATE	REVISIONS	DATE	REVISIONS

DGS/DRN/CHKD: CMS
APPROVED: REW
DATE: 12–2–05

FULTON COUNTY

FULTON COUNTY PUBLIC WORKS
141 PRYOR ST. ATLANTA, GA. 30303
404–730–7400 FAX: 404–224–0498

DRAWING NO. 522

PERFORATED UNDERDRAIN
N.T.S.

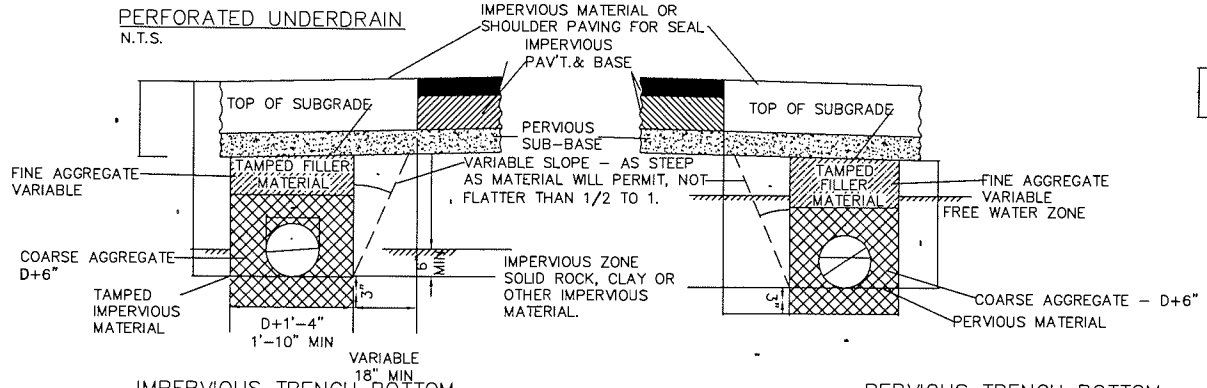

IMPERVIOUS TRENCH BOTTOM (INTERCEPTOR)

NOTE:
COARSE AGGREGATE FOR UNDERDRAIN TO BE COMPOSED OF NO. 7 STONE. FINE AGGREGATE FOR UNDERDRAIN TO BE COMPOSED OF NO.2 SAND.

NOTE:
PERFORATED UNDERDRAIN PIPE WILL BE INSTALLED COMPLETE PRIOR TO PLACING PERVIOUS SUB-BASE MATERIAL.

NOTE:
FABRIC MATERIAL REQUIRED WHEN USING PERFORATED UNDERDRAIN.

PERVIOUS TRENCH BOTTOM (TO LOWER WATER TABLE)

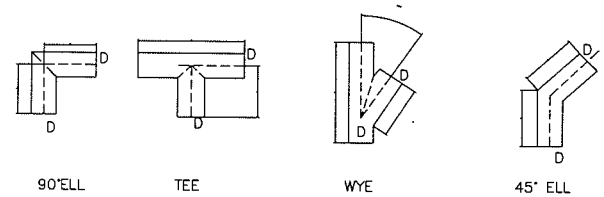

GENERAL NOTES:
UNDERDRAINS MAY BE PLACED IN SHOULDER AREAS OR AS TRANSVERSE DRAINAGE UNDER PAVEMENT. SEE TYPICAL SECTION AND PLAN AND PROFILE SHEETS FOR SPECIAL CONDITIONS. TRENCH SHALL BE SHAPED WITH SIDES AS NEARLY VERTICAL AS IS PRACTICAL AND WITH A FLAT BOTTOM. MINIMUM GRADIENTS FOR UNDERDRAIN PIPE SHALL BE 0.15%.
THE LOWER ROW OF PERFORATIONS IN THE PIPE SHALL BE PLACED ABOVE THE BOTTOM OF THE TRENCH AS SHOWN. DEAD ENDS OF PIPE SHALL BE CLOSED CAPS OR CONCRETE PLUGS. OUTFALL ENDS OF PIPE SHALL BE EQUIPPED WITH SCREEN. LATERAL CONNECTIONS SHALL BE MADE WITH SUITABLE STANDARD FITTINGS (ELLS, WYES OR TEES AS DETAILED). THE DIMENSIONS (A THRU C) SHOWN ABOVE ON THE LATERAL CONNECTIONS FOR THE VARIOUS KINDS AND SIZES OF PERFORATED UNDERDRAIN SHALL BE IN AGREEMENT WITH THE MANUFACTURES STANDARD PRACTICE. MARKERS: EACH OUTLET END, OF THE DRAINAGE SYSTEM SHALL BE MARKED WITH A 5'X4"X4" PRESERVATIVE TREATED WOOD POST PLACED 3' IN THE GROUND IN A VERTICAL POSITION AT THE EXTREME OUTLET END AND ADJACENT TO THE SIDE OF THE PIPE.

OUTLET DETAIL FOR PLASTIC UNDERDRAIN
(REQUIRED AT ALL OUTLETS WHERE PERFORATED PLASTIC UNDERDRAIN IS TERMINATED ON SLOPES).

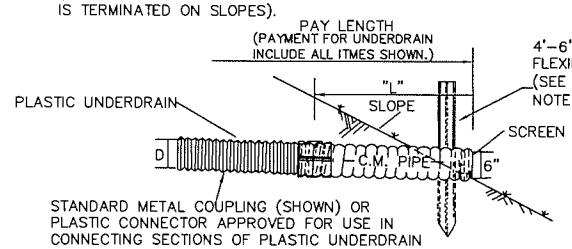

STANDARD METAL COUPLING (SHOWN) OR PLASTIC CONNECTOR APPROVED FOR USE IN CONNECTING SECTIONS OF PLASTIC UNDERDRAIN OR OTHER TYPE CONNECTION APPROVED BY THE ENGINEER.

C.M. OUTLET STUB –MINIMUM LENGTH	
SLOPE	"L"
2:1 OR STEEPER	2'–10"MIN.
2+:1 TO 4:1	5'–0"MIN.
4+:1 TO 6:1	10'–0"MIN.
FLATTER THAN 6:1	14'–0"MIN.

NOTE: "L" = MINIMUM LENGTH OF CORRUGATED METAL PIPE SECTION. THE C.M. OUTLET STUB SECTION MAY BE PERFORATED OR MAY BE NON–PERFORATED.

NOTE: ALTERNATE FLEXIBLE DELINEATORS PERMITTED IF APPROVED BY THE D.O.T. LABORATORY.

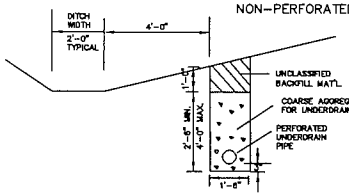

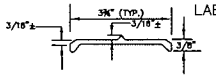

DELINEATOR POST SECTION (TYP.)
COLOR: WHITE
LENGTH: 4'–6" (FROM TOP TO BOTTOM POINT)
SPECIFICATION: SEC. 911 (EXCEPT REFLECTIVE SHEETING IS NOT REQUIRED.)

SCREEN FOR UNDERDRAIN
N.T.S.

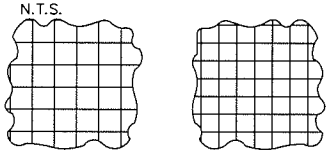

2x2 MESH 3x3 MESH
SCREEN TO BE GALVANIZED HARDWARE(WIRE) CLOTH 2x2 OR 3x3 MESH, MIN. 21 GAUGE.

SCREEN TO BE PLACED OVER THE END OF PIPE AS SHOWN AND SECURED FIRMLY IN PLACE BY WRAPPING GALVANIZED WIRE AROUND PIPE AND SCREEN. OTHER METHODS FOR SECURING SCREEN FIRMLY OVER END OF PIPE MAY BE USED IF APPROVED BY THE ENGINEER.

SEMICIRCULAR UNDERDRAIN PIPE

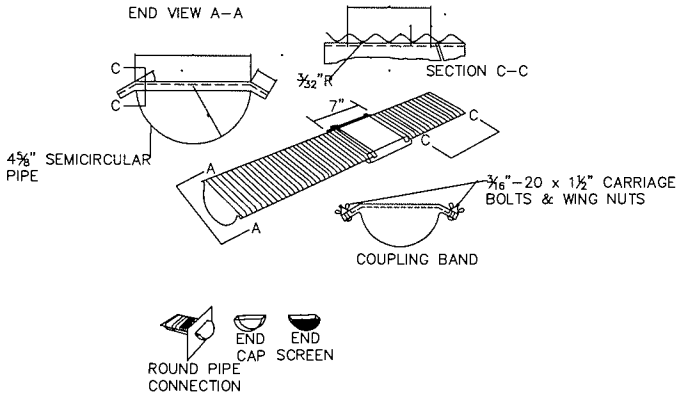

FULTON COUNTY STANDARD DETAIL 523 PERFORATED UNDERDRAIN	DATE	REVISIONS	DATE	REVISIONS	DGS/DRN/CHKD: CMS APPROVED: REW DATE: 12–2–05	FULTON COUNTY	FULTON COUNTY PUBLIC WORKS 141 PRYOR ST. ATLANTA, GA. 30303 404–730–7400 FAX: 404–224–0498	DRAWING NO. 523

HEIGHT OF FILL IN FEET ABOVE TOP OF PIPE**	PIPE DIAMETER (IN INCHES)																																			
	15		18		24		30		36		42		48		54		60		66		72		78		84		90		96		102		108	
	C	S	C	S	C	S	C	S	C	S	C	S	C	S	C	S	C	S	C	S	C	S	C	S	C	S	C	S	C	S	C	S	C	S	C	S
1–10	III	16	III	16	III	16	III	16	III	16	III	16	III	16	III	14	III	12	III	12	III	10	III	8	III	8	III	USE STRUCTURAL PLATE PIPE	III	USE STRUCTURAL PLATE PIPE	III	USE STRUCTURAL PLATE PIPE	III	USE STRUCTURAL PLATE PIPE
10–15	III	16	III	16	III	16	III	16	III	16	III	16	III	16	III	14	III	12	III	12	III	10*	III	8	III	8	III		III		III		III	
15–20	IV	16	IV	16	IV	16	IV	16	IV	16	IV	14	IV	12	IV	10*	IV	8*	IV	12*	IV	10*	IV	8*	IV	8*	IV		IV		IV		IV	
20–25	V	16	V	16	V	16	V	14	V	10	V	16*	V	16*	V	14*	V	12*	V	12*	V	10*	V	8*	V	STRUCT. PLATE	V		V		V		V	
25–30	V	16	V	16	V	16	V	10	V	14*	V	14*	V	14*	V	14*	V	12*	V	10*	V	8*	V	STRUCT. PLATE	V		V		V		V		V	
30–35	V	16	V	16	V	12	V	8*	V	12*	V	14*	V	14*	V	12*	V	10*	V	10*	V	STRUCT. PLT.	V		V		NP		NP		NP		NP	
35–40	V	16	V	16	V	12	V	12*	V	10*	V	12*	V	12*	V	8*	V	8*	V	STRUCT. PLT.	V		V		V		NP		NP		NP		NP	
40–50	V	16	V	14	V	10	V	8*	V	10	V	8*	V	0*	V	0	V	STR. PLT.	V		V		V		V		NP		NP		NP		NP	
50–60	V	16	V	12	V	ø	V	ø	V	8	V	0	V	0	V	0	V		V		V		V		V		NP		NP		NP		NP	
60–70	V	14	V	12	V	ø	V	ø	V	10*	V	0	V	D	V	0	V		V		V		V		NP		NP		NP		NP		NP	
70–80	V	12	V	10	V	ø	V	ø	V	0	V	0	V	0	V	0	V		V		NP		V		NP		NP		NP		NP		NP	

* PIPE SHALL BE SHAPE II CIRCULAR CROSS SECTION FACTORY ELONGATED
** WHERE H=10', 15', 20' ETC. USE GAUGE THICKNESS IN INCHES OR CLASS OF PIPE SPECIFIED FOR NEXT HIGHEST INCREMENTS OF HEIGHT OF FILL
NP NOT PERMITTED
C REINFORCED CONCRETE PIPE
S CORRUGATED METAL PIPE
ø USE 60" STRUCTUAL PLATE PIPE

	THICKNESS				
GAGE	0.064"	0.079"	0.109"	0.138"	0.168"
	16	14	12	10	8

TABLE THICKNESS TO GAGE RATIO

NOTE:
ALL C.M.P. PIPE SHALL BE ½ COATED WITH A PAVED INVERT, EXCEPT AS FOLLOWS:
FULLY COATED PIPE WITH A PAVED INVERT MAY BE USED UNDER THE FOLLOWING CONDITIONS:
(1) A SMALL PIECE OF ONE OF THE PIPES IN EACH SIZE CATEGORY WILL BE CHOSEN AT RANDOM BY A FULTON COUNTY INSPECTOR.
(2) THIS PIPE IS TO BE TESTED FOR GAUGE AND COMPOSITION BY AN INDEPENDENT TESTING LABORATORY.
(3) IF, AFTER TESTING, THE TEST REPORT INDICATES THAT THE PIPE DOES NOT MEET COUNTY SPECIFICATIONS, THE CONTRACTOR MUST IMMEDIATELY REMOVE ALL PIPE ON THE JOB AND TEST EACH PIECE.
(4) COST OF ALL TESTS ARE TO BE BORN BY THE DEVELOPER.
(5) CONC. PIPE REQUIRED UNDER ALL ROADWAYS & ON CROSS DRAINS.

FULTON COUNTY STANDARD DETAIL 524
PIPE GAUGE AND CLASS
(CONCRETE & CORRUGATED STEEL PIPE)

DATE	REVISIONS	DATE	REVISIONS

DGS/DRN/CHKD: CMS
APPROVED: REW
DATE: 12-2-05

FULTON COUNTY

FULTON COUNTY PUBLIC WORKS
141 PRYOR ST. ATLANTA, GA. 30303
404-730-7400 FAX: 404-224-0498

DRAWING NO. 524

NOTES:
IT IS PREFERABLE TO HAVE A FREEBOARD OF 2 FEET MINIMUM. FOR SMALL DETENTION FACILITIES, AN ABSOLUTE MINIMUM FREEBOARD OF 1 FOOT SHALL BE PROVIDED. REFERENCE PAGE 172 OF MANUAL ON DRAINAGE DESIGN FOR FULTON COUNTY, JANUARY 1983.
A SMALL DETENTION FACILITY US 3 FEET OR LESS TO THE 25 YEAR ELEVATION.

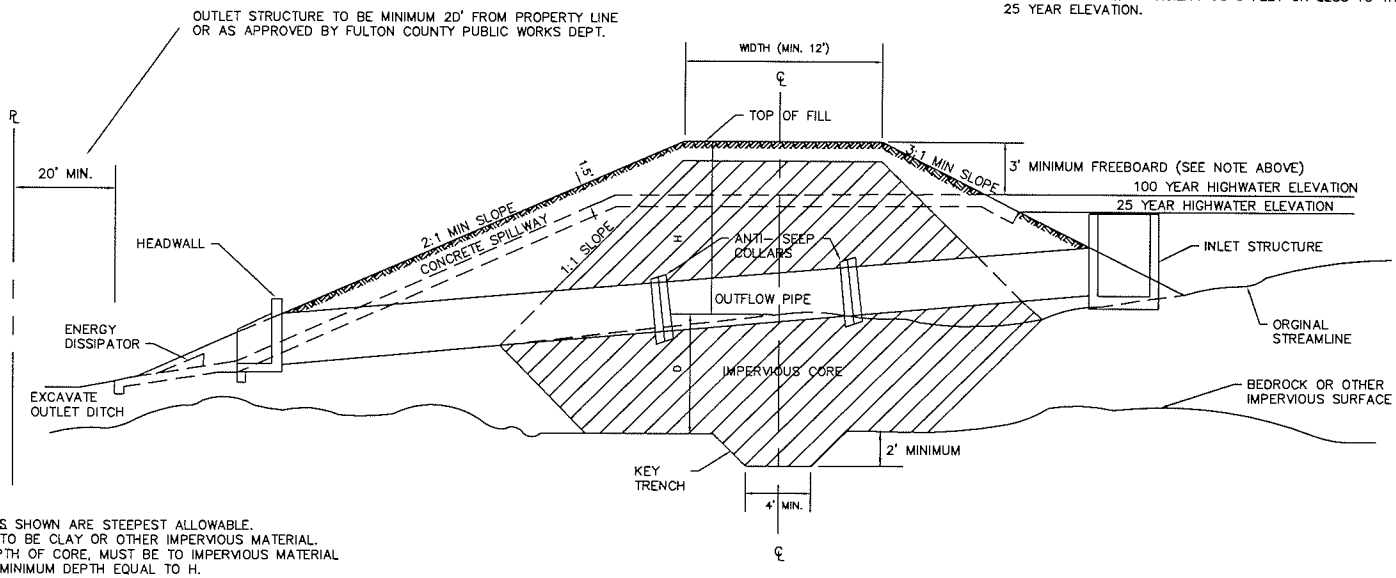

NOTES SHOWN ARE STEEPEST ALLOWABLE.
CORE TO BE CLAY OR OTHER IMPERVIOUS MATERIAL.
D, DEPTH OF CORE, MUST BE TO IMPERVIOUS MATERIAL OR A MINIMUM DEPTH EQUAL TO H.
CORE TO BE PLACED IN 6" LAYERS & COMPACTED TO 95% STANDARD PROCTOR.
WIDTH = (H/5) + 12.

EMERGENCY SPILLWAYS ARE TO BE CUT IN NATURAL GROUND WHERE APPLICABLE.

ANTI SEEP COLLARS REQ'D.

ALTERNATE DESIGNS MAY BE APPROVED OR WILL BE CONSIDERED BY FULTON COUNTY PUBLIC WORKS.

PROVIDE CONCRETE OR ALUMINUM FOR OUTFLOW PIPE AND OUTLET STRUCTURE MATERIAL

FULTON COUNTY STANDARD DETAIL 525 EARTHFILL DAM FOR DETENTION PONDS		DATE	REVISIONS	DATE	REVISIONS	DGS/DRN/CHKD: CMS APPROVED: REW DATE: 12-2-05	FULTON COUNTY	FULTON COUNTY PUBLIC WORKS 141 PRYOR ST. ATLANTA, GA. 30303 404-730-7400 FAX: 404-224-0498	DRAWING NO. 525

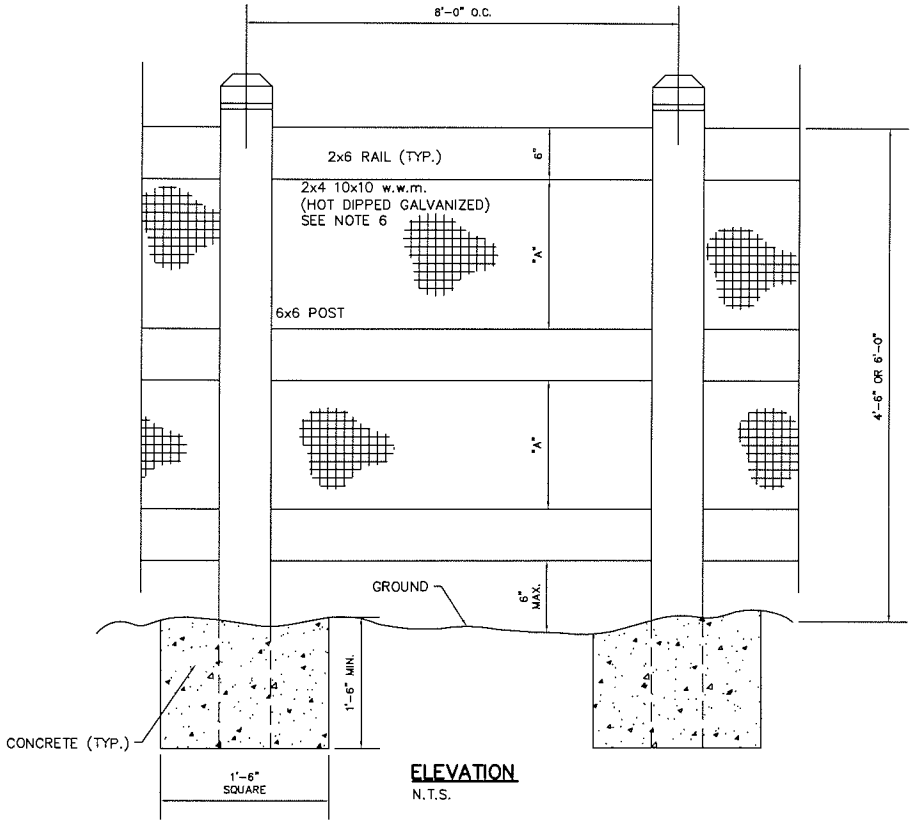

ELEVATION
N.T.S.

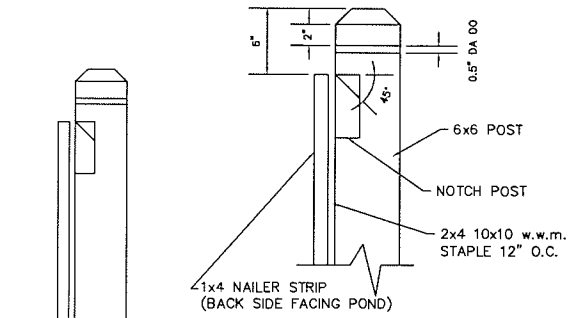

DETAIL
N.T.S.

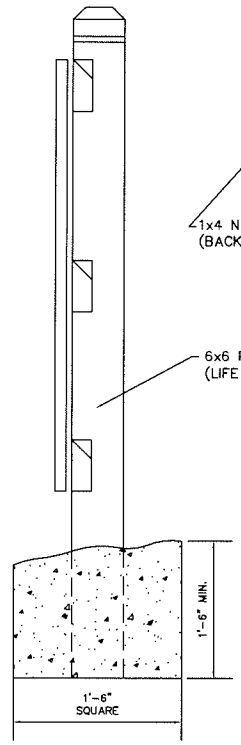

SECTION
N.T.S.

NOTES:
1. ALL FASTENERS TO BE HOT-DIPPED GALVANIZED.
2. 2x4 10x10 w.w.m. TO BE HOT-DIPPED GALVANIZED.
3. CONCRETE SHALL BE 2500 P.S.I.
4. A 4'-6" JIGH FENCE CAN BE ERECTED WHEN THE POND IS 3'-0" OR LESS TO THE 25 YEAR STORM ELEVATION.
5. A FENCE IS ALWAYS REQUIRED.
6. OTHER WIRE GAUGES CAN BE ACCEPTED AS REQUIRED BY ENGINEER.
7. FENCE TO BE PLACED OUTSIDE OF ACCESS.
8. ACCESS ROAD TO BE 10' INSIDE OF FENCE.

FULTON COUNTY STANDARD DETAIL 526 FENCE DETAIL FOR DETENTION PONDS (ATL. TO CHAIN LINK)		DATE	REVISIONS	DATE	REVISIONS	DGS/DRN/CHKD: CMS APPROVED: REW DATE: 12-2-05	FULTON COUNTY	FULTON COUNTY PUBLIC WORKS 141 PRYOR ST. ATLANTA, GA. 30303 404-730-7400 FAX: 404-224-0498	DRAWING NO. 526

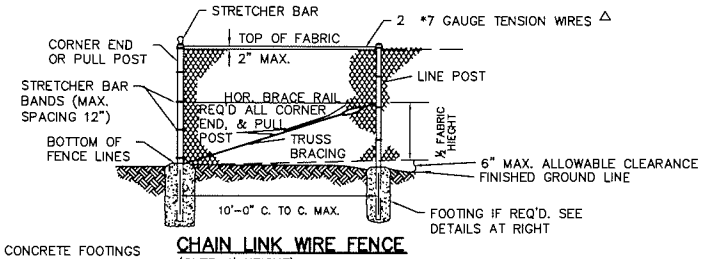

CONCRETE FOOTINGS ARE REQUIRED AT ALL CORNERS, END AND PULL POST

CHAIN LINK WIRE FENCE

(OVER 4' HEIGHT)
N.T.S.

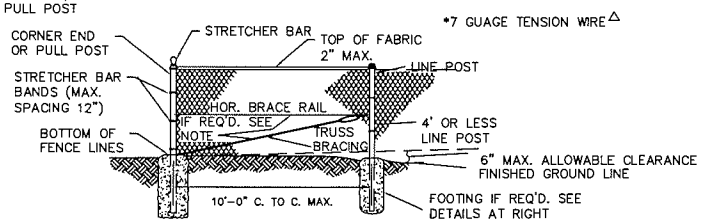

CHAIN LINK WIRE FENCE

(4' OR LESS HEIGHT)
N.T.S.

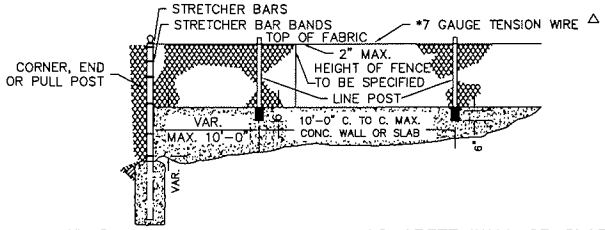

METHOD OF INSTALLATION OVER CONCRETE WALL OR SLAB AND ALSO WHERE HEIGHT OF FENCE CHANGES.

N.T.S.

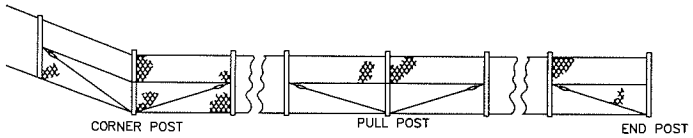

METHOD OF BRACING END, CORNER AND PULL POST

N.T.S.

NOTES:

FABRIC SHALL BE FASTENED TO LINE POST AT INTERVALS NOT GREATER THAN 14".

TENSION WIRES SHALL BE TIED TO FABRIC WITH 9 GA. WIRE OR 11 GA. △HOG RINGS AT 24" C. TO C. MAX SPACINGS.

WHERE A PROPERTY OWNERS CHAIN LINK WIRE FENCE HAS TO BE REPLACED BY THE DEPARTMENT AS PART OF THE CONSTRUCTION PROJECT, AND THE EXISTING FENCE HAD A TOP RAIL, THEN THE NEW REPLACEMENT FENCE SHALL ALSO HAVE A SIMILAR TYPE RAIL INSTEAD OF TENSION WIRES AT THE TOP OF THE FENCE.

HORIZONTOAL BRACE RAILS AND TRUSS BRACING SHALL BE REQUIRED AT ALL CORNER, END AND PULL POSTS, EXCEPT WHERE A CONTINUOUS TOP RAIL IS SPECIFIED (SEE NOTE ABOVE) WITH A FENCE 4 FT. OR LESS IN HEIGHT.

*ALTERNATE:

TYPE "C" LINE POSTS OR 2⅜"ø TUBE LINE POSTS OR OTHER TYPE LINE POSTS APPROVED BY THE D.O.T. LABORATORY MAY BE DRIVEN TO A MINIMUM DEPTH OF THREE (3) FEET INSTEAD OF CONCRETE FOOTING SHOWN PROVIDING SOIL IS EITHER CLASS I, II, III, OR V SOIL. CONCRETE FOOTING REQUIRED FOR LINE POSTS INSTALLED IN MARSHY OR SWAMPY AREAS (CLASS IV SOILS).

ALL CORNER, END AND PULL POSTS SHALL HAVE CONCRETE FOOTINGS AS SHOWN.

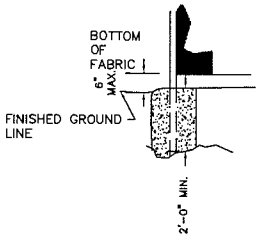

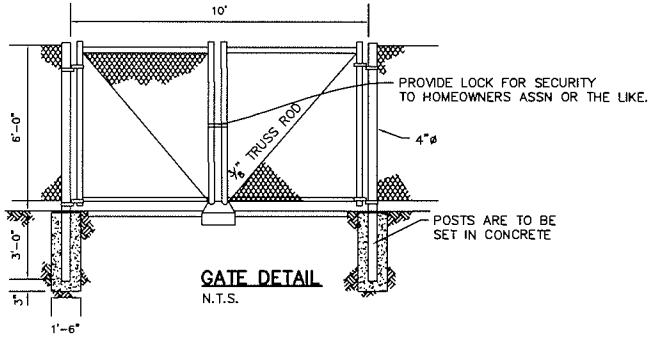

GATE DETAIL

N.T.S.

		DATE	REVISIONS	DATE	REVISIONS				DRAWING NO.
FULTON COUNTY STANDARD DETAIL 527 FENCE DETAIL FOR DETENTION PONDS						DGS/DRN/CHKD: CMS APPROVED: REW DATE: 12-2-05	FULTON COUNTY	FULTON COUNTY PUBLIC WORKS 141 PRYOR ST. ATLANTA, GA. 30303 404-730-7400 FAX: 404-224-0498	527

INDEX

DWG NO.	DESCRIPTION
600	INDEX AND GENERAL NOTES
601	5/8" METER INSTALLATION
602	1" METER INSTALLATION
603	1 1/2" METER INSTALLATION
604	2" METER INSTALLATION
605	LARGE METERS AND VAULT
606	BRASS FITTINGS FOR METER INSTALLATION ON NPRL
607	METER LOCATIONS: 3/4" – 2"
608	VALVE COVER MARKINGS/VAVLE BOX
609	LINE/VALVE MARKER LABEL
610	CUSTOMER SIGNS
611	POLYETHYLENE ENCASEMENT INSTALLATION
612	CUL-DE-SAC FLUSH POINT DETAIL
613	IN LINE FLUSH POINT DETAIL
614	NPRL TERMINATION CUL-DE-SAC
615	ROUND CONNECTION DETAIL

GENERAL NOTES

FULTON COUNTY STANDARD DETAIL
INDEX AND GENERAL NOTES

DATE	REVISIONS	DATE	REVISIONS

DGS/DRN/CHKD: CMS
APPROVED: REW
DATE: 12-02-05

FULTON COUNTY

FULTON COUNTY PUBLIC WORKS
141 PRYOR ST. ATLANTA, GA. 30303
404-730-7400 FAX: 404-730-6325

DRAWING NO.
INDEX
600

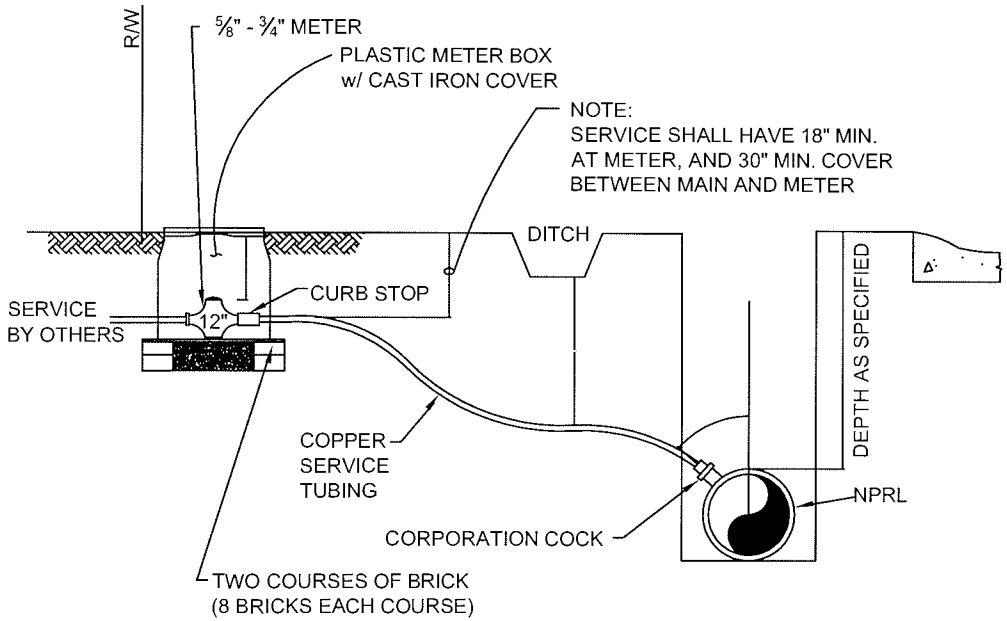

NOTES:

1. SERVICE LINE SHALL BE 3/4" DIAMETER FROM MAIN TO METER
2. USE ALL FLARE JOINTS
3. INSTALLATION SHALL ALLOW ADEQUATE ROOM TO REMOVE AND/OR REPAIR METER.
4. METER BOX SHALL BE APPROXIMATELY 12" x 18".

FULTON COUNTY STANDARD DETAIL 601 5/8" METER INSTALLATION		DATE	REVISIONS	DATE	REVISIONS	DGS/DRN/CHKD: CMS APPROVED: ML DATE: 12-2-05	FULTON COUNTY	FULTON COUNTY PUBLIC WORKS 141 PRYOR ST. ATLANTA, GA. 30303 404-730-7400 FAX: 404-224-0498	DRAWING NO. 601

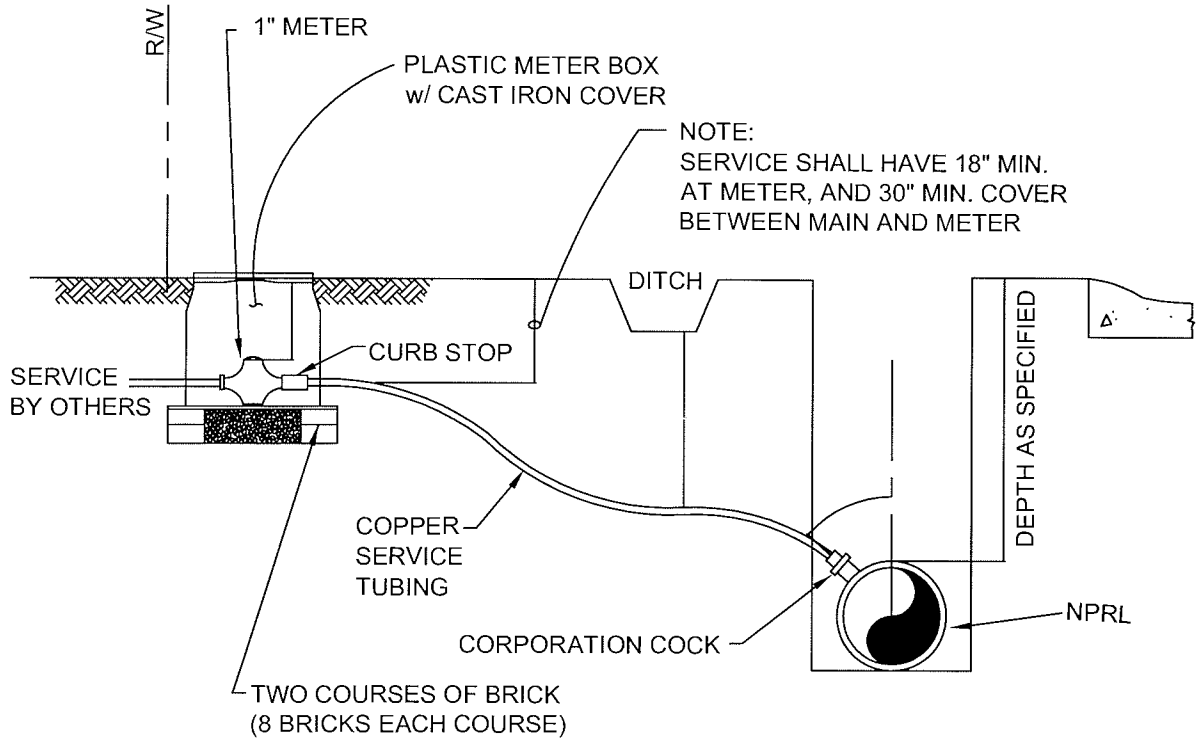

NOTES:

1.SERVICE LINE SHALL BE 1" FROM MAIN TO METER.

2. USE ALL FLARE JOINTS.

3. INSTALLATION SHALL ALLOW ADEQUATE ROOM TO REMOVE AND/OR REPAIR METER.

4. METER BOX SHALL BE APPROXIMATELY 18" x 24".

FULTON COUNTY STANDARD DETAIL 602 1" METER INSTALLATION		DATE	REVISIONS	DATE	REVISIONS	DGS/DRN/CHKD: CMS APPROVED: ML DATE: 12-2-05	FULTON COUNTY	FULTON COUNTY PUBLIC WORKS 141 PRYOR ST. ATLANTA, GA. 30303 404-730-7400 FAX: 404-224-0498	DRAWING NO. 602

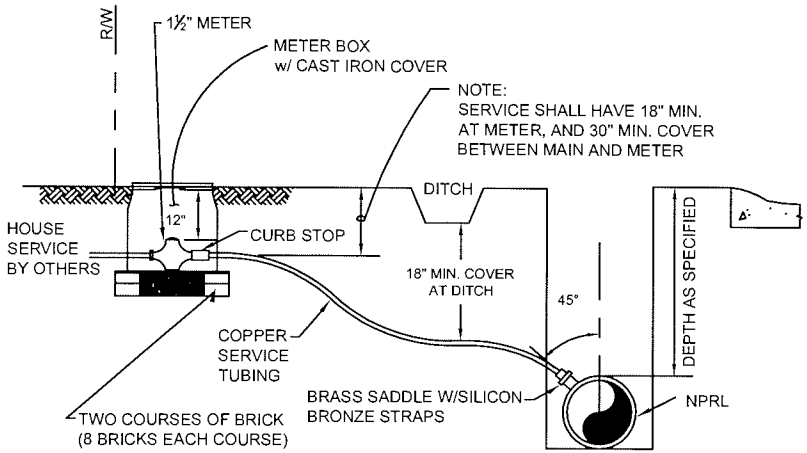

NOTES:

1.SERVICE LINE SHALL BE 1 1/2" FROM THE MAIN TO THE METER.

2. USE ALL COMPRESSION GRIP JOINT.

3. INSTALLATION SHALL ALLOW ADEQUATE ROOM TO REMOVE AND/OR REPAIR METER.

4. METER BOX SHALL BE APPROXIMATELY 24" x 36".

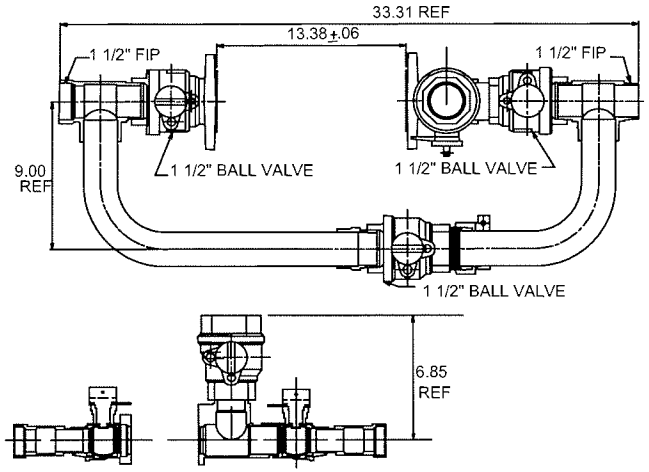

FULTON COUNTY STANDARD DETAIL 603 1 ½" METER INSTALLATION		DATE	REVISIONS	DATE	REVISIONS	DGS/DRN/CHKD: CMS APPROVED: ML DATE: 12-2-05	FULTON COUNTY	FULTON COUNTY PUBLIC WORKS 141 PRYOR ST. ATLANTA, GA. 30303 404-730-7400 FAX: 404-224-0498	DRAWING NO. 603

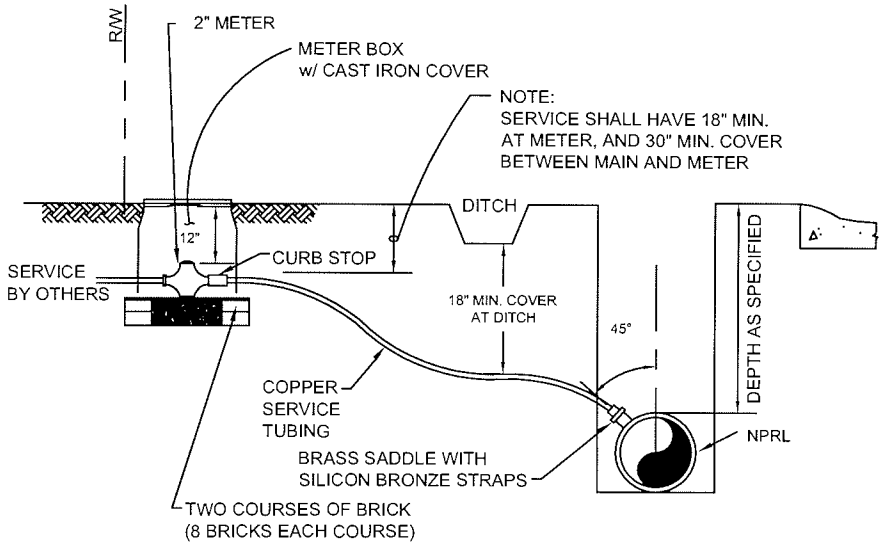

NOTES:

1. SERVICE LINE SHALL BE 2" DIAMETER FROM THE MAIN TO THE METER
2. USE ALL COMPRESSION GRIP JOINTS.
3. INSTALLATION SHALL ALLOW ADEQUATE ROOM TO REMOVE AND/OR REPAIR METER.
4. METER BOX SHALL BE APPROXIMATELY 24" x 36".

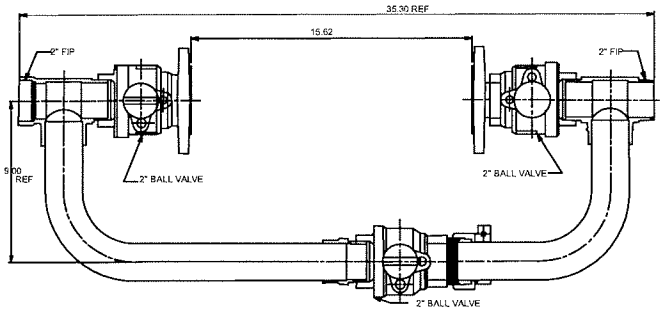

		DATE	REVISIONS	DATE	REVISIONS				
FULTON COUNTY STANDARD DETAIL 604 2" METER INSTALLATION						DGS/DRN/CHKD: CMS APPROVED: ML DATE: 12-2-05	FULTON COUNTY	FULTON COUNTY PUBLIC WORKS 141 PRYOR ST. ATLANTA, GA. 30303 404-730-7400 FAX: 404-224-0498	DRAWING NO. 604

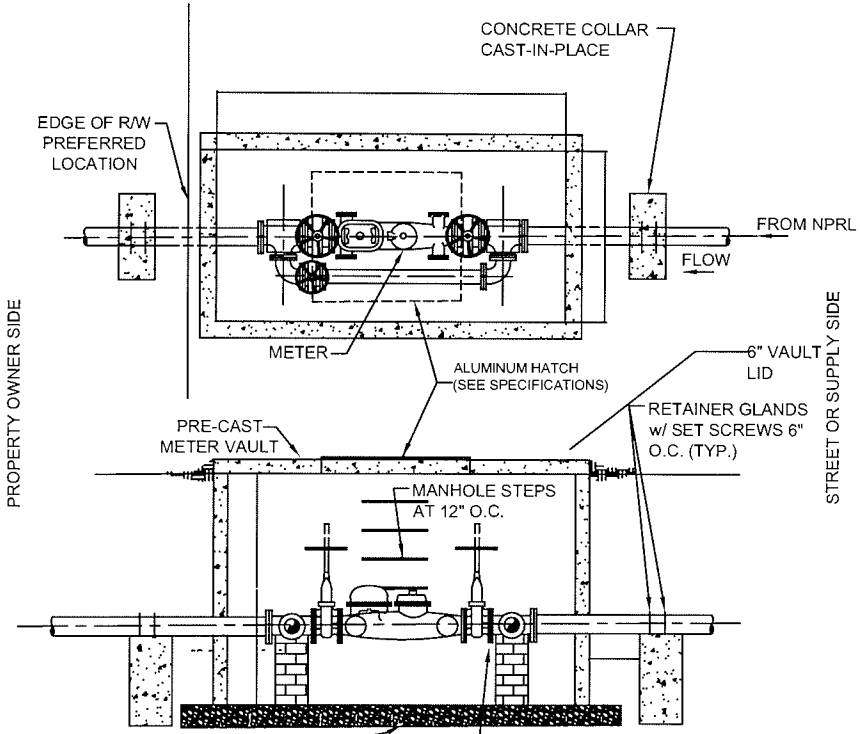

NOTES:

1. BOXES EXCEEDING 5' IN DEPTH MUST BE APPROVED BY FULTON COUNTY.
2. WHEN METER BOX CANNOT BE LOCATED ENTIRELY ON R/W, A PERMENANT EASEMENT SHALL BE OBTAINED TO PREVENT FENCES OR OTHER OBSTRUCTIONS FROM BEING ERECTED AROUND THE METER BOX.
3. COVER OPENING & STEPS TO BE PLACED NEAREST THE METER REGISTER.
4. THE METER MUST BE INSTALLED WITH AT LEAST 8 DIAMETERS OF STRAIGHT PIPE SAME SIZE AS METER ON THE INLET SIDE TO PERMIT ON-SITE MAINTENANCE AND CALIBRATION. A STRAINER MAY BE PROVIDED IN LIEU OF THE STRAIGHT PIPE IN ACCORDANCE WITH THE METER MANUFACTURER'S RECOMMENDATIONS. AN INLET AND OUTLET GATE VALVE WITH BYPASS LINE ARE REQUIRED (SEE ILLUSTRATION).
5. THESE BOXES ARE NOT TO BE INSTALLED IN TRAFFIC AREAS WITHOUT PRIOR PERMISSION FROM FULTON COUNTY.
6. ALL VALVES AND FITTINGS INSIDE THE VAULT SHALL BE FLANGED.
7. ALL FITTINGS OUTSIDE THE VAULT SHALL BE PUSH-ON JOINT WITH AMERICAN 'FAST-GRIP' GASKETS OR APPROVED EQUAL.
8. ALL METERS SHALL COME EQUIPPED WITH A TOUCHREAD OR TOUCHLESS SENSOR COMPATIBLE WITH FULTON COUNTY'S METER READING EQUIPMENT.
9. THIS DETAIL ALSO AUTHORIZED FOR INSTALLATION OF 3" AND LARGER RE-USE METERS.
10. HATCH SHALL BE 4' X 6', DOUBLE LEAF, FLUSH MOUNT, 1/4" DIAMOND PLATE, ALUMINUM DOORS LOCKABLE WITH A 5/8" ROD. HATCH SHALL BE BILCO # PDCM-3 OR PRE-APPROVED EQUAL FOR 6" & 8" METERS.. HATCH SHALL BE 3'6" X 3'6" SINGLE LEAF FLUSH MOUNT 1/4" DIAMOND PLATE, ALUMINUM DOOR LOCKABLE WITH 5/8" ROD. HATCH SHALL BE B.LCO#PCM - 5 OR PRE-APPROVED EQUAL FOR 3" & 4" METERS.

METER SIZE	VAULT			HATCH SIZE
	L	W	D	
3"	9'	5'	6'	3'6" X 3'6"
4"	9'	5'	6'	3'6" X 3'6"
6"	12'	6'	6'	4' X 6'
8"	12'	6'	6'	4' X 6'

FULTON COUNTY STANDARD DETAIL 605
LARGE METERS AND VAULT

DATE	REVISIONS	DATE	REVISIONS

DGS/DRN/CHKD: CMS
APPROVED: ML
DATE: 12-2-05

FULTON COUNTY

FULTON COUNTY PUBLIC WORKS
141 PRYOR ST. ATLANTA, GA. 30303
404-730-7400 FAX: 404-224-0498

DRAWING NO.
605

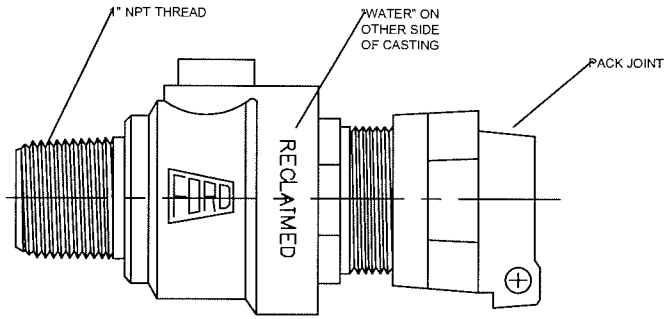

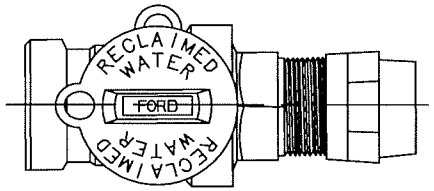

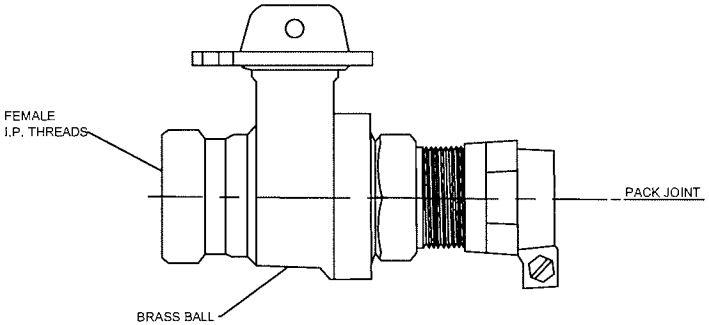

ALL BRASS
AWWA C800
ASTM B62

		DATE	REVISIONS	DATE	REVISIONS				DRAWING NO.
FULTON COUNTY STANDARD DETAIL 606 BRASS FITTINGS FOR METER INSTALLATION ON NPRL						DGS/DRN/CHKD: CMS APPROVED: ML DATE: 12-2-05	FULTON COUNTY	FULTON COUNTY PUBLIC WORKS 141 PRYOR ST. ATLANTA, GA. 30303 404-730-7400 FAX: 404-224-0498	606

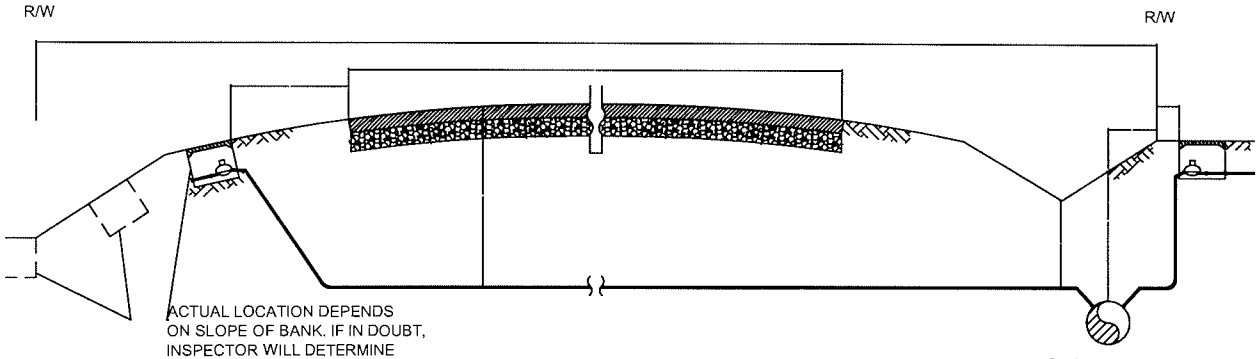

NOTE:
ABOVE IS APPROVED STANDARD METER LOCATION WHERE THE METER MAY BE LOCATED OUTSIDE OF THE R/W WITHOUT PRIOR ENGINEERING APPROVAL.

I

CROWNED ROAD
DITCH & EMBANKMENT

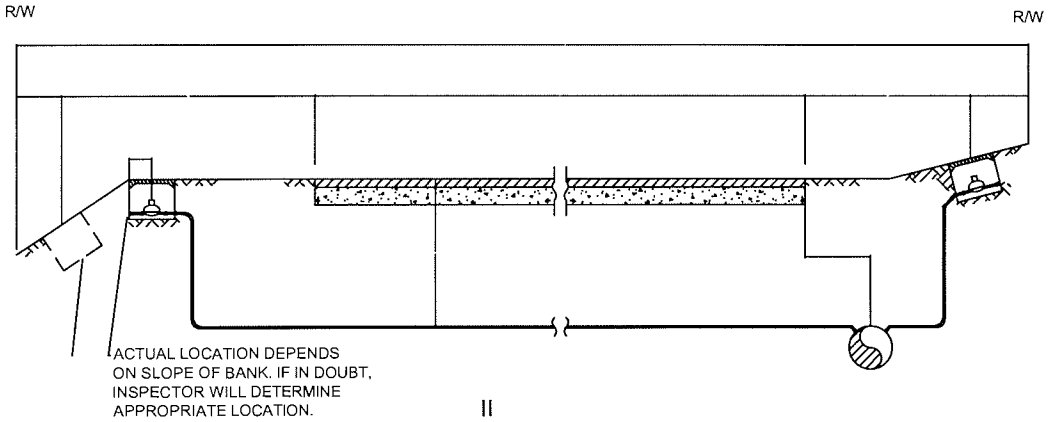

II

FLAT OR CONCRETE ROAD
SLIGHT DITCH & EMBANKMENT

FULTON COUNTY STANDARD DETAIL 607 METER LOCATIONS: ¾"–2"		DATE	REVISIONS	DATE	REVISIONS	DGS/DRN/CHKD: CMS APPROVED: ML DATE: 12–2–05	FULTON COUNTY	FULTON COUNTY PUBLIC WORKS 141 PRYOR ST. ATLANTA, GA. 30303 404–730–7400 FAX: 404–224–0498	DRAWING NO. 607

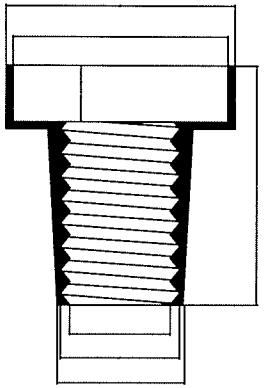

TOP SECTION

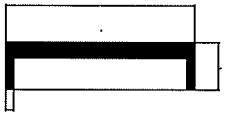

COVER

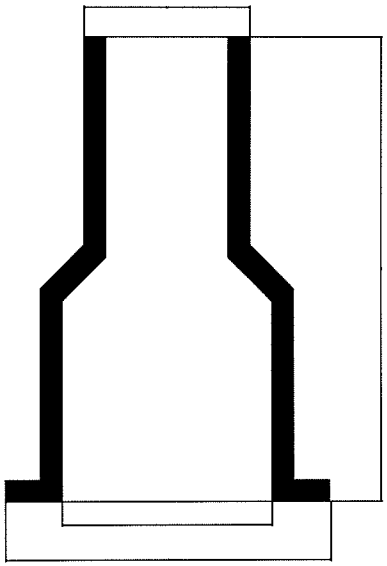

BOTTOM SECTION

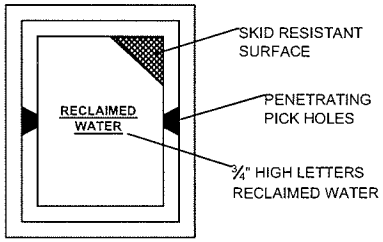

FULTON COUNTY STANDARD DETAIL 608 VALVE COVER MARKINGS/VALVE BOX		DATE	REVISIONS	DATE	REVISIONS	DGS/DRN/CHKD: CMS APPROVED: ML DATE: 12-2-05	FULTON COUNTY	FULTON COUNTY PUBLIC WORKS 141 PRYOR ST. ATLANTA, GA. 30303 404-730-7400 FAX: 404-224-0498	DRAWING NO. 608

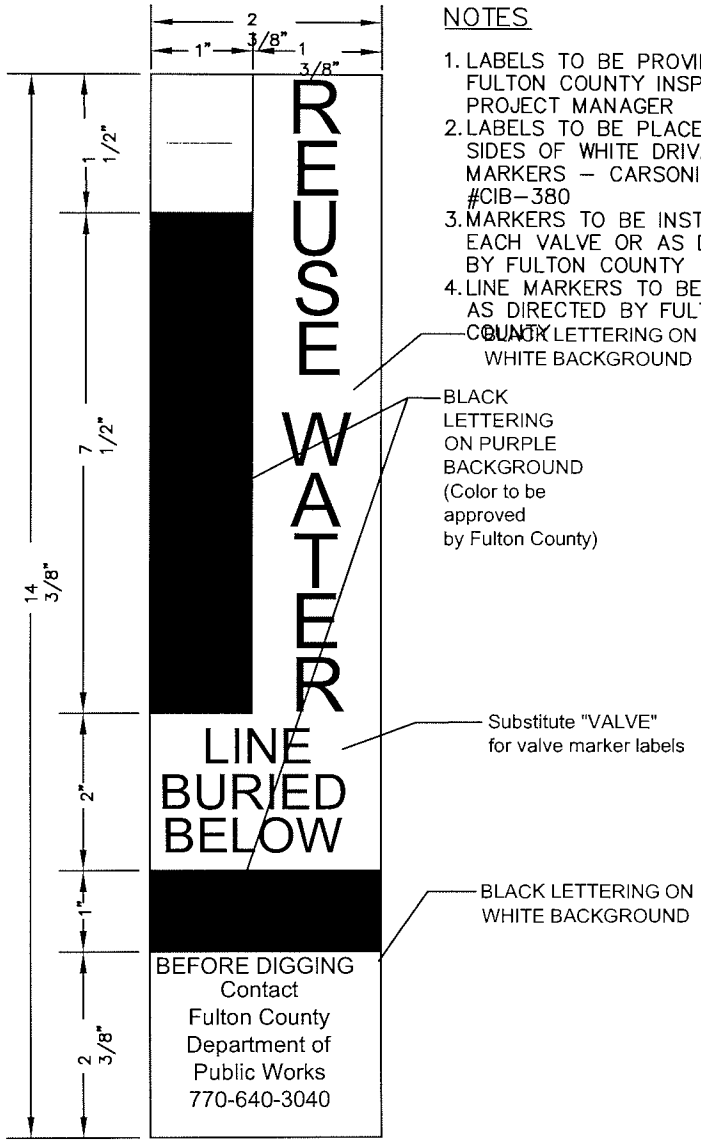

NOTES

1. LABELS TO BE PROVIDED BY FULTON COUNTY INSPECTOR AND PROJECT MANAGER
2. LABELS TO BE PLACED ON BOTH SIDES OF WHITE DRIVABLE MARKERS – CARSONITE #CIB–380
3. MARKERS TO BE INSTALLED WITH EACH VALVE OR AS DIRECTED BY FULTON COUNTY
4. LINE MARKERS TO BE INSTALLED AS DIRECTED BY FULTON COUNTY

FULTON COUNTY STANDARD DETAIL 609
LINE/VALVE MARKER LABEL

DATE	REVISIONS	DATE	REVISIONS

DGS/DRN/CHKD: CMS
APPROVED: ML
DATE: 12–2–05

FULTON COUNTY

FULTON COUNTY PUBLIC WORKS
141 PRYOR ST. ATLANTA, GA. 30303
404–730–7400 FAX: 404–224–0498

DRAWING NO. 609

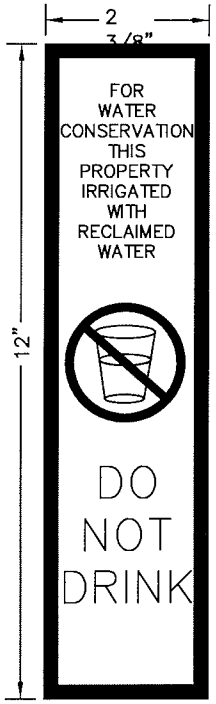

LABEL SIGNS
N.T.S.

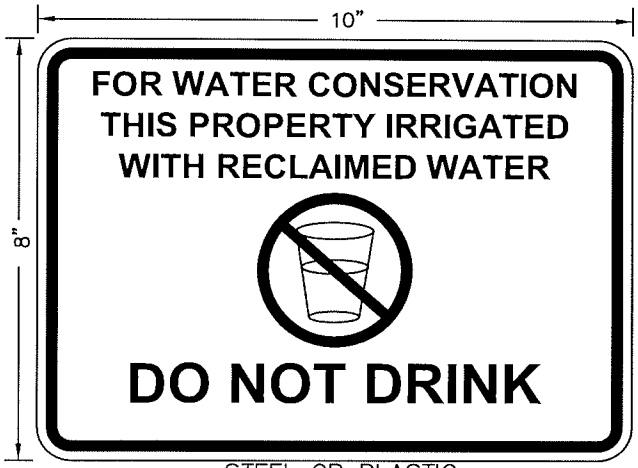

STEEL OR PLASTIC SIGNS
N.T.S.

NOTES

1. SIGNS ARE TO BE PLACED AT EACH USER OF RECLAIMED WATER NEAR THE RECLAIMED METER
2. ALL SIGNS ARE WHITE WITH PURPLE LETTERING (COLOR TO BE APPROVED BY FULTON COUNTY)
3. STEEL OR PLASTIC SIGNS MAY BE AFFIXED TO OTHER POSTS OR STRUCTURES THAN THOSE PROVIDED BY FULTON COUNTY
4. LABEL SIGNS MUST BE AFFIXED TO WHITE DRIVABLE MARKER #CIB-380 (MANUFACTURED BY CARSONITE INTERNATIONAL) AND PROTRUDE ABOVE FINISHED GRADE NO MORE THAN 36" AND NO LESS THAN 18"

FULTON COUNTY STANDARD DETAIL 610
CUSTOMER SIGNS

DATE	REVISIONS	DATE	REVISIONS

DGS/DRN/CHKD: CMS
APPROVED: ML
DATE: 12-2-05

FULTON COUNTY

FULTON COUNTY PUBLIC WORKS
141 PRYOR ST. ATLANTA, GA. 30303
404-730-7400 FAX: 404-224-0498

DRAWING NO.
610

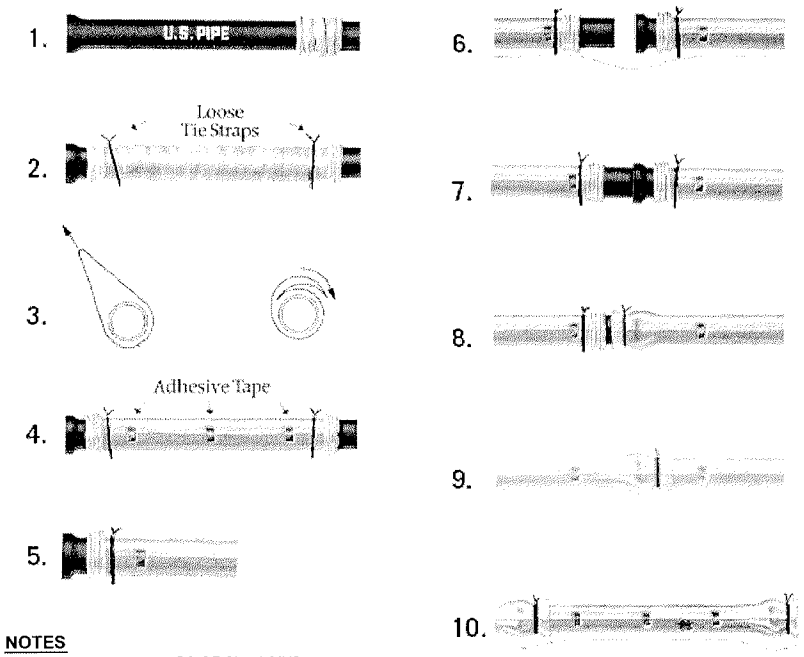

NOTES

1. REMOVE ALL LUMPS OF CLAY, MUD, CINDERS, ETC. WHICH MAY HAVE ACCUMULATED ON THE SURFACE OF THE PIPE. A POLYETHYLENE TUPE SHOULD BE CUT SO THAT IT IS APPROXIMATELY TWO FEET LONGER THAN THE PIPE SECTION. SLIP THE TUBE ONTO THE PIPE. ALLOW APPROXIMATELY ONE FOOT OF THE TUBE TO OVERHANG EACH END OF THE PIPE.
2. PUSH BACK THE OVERHANG TUBE ENDS UNTIL THEY CLEAR THE PIPE ENDS
3. TAKE UP THE SLACK IN THE TUBE TO MAKE A SNUG BUT NOT TIGHT FIT. FOLD EXCESS BACK OVER THE TOP OF PIPE
4. SECURE THE FOLD WITH POLYETHYLENE COMPATIBLE ADHESIVE TAPE AT SEVERAL LOCATIONS ALONG THE PIPE BARREL
5. DIG A SHALLOW BELL-HOLE IN THE TRENCH BOTTOM AT THE JOINT LOCATION
6. PLACE PIPE INTO THE TRENCH
7. ASSEMBLE THE JOINT
8. PULL THE POLYETHYLENE TUBE END OF THE PREVIOUSLY INSTALLED PIPE OVER THE NEW PIPE AND SECURE WITH THE TIE STRAP FROM THE PRECEDING PIPE BELL
9. OVERLAP THE SECURED TUBE END OF THE NEW PIPE SECTION. SECURE THE NEW TUBE END IN PLACE WITH THE SPIGOT END TIE STRAP
10. REPAIR ALL RIPS, TEARS, OR OTHER TUBE DAMAGE WITH SUITABLE ADHESIVE TAPE. PIN POINT PUNCTURES NEED NOT BE REPAIRED

FULTON COUNTY STANDARD DETAIL 611
POLYETHYLENE ENCASEMENT INSTALLATION

DATE	REVISIONS	DATE	REVISIONS

DGS/DRN/CHKD: CMS
APPROVED: ML
DATE: 12-2-05

FULTON COUNTY

FULTON COUNTY PUBLIC WORKS
141 PRYOR ST. ATLANTA, GA. 30303
404-730-7400 FAX: 404-224-0498

DRAWING NO.
611

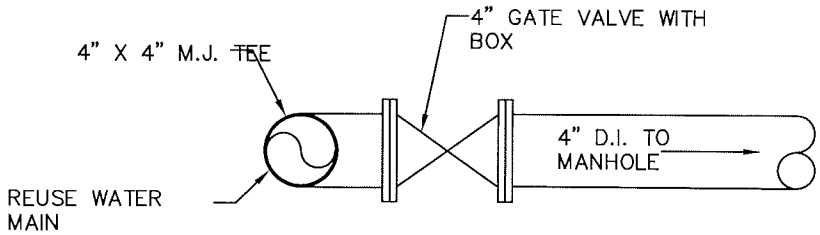

CUL-DE-SAC
REUSE FLUSH POINT DETAIL

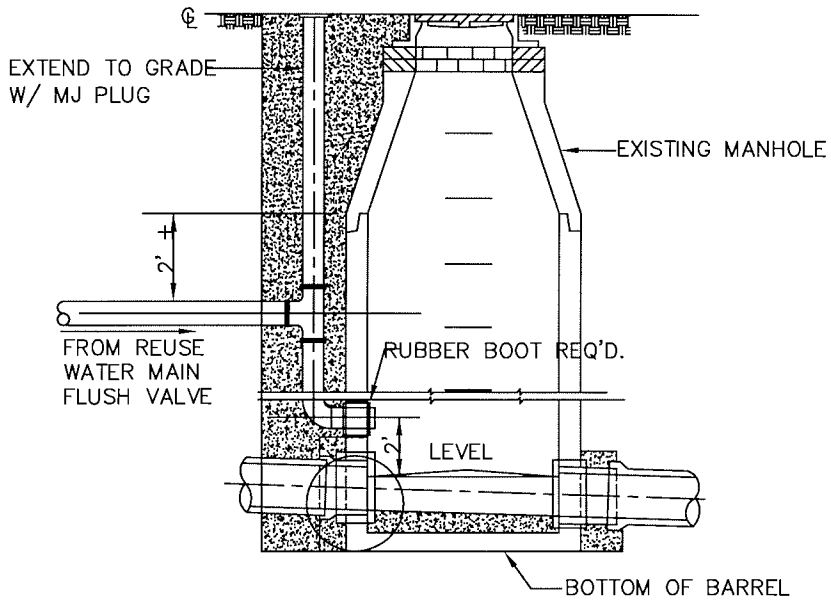

MANHOLE CONNECTION DETAIL

		DATE	REVISIONS	DATE	REVISIONS				
FULTON COUNTY STANDARD DETAIL 612 CUL-DE-SAC FLUSH POINT DETAIL						DGS/DRN/CHKD: CMS APPROVED: ML DATE: 12-2-05	FULTON COUNTY	FULTON COUNTY PUBLIC WORKS 141 PRYOR ST. ATLANTA, GA. 30303 404-730-7400 FAX: 404-224-0498	DRAWING NO. 612

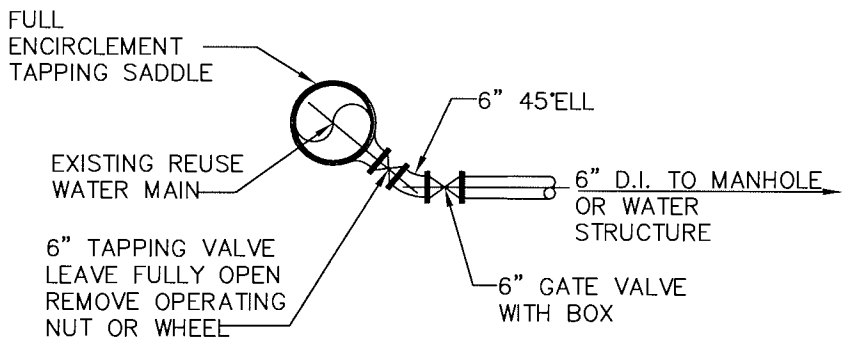

REUSE TAP AND VALVE DETAIL

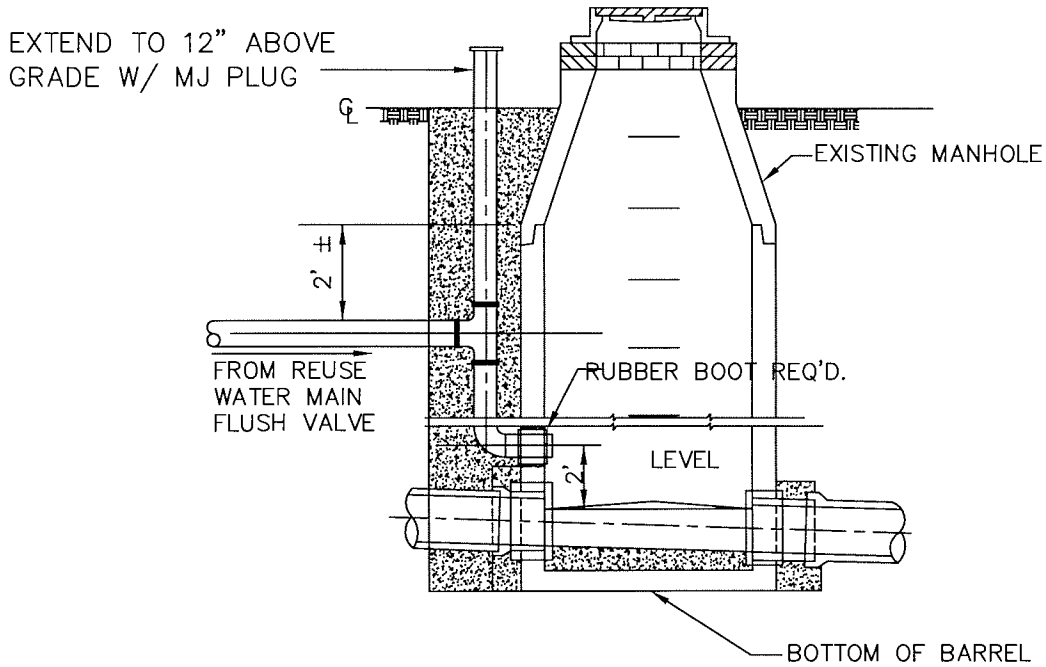

FULTON COUNTY STANDARD DETAIL 613 IN LINE FLUSH POINT DETAIL		DATE	REVISIONS	DATE	REVISIONS	DGS/DRN/CHKD: CMS APPROVED: ML DATE: 12-2-05	FULTON COUNTY	FULTON COUNTY PUBLIC WORKS 141 PRYOR ST. ATLANTA, GA. 30303 404-730-7400 FAX: 404-224-0498	DRAWING NO. 613

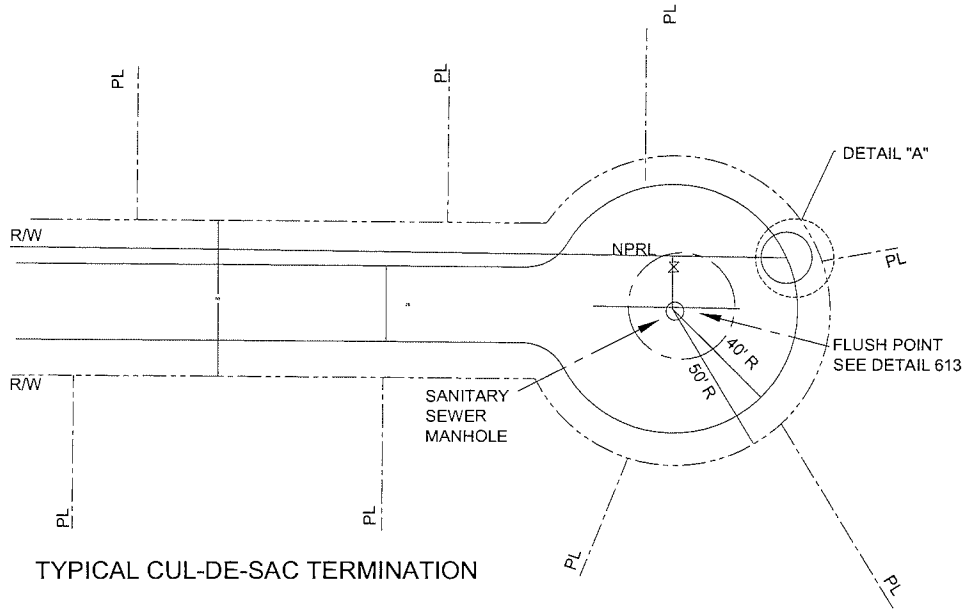

TYPICAL CUL-DE-SAC TERMINATION

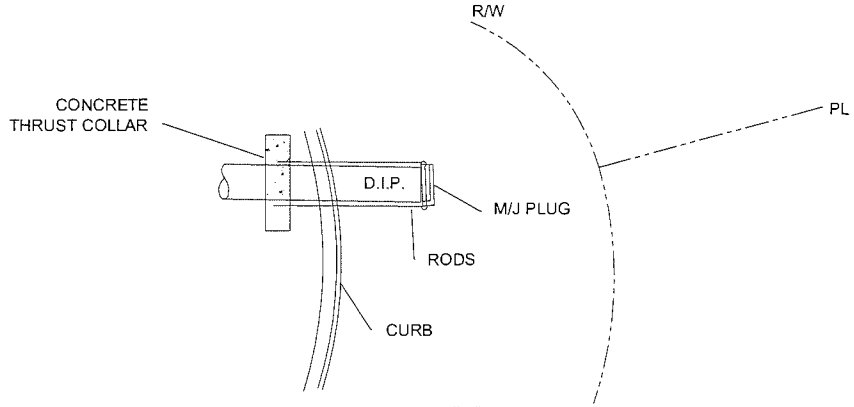

DETAIL "A"
NOT TO SCALE

FULTON COUNTY STANDARD DETAIL 614 NPRL TERMINATION CUL-DE-SAC		DATE	REVISIONS	DATE	REVISIONS	DGS/DRN/CHKD: CMS APPROVED: REW DATE: 12-02-05	FULTON COUNTY	FULTON COUNTY PUBLIC WORKS 141 PRYOR ST. ATLANTA, GA. 30303 404-730-7400 FAX: 404-730-6325	DRAWING NO. 614

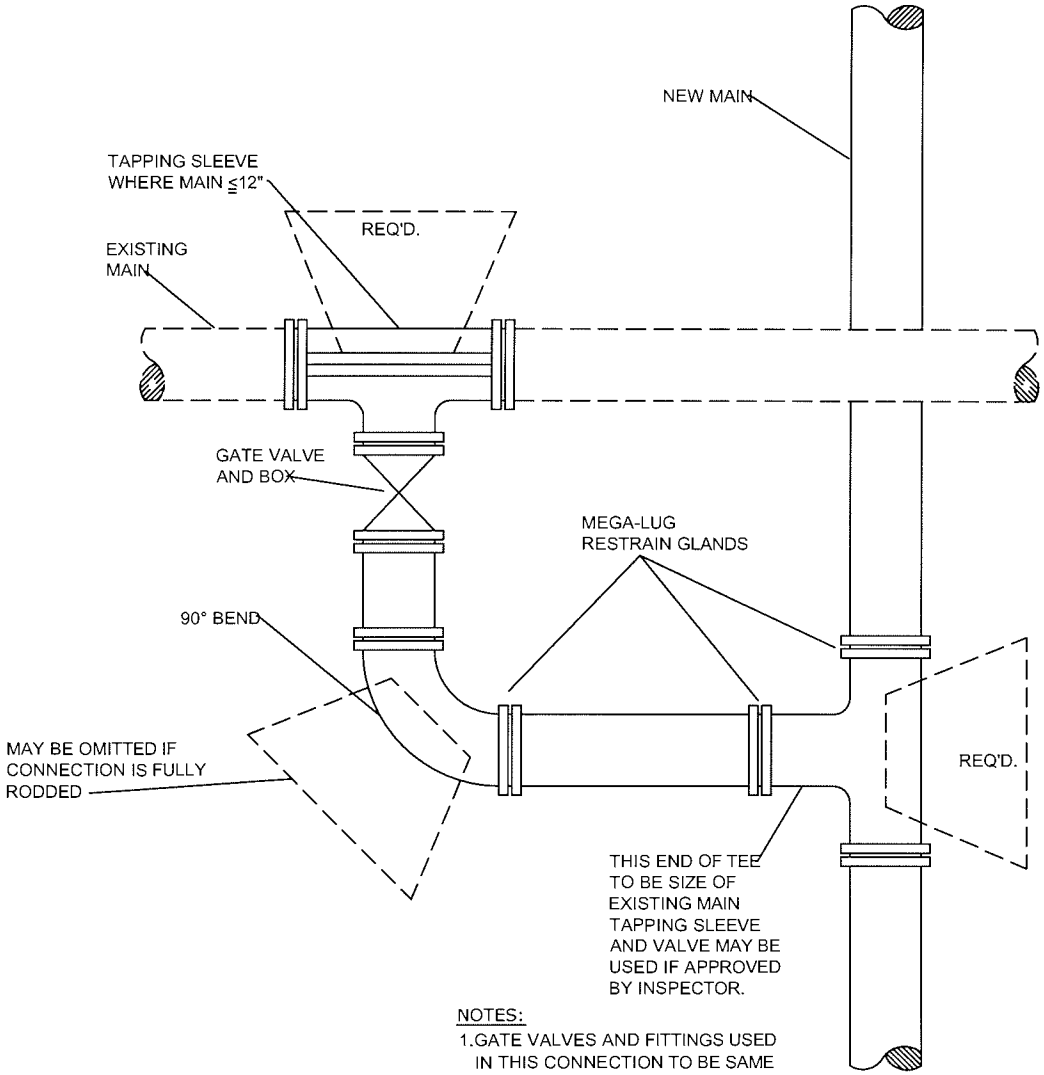

NOTES:

1. GATE VALVES AND FITTINGS USED IN THIS CONNECTION TO BE SAME SIZE AS EXISTING MAIN WHERE EXISTING MAIN IS 12" OR SMALLER.

		DATE	REVISIONS	DATE	REVISIONS				
FULTON COUNTY STANDARD DETAIL 615 ROUND CONNECTION DETAIL						DGS/DRN/CHKD: CMS APPROVED: ML DATE: 12-2-05	FULTON COUNTY	FULTON COUNTY PUBLIC WORKS 141 PRYOR ST. ATLANTA, GA. 30303 404-730-7400 FAX: 404-224-0498	DRAWING NO. 615

INDEX

DWG NO.	DESCRIPTION
700	INDEX AND GENERAL NOTES
701	GREASE/SOLIDS/OIL INTERCEPTOR 4 TANKS IN SERIES
702	SINGLE TANKS
703	TRASH COMPACTOR AND DUMPSTER PAD DETAILS
704	SANITARY SEWER EASEMENT
705	STRUCTURAL PLATE PIPE CULVERT
706	DETAIL OF OPTIONAL STEEL PIER
707	SERVICE CONNECTION ON NEW SEWERS
708	SERVICE CONNECTION ON EXISTING SEWERS
709	SERVICE CONNECTION CLEANOUT
710	WATERSTOP COLLAR
711	SEWER LATERAL INSTALLATION DETAILS FOR CURBED STREETS

GENERAL NOTES

FULTON COUNTY STANDARD DETAIL
INDEX AND GENERAL NOTES

DATE	REVISIONS	DATE	REVISIONS

DGS/DRN/CHKD: CMS
APPROVED: REW
DATE: 12-02-05

FULTON COUNTY

FULTON COUNTY PUBLIC WORKS
141 PRYOR ST. ATLANTA, GA. 30303
404-730-7400 FAX: 404-730-6325

DRAWING NO. 700

INSPECTIONS:
1. ALL PRETREATMENT SYSTEMS ARE REQUIRED TO BE INSPECTED PRIOR TO BACKFILLING CONTACT PUBLIC WORKS COMMERCIAL TREATMENT.
2. FINAL INSPECTIONS ARE REQUIRED ON ALL PRETREATMENT SYSTEMS PRIOR TO USE.

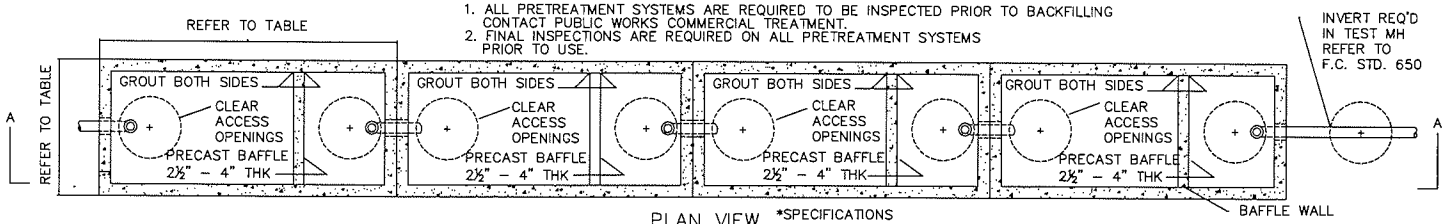

PLAN VIEW
N.T.S.

*SPECIFICATIONS
CONCRETE MINIMUM STRENGTH 4000 PSI AT 28 DAYS. STEEL REINFORCEMENT ASTM–A–515.75, GRADE 50, ONE INCH COVER MINIMUM DESIGN LOADING AASHO HS20–44. CONSTRUCTION JOINT SEALED WITH ONE INCH DIA. BUTYL RUBBER OR EQUIVALENT.

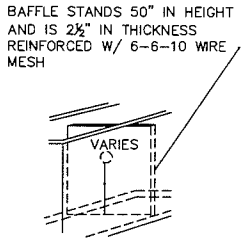

BAFFLE WALL
N.T.S.

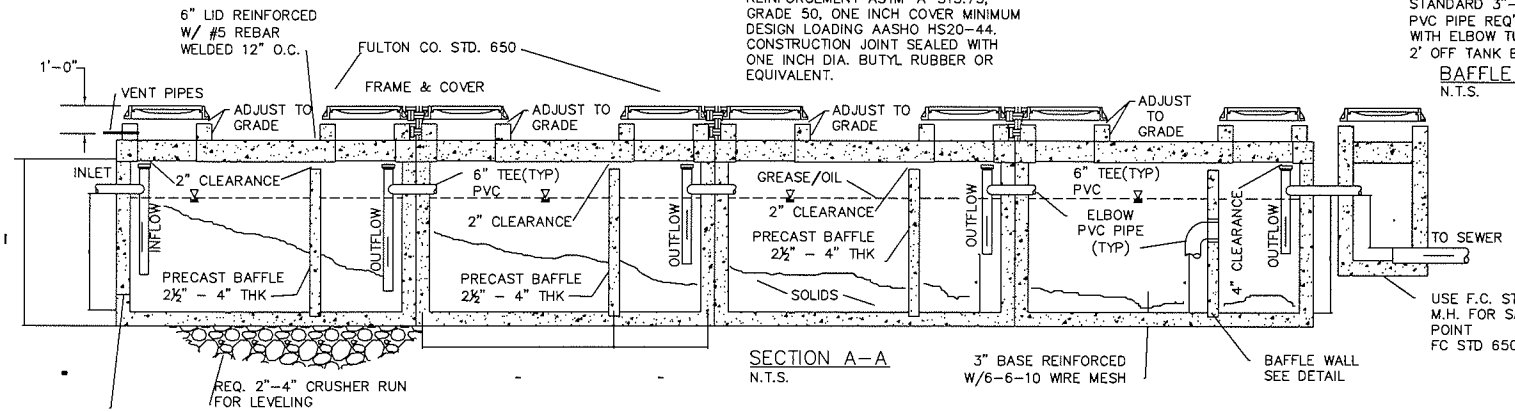

SECTION A–A
N.T.S.

GALLON CAPACITY	*OUTSIDE DIMENSIONS (L) LENGTH	(W) WIDTH	(H) HEIGHT	INLET TEE HGT.	OUTLET TEE HGT.
				*VARIES BASED ON TANK SIZE	
3000	15'–7"	9'–7"	8'–6.5"	5'–2"	5'–0"
1500	11'–0"	6'–0"	4'–7"	3'–10"	4'–0"
1000	8'–6"	5'–3"	4'–6"	3'–10"	4'–0"

*DIMENSIONS OF PREFAB CONCRETE TANKS MAY VARY BASED ON MANUFACTURER, HOWEVER THE GALLON CAPACITY MUST BE EQUIVALENT TO THE TANK SIZE SPECIFIED FOR INSTALLATION.

NOTES:
1. ANY ALTERNATIVE PRETREATMENT SYSTEMS SHALL BE APPROVED BY WATER AND POLLUTION CONTROL SECTION PRIOR TO INSTALLATION.
2. USE CONCRETE PREFAB TANKS.
3. NO INTERCEPTOR SHALL BE LESS THAN 1,000 GALLONS WHERE SEATING IS LESS THAN 50 AND NO SINGLE CHAMBER INTERCEPTOR SHALL BE GREATER THAN 3000 GALLONS.
4. FOR RESTAURANTS USE MINIMUM ONE 1515 GALLON TANK PER 100 SEATS.
5. MULTI–CHAMBERED TANKS SHALL BE CONNECTED BY 8"ABS OR PVC PIPE; MIN. 6" PVC ACCEPTED.
6. SAMPLING MANHOLE SHALL BE INSTALLED UNLESS EXCLUDED BY W&PC.
7. ALL MANHOLES MUST ADJUST TO GRADE.
8. DISTANCE BETWEEN MULTIPLE TANKS NO GREATER THAN 12".
9. TEST MANHOLE NO GREATER THAN 6 FEET AFTER PRETREATMENT SYSTEM.
10. MULTIPLE TANKS MUST BE PLACED IN TANDEM (SINGLE LINE).

FULTON COUNTY STANDARD DETAIL 701
GREASE/SOLIDS/OIL INTERCEPTOR
4 TANKS IN SERIES

DATE	REVISIONS	DATE	REVISIONS

DGS/DRN/CHKD: JM
APPROVED: REW
DATE: 12–2–05

FULTON COUNTY

FULTON COUNTY PUBLIC WORKS
141 PRYOR ST. ATLANTA, GA. 30303
404–730–7400 FAX: 404–224–0498

DRAWING NO. 701

GALLON CAPACITY	*OUTSIDE DIMENSIONS			INLET TEE HGT.	OUTLET TEE HGT.
	LENGTH	WIDTH	HEIGHT	*VARIES BASED ON TANK SIZE	
3000	15'–7"	9'–7"	8'–6.5"	5'–2"	5'–0"
1500	11'–0"	6'–0"	4'–7"	3'–10"	4'–0"
1000	8'–6"	5'–3"	4'–6"	3'–10"	4'–0"
750	7'–0"	4'–8"	4'–6"	3'–10"	4'–0"

*DIMENSIONS OF PREFAB CONCRETE TANKS MAY VARY BASED ON MANUFACTURER, HOWEVER THE GALLON CAPACITY MUST BE EQUIVALENT TO THE TANK SIZE SPECIFIED FOR INSTALLATION.

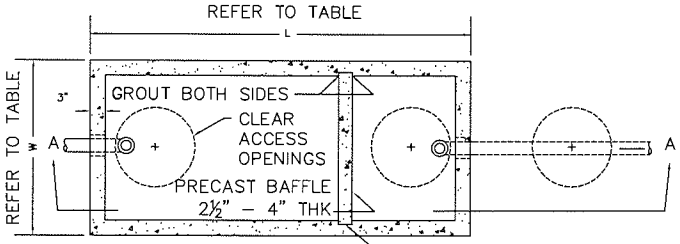

PLAN VIEW
N.T.S.

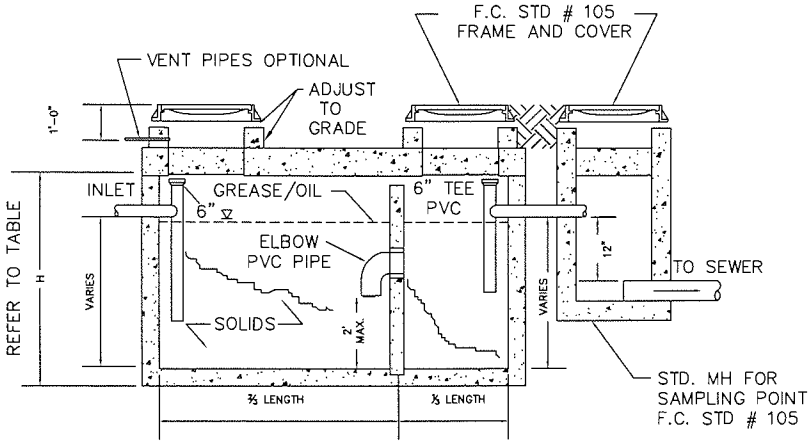

SECTION A–A
N.T.S.

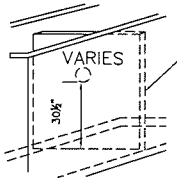

BAFFLE STANDS 50" IN HEIGHT AND IS 2½" IN THICKNESS REINFORCED W/ 6–6–10 WIRE MESH

PIPE DIAMETER MAY VARY STANDARD 3"–5"
PVC PIPE REQ'D ON WALL WITH ELBOW TURNED DOWN MAX. 2' OFF TANK BOTTOM

* BAFFLE WALL OPTIONAL ON SINGLE TANK INSTALLATIONS.

BAFFLE WALL*
N.T.S.

FULTON COUNTY STANDARD DETAIL 702
SINGLE TANK

DATE	REVISIONS	DATE	REVISIONS

DGS/DRN/CHKD: JM
APPROVED: REW
DATE: 12–2–05

FULTON COUNTY

FULTON COUNTY PUBLIC WORKS
141 PRYOR ST. ATLANTA, GA. 30303
404–730–7400 FAX: 404–224–0498

DRAWING NO. 702

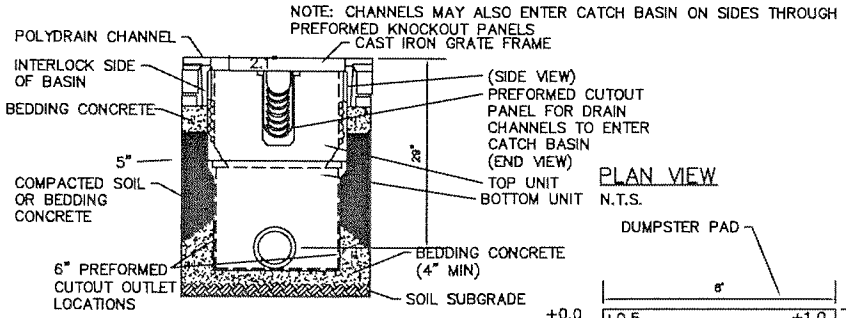

SIDE VIEW
N.T.S.

PLAN VIEW
N.T.S.

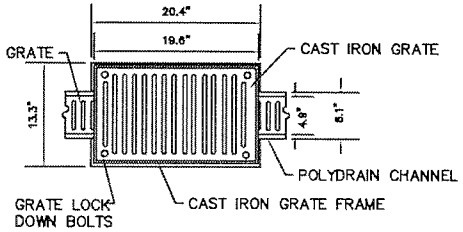

500 SERIES CATCH BASIN INTERCONNECTED POLYDRAIN CHANNELS OR APPROVED EQUAL

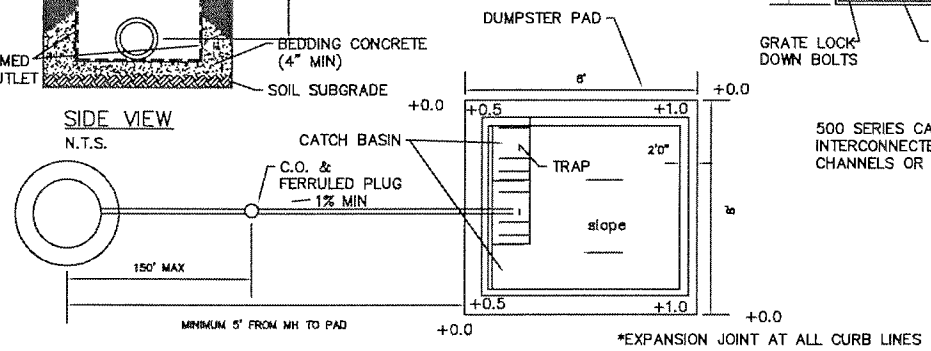

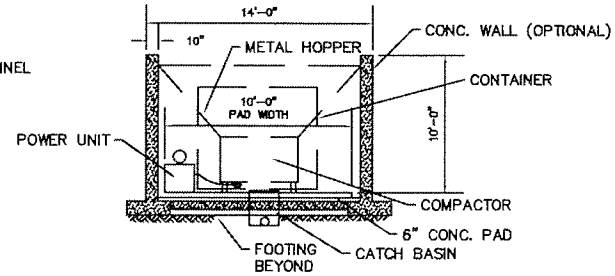

REAR ELEVATION
N.T.S.

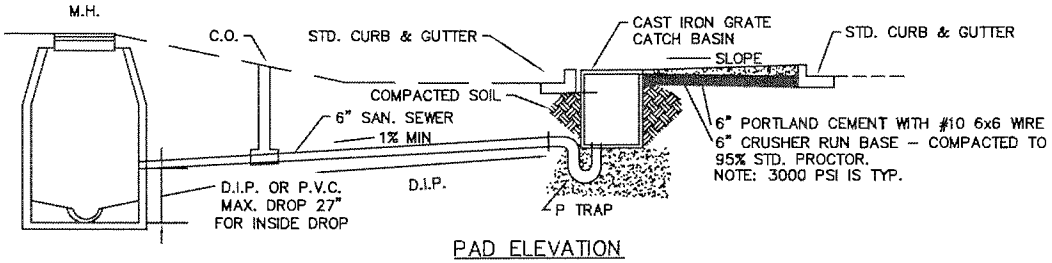

PAD ELEVATION
N.T.S.

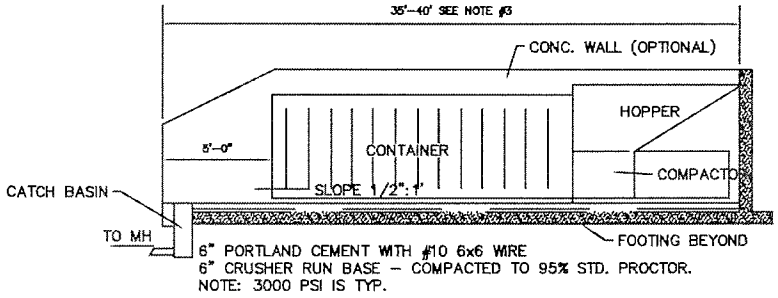

SIDE ELEVATION
N.T.S.

TRASH COMPACTOR

NOTES:
1. WATER BIBB REQUIRED WITHIN 50' OF PAD FOR CLEANSING.
2. APPROVAL FROM HEALTH DEPT. REQUIRED.
3. COMPACTOR PAD TO BE 10'-0" WIDE AND A LENGTH OF 5'-0" GREATER THAN THE COMBINED LENGTH OF THE COMPACTOR AND CONTAINER.
4. RUBBER BOOT REQUIRED FOR P.V.C. PIPE. (MANHOLE CONNECTOR) WATER BIBB TO HAVE BACK FLOW PREVENTER.
5. DO NOT CONNECT DRAIN TO GREASE TRAP. SURFACE WATER RUNOFF MUST BE SLOPED AWAY FROM PAD.
6. DO NOT ALLOW STORM WATER RUNOFF ON PAD.
7. 4 FOOT CHAIN LINK FENCE WITH 3–4 FOOT ACCESS GATE IS REQUIRED AROUND ALL COMPACTORS AND HOPPERS.

FULTON COUNTY STANDARD DETAIL 703 TRASH COMPACTOR AND DUMPSTER PAD DETAILS		DATE	REVISIONS	DATE	REVISIONS	DGS/DRN/CHKD: JM APPROVED: REW DATE: 12-2-05	FULTON COUNTY FULTON COUNTY PUBLIC WORKS 141 PRYOR ST. ATLANTA, GA. 30303 404-730-7400 FAX: 404-224-0498	DRAWING NO. 703

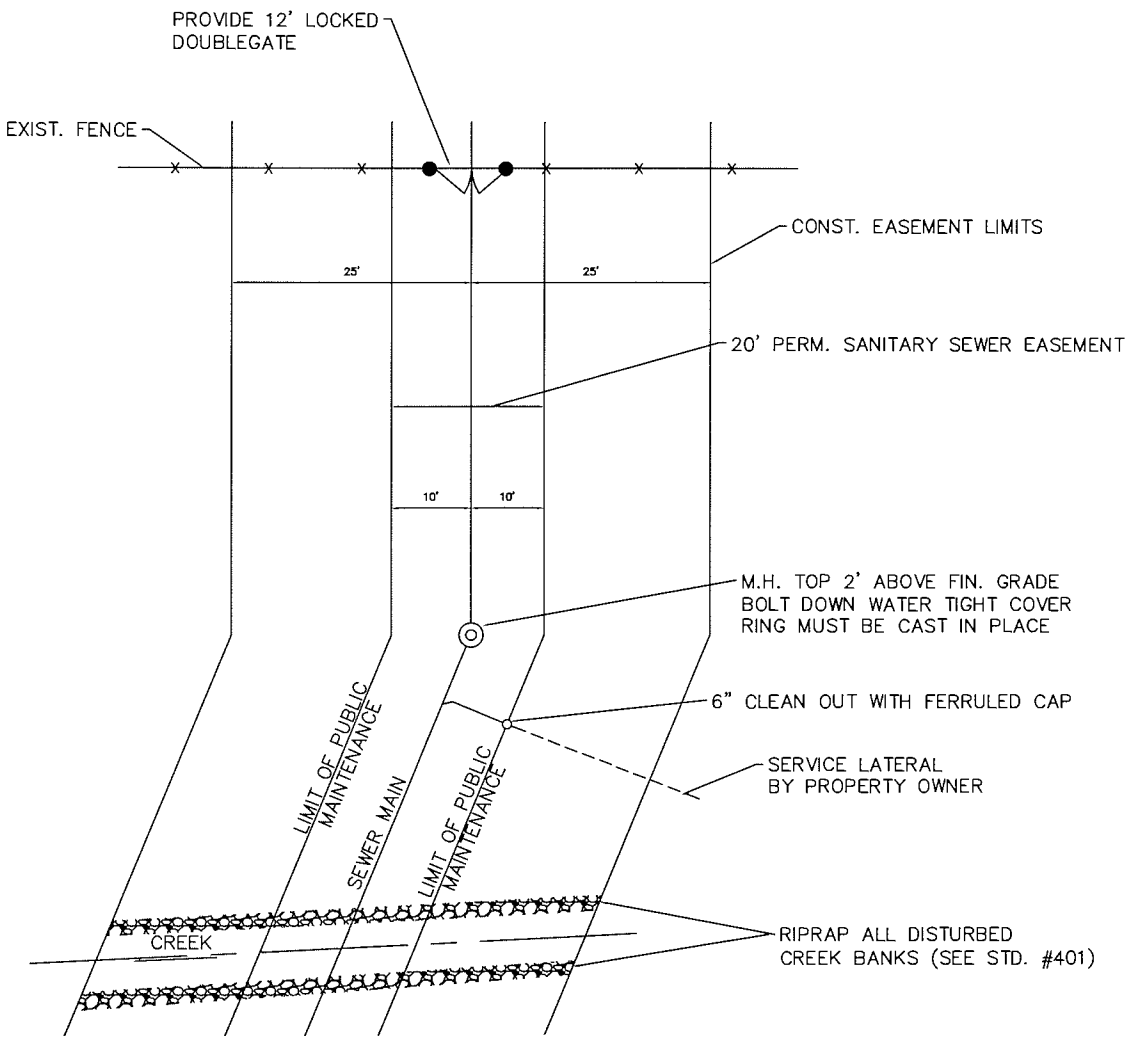

NOTES:

1. NO POOLS STRUCTURES DECKS, BRIDGES OR PATIOS MAY BE PLACED IN THE PERM. EASEMENT.
2. CLEAR ALL TREES IN PERM EASEMENT AND MAINTAIN CLEARANCE.
3. RESEED, FERTILIZE AND MULCH ALL DISTURBED AREAS PER EROSION CONTROL STANDARDS, MAINTAIN 1% SLOPE DRAINAGE.
4. NO PERMANENT STRUCTURES INSIDE PERMANENT EASEMENT.
5. NO BURY PITS ALLOWED IN EASEMENT.

FULTON COUNTY STANDARD DETAIL 704
SANITARY SEWER EASEMENT

DATE	REVISIONS	DATE	REVISIONS

DGS/DRN/CHKD: JM
APPROVED: REW
DATE: 12-2-05

FULTON COUNTY

FULTON COUNTY PUBLIC WORKS
141 PRYOR ST. ATLANTA, GA. 30303
404-730-7400 FAX: 404-224-0498

DRAWING NO.
704

MINIMUM HEIGHT OF COVER

UNPAVED AND FLEXIBLE PAVEMENTS
FOR 72"DIA. TO 120" DIA.–1/3 DIA.
FOR 120" DIA. AND OVER – NOT LESS THAN 24".

RIGID PAVEMENTS
FOR 72" DIA. TO 120" DIA.– 1/7 DIA. BUT NOT LESS THAN 12"
FOR 120" DIA. AND OVER– NOT LESS THAN 18".

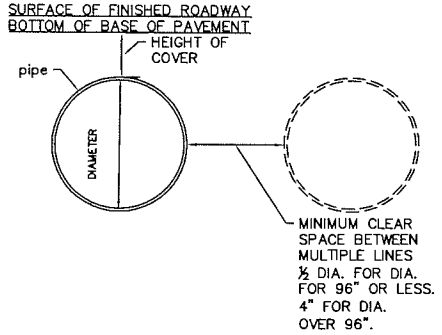

GENERAL NOTES:
1. SPECIFICATIONS – GEORGIA STANDARD
2. DESIGN DATA – H–20 LIVE LOAD
3. GAGES SHOWN ARE MINIMAL STRUCTURAL REQUIREMENTS FOR USE WITH ADEQUATE BACKFILL.
4. FOR END FINISH, SHAPE OR CONDITION OTHER THAN SHOWN, SEE SPECIAL DESIGN.

NOTES:
1. GAGES SHOWN IN ABOVE TABLE ARE FOR STRUCTUAL PLATE PIPE ASSEMBLED WITH A 4 BOLT PER FOOT OF LONGITUDINAL SEAM AND VERTICALLY ELONGATED 5% BY SHOP FORMING, EXCEPT AS NOTED IN NO. 2.
2. BEYOND HEIGHTS OF COVER FOR 4 BOLTS AND TO HEIGHTS OF COVER SHOWN FOR 6 BOLTS, IN COLUMN AT RIGHT, NO.1 GAGE STRUCTUAL PLATE PIPE WITH 6 BOLTS PER FOOT OF LONGITUDINAL SEAM AND VERTICALLY ELONGATED 3% BY SHOP FORMING SHALL BE USED.
3. ONLY R.C.P ALLOWED UNDER COUNTY ROADS.

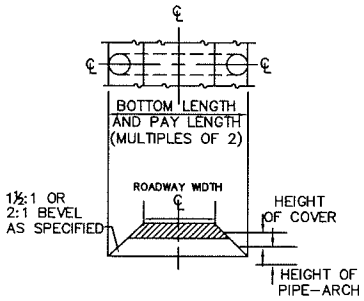

AREA SQ.FT	DIA. INCHES	HEIGHT OF COVER (FEET) 1–5	6 –10	11–15	16–20	21–25	26 –30	31– 35	36 –40	41–45	46–50	51–55	56–60	61–70	71–80	81–90	91–100	1 GAGE 6 BOLTS
		MINIMUM THICKNESS U.S. STD. GAGE – 4 BOLTS																
28	72							12	12	10	10	8	8	7	5	3	1	165'
33	78						12	12	10	10	8	8	8	5	3	1		150'
38	84					12	12	12	10	10	8	8	7	5	3	1		140'
44	90	12	12	12	12	12	12	10	10	8	8	7	5	3	1			130'
50	96	12	12	12	12	12	10	10	10	8	7	7	5	3	1			125'
57	102	12	12	12	12	10	10	10	8	8	7	5	5	1				115'
64	108	12	12	12	10	10	10	10	8	7	5	5	3	1				110'
71	114	10	12	10	10	10	10	8	8	7	5	5	3	1				105'
79	120	10	12	10	10	10	10	8	7	5	5	3	1					100'
87	126	10	12	10	10	10	10	8	7	5	3	3	1					95'
95	132	10	10	10	10	10	8	8	7	5	3	1	1					90'
104	138	10	10	10	10	10	8	7	5	3	3	1						85'
113	144	10	10	10	10	8	8	7	5	3	1	1						80'
123	150	10	10	10	8	8	8	7	5	3	1							80'
133	156	10	10	10	8	8	8	5	3	1	1							75'
145	162	10	10	10	8	8	7	5	3	1								70'
154	168	10	10	10	8	8	7	5	3	1								70'
165	174	8	10	8	8	8	7	5	3	1								65'
177	180	8	10	8	8	8	5	3	1									65'

FOR STRUCTURES IN THIS ZONE, SEE NOTE NO. 2 ABOVE

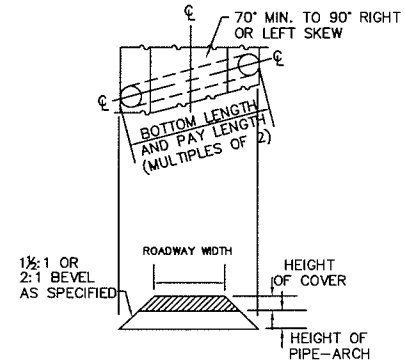

FULTON COUNTY STANDARD DETAIL 705
STANDARD
STRUCTURAL PLATE
PIPE CULVERT

DATE	REVISIONS	DATE	REVISIONS

DGS/DRN/CHKD: JM
APPROVED: REW
DATE: 12–2–05

FULTON COUNTY

FULTON COUNTY PUBLIC WORKS
141 PRYOR ST. ATLANTA, GA. 30303
404–730–7400 FAX: 404–224–0498

DRAWING NO. 705

DETAIL OF CLAMP
N.T.S.

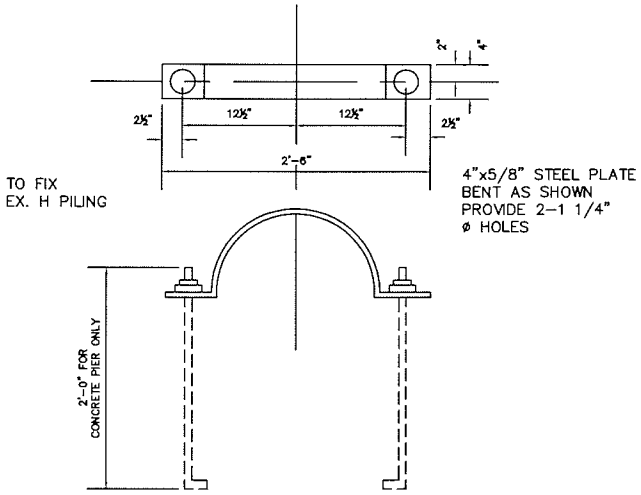

2-1"ø STAINLESS STEEL ANCHOR BOLTS
WITH A.S.A. HEX
NUT AND WASHERS

NOTE:
ENGINEER TO SUBMIT DESIGN.

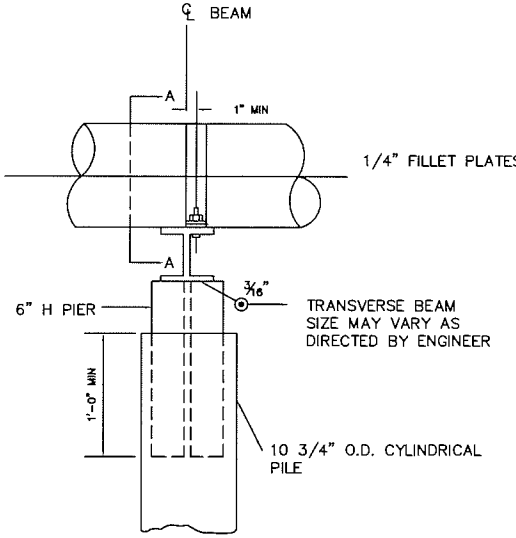

SECTION A-A
N.T.S.

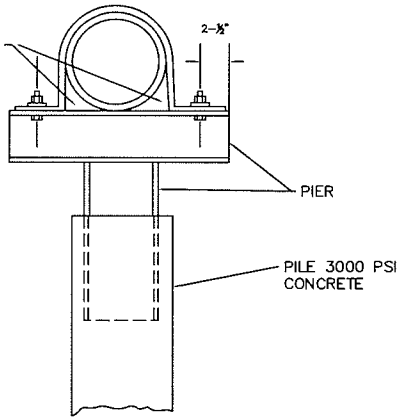

NOTE:
PILE TO BE DRIVEN TO REFUSAL OR 10 TON
BEARING MIN., THEN FILLED WITH 3000 P.S.I. CONCRETE.
TRANSVERSE BEAM TO BE WELDED TO PIER BEFORE SETTING CONCRETE.

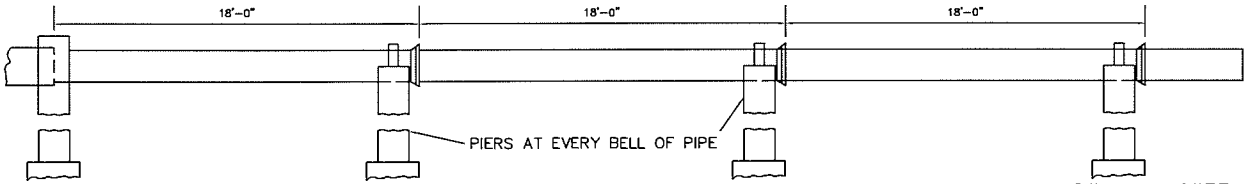

PIER LOCATION TO BE DETERMINED BY ENGINEER OR FULTON COUNTY INSPECTOR.

DETAIL OF OPTIONAL STEEL PIER
N.T.S.

FULTON COUNTY STANDARD DETAIL 706 DETAIL OF OPTIONAL STEEL PIER		DATE	REVISIONS	DATE	REVISIONS	DGS/DRN/CHKD: JM APPROVED: REW DATE: 12-2-05	FULTON COUNTY	FULTON COUNTY PUBLIC WORKS 141 PRYOR ST. ATLANTA, GA. 30303 404-730-7400 FAX: 404-224-0498	DRAWING NO. 706

NOTES:
1. CONNECTION TO NEW SEWER SHALL BE WITH TEE OR WYE.
2. NO TEES OR WYES ON SEWERS LARGER THAN 18"ø.
3. WHERE SERVICE LINE CROSSES STATE HWY R/W, PIPE AND FITTINGS SHALL BE MECHANICAL JOINT D.I. PIPE AS SPECIFIED UNDER ITEM NO. 7 D.I. PIPE AND TRENCH SHALL BE BACKFILLED WITH CRUSED STONE.

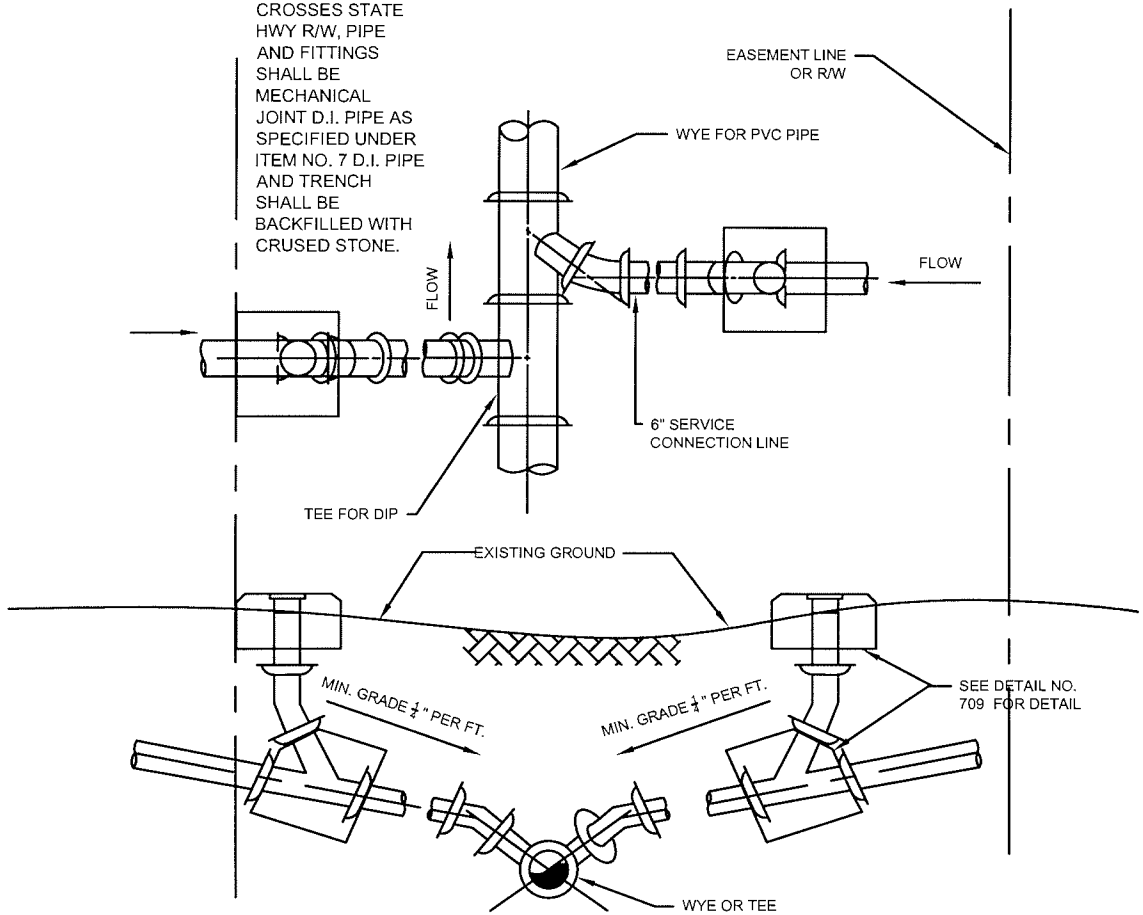

		DATE	REVISIONS	DATE	REVISIONS				
FULTON COUNTY STANDARD DETAIL 707 SERVICE CONNECTION ON NEW SEWERS						DGS/DRN/CHKD: JM APPROVED: REW DATE: 12-2-05	FULTON COUNTY	FULTON COUNTY PUBLIC WORKS 141 PRYOR ST. ATLANTA, GA. 30303 404-730-7400 FAX: 404-224-0498	DRAWING NO. 707

NOTES:

1. HOLE IN EXISTING SEWER SHALL BE CORED.

2. CONNECT SERVICE TO SEWER WITH: -BOOT ON RCP AND VCP SEWERS -TAPPING SADDLE ON DIP SEWERS
-MANUFACTURED SADDLE ON PVC PIPE SEWERS

3. NO HAMMER TAPS

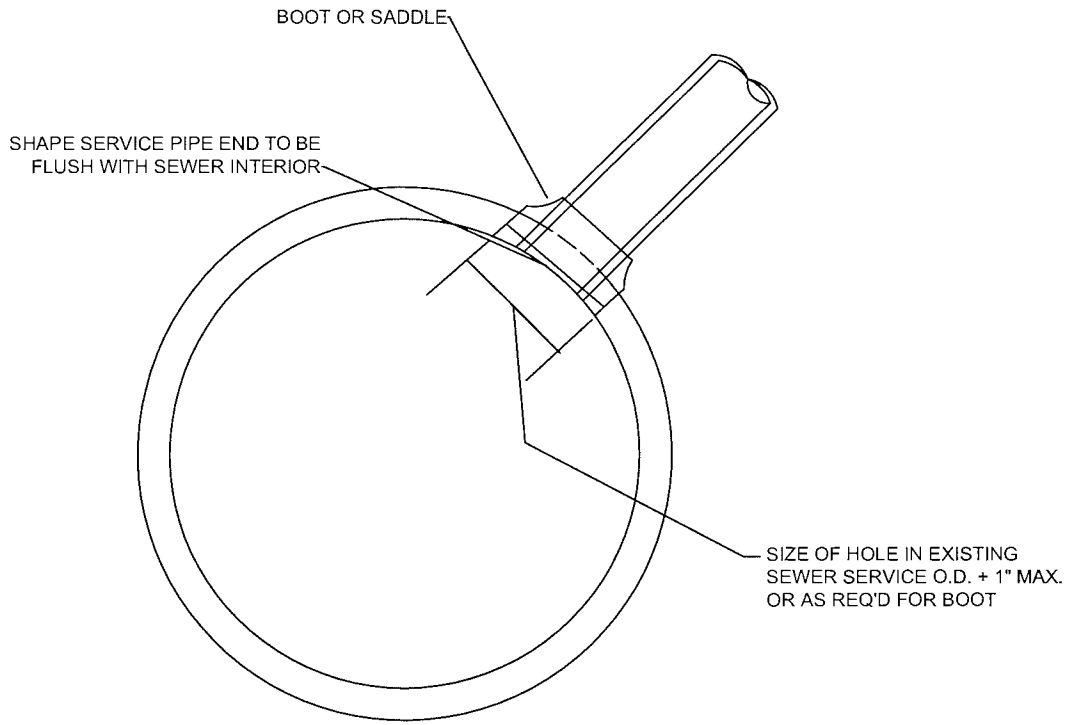

FULTON COUNTY STANDARD DETAIL 708 SERVICE CONNECTION ON EXISTING SEWERS		DATE	REVISIONS	DATE	REVISIONS	DGS/DRN/CHKD: JM APPROVED: REW DATE: 12-2-05	FULTON COUNTY	FULTON COUNTY PUBLIC WORKS 141 PRYOR ST. ATLANTA, GA. 30303 404-730-7400 FAX: 404-224-0498	DRAWING NO. 708

NOTES:
1. TOP OF SERVICE BOX SHALL BE FLUSH WITH FINAL SURFACE IN SIDEWALKS AND PAVED AREAS.

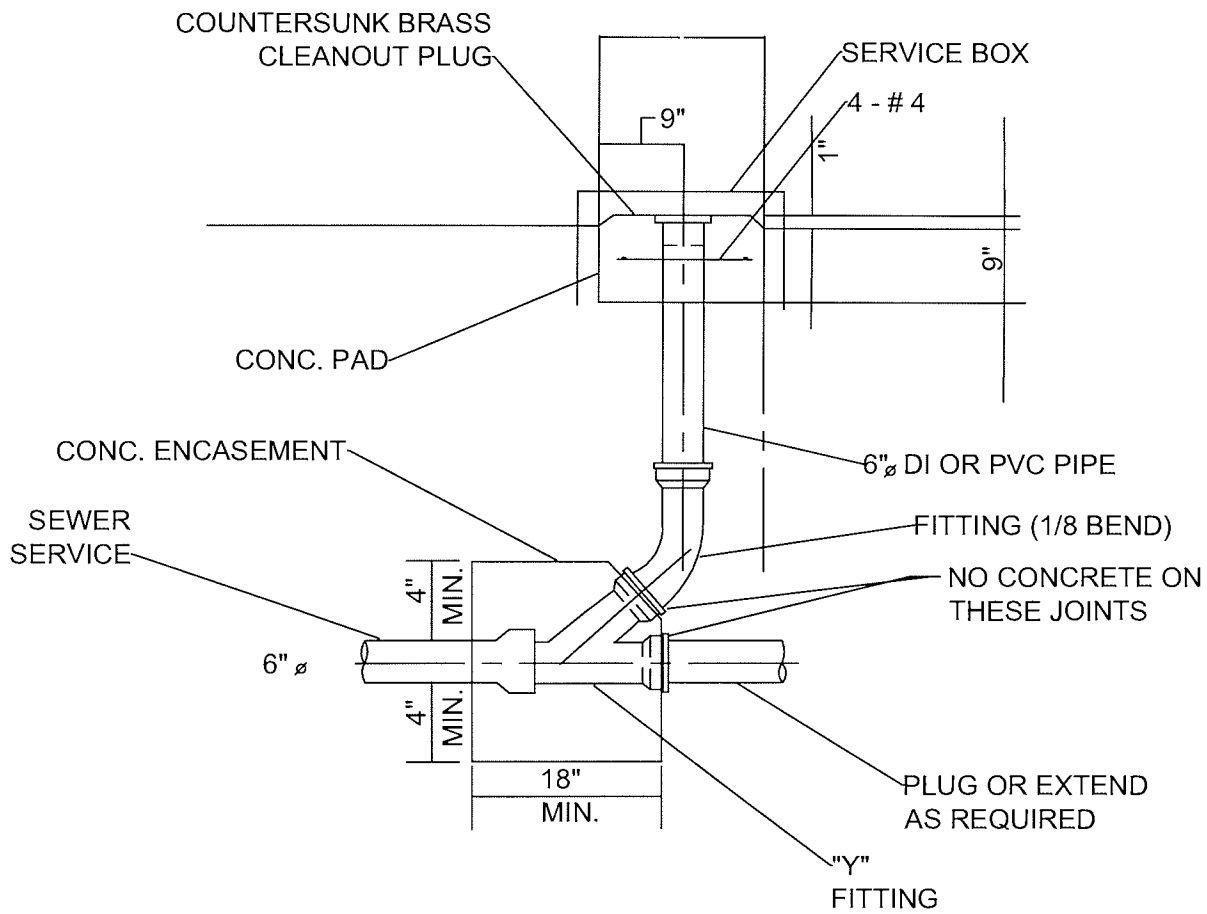

FULTON COUNTY STANDARD DETAIL 709 SERVICE CONNECTION CLEANOUT		DATE	REVISIONS	DATE	REVISIONS	DGS/DRN/CHKD: CMS APPROVED: REW DATE: 12-2-05	FULTON COUNTY	FULTON COUNTY PUBLIC WORKS 141 PRYOR ST. ATLANTA, GA. 30303 404-730-7400 FAX: 404-224-0498	DRAWING NO. 709

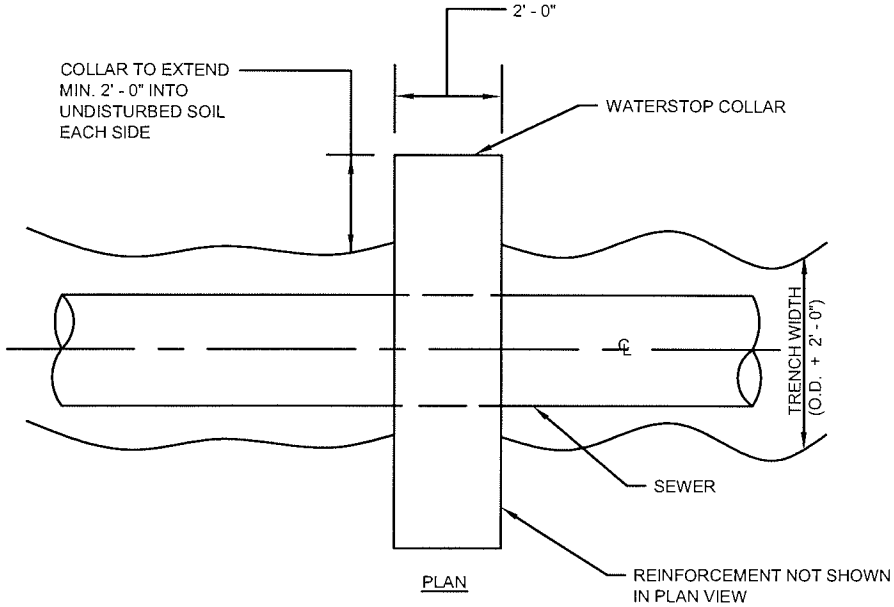

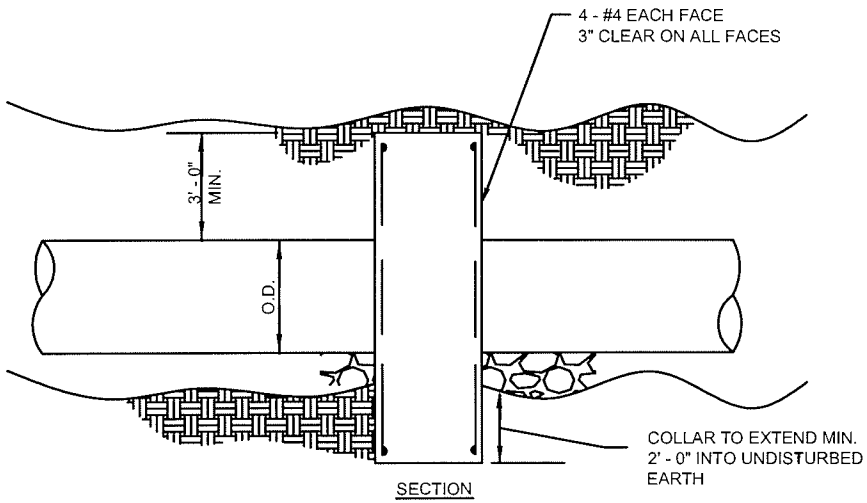

FULTON COUNTY STANDARD DETAIL 710 WATERSTOP COLLAR		DATE	REVISIONS	DATE	REVISIONS	DGS/DRN/CHKD: JM APPROVED: REW DATE: 12-2-05	FULTON COUNTY	FULTON COUNTY PUBLIC WORKS 141 PRYOR ST. ATLANTA, GA. 30303 404-730-7400 FAX: 404-224-0498	DRAWING NO. 710

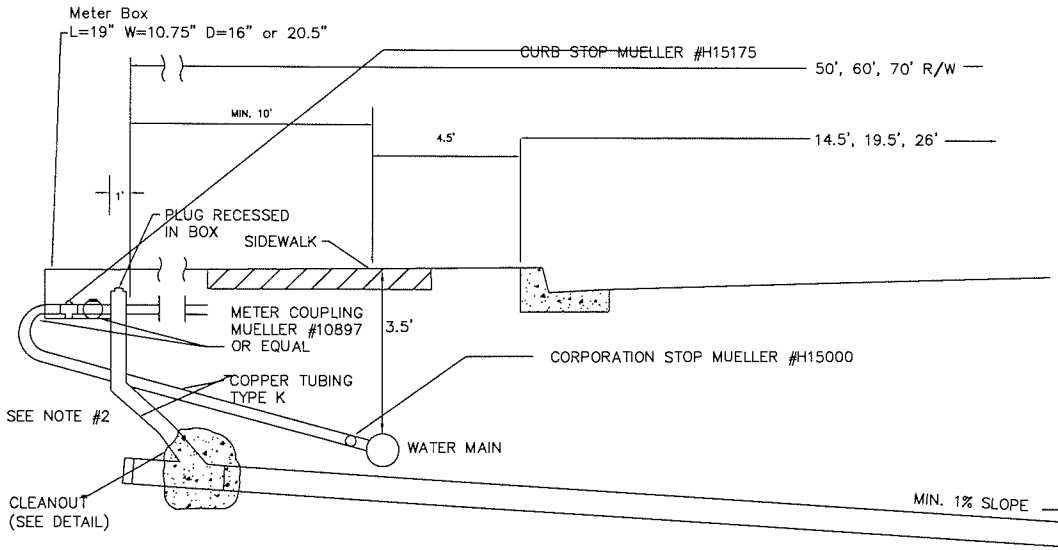

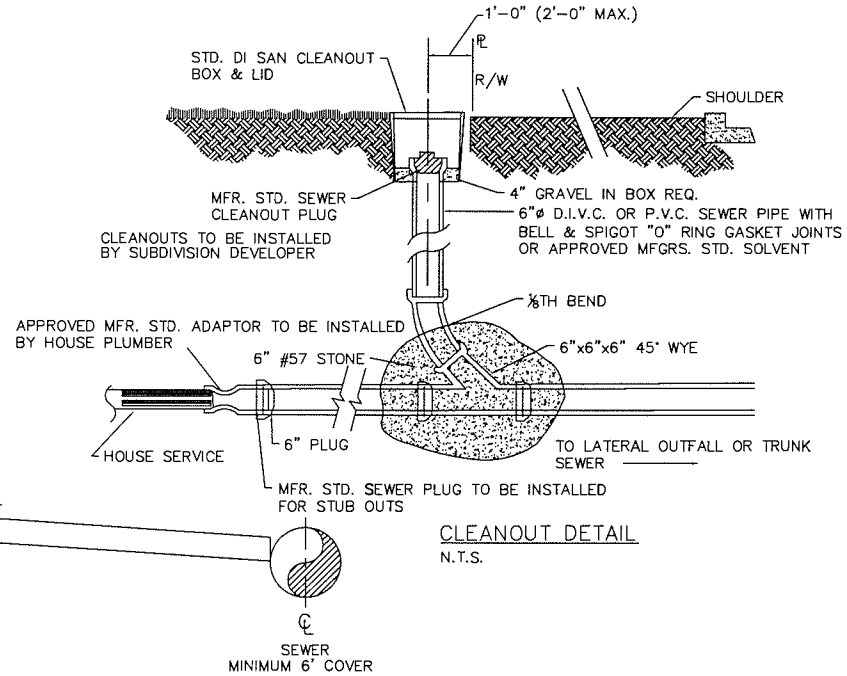

CLEANOUT DETAIL
N.T.S.

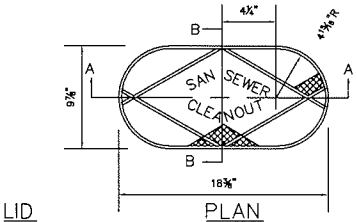

LID

PLAN
N.T.S.

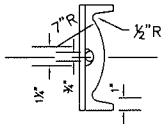

SECTION B–B
N.T.S.

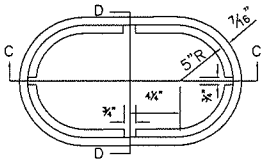

PLAN VIEW
N.T.S.

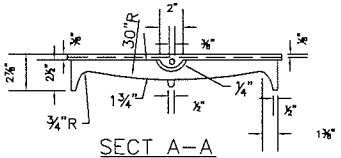

SECT A–A
N.T.S.

NOTES
1. CAST IRON SHALL CONFORM TO A.S.T.M. SPEC A48 LATEST REV. FOR CLASS 20 GREY IRON CASTINGS.
2. IF THE RISER IS GREATER THAN 6'–0" THE JOINT WILL BE ENCASED IN 6" OF 1:3.5 CONCRETE.

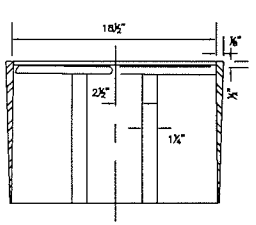

SECTION C–C
CLEANOUT BOX
N.T.S.

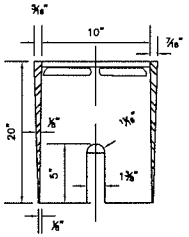

SECT D–D
N.T.S.

FULTON COUNTY STANDARD DETAIL 711
SEWER LATERAL INSTALLATION
DETAILS FOR CURBED STREETS

DATE	REVISIONS	DATE	REVISIONS

DGS/DRN/CHKD: REB
APPROVED: REW
DATE: 12–2–05

FULTON COUNTY

FULTON COUNTY PUBLIC WORKS
141 PRYOR ST. ATLANTA, GA. 30303
404–730–7400 FAX: 404–224–0498

DRAWING NO.
711

INDEX

DWG NO.	DESCRIPTION
800	INDEX AND GENERAL NOTES
801	5/8" METER INSTALLATION
802	1" METER INSTALLATION
803	1 1/2" METER INSTALLATION
804	2" METER INSTALLATION
805	LARGE METERS AND VAULT
806	3/4" – 1" METER SETTING SHORT AND LONG SIDES
807	REDUCED PRESSURE PRINCIPLE BACKFLOW-PREVENTION ASSEMBLY
808	REDUCED PRESSURE PRINCIPLE BACKFLOW-PREVENTION ASSEMBLY
809	DOUBLE CHECK VALVE ASSEMBLY
810	DOUBLE CHECK VALVE ASSEMBLY
811	PRESSURE VACUUM BREAKER ASSEMBLY
812	ATMOSPHERIC VACUUM BREAKER ASSEMBLY
813	WATER METER INSTALLATION & 3/4" COPPER SERVICE WATER VALVE MARKERS
814	HYDRANT LOCATION DETAIL FOR CURB & GUTTER STREETS
815	FIRE HYDRANT STREET UNCURBED
816	FIRE HYDRANT INSTALLATION DETAILS
817	A & V RELEASE VALVE ASSEMBLY 1" OR 2"
818	TYPICAL ANCHORS
819	UNDERGROUND VALVE BOX
820	WATER MAIN TERMINATION
821	WATER VALVE MARKER
822	FIRE LINE VAULT-TYPE I
823	RESTRAINED JOINT PIPE STANDARD LENGTHS
824	WATER SVS. TOWNHOME/APT./CONDOMINIUM PRIVATE DEVELOPMENT
825	FM ASSEMBLY

GENERAL NOTES

FULTON COUNTY STANDARD DETAIL
INDEX AND GENERAL NOTES

DATE	REVISIONS	DATE	REVISIONS

DGS/DRN/CHKD: CMS
APPROVED: REW
DATE: 12-02-05

FULTON COUNTY

FULTON COUNTY PUBLIC WORKS
141 PRYOR ST. ATLANTA, GA. 30303
404-730-7400 FAX: 404-730-6325

DRAWING NO.
INDEX
800

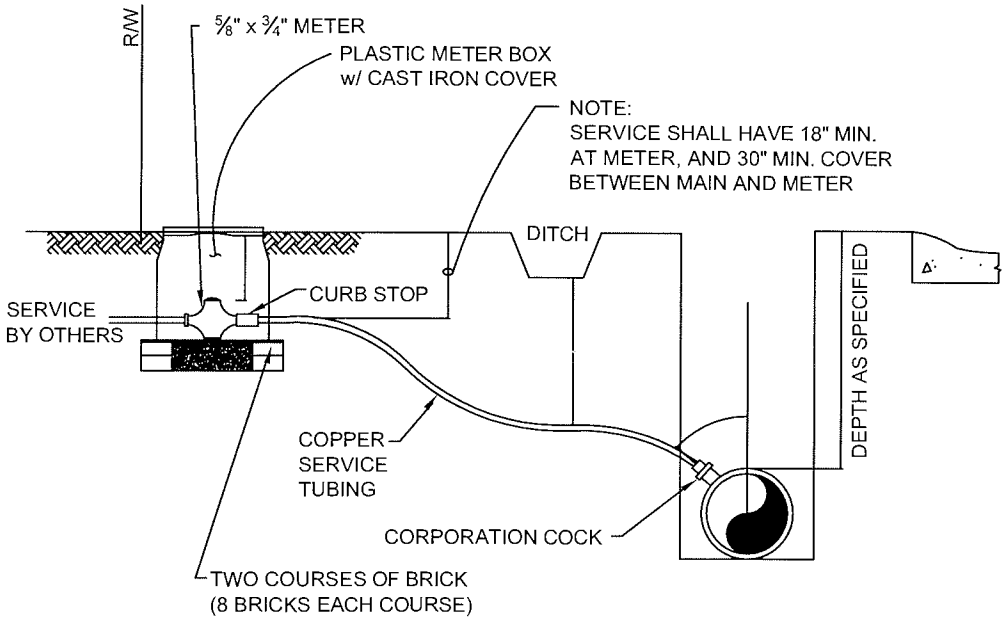

NOTES:

1. SERVICE LINE SHALL BE 3/4" DIAMETER FROM MAIN TO METER
2. USE ALL FLARE JOINTS
3. INSTALLATION SHALL ALLOW ADEQUATE ROOM TO REMOVE AND/OR REPAIR METER.
4. METER BOX SHALL BE APPROXIMATELY 12" x 18".

FULTON COUNTY STANDARD DETAIL 801 5/8" METER INSTALLATION		DATE	REVISIONS	DATE	REVISIONS	DGS/DRN/CHKD: CMS APPROVED: REW DATE: 12-2-05	FULTON COUNTY	FULTON COUNTY PUBLIC WORKS 141 PRYOR ST. ATLANTA, GA. 30303 404-730-7400 FAX: 404-224-0498	DRAWING NO. 801

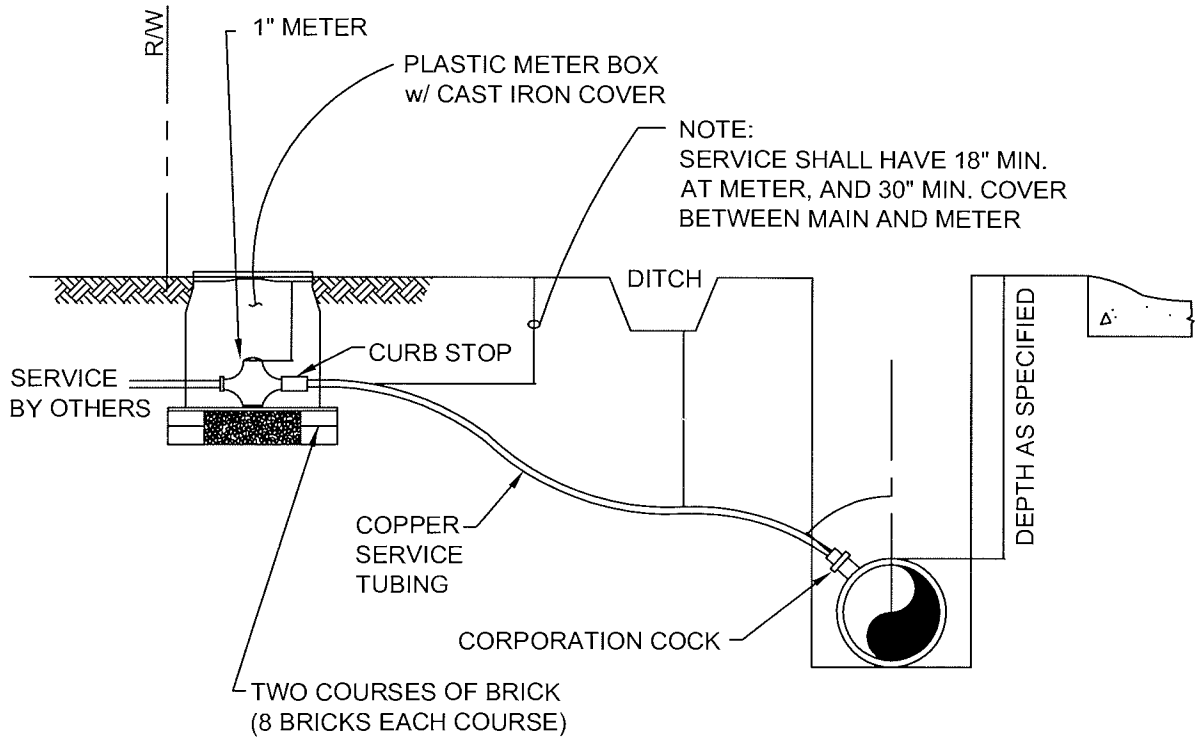

NOTES:

1.SERVICE LINE SHALL BE 1" FROM MAIN TO METER.

2. USE ALL FLARE JOINTS.

3. INSTALLATION SHALL ALLOW ADEQUATE ROOM TO REMOVE AND/OR REPAIR METER.

4. METER BOX SHALL BE APPROXIMATELY 18" x 24".

FULTON COUNTY STANDARD DETAIL 802 1" METER INSTALLATION		DATE	REVISIONS	DATE	REVISIONS	DGS/DRN/CHKD: CMS APPROVED: REW DATE: 12-2-05	FULTON COUNTY	FULTON COUNTY PUBLIC WORKS 141 PRYOR ST. ATLANTA, GA. 30303 404-730-7400 FAX: 404-224-0498	DRAWING NO. 802

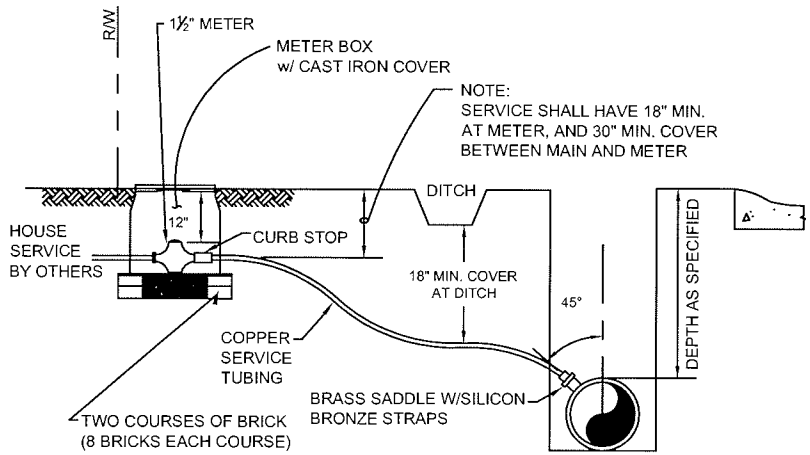

NOTES:

1.SERVICE LINE SHALL BE 1 1/2" FROM THE MAIN TO THE METER.

2. USE ALL COMPRESSION GRIP JOINT.

3. INSTALLATION SHALL ALLOW ADEQUATE ROOM TO REMOVE AND/OR REPAIR METER.

4. METER BOX SHALL BE APPROXIMATELY 24" x 36".

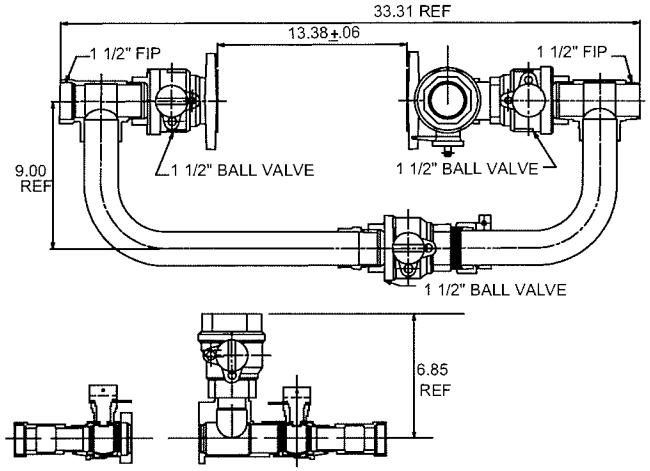

FULTON COUNTY STANDARD DETAIL 803 1 ½" METER INSTALLATION		DATE	REVISIONS	DATE	REVISIONS	DGS/DRN/CHKD: CMS APPROVED: REW DATE: 12-2-05	FULTON COUNTY	FULTON COUNTY PUBLIC WORKS 141 PRYOR ST. ATLANTA, GA. 30303 404-730-7400 FAX: 404-224-0498	DRAWING NO. 803

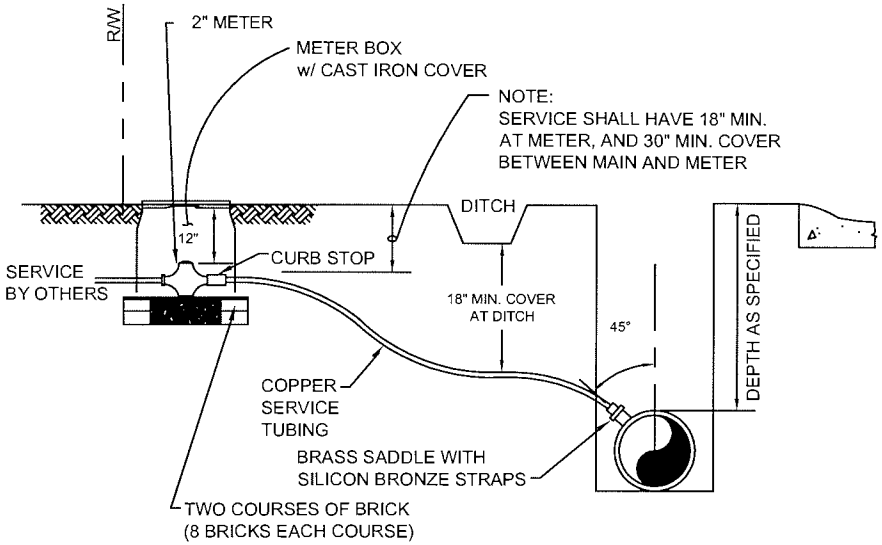

NOTES:

1. SERVICE LINE SHALL BE 2" DIAMETER FROM THE MAIN TO THE METER
2. USE ALL COMPRESSION GRIP JOINTS.
3. INSTALLATION SHALL ALLOW ADEQUATE ROOM TO REMOVE AND/OR REPAIR METER.
4. METER BOX SHALL BE APPROXIMATELY 24" x 36".

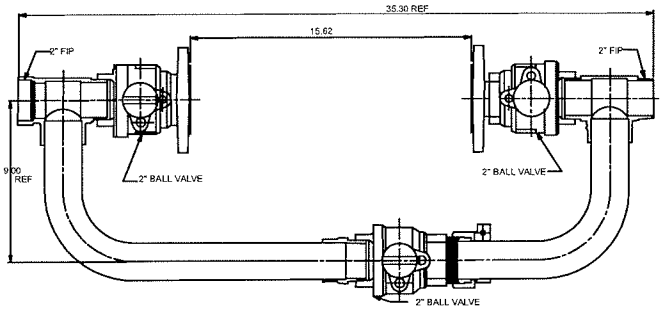

		DATE	REVISIONS	DATE	REVISIONS				DRAWING NO.
FULTON COUNTY STANDARD DETAIL 804 2" METER INSTALLATION						DGS/DRN/CHKD: CMS APPROVED: REW DATE: 12-2-05	FULTON COUNTY	FULTON COUNTY PUBLIC WORKS 141 PRYOR ST. ATLANTA, GA. 30303 404-730-7400 FAX: 404-224-0498	804

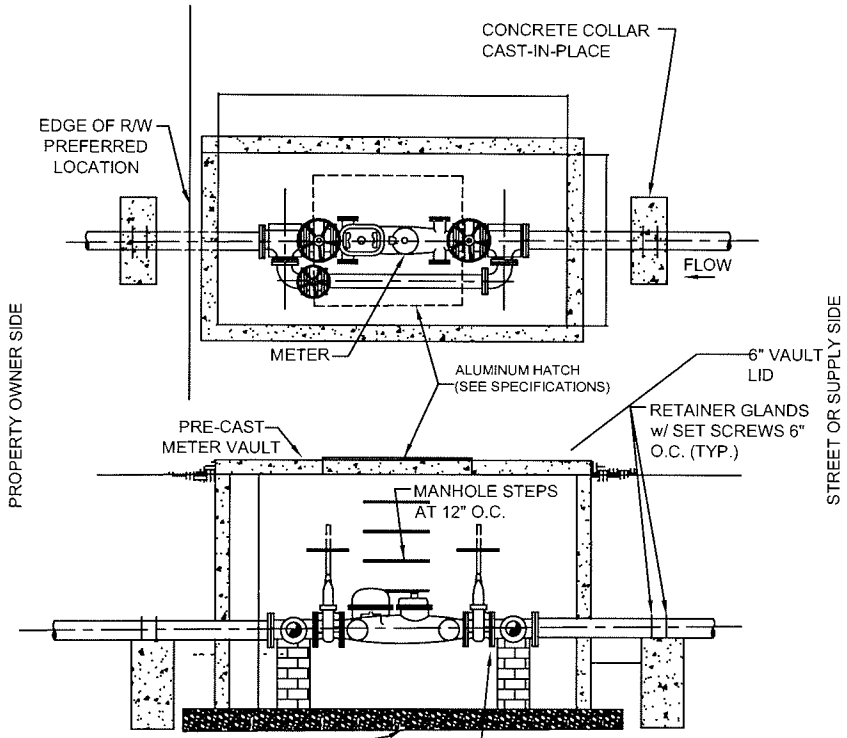

NOTES:

1. BOXES EXCEEDING 5' IN DEPTH MUST BE APPROVED BY FULTON COUNTY.
2. WHEN METER BOX CANNOT BE LOCATED ENTIRELY ON R/W, A PERMENANT EASEMENT SHALL BE OBTAINED TO PREVENT FENCES OR OTHER OBSTRUCTIONS FROM BEING ERECTED AROUND THE METER BOX.
3. COVER OPENING & STEPS TO BE PLACED NEAREST THE METER REGISTER.
4. THE METER MUST BE INSTALLED WITH AT LEAST 8 DIAMETERS OF STRAIGHT PIPE SAME SIZE AS METER ON THE INLET SIDE TO PERMIT ON-SITE MAINTENANCE AND CALIBRATION. A STRAINER MAY BE PROVIDED IN LIEU OF THE STRAIGHT PIPE IN ACCORDANCE WITH THE METER MANUFACTURER'S RECOMMENDATIONS. AN INLET AND OUTLET GATE VALVE WITH BYPASS LINE ARE REQUIRED (SEE ILLUSTRATION).
5. THESE BOXES ARE NOT TO BE INSTALLED IN TRAFFIC AREAS WITHOUT PRIOR PERMISSION FROM FULTON COUNTY.
6. ALL VALVES AND FITTINGS INSIDE THE VAULT SHALL BE FLANGED.
7. ALL FITTINGS OUTSIDE THE VAULT SHALL BE PUSH-ON JOINT WITH AMERICAN 'FAST-GRIP' GASKETS OR APPROVED EQUAL.
8. ALL METERS SHALL COME EQUIPPED WITH A TOUCHREAD OR TOUCHLESS SENSOR COMPATIBLE WITH FULTON COUNTY'S METER READING EQUIPMENT.
9. THIS DETAIL ALSO AUTHORIZED FOR INSTALLATION OF 3" AND LARGER RE-USE METERS.
10. HATCH SHALL BE 4' X 6', DOUBLE LEAF, FLUSH MOUNT, 1/4" DIAMOND PLATE, ALUMINUM DOORS LOCKABLE WITH A 5/8" ROD. HATCH SHALL BE BILCO # PDCM-3 OR PRE-APPROVED EQUAL FOR 6" & 8" METERS.. HATCH SHALL BE 3'6" X 3'6" SINGLE LEAF FLUSH MOUNT 1/4" DIAMOND PLATE, ALUMINUM DOOR LOCKABLE WITH 5/8" ROD. HATCH SHALL BE B.LCO#PCM - 5 OR PRE-APPROVED EQUAL FOR 3" & 4" METERS.

METER SIZE	VAULT			HATCH SIZE
	L	W	D	
3"	9'	5'	6'	3'6" X 3'6"
4"	9'	5'	6'	3'6" X 3'6"
6"	12'	6'	6'	4' X 6'
8"	12'	6'	6'	4' X 6'

FULTON COUNTY STANDARD DETAIL 805
LARGE METERS AND VAULT

DATE	REVISIONS	DATE	REVISIONS

DGS/DRN/CHKD: CMS
APPROVED: REW
DATE: 12-2-05

FULTON COUNTY

FULTON COUNTY PUBLIC WORKS
141 PRYOR ST. ATLANTA, GA. 30303
404-730-7400 FAX: 404-224-0498

DRAWING NO.
805

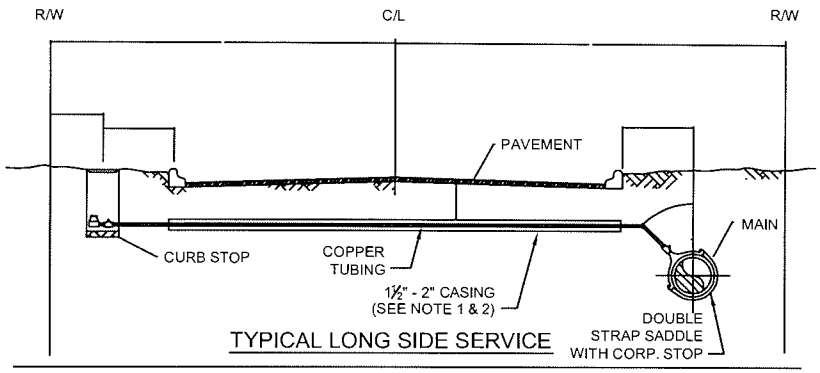

TYPICAL LONG SIDE SERVICE

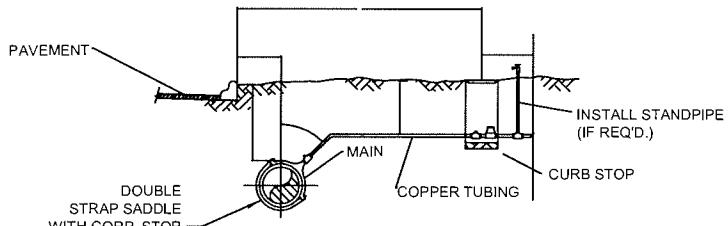

TYPICAL SHORT SIDE SERVICE

NOTES

1. IN THE EVENT CASING IS NOT PRESENT ON LONG SIDE LOT, BORING SHALL BE PERMITTED. WHEN CASING DOES EXIST - 1" OR ¾" PIPE SHALL BE INSERTED THROUGH CASING TO COMPLETE THE INSTALLATION FROM THE MAIN TO THE METER.

2. APPROVAL MUST BE OBTAINED BY FULTON COUNTY DEPARTMENT OF PUBLIC WORKS TRANSPORTATION DIVISION. PRIOR TO ROAD CUT, THE PUBLIC WORKS WATER SERVICES DIVISION DOES NOT HAVE THE AUTHORITY TO APPROVE ROAD CUTS, NO ROAD CUT SHALL BE PERMITTED UNTIL 3 ATTEMPTS HAVE BEEN MADE AT BORING OR LOCATING CASING.

3. 24" COVER (MIN.) FROM SURFACE TO TOP OF SERVICE PIPE APPLIES TO COUNTY MAINTAINED ROADS FOR STATE ROADS SAID MINIMUM CLEARANCE SHALL BE 48".

4. ALL CUTS IN PAVEMENT SHALL BE REPAIRED IN ACCORDANCE WITH EITHER GA. D.O.T. OR FULTON CO. STANDARDS. CONTRACTOR SHALL BE RESPONSIBLE FOR PROPER DITCH COMPACTION, CUT BACK OF DITCH SIDES AND PAVING OF THE REQUIRED CONCRETE SUB-BASE AND PLATING THE DITCH TO ALLOW TRAFFIC FLOW WHILE CONCRETE IS SETTING UP. STEEL TRAFFIC PLATES WILL COVER POURED CONCRETE FOR A MINIMUM OF 24 HOURS.

5. METERS ARE TO BE SET DIRECTLY OPPOSITE TAP ON MAIN. THE METER SHALL NOT BE OFFSET LATERALLY FROM TAP ON WATER MAIN.

FULTON COUNTY STANDARD DETAIL 806 ¾" – 1" METER SETTING SHORT AND LONG SIDES		DATE	REVISIONS	DATE	REVISIONS	DGS/DRN/CHKD: CMS APPROVED: ML DATE: 12-2-05	FULTON COUNTY	FULTON COUNTY PUBLIC WORKS 141 PRYOR ST. ATLANTA, GA. 30303 404-730-7400 FAX: 404-224-0498	DRAWING NO. 806

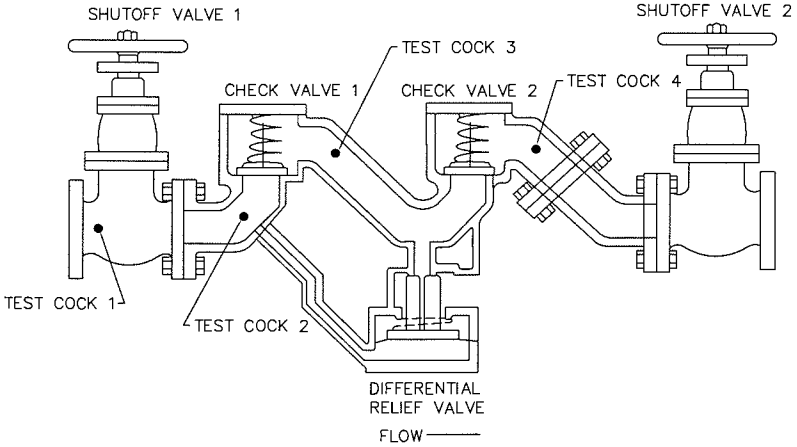

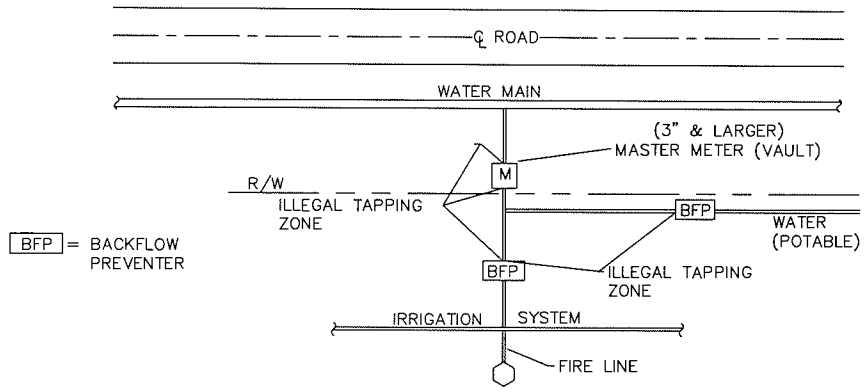

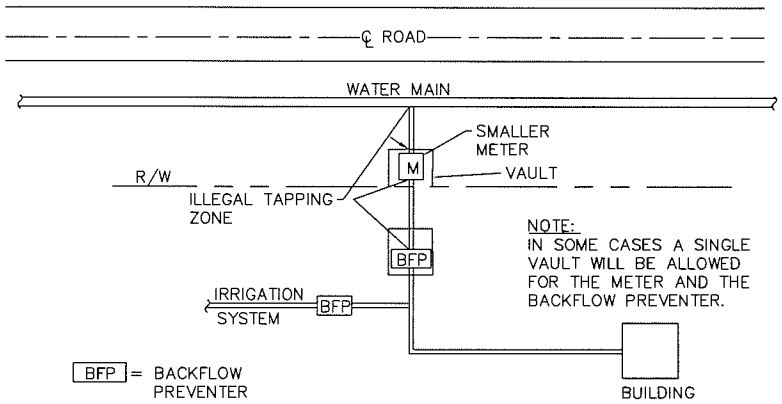

NOTE:
IN SOME CASES A SINGLE VAULT WILL BE ALLOWED FOR THE METER AND THE BACKFLOW PREVENTER.

NOTE:
THE AIR-GAP OR MECHANICAL BACKFLOW PREVENTION ASSEMBLY SHALL BE INSTALLED SUBJECT TO THE APPROVAL OF FULTON COUNTY PUBLIC WORKS. ANY DEVIATION FROM THE METHODS DESCRIBED ABOVE MUST RECEIVE APPROVAL PRIOR TO INSTALLATION. ALL MECHANICAL BACKFLOW PREVENTION ASSEMBLIES APPROVED BY FULTON COUNTY PUBLIC WORKS FOR INSTALLATION AT THE SERVICE CONNECTION MUST BE APPROVED BY THE FOUNDATION FOR CROSS-CONNECTION CONTROL AND HYDRAULIC RESEARCH, UNIVERSITY OF SOUTHERN CALIFORNIA. THESE ASSEMBLIES ARE ONLY APPROVED FOR THE HORIZONTAL ORIENTATIONS. CHOICE OF THE TYPE OF BACKFLOW PREVENTION ASSEMBLY, I.E. REDUCED PRESSURE PRINCIPLE OR DOUBLE CHECK VALVE ASSEMBLY, WILL BE BASED ON THE DEGREE OF HAZARD AS EVALUATED BY FULTON COUNTY PUBLIC WORKS.

FOR FURTHER INFORMATION REFER TO THE FULTON COUNTY MANUAL ON CROSS CONNECTIONS.

FULTON COUNTY STANDARD DETAIL 807
REDUCED PRESSURE PRINCIPLE
BACKFLOW-PREVENTION ASSEMBLY

DATE	REVISIONS	DATE	REVISIONS

DGS/DRN/CHKD: REB
APPROVED: REW
DATE: 12-2-05

FULTON COUNTY

FULTON COUNTY PUBLIC WORKS
141 PRYOR ST. ATLANTA, GA. 30303
404-730-7400 FAX: 404-224-0498

DRAWING NO.
807

REDUCED – PRESSURE PRINCIPLE BACKFLOW PREVENTION ASSEMBLY (RPBA)

DESCRIPTION

THE APPROVED REDUCED–PRESSURE PRINCIPLE BACKFLOW–PREVENTION ASSEMBLY CONSISTS OF TWO INDEPENDENTLY ACTING, APPROVED CHECK VALVES TOGETHER WITH A HYDRAULICALLY OPERATING, MECHANICALLY INDEPENDENT PRESSURE DIFFERENTIAL RELIEF VALVE LOCATED BETWEEN THE CHECK VALVES AND BELOW THE FIRST CHECK VALVE. THESE UNITS ARE LOCATED BETWEEN TWO TIGHTLY CLOSING RESILIENT–SEATED SHUTOFF VALVES, AS AN ASSEMBLY, AND ARE EQUIPPED WITH PROPERLY LOCATED RESILIENT–SEATED TEST COCKS AS SHOWN.

APPLICATION

THE RPBA IS EFFECTIVE AGAINST BACKFLOW CAUSED BY BACKPRESSURE AND BACKSIPHONAGE.
THE RPBA IS NORMALLY USED IN LOCATIONS WHERE AN APPROVED AIR GAP IS IMPRACTICAL.

INSTALLATION

THE RPBA SHALL BE INSTALLED WITH ADEQUATE SPACE TO FACILITATE MAINTENANCE AND TESTING. THE INSTALLATION SHOULD NOT REQUIRE PLATFORMS, LADDERS, OR LIFTS FOR ACCESS.
ADEQUATE CLEARANCE FROM THE FLOOR, CEILING, AND WALLS MUST BE PROVIDED TO FACILITATE THE REMOVAL OF THE RELIEF VALVE AND/OR CHECK VALVES.

AN RPBA MUST BE PROTECTED FROM FREEZING TEMPERATURES AND IF INSTALLED WHERE TEMPERATURES WILL REACH 110 DEGREES FAHRENHEIT (43 DEGREES CELSIUS) OR ABOVE, THE HOT–WATER TYPE OF ASSEMBLY MUST BE USED.
CONSULT MANUFACTURER'S SPECIFICATIONS FOR RECOMMENDATIONS.
AN RPBA SHALL NOT BE INSTALLED IN A PIT BELOW GROUND LEVEL. SEMIBURIED PITS ARE ACCEPTABLE IF THE RPBA IS INSTALLED ABOVE THE GROUND OR THE MAXIMUM FLOOD LEVEL WITH THE APPROVED AIR GAP BETWEEN THE RELIEF VALVE PORT AND THE DAYLIGHT DRAIN.
THE DAYLIGHT DRAIN FROM ABOVE GROUND OR SEMIBURIED VAULTS MUST PROVIDE:
ADEQUATE DRAINAGE FOR THE DISCHARGE FROM THE REDUCED–PRESSURE PRINCIPLE ASSEMBLY RELIEF VALVE PORT.
ACCESS FOR MAINTENANCE AND PERIODIC TESTING MUST ALSO BE PREPARED.

BEFORE INSTALLING AN RPBA, ENSURE THAT THE RELIEF VALVES ARE IN GOOD WORKING CONDITION.
IF THE RPBA IS LOCATED INSIDE A BUILDING, A DRAIN MUST BE PROVIDED TO RECEIVE SPILLAGE FROM THE RELIEF VALVE PORT. THE RELIEF VALVE PORT MUST ALWAYS HAVE AN APPROVED AIR GAP BETWEEN IT AND THE DRAIN OR MAXIMUM FLOOD LEVEL, WHICHEVER IS HIGHEST.
ALL REDUCED–PRESSURE PRINCIPLE ASSEMBLIES SHALL BE INSTALLED IN THE

THE RPBA SHALL NOT BE INSTALLED IN AN AREA WHERE CORROSIVE FUMES OR GASES COULD RENDER THE ASSEMBLY INOPERABLE.

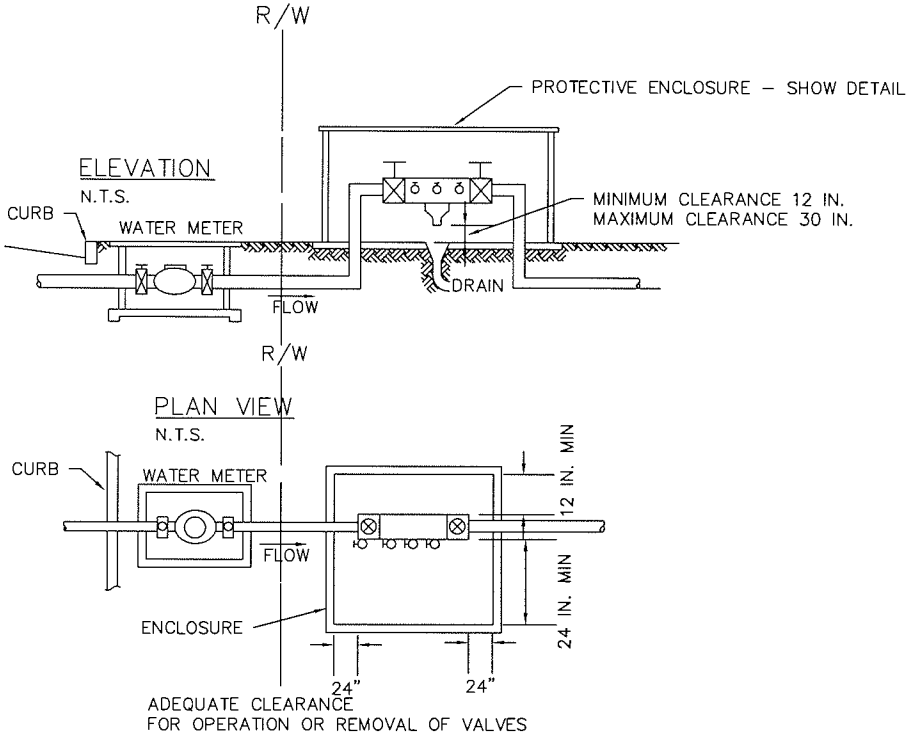

FULTON COUNTY STANDARD DETAIL 808 REDUCED PRESSURE PRINCIPLE BACKFLOW–PREVENTION ASSEMBLY		DATE	REVISIONS	DATE	REVISIONS	DGS/DRN/CHKD: REB APPROVED: REW DATE: 12–2–05	FULTON COUNTY	FULTON COUNTY PUBLIC WORKS 141 PRYOR ST. ATLANTA, GA. 30303 404–730–7400 FAX: 404–224–0498	DRAWING NO. 808

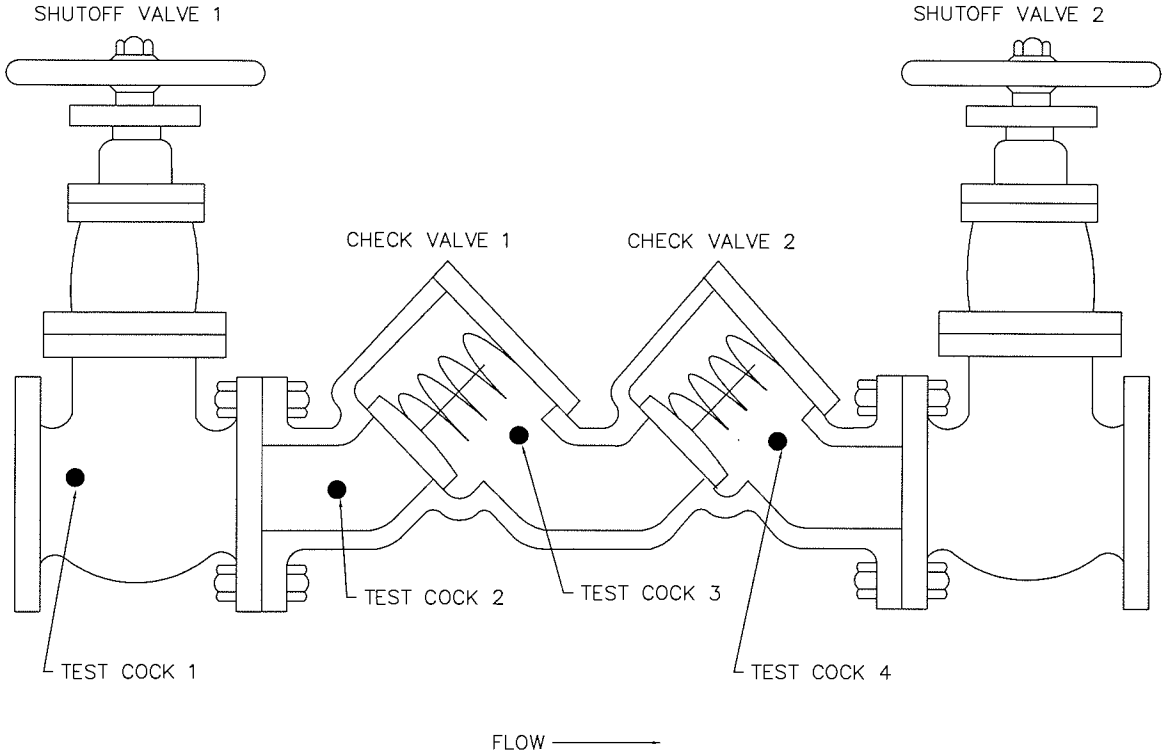

NOTE: THE AIR-GAP OR MECHANICAL BACKFLOW PREVENTION ASSEMBLY SHALL BE INSTALLED SUBJECT TO THE APPROVAL OF FULTON COUNTY PUBLIC WORKS. ANY DEVIATION FROM THE METHODS DESCRIBED ABOVE MUST RECEIVE APPROVAL PRIOR TO INSTALLATION. ALL MECHANICAL BACKFLOW PREVENTION ASSEMBLIES APPROVED BY FULTON COUNTY PUBLIC WORKS FOR INSTALLATION AT THE SERVICE CONNECTION MUST BE APPROVED BY THE FOUNDATION FOR CROSS-CONNECTION CONTROL AND HYDRAULIC RESEARCH, UNIVERSITY OF SOUTHERN CALIFORNIA. THESE ASSEMBLIES ARE ONLY APPROVED FOR THE HORIZONTAL ORIENTATIONS. CHOICE OF THE TYPE OF BACKFLOW PREVENTION ASSEMBLY, I.E. REDUCED PRESSURE PRINCIPLE OR DOUBLE CHECK VALVE ASSEMBLY, WILL BE BASED ON THE DEGREE OF HAZARD AS EVALUATED BY FULTON COUNTY PUBLIC WORKS.

FOR FURTHER INFORMATION REFER TO THE FULTON COUNTY MANUAL ON CROSS CONNECTIONS.

		DATE	REVISIONS	DATE	REVISIONS				
FULTON COUNTY STANDARD DETAIL 809 DOUBLE CHECK VALVE ASSEMBLY						DGS/DRN/CHKD: REB APPROVED: REW DATE: 12-2-05	FULTON COUNTY	FULTON COUNTY PUBLIC WORKS 141 PRYOR ST. ATLANTA, GA. 30303 404-730-7400 FAX: 404-224-0498	DRAWING NO. 809

DOUBLE CHECK VALVE ASSEMBLE (DCVA)

DESCRIPTION

THIS ASSEMBLY CONSISTS OF TWO INTERNALLY LOADED CHECK VALVES, EITHER SPRING-LOADED OR INTERNALLY WEIGHTED, INSTALLED AS A UNIT BETWEEN TWO TIGHTLY CLOSING RESILIENT-SEATED SHUTOFF VALVES AS AN ASSEMBLY, AND FITTINGS WITH PROPERLY LOCATED RESILIENT-SEATED TEST COCKS AS SHOWN.

APPLICATION

THE DCVA IS EFFECTIVE AGAINST BACKFLOW CAUSED BY BACKPRESSURE AND BACKSIPHONAGE AND IS USED TO PROTECT THE WATER SYSTEM FROM POLLUTANTS THAT WOULD NOT CONSTITUTE AN ACTUAL HEALTH HAZARD, BUT THAT MIGHT BE OBJECTIONABLE TO THE WATER SUPPLY SYSTEM.

INSTALLATION

THE DCVA SHOULD BE INSTALLED WITH ADEQUATE SPACE TO FACILITATE MAINTENANCE AND TESTING AND SHOULD HAVE FREE ACCESS WITHOUT THE USE OF PLATFORMS, LADDERS, OR LIFTS.

A DCVA SHOULD NOT BE INSTALLED BELOW GROUND LEVEL UNLESS PROVIDED WITH ADEQUATE DRAINAGE TO MAINTAIN A DRY LOCATION. WHERE AN ASSEMBLY MUST BE INSTALLED IN A LOCATION THAT IS SUSCEPTIBLE TO FLOODING, SUCH AS A BASEMENT, THE TEST COCKS SHALL BE PLUGGED.

ALL DCVAS SHALL BE INSTALLED IN A HORIZONTAL POSITION UNLESS OTHERWISE RECOMMENDED BY THE MANUFACTURER AND/OR FULTON COUNTY PUBLIC WORKS.

A DCVA MUST BE PROTECTED FROM FREEZING TEMPERATURES. FOR TEMPERATURES OF 100 DEGREES FAHRENHEIT (43 DEGREES CELSIUS) OR ABOVE, CONSULT MANUFACTURER'S LITERATURE FOR RECOMMENDATIONS.

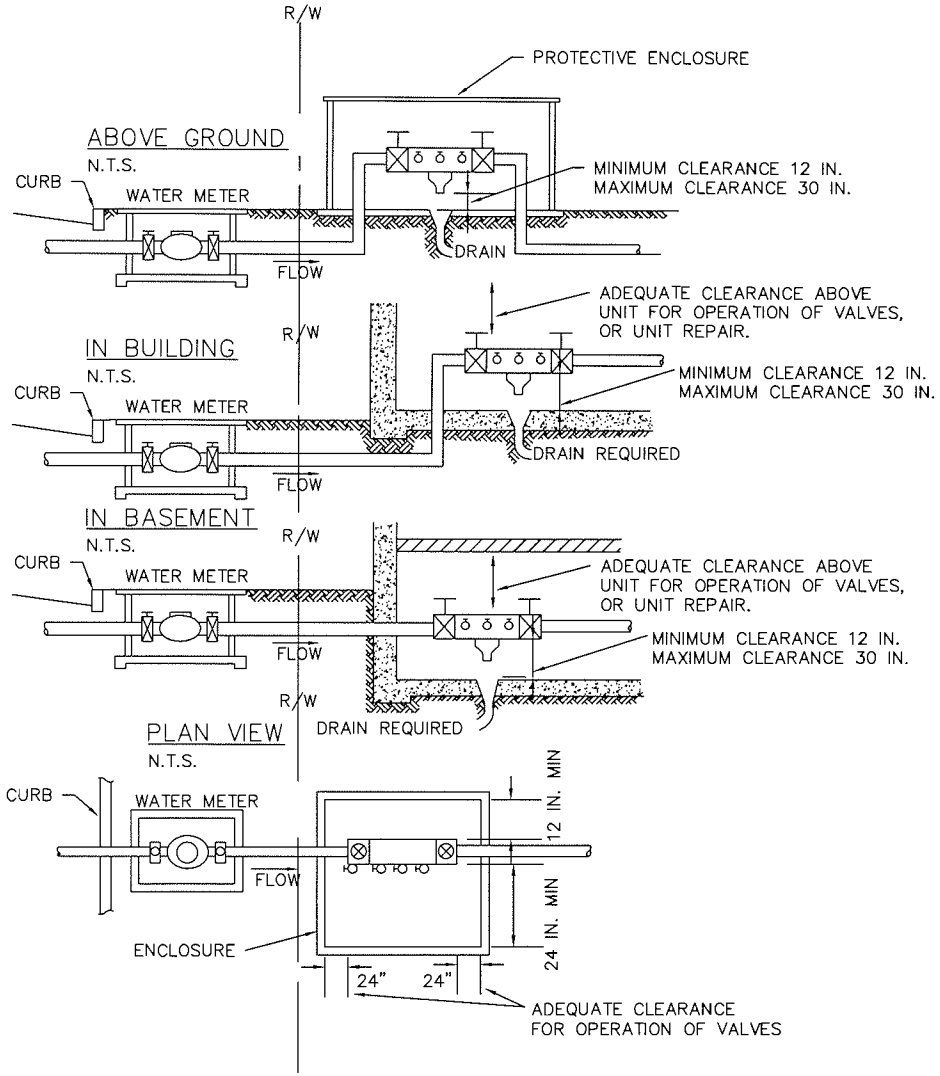

TYPICAL INSTALLATIONS WITH MINIMUM CLEARANCES
DOUBLE CHECK VALVE ASSEMBLIES

		DATE	REVISIONS	DATE	REVISIONS				DRAWING NO.
FULTON COUNTY STANDARD DETAIL 810 DOUBLE CHECK VALVE ASSEMBLY						DGS/DRN/CHKD: CMS APPROVED: REW DATE: 12-2-05	FULTON COUNTY	FULTON COUNTY PUBLIC WORKS 141 PRYOR ST. ATLANTA, GA. 30303 404-730-7400 FAX: 404-224-0498	810

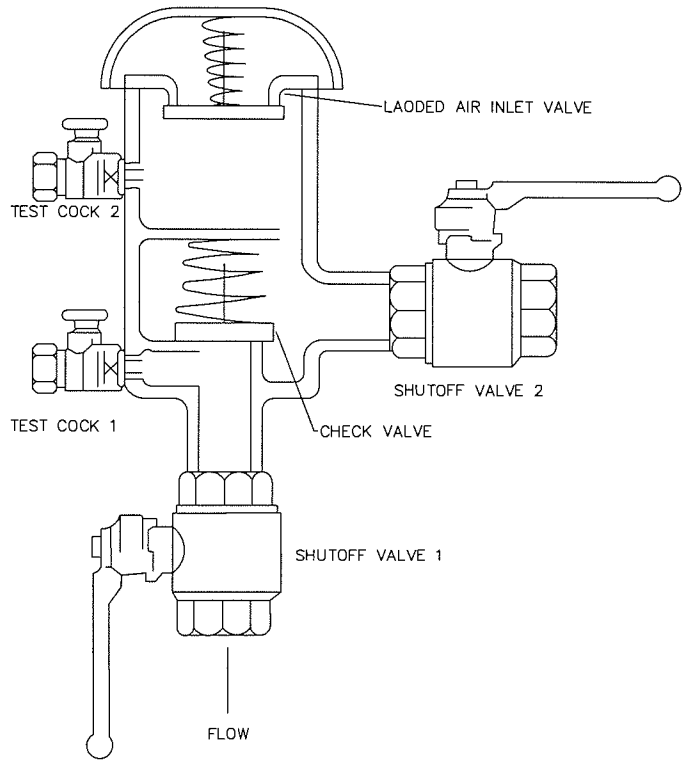

NOTE:

THE AIR-GAP OR MECHANICAL BACKFLOW PREVENTION ASSEMBLY SHALL BE INSTALLED SUBJECT TO THE APPROVAL OF FULTON COUNTY PUBLIC WORKS. ANY DEVIATION FROM THE METHODS DESCRIBED ABOVE MUST RECEIVE APPROVAL PRIOR TO INSTALLATION. ALL MECHANICAL BACKFLOW PREVENTION ASSEMBLIES APPROVED BY FULTON COUNTY PUBLIC WORKS FOR INSTALLATION AT THE SERVICE CONNECTION MUST BE APPROVED BY THE FOUNDATION FOR CROSS-CONNECTION CONTROL AND HYDRAULIC RESEARCH, UNIVERSITY OF SOUTHERN CALIFORNIA. THESE ASSEMBLIES ARE ONLY APPROVED FOR THE HORIZONTAL ORIENTATIONS. CHOICE OF THE TYPE OF BACKFLOW PREVENTION ASSEMBLY, I.E. REDUCED PRESSURE PRINCIPLE OR DOUBLE CHECK VALVE ASSEMBLY, WILL BE BASED ON THE DEGREE OF HAZARD AS EVALUATED BY FULTON COUNTY PUBLIC WORKS.

FOR FURTHER INFORMATION REFER TO THE FULTON COUNTY BACKFLOW PREVENTION PROGRAM.

		DATE	REVISIONS	DATE	REVISIONS				
FULTON COUNTY STANDARD DETAIL 811 PRESSURE VACUUM BREAKER ASSEMBLY						DGS/DRN/CHKD: REB APPROVED: REW DATE: 12-2-05	FULTON COUNTY	FULTON COUNTY PUBLIC WORKS 141 PRYOR ST. ATLANTA, GA. 30303 404-730-7400 FAX: 404-224-0498	DRAWING NO. 811

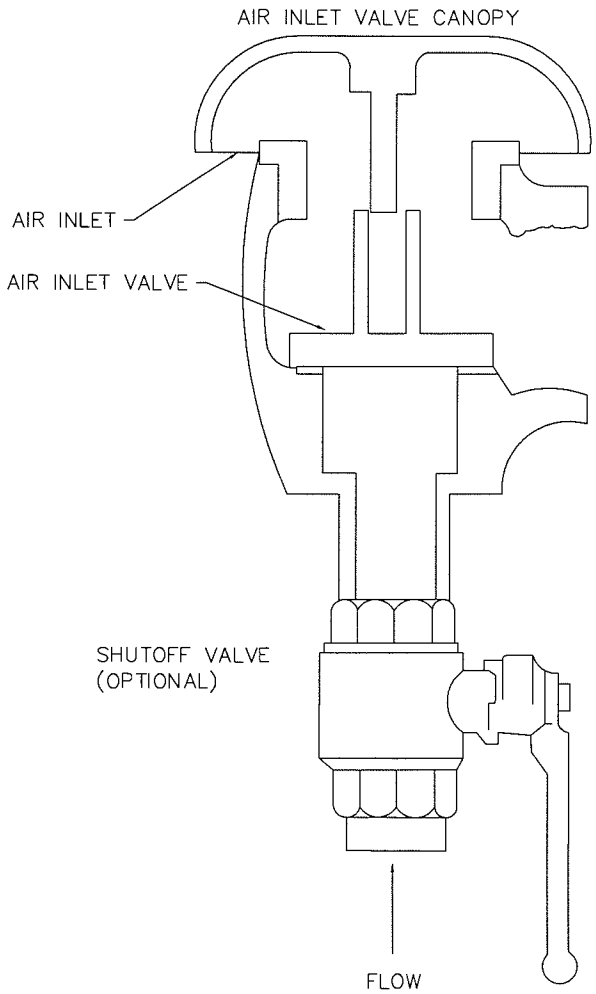

NOTE:

THE AIR-GAP OR MECHANICAL BACKFLOW PREVENTION ASSEMBLY SHALL BE INSTALLED SUBJECT TO THE APPROVAL OF FULTON COUNTY PUBLIC WORKS. ANY DEVIATION FROM THE METHODS DESCRIBED ABOVE MUST RECEIVE APPROVAL PRIOR TO INSTALLATION. ALL MECHANICAL BACKFLOW PREVENTION ASSEMBLIES APPROVED BY FULTON COUNTY PUBLIC WORKS FOR INSTALLATION AT THE SERVICE CONNECTION MUST BE APPROVED BY THE FOUNDATION FOR CROSS-CONNECTION CONTROL AND HYDRAULIC RESEARCH, UNIVERSITY OF SOUTHERN CALIFORNIA. THESE ASSEMBLIES ARE ONLY APPROVED FOR THE HORIZONTAL ORIENTATIONS. CHOICE OF THE TYPE OF BACKFLOW PREVENTION ASSEMBLY, I.E. REDUCED PRESSURE PRINCIPLE OR DOUBLE CHECK VALVE ASSEMBLY, WILL BE BASED ON THE DEGREE OF HAZARD AS EVALUATED BY FULTON COUNTY PUBLIC WORKS.

FOR FURTHER INFORMATION REFER TO THE FULTON COUNTY BACKFLOW PREVENTION PROGRAM.

FULTON COUNTY STANDARD DETAIL 812
ATMOSPHERIC VACUUM BREAKER ASSEMBLY

DATE	REVISIONS	DATE	REVISIONS

DGS/DRN/CHKD: REB
APPROVED: REW
DATE: 12-2-05

FULTON COUNTY

FULTON COUNTY PUBLIC WORKS
141 PRYOR ST. ATLANTA, GA. 30303
404-730-7400 FAX: 404-224-0498

DRAWING NO.
812

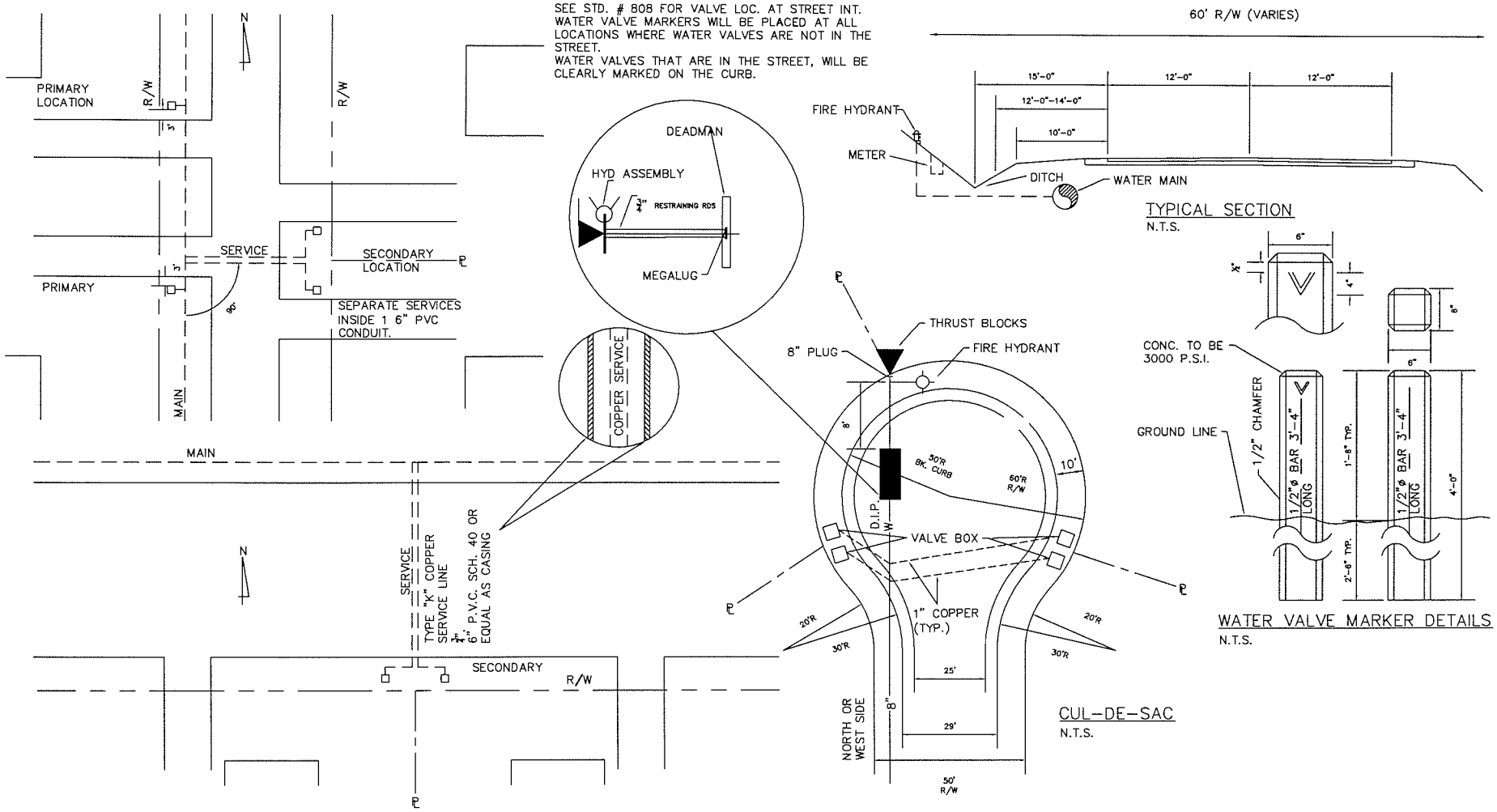

FULTON COUNTY STANDARD DETAIL 813 WATER METER INSTALLATION & ¾" COPPER SERVICE WATER VALVE MARKERS		DATE	REVISIONS	DATE	REVISIONS	DGS/DRN/CHKD: REB APPROVED: REW DATE: 12-2-05	FULTON COUNTY	FULTON COUNTY PUBLIC WORKS 141 PRYOR ST. ATLANTA, GA. 30303 404-730-7400 FAX: 404-224-0498	DRAWING NO. 813

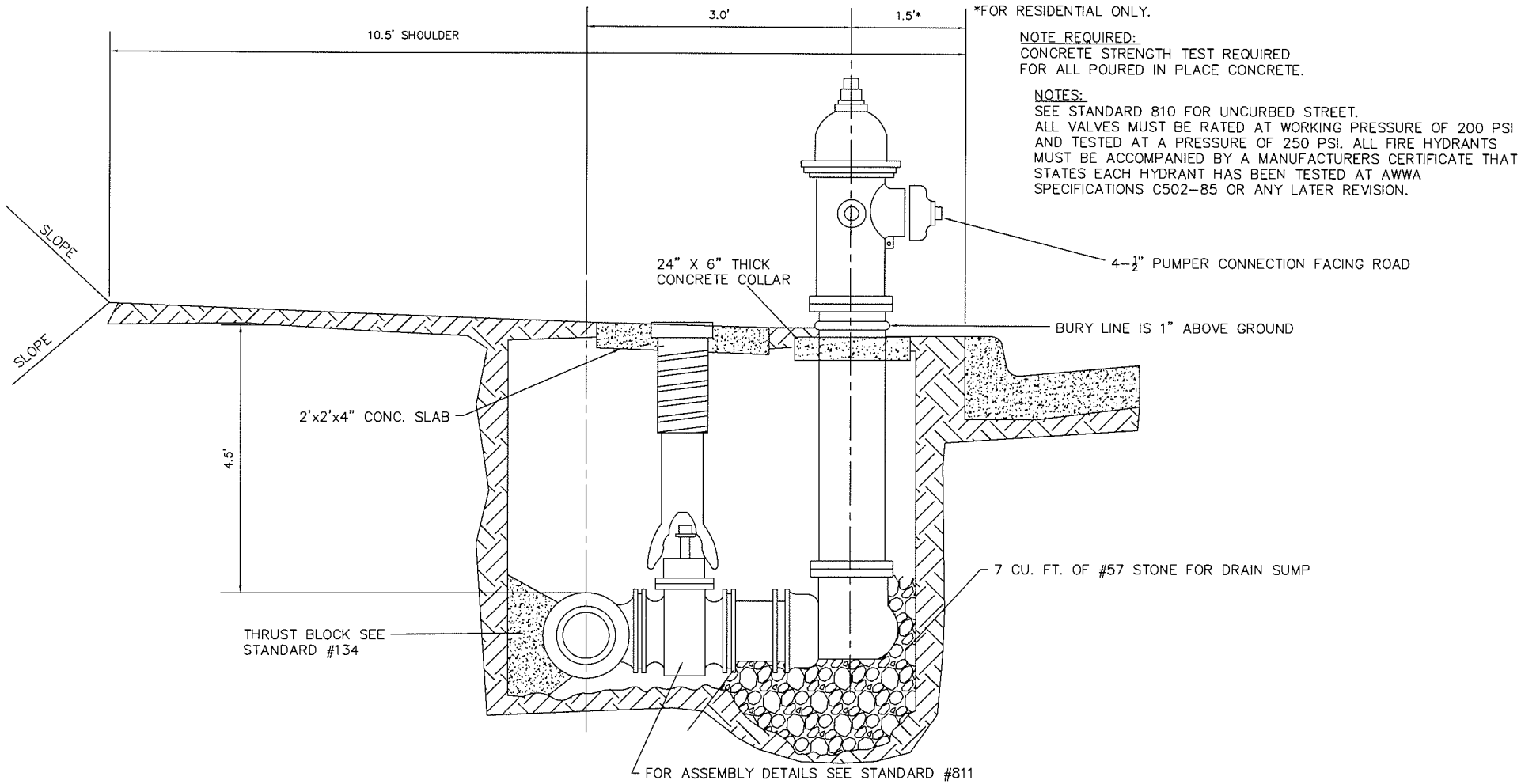

FULTON COUNTY STANDARD DETAIL 814
HYDRANT LOCATION DETAIL FOR
CURB & GUTTER STREETS

DATE	REVISIONS	DATE	REVISIONS

DGS/DRN/CHKD: REB
APPROVED: REW
DATE: 12-2-05

FULTON COUNTY

FULTON COUNTY PUBLIC WORKS
141 PRYOR ST. ATLANTA, GA. 30303
404-730-7400 FAX: 404-224-0498

DRAWING NO.
814

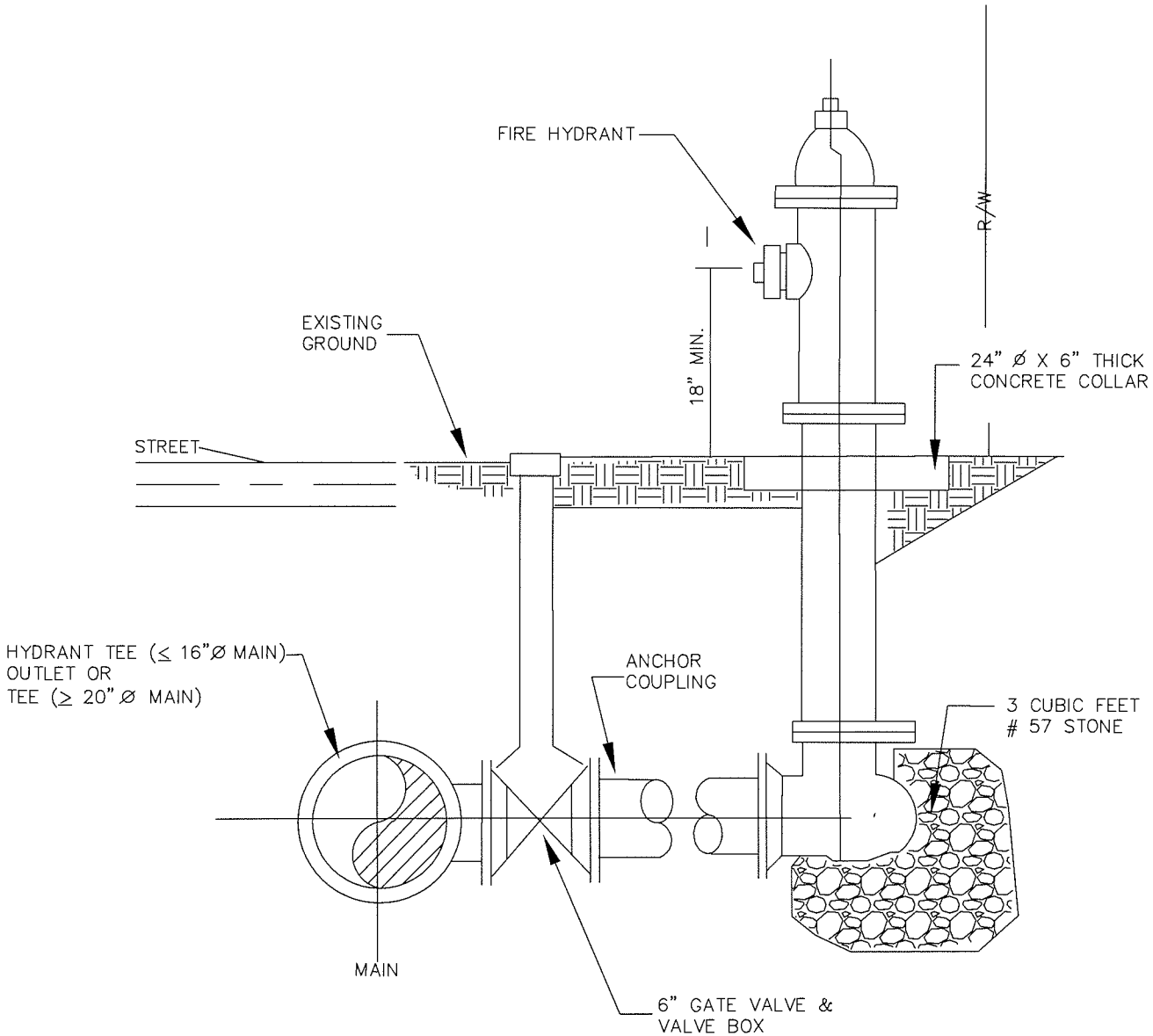

FULTON COUNTY STANDARD DETAIL 815
FIRE HYDRANT STREET UNCURBED

DATE	REVISIONS	DATE	REVISIONS

DGS/DRN/CHKD: REB
APPROVED: REW
DATE: 12-2-05

FULTON COUNTY

FULTON COUNTY PUBLIC WORKS
141 PRYOR ST. ATLANTA, GA. 30303
404-730-7400 FAX: 404-224-0498

DRAWING NO. 815

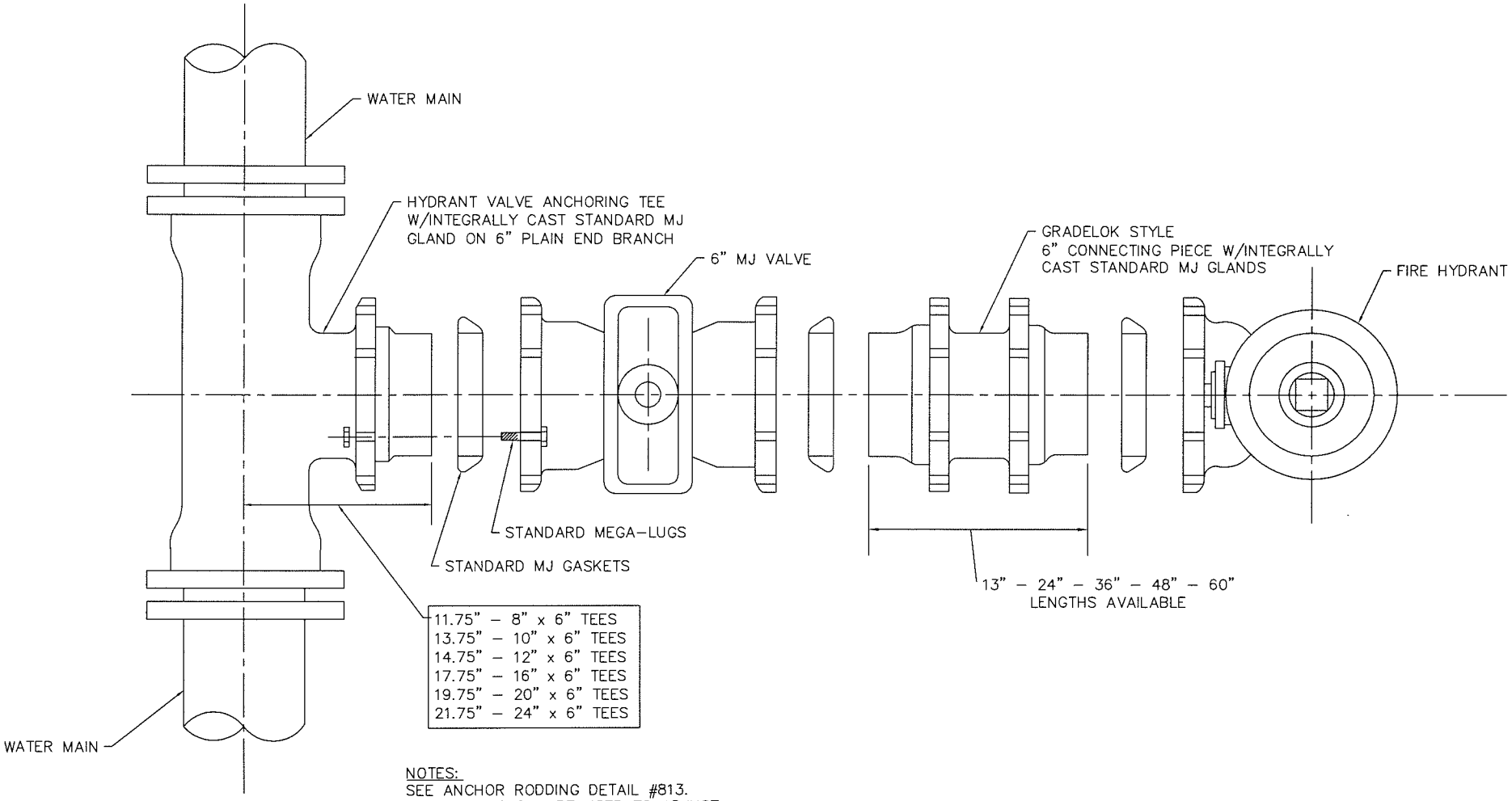

NOTES:
SEE ANCHOR RODDING DETAIL #813.
GRADE-LOCS CAN BE USED TO ADJUST HYDRANTS TO PROPER BURY DEPTH.

		DATE	REVISIONS	DATE	REVISIONS				DRAWING NO.
FULTON COUNTY STANDARD DETAIL 816 FIRE HYDRANT INSTALLATION DETAILS						DGS/DRN/CHKD: REB APPROVED: REW DATE: 12-2-05	FULTON COUNTY	FULTON COUNTY PUBLIC WORKS 141 PRYOR ST. ATLANTA, GA. 30303 404-730-7400 FAX: 404-224-0498	816

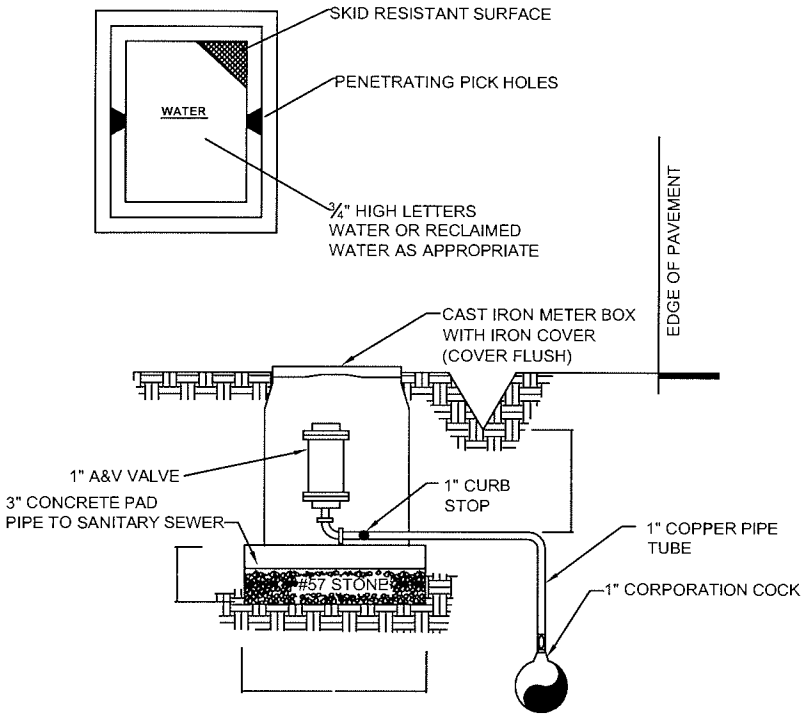

NOTES:

1. VALVE MARKER REQUIRED.
2. A&V VALVE AND COPPER SHALL BE SIZED IN ACCORDANCE WITH VALVE MANUFACTURER'S RECOMMENDATIONS.
3. METER BOX SHALL BE CDR 10 X 15HC OR APPROVED EQUAL
4. A & V VALVE SHALL BE VENT-O-MAT SERIES RBX OR EQUAL

FULTON COUNTY STANDARD DETAIL 817 A & V RELEASE VALVE ASSEMBLY 1" OR 2"		DATE	REVISIONS	DATE	REVISIONS	DGS/DRN/CHKD: CMS APPROVED: REW DATE: 12-2-05	FULTON COUNTY	FULTON COUNTY PUBLIC WORKS 141 PRYOR ST. ATLANTA, GA. 30303 404-730-7400 FAX: 404-224-0498	DRAWING NO. 817

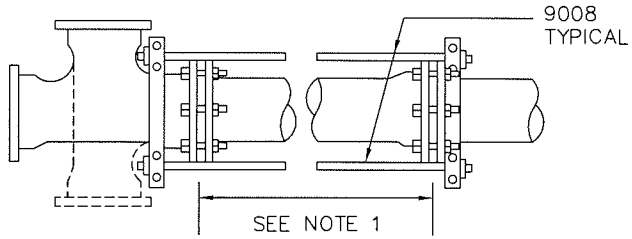

TEE ANCHOR
N.T.S.

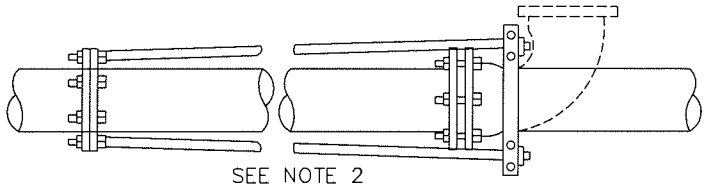

PIPE OR BEND ANCHOR TO FLANGE SPIGOT
N.T.S.

NOTES:

1. IN THE ASSEMBLIES OF RODS AND CLAMPS SHOWN, RODS RUN FROM A LUG ON THE FITTING (OR A CLAMP BEHIND THE HUB OF A BELL) TO A CLAMP AGAINST THE FACE OF A BELL. NOTE THAT THIS ARRANGEMENT ANCHORS ONLY ONE JOINT. THE STABILITY OF THE JOINT WHERE THE CLAMP IS AGAINST THE FACE OF THE BELL DEPENDS ON HAVING SOIL ABOVE A RELATIVELY LONG PIECE OF PIPE ON BOTH SIDES OF THE JOINT. CONSEQUENTLY, IF THE DISTANCE BETWEEN THE FIRST AND SECOND JOINT IS LESS THAN 12 FEET, THE SECOND JOINT SHOWN SHALL BE ANCHORED BY A CLAMP BEHIND THE HUB OF THE BELL AND RODS TO A CLAMP AT THE FACE OF THE NEXT BELL.

2. IN THE ASSEMBLIES SHOWN FOR RODS TO FLANGED FITTINGS, NOTE THAT THE FLANGED FITTING IS NOT TO BE BURIED IN SOIL.

3. AFTER INSTALLATION TIE RODS AND CLAMP ASSEMBLY SHALL BE THOROUGHLY COVERED WITH ROYSTON LABORATORIES INC. ROSKOTE MASTIC NO. A-938 OR KOPPERS CO INC. BITUMASTIC SUPERSERVICE BLACK OR APPROVED EQUIVALENT.

4. RODS TO BE HIGH TENSILE, HOT ROLLED STEEL WITH TENSILE STRENGTH OF 150,000 P.S.I. AND A MINIMUM YIELD STRENGTH OF 130,000 P.S.I.

		DATE	REVISIONS	DATE	REVISIONS				
FULTON COUNTY STANDARD DETAIL 818 TYPICAL ANCHORS						DGS/DRN/CHKD: REB APPROVED: REW DATE: 12-2-05	FULTON COUNTY	FULTON COUNTY PUBLIC WORKS 141 PRYOR ST. ATLANTA, GA. 30303 404-730-7400 FAX: 404-224-0498	DRAWING NO. 818

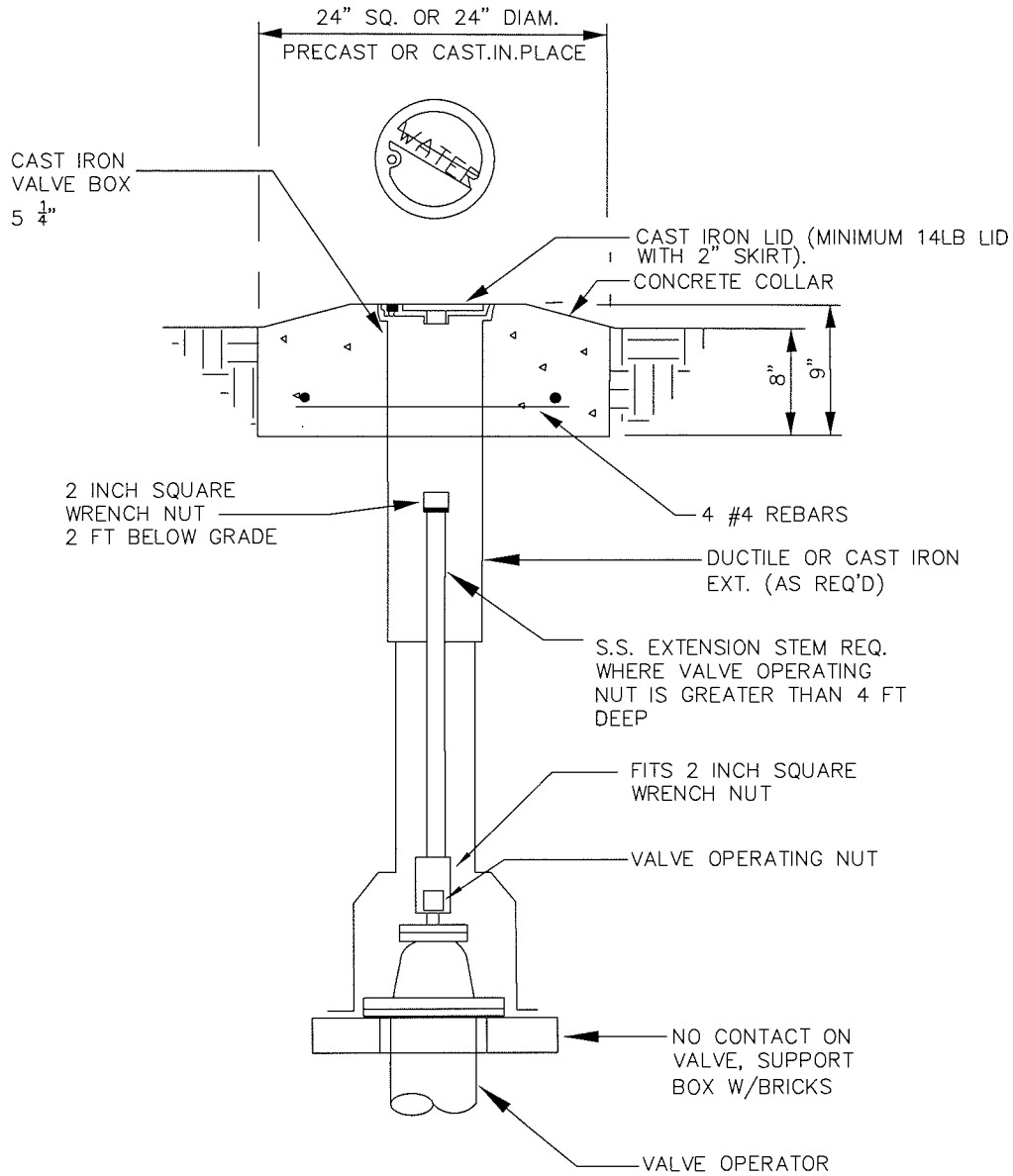

FULTON COUNTY STANDARD DETAIL 819
UNDERGROUND VALVE BOX

DATE	REVISIONS	DATE	REVISIONS

DGS/DRN/CHKD: REB
APPROVED: REW
DATE: 12-2-05

FULTON COUNTY

FULTON COUNTY PUBLIC WORKS
141 PRYOR ST. ATLANTA, GA. 30303
404-730-7400 FAX: 404-224-0498

DRAWING NO.
819

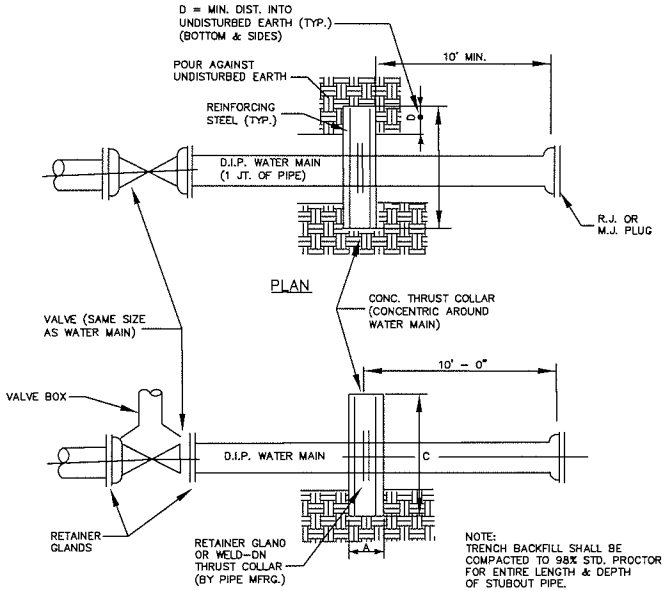

SECTION

MAIN DIA	CONCRETE COLLAR DIM.				REINFORCING STEEL
	A	B	C	D	
24"	1'-10"	9'-3"	9'-3"	2'-9"	#9 @ 12" O.C. E.W.E.F.
16"	1'-3"	6'-6"	6'-6"	1'-10"	#8 @ 12" O.C. E.W.E.F.
10" OR 12"	1'-2"	5'-3"	5'-3"	1'-4"	#7 @ 12" O.C. E.W.E.F.
6" OR 8"	1'-0"	4'-0"	4'-0"	1'-0"	#6 @ 12" O.C. E.W.E.F.

TEST PRESSURE: 250 P.S.I.
SOIL BEARING PRESSURE: 2500 P.S.F.

NOTE:
TERMINATION DETAIL FOR LARGER DIAMETER PIPE SHALL BE DETERMINED FOR EACH PROJECT.

FULTON COUNTY STANDARD DETAIL 820
WATER MAIN TERMINATION

DATE	REVISIONS	DATE	REVISIONS

DGS/DRN/CHKD: REB
APPROVED: REW
DATE: 12-2-05

FULTON COUNTY

FULTON COUNTY PUBLIC WORKS
141 PRYOR ST. ATLANTA, GA. 30303
404-730-7400 FAX: 404-224-0498

DRAWING NO.
820

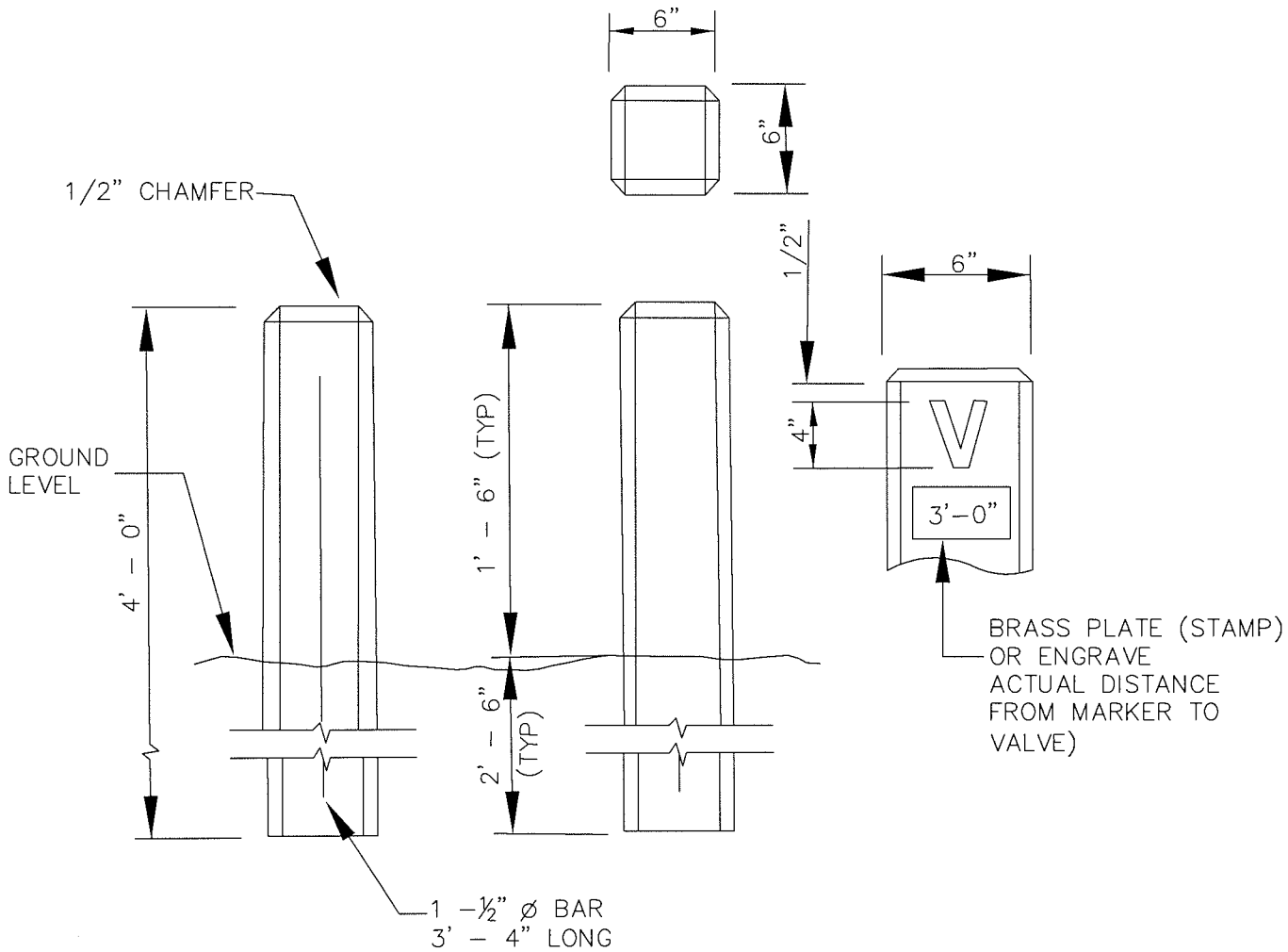

FULTON COUNTY STANDARD DETAIL 821
WATER VALVE MARKER

DATE	REVISIONS	DATE	REVISIONS

DGS/DRN/CHKD: REB
APPROVED: REW
DATE: 12-2-05

FULTON COUNTY

FULTON COUNTY PUBLIC WORKS
141 PRYOR ST. ATLANTA, GA. 30303
404-730-7400 FAX: 404-224-0498

DRAWING NO.
821

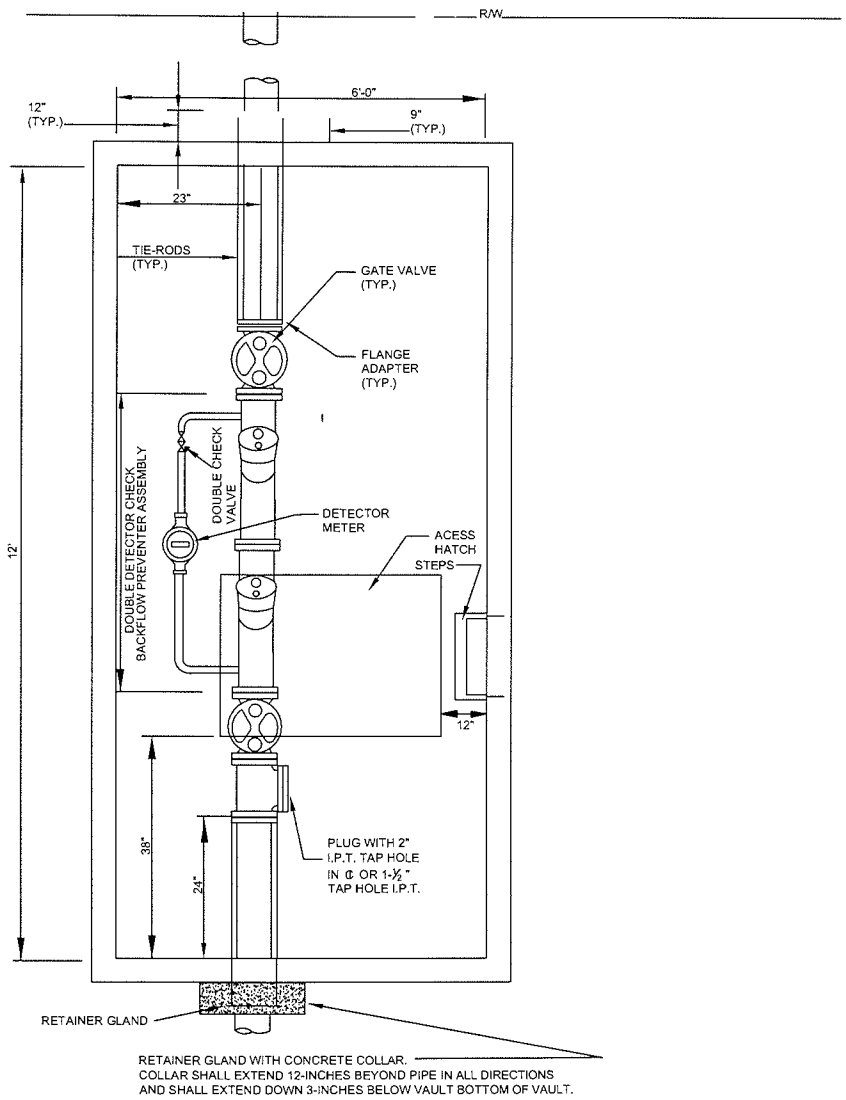

1. TYPE I VAULT SHALL BE USED FOR 3,4,6 OR 8-INCH DOUBLE DETECTOR CHECK BACKFLOW PREVENTER FOR USE WITH 1, 1-½ AND 2-INCH METER.
2. SEE SPECIFICATION SECTION 02665 FOR MATERIAL SPECIFICATIONS. ALL MATERIAL TO BE FURNISHED BY CONTRACTOR.
3. ALL FITTING SHALL BE DUCTILE IRON WITH FLANGED JOINTS. GATE VALVES SHALL BE OUTSIDE STEM AND YOKE (OSY) WITH HANDWHEEL.
4. VAULT SHALL BE PRECAST CONCRETE. MIN. INSIDE HEIGHT SHALL BE 6 FEET. LOAD BEARING VAULT SHALL BE DESIGNED BY PROPERTY OWNER'S ENGINEER, AND SUBMITTED TO COUNTY FOR APPROVAL.
5. ACCESS HATCH/FLOOR DOOR SHALL BE MIN. 36" X 36".
6. VAULT FLOOR SHALL BE # 57 CRUSHED STONE, MIN. 6-INCHES THICK.
7. PROVIDE CONCRETE PIER UNDER BFP 12" X 12" X 18" HIGH.
8. PROVIDE RETAINER GLAND ON PIPE BEYOND VAULT WALLS. PROVIDE TWO TIE RODS FROM FIRST INTERIOR FLANGE TO RETAINER GLANDS, WITH DOUBLE NUTS AND WASHERS. ENCASE RETAINER GLANDS IN CONCRETE. ALSO, PROVIDE TIE RODS FROM RETAINER GLAND TO TAPPING VALVE OR CASING UNDER ROAD, WHICH-EVER IS CLOSER. RODS SHALL BE PROVIDED WITH BITUMASTIC COATING.
9. VAULT WALL OPENINGS SHALL BE SEALED WITH NON-SHRINK GROUT. ENSURE 1-INCH CLEARANCE BETWEEN TOP OF PIPE AND PRECAST WALL.
10. MANHOLE STEPS SHALL BE DOWELLED INTO VAULT WALL AND CENTERED ON ACCESS HATCH.

FULTON COUNTY STANDARD DETAIL 822
FIRE LINE VAULT–TYPE I

DATE	REVISIONS	DATE	REVISIONS

DGS/DRN/CHKD: REB
APPROVED: REW
DATE: 12–2–05

FULTON COUNTY

FULTON COUNTY PUBLIC WORKS
141 PRYOR ST. ATLANTA, GA. 30303
404–730–7400 FAX: 404–224–0498

DRAWING NO. 822

ASSUMPTIONS FOR STANDARD LENGTHS

PIPE: DUCTILE IRON, AWWA C-151
SOIL: GC & SC. CLAYEY GRAVELS, CLAYEY SANDS, GRAVEL-SAND-CLAY MIXTURES, SAND-CLAY MIXTURES.
AVERAGE DEPTH OF BURY: 4 FT
TRENCH TYPE: 4
TEST PRESSURE: 250 PSI
SAFETY FACTOR: 1.5:1 (BASED ON TEST PRESSURE)

NOTES:

1. A FULL LENGTH OF PIPE ATTACHED TO EACH SIDE RUN OR BRANCH OUTLET SHALL BE INSTALLED, NO CUT OR PIECE OF PIPE SHALL BE USED.
2. WHERE FILL DIRT HAS BEEN ADDED TO SHOULDER, DEADMAN WILL BE INSTALLED 10 FT, FROM ANY BRANCH OUTLET OR END PIPE.
3. ALL JOINTS THAT FALL WITHIN THESE STANDARD LENGTH SHOULD BE RESTRAINED. (ON EACH SIDE OF BENDS ON THE BRANCH OUTLET OF TEES, AND BEFORE DEAD-ENDS).
4. STANDARD LENGTHS SHALL BE MODIFIED IF ACTUAL CONDITIONS DO NOT MEET MINIMUM REQUIREMENTS IN "ASSUMPTIONS FOR STANDARD LENGTHS".

RECOMMENDED RESTRAINED LENGTHS OF DUCTILE IRON PIPE

NOM. PIPE SIZE (IN)	90 DEG. BEND	45 DEG. BEND	22.5 DEG. BEND	11.25 DEG. BEND	SIZE ON SIZE TEE*	VALVE/ DEAD-END
6	19 FT	8 FT	4 FT	2 FT	3 FT	35 FT
8	25 FT	11 FT	5 FT	3 FT	13 FT	46 FT
10	30 FT	13 FT	6 FT	3 FT	23 FT	56 FT
12	36 FT	15 FT	7 FT	4 FT	34 FT	67 FT
14	41 FT	17 FT	8 FT	4 FT	43 FT	77 FT
16	46 FT	19 FT	9 FT	5 FT	53 FT	87 FT
18	51 FT	21 FT	10 FT	5 FT	63 FT	96 FT
20	56 FT	23 FT	11 FT	6 FT	72 FT	106 FT
24	65 FT	27 FT	13 FT	7 FT	91 FT	126 FT

*RECOMMENDED RESTRAINED LENGTHS FOR TEES ARE FOR THE BRANCH OUTLET AND ASSUME A MINIMUM 10 FT. SECTION OF PIPE ATTACHED TO EACH SIDE OF THE RUN. RESTRAINT DEVICES SHOULD ALSO BE INSTALLED ON BOTH RUN JOINTS OF THE TEE ITSELF.

FULTON COUNTY STANDARD DETAIL 823
RESTRAINED JOINT PIPE STANDARD LENGTHS

DATE	REVISIONS	DATE	REVISIONS

DGS/DRN/CHKD: REB
APPROVED: REW
DATE: 12-2-05

FULTON COUNTY

FULTON COUNTY PUBLIC WORKS
141 PRYOR ST. ATLANTA, GA. 30303
404-730-7400 FAX: 404-224-0498

DRAWING NO. 823

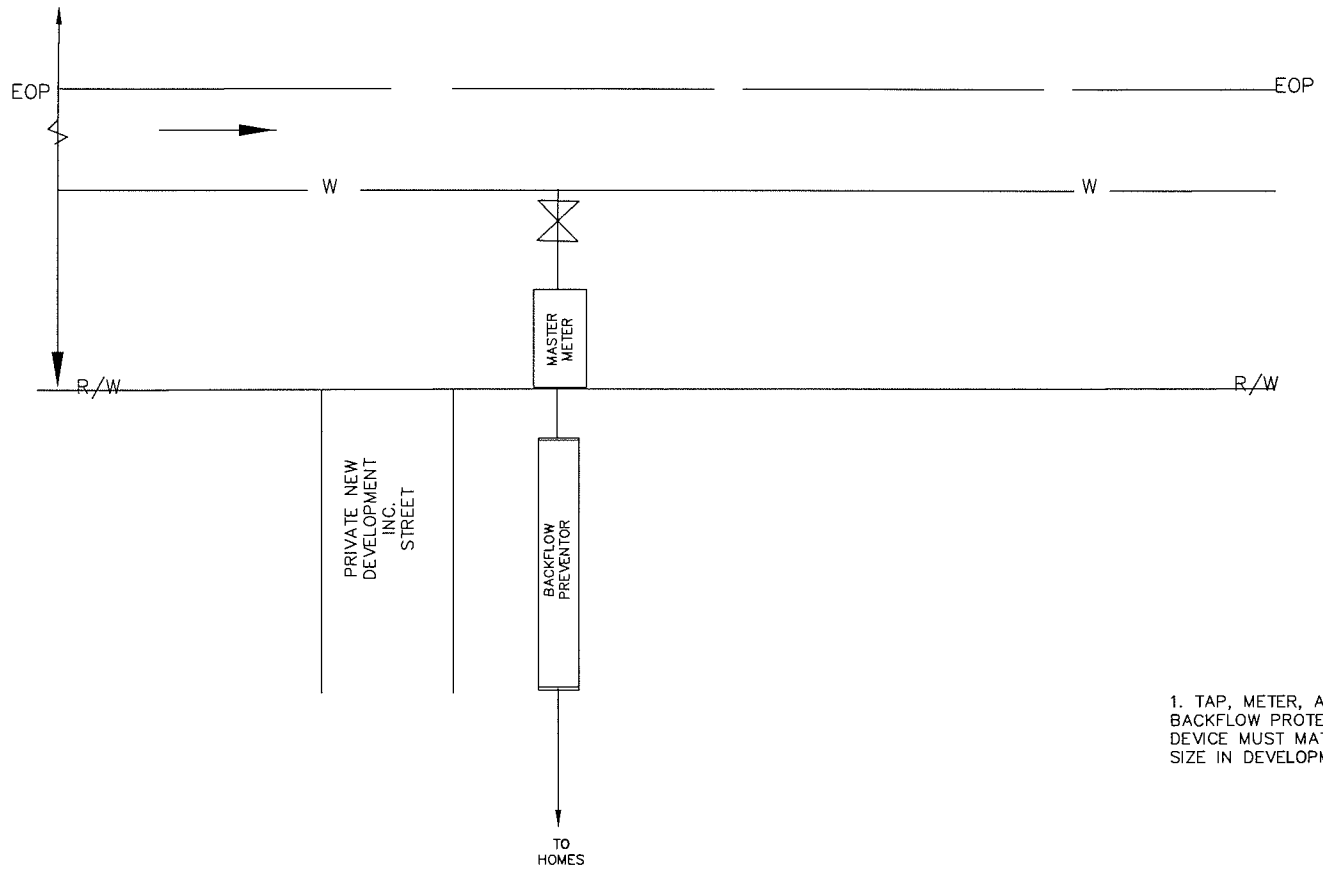

1. TAP, METER, AND BACKFLOW PROTECTION DEVICE MUST MATCH MAIN SIZE IN DEVELOPMENT.

N.T.S.

FULTON COUNTY STANDARD DETAIL 824 WATER SERVICES TOWNHOME/APT./CONDOMINIUM PRIVATE DEVELOPMENT		DATE	REVISIONS	DATE	REVISIONS	DGS/DRN/CHKD: CMS APPROVED: REW DATE: 12-2-05	FULTON COUNTY	FULTON COUNTY PUBLIC WORKS 141 PRYOR ST. ATLANTA, GA. 30303 404-730-7400 FAX: 404-224-0498	DRAWING NO. 824

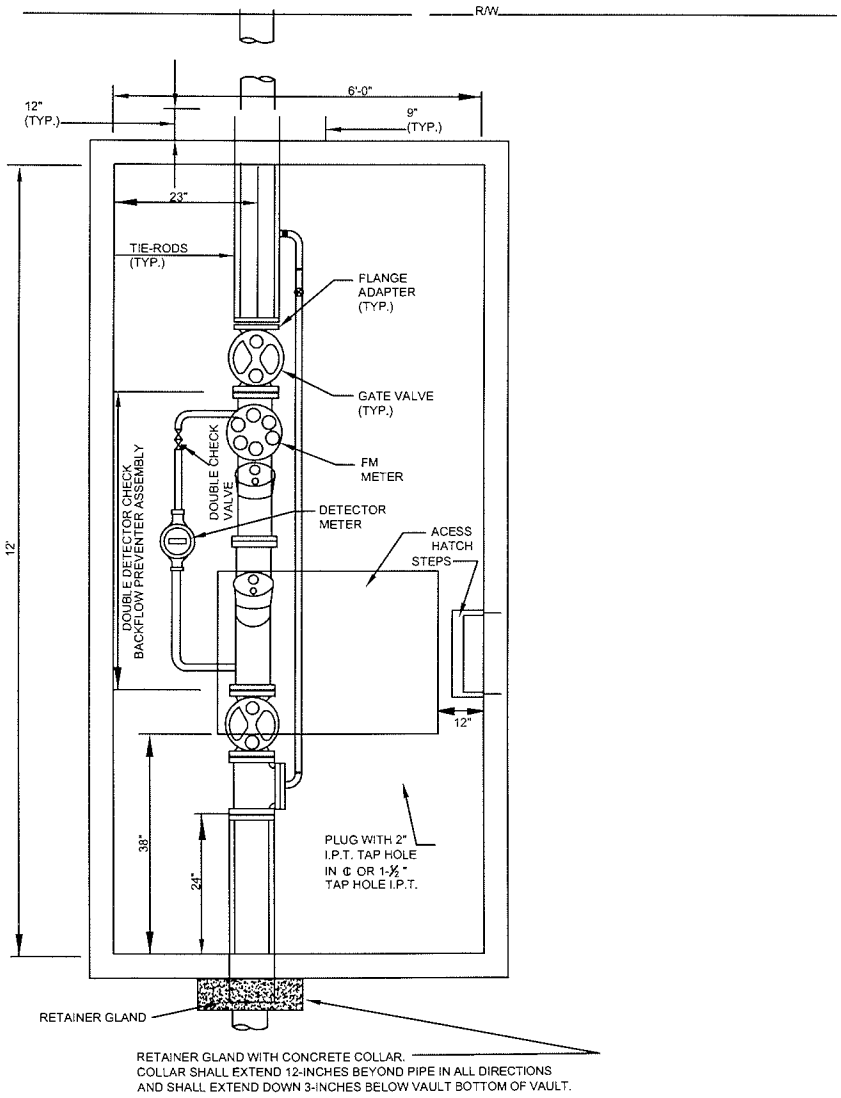

1. TYPE I VAULT SHALL BE USED FOR 3,4,6 OR 8-INCH FM METER.
2. SEE SPECIFICATION SECTION 02665 FOR MATERIAL SPECIFICATIONS. ALL MATERIAL TO BE FURNISHED BY CONTRACTOR.
3. ALL FITTINGS SHALL BE DUCTILE IRON WITH FLANGED JOINTS. GATE VALVES SHALL BE WITH HANDWHEELS.
4. VAULT SHALL BE PRECAST CONCRETE. MIN. INSIDE HEIGHT SHALL BE 6 FEET. LOAD BEARING VAULT SHALL BE DESIGNED BY PROPERTY OWNER'S ENGINEER, AND SUBMITTED TO COUNTY FOR APPROVAL.
5. ACCESS HATCH/FLOOR DOOR SHALL BE MIN. 36"X36" (BILCO MODEL PCM-5) FOR 3 & 4-INCH METERS OR 54"X54" (BILCO MODEL PDCM-3) FOR 6 & 8-INCH METERS.
6. VAULT FLOOR SHALL BE # 57 CRUSHED STONE, MIN. 6-INCHES THICK.
7. PROVIDE RETAINER GLAND ON PIPE BEYOND VAULT WALLS. PROVIDE TWO TIE RODS FROM FIRST INTERIOR FLANGE TO RETAINER GLANDS, WITH DOUBLE NUTS AND WASHERS. ENCASE RETAINER GLANDS IN CONCRETE. ALSO, PROVIDE TIE RODS FROM RETAINER GLAND TO TAPPING VALVE OR CASING UNDER ROAD, WHICH-EVER IS CLOSER. RODS SHALL BE PROVIDED WITH BITUMASTIC COATING.
8. VAULT WALL OPENINGS SHALL BE SEALED WITH NON-SHRINK GROUT. ENSURE 1-INCH CLEARANCE BETWEEN TOP OF PIPE AND PRECAST WALL.
9. MANHOLE STEPS SHALL BE DOWELLED INTO VAULT WALL AND CENTERED ON ACCESS HATCH.

FM METER		
METER SIZE	6" & 8"	3" & 4"
VAULT INTERIOR DIMENSION	12' X 6'	9' X 5'

FULTON COUNTY STANDARD DETAIL 825
FM ASSEMBLY

DATE	REVISIONS	DATE	REVISIONS

DGS/DRN/CHKD: CMS
APPROVED: REW
DATE: 3-7-06

FULTON COUNTY

FULTON COUNTY PUBLIC WORKS
141 PRYOR ST. ATLANTA, GA. 30303
404-730-7400 FAX: 404-224-0498

DRAWING NO. 825

Part 1 General

1.01 Description

A. The work will consist of providing all labor, equipment and materials necessary for the construction, installation, and emergency repair of miscellaneous water mains, water service lines, and other required improvements to the water distribution system within Fulton County. The work includes providing an emergency water main repair crew on an as needed basis. All work shall be in conformance with the contract documents, drawings and Fulton County Standards and Specifications. Being this is a miscellaneous standby contract; the location of the work will be in various locations through out Fulton County. Projects will be assigned by issuance of a Notice to Proceed for that individual project.

1.02 Project Location

The projects will be located at various locations throughout Fulton County, GA.

1.03 Quantities

The Owner reserves the right to alter the quantities of work to be performed or to extend or shorten the improvements at any time when and as found necessary, and the Contractor shall perform the work as altered, increased or decreased. Payment for such increased or decreased quantity will be made in accordance with the Instructions to Bidders. No allowance will be made for any change in anticipated profits nor shall such changes be considered as waiving or invalidating any conditions or provisions of the Contract and Bond.

1.04 Partial Owner Occupancy

The existing facilities to which these improvements are being made will continue operation during the period of construction.

1.03 Coordination of Work

A. The Contractor shall coordinate the work with third parties (such as power, natural gas, or telephone companies) in areas where such parties may have rights to underground property or facilities.

B. The Contractor shall request from involved third parties maps or other descriptive information as to the nature and location of such underground facilities or property. The Contractor shall make all necessary investigations to determine the existence and location of underground utilities.

C. The Contractor will be held responsible for any damage to and for maintenance and protection of existing utilities and structures.

D. The Contractor shall coordinate the work with owners of private and public property where access is required for the performance of the work. Legal access will be acquired and provided by the Owner.

END OF SECTION

Part 1 General

1.01 Partial Occupancy By Owner

Whenever, in the opinion of the Engineer, any section or portion of the Work or any structure is in suitable condition, it may be put into use upon the written order of the Engineer and such usage will not be held in any way as an acceptance of said Work or structure, or any part thereof, or as a waiver of any of the provisions of these Specifications and the Contract. Pending final completion and acceptance of the Work, all necessary repairs and replacements, due to defective materials or workmanship or operations of the Contractor, for any section of the Work so put into use shall be performed by the Contractor at Contractor's own expense.

END OF SECTION

Part 1 General

1.01 Scope

A. The Bid lists each item of the Project for which payment will be made. **No payment will be made for any items other than those listed in the Bid.**

B. Required items of work and incidentals necessary for the satisfactory completion of the work which are not specifically listed in the Bid, and which are not specified in this Section to be measured or to be included in one of the items listed in the Bid, shall be considered as incidental to the work. All costs thereof, including Contractor's overhead costs and profit, shall be considered as included in the unit prices bid for the various Bid items. The Contractor shall prepare the Bid accordingly.

C. Work includes furnishing all labor, equipment, tools and materials, which are not furnished by the Owner and performing all operations required to complete the work satisfactorily, in place, as specified and as indicated on the Drawings.

1.02 Descriptions

A. Measurement of an item of work will be by the unit indicated in the Bid.

B. Final payment quantities shall be determined from actual quantities installed and measured in the field.

C. Payment will include all necessary and incidental related work not specified to be included in any other item of work listed in the Bid.

D. Unless otherwise stated in individual sections of the Specifications or in the Bid, or as approved in writing by the Engineer prior to beginning the work, no separate payment will be made for any item of work, materials, parts, equipment, supplies or related items required to perform and complete the work. The costs for all such items required shall be included in the price bid for item of which it is a part. In the event that the Engineer requests Work that is agreed by both the Engineer and the Contractor as not included in the Bid, that item of work will be paid for at actual cost (invoices required) plus 10% markup.

E. Payment will be made by extending unit prices multiplied by quantities provided and then summing the extended prices to reflect actual work. Such price and payment shall constitute full compensation to the Contractor for furnishing all plant, labor, equipment, tools and materials not furnished by the Owner and for performing all operations required to provide to the Owner the entire Project, complete in place, as specified and as indicated on the Drawings.

F. “Products” shall mean materials or equipment permanently incorporated into the work.

G. “Provide” shall mean furnish and install.

1.03 Non Payments

A. No separate payment shall be made for the restoration of developed property and the cost shall be included in the overall prices for the execution of the work unless specifically noted otherwise.

B. No separate payment shall be made for excavation, disposal of rubbish and debris, pipe bedding, backfill, dewatering of trench, repair of damaged properties. All testing required for the execution of the work shall be done as part of the price for the item involved.

C. No separate payment shall be made for any traffic control, work area protection, recording, safety measures, set-up of equipment and set-up of staging area except as indicated below. Payment for these items shall be part of the unit price bid for each particular item of work.

D. No separate payment shall be made for providing detail surveys needed for construction. The Contractor shall be responsible in providing further survey necessary to complete the Work. The Contractor shall carefully preserve the established points, and in case of willful or careless destruction, the Contractor shall be responsible for the costs of reestablishing the bench marks, reference points and stakes.

1.04 Contractor Mobilization/Demobilization

All costs associated with mobilization and demobilization of all required resources, a one time cost for each non-emergency project assigned by the Owner, shall be included in the unit prices bid for CONTRACTOR MOBILIZATION/DEMOBILIZATION, based on the project sizes listed in the Bid.

1.05 Water Mains and Accessories

A. Existing Utilities and Obstructions

1. Horizontal Conflict: Payments for conflicts with existing utilities shall be made only where additional fittings and/or additional lengths of pipe are approved by the Engineer. Said payment shall be made at the unit prices in the Bid. No other payment will be made for any delay or extra cost encountered by the Contractor due to protection, avoidance or relocation of existing utilities, mains or services or changing the horizontal alignment of the water main.

2. Vertical Conflict: Where authorized by the Engineer, payment for additional depth of cut required to avoid vertical conflicts shall be made at the unit prices bid for water main. No payment will be made for relocation of existing utilities except as authorized by the Engineer.

B. Location and Grade: No separate payment shall be made for survey work performed by or for the Contractor in the establishment of reference points, bench marks, cut sheets, limits of right of way or easement, including their restoration, as well as centerline or baseline points.

C. Construction Along Highways, Streets and Roadways: No separate payment shall be made for traffic control or maintaining highways, streets, roadways and driveways, except as authorized by the Engineer.

D. Ductile Iron Pipe Water Main

1. Payment for water main shall be made at the unit price bid for WATER MAIN, for the quantity and type provided at the appropriate depth. Payment will be made at the one unit price for the actual depth of the water line.

2. Measurement for payment at the unit price for WATER MAIN shall be made along the centerline of the pipe, through valves and fittings. Depth of cut shall be measured from pipe invert to ground level at the pipe centerline. Cut sheets prepared by the Contractor and approved by the Engineer shall be the basis for payment.

3. The unit price bid for WATER MAIN shall include all costs for installation of the water line as required including, but not limited to, materials, labor, excavation, dewatering, shoring, bedding, haunching, backfill, compaction, clean-up, testing, and all other related items not listed as separate items in the Bid.

4. The unit price bid for LABOR COST TO INSTALL COUNTY PROVIDED DIP WATER MAIN shall include all costs for installation of the water line and appurtenances (valves, valve boxes, fittings and hydrants) with County provided pipe materials as required including, but not limited to, labor, excavation, dewatering, shoring, bedding, haunching, backfill, compaction, clean-up, testing, and all other related items not listed as separate items in the Bid.

5. Payment for pipe INSTALLED IN STEEL CASING will be made in addition to payment for water main installed at the appropriate depth. the unit price bid for pipe INSTALLED IN STEEL CASING shall include all additional costs associated with providing the appropriate size steel casing pipe, spacers, grout, brick, as required for the complete installation of pipe in casing via open-cut installation. All costs associated with installation of the water line, including excavation, dewatering, etc. shall be included in the unit price bid for WATER MAIN.

6. No payment shall be made for sections of pipe which are not installed.

7. No additional payment shall be made for replacement of defective materials.

8. No payment shall be made for sections of pipe which have not passed the required tests, or if the area has not been cleaned up to the satisfaction of the Engineer.

9. No separate payment will be made for cutting and beveling pipe.

10. Thrust Restraint: No separate payment will be made for retainer glands or harnessing. Payment for concrete thrust collars shall be made at the unit price bid for CONCRETE THRUST COLLARS.

E. Fittings

1. The unit price bid for FITTINGS shall include the costs of fittings and all joint accessories and the cost of all related blocking. The weight of fittings used for payment shall be AWWA C110 standard weight for C110 fittings, or AWWA C153 standard weight for C153 fittings and shall not include the weight of bolts, glands, or cement lining.

2. Weight of fittings for payment for diameters 54 inches and larger shall be manufacturer's standard weight and shall not include weight of bolts, glands or cement lining.

3. Anchor couplings not included in a fire hydrant assembly will be paid for at the unit price bid for FITTINGS and shall not be included in the quantities measured for water main. Weight for payment of anchor couplings will be determined from the manufacturer's standard weight, including the coupling and rotating split gland.

4. Hydrant tees not included in a fire hydrant assembly will be paid for at the unit price bid for FITTINGS. Weight for payment of anchor couplings will be determined from the manufacturer's standard weight.

F. Fire Hydrants

1. Payment for fire hydrants shall be made for the actual quantity installed at the unit price bid for FIRE HYDRANT ASSEMBLY. The unit price bid for fire hydrant assembly shall include all costs associated with providing a complete fire hydrant assembly, except as listed below, including 4.5 foot depth of bury fire hydrant, 6-inch gate valve, valve box, related blocking, gravel drain, grade-lock fitting, anchor couplings, hydrant tee, and all associated labor and materials.

2. Payment for hydrant lead piping and blow off piping will be made at the unit price bid for 6-inch WATER MAIN, except when anchor couplings are used.

3. Fittings for blow off and air release hydrant leads will be paid for at the unit price bid for FITTINGS.

4. Payment for hydrant extension sections where the depth of bury of fire hydrants is greater than 4.5 feet shall be made to the nearest half foot at the unit price Bid for HYDRANT EXTENSION. No distinction shall be made between the additional barrel lengths provided by measuring and ordering the proper depth of bury for the hydrants and the additional barrel length provided by adding extension kits after the hydrant is ordered. The unit price bid for HYDRANT EXTENSION shall include the cost of valve extension stems.

5. Salvage Existing Hydrant: Measurement for payment for removal and salvaging or disposal of existing fire hydrants shall be based on the actual quantity at the unit price bid per each hydrant removed. The unit price bid shall include all costs associated with removal of the hydrant assembly, plugging the existing main, restoration of the area, transportation of the salvaged hydrant assembly to the County's facility located at 11575 Maxwell Road, Alpharetta, GA , or disposal of the assembly if directed by the Engineer.

G. Valves: The unit price bid for VALVES shall include the cost of providing the valve, extension stem, valve box, valve marker, all joint accessories, and all other related items.

H. Valve Adjustments in Pavement (0'-5') - The unit price bid for VALVE ADJUSTMENTS IN PAVEMENT (0'-5') shall include the cost of providing the new valve box and lid or 6 inch ductile iron pipe, excavation, backfill, concrete pad, pavement repair and all other related items.

I. Valve Adjustments in Pavement (5'or greater)- The unit price bid for VALVE ADJUSTMENTS IN PAVEMENT (5' or greater) shall include the cost of providing

the new valve box and lid or 6 inch ductile iron pipe, valve extension, excavation, backfill, concrete pad, pavement repair and all other related items.

J. Valve Adjustments out of Pavement (0'-5') - The unit price bid for VALVE ADJUSTMENTS IN PAVEMENT (0'-5') shall include the cost of providing the new valve box and lid or 6 inch ductile iron pipe, manufactured concrete pad, excavation, backfill, and all other related items.

K. Valve Adjustments out of Pavement (5' or greater) - The unit price bid for VALVE ADJUSTMENTS IN PAVEMENT (5' or greater) shall include the cost of providing the new valve box and lid or 6 inch ductile iron pipe, valve extension, manufactured concrete pad, excavation, backfill, and all other related items.

I. Solid Sleeves: Payment for solid sleeves shall be made at the unit price bid for FITTINGS. No payment shall be made for fittings provided due to the Contractor's sequence of construction, layout problems or repairs, except for those shown on the Drawings or specified.

1.06 Connections to Existing Water Lines

A. The unit price bid for TAPPING SLEEVES AND VALVES shall include the cost of locating the existing line, providing the sleeve, valve, extension stem, valve box, valve marker, all joint accessories, related support blocking and accessories, and all labor, materials, and tools required for a complete installation, including tapping the existing line. Payment for required thrust blocking will be paid for at the unit price bid for CONCRETE THRUST BLOCKING.

B. The unit price bid for CUT IN CONNECTION shall include the cost of locating and cutting the existing line and making the connection of the new line to the existing line, including all labor, materials, and tools required for a complete installation. All required fittings, valves, ductile iron water main, and thrust blocking will be paid for at the unit price bid for the item to which it pertains.

C. The unit price bid for STRAIGHT CONNECTION shall include the cost of locating the existing line, removing existing plugs or other fittings and cutting the existing line, making connection of the new line to the existing line, including all labor, materials, and tools required for a complete installation. All required fittings, valves, ductile iron water main, and thrust blocking will be paid for at the unit price bid for the item to which it pertains.

1.07 Abandon Existing Water Main

A. Cut and Plug / Deadman Restraint: The unit price bid for CUT AND PLUG / DEADMAN RESTRAINT shall include all costs associated with cutting and plugging an existing water line, including locating the existing line, excavation, dewatering, cutting the line as necessary to remove the existing pipe and as directed by the Engineer, plugging openings where the cuts were made, providing all anchors, rods, straps, and all other related items. Payment will be made for the quantity installed at the unit price bid for the appropriate size water line.

B. Payment for plugs will be made at the unit price bid for FITTINGS.

C. Payment for concrete thrust blocking or thrust collars will be made at the unit price bid for the appropriate item.

1.08 Clean-Up, Testing, and Disinfection

A. No separate payment will be made for clean-up, pressure testing, and disinfection. All costs associated with clean up, pressure testing and disinfection of water main shall be included in the unit price bid for WATER MAIN. Laboratory fees will be paid for through the TESTING cash allowance. No payment shall be made for tests that fail to verify required results.

1.09 Water Service Connections

A. The unit price bid for NEW SERVICE SETUP shall include fixed labor and materials associated with installation of a new water service connection, including direct tap, corporation stop, meter box of the appropriate type, curb stop, associated fittings required for a complete installation, but not including the copper service line itself. Measurement for payment will be made on the number of new services installed, at the unit price bid for Each setup.

B. The unit price bid for NEW 1-INCH SERVICE LINE shall include all variable labor and materials associated with installation of a new water service line, including 1-inch copper tubing from the water main to the water meter, and not including items included in NEW SERVICE SETUP above. Measurement for payment will be made from the tap to the water meter, per linear foot actually installed.

C. The unit price bid for NEW 1-1/2-INCH SERVICE LINE shall include all variable labor and materials associated with installation of a new water service line, including 1-1/2-inch copper tubing from the water main to the water meter, and not including items included in NEW SERVICE SETUP above. Measurement for payment will be made from the tap to the water meter, per linear foot actually installed.

D. The unit price bid for NEW 2-INCH SERVICE LINE shall include all variable labor and materials associated with installation of a new water service line, including 2-inch copper tubing from the water main to the water meter, and not including items included in NEW SERVICE SETUP above. Measurement for payment will be made from the tap to the water meter, per linear foot actually installed.

1.10 Water Service Changeovers

A. The unit price bid for CHANGEOVER SETUP shall include fixed labor and materials associated with replacement of an existing water service connection, including locating the existing service, abandoning the existing service line, any necessary boring and any associated pavement removal and replacement necessary to accomplish the work. The unit price bid for CHANGEOVER SETUP shall include direct tap, corporation stop, curb stop, associated fittings required for a complete installation, but not including the copper service line itself. It is assumed that the meter and meter box will remain in place and will be reused. Measurement for payment will be made on the number of service changeovers installed, at the unit price bid for Each setup.

B. The unit price bid for REPLACE EXISTING WITH 1-INCH SERVICE LINE shall include all variable labor and materials associated with replacement of an existing water service line, including 1-inch copper tubing from the water main to the water meter, and not including items included in CHANGEOVER SETUP

above. Measurement for payment will be made from the tap to the water meter, per linear foot actually installed.

C. The unit price bid for REPLACE EXISTING WITH 1-1/2-INCH SERVICE LINE shall include all variable labor and materials associated with replacement of an existing water service line, including 1-1/2-inch copper tubing from the water main to the water meter, and not including items included in CHANGEOVER SETUP above. Measurement for payment will be made from the tap to the water meter, per linear foot actually installed.

D. The unit price bid for REPLACE EXISTING WITH 2-INCH SERVICE LINE shall include all variable labor and materials associated with replacement of an existing water service line, including 2-inch copper tubing from the water main to the water meter, and not including items included in CHANGEOVER SETUP above. Measurement for payment will be made from the tap to the water meter, per linear foot actually installed.

E. Payment for WATER METER RELOCATION will be made only as ordered by the Engineer, in addition to payment for service changeovers as appropriate. The unit price bid for WATER METER RELOCATION shall include all additional work required beyond the fixed cost for changeover setup plus the linear foot cost for replacing an existing service line. The unit price bid shall include disconnecting the existing meter and pressure reducing valve, moving the meter, meter box and pressure reducing valve to the new location, reconnecting the meter and pressure reducing valve to the existing house service line including up to 10 linear feet of house side copper tubing, reinstalling the meter box for the meter in accordance with the Drawings and providing a new valve box for the pressure reducing valve.

1.11 Precast Valve Vault or Manhole

A. The unit price bid for 4 OR 5-FOOT DIAMETER PRECAST VALVE VAULT OR MANHOLE, at the depths listed in the Bid, shall include all costs associated with construction of a complete valve vault or manhole on a new water line, including excavation, shoring, dewatering, backfilling, compaction, crushed stone bedding, grouting, and all incidental items required to complete the installation.

B. Measurement for payment at the unit price for PRECAST VALVE VAULT OR MANHOLE shall be made from the outside bottom of the vault or manhole to the top of the top section. Payment will be made at the one unit price for the actual depth of the vault or manhole.

1.12 Bore and Jack Casings

A. The unit price bid for BORE AND JACK CASING shall include all costs associated with installation of the casing and carrier pipe, including but not limited to excavation, shoring, dewatering, backfilling, compaction, steel casing pipe, ductile iron carrier pipe, spacers, end seals, grout, and other accessories, for installing the pipe complete in place. The unit price bid shall assume that all bore and jack casing installations exceed 40 feet in length.

B. Payment for casing shall be made only at the completion of all work specified for the casing installation. No partial payment shall be made for the construction of the casing without carrier pipe.

C. Measurement for payment shall be made along the centerline of the pipe line to the limits of bore and jack as ordered by the Engineer.

D. Casing pipe may be included in Partial Payment Requests as stored materials, if the casing pipe is stored at the Project site. Casing pipe which has been properly installed, but has not yet been paid for as installed casing, may also be included as stored materials.

E. Payment for pipe in casing shall be made only at the completion of all work specified for the pipe installation. Payment for pipe in the casing shall be made only at the one unit price bid for the BORE AND JACK CASING.

F. In the event that rock is encountered during the installation of the pipe casing which, in the opinion of the Engineer, cannot be removed through the casing then the Engineer may authorize the Contractor to complete the crossing by another method via a change directive.

G. No additional payment shall be made for rock excavation through the casing.

1.13 Storm Drain Pipe Installation

A. The unit price bid for STORM DRAIN PIPE shall include all costs associated with the installation or replacement of the appropriate size and type of storm drain piping associated with construction of a water line, where directed by the Engineer. Costs for excavation, shoring, dewatering, backfilling, compaction, and bedding shall be included in the unit price bid for WATER MAIN.

B. Measurement for payment will be made along the centerline of the storm drain pipe installed.

C. No separate payment will be made for support of existing pipe when installing new water line over or under existing storm water piping. All costs for support shall be included in the unit price bid for WATER MAIN.

D. Costs for removing and replacing existing storm water pipe for ease of construction when installing new water line shall be included in the unit price bid for WATER MAIN. Payment for storm drain pipe will only be made where removal or replacement is approved or ordered by the Engineer prior to removal.

1.14 Erosion and Sedimentation Control

A. General

1. No separate payment shall be made for erosion and sedimentation controls, except as noted below. All other erosion and sedimentation control costs shall be included in the unit price bid for the item to which it pertains.

2. No payment will be made for any portion of the Project for which temporary erosion and sedimentation controls are not properly maintained.

3. Quantities for payment shall be based upon actual quantity constructed by the Contractor.

B. Construction Exits: All costs for construction exits, including installation, maintenance, repair, and removal, shall be included in the unit price bid for CONSTRUCTION EXITS. The unit price bid shall include geotextile underliner, stone, and all incidental costs associated with maintaining a construction exit to Fulton County standards.

1. If the action of the construction vehicles traveling over the gravel pad does not sufficiently remove mud and debris, the vehicle tires shall be washed prior to allowing vehicles to enter public right-of-way. No additional payment will be made for the cost of washing tires.

2. No payment will be made for construction exits that are improperly constructed or use materials that are not approved.

C. Reinforced Silt Fence: All costs for Type C silt fence, where ordered by the Engineer, including installation, maintenance, repair, replacement, and removal, shall be included in the unit price bid for REINFORCED SILT FENCE.

D. Hay Bale Check Dams: All costs for hay bale check dams, including hay bales, necessary earthwork, staking, periodic maintenance and repair, and removal of sediment and hay bales following establishment of permanent erosion control measures shall be included in the unit price bid for HAY BALE CHECK DAMS.

E. Stone Check Dams: All costs for stone check dams, including stone, geotextile underliner, necessary earthwork, periodic maintenance and repair, and removal of sediment and stone following establishment of permanent erosion control measures shall be included in the unit price bid for STONE CHECK DAM. Measurement for payment will be made to the limits allowed in accordance with the Standard Details and Specifications..

F. Inlet Sediment Traps: All costs for temporary inlet sediment traps (silt box), including installation, maintenance, repair and removal, shall be included in the unit price bid for INLET SEDIMENT TRAPS.

G. Pigs-in-a-Blanket: All costs for pigs in a blanket, including installation, maintenance, repair and removal, shall be included in the unit price bid for PIGS-IN-A-BLANKET.

H. Rip Rap With Filter Fabric Underlay: All costs for rip rap, including filter fabric, installation, maintenance, repair and removal, as required by the Standard Details and Specifications, or as directed by the Engineer, shall be included in the unit price bid for RIP RAP.

I. Box Gabion – 3’x3’x6’ Baskets: All costs for box gabions, including stone, wire mesh, stakes, anchors, filter fabric, assembly of box gabion, placement, excavation, backfill, compaction, and all incidental costs shall be included in the unit price bid for BOX GABION.

J. Tree Protection Fence: All costs for either passive or active tree protection fence, also known as orange mesh safety fence, including installation, maintenance, repair and removal, shall be included in the unit price bid for TREE PROTECTION FENCE.

1.15 Vegetation Restoration

A. Temporary Seeding: Temporary seeding and mulching shall be applied to all disturbed area to be left exposed for a period greater than 14 days, or as ordered by the Engineer. The unit price bid for TEMPORARY SEEDING shall include all costs associated with spreading fast growing seed, mulching, watering, maintenance and repair until permanent grassing is established.

B. Permanent Seeding: All costs for permanent seeding, including fine grading, raking, soil preparation (removal of rocks and other objectionable materials), sewing the appropriate type of grass seed, fertilizing, mulching, watering, temporary protective measures, maintenance and repair until permanent grassing is established, shall be included in the unit price bid for PERMANENT SEEDING. Permanent seed will be applied only after final grading and dress-up of disturbed area have been completed to the satisfaction of the Engineer.

C. Sod Grassing: Where ordered by the Engineer, sod shall be provided at the unit price bid for SOD GRASSING for any type. All costs for proper installation, including preparation of surface, installation, rolling, compacting, watering, maintenance, repair, and any temporary measures required to protect the sod until establishment, shall be included in the unit price bid for SOD GRASSING.

D. Hydroseeding: All costs for hydroseeding, including preparation of surface, maintenance, repair, and any temporary measures required to protect the area until establishment, shall be included in the unit price bid for HYDROSEEDING.

E. In no case shall any one area be paid more than once for temporary grassing or for permanent grassing.

F. If an area is temporarily grassed, and as directed by the Engineer the area is left that way permanently, no additional payment will be made for permanent grassing.

G. Measurement for payment will be made by square yard, along the water line centerline, to the widths allowed by the Standard Details and Specifications.

1.16 Temporary Stream Crossing

A. Temporary Stream Crossing: All costs for constructing temporary stream crossings, whether for contractor access to the work or for work crossing streams, shall be included in the unit price bid for TEMPORARY STREAM CROSSING. All labor and materials including temporary culverts, stone, filter fabric underlay, check dams, bypassing, necessary earthwork, periodic maintenance and repair, and removal of sediment and all materials placed by the Contractor, following the end of the usefulness of the temporary crossing, shall be included in the unit prices bid for TEMPORARY STREAM CROSSING.

B. Stream Crossings shall be constructed as shown in the Standard Details and Specifications, limited to 10 feet upstream and 10 feet downstream from top of trench excavation and from five feet beyond top of bank, across stream or ditch bank and bottom, to five feet beyond top of bank. Any other areas at streams or ditches disturbed by the Contractor, which may require rip rap, shall be rip rapped at no additional cost to the Owner.

1.17 Trench Excavation and Stabilization

A. No separate or additional payment will be made for any special or unique method, means, techniques or equipment necessary for the Contractor's

compliance with the Specifications, regulatory requirements, permits, laws or regulations which govern this Project.

B. Trench Excavation: No separate payment will be made for trench excavation. All costs shall be included in the unit price bid for the item to which it pertains at the appropriate depth.

C. Sheeting, Bracing and Shoring: No separate payment will be made for providing any sheeting, bracing and shoring. All costs shall be included in the unit price bid for the item to which it pertains at the appropriate depth.

D. Dewatering Excavations: All costs of equipment, labor and materials required for dewatering shall be included in the price bid for the item to which it pertains.

E. Trench Foundation and Stabilization

1. No payment for trench stabilization shall be authorized until after the trench has been dewatered. If the pipe is installed in an inadequately prepared trench bottom, the Engineer shall notify the Contractor in writing of the deficiency and will not authorize payment for that portion of that length of pipe which was improperly installed.

2. Payment for trench stabilization shall be made on the basis of the amount authorized and the unit price bid for TRENCH STABILIZATION. Payment shall include all costs for the removal and disposal of the unsuitable material and replacement with the materials listed in the Bid including filter fabric. No additional payment will be made for material required for specified bedding.

F. Bedding and Haunching

1. The unit price bid for pipe for WATER MAIN shall include excavation of the trench to the depth below the pipe necessary to provide specified bedding and to lay the water line to grade. Measurements for payment will be made only to the pipe invert.

2. No separate payment will be made for material used to provide specified bedding. The cost of all bedding materials shall be included in the unit price bid for the item to which it relates, except for trench stabilization.

3. No additional payment will be made for improved bedding required to compensate for over excavation of the trench.

G. Trench Rock Excavation

1. Rock excavation shall be paid for in addition to payment for normal pipe excavation accounted for in the unit price bid for WATER MAIN. Payment will be made for the measured quantity of rock excavated, at the sum of the unit prices for Trench Rock Base Cost and Trench Rock Premium Cost if applicable.

2. The unit price for Trench Rock Base Cost is for the normally anticipated cost of rock excavation, the cost of additional bedding and backfill material as specified and all costs incidental thereto.

3. The unit price bid for Trench Rock Premium Cost shall be for all additional costs for rock excavation which, in the opinion of the Contractor, are in excess of the Base Cost, including but not limited to extra blasting protection, closer grouping of blasting holes, more detonator caps, more caution, etc. The Contractor shall not bid less than zero (bid a deduct) for the Trench Rock Premium Cost. Any Bids containing a deduct will be declared non-responsive and rejected by the Owner.

4. The maximum allowable volume of rock excavation for payment shall be based on a trench width equal to the outside diameter of the pipe barrel plus 18 inches, but not less than 36 inches, and depth of rock on the pipe centerline, from the top of the rock to the bottom of the rock or the specified bottom of the trench, whichever has the higher elevation.

5. The Engineer must be given reasonable notice to measure all rock. Payment will not be made for excavated rock that was not measured and approved by the Engineer prior to removal.

6. No allowance shall be made for excavating to extra widths for construction of manholes or other appurtenances, for excavating to sloping sides, or for excavations made necessary by the physical limitations of the Contractor's equipment. Cost of such additional rock excavation shall be included in the unit price bid for the item to which it pertains.

7. Payment for blasting monitoring shall be made from the BLASTING MONITORING cash allowance. A fee must be agreed upon by the Engineer prior to the Contractor employing an independent, qualified specialty subcontractor to monitor the blasting. If the Contractor employs the specialty subcontractor prior to the Engineer's approval of the fee, all such costs are subject to non reimbursement.

H. Initial Backfill

1. No separate payment shall be made for initial backfill.

2. No separate payment shall be made for drying out the initial backfill material in order to meet the compaction requirements.

3. No separate payment shall be made for the adding of moisture to the initial backfill materials in order to meet the compaction requirements.

4. No separate payment shall be made for providing select material if the insitu material cannot meet the compaction requirements.

I. Concrete Encasement: Payment for concrete encasement shall be at the unit price bid for CONCRETE ENCASEMENT.

J. Final Backfilling

1. No additional payment will be made for additional material when excavated materials are used.

2. No separate payment shall be made for drying out the final backfill material in order to meet the compaction requirements.

3. No separate payment shall be made for the adding of moisture to the final backfill materials in order to meet the compaction requirements.

4. No additional payment will be made for providing select material if the insitu material cannot meet the compaction requirements.

K. Additional Material: No separate payment will be made for additional earth or fill materials imported to the Project site.

1.18 Easement Clearing and Grubbing

A. The unit price bid for EASEMENT CLEARING AND GRUBBING shall include all costs associated with clearing a 20-foot wide easement of the specified type, as approved by the Engineer prior to clearing, including but not limited to removal and disposal of trees, stumps, roots, undergrowth, debris, or other objectionable matter.

B. LIGHT CLEARING shall be defined by an easement that is dense with shrubs, brush, and trees up to one foot in diameter.

C. MEDIUM CLEARING shall be defined by an easement that is dense with shrubs, brush, and trees averaging one to two feet in diameter.

D. HEAVY CLEARING shall be defined by an easement that is dense with shrubs, brush, and trees averaging over two feet in diameter, including specimen trees.

E. The cost of moving and reestablishing landscape features, including labor and materials, shall be included in the unit price bid for the item to which it pertains.

F. No payment will be made for clearing and grubbing in grassed areas and in areas with non-established vegetation. The costs associated with such clearing shall be included in the unit price bid for the item to which it pertains.

1.19 Driveway and Road Repair and Replacement

A. General:

1. Payment for removing and replacing driveway and road asphalt and concrete pavement will be made based on the measured quantity replaced at the unit price Bid. The unit price bid shall include all costs associated with cutting, removing, disposing of existing pavement, replacing and compaction of base, subbase, concrete, asphalt, and all related items as required, including providing select backfill if necessary, all traffic control and temporary measures for maintaining traffic.

2. Payment shall be made only for that length for which the pipeline is constructed underneath or within four feet of the edge of the pavement to a width as shown in the Standard Details and Specifications.

3. Payment for soils testing shall be made from the SOILS, CONCRETE, ASPHALT, AND MATERIALS TESTING cash allowance. No payment shall be made for tests that fail to verify required results.

4. No additional payment will be made for removing and replacing damaged adjacent pavement.

5. No additional payment will be made for saw cutting of driveways or curbs.

B. Payment for removing and replacing gravel driveways will be made based on the measured quantity replaced at the unit price Bid for GRAVEL DRIVEWAY. The unit price bid shall include all costs associated with removing, replacing, and compacting a minimum of four-inches of GAB or #57 stone, and all related items as required for a complete driveway repair, including all traffic control and temporary measures for maintaining access. Payment will be made for the length for which the pipeline is constructed underneath the driveway and for the width as limited by the Standard Details and Specifications.

C. Payment for removing and replacing asphalt driveways will be made based on the measured quantity replaced at the unit price Bid for ASPHALT DRIVEWAY. The unit price bid shall include all costs associated with cutting, removing existing pavement, disposing of removed materials, compacting and placing a minimum of four inches of GAB and one and a half inches of Type E asphalt, and all related items as required for a complete driveway repair, including all traffic control and temporary measures for maintaining access. Payment will be made for the length for which the pipeline is constructed underneath the driveway and for the width as limited by the Standard Details and Specifications.

D. Payment for removing and replacing asphalt driveways will be made based on the measured quantity replaced at the unit price Bid for CONCRETE DRIVEWAY - RESIDENTIAL. The unit price bid shall include all costs associated with cutting, removing existing concrete, disposing of removed materials, compacting sub base, and placing a minimum of four inches concrete with reinforcing steel, and all related items as required for a complete driveway repair, including all traffic control and temporary measures for maintaining access. Payment will be made for the length for which the pipeline is constructed underneath the driveway and for the width to the nearest construction joint on either side of the new pipeline.

E. Payment for removing and replacing asphalt driveways will be made based on the measured quantity replaced at the unit price Bid for CONCRETE DRIVEWAY - COMMERCIAL. The unit price bid shall include all costs associated with cutting, removing existing concrete, disposing of removed materials, compacting sub base, and placing a minimum of six inches concrete with reinforcing steel, and all related items as required for a complete driveway repair, including all traffic control and temporary measures for maintaining access. Payment will be made for the length for which the pipeline is constructed underneath the driveway and for the width to the nearest construction joint on either side of the new pipeline.

F. Payment for removal and replacement of sidewalk shall be made at the unit price bid for CONCRETE SIDEWALK. No payment for sidewalk shall be made where the centerline of the new pipe is more than 5-feet from the closest edge of the sidewalk.

G. Payment for removal and replacement of curb and gutter shall be made at the unit prices bid for CONCRETE CURB AND GUTTER or for GRANITE CURB as appropriate. No payment for curb and gutter shall be made where the centerline of the new pipe is more than 5-feet from the closest edge of the curb and gutter.

H. Payment for removal and replacement of asphalt pavement (Type A Cut Repair), where the Fulton County Standard Utility Cut (Type C Cut Repair) is not required, shall be made at the unit price bid for ASPHALT PAVEMENT REMOVAL AND REPLACEMENT. The unit price bid shall include all costs associated with a Type A Cut Repair, including cutting, removing existing pavement, disposing of removed materials, compacting and placing a minimum of six inches of crusher run and one and a half inches of Type E asphalt, and all related items as required for a complete repair, including all traffic control and temporary measures. Payment will be made for the length for which the pipeline is constructed underneath the roadway and for the width as limited by the Standard Details and Specifications, or as approved by the Engineer.

I. Payment for Fulton County Standard Utility Cut (Type C Cut Repair) shall be made at the unit price bid for COMPLETE FULTON COUNTY STANDARD UTILITY CUT. The unit price bid shall include all costs associated with cutting, removing existing pavement, disposing of removed materials, eight inch concrete cap, bituminous tack coat, and one and a half inches of Type E asphalt, and all related items as required for a complete repair, including all traffic control and temporary measures including road plates. Payment will be made for the length for which the pipeline is constructed underneath the roadway and for the width as limited by the Standard Details and Specifications, or as approved by the Engineer.

J. No separate or additional payment shall be made for temporary measures required to make the road or driveway surface passable, including backfilling the top of the trench temporarily with crusher run or granular material or placing a temporary asphalt topping.

K. Payment for milling shall be made at the unit price bid for ROAD SURFACE MILLING. The unit price bid shall include all costs associated with milling one and a half inches of existing pavement and disposing of all waste materials and all related items as required. Measurement shall be made based on actual area milled, as approved by the Engineer.

L. Payment for overlay shall be made at the unit price bid for ROAD SURFACE OVERLAY. The unit price bid shall include all costs associated with overlaying a road surface with a bituminous tack coat and a minimum of one and a half inches of Type E asphalt, and all related items as required. Measurement shall be made based on actual area overlaid, as approved by the Engineer.

1.20 Pavement Marking and Striping

The unit price bid for PAVEMENT MARKING AND STRIPING shall include all costs associated with applying standard DOT striping and paint as listed in the Bid and as ordered by the Engineer. All required materials, labor, tools, equipment, and traffic control shall be included in the unit price bid.

1.21 Traffic Control

A. All costs for providing traffic control in compliance with the Manual on Uniform Traffic Control Devices (MUTCD) and Georgia Department of Transportation (GDOT) specifications shall be included in the unit price bid for the item to which

it pertains. No additional payment will be made for complying with MUTCD or GDOT requirements.

B. Payment for TRAFFIC CONTROL as indicated in the Bid will be made only for additional traffic control devices as ordered by the Engineer.

C. The unit price bid for STANDARD DOT CONCRETE BARRIER shall include all costs for providing, installing and removing a standard DOT concrete barrier, as directed by the Engineer.

1. No excavation in or near roadways will be left open over night. Therefore, all concrete barriers will be required to be removed from the roadway and moved to a location where vehicular and pedestrian traffic are not obstructed. The cost of moving the barriers as such shall be included in the unit price bid.

2. Measurement for payment shall be made based on the actual linear footage of barrier installed, per day, approved by the engineer and serving the purpose for which it was intended. Payment will not be made for excess barriers stored by the Contractor in any location.

D. The unit price bid for MUTCD STANDARD SAFETY BARREL shall include all costs for providing, installing and removing a standard MUTCD safety barrel, as directed by the Engineer. Only safety barrels directed by the Engineer, in addition to those required by the MUTCD and GDOT, shall be paid for separately.

E. The unit price bid for POLICE CRUISER shall include all costs for providing a police cruiser for additional traffic control. Payment will be made for hours spent on site, which may be a portion of a standard work day. Payment will be made only for hours documented and approved by the Engineer.

F. The unit price bid for CERTIFIED FLAGMAN shall include all costs for providing a flagman for additional traffic control, as directed by the Engineer, in addition to the requirements of MUTCD and GDOT.

1. The flagman shall be certified and dedicated to maintaining and directing traffic flow. An individual who works part time as a flagman and part time as a laborer or acts in dual capacity will not be approved for payment under this item. Proof of certification may be required by the Engineer prior to acceptance for payment.

2. Payment will be made for hours spent on site performing dedicated flagman duties, which may be a portion of a standard work day. Payment will be made only for hours documented and approved by the Engineer.

G. The unit price bid for LIGHT PLANT shall include all costs for providing a light plant, including generator and lighting system, for night work, as directed by the Engineer.

H. The unit price bid for ELECTRONIC MESSAGE BOARD shall include all costs for providing an electronic message board, as directed by the Engineer.

1.22 Remove and Replace Existing Fence

The unit price bid for REMOVE AND REPLACE EXISTING FENCE shall include all costs associated with removing and replacing an existing fence of the type and material listed in the Bid, including disposing of waste materials, restoration of site to original condition, and all other associated work for a complete installation.

1.23 Cast in Place Concrete

A. Structural Concrete: The unit price bid for STRUCTURAL CONCRETE shall include all costs associated with placing concrete as directed by the Engineer including excavation, dewatering, formwork, placing of concrete, and all associated labor, tools, and materials. This item will not be utilized for concrete piers for stream crossings.

B. Reinforcing Steel: The unit price bid for REINFORCING STEEL shall include all costs associated with providing reinforcing steel for structural concrete, including providing steel as directed by the Engineer and all labor, tools, and materials required.

C. Concrete Thrust Collars: The unit price bid for CONCRETE THRUST COLLARS shall include all associated costs including high early strength concrete, reinforcing, forming and weld on collar or split retainer gland as directed by the Engineer. Measurement for payment shall be made at the unit price in the Bid for the quantity of installed concrete for the appropriate size pipe.

D. Payment for CONCRETE THRUST BLOCKING AND ENCASEMENT shall be made at the unit price bid for the measured quantity installed. The unit price bid shall include all associated costs including high early strength concrete, reinforcing, forming, and all related items. Limits shall be determined from dimensions shown on the Drawings for each size and type of fitting for which blocking is installed, or as directed by the Engineer. The Contractor shall bear all costs for quantities in excess of the scheduled amount, as may be required due to over excavation or other reasons.

D. The cost of services of the consulting soil and foundation engineer will be paid by the Contractor from the SOILS, CONCRETE, ASPHALT, AND MATERIALS TESTING cash allowance.

1.24 Programmable Electronic Marking Devices

The unit price bid for PROGRAMMABLE ELECTRONIC MARKING DEVICES shall include the cost of providing the marking devices including programmer/locator as specified, including programming the devices and placing them along the water line. The cost of excavation shall be included in the unit price bid for WATER MAIN or UTILITY LOCATION. Measurement for payment will be based on the quantity installed as directed by the Engineer.

1.25 Utility Location – Excavation and Backfill

A. Soft Dig Hydro Excavation: The unit price bid for SOFT DIG HYDRO EXCAVATION shall include all costs associated with locating the assigned utility, excavating to directly above the pipe, measuring the depth, diameter and type of the pipe, backfilling and compacting the hole up to two feet from existing grade

with soil, encoding a 3M ID marker device, installing the marker above the pipe at a depth of two feet, and backfilling with soil and dressing the disturbed area with like surrounding materials.

B. Where utility location is performed in roadways or sidewalks, other materials may be required for backfill. Select materials will be paid for at the unit prices bid for TRENCH STABILIZATION. Measurement for payment will be made on the actual quantity of material used for backfill of the hole where the marker ball is installed.

C. Exploratory Excavation: The unit price bid for EXPLORATORY EXCAVATION shall include all costs associated with excavation of an area by machine and by hand where necessary with the intent of locating a Fulton County utility as ordered by the Engineer, including all equipment, tools, and labor. The costs associated with removal and replacement of roadway, driveway, sidewalk, or curb and gutter shall be included under the appropriate pay item. Measurement for payment will be based on the actual amount of excavation required to locate a Fulton County utility, only when ordered by the Engineer prior to any excavation. This item shall not be used for standard locating of utilities as required to perform the work.

D. No payment will be made for excavation that does not locate the assigned utility, or where the marker ball is not installed directly above the pipe.

E. No separate or additional payment will be made for any special or unique method, means, techniques or equipment necessary for the Contractor's compliance with these Specifications, regulatory requirements, permits, laws or regulations which govern this Project.

1.26 Water Line Maintenance Sign

The unit price bid for WATER LINE MAINTENANCE SIGN shall include all costs associated with providing a water line maintenance sign as Specified and directed by the Engineer, including placing and removal of the sign.

1.27 Cash Allowances

A. General

1. The Contractor shall include in the Bid Total all allowances stated in the Contract Documents. These allowances shall cover the net cost of the services provided by a firm selected by the Owner. The Contractor's handling costs, labor, overhead, profit and other expenses contemplated for the original allowance shall be included in the items to which they pertain and not in allowances.

2. No payment will be made for nonproductive time on the part of testing personnel due to the Contractor's failure to properly coordinate testing activities with the work schedule or the Contractor's problems with maintaining equipment in good working condition. The Contractor shall make all necessary excavations and shall supply any samples of materials necessary for conducting compaction and density tests.

3. No payment shall be provided for services that fail to verify required results.

B. Should the net cost be more or less than the specified amount of the allowance, the Contract will be adjusted accordingly by change order. The amount of change order will not recognize any changes in handling costs at the site, labor, overhead, profit and other expenses caused by the adjustment to the allowance.

C. Documentation

1. Submit copies of the invoices with each periodic payment request from the firm providing the services.

2. Submit results of services provided which verify required results.

D. Schedule of Cash Allowances

1. Soils, Concrete, Asphalt, Materials, and Water Quality Testing: Allow the amount provided in the Bid for the services of a geotechnical engineering firm or testing laboratory to verify soils conditions including trench excavation and backfill, asphalt coring and density tests, testing of concrete cylinders for poured in place concrete, pipe materials, water quality and similar issues as directed by the Engineer. Services will be reimbursed at direct cost with no markup, Contractor must provide invoices for Owner approval.

2. Utility Conflict Resolution: Allow the amount specified in the Bid to resolve any unforeseen utility conflicts (including relocating and/or replacement) as directed and approved by the Engineer.

3. Large Tree Removal: Allow the amount specified in the Bid for the services of a **tree removal specialist** to remove individual trees as directed by the Engineer. Services will be reimbursed at direct cost plus 10%, Contractor must provide invoices for Owner approval.

4. Preblast Survey/Inspection and Blasting Monitoring: Allow the amount provided in the Bid for the services of an independent, qualified specialty subcontractor to monitor the blasting, when directed by the Engineer. Services will be reimbursed at direct cost with no markup, Contractor must provide invoices for Owner approval.

1.28 Emergency Services

A. The following labor and equipment are included in the Bid for when the County needs manpower or additional equipment to assist in making emergency repairs other than those specified above as unit price items. Hourly rate items below shall **NOT** apply when work is performed under non-emergency conditions. The Notice to Proceed for each project will indicate emergency or non-emergency project status.

B. The unit price bid for the following items shall include all costs for providing the specified personnel on an hourly basis as required by the Owner. Payment may be made for partial work days where applicable. All overhead and direct costs, including all mobilization costs, for providing the labor, equipment, tools, supplies associated shall be included. Separate payments for items not included shall be agreed to prior to providing such items. No payment will be made for additional

services provided without proper written notification to the Owner that the services being requested are additional.

1. Water Superintendent with Pickup Truck
2. Water Crew Truck - Fully Equipped with tools and repair parts including but not limited to pipe saw, wacker-packer, chain saw, and miscellaneous hand tools, including water foreman and three laborers.
3. Rubber Tired Front End Loader With Trailer and Operator
4. Rubber Tired Backhoe With Trailer and Operator
5. Excavator With Trailer and Operator
6. Trench Compactor With Operator
7. Mobile Air Compressor With Hoses and Air Tools (Jackhammer, Pavement Breaker, Clay Spade, etc.)

END OF SECTION

Part 1 General

1.01 Scope

A. Permits and Responsibilities: The Contractor shall, without additional expense to the Owner, be responsible for obtaining all necessary licenses and permits, including building permits, and for complying with any applicable federal, state, county and municipal laws, codes and regulations, in connection with the prosecution of the Work.

1. In addition, City Work Permits, Right of Way Encroachment permits, plumbing permits and similar type permits, and all appropriate licenses are the responsibility of the Contractor.

2. If land disturbance permits, DOT permits, or easements are required, they will be obtained by the County as part of the design process.

B. The Contractor shall take proper safety and health precautions to protect the Work, the workers, the public and the property of others.

C. The Contractor shall also be responsible for all materials delivered and work performed until completion and acceptance of the Work, except for any completed unit of construction thereof which may heretofore have been accepted.

END OF SECTION

Part 1 General

1.01 Description

A. Whenever reference is made to conforming to the standards of any technical society, organization, body, code or standard, it shall be construed to mean the latest standard, code, specification or tentative specification adopted and published at the time of advertisement for Bids. This shall include the furnishing of materials, testing of materials, fabrication and installation practices. In those cases where the Contractor's quality standards establish more stringent quality requirements, the more stringent requirement shall prevail. Such standards are made a part hereof to the extent which is indicated or intended.

B. The inclusion of an organization under one category does not preclude that organizations' standards from applying to another category.

C. In addition, all work shall comply with the applicable requirements of local codes, utilities and other authorities having jurisdiction.

D. All material and equipment, for which a UL Standard, an AGA or NSF approval or an ASME requirement is established, shall be so approved and labeled or stamped. The label or stamp shall be conspicuous and not covered, painted, or otherwise obscured from visual inspection.

E. The standards which apply to this Project are not necessarily restricted to those organizations which are listed in Article 1.02.

1.02 Standard Organizations

A. Piping and Valves

ACPA	American Concrete Pipe Association
ANSI	American National Standards Institute
API	American Petroleum Institute
ASME	American Society of Mechanical Engineers
AWWA	American Water Works Association
CISPI	Cast Iron Soil Pipe Institute
DIPRA	Ductile Iron Pipe Research Association
FCI	Fluid Controls Institute
MSS	Manufacturers Standardization Society
NCPI	National Clay Pipe Institute
NSF	National Sanitation Foundation
PPI	Plastic Pipe Institute
Uni Bell PVC Pipe Association	

B. Materials

AASHTO	American Association of State Highway and Transportation Officials
ANSI	American National Standards Institute
ASTM	American Society for Testing and Materials

C. Painting and Surface Preparation

NACE	National Association of Corrosion Engineers
SSPC	Steel Structures Painting Council

D. Electrical and Instrumentation

AEIC	Association of Edison Illuminating Companies
AIEE	American Institute of Electrical Engineers
EIA	Electronic Industries Association
ICEA	Insulated Cable Engineers Association
IEC	International Electrotechnical Commission
IEEE	Institute of Electrical and Electronic Engineers
IES	Illuminating Engineering Society
IPC	Institute of Printed Circuits
IPCEA	Insulated Power Cable Engineers Association
ISA	ISA – The Instrumentation, Systems, and Automation Society
NEC	National Electric Code
NEMA	National Electrical Manufacturers Association
NFPA	National Fire Protection Association
REA	Rural Electrification Administration
TIA	Telecommunications Industries Association
UL	Underwriter's Laboratories
VRCI	Variable Resistive Components Institute

E. Aluminum

AA	Aluminum Association
AAMA	American Architectural Manufacturers Association

F. Steel and Concrete

ACI	American Concrete Institute
AISC	American Institute of Steel Construction, Inc.
AISI	American Iron and Steel Institute
CRSI	Concrete Reinforcing Steel Institute
NRMA	National Ready Mix Association
PCA	Portland Cement Association
PCI	Prestressed Concrete Institute

G. Welding

ASME	American Society of Mechanical Engineers
AWS	American Welding Society

H. Government and Technical Organizations

AIA	American Institute of Architects
APHA	American Public Health Association
APWA	American Public Works Association
ASA	American Standards Association
ASAE	American Society of Agricultural Engineers
ASCE	American Society of Civil Engineers
ASQC	American Society of Quality Control
ASSE	American Society of Sanitary Engineers
CFR	Code of Federal Regulations
CSI	Construction Specifications Institute
EDA	Economic Development Administration
EPA	Environmental Protection Agency
FCC	Federal Communications Commission
FmHA	Farmers Home Administration

FS	Federal Specifications
IAI	International Association of Identification
ISEA	Industrial Safety Equipment Association
ISO	International Organization for Standardization
ITE	Institute of Traffic Engineers
NBFU	National Board of Fire Underwriters
(NFPA)	National Fluid Power Association
NBS	National Bureau of Standards
NISO	National Information Standards Organization
OSHA	Occupational Safety and Health Administration
SI	Salt Institute
SPI	The Society of the Plastics Industry, Inc.
USDC	United States Department of Commerce
WEF	Water Environment Federation

I. General Building Construction

AHA	American Hardboard Association
AHAM	Association of Home Appliance Manufacturers
AITC	American Institute of Timber Construction
APA	American Parquet Association, Inc.
APA	American Plywood Association
BHMA	Builders Hardware Manufacturers Association
BIFMA	Business and Institutional Furniture Manufacturers Association
DHI	Door and Hardware Institute
FM	Factory Mutual Fire Insurance Company
HPMA	Hardwood Plywood Manufacturers Association
HTI	Hand Tools Institute
IME	Institute of Makers of Explosives
ISANTA	International Staple, Nail and Tool Association
ISDSI	Insulated Steel Door Systems Institute
IWS	Insect Screening Weavers Association
MBMA	Metal Building Manufacturers Association
NAAMM	National Association of Architectural Metal Manufacturers
NAGDM	National Association of Garage Door Manufacturers
NCCLS	National Committee for Clinical Laboratory Standards
NFPA	National Fire Protection Association
NFSA	National Fertilizer Solutions Association
NKCA	National Kitchen Cabinet Association
NWMA	National Woodwork Manufacturers Association
NWWDA	National Wood Window and Door Association
RMA	Rubber Manufacturers Association
SBC	SBCC Standard Building Code
SDI	Steel Door Institute
SIA	Scaffold Industry Association
SMA	Screen Manufacturers Association
SPRI	Single Ply Roofing Institute
TCA	Tile Council of America
UBC	Uniform Building Code

J. Roadways

AREA	American Railway Engineering Association
DOT	Department of Transportation
SSRBC	Standard Specifications for Construction of Transportation Systems, Georgia Department of Transportation

K. Plumbing

AGA	American Gas Association
NSF	National Sanitation Foundation
PDI	Plumbing Drainage Institute
SPC	SBCC Standard Plumbing Code

L. Refrigeration, Heating, and Air Conditioning

AMCA	Air Movement and Control Association
ARI	American Refrigeration Institute
ASHRAE	American Society of Heating, Refrigeration, and Air Conditioning Engineers
ASME	American Society of Mechanical Engineers
CGA	Compressed Gas Association
CTI	Cooling Tower Institute
HEI	Heat Exchange Institute
IIAR	International Institute of Ammonia Refrigeration
NB	National Board of Boilers and Pressure Vessel Inspectors
PFMA	Power Fan Manufacturers Association
SAE	Society of Automotive Engineers
SMACNA	Sheet Metal and Air Conditioning Contractors National Association
SMC	SBCC Standard Mechanical Code
TEMA	Tubular Exchangers Manufacturers Association

M. Equipment

AFBMA	Anti Friction Bearing Manufacturers Association, Inc.
AGMA	American Gear Manufacturers Association
ALI	Automotive Lift Institute
CEMA	Conveyor Equipment Manufacturers Association
CMAA	Crane Manufacturers Association of America
DEMA	Diesel Engine Manufacturers Association
MMA	Monorail Manufacturers Association
OPEI	Outdoor Power Equipment Institute, Inc.
PTI	Power Tool Institute, Inc.
RIA	Robotic Industries Association
SAMA	Scientific Apparatus Makers Association

1.03 Symbols

Symbols and material legends shall be as scheduled on the Drawings.

END OF SECTION

Part 1 General

1.01 Scope

A. Work under this Section includes all scheduling and administering of pre construction and progress meetings as herein specified and necessary for the proper and complete performance of this Work.

B. Scheduling and Administration by Engineer:

1. Prepare agenda.
2. Make physical arrangements for the meetings.
3. Preside at meetings.
4. Record minutes and include significant proceedings and decisions.
5. Distribute copies of the minutes to participants.

1.02 Preconstruction Conference

A. The Engineer shall schedule the preconstruction conference prior to the issuance of the Notice to Proceed.

B. Representatives of the following parties are to be in attendance at the meeting:

1. Owner.
2. Engineer.
3. Contractor and superintendent.
4. Major subcontractors.
5. Representatives of governmental or regulatory agencies when appropriate.

C. The agenda for the preconstruction conference shall consist of the following as a minimum:

1. Distribute and discuss a list of major subcontractors and a tentative construction schedule.
2. Critical work sequencing.
3. Designation of responsible personnel and emergency telephone numbers.
4. Processing of field decisions and change orders.
5. Adequacy of distribution of Contract Documents.
6. Schedule and submittal of shop drawings, product data and samples.
7. Pay request format, submittal cutoff date, pay date and retain age.

8. Procedures for maintaining record documents.

9. Use of premises, including office and storage areas and Owner's requirements.

10. Major equipment deliveries and priorities.

11. Safety and first aid procedures.

12. Security procedures.

13. Housekeeping procedures.

14. Work hours.

1.03 Project Coordination Meetings

Project Coordination Meetings may be requested at any time at the discretion of the Owner, Engineer or Contractor. The party requesting a meeting shall provide the other two parties with as much notice as possible, as well as a written agenda for such meeting.

END OF SECTION

Part 1 General

1.01 Scope

A. The work covered by this Section includes the Engineer's and Contractor's responsibilities and obligations regarding inspection of the work performed.

1.02 Engineer's Inspection

A. The Engineer shall have the right of access to and inspection of the work at all times. Materials, equipment and products shall be subject to the Engineer's review as specified herein.

B. The Engineer is responsible for general surveillance of the work on behalf of the Owner. The Engineer is not responsible for construction means, methods, sequences, or procedures or for safety precautions and programs in connection with the work. The Engineer is not responsible for supervision of the work and shall not give instruction to the Contractor's personnel as to methods of execution of the work. The Engineer is not responsible for the Contractor's failure to carry out the work in accordance with the Contract Documents.

1.03 Contractor's Duties

A. The Contractor is responsible for all materials, equipment, methods, and procedures in execution of the work.

B. The Contractor shall correct to the satisfaction of the Engineer any work or material found to be defective or of deficient quality. Such corrections shall be made by the Contractor at no additional expense to the Owner.

1.04 Right of Entry

A. Representatives of Fulton County, the Environmental Protection Division of the Georgia Department of Natural Resources, and the U.S. Department of Agriculture, Soil Conservation Services and others as may be identified by the Owner shall have access to the work wherever it is in preparation or progress. The Contractor shall provide proper facilities for such access and inspection.

Part 2 Products (Not Used)

Part 3 Execution(Not Used)

END OF SECTION

Part 1 General

1.01 Scope

A. The Contractor shall furnish all equipment and labor materials required to provide the Owner with digital construction photographs of the Project. Photographs shall be provided on a compact disk.

B. Photo and video files shall become the property of the Owner and none of the photographs herein shall be published without express permission of the Owner.

1.02 Pre and Post Construction Photographs

A. Prior to the beginning of any work, the Contractor shall take project photographs of the work area to record existing conditions.

B. Following completion of the work, photos shall be made showing the same areas and features as in the pre construction photographs.

C. All conditions which might later be subject to disagreement shall be shown in sufficient detail to provide a basis for decisions.

D. The pre construction photographs shall be submitted to the Engineer within 25 calendar days after the date of receipt by the Contractor of Notice to Proceed. Post construction photographs shall be provided prior to final acceptance of the project.

1.03 Progress Photographs and Submittals

A. Progress photograph files shall be provided on compact discs as well as hard copies.

B. The file name of each photograph shall at a minimum contain the date the photograph was taken. All photographs shall be labeled to indicate date, time taken, and description of work shown.

C. A minimum of 10 photographs shall be submitted with each request for payment. The view selection will be as agreed to with the Engineer. One copy of each photograph shall be submitted. Failure to include photographs may be cause for rejection of the payment request.

END OF SECTION

Part 1 General

1.01 Scope

A. The work under this Section includes submittal to the Engineer of shop drawings, product data and samples required by the various sections of these Specifications.

B. Submittal Contents: The submittal contents required are specified in each section.

C. Definitions: Submittals are categorized as follows:

1. Shop Drawings

a. Shop drawings shall include technical data, drawings, diagrams, procedure and methodology, performance curves, schedules, templates, patterns, test reports, calculations, instructions, measurements and similar information as applicable to the specific item for which the shop drawing is prepared.

b. Provide newly prepared information, on reproducible sheets, with graphic information at accurate scale (except as otherwise indicated) or appropriate number of prints hereof, with name or preparer (firm name) indicated. The Contract Drawings shall not be traced or reproduced by any method for use as or in lieu of detail shop drawings. Show dimensions and note dimensions that are based on field measurement. Identify materials and products in the work shown. Indicate compliance with standards and special coordination requirements. Do not allow shop drawings to be used in connection with the Work without appropriate final “Action” markings by the Engineer.

c. Drawings shall be presented in a clear and thorough manner. Details shall be identified by reference to sheet and detail, specification section, schedule or room numbers shown on the Contract Drawings.

d. Minimum assembly drawings sheet size shall be 24 x 36 inches.

e. Minimum detail sheet size shall be 8 1/2 x 11 inches.

f. Minimum Scale:

i. Assembly Drawings Sheet, Scale: 1 inch = 30 feet.

ii. Detail Sheet, Scale: 1/4 inch = 1 foot.

2. Product Data

a. Product data includes standard printed information on materials, products and systems, not specially prepared for this Project, other than the designation of selections from among available choices printed therein.

b. Collect required data into one submittal for each unit of work or system, and mark each copy to show which choices and options

are applicable to the Project. Include manufacturer's standard printed recommendations for application and use, compliance with standards, application of labels and seals, notation of field measurements which have been checked and special coordination requirements.

3. Samples

a. Samples include both fabricated and un fabricated physical examples of materials, products and units of work, both as complete units and as smaller portions of units of work, either for limited visual inspection or, where indicated, for more detailed testing and analysis.

b. Provide units identical with final condition of proposed materials or products for the work. Include “range” samples, not less than three units, where unavoidable variations must be expected, and describe or identify variations between units of each set. Provide full set of optional samples where the Engineer's selection is required. Prepare samples to match the Engineer's sample where indicated. Include information with each sample to show generic description, source or product name and manufacturer, limitations and compliance with standards. Samples are submitted for review and confirmation of color, pattern, texture and “kind” by the Engineer. Engineer will note “test” samples, except as otherwise indicated, for other requirements, which are the exclusive responsibility of the Contractor.

4. Miscellaneous submittals related directly to the Work (non administrative) warranties, maintenance agreements, workmanship bonds, project photographs, survey data and reports, physical work records, statements of applicability, quality testing and certifying reports, copies of industry standards, record drawings, field measurement data, operating and maintenance materials, overrun stock, security/protection/safety keys and similar information, devices and materials applicable to the Work but not processed as shop drawings, product data or samples.

1.02 Specific Category Requirements

A. General: Except as otherwise indicated in the individual work sections, comply with general requirements specified herein for each indicated category of submittal. Submittals shall contain:

1. The date of submittal and the dates of any previous submittals.

2. The Project title.

3. Numerical submittal numbers, starting with 1.0, 2.0, etc. Revisions to be numbered 1.1, 1.2, etc.

4. The Names of:

a. Contractor

b. Supplier

c. Manufacturer

5. Identification of the product, with the Specification section number, permanent equipment tag numbers and applicable Drawing No.

6. Field dimensions, clearly identified as such.

7. Relation to adjacent or critical features of the Work or materials.

8. Applicable standards, such as ASTM or Federal Specification numbers.

9. Notification to the Engineer in writing, at time of submissions, of any deviations on the submittals from requirements of the Contract Documents.

10. Identification of revisions on resubmittals.

11. An 8 x 3 inch blank space for Contractor and Engineer stamps.

12. Contractor's stamp, initialed or signed, certifying to review of submittal, verification of products, field measurements and field construction criteria and coordination of the information within the submittal with requirements of the Work and of Contract Documents.

13. Submittal sheets or drawings showing more than the particular item under consideration shall have all but the pertinent description of the item for which review is requested crossed out.

1.03 Routing of Submittals

A. Submittals and routine correspondence shall be routed as follows:

1. Supplier to Contractor (through representative if applicable)
2. Contractor to Engineer
3. Engineer to Contractor and Owner
4. Contractor to Supplier

Part 2 Products

2.01 Shop Drawings

A. Unless otherwise specifically directed by the Engineer, make all shop drawings accurately to a scale sufficiently large to show all pertinent features of the item and its method of connection to the Work.

B. Submit all shop drawings in the form of six hard copies and one pdf file.

C. One reproducible for all submittals larger than 11 x 17 inches and no more than three prints of other submittals will be returned to the Contractor.

2.02 Manufacturer's Literature

A. Where content of submitted literature from manufacturers includes data not pertinent to this submittal, clearly indicate which portion of the contents is being submitted for the Engineer's review.

B. Submit the number of copies which are required to be returned (not to exceed three) plus three copies which will be retained by the Engineer.

2.03 Samples

A. Samples shall illustrate materials, equipment or workmanship and established standards by which completed work is judged.

B. Unless otherwise specifically directed by the Engineer, all samples shall be of the precise article proposed to be furnished.

C. Submit all samples in the quantity which is required to be returned plus one sample which will be retained by the Engineer.

2.04 Colors

A. Unless the precise color and pattern is specifically described in the Contract Documents, wherever a choice of color or pattern is available in a specified product, submit accurate color charts and pattern charts to the Engineer for review and selection.

B. Unless all available colors and patterns have identical costs and identical wearing capabilities, and are identically suited to the installation, completely describe the relative costs and capabilities of each.

Part 3 Execution

3.01 Contractor's Coordination of Submittals

A. Prior to submittal for the Engineer's review, the Contractor shall use all means necessary to fully coordinate all material, including the following procedures:

1. Determine and verify all field dimensions and conditions, catalog numbers and similar data.

2. Coordinate as required with all trades and all public agencies involved.

3. Submit a written statement of review and compliance with the requirements of all applicable technical Specifications as well as the requirements of this Section.

4. Clearly indicate in a letter or memorandum on the manufacturer's or fabricator's letterhead, all deviations from the Contract Documents.

B. Each and every copy of the shop drawings and data shall bear the Contractor's stamp showing that they have been so checked. Shop drawings submitted to the Engineer without the Contractor's stamp will be returned to the Contractor for conformance with this requirement.

C. The Owner may back charge the Contractor for costs associated with having to review a particular shop drawing, product data or sample more than two times to receive a “No Exceptions Taken” mark.

D. Grouping of Submittals

1. Unless otherwise specifically permitted by the Engineer, make all submittals in groups containing all associated items.

2. No review will be given to partial submittals of shop drawings for items which interconnect and/or are interdependent. It is the Contractor's responsibility to assemble the shop drawings for all such interconnecting and/or interdependent items, check them and then make one submittal to the Engineer along with Contractor's comments as to compliance, non compliance or features requiring special attention.

E. Schedule of Submittals

1. Within 30 days of Contract award and prior to any shop drawing submittal, the Contractor shall submit a schedule showing the estimated date of submittal and the desired approval date for each shop drawing anticipated. A reasonable period shall be scheduled for review and comments. Time lost due to unacceptable submittals shall be the Contractor's responsibility and some time allowance for resubmittal shall be provided. The schedule shall provide for submittal of items which relate to one another to be submitted concurrently.

3.02 Timing of Submittals

A. Make all submittals far enough in advance of scheduled dates for installation to provide all required time for reviews, for securing necessary approvals, for possible revision and resubmittal, and for placing orders and securing delivery.

B. In scheduling, allow sufficient time for the Engineer's review following the receipt of the submittal.

3.03 Reviewed Shop Drawings

A. Engineer Review

1. Allow a minimum of 30 days for the Engineer's initial processing of each submittal requiring review and response, except allow longer periods where processing must be delayed for coordination with subsequent submittals. The Engineer will advise the Contractor promptly when it is determined that a submittal being processed must be delayed for coordination. Allow a minimum of two weeks for reprocessing each submittal. Advise the Engineer on each submittal as to whether processing time is critical to progress of the Work, and therefore the Work would be expedited if processing time could be foreshortened.

2. Acceptable submittals will be marked “No Exceptions Taken”. A minimum of three copies will be retained by the Engineer for Engineer's and the Owner's use and the remaining copies will be returned to the Contractor.

3. Submittals requiring minor corrections before the product is acceptable will be marked “Make Corrections Noted”. The Contractor may order, fabricate and ship the items included in the submittals, provided the indicated corrections are made. Drawings must be resubmitted for review and marked “No Exceptions Taken” prior to installation or use of products.

4. Submittals marked “Amend and Resubmit” must be revised to reflect required changes and the initial review procedure repeated.

5. The “Rejected See Remarks” notation is used to indicate products which are not acceptable. Upon return of a submittal so marked, the Contractor shall repeat the initial review procedure utilizing acceptable products.

6. Only two copies of items marked “Amend and Resubmit” and “Rejected See Remarks” will be reviewed and marked. One copy will be retained by the Engineer and the other copy with all remaining unmarked copies will be returned to the Contractor for resubmittal.

B. No work or products shall be installed without a drawing or submittal bearing the “No Exceptions Taken” notation. The Contractor shall maintain at the job site a complete set of shop drawings bearing the Engineer's stamp.

C. Substitutions: In the event the Contractor obtains the Engineer's approval for the use of products other than those which are listed first in the Contract Documents, the Contractor shall, at the Contractor's own expense and using methods approved by the Engineer, make any changes to structures, piping and electrical work that may be necessary to accommodate these products.

D. Use of the “No Exceptions Taken” notation on shop drawings or other submittals is general and shall not relieve the Contractor of the responsibility of furnishing products of the proper dimension, size, quality, quantity, materials and all performance characteristics, to efficiently perform the requirements and intent of the Contract Documents. The Engineer's review shall not relieve the Contractor of responsibility for errors of any kind on the shop drawings. Review is intended only to assure conformance with the design concept of the Project and compliance with the information given in the Contract Documents. The Contractor is responsible for dimensions to be confirmed and correlated at the job site. The Contractor is also responsible for information that pertains solely to the fabrication processes or to the technique of construction and for the coordination of the work of all trades.

3.04 Resubmission Requirements

A. Shop Drawings

1. Revise initial drawings as required and resubmit as specified for initial submittal, with the resubmittal number shown.

2. Indicate on drawings all changes which have been made other than those requested by the Engineer.

B. Project Data and Samples: Resubmit new data and samples as specified for initial submittal, with the resubmittal number shown.

END OF SECTION

Part 1 General

1.01 Scope

A. This Section includes testing which the Owner may require, beyond that testing required of the manufacturer, to determine if materials provided for the Project meet the requirements of these Specifications.

B. This work also includes all testing required by the Owner to verify work performed by the Contractor is in accordance with the requirements of these Specifications, i.e., concrete strength and slump testing, soil compaction, etc.

C. This work does not include materials testing required in various sections of these Specifications to be performed by the manufacturer, e.g., testing of pipe.

D. The testing laboratory or laboratories will be selected by the Owner. The testing laboratory or laboratories will work for the Owner.

1.02 Payment for Testing Services

A. The cost of testing services required by the Contract to be provided by the Contractor shall be paid for by the Owner through the CASH ALLOWANCE, i.e., concrete testing, soil compaction, and asphalt testing.

B. The cost of additional testing services not specifically required in the Specifications, but requested by the Owner or Engineer, shall be paid for by the Owner through the CASH ALLOWANCE.

C. The cost of material testing described in various sections of these Specifications or as required in referenced standards to be provided by a material manufacturer, shall be included in the price bid for that item and shall not be paid for by the Owner.

D. The cost of retesting any item that fails to meet the requirements of these Specifications shall be paid for by the Contractor. Retesting shall be performed by the testing laboratory working for the Owner.

1.03 Laboratory Duties

A. Cooperate with the Owner, Engineer and Contractor.

B. Provide qualified personnel promptly on notice.

C. Perform specified inspections, sampling and testing of materials.

1. Comply with specified standards, ASTM, other recognized authorities, and as specified.

2. Ascertain compliance with requirements of the Contract Documents.

D. Promptly notify the Engineer and Contractor of irregularity or deficiency of work which are observed during performance of services.

E. Promptly submit three copies (two copies to the Engineer and one copy to the Contractor) of report of inspections and tests in addition to those additional copies required by the Contractor with the following information included:

1. Date issued
2. Project title and number
3. Testing laboratory name and address
4. Name and signature of inspector
5. Date of inspection or sampling
6. Record of temperature and weather
7. Date of test
8. Identification of product and Specification section
9. Location of Project
10. Type of inspection or test
11. Results of test
12. Observations regarding compliance with the Contract Documents

F. Perform additional services as required.

G. The laboratory is not authorized to release, revoke, alter or enlarge on requirements of the Contract Documents, or approve or accept any portion of the Work.

1.04 Contractor Responsibilities

A. Cooperate with laboratory personnel, provide access to Work and/or manufacturer's requirements.

B. Provide to the laboratory, representative samples, in required quantities, of materials to be tested.

C. Furnish copies of mill test reports.

D. Furnish required labor and facilities to:

1. Provide access to Work to be tested;
2. Obtain and handle samples at the site;
3. Facilitate inspections and tests;
4. Build or furnish a holding box for concrete cylinders or other samples as required by the laboratory.

E. Notify the laboratory sufficiently in advance of operation to allow for the assignment of personnel and schedules of tests.

F. Laboratory Tests: Where such inspection and testing are to be conducted by an independent laboratory agency, the sample(s) shall be selected by such

laboratory or agency, or the Engineer, and shipped to the laboratory by the Contractor at Contractor's expense.

G. Copies of all correspondence between the Contractor and testing agencies shall be provided to the Engineer.

1.05 Quality Assurance

Testing shall be in accordance with all pertinent codes and regulations and with procedures and requirements of the American Society for Testing and Materials (ASTM).

1.06 Product Handling

Promptly process and distribute all required copies of test reports and related instructions to insure all necessary retesting or replacement of materials with the least possible delay in the progress of the Work.

1.07 Furnishing Materials

The Contractor shall be responsible for furnishing all materials necessary for testing.

1.08 Code Compliance Testing

Inspections and tests required by codes or ordinances or by a plan approval authority, and made by a legally constituted authority, shall be the responsibility of, and shall be paid for by the Contractor, unless otherwise provided in the Contract Documents.

1.09 Contractor's Convenience Testing

Inspection or testing performed exclusively for the Contractor's convenience shall be the sole responsibility of the Contractor.

1.10 Schedules for Testing

A. Establishing Schedule

1. The Contractor shall, by advance discussion with the testing laboratory selected by the Owner, determine the time required for the laboratory to perform its tests and to issue each of its findings, and make all arrangements for the testing laboratory to be on site to provide the required testing.

2. Provide all required time within the construction schedule.

B. When changes of construction schedule are necessary during construction, coordinate all such changes of schedule with the testing laboratory as required.

C. When the testing laboratory is ready to test according to the determined schedule, but is prevented from testing or taking specimens due to incompleteness of the Work, all extra costs for testing attributable to the delay will be back charged to the Contractor and shall not be borne by the Owner.

1.11 Taking Specimens

Unless otherwise provided in the Contract Documents, all specimens and samples for tests will be taken by the testing laboratory or the Engineer.

1.12 Transporting Samples

The Contractor shall be responsible for transporting all samples, except those taken by testing laboratory personnel, to the testing laboratory.

END OF SECTION

Part 1 General

1.01 Scope

A. Temporary facilities required for this work include, but are not necessarily limited to:

1. Temporary utilities such as water and electricity.

2. First aid facilities.

3. Sanitary facilities.

4. Potable water.

5. Temporary enclosures and construction facilities.

1.02 General

A. First aid facilities, sanitary facilities and potable water shall be available on the Project site on the first day that any activities are conducted on site. The other facilities shall be provided as the schedule of the Project warrants.

B. Maintenance: Use all means necessary to maintain temporary facilities in proper and safe condition throughout progress of the Work. In the event of loss or damage, immediately make all repairs and replacements necessary, at no additional cost to the Owner.

C. Removal: Remove all such temporary facilities and controls as rapidly as progress of the Work will permit.

1.03 Temporary Utilities

A. General

1. Provide and pay all costs for all water, electricity and other utilities required for the performance of the Work.

2. Pay all costs for temporary utilities until Project completion.

3. Costs for temporary utilities shall include all power, water and the like necessary for testing equipment as required by the Contract Documents.

B. Temporary Water: Provide all necessary temporary piping, and upon completion of the Work, remove all such temporary piping. Provide and remove water meters.

C. Temporary Electricity

1. Provide all necessary wiring for the Contractor's use.

2. Furnish, locate and install area distribution boxes such that the individual trades may use, their own construction type extension cords to obtain adequate power, and artificial lighting at all points where required by inspectors and for safety.

1.04 First Aid Facilities

The Contractor shall provide a suitable first aid station, equipped with all facilities and medical supplies necessary to administer emergency first aid treatment. The Contractor shall have standing arrangements for the removal and hospital treatment of any injured person. All first aid facilities and emergency ambulance service shall be made available by the Contractor to the Owner and the Engineer's personnel.

1.05 Sanitary Facilities

Prior to starting the Work, the Contractor shall furnish, for use of Contractor's personnel on the job, all necessary toilet facilities which shall be secluded from public observation. These facilities shall be either chemical toilets or shall be connected to the Owner's sanitary sewer system. All facilities, regardless of type, shall be kept in a clean and sanitary condition and shall comply with the requirements and regulations of the area in which the Work is performed. Adequacy of these facilities will be subject to the Engineer's review and maintenance of same must be satisfactory to the Engineer at all times.

1.06 Potable Water

The Contractor shall be responsible for furnishing a supply of potable drinking water for employees, subcontractors, inspectors, engineers and the Owner who are associated with the Work.

1.07 Enclosures and Construction Facilities

Furnish, install and maintain for the duration of construction, all required storage, scaffolds, tarpaulins, canopies, steps, bridges, platforms and other temporary construction necessary for proper completion of the Work in compliance with all pertinent safety and other regulations.

1.08 Parking Facilities

Parking facilities for the Contractor's and Contractor's subcontractors' personnel shall be the Contractor's responsibility. The storage and work facilities provided by the Owner will not be used for parking by the Contractor's or subcontractor's personnel.

END OF SECTION

Part 1 General

1.01 Barricades, Lights and Signals

A. The Contractor shall furnish and erect such barricades, fences, lights and danger signals and shall provide such other precautionary measures for the protection of persons or property and of the Work as necessary. Barricades shall be painted in a color that will be visible at night. From sunset to sunrise, the Contractor shall furnish and maintain at least one light at each barricade and sufficient numbers of barricades shall be erected to keep vehicles from being driven on or into any Work under construction.

B. The Contractor will be held responsible for all damage to the Work due to failure of barricades, signs and lights and whenever evidence is found of such damage, the Contractor shall immediately remove the damaged portion and replace it at Contractor's cost and expense. The Contractor's responsibility for the maintenance of barricades, signs and lights shall not cease until the Project has been accepted by the Owner.

END OF SECTION

Part 1 General

1.01 Scope

Limit blowing dust caused by construction operations by applying water or employing other appropriate means or methods to maintain dust control, subject to the approval of the Owner. As a minimum, this may require the use of a water wagon twice a day to suppress dusty conditions.

1.02 Protection of Adjacent Property

A. The Contractor shall visit the site and note the buildings, landscaping, roads, parking areas and other facilities near the Work site that may be damaged by their operations. The Contractor shall make adequate provision to fully protect the surrounding area and will be held fully responsible for all damages resulting from Contractor's operations.

B. Protect all existing facilities (indoors or out) from damage by dust, fumes, spray or spills (indoors or out). Protect motors, bearings, electrical gear, instrumentation and building or other surfaces from dirt, dust, welding fumes, paint spray, spills or droppings causing wear, corrosion, malfunction, failure or defacement by enclosure, sprinkling or other dust palliatives, masking and covering, exhausting or containment.

END OF SECTION

Part 1 General

1.01 Scope

This Section outlines the restrictions and requirements for substitutions, product and manufacturer options, and construction method options.

1.02 Definitions

A. For the purposes of these Contract Documents, a “substitute item” shall be defined as one of the following:

1. A product or manufacturer offered as a replacement to a specified product or manufacturer.

2. A product or manufacturer offered in addition to a specified product or manufacturer.

B. For the purposes of these Contract Documents, a “substitute construction method” shall be defined as one of the following:

1. A mean, method, technique, sequence or procedure of construction offered as a replacement for a specified mean, method, technique, sequence or procedure of construction.

2. A mean, method, technique, sequence or procedure of construction offered in addition to a specified mean, method, technique, sequence or procedure of construction.

1.03 General

A. An item or construction method, which is offered where no specific product, manufacturer, mean, method, technique, sequence or procedure of construction is specified or shown on the Drawings, shall not be considered a substitute and shall be at the option of the Contractor, subject to the provisions in the Contract Documents for that item or construction method.

B. For products specified only by a referenced standard, the Contractor may select any product by any manufacturer, which meets the requirements of the Specifications, unless indicated otherwise in the Contract Documents.

C. If the manufacturer is named on the Drawings or in the Specifications as an acceptable manufacturer, products of that manufacturer meeting all requirements of the Specifications and Drawings are acceptable.

D. Whenever the Engineer's design is based on a specific product of a particular manufacturer, that manufacturer will be shown on the Drawings and/or listed first in the list of approved manufacturers in the Specifications. Any Bidder intending to furnish products of other than the first listed manufacturer, or furnish substitute items, shall

1. Verify that the item being furnished will fit in the space allowed, perform the same functions and have the same capabilities as the item specified.

2. Include in its Bid the cost of all accessory items which may be required by the other listed substitute product,

3. Include the cost of any architectural, structural, mechanical, piping, electrical or other modifications required, and

4. Include the cost of required additional work by the Engineer, if any, to accommodate the item.

E. Whenever a product is identified on the Drawings or in the Specifications by reference to manufacturers or vendors names, trade names, catalog numbers, etc., it is intended only to denote the quality standard of product desired and that they do not restrict Bidders to a specific brand, make, manufacturer or specific name. These listings and citations are used only to set forth and convey to Bidders the general style, type, character and quality of product desired. Equivalent products will be acceptable, subject to the substitution provisions of this Section.

1.04 Approvals

Approval, of a substitution as an acceptable manufacturer, of the Engineer is dependent on determination that the product offered is essentially equal in function, performance, quality of manufacture, ease of maintenance, reliability, service life and other criteria to that on which the design is based; and will require no major modifications to structures, electrical systems, control systems or piping systems.

1.05 Substitutions and Options

A. No substitutions will be considered for the manufacturers listed in the Bid Form.

B. After Notice to Proceed

1. Substitute items will be considered only if the term “equal to” precedes the names of acceptable manufacturers in the Specification.

2. Where items are specified by referenced standard or specified as indicated in Article 1.03, Paragraph A. above, such items shall be submitted to the Engineer for review.

3. The Contractor shall submit shop drawings on the substitute item for the Engineer's review in accordance with the Section 01340.

C. Prior to Opening of Bids

1. No consideration or approvals will be made for products specified by a referenced standard, or specified as indicated in Article 1.02, Paragraph A. above. Such consideration may occur only after the Notice to Proceed.

2. No consideration or approvals will be made for products being offered where the term “equal to” precedes the name of an approved product. Such substitution consideration may occur only after the Notice to Proceed.

3. If the term “or equal” follows the names of acceptable manufacturers, then other manufacturers desiring approval as an acceptable manufacturer may submit the product information to the Engineer for

approval during the bidding phase, as indicated below. With the exception of where the phrase “no substitutions” is associated with a list of manufacturers, where a list of acceptable manufacturers is not preceded by the phrase “equal to”, the list of acceptable manufacturers shall be considered as having the phrase “or equal” following the list, and the list being subject to the “or equal” provisions of this section.

4. The manufacturer shall include the following items in its “or equal” submittal:

   a. Descriptive literature including information on materials used, minimum design standards, standard design features, manufacturing processes and facilities, and similar information which will indicate experience and expertise in the manufacture of the product being evaluated.

   b. Performance specifications applicable to the manufacturer's standard design which indicates the level of performance to be expected from the product.

   c. A complete set of submittal drawings of similar products which have been completed and placed into operation.

   d. A list of existing installations of products similar in type and size, information required to satisfy specified experience requirements, or a copy of the bond to be submitted in lieu of experience.

   e. Evidence of technical ability of the manufacturer to design and manufacture products meeting Project requirements.

   f. Evidence submitted shall include, as a minimum, descriptions of engineering and manufacturing staff capabilities.

   g. A copy of the manufacturer's most recent annual business report. Include a statement comparing the present net worth of the manufacturer in comparison to the total value of all products proposed to be furnished. Net worth must exceed the total value of all products proposed.

   h. A complete description of field service capabilities, including the location of field service facilities which would serve the proposed facility and the number and qualifications of personnel working from that location.

   i. A complete list of all requirements of the Drawings and Specifications with which the manufacturer cannot conform, including reasons why alternate features are considered equivalent.

   j. If descriptive literature or drawings illustrate standard products with design features or materials not in compliance with Project requirements then these exceptions must be specifically listed. Failure to do so will indicate intent by the manufacturer to modify design features and alter materials to meet Project requirements.

k. Where additional information is submitted to supplement the submittal, all changes to the list of exceptions shall be specifically noted.

l. All other information necessary to fully evaluate the product for consideration.

5. This “or equal” submittal shall reach the Engineer no later than 14 days prior to the Bid date. Submittals which do not include a complete list of exceptions to Project requirements, or the statement “No exceptions to the Specifications will be taken”, will automatically be rejected by the Engineer. Manufacturers will be advised of approval or rejection in writing no later than 10 days prior to the Bid date. Rejected submittals may be supplemented with additional information and resubmitted no later than five days prior to the Bid date. Manufacturers making supplementary submittals will be advised of approval or rejection in writing no later than one day prior to the Bid date.

6. Bids based on products which have not received the approval of the Engineer may be determined non-responsive by the Owner and rejected.

END OF SECTION

Part 1 General

1.01 Scope

This Section covers the general cleaning which the Contractor shall be required to perform both during construction and before final acceptance of the Project unless otherwise shown on the Drawings or specified elsewhere in these Specifications.

1.02 Quality Assurance

A. Daily, and more often if necessary, conduct inspections verifying that requirements of cleanliness are being met.

B. In addition to the standards described in this Section, comply with all pertinent requirements of governmental agencies having jurisdiction.

1.03 Hazardous Material and Waste

A. The Contractor shall handle hazardous waste and materials in accordance with applicable local, state, and federal regulations. Waste shall also be disposed of in approved landfills as applicable.

B. The Contractor shall prevent accumulation of wastes which create hazardous conditions.

C. Burning or burying rubbish and waste materials on the site shall not be allowed.

D. Disposal of hazardous wastes or materials into sanitary or storm sewers shall not be allowed.

1.04 Disposal of Surplus Materials

Unless otherwise shown on the Drawings, specified or directed, the Contractor shall legally dispose off the site all surplus materials and equipment from demolition and shall provide suitable off site disposal site, or utilize a site designated by the Owner.

Part 2 Products

2.01 Cleaning Materials and Equipment

Provide all required personnel, equipment and materials needed to maintain the specified standard of cleanliness.

2.02 Compatibility

Use only the cleaning materials, methods and equipment which are compatible with the surface being cleaned, as recommended by the manufacturer of the material or as approved by the Engineer.

Part 3 Execution

3.01 Progress Cleaning

A. General

1. Do not allow the accumulation of scrap, debris, waste material and other items not required for construction of this Work.

2. At least each week, and more often if necessary, completely remove all scrap, debris and waste material from the job site.

3. Provide adequate storage for all items awaiting removal from the job site, observing all requirements for fire protection and protection of the environment.

B. Site

1. Daily, and more often if necessary, inspect the site and pick up all scrap, debris and waste material. Remove all such items to the place designated for their storage.

2. Restack materials stored on site weekly.

3. At all times maintain the site in a neat and orderly condition which meets the approval of the Engineer.

3.02 Final Cleaning

A. Definitions: Unless otherwise specifically specified, “clean” for the purpose of this Article shall be interpreted as the level of cleanliness generally provided by commercial building maintenance subcontractors using commercial quality building maintenance equipment and materials.

B. General: Prior to completion of the Work, remove from the job site all tools, surplus materials, equipment, scrap, debris and waste. Conduct final progress cleaning as described in 3.01 above.

C. Site: Unless otherwise specifically directed by the Engineer, hose down all paved areas on the site and all public sidewalks directly adjacent to the site; rake clean other surfaces of the grounds. Completely remove all resultant debris.

E. Post Construction Cleanup: All evidence of temporary construction facilities, haul roads, work areas, structures, foundations of temporary structures, stockpiles of excess or waste materials, or any other evidence of construction, as directed by the Engineer.

F. Restoration of Landscape Damage: Any landscape feature damaged by the Contractor shall be restored as nearly as possible to its original condition at the Contractor's expense. The Engineer will decide what method of restoration shall be used.

G. Timing: Schedule final cleaning as approved by the Engineer to enable the Owner to accept the Project.

3.03 Cleaning During Owner's Occupancy

Should the Owner occupy the Work or any portion thereof prior to its completion by the Contractor and acceptance by the Owner, responsibilities for interim and final cleaning of the occupied spaces shall be as determined by the Engineer in accordance with the Supplementary Conditions of the Contract Documents.

END OF SECTION

Part 1 General

1.01 Scope

A. The work under this Section includes, but is not necessarily limited to, the compiling, maintaining, recording and submitting of project record documents as herein specified.

B. Record documents include, but are not limited to:

1. Drawings;
2. Specifications;
3. Change orders and other modifications to the Contract;
4. Engineer field orders or written instructions, including Requests for Information (RFI) and Clarification Memorandums;
5. Reviewed shop drawings, product data and samples;
6. Test records.

C. The Contractor shall maintain on the Project site throughout the Contract Time an up to date set of Record Drawings.

1.02 Maintenance of Documents and Samples

A. Storage

1. Store documents and samples in the Contractor's field office, apart from documents used for construction.
2. Provide files and racks for storage of documents.
3. Provide locked cabinet or secure storage space for storage of samples.

B. File documents and samples in accordance with format of these Specifications.

C. Maintenance

1. Maintain documents in a clean, dry, legible condition and in good order.
2. Do not use record documents for construction purposes.
3. Maintain at the site for the Owner one copy of all record documents.

D. Make documents and samples available at all times for inspection by Engineer.

E. Failure to maintain the Record Documents in a satisfactory manner may be cause for withholding of a certificate for payment.

1.03 Quality Assurance

A. Unless noted otherwise, Record Drawings shall provide dimensions, distances and coordinates to the nearest 0.1 foot.

B. Unless noted otherwise, Record Drawings shall provide elevations to the nearest 0.01 foot for all pertinent items constructed by the Contractor.

1.04 Recording

A. Label each document “Project Record” in neat, large printed letters.

B. Recording

1. Record information concurrently with construction progress.

2. Do not conceal any work until required information is recorded.

1.05 Record Drawings

A. The Contractor shall provide one set of the Contract drawings, with all changes recorded in that one set.

B. Legibly mark drawings to record actual construction, including:

1. All Construction

a. Changes of dimension and detail.

b. Changes made by Requests for Information (RFI), field order, clarification memorandums or by change order.

c. Details not on original Drawings.

2. Site Improvements, Including Underground Utilities

a. Horizontal and vertical locations of all exposed and underground utilities and appurtenances, both new facilities constructed and those utilities encountered, referenced to permanent surface improvements.

b. Location of and dimensions of roadways and parking areas, providing dimensions to back of curb when present.

c. The locations shall be referenced to at least two easily identifiable, permanent landmarks (e.g., power poles, valve markers, etc.) or benchmarks.

d. The Record Drawings shall include the horizontal angle and distance between manhole covers.

3. Structures

a. Depths of various elements of foundation in relation to finish first floor datum or top of wall.

b. Location of internal and buried utilities and appurtenances concealed in the construction, referenced to visible and accessible features of the structure.

1.06 Specifications

A. Legibly mark each section to record:

1. Manufacturer, trade name, catalog number, and supplier of each product and item of equipment actually installed.

2. Changes made by Requests for Information (RFI), field order, clarification memorandums, or by change order.

1.07 Submittal

A. At contract closeout, deliver Record Documents to the Engineer for the Owner.

B. Accompany submittal with transmittal letter, in duplicate, containing:

1. Date

2. Project title and number

3. Contractor's name and address

4. Title and number of each record document

5. Signature of Contractor or Contractor's authorized representative

END OF SECTION

Part 1 General

1.01 Project Maintenance and Warranty

A. Maintain and keep in good repair the Work covered by these Drawings and Specifications until acceptance by the Owner.

B. The Contractor shall warrant for a period of one year from the date of Owner's written acceptance of certain segments of the Work and/or Owner's written final acceptance of the Project, as defined in the Contract Documents, that the completed Work is free from all defects due to faulty products or workmanship and the Contractor shall promptly make such corrections as may be necessary by reason of such defects. The Owner will give notice of observed defects with reasonable promptness. In the event that the Contractor should fail to make such repairs, adjustments or other work that may be made necessary by such defects, the Owner may do so and charge the Contractor the cost thereby incurred. The Performance Bond shall remain in full force and effect throughout the warranty period.

C. The Contractor shall not be obligated to make replacements which become necessary because of ordinary wear and tear, or as a result of improper operation or maintenance, or as a result of improper work or damage by another Contractor or the Owner, or to perform any work which is normally performed by a maintenance crew during operation.

D. In the event of multiple failures of major consequences prior to the expiration of the one year warranty described above, the affected unit shall be disassembled, inspected and modified or replaced as necessary to prevent further occurrences. All related components which may have been damaged or rendered non serviceable as a consequence of the failure shall be replaced. A new 12 month warranty against defective or deficient design, workmanship, and materials shall commence on the day that the item is reassembled and placed back into operation. As used herein, multiple failure shall be interpreted to mean two or more successive failures of the same kind in the same item or failures of the same kind in two or more items. Major failures may include, but are not limited to, cracked or broken housings, piping, or vessels, excessive deflections, bent or broken shafts, broken or chipped gear teeth, premature bearing failure, excessive wear or excessive leakage around seals. Failures which are directly and clearly traceable to operator abuse, such as operations in conflict with published operating procedures or improper maintenance, such as substitution of unauthorized replacement parts, use of incorrect lubricants or chemicals, flagrant over or under lubrication and using maintenance procedures not conforming with published maintenance instructions, shall be exempted from the scope of the one year warranty. Should multiple failures occur in a given item, all products of the same size and type shall be disassembled, inspected, modified or replaced as necessary and rewarranted for one year.

F. The Contractor shall, at Contractor's own expense, furnish all labor, materials, tools and equipment required and shall make such repairs and removals and shall perform such work or reconstruction as may be made necessary by any structural or functional defect or failure resulting from neglect, faulty workmanship or faulty materials, in any part of the Work performed by the Contractor. Such repair shall also include refilling of trenches, excavations or embankments which show settlement or erosion after backfilling or placement.

G. Except as noted on the Drawings or as specified, all structures such as embankments and fences shall be returned to their original condition prior to the completion of the Contract. Any and all damage to any facility not designated for removal, resulting from the Contractor's operations, shall be promptly repaired by the Contractor at no cost to the Owner.

H. The Contractor shall be responsible for all road and entrance reconstruction and repairs and maintenance of same for a period of one year from the date of final acceptance. In the event the repairs and maintenance are not made immediately and it becomes necessary for the owner of the road to make such repairs, the Contractor shall reimburse the owner of the road for the cost of such repairs.

I. In the event the Contractor fails to proceed to remedy the defects upon notification within 15 days of the date of such notice, the Owner reserves the right to cause the required materials to be procured and the work to be done, as described in the Drawings and Specifications, and to hold the Contractor and the sureties on Contractor's bond liable for the cost and expense thereof.

J. Notice to Contractor for repairs and reconstruction will be made in the form of a registered letter addressed to the Contractor at Contractor's home office.

K. Neither the foregoing paragraphs nor any provision in the Contract Documents, nor any special guarantee time limit implies any limitation of the Contractor's liability within the law of the place of construction.

END OF SECTION

Part 1 General

1.01 Scope

A. Clearing and grubbing includes, but is not limited to, removing from the Project site, trees, stumps, roots, brush, structures, abandoned utilities, trash, debris and all other materials found on or near the surface of the ground in the construction area and understood by generally accepted engineering practice not to be suitable for construction of the type contemplated. Precautionary measures that prevent damage to existing features including trees, to remain is part of the Work.

B. Clearing and grubbing operations shall be coordinated with temporary and permanent erosion and sedimentation control procedures.

1.02 Quality Assurance

A. The Contractor shall comply with applicable codes, ordinances, rules, regulations and laws of local, municipal, state or federal authorities having jurisdiction over the Project. All required permits of a temporary nature shall be obtained for construction operations by the Contractor.

B. Open burning, if allowed, shall first be permitted by the local authority having jurisdiction. The Contractor shall notify the local fire department and abide by fire department restrictions.

1.03 Job Conditions

Location of the Work: The area to be cleared and grubbed is shown schematically on the Drawings or specified below. It includes all areas designated for construction, which is limited to no more than 6-feet width along the water main alignment.

Part 2 Products

2.01 Equipment

The Contractor shall furnish equipment of the type normally used in clearing and grubbing operations including, but not limited to, tractors, trucks, loaders and root rakes.

Part 3 Execution

3.01 Scheduling of Clearing

A. The Contractor shall clear at each construction site only that length of the right-of-way, permanent or construction easement which would be the equivalent of two week’s pipe laying. This length shall be determined from the Contractor's Progress Schedule.

B. The Engineer may permit clearing for additional lengths of the pipe line provided that temporary erosion and sedimentation controls are in place and a satisfactory stand of temporary grass is established. Should a satisfactory stand of grass not be possible, no additional clearing shall be permitted beyond that specified above.

C. A satisfactory stand of grass shall have no bare spots larger than one square yard. Bare spots shall be scattered and the bare area shall not comprise more than one percent of any given area.

3.02 Clearing and Grubbing

A. Clear and grub no more than 3 feet on each side of the pipeline before excavating. Remove all trees, growth, debris, stumps and other objectionable matter. Clear the construction easement or road right-of-way only if necessary.

B. Materials to be cleared, grubbed and removed from the Project site include, but are not limited to, all trees, stumps, roots, brush, trash, organic matter, paving, miscellaneous structures, houses, debris and abandoned utilities.

C. Grubbing shall consist of completely removing roots, stumps, trash and other debris from all graded areas so that topsoil is free of roots and debris. Topsoil is to be left sufficiently clean so that further picking and raking will not be required.

D. All stumps, roots, foundations and planking embedded in the ground shall be removed and disposed of. Piling and butts of utility poles shall be removed to a minimum depth of two feet below the limits of excavation for structures, trenches and roadways or two feet below finish grade, whichever is lower.

E. Landscaping features shall include, but are not necessarily limited to, fences, cultivated trees, cultivated shrubbery, property corners, man-made improvements, subdivision and other signs within the right-of-way and easement. The Contractor shall take extreme care in moving landscape features and promptly re-establishing these features.

F. Surface rocks and boulders shall be grubbed from the soil and removed from the site if not suitable as rip rap.

G. Where the tree limbs interfere with utility wires, or where the trees to be felled are in close proximity to utility wires, the tree shall be taken down in sections to eliminate the possibility of damage to the utility.

H. Any work pertaining to utility poles shall comply with the requirements of the appropriate utility.

I. All fences adjoining any excavation or embankment that, in the Contractor's opinion, may be damaged or buried, shall be carefully removed, stored and replaced. Any fencing that, in the Engineer's opinion, is significantly damaged shall be replaced with new fence material.

J. The Contractor shall exercise special precautions for the protection and preservation of trees, cultivated shrubs, sod, fences, etc. situated within the limits of the construction area but not directly within excavation and/or fill limits. The Contractor shall be held liable for any damage the Contractor's operations have inflicted on such property.

K. The Contractor shall be responsible for repairs and/or replacement of all damages to existing improvements resulting from Contractor's operations.

3.03 Disposal of Debris

A. The debris resulting from the clearing and grubbing operation shall be hauled to a disposal site secured by the Contractor and shall be disposed of in accordance with all requirements of federal, state, county and municipal regulations. No debris of any kind shall be deposited in any stream or body of water, or in any street or alley. No debris shall be deposited upon any private property except with written consent of the property owner. In no case shall any material or debris be left on the Project, shoved onto abutting private properties or buried on the Project.

END OF SECTION

Part 1 General

1.01 Scope

A. The Work specified in this Section consists of providing and maintaining temporary and permanent erosion and sedimentation controls as shown on the Drawings. This Section also specifies the subsequent removal of temporary erosion and sedimentation controls.

B. Temporary and permanent erosion and sedimentation controls include grassing and mulching of disturbed areas and structural barriers at those locations which will ensure that erosion during construction will be maintained within acceptable limits. Acceptable limits are as established by the Georgia Erosion and Sedimentation Control Act of 1975, as amended, Section 402 of the Federal Clean Water Act, and applicable codes, ordinances, rules, regulations, and laws of local, state, and municipal authorities having jurisdiction.

C. Land disturbance activity shall not commence until the Land Disturbance Permit has been issued.

1.02 Submittals

Submit product data in accordance with the requirements of Section 01340 of these Specifications.

1.03 Quality Assurance

A. The temporary and permanent erosion and sedimentation control measures shown on the Drawings are minimum suggested requirements. Any additional erosion and sedimentation control measures required by the Contractor's means, methods, techniques, and sequence of operation will be installed by the Contractor at no additional cost to the Owner.

B. Perform all Work under this Section in accordance with all pertinent rules and regulations including, but not necessarily limited to, those stated in these Specifications. Where provisions of pertinent rules and regulations conflict with these Specifications the more stringent provisions shall govern.

C. Provide all materials and promptly take all actions necessary to achieve effective erosion and sedimentation control in accordance with the Georgia Erosion and Sedimentation Control Act of 1975 as amended (OCGA §12-7-1, et. seq.), local ordinances, other permits, local enforcing agency guidelines, and these Specifications.

D. Basic Principles:

1. Coordinate the land disturbance activities to fit the topography, soil types, and conditions.

2. Minimize the disturbed area and the duration of exposure to erosive elements.

3. Provide temporary or permanent stabilization to disturbed areas immediately after rough grading is complete.

4. Safely convey run-off from the site to a stable outlet to prevent flooding and damage to downstream facilities resulting from increased runoff from the site.

5. Retain sediment on-site that was generated on-site.

6. Minimize encroachment upon watercourses.

E. Implementation:

1. The Contractor is solely responsible for the control of erosion within the Project site and the prevention of sedimentation from leaving the Project site or entering waterways.

2. The Contractor shall install temporary and permanent erosion and sedimentation controls which will ensure that runoff from the disturbed area of the Project site shall pass through a filter system before exiting the Project site.

3. The Contractor shall provide temporary and permanent erosion and sedimentation control measures to prevent silt and sediment from entering the waterways and designated wetland areas. The Contractor shall maintain an undisturbed vegetative buffer a minimum of 25 feet from the top of the bank.

4. The Contractor shall limit land disturbance activity to those areas shown on the Drawings.

5. The Contractor shall maintain erosion and sedimentation control measures within disturbed areas on the entire site at no additional cost to the Owner until the final acceptance of the Project. Maintenance shall include mulching, re-seeding, clean-out of sediment barriers and sediment ponds, replacement of washed-out or undermined rip rap and erosion control materials, to the satisfaction of the Owner and Engineer.

6. All fines imposed for improper erosion and sedimentation control shall be paid by the Contractor.

Part 2 Products

2.01 Sediment Barrier

A. Silt Fence:

1. Type C Silt Fence is a combination of Type A silt Fence with woven wire reinforcement. Type C Silt Fence reinforcement shall meet the requirements of Section 171 of Georgia D.O.T. Specifications.

2. Silt fence fabric shall be an approved product on the Georgia DOT Qualified Product List No. 36, latest edition.

B. Hay Bales: Hay bales shall be clean, seed-free cereal hay, rectangular in shape, and contain five cubic feet or more of material.

C. Concrete Blocks: Concrete blocks shall be hollow, non-load-bearing type.

2.02 Construction Exit Stone

Use sound, tough, durable stone resistant to the action of air and water. Slabby or shaley pieces will not be acceptable. Aggregate size shall be in accordance with the National Stone Association Size R-2 (1.5 to 3.5-inch stone) or Type 3 rip rap stone conforming to Section 805.01 of the Georgia Department of Transportation Standard Specifications.

2.04 Rip Rap

A. Stone Rip Rap: Use sound, tough, durable stones resistant to the action of air and unless noted otherwise, stone rip rap shall be Type 1.

1. Type 1 Rip Rap: Rip rap size and gradation shall conform to Section 805.01 of the Georgia Department of Transportation Standard Specification for Type 1 Stone Dumped Rip Rap.

2. Type 3 Rip Rap: Rip rap size and gradation shall conform to Section 805.01 of the Georgia Department of Transportation Standard Specifications for Type 3 Stone Dumped Rip Rap.

B. Sand Cement Bag Rip Rap: Sand cement bag rip rap shall conform to the Georgia Department of Transportation Standard Specifications, Section 603.

2.05 Plastic Filter Fabric

A. Plastic filter fabric shall conform to the Georgia Department of Transportation Standard Specifications, Section 881, for filter fabrics.

B. Plastic filter fabric shall be an approved product on the Georgia Department of Transportation Qualified Product List No. 28, latest edition.

2.06 Grassing

A. Grassing materials shall meet the requirements of the Georgia Department of Transportation Standard Specifications, latest edition; as shown in the table:

Material	Section No.
Topsoil	893.01
Seed and Sod	890
Fertilizer	891.01
Agricultural Lime	882.02
Mulch	893.02
Inoculants	893.04

B. Seed species shall be provided as shown on the Drawings.

C. Mulch Binder: Mulch on slopes exceeding 3 (horizontal) to 1 (vertical) shall be held in place by the use of a mulch binder, as approved by the Engineer. The

mulch binder shall be non-toxic to plant and animal life and shall be approved by the Engineer.

D. Water: Water shall be free of excess and harmful chemicals, organisms, and substances which may be harmful to plant growth or obnoxious to traffic. Salt or brackish water shall not be used. Water shall be furnished by the Contractor.

Part 3 Execution

3.01 General

A. Temporary and permanent erosion and sedimentation control measures shall prevent erosion and prevent sediment from exiting the site. If, in the opinion of the Owner, Engineer, or state inspector, the Contractor's temporary erosion and sedimentation control measures are inadequate, the Contractor shall provide additional maintenance for existing measures or additional devices to control erosion and sedimentation on the site at no additional cost to the Owner.

B. All erosion and sedimentation control devices and structures shall be inspected by the Contractor at least once a week and immediately after each rainfall occurrence. Any device or structure found to be damaged shall be repaired or replaced by the end of the day.

C. All erosion and sedimentation control measures and devices shall be constructed and maintained as indicated on the Drawings or specified herein until adequate permanent disturbed area stabilization has been provided and accepted by the Engineer. Once adequate permanent stabilization has been provided and accepted by the Engineer, all temporary erosion and sedimentation control structures and devices shall be removed.

3.02 Sediment Control

A. Construction Exit:

1. Construction exit(s) shall be placed as shown on the Drawings and as directed by the Engineer. A construction exit shall be located at any point traffic will be leaving a disturbed area to a public right-of-way, street, alley, sidewalk, or parking area.

2. Placement of Construction Exit Material: The ground surface upon which the construction exit material is to be placed shall be prepared to a smooth condition free from obstructions, depressions or debris. The plastic filter fabric shall be placed to provide a minimum number of overlaps and a minimum width of one foot of overlap at each joint. The stone shall be placed with its top elevation conforming to the surrounding ground elevations. The stone shall be dropped from no more than a three feet height during construction.

3. Construction Exit Maintenance: The Contractor shall regularly maintain the exit with the top dressing of stone to prevent tracking or flow of soil onto public rights-of-way and paved surfaces as directed by the Engineer.

4. Construction Exit Removal: Construction exit(s) shall be removed and properly disposed of when the disturbed area has been properly

stabilized, the tracking or flow of soil onto public rights-of-way or paved surfaces has ceased and as directed by the Engineer.

B. Sediment Barriers:

1. Sediment barriers shall include, but are not necessarily limited to, silt fences, hay bales, and any device which prevents sediment from exiting the disturbed area.

2. Silt fences and hay bales shall not be used in any flowing stream, creek, or river.

3. Sediment barriers shall be installed as shown on the Drawings and as directed by the Owner or Engineer.

4. Sediment barriers shall be maintained to ensure the depth of impounded sediment is no more than one-half of the original height of the barrier or as directed by the Engineer. Torn, damaged, destroyed, or washed-out barriers shall be repaired, reinforced, or replaced with new material and installed as shown on the Drawings and as directed by the Owner or Engineer.

5. Accumulated sediment shall be removed from the barrier and replaced and stabilized on-site as directed by the Owner or Engineer.

6. Sediment barrier shall be removed once the disturbed area has been stabilized with a permanent vegetative cover and the sediment barrier is no longer required as directed by the Engineer.

7. All non-biodegradable parts of the barrier shall be disposed of properly.

8. The disturbed area created by barrier removal shall be permanently stabilized.

C. Sediment Boxes: All inlet grates shall be covered with sediment boxes during grading operations and shall remain so covered until all open areas are permanently stabilized against erosion.

3.03 Erosion Control

A. Rip Rap

1. Rip rap shall be placed as shown on the Drawings and as directed by the Engineer. Rip rap shall be placed at all points where natural vegetation is disturbed on the banks of active streams. Compact backfill and place rip rap to prevent subsequent settlement and erosion. This requirement applies equally to construction alongside a stream as well as crossing a stream or drainage ditch.

2. When trenching across a stream or drainage ditch, place rip rap over the entire disturbed area upstream and downstream of the trench excavation. Place rip rap across creek bottom, across creek banks, and extend rip rap placement five feet beyond the top of each creek bank.

3. Preparation of Foundations: The ground surface upon which the rip rap is to be placed shall be brought to the correct lines and grades before

placement is commenced. Where filling of depressions is required, the new material shall be compacted with hand or mechanical tampers. Unless at creek banks or otherwise shown or specified, rip rap shall begin in a toe ditch constructed in original ground around the toe of the fill or the cut slope. The toe ditch shall be two feet deep in original ground, and the side next to the fill or cut shall have that same slope. After the rip rap is placed, the toe ditch shall be backfilled and the excess dirt spread neatly on the site.

4. Placement of Plastic Filter Fabric:

   a. Plastic filter fabric shall be placed under all rip rap unless shown or specified otherwise.

   b. Filter fabric shall not be placed under rip rap on stream or drainage ditch crossings.

   c. The surface to receive filter fabric shall be prepared to a smooth condition free from obstructions, depressions, and debris. The filter fabric shall be installed with the long dimension running up the slope and shall be placed to provide a minimum number of overlaps. The fabric shall be placed to provide a minimum width of one foot of overlap at each joint. The fabric shall be placed so that the upstream strip overlaps the downstream strip. The fabric shall be anchored in place with securing pins of the type recommended by the fabric manufacturer. Pins shall be placed on or within 3-inches of the centerline of the overlap. The fabric shall be placed loosely to avoid stretching and tearing during placement of the stone. The fabric shall be protected at all times during construction from clogging due to clay, silts, chemicals, or other contaminants. Contaminated fabric or fabric damaged during installation or during placement of rip rap shall be removed and replaced with uncontaminated and undamaged fabric at no additional cost to the Owner.

5. Placement of Rip Rap: Rip rap shall be placed on a 6-inch layer of soil, crushed stone or sand overlaying the filter fabric. Rip rap shall be placed with its top elevation conforming with the finished grade or the natural existing slope of the stream bank and stream bottom. The stone shall be dropped from no more than a three foot height during construction. Stone rip rap shall be placed to provide a uniform surface to the thickness shown on the Drawings. The thickness tolerance for the course shall be –3 inches and +6 inches.

B. Grassing:

1. Temporary Stabilization: Temporary stabilization shall be provided as shown on the Drawings and conforming to these Specifications to control erosion on the site. Temporary stabilization shall be provided to any area that will not receive permanent stabilization within the next 14 calendar days. Partial payment requests may be withheld for those portions of the Project not complying with this requirement.

2. Permanent Stabilization:

a. Permanent stabilization shall be provided as shown on the Drawings and conforming to these Specifications to control erosion on the site. Permanent stabilization shall be provided to all areas of land disturbance within seven calendar days of the completion of land disturbance for any area greater than 0.25 acre.

b. Where permanent stabilization cannot be immediately established because of an inappropriate season, the Contractor shall provide temporary stabilization. The Contractor shall return to the site at the appropriate season to provide permanent stabilization in areas that received only temporary stabilization.

3. Grassing shall meet the requirements of Section 700 of the Georgia Department of Transportation Standard Specifications, latest edition, unless specified otherwise.

4. Seed rate, fertilization and other requirements shall be provided as shown on the Drawings.

3.04 Clean-Up

A. Dispose of all excess erosion and sedimentation control materials in a manner satisfactory to the Owner and Engineer.

B. Final clean-up shall be performed in accordance with the requirements of these Specifications and to the satisfaction of the Owner and Engineer.

END OF SECTION

Part 1 General

1.01 Scope

A. The work under this Section consists of furnishing all labor, equipment and materials and performing all operations in connection with the trench excavation and backfill required to install the water lines as shown on the Drawings and as specified.

B. Excavation shall include the removal of any trees, stumps, brush, debris or other obstacles which remain after the clearing and grubbing operations, which may obstruct the work, and the excavation and removal of all earth, rock or other materials to the extent necessary to install the pipeline and appurtenances in conformance with the lines and grades shown on the Drawings and as specified.

C. Backfill shall include the refilling and compaction of the fill in the trenches and excavations up to the surrounding ground surface or road grade at crossing.

D. The trench is divided into five specific areas:

1. Foundation: The area beneath the bedding, sometimes also referenced to as trench stabilization.

2. Bedding: The area above the trench bottom (or foundation) and below the bottom of the barrel of the pipe.

3. Haunching: The area above the bottom of the barrel of the pipe up to a specified height above the bottom of the barrel of the pipe.

4. Initial Backfill: The area above the haunching material and below a plane 18 inches above the top of the barrel of the pipe.

5. Final Backfill: The area above a plane 18-inches above the top of the barrel of the pipe.

E. The choice of method, means, techniques and equipment rests with the Contractor. The Contractor shall select the method and equipment for trench excavation and backfill depending upon the type of material to be excavated and backfilled, the depth of excavation, the amount of space available for operation of equipment, storage of excavated material, proximity of man-made improvements to be protected, available easement or right-of-way and prevailing practice in the area.

1.02 Quality Assurance

A. Density: All references to “maximum dry density” shall mean the maximum dry density defined by the “Maximum Density-Optimum Moisture Test”, ASTM D 698, except that for non-cohesive materials “maximum dry density” shall mean the maximum index density as determined by the “Maximum Index Density of Soils Using a Vibratory Table”, ASTM D 4253. Determination of the density of foundation, bedding, haunching, or backfill materials in place shall meet with the requirements of ASTM D 1556, “Density of Soil In Place by the Sand Cone Method”, ASTM D 2937, “Density of Soil In Place by the Drive-Cylinder Method” or ASTM D 2922, “Density of Soil and Soil-Aggregate In Place by Nuclear Methods (Shallow Depth)”.

B. Sources and Evaluation Testing: Testing of materials to certify conformance with the Specifications shall be performed by an independent testing laboratory in accordance with Section 01410 of these Specifications. All imported fill materials shall meet the requirements of on-site fill materials.

1.03 Safety

Perform all trench excavation and backfilling activities in accordance with the Occupational Safety and Health Act of 1970 (PL 91-596), as amended. The Contractor shall pay particular attention to the Safety and Health Regulations Part 1926, Subpart P "Excavation, Trenching & Shoring" as described in OSHA publication 2226.

Part 2 Products

2.01 Trench Foundation Materials

A. Crushed stone shall be utilized for trench foundation (trench stabilization) and shall meet the requirements of the Georgia Department of Transportation Specification 800.2.01, Group I (limestone, marble or dolomite) or Group II (quartzite, granite or gneiss). Stone size shall be between No. 57 and No. 4, inclusive.

2.02 Bedding and Haunching Materials

A. Unless specified otherwise, bedding and haunching materials shall be crushed stone as specified below.

B. Crushed stone utilized for bedding and haunching shall meet the requirements of the Georgia Department of Transportation Specification 800.01, Group I (limestone, marble or dolomite) or Group II (quartzite, granite or gneiss). Stone size shall be between No. 57 and No. 4, inclusive.

C. Earth materials utilized for bedding and haunching shall be suitable materials selected from materials excavated from the trench. Suitable materials shall be clean and free of rock larger than 2-inches at its largest dimension, organics, cinders, stumps, limbs, frozen earth or mud, man-made wastes and other unsuitable materials. Should the material excavated from the trench be saturated, the saturated material may be used as earth material, provided it is allowed to dry properly and it is capable of meeting the specified compaction requirements. When necessary, earth bedding and haunching materials shall be moistened to facilitate compaction by tamping. If materials excavated from the trench are not suitable for use as bedding or haunching material, provide select material conforming to the requirements of this Section at no additional cost to the Owner.

D. Filter Fabric Woven Type

1. Filter fabric associated with bedding shall be a polypropylene woven fabric. The fabric shall be a high modulus type with good separation capabilities. The fabric shall be inert to biological degradation and naturally occurring chemicals, alkalies and acids.

2. The fabric shall have an equivalent opening size EOS of 20 to 45. The fabric shall also conform to the minimum property values listed in the following table:

Fabric Property	Unit	Test Method	Minimum Value
Grab Tensile Strength	lbs.	ASTM D 4632	200
Grab Tensile Elongation	%	ASTM D 4632	30 (max.)
Mullen Burst Strength	psi	ASTM D 3786	400
Trapezoid Tear Strength	lbs.	ASTM D 4533	75
Puncture Strength	lbs.	ASTM D 3787	75

3. If ordered by the Engineer, the filter fabric manufacturer shall furnish the services of a competent factory representative to supervise and/or inspect the installation of pipe. This service will be furnished for a minimum of 10 days during initial pipe installation.

4. Filter fabric shall be Mirafi 500X, Amoco 2002 or Exxon GTF-200.

2.03 Initial Backfill

A. Initial backfill material shall be crushed stone or earth materials as specified for bedding and haunching materials.

B. When necessary, initial backfill materials shall be moistened to facilitate compaction by tamping. If materials excavated from the trench are not suitable for use as initial backfill material, provide select material conforming to the requirements of this Section at no additional cost to the owner.

2.04 Final Backfill

A. Final backfill material shall be general excavated earth materials, shall not contain rock larger than 2-inches at its greatest diameter, cinders, stumps, limbs, man-made wastes and other unsuitable materials. If materials excavated from the trench are not suitable for use as final backfill material, provide select material conforming to the requirements of this Section.

2.05 Select Backfill

Select backfill shall be materials which meet the requirements as specified for bedding, haunching or initial backfill materials, including compaction requirements.

2.06 Concrete

A. Concrete for bedding, haunching, initial backfill or encasement shall have a compressive strength of not less than 3,000 psi, with not less than 5.5 bags of cement per cubic yard and a slump between 3 and 5-inches. Ready-mixed concrete shall be mixed and transported in accordance with ASTM C 94. Reinforcing steel shall conform to the requirements of ASTM A 615, Grade 60.

Part 3 Execution

3.01 Trench Excavation

A. Topsoil and grass shall be stripped a minimum of 6-inches over the trench excavation site and stockpiled separately for replacement over the finished grading areas.

B. Trenches shall be excavated to the lines and grades shown on the Drawings with the centerlines of the trenches on the centerlines of the pipes and to the dimensions which provide the proper support and protection of the pipe and other structures and accessories.

C. Trench Width for Pipelines

1. The sides of all trenches shall be vertical to a minimum of one foot above the top of the pipe. Unless otherwise indicated on the Drawings, the maximum trench width shall be equal to the sum of the outside diameter of the pipe plus two feet. The minimum trench width shall be that which allows the proper consolidation of the haunching and initial backfill material.

2. Excavate the top portion of the trench to any width within the construction easement or right-of-way which will not cause unnecessary damage to adjoining structures, roadways, pavement, utilities, trees or private property. Where necessary to accomplish this, provide sheeting and shoring.

3. Where rock is encountered in trenches, excavate to remove boulders and stones to provide a minimum of 9-inches clearance between the rock and any part of the pipe barrel or manhole.

4. Wherever the prescribed maximum trench width is exceeded, the Contractor shall use the next higher Class or Type of bedding and haunching as shown on the Drawings for the full trench width as actually cut. The excessive trench width may be due to unstable trench walls, inadequate or improperly placed bracing and sheeting which caused sloughing, accidental over-excavation, intentional over-excavation necessitated by the size of the Contractor's tamping and compaction equipment, intentional over-excavation due to the size of the Contractor's excavation equipment, or other reasons beyond the control of the Engineer or Owner.

D. Depth

1. The trenches shall be excavated to the required depth or elevation which allow for the placement of the pipe and bedding to the dimensions shown on the Drawings.

2. Where rock is encountered in trenches for pipelines, excavate to the minimum depth which will provide clearance below the pipe barrel of 8-inches for pipe 21-inches in diameter and smaller and 12-inches for larger pipe, valves and manholes.

E. Excavated Materials

1. Excavated materials shall be placed adjacent to the work to be used for backfilling as required. Top soil shall be carefully separated and lastly placed in its original location.

2. Excavated material shall be placed sufficiently back from the edge of the excavation to prevent caving of the trench wall, to permit safe access along the trench and not cause any drainage problems. Excavated material shall be placed so as not to damage existing landscape features or man-made improvements.

3.02 Sheeting, Bracing and Shoring

A. Sheeting, bracing and shoring shall be installed in the following instances:

1. Where sloping of the trench walls does not adequately protect persons within the trench from slides or cave-ins.

2. In caving ground.

3. In wet, saturated, flowing or otherwise unstable materials.

4. Where necessary to prevent damage to adjoining buildings, structures, roadways, pavement, utilities, trees or private properties which are required to remain.

5. Where necessary to maintain the top of the trench within the available construction easement or right-of-way.

B. In all cases, excavation protection shall strictly conform to the requirements of the Occupational Safety and Health Act of 1970, as amended.

C. Timber: Timber for shoring, sheeting, or bracing shall be sound and free of large or loose knots and in good, serviceable condition. Size and spacing shall be in accordance with OSHA regulations.

D. Steel Sheeting and Sheet Piling: Steel sheet piling shall be the continuous interlock type. The weight, depth and section modulus of the sheet piling shall be sufficient to restrain the loads of earth pressure and surcharge from existing foundations and live loads. Procedure for installation and bracing shall be so scheduled and coordinated with the removal of the earth that the ground under existing structures shall be protected against lateral movement at all times. The Contractor shall provide closure and sealing between sheet piling and existing facilities.

E. Trench Shield: A trench shield or box may be used to support the trench walls. The use of a trench shield does not necessarily preclude the additional use of bracing and sheeting. When trench shields are used, care must be taken to avoid disturbing the alignment and grade of the pipe or disrupting the haunching of the pipe as the shield is moved. When the bottom of the trench shield extends below the top of the pipe, the trench shield will be raised in 6-inch increments with specified backfilling occurring simultaneously. At no time shall the trench shield be “dragged” with the bottom of the shield extending below the top of the pipe or utility.

F. Remove bracing and sheeting in units when backfill reaches the point necessary to protect the pipe and adjacent property. Leave sheeting in place when in the opinion of the Engineer it cannot be safely removed or is within three feet of an existing structure, utility, or pipeline. Cut off any sheeting left in place at least two feet below the surface.

G. Sheet piling within three feet of an existing structure or pipeline shall remain in place, unless otherwise directed by the Engineer.

3.03 Rock Excavation

A. Definition of Rock: Any material which cannot be excavated with conventional excavating equipment, and is removed by drilling and blasting, and occupies an original volume of at least one-half cubic yard.

B. Blasting: Provide licensed, experienced workmen to perform blasting. Conduct blasting operations in accordance with all existing ordinances and regulations. Protect all buildings and structures from the effects of the blast. Repair any resulting damage. If the Contractor repeatedly uses excessive blasting charges or blasts in an unsafe or improper manner, the Engineer may direct the Contractor to employ an independent blasting consultant to supervise the preparation for each blast and approve the quantity of each charge.

C. Removal of Rock: Dispose of rock off site that is surplus or not suitable for use as rip rap or backfill.

D. The Contractor shall notify the Engineer prior to any blasting. Additionally, the Contractor shall notify the Engineer and local fire department before any charge is set.

E. Following review by the Engineer regarding the proximity of permanent buildings and structures to the blasting site, the Engineer may direct the Contractor to employ an independent, qualified specialty sub- contractor, approved by the Engineer, to monitor the blasting by use of seismograph, identify the areas where light charges must be used, conduct pre-blast and post-blast inspections of structures, including photographs or videos, and maintain a detailed written log.

3.04 Dewatering Excavations

A. Dewater excavation continuously to maintain a water level two feet below the bottom of the trench.

B. Control drainage in the vicinity of excavation so the ground surface is properly pitched to prevent water running into the excavation.

C. There shall be sufficient pumping equipment, in good working order, available at all times, to remove any water that accumulates in excavations. Where the utility crosses natural drainage channels, the work shall be conducted in such a manner that unnecessary damage or delays in the prosecution of the work will be prevented. Provision shall be made for the satisfactory disposal of surface water to prevent damage to public or private property.

D. In all cases, accumulated water in the trench shall be removed before placing bedding or haunching, laying pipe, placing concrete or backfilling.

E. Where dewatering is performed by pumping the water from a sump, crushed stone shall be used as the medium for conducting the water to the sump. Sump depth shall be at least two feet below the bottom of the trench. Pumping equipment shall be of sufficient quantity and/or capacity to maintain the water level in the sump two feet below the bottom of the trench. Pumps shall be a type such that intermittent flows can be discharged. A standby pump shall be

required in the event the operating pump or pumps clog or otherwise stop operation.

F. Dewater by use of a well point system when pumping from sumps does not lower the water level two feet below the trench bottom. Where soil conditions dictate, the Contractor shall construct well points cased in sand wicks. The casing, 6 to 10-inches in diameter, shall be jetted into the ground, followed by the installation of the well point, filling casing with sand and withdrawing the casing.

3.05 Trench Foundation and Stabilization

A. The bottom of the trench shall provide a foundation to support the pipe and its specified bedding. The trench bottom shall be graded to support the pipe and bedding uniformly throughout its length and width.

B. If, after dewatering as specified above, the trench bottom is spongy, or if the trench bottom does not provide firm, stable footing and the material at the bottom of the trench will still not adequately support the pipe, the trench will be determined to be unsuitable and the Engineer shall then authorize payment for trench stabilization.

C. Should the undisturbed material encountered at the trench bottom constitute, in the opinion of the Engineer, an unstable foundation for the pipe, the Contractor shall be required to remove such unstable material and fill the trench to the proper subgrade with crushed stone as directed by the Engineer.

D. Where the replacement of unsuitable material with crushed stone does not provide an adequate trench foundation, the trench bottom shall be excavated to a depth of at least two feet below the specified trench bottom. Place filter fabric in the bottom of the trench and support the fabric along the trench walls until the trench stabilization, bedding, haunching and pipe have been placed at the proper grade. The ends of the filter fabric shall be overlapped by one foot above the pipe.

E. Where trench stabilization is provided, the trench stabilization material shall be compacted to at least 90 percent of the maximum dry density, unless shown or specified otherwise.

3.06 Bedding and Haunching

A. Prior to placement of bedding material, the trench bottom shall be free of any water, loose rocks, boulders or large dirt clods.

B. Bedding material shall be placed to provide uniform support along the bottom of the pipe and to place and maintain the pipe at the proper elevation. The initial layer of bedding placed to receive the pipe shall be brought to the grade and dimensions indicated on the Drawings. All bedding shall extend the full width of the trench bottom. The pipe shall be placed and brought to grade by tamping the bedding material or by removal of the excess amount of the bedding material under the pipe. Adjustment to grade line shall be made by scraping away or filling with bedding material. Wedging or blocking up of pipe shall not be permitted. Applying pressure to the top of the pipe, such as with a backhoe bucket, to lower the pipe to the proper elevation or grade shall not be permitted. Each pipe section shall have a uniform bearing on the bedding for the length of the pipe, except immediately at the joint.

C. At each joint, excavate bell holes of ample depth and width to permit the joint to be assembled properly and to relieve the pipe bell of any load.

D. After the pipe section is properly placed, add the haunching material to the specified depth. The haunching material shall be shovel sliced, tamped, vigorously chinked or otherwise consolidated to provide uniform support for the pipe barrel and to fill completely the voids under the pipe, including the bell hole. Prior to placement of the haunching material, the bedding shall be clean and free of any water, loose rocks, boulders or dirt clods.

E. Water Mains

1. Ductile Iron Pipe

a. Unless otherwise shown on the Drawings or specified, utilize earth materials for bedding and haunching. Type 2, 3, 4 and 5 bedding shall be as detailed on the Drawings.

b. Unless specified or shown otherwise, bedding shall meet the requirements for Type 2 Pipe Bedding. Unless specified or shown otherwise for restrained joint pipe and fittings, bedding shall meet the requirements for Type 4 Pipe Bedding.

c. Where the depth of cover over the piping exceeds 9 feet, the pipe bedding shall meet the requirements of Type 4 Pipe Bedding. Where the depth of cover over the piping exceeds 14 feet, the pipe bedding shall meet the requirements of Type 5 Pipe Bedding.

d. Type 4 or Type 5 Pipe Bedding called for on the Drawings, specified or ordered by the Engineer, shall meet requirements for Type 4 or Type 5 Pipe Bedding, utilizing crushed stone bedding and haunching material.

F. Manholes: Excavate to a minimum of 12-inches below the planned elevation of the base of the manhole. Place and compact crushed stone bedding material to the required grade before installing the manhole.

G. Excessive Width and Depth

1. Water Mains: If the trench is excavated to excess width, provide the next higher type or class of pipe bedding, but a minimum of Type 4, as detailed on the Drawings.

2. If the trench is excavated to excessive depth, provide crushed stone to place the bedding at the proper elevation or grade.

H. Compaction: Bedding and haunching materials under pipe, manholes and accessories shall be compacted to a minimum of 90 percent of the maximum dry density, unless shown or specified otherwise.

3.07 Initial Backfill

A. Initial backfill shall be placed to anchor the pipe, protect the pipe from damage by subsequent backfill and ensure the uniform distribution of the loads over the top of the pipe.

B. Place initial backfill material carefully around the pipe in uniform layers to a depth of at least 18-inches above the pipe barrel or duct bank. Layer depths shall be a maximum of 6-inches for pipe 18-inches in diameter and smaller and a maximum of 12-inches for pipe larger than 18-inches in diameter.

C. Backfill on both sides of the pipe simultaneously to prevent side pressures.

D. Compact each layer thoroughly with suitable hand tools or tamping equipment.

E. Initial backfill shall be compacted to a minimum 90 percent of the maximum dry density, unless shown or specified otherwise.

F. If materials excavated from the trench are not suitable for use as backfill materials, provide select backfill material conforming to the requirements of this Section.

3.08 Concrete Encasement for Pipelines

Where concrete encasement is shown on the Drawings for pipelines, excavate the trench to provide a minimum of 6-inches clearance from the bell of the pipe. Lay the pipe to line and grade on concrete blocks. In lieu of bedding, haunching and initial backfill, place concrete to the full width of the trench and to a height of not less than 12-inches above the pipe bell. Do not backfill the trench for a period of at least 24 hours after concrete is placed.

3.09 Final Backfill

A. Backfill carefully to restore the ground surface to its original condition.

B. The top 6-inches shall be topsoil obtained as specified in “Trench Excavation” of this Section.

C. Excavated material which is unsuitable for backfilling, and excess material, shall be disposed of, at no additional cost to the Owner, in a manner approved by the Engineer. Surplus soil may be neatly distributed and spread over the site, if approved by the Engineer. If such spreading is allowed, the site shall be left in a clean and sightly condition and shall not affect pre-construction drainage patterns. Surplus rock from the trenching operations shall be removed from the site.

D. If materials excavated from the trench are not suitable for use as backfill materials, provide select backfill material conforming to the requirements of this Section.

E. After initial backfill material has been placed and compacted, backfill with final backfill material. Place backfill material in uniform layers, compacting each layer thoroughly as follows:

1. In 6-inch layers, if using light power tamping equipment, such as a “jumping jack”.

2. In 12-inch layers, if using heavy tamping equipment, such as hammer with tamping feet.

3. In 24-inch layers, if using a hydra-hammer.

F. Settlement: If trench settles, re-fill and grade the surface to conform to the adjacent surfaces.

G. Final backfill shall be compacted to a minimum 90 percent of the maximum dry density, unless specified otherwise.

3.10 Additional Material

Where final grades above the pre-construction grades are required to maintain minimum cover, additional fill material will be as shown on the Drawings. Utilize excess material excavated from the trench, if the material is suitable. If excess excavated materials are not suitable, or if the quantity available is not sufficient, provide additional suitable fill material at no cost to the owner.

3.11 Backfill Under Roads

Compact backfill underlying pavement and sidewalks, and backfill under dirt and gravel roads to a minimum 95 percent of the maximum dry density. The top 12-inches shall be compacted to a minimum of 98 percent of the maximum dry density.

3.12 Backfill Within Georgia DOT Right-of-Way

Backfill within the Georgia DOT right-of-way shall meet the requirements stipulated in the “Utility Accommodation Policy and Standards”, published by the Georgia Department of Transportation.

3.13 Backfill Along Restrained Joint Pipe

Backfill along restrained joint pipe shall be compacted to a minimum 90 percent of the maximum dry density.

3.14 Testing and Inspection

A. The soils testing laboratory is responsible for the following:

1. Compaction tests in accordance with Article 1.02 of this Section.

2. Field density tests for each two feet of lift, one test for each 1,000 feet of pipe installed or more frequently if ordered by the Engineer.

3. Inspecting and testing stripped site, subgrades and proposed fill materials.

B. The Contractor's duties relative to testing include:

1. Notifying laboratory of conditions requiring testing.

2. Coordinating with laboratory for field testing.

3. Paying costs for additional testing performed beyond the scope of that required and for re-testing where initial tests reveal non-conformance with specified requirements.

4. Providing excavation as necessary for laboratory personnel to conduct tests.

C. Inspection

1. Earthwork operations, acceptability of excavated materials for bedding or backfill, and placing and compaction of bedding and backfill is subject to inspection by the Engineer.

D. Comply with applicable codes, ordinances, rules, regulations and laws of local, municipal, state or federal authorities having jurisdiction.

END OF SECTION

Part 1 General

1.01 Scope

A. The work covered by this Section includes furnishing all labor, materials and equipment required to bore and jack casings and to properly complete pipeline construction as described herein and/or shown on the Drawings.

B. Supply all materials and perform all work in accordance with applicable American Society for Testing and Materials (ASTM), American Water Works Association (AWWA), American National Standards Institute (ANSI) or other recognized standards. Latest revisions of all standards are applicable. If requested by the Engineer, submit evidence that manufacturer has consistently produced products of satisfactory quality and performance over a period of at least two years.

1.02 Submittals

A. Submit shop drawings, product data, and experience in accordance with the requirements of Section 01340 of these Specifications.

B. Material Submittals: The Contractor shall provide shop drawings and other pertinent specifications and product data as follows:

1. Shop drawings for casing pipe showing sizes and connection details.

2. Design mixes for concrete and grout.

3. Casing Spacers.

C. Experience Submittals

1. Boring and jacking casings is deemed to be specialty contractor work. If the Contractor elects to perform the work, the Contractor shall provide evidence as required by the General Conditions. A minimum of five continuous years of experience in steel casing construction is required of the casing installer. Evidence of this experience must be provided with the shop drawings for review by the Engineer.

1.03 Storage and Protection

All materials shall be stored and protected in accordance with the manufacturer's recommendations and as approved by the Engineer.

Part 2 Products

2.01 Materials and Construction

A. Casing

1. The casing shall be new and unused pipe. The casing shall be made from steel plate having a minimum yield strength of 35,000 psi. The steel plate shall also meet the chemical requirements of one of the following: ASTM A36; ASTM A139, Grade B, C, D or E; ASTM A53, Type S or Type E, Grade A or B.

2. The outside and inside of the casing pipe shall be coated with coal tar epoxy having a minimum dry film thickness of 16 mils. Surface preparation shall be SSPC-SP-10. Epoxy shall have a minimum solids content of 65 percent by volume and shall be air or airless spray applied; minimum drying time shall be seven days. Brushing shall be permitted in small areas only. All coating and recoating shall be done in strict accordance with the manufacturer's recommendations. Epoxy shall be Tnemec, Carboline or Valspar.

3. The thicknesses of casing shown in paragraph B. below are minimum thicknesses. Actual thicknesses shall be determined by the casing installer, based on an evaluation of the required forces to be exerted on the casing when jacking. Any buckling of the casing due to jacking forces shall be repaired at no additional cost to the Owner.

4. The diameters of casing shown in paragraph B. below and shown on the Drawings are minimum. Larger casings, with the Engineer's approval, may be provided at no additional cost to the Owner, for whatever reasons the Contractor may decide, whether casing size availability, line and grade tolerances, soil conditions, etc.

B. Casing Sizes

UNDER ROADWAYS		
Pipe Diameter, inches	Casing Diameter, inches	Wall Thickness, inches
6	12	0.250
8	16	0.250
10	16	0.250
12	18	0.250
14	22	0.250
16	24	0.250
18	30	0.312
20	30	0.312
24	36	0.375

C. Casing Spacers: Casing spacers shall meet one of the following requirements:

1. Casing spacers shall be flanged, bolt-on style with a two-section stainless steel shell lined with a PVC liner, minimum 0.09-inch thick also having a hardness of 85-90 durometer. Runners shall be attached to stainless steel risers which shall be properly welded to the shell. The height of the runners and risers shall be manufactured such that the pipe does not float within the casing.

2. Casing spacers shall be a two-section, flanged, bolt on style constructed of heat fused PVC coated steel, minimum 14 gauge band and 10 gauge risers, with 2-inch wide glass reinforced polyester insulating skids, heavy duty PVC inner liner, minimum 0.09-inch thick having a hardness of 85-90 durometer, and all stainless steel or cadmium plated hardware.

3. Casing spacers shall be equal to Cascade Waterworks Manufacturing Company, Pipeline Seal and Insulator, Inc., or Advance Products and Systems, Inc.

D. Grout: Grout may be used for filling the void between the casing pipe and the carrier pipe. Cement shall conform to ASTM C 150, Type I or Type II. Grout shall have a minimum compressive strength of 100 psi attained within 24 hours.

E. Carrier Pipe: Carrier pipes shall meet requirements as specified in Section 02665 of these Specifications.

F. Surface Settlement Markers: Surface settlement markers within pavement areas shall be P.K. nails. Surface settlement markers within non-paved areas shall be wooden hubs.

2.02 Equipment

A. A cutting head shall be attached to a continuous auger mounted inside the casing pipe.

Part 3 Execution

3.01 General

A. Interpretation of soil investigation reports and data, investigating the site and determination of the site soil conditions prior to bidding is the sole responsibility of the Contractor. Any subsurface investigation by the Bidder or Contractor must be approved by the appropriate authority having jurisdiction over the site. Rock and/or water, if encountered, shall not entitle the Contractor to additional compensation.

B. Casing construction shall be performed so as not to interfere with, interrupt or endanger roadway surface and activity thereon, and minimize subsidence of the surface, structures, and utilities above and in the vicinity of the casing. Support the ground continuously in a manner that will prevent loss of ground and keep the perimeters and face of the casing, passages and shafts stable. The Contractor shall be responsible for all settlement resulting from casing operations and shall repair and restore damaged property to its original or better condition at no cost to the Owner.

C. Face Protection: The face of the excavation shall be protected from the collapse of the soil into the casing.

D. Casing Design: Design of the bore pit and required bearing to resist jacking forces are the responsibility of the Contractor. The excavation method selected shall be compatible with expected ground conditions. The lengths of the casing shown on the Drawings are the minimum lengths required. The length of the casing may be extended for the convenience of the Contractor, at no additional cost to the Owner. Due to restrictive right-of-way and construction easements,

boring and jacking casing lengths less than the nominal 20 foot length may be necessary.

E. Roadway Crossings

1. The Contractor shall be held responsible and accountable for the coordinating and scheduling of all construction work within the roadway right-of-way.

2. Work along or across the roadway department rights-of-way shall be subject to inspection by such roadway department.

3. All installations shall be performed to leave free flows in drainage ditches, pipes, culverts or other surface drainage facilities of the roadway, street or its connections.

4. No excavated material or equipment shall be placed on the pavement or shoulders of the roadway without the express approval of the roadway department.

5. In no instance will the Contractor be permitted to leave equipment (trucks, backhoes, etc.) on the pavement or shoulder overnight. Construction materials to be installed, which are placed on the right-of-way in advance of construction, shall be placed in such a manner as not to interfere with the safe operation of the roadway.

6. The Contractor shall be responsible for providing the Owner sufficient information to obtain a blasting permit in a timely manner.

3.02 Groundwater Control

A. The Contractor shall control the groundwater throughout the construction of the casing.

B. Methods of dewatering shall be at the option and responsibility of the Contractor. Maintain close observation to detect settlement or displacement of surface facilities due to dewatering. Should settlement or displacement be detected, notify the Engineer immediately and take such action as necessary to maintain safe conditions and prevent damage.

C. When water is encountered, provide and maintain a dewatering system of sufficient capacity to remove water on a 24 hour basis keeping excavations free of water until the backfill operation is in progress. Dewatering shall be performed in such a manner that removal of soil particles is held to a minimum. Dewater into a sediment trap and comply with requirements specified in Section 02125 of these Specifications.

3.03 Safety

A. Provide all necessary bracing, bulkheads and shields to ensure complete safety to all traffic, persons and property at all times during the work. Perform the work in such a manner as to not permanently damage the roadbed or interfere with normal traffic over it.

B. Observe all applicable requirements of the regulations of the authorities having jurisdiction over this site. Conduct the operations in such a manner that all work will be performed below the level of the roadbed.

C. Perform all activities in accordance with the Occupational Safety and Health Act of 1970 (PL-596), as amended, applicable regulations of the Federal Government, OSHA 29CFR 1926 and applicable criteria of ANSI A10.16-81, “Safety Requirements for Construction of Tunnel Shafts and Caissons”.

3.04 Surface Settlement Monitoring

A. Provide surface settlement markers, placed as specified and as directed by the Engineer. The Contractor shall place settlement markers outside of pavement area, along the centerline of the casing at 20 foot intervals and offset 10 feet each way from the centerline. Markers shall also be placed at each shoulder of the roadway, at each edge of pavement, at the centerline of the pavement and at 10 and 25 feet in each direction from the centerline of the casing. Tie settlement markers to bench marks and indices sufficiently removed as not to be affected by the casing operations.

B. Make observations of surface settlement markers, placed as required herein, at regular time intervals acceptable to the Engineer. In the event settlement or heave on any marker exceeds 1-inch, the Contractor shall immediately cease work and using a method approved by the Engineer and the authority having jurisdiction over the project site, take immediate action to restore surface elevations to that existing prior to start of casing operations.

C. Take readings and permanently record surface elevations prior to start of dewatering operations and/or shaft excavation. The following schedule shall be used for obtaining and recording elevation readings: all settlement markers, once a week; all settlement markers within 50 feet of the casing heading, at the beginning of each day; more frequently at the Engineer's direction if settlement is identified. Make all elevation measurements to the nearest 0.01 foot.

D. The Contractor shall cooperate fully with jurisdictional personnel. Any settlement shall be corrected by, and at the expense of, the Contractor.

E. Promptly report any settlement and horizontal movement immediately to the Engineer and take immediate remedial action.

3.05 Boring and Jacking

A. Shaft

1. Conduct boring and jacking operations from a shaft excavated at one end of the section to be bored. Where conditions and accessibility are suitable, place the shaft on the downstream end of the bore.

2. The shaft shall be rectangular and excavated to a width and length required for ample working space. If necessary, sheet and shore shaft properly on all sides. Shaft sheeting shall be timber or steel piling of ample strength to safely withstand all structural loadings of whatever nature due to site and soil conditions. Keep preparations dry during all operations. Perform pumping operations as necessary.

3. The bottom of the shaft shall be firm and unyielding to form an adequate foundation upon which to work. In the event the shaft bottom is not stable, excavate to such additional depth as required and place a gravel sub-base or a concrete sub-base if directed by the Engineer due to soil conditions.

B. Jacking Rails and Frame

1. Set jacking rails to proper line and grade within the shaft. Secure rails in place to prevent settlement or movement during operations. The jacking rails shall cradle and hold the casing pipe on true line and grade during the progress of installing the casing.

2. Place backing between the heels of jacking rails and the rear of the shaft. The backing shall be adequate to withstand all jacking forces and loads.

3. The jacking frame shall be of adequate design for the magnitude of the job. Apply thrust to the end of the pipe in such a manner to impart a uniformly balanced load to the pipe barrel without damaging the joint ends of the pipe.

C. Boring and jacking of casing pipes shall be accomplished by the dry auger boring method without jetting, sluicing or wetboring.

D. Auger the hole and jack the casing through the soil simultaneously.

E. Bored installations shall have a bored-hole diameter essentially the same as the outside diameter of the casing pipe to be installed.

F. Execute boring ahead of the casing pipe with extreme care, commensurate with the rate of casing pipe penetration. Boring may proceed slightly in advance of the penetrating pipe and shall be made in such a manner to prevent any voids in the earth around the outside perimeter of the pipe. Make all investigations and determine if the soil conditions are such as to require the use of a shield.

G. As the casing is installed, check the horizontal and vertical alignment frequently. Make corrections prior to continuing operation.

H. Any casing pipe damaged in jacking operations shall be repaired, if approved by the Engineer, or removed and replaced at Contractor's own expense.

I. Lengths of casing pipe, as long as practical, shall be used except as restricted otherwise. Joints between casing pipe sections shall be butt joints with complete joint penetration, single groove welds, for the entire joint circumference, in accordance with AWS recommended procedures. Prior to welding the joints, the Contractor shall ensure that both ends of the casing sections being welded are square.

J. The Contractor shall prepare a contingency plan which will allow the use of a casing lubricant, such as bentonite, in the event excessive frictional forces jeopardize the successful completion of the casing installation.

K. Once the jacking procedure has begun, it should be continued without stopping until completed, subject to weather and conditions beyond the control of the Contractor.

L. Care shall be taken to ensure that casing pipe installed by boring and jacking method will be at the proper alignment and grade.

M. The Contractor shall maintain and operate pumps and other necessary drainage system equipment to keep work dewatered at all times.

N. Adequate sheeting, shoring and bracing for embankments, operating pits and other appurtenances shall be placed and maintained to ensure that work proceeds safely and expeditiously. Upon completion of the required work, the sheeting, shoring and bracing shall be left in place, cut off or removed, as designated by the Engineer.

O. Trench excavation, all classes and type of excavation, the removal of rock, muck, debris, the excavation of all working pits and backfill requirements of Section 02225 are included under this Section.

P. All surplus material shall be removed from the right-of-way and the excavation finished flush with the surrounding ground.

Q. Grout backfill shall be used for unused holes or abandoned pipes.

R. Any replacement of carrier pipe in an existing casing shall be considered a new installation, subject to the applicable requirements of these Specifications.

3.06 Free Boring

A. Where ordered by the Engineer, the Contractor shall install the pipe by the free bore method. The allowed free bore method will be dry auger boring, without jetting, sluicing, or wet boring.

B. The diameter of the free bore shall not exceed the pipe bell outside diameter or the pipe barrel outside diameter plus 1-inch, whichever is greater.

C. The Contractor shall be responsible for any settlement of the surface (roadway, driveway, or otherwise) caused by the free bore construction activities.

D. Where ordered to use the free bore method to install a segment of pipe, the Contractor may elect to install the pipe by the conventional bore and jack casing method instead.

E. If the Contractor elects to free bore, and an acceptable installation does not result for any reason, the Contractor shall install a casing pipe by the bore and jack method at no additional cost to the Owner.

F. The Contractor may elect to free bore other portions of the project in lieu of open cut installation. However, no additional payment for free bore will be made if the Contractor exercises this option.

3.07 Directional Drilling

A. Where ordered by the Engineer, the Contractor shall install the pipe by directional drilling. The directional drilling construction method consists of drilling a small diameter pilot hole within the designated tolerances followed by enlargement of the hole to accommodate the ductile iron pipeline to be installed.

B. The contractor shall provide all materials and equipment required, including but not limited to drilling equipment, water pumps, hoses, fittings, storage tanks, filters, hay bales, silt fences, drilling fluids including containment, collection, cleaning and disposal of, fuel and lubricants, bentonite and related mixing equipment, hydrostatic testing equipment and materials, sidebooms, cranes, backhoes, trucks, and other equipment or materials necessary to load and unload pipe, and to support and smoothly transition the pipe while being pulled into the reamed hole.

C. The Contractor shall submit to the Engineer a detailed installation plan including operational sequences, details of the guidance or grade and alignment control system, and a plan and profile of the bore path. The bore path shall ensure that the pipe joints do not deflect more than 50 percent of the manufacturer's recommended maximum deflection for ductile iron pipe.

D. The drilling operation shall be conducted in a manner to eliminate the discharge of water, drilling mud, and cuttings to areas not involved in the construction process. The Contractor shall immediately contain and clean-up any inadvertent returns. The Contractor shall also provide equipment and procedures to maximize the recirculation or reuse of drilling mud to minimize waste disposal. Proper disposal of water, drilling fluids, drilling mud, cuttings and muck is the Contractor's responsibility.

E. Ductile iron pipe and fittings, inspection and testing shall be as specified in Section 02665.

3.08 Ventilation and Air Quality

Provide, operate and maintain for the duration of casing project a ventilation system to meet safety and OSHA requirements.

3.09 Rock Excavation

A. In the event that rock is encountered during the installation of the casing pipe which, in the opinion of the Engineer, cannot be removed through the casing, the Engineer may authorize the Contractor to complete the crossing by a method established in a change directive.

B. At the Contractor's option, the Contractor may continue to install the casing and remove the rock through the casing at no additional cost to the Owner.

3.10 Installation of Pipe

A. After construction of the casing is complete, and has been accepted by the Engineer, install the pipeline in accordance with the Drawings and Specifications.

B. Check the alignment and grade of the casing and prepare a plan to set the pipe at proper alignment, grade and elevation, without any sags or high spots.

C. The carrier pipe shall be held in the casing pipe by one of the following methods:

1. The carrier pipe shall be held in the casing pipe by the use of hardwood blocks spaced radially around the pipe and secured together so that they remain firmly in place. The spacing of such blocks longitudinally in the casing pipe shall not be greater than 10 feet.

2. The pipe shall be supported within the casing by use of casing spacers sized to limit radial movement to a maximum of 1-inch. Provide a minimum of two casing spacers per nominal length of pipe. Casing spacers shall be attached to the pipe at maximum 9 to 10 foot intervals.

D. Fill the void between the carrier pipe and casing pipe with grout. Measures shall be taken by the Contractor to prevent floatation and other movement of the pipe as the grout is filling the void.

E. Close the ends of the casing with 4-inch brick walls.

3.11 Sheeting Removal

Remove sheeting used for shoring from the shaft and off the job site. The removal of sheeting, shoring and bracing shall be done in such a manner as not to endanger or damage either new or existing structures, private or public properties and also to avoid cave-ins or sliding in the banks.

END OF SECTION

Part 1 General

1.01 Scope

A. The extent of pavement patching consists of the repair of all pavement removed or damaged in the course of constructing the Project.

B. Pavement patching includes repair of paved roads, streets, highways, walkways, driveways, patios, slabs on grade, and parking lots together with walls, curbing, gutters and headers, and other pavements and appurtenances. Pavement referred to under this Section, refers to asphaltic, cementious, brick, cobble or other large stone pavement materials together with underlying construction, irrespective of its composition.

1.02 Job Conditions

A. Traffic Control: Schedule and conduct Work in a manner which will minimize inconvenience to vehicular and pedestrian traffic. Provide flaggers, barricades, warning signs, warning lights, and other warning means as appropriate.

B. Weather Limitations: Conduct all operations during weather conditions appropriate to the Work being performed.

C. Grade Control: Establish and maintain lines and elevations which will assure finished pavement patch having desirable appearance, function and strength.

1.03 Submittals

Submit detailed material descriptions when requested by the Engineer.

Part 2 Products

2.01 Materials

A. General: For products not described below, use materials and gradations which have locally exhibited a satisfactory record of previous usage, and which for finished visible surfaces will permit obtaining appearance, color and texture reasonably matching remaining adjacent pavement of the same type.

B. Asphalt Concrete: Bituminous plant mixture of asphalt cement and aggregates complying with Type E or F hot plant mix of Section 828 of the Georgia Department of Transportation "Standard Specifications for Road and Bridge Constructions".

C. Graded Aggregate Base: Uniform graded aggregate material complying with Section 815 of the Georgia Department of Transportation "Standard Specifications for Road and Bridge Construction".

D. Bituminous Prime: Cutback asphalt complying with Section 821 of the Georgia Department of Transportation "Standard Specifications for Road and Bridge Construction".

E. Bituminous Tack Coat: Asphalt material complying with Section 413, topics 413.01 through 413.04 of the Georgia Department of Transportation "Standard Specifications for Road and Bridge Construction".

F. Portland Cement Concrete: Concrete mix of Portland cement, aggregates, water, and air entraining admixture to produce the following properties: 3500 psi minimum compressive strength at 28 days per ASTM C39, 4 inches maximum slump per ASTM C143, and air content between 3% and 6%.

G. Cold Mix: Uniform bituminous mixture of aggregate, asphaltic material and, if it is required, mineral filler complying with Type E or F cold mix of Section 401 of the Georgia Department of Transportation "Standard Specifications for Road and Bridge Construction".

Part 3 Execution

3.01 Pavement Cuts

Saw cut trench edges in paved areas to neat, straight lines before starting to break the pavement slab. Completely backfill the open half before opening the other half of pavement.

3.02 Backfill Placement

Place trench backfill materials in layers not more than six inches compacted thickness. Commence backfill immediately after utility is installed. Complete new replacement base construction immediately after trench backfill.

3.03 Inspection

Examine areas and conditions under which pavement patching will be conducted, giving special attention to stability of subbase. Do not proceed with pavement patching work until unsatisfactory conditions have been corrected.

3.04 Preparation

Saw cut any ragged edges of existing pavement, or in the case of concrete work, remove existing pavement to nearest joint. Remove all loose material from underlying and adjacent surfaces.

3.05 Strength and Stability

Use materials and construction techniques as necessary to obtain strength, stability and durability of pavement patch at least equal to that of remaining adjacent pavement of the same type. As a minimum, conform with pavement patch details, if any, required elsewhere by the Contract Documents; and where such details are not provided, accomplish pavement patching utilizing strengths, thicknesses, etc. not less than that of remaining adjacent pavement of the same type.

3.06 Placing

A. Construct pavement using methods and equipment in general use for the type of work being performed.

B. Immediately after new base construction, cover pavement cut with steel plates or similar devices of sufficient thickness to span the cut without noticeable deflection. Maintain plates in place for not less than 24 hours and not more than 7 days and until the concrete base (if used) has gained sufficient strength to withstand traffic loads. Traffic may resume after installation of metal plates.

C. Upon removal of the metal plates or similar devices, provide new pavement surface in accordance with one of the following options:

1. Immediately apply new permanent pavement surface materials indicated
or
2. Immediately apply bituminous cold mixture over bond breaker paper over new base. Monitor performance and repair or replace materials regularly to maintain smooth traffic surface until placement of permanent pavement surface materials. At Contractor's time selection prior to substantial completion, remove cold mix and bond breaker paper and provide new permanent pavement surface materials. If performance or maintenance of cold mix patch is unsatisfactory in the opinion of the Owner or Engineer, remove materials and provide new permanent pavement surface materials within 72 hours of notice by the Owner or Engineer.

D. Traffic control devices in lieu of cover plates are permitted for pavement patching longitudinal to the street centerline in excess of 20 feet. Use traffic barricades, warning signs and lights, flagmen, and other means as appropriate to continuously control traffic 24 hours per day. Use devices such that at least 12 feet wide, one-way through traffic access is provided at all times. Upon removal of traffic control devices, install permanent pavement surface.

E. Contractor assumes all responsibility for maintaining repairing and or replacing concrete base that may be damaged during curing period.

F. For existing surface of Portland cement concrete, furnish new Portland cement concrete structure thickness, including base and pavement surface, of not less than eight inches; except for driveways and sidewalks which shall be not less than four inches thick.

G. Provide not less than eight inches thickness of new graded aggregate base for replacement of asphalt concrete pavement at driveways, sidewalks and parking lots.

H. For repair of asphalt concrete pavement, clean base and adjacent surfaces and apply bituminous tack coat or bituminous prime (as appropriate) to such surfaces before placing new asphalt concrete surface.

3.07 Finish

A. Accomplish pavement patching using materials and techniques which result in visible, finished surfaces having appearance, color, and texture reasonably matching remaining adjacent pavement of the same type. Do not permit the finished surface to have dips, objectionable roughness or discontinuity or non-draining areas. Do not create any unsafe pavement condition.

3.08 Repairs

A. If pavement patch or adjacent pavement settles or shows evidence of other distress resulting from the Work, cut pavement out, repair subgrade, and reconstruct patch. Do not place additional pavement material on top of unsatisfactory previously repaired surfaces. At expense of Contractor, repair any pavement which he damages beyond that minimum amount necessary to construct the Work.

END OF SECTION

Part 1 General

1.01 Scope

The work to be performed under this Section shall consist of removing and replacing existing pavement, sidewalks and curbs in paved areas where necessary for construction of sewers, manholes and all other sewer appurtenances and structures.

1.02 Submittals

A. Certificates: Provide certificates stating that materials supplied comply with Specifications. Certificates shall be signed by the asphalt producer and the Contractor.

B. Traffic paint manufacturer's application instructions and a description and other data relative to the Contractor's application equipment and methods shall be submitted to the Engineer for approval.

1.03 Conditions

A. Weather Limitations

1. Apply bituminous prime and tack coats only when the ambient temperature has been at least 55 degrees F for 12 hours immediately prior to application.

2. Do not conduct paving operations when surface is wet or contains excess of moisture which would prevent uniform distribution and required penetration.

3. Construct asphaltic courses only when atmospheric temperature in the shade is above 40 degrees F, when the underlying base is dry and when weather is not rainy.

4. Place base course when air temperature is above 35 degrees F and rising.

B. Grade Control: Establish and maintain the required lines and grades for each course during construction operations.

Part 2 Products

2.01 Materials and Construction

A. Graded Aggregate Base Course: Graded aggregate base course shall be of uniform quality throughout and shall meet the requirements of Section 815.01 of the Georgia Department of Transportation Standard Specifications.

B. Black Base: Black base course shall be of uniform quality throughout and shall conform to the requirements of Section 828 of the Georgia Department of Transportation Standard Specifications.

C. Binder Course: The binder course of all paved roadways shall conform to the requirements of Section 400, Type “B” of the Georgia Department of Transportation Standard Specifications.

D. Surface Course: The surface course for all pavement, including prime or tack coat when required by the Engineer, shall conform to the requirements of Section 400, Type "E" of the Georgia Department of Transportation Standard Specifications.

E. Concrete: Provide concrete and reinforcing for concrete pavement or base courses in accordance with the requirements of the Georgia Department of Transportation Standard Specifications, Section 430. Concrete shall be of the strength classifications shown on the Drawings.

F. Special Surfaces: Where driveways or roadways are disturbed or damaged which are constructed of specialty type surfaces, e.g., brick or stone, these driveways and roadways shall be restored utilizing similar, if not original, materials. Where the nature of these surfaces dictate, a specialty contractor shall be used to restore the surfaces to their previous or better condition. Special surfaces shall be removed and replaced to the limits to which they were disturbed.

2.02 Types of Pavements

A. General: All existing pavement removed, destroyed or damaged by construction shall be replaced with the same type and thickness of pavement as that existing prior to construction, unless otherwise directed by the Engineer. Materials, equipment and construction methods used for paving work shall conform to the Georgia Department of Transportation specifications applicable to the particular type required for replacement, repair or new pavements.

B. Aggregate Base: Aggregate base shall be constructed in accordance with the requirements of Section 310 of the Georgia Department of Transportation Standard Specifications. The maximum thickness to be laid in a single course shall be 6-inches compacted. If the design thickness of the base is more than 6-inches, it shall be constructed in two or more courses of approximate equal thickness. After the material placed has been shaped to line, grade and cross-section, it shall be rolled until the course has been uniformly compacted to at least 100 percent of the maximum dry density when Group 2 aggregate is used, or to at least 98 percent of maximum dry density when Group 1 aggregate is used.

C. Concrete Pavement: Concrete pavement or base courses shall be replaced with concrete. The surface finish of the replaced concrete pavement shall conform to that of the existing pavement. The surface of the replaced concrete base course shall be left rough. The slab depth shall be equivalent to the existing concrete pavement or base course, but in no case less than 6-inches thick. Transverse and longitudinal joints removed from concrete pavement shall be replaced at the same locations and to the same types and dimensions as those removed. Concrete pavements or concrete base courses shall be reinforced.

D. Asphaltic Concrete Base, Binder and Surface Course: Asphaltic concrete base, binder and surface course construction shall conform to Georgia Department of Transportation Standard Specifications, Section 400. The pavement mixture shall not be spread until the designated surface has been previously cleaned and prepared, is intact, firm, properly cured, dry and the tack coat has been applied. Apply and compact the base in maximum layer thickness by asphalt spreader equipment of design and operation approved by the Engineer. After compaction, the black base shall be smooth and true to established profiles and sections.

Apply and compact [binder and] the surface course in a manner approved by the Engineer. Immediately correct any high, low or defective areas by cutting out the course, replacing with fresh hot mix, and immediately compacting to conform and thoroughly bond to the surrounding area.

E. Surface Treatment Pavement: Bituminous penetration surface treatment pavement shall be replaced with a minimum thickness of 1-inch conforming to Section 424, Georgia Department of Transportation Standard Specifications.

F. Gravel Surfaces: Existing gravel road, drive and parking area replacement shall meet the requirements of graded aggregate base course. This surfacing may be authorized by the Engineer as a temporary surface for paved streets until replacement of hard surfaced pavement is authorized.

G. Temporary Measures: During the time period between pavement removal and complete replacement of permanent pavement, maintain highways, streets and roadways by the use of steel running plates anchored to prevent movement. The backfill above the pipe shall be compacted, as specified in Section 02225 of these Specifications, up to the existing pavement surface to provide support for the steel running plates. All pavement shall be replaced within seven calendar days of its removal.

Part 3 Execution

3.01 Locations for Pavement Replacement

Pavement shall be removed and replaced with similar type and thickness as the original pavement, for the entire length of pipe laying and up to required trench width as per details shown on drawings.

3.02 Removing Pavement

A. General: Remove existing pavement as necessary for installing the pipe line and appurtenances.

B. Marking: Before removing any pavement, mark the pavement neatly paralleling pipe lines and existing street lines. Space the marks the width of the trench.

C. Breaking: Break asphalt pavement along the marks using pavement shearing equipment, jack hammers or other suitable tools. Break concrete pavement along the marks by scoring with a rotary saw and breaking below the score by the use of jack hammers or other suitable tools.

D. Machine Pulling: Do not pull pavement with machines until the pavement is completely broken and separated from pavement to remain.

E. Damage to Adjacent Pavement: Do not disturb or damage the adjacent pavement. If the adjacent pavement is disturbed or damaged, remove and replace the damaged pavement.

F. Sidewalk: Remove and replace any sidewalks disturbed by construction for their full width and to the nearest undisturbed joint.

G. Curbs: Tunnel under or remove and replace any curb disturbed by construction to the nearest undisturbed joint.

3.03 Replacing Pavement

A. Preparation of Subgrade: Upon completion of backfilling and compaction of the backfill, arrange to have the compaction tested by an independent testing laboratory approved by the Engineer. After compaction testing has been satisfactorily completed, replace all pavements, sidewalks and curbs removed.

1. The existing street pavement or surface shall be removed along the lines of the work for the allowable width specified for the trench or structure. After the installation of the sewerage or water works facilities and after the backfill has been compacted suitably, the additional width of pavement to be removed, as shown on the Drawings, shall be done immediately prior to replacing the pavement.

2. Trench backfill shall be compacted for the full depth of the trench as specified in Section 02225 of these Specifications.

3. Temporary trench backfill along streets and driveways shall include 6-inches of crushed stone or cherty clay as a temporary surfacing of the trenches. This temporary surface shall be maintained carefully at grade and dust-free by the Contractor until the backfill of the trench has thoroughly compacted in the opinion of the Engineer and permission is granted to replace the street pavement.

4. When temporary crushed stone or chert surface is considered by the Engineer to be sufficient surface for gravel pavement, the surface shall be graded smooth and to an elevation that will make the final permanent surfacing level with the adjacent surfacing that was undisturbed.

B. Pavement Replacement

1. Prior to replacing pavement, make a final cut in concrete pavement 12-inches back from the edge of the damaged pavement with a concrete saw. Remove asphalt pavement 12-inches back from the edge of the damaged pavement using pavement shearing equipment, jack hammers or other suitable tools.

2. Replace all street and roadway pavement as shown on the Drawings. Replace driveways, sidewalks and curbs with the same material, to nearest existing undisturbed construction joint and to the same dimensions as those existing.

3. If the temporary crushed stone or chert surface is to be replaced, the top 6-inches shall be removed and the crushed stone surfacing for unpaved streets or the base for the bituminous surface shall be placed.

4. Following this preparation, the chert or crushed stone base shall be primed with a suitable bituminous material and surfaced with the proper type of bituminous surface treatment.

5. Where the paved surface is to be replaced with asphaltic concrete pavement, concrete pavement or with a concrete base and a surface course, the temporary chert or crushed stone surface and any necessary backfill material, additional existing paving and new excavation shall be removed to the depth and width shown on the Drawings. All edges of the existing pavement shall be cut to a straight, vertical edge. Care shall

be used to get a smooth joint between the old and new pavement and to produce an even surface on the completed street. Concrete base slabs and crushed stone bases, if required, shall be placed and allowed to cure for three days before bituminous concrete surface courses are applied. Expansion joints, where applicable, shall be replaced in a manner equal to the original joint.

6. Where driveways or roadways, constructed of specialty type surfaces, e.g., brick or stone are disturbed or damaged, these driveways and roadways shall be restored utilizing similar materials. Where the nature of these surfaces dictate, a specialty contractor shall be used to restore the surfaces to their previous or better condition. Special surfaces shall be removed and replaced to the limits to which they were disturbed.

C. Pavement Resurfacing: Certain areas to be resurfaced are specified or noted on the Drawings. After all pipe line installations are complete and existing pavement has been removed and the trench route has been repaired, mill entire area to be resurfaced 1-1/2 inches, then apply tack coat and 1-1/2 inches of Type E surface course as specified.. Where pavement to be resurfaced has been damaged with potholes, the Contractor shall remove all existing loose pavement material and fill the hole with black base, as specified, to the level of the existing pavement.

D. Pavement Striping: Pavement striping removed or paved over shall be replaced with the same type, dimension and material as original unless directed otherwise by the Engineer.

3.04 Sidewalk and Curb Replacement

A. Construction

1. All concrete sidewalks and curbs shall be replaced with concrete.

2. Preformed joints shall be 1/2-inch thick, conforming to the latest edition of AASHTO M59 for sidewalks and AASHTO M 123 for curbs.

3. Forms for sidewalks shall be of wood or metal, shall be straight and free from warp, and shall be of sufficient strength, when in place, to hold the concrete true to line and grade without springing or distorting.

4. Forms for curbs shall be metal and of an approved section. They shall be straight and free from distortions, showing no vertical variation greater than 1/8-inch in 10 feet and no lateral variation greater than 1/4-inch in 10 feet from the true plain surface on the vertical face of the form. Forms shall be of the full depth of the structure and constructed such to permit the inside forms to be securely fastened to the outside forms.

5. Securely hold forms in place true to the lines and grades indicated on the Drawings.

6. Wood forms may be used on sharp turns and for special sections, as approved by the Engineer. Where wooden forms are used, they shall be free from warp and shall be the nominal depth of the structure.

7. All mortar and dirt shall be removed from forms and all forms shall be thoroughly oiled or wetted before any concrete is deposited.

B. When a section is removed, the existing sidewalk or curb shall be cut to a neat line, perpendicular to both the centerline and the surface of the concrete slab. Existing concrete shall be cut along the nearest existing construction joints; if such joints do not exist, the cut shall be made at minimum distances shown on the Drawings.

C. Existing concrete sidewalks and curbs that have been cut and removed for construction purposes shall be replaced with the same width and surface as the portion removed. Sidewalks shall have a minimum uniform thickness of 4-inches. The new work shall be neatly jointed to the existing concrete so that the surface of the new work shall form an even, unbroken plane with the existing surfaces.

D. The subgrade shall be formed by excavating to a depth equal to the thickness of the concrete, plus 2-inches. Subgrade shall be of such width as to permit the proper installation and bracing of the forms. Subgrades shall be compacted by hand tamping or rolling. Soft, yielding or unstable material shall be removed and backfilled with satisfactory material. Place 2-inches of porous crushed stone under all sidewalks and curbs and compacted thoroughly, then finish to a smooth, unyielding surface at proper line, grade and cross section.

E. Joint for Curbs

1. Joints shall be constructed as indicated on the Drawings and as specified. Construct joints true to line with their faces perpendicular to the surface of the structure and within 1/4-inch of their designated position.

2. Thoroughly spade and compact the concrete at the faces of all joints filling all voids.

3. Install expansion joint materials at the point of curve at all street returns. Install expansion joint material behind the curb at abutment to sidewalks and adjacent structures.

4. Place contraction joints every 10 feet along the length of the curbs and gutters. Form contraction joints using steel templates or division plates which conform to the cross section of the structure. Leave the templates in place until the concrete has set sufficiently to hold its shape, but remove them while the forms are still in place. Contraction joint templates or plates shall not extend below the top of the steel reinforcement or they shall be notched to permit the reinforcement to be continuous through the joint. Contraction joints shall be a minimum of 1-1/2-inches deep.

F. Expansion joints shall be required to replace any removed expansion joints or in new construction wherever shown on the Drawings. Expansion joints shall be true and even, shall present a satisfactory appearance, and shall extend to within 1/2-inch of the top of finished concrete surface.

G. Finishing

1. Strike off the surface with a template and finish the surface with a wood float using heavy pressure, after which, contraction joints shall be made and the surface finished with a wood float or steel trowel.

2. Finish the face of the curbs at the top and bottom with an approved finishing tool of the radius indicated on the Drawings.

3. Finish edges with an approved finishing tool having a 1/4-inch radius.

4. Provide a final broom finish by lightly combing with a stiff broom after troweling is complete.

5. The finished surface shall not vary more than 1/8-inch in 10 feet from the established grade.

H. Driveway and Sidewalk Ramp Openings

1. Provide driveway openings of the widths and at the locations indicated on the Drawings and as directed by the Engineer.

2. Provide sidewalk ramp openings as indicated on the Drawings, in conformance with the applicable regulations and as directed by the Engineer.

I. Concrete shall be suitably protected from freezing and excessive heat. It shall be kept covered with burlap or other suitable material and kept wet until cured. Provide necessary barricades to protect the work. All damage caused by people, vehicles, animals, rain, the Contractor's operations and the like shall be repaired by the Contractor, at no additional expense to the Owner.

3.05 Maintenance

The Contractor shall maintain the surfaces of roadways built and pavements replaced until the acceptance of the Project. Maintenance shall include replacement, scraping, reshaping, wetting and rerolling as necessary to prevent raveling of the road material, the preservation of reasonably smooth surfaces and the repair of damaged or unsatisfactory surfaces, to the satisfaction of the Engineer. Maintenance shall include sprinkling as may be necessary to abate dust from the gravel surfaces.

3.06 Supervision and Approval

A. Pavement restoration shall meet the requirements of the regulatory agency responsible for the pavement. Obtain agency approval of pavement restorations before requesting final payment.

B. Obtain the Engineer's approval of restoration of pavement, such as private roads and drives, that are not the responsibility of a regulatory agency.

C. Complete pavement restoration as soon as possible after backfilling.

D. Failure of Pavement: Should any pavement restoration or repairs fail or settle during the life of the Contract, including the bonded period, promptly restore or repair defects.

3.07 Cleaning

The Contractor shall remove all surplus excavation materials and debris from the street surfaces and rights-of-way and shall restore street, roadway or sidewalk surfacing to its original condition.

END OF SECTION

Part 1 General

1.01 Scope

A. This Section describes products to be incorporated into the water mains and requirements for the installation and use of these items. Furnish all products and perform all labor necessary to fulfill the requirements of these Specifications.

B. Supply all products and perform all work in accordance with applicable American Society for Testing and Material (ASTM), American Water Works Association (AWWA), American National Standards Institute (ANSI), or other recognized standards. Latest revisions of all standards are applicable.

1.02 Qualifications

If requested by the Engineer, submit evidence that manufacturers have consistently produced products of satisfactory quality and performance for a period of at least two years.

1.03 Submittals

Complete shop drawings, product data and engineering data for all products shall be submitted to the Engineer in accordance with the requirements of Section 01340 of these Specifications.

1.04 Transportation and Handling

A. Unloading: Furnish equipment and facilities for unloading, handling, distributing and storing pipe, fittings, valves and accessories. Make equipment available at all times for use in unloading. Do not drop or dump materials. Any materials dropped or dumped will be subject to rejection without additional justification. Pipe handled on skids shall not be rolled or skidded against the pipe on the ground.

B. Handling: Handle pipe, fittings, valves and accessories carefully to prevent shock or damage. Handle pipe by rolling on skids, forklift, or front end loader. Do not use material damaged in handling. Slings, hooks or pipe tongs shall be padded and used in such a manner as to prevent damage to the exterior coatings or internal lining of the pipe.

1.05 Storage and Protection

A. Store all pipe which cannot be distributed along the route. Make arrangements for the use of suitable storage areas.

B. Stored materials shall be kept safe from damage. The interior of all pipe, fittings and other appurtenances shall be kept free from dirt or foreign matter at all times. Valves and hydrants shall be drained and stored in a manner that will protect them from damage by freezing.

C. Pipe shall not be stacked higher than the limits recommended by the manufacturer. The bottom tier shall be kept off the ground on timbers, rails or concrete. Pipe in tiers shall be alternated: bell, plain end; bell, plain end. At least two rows of timbers shall be placed between tiers and chocks, affixed to each other in order to prevent movement. The timbers shall be large enough to prevent contact between the pipe in adjacent tiers.

D. Stored mechanical and push-on joint gaskets shall be placed in a cool location out of direct sunlight. Gaskets shall not come in contact with petroleum products. Gaskets shall be used on a first-in, first-out basis.

E. Mechanical-joint bolts shall be handled and stored in such a manner that will ensure proper use with respect to types and sizes.

1.06 Quality Assurance

The manufacturer shall provide written certification to the Engineer that all products furnished comply with all applicable requirements of these Specifications.

Part 2 Products

2.01 Ductile Iron Pipe (DIP)

A. Ductile iron pipe shall be manufactured in accordance with AWWA C151 – latest revision. All pipes, except specials, shall be furnished in nominal lengths of 18 to 20 feet. Sizes will be as shown on the Drawings. All pipes shall have a minimum pressure rating as indicated in the following table and corresponding minimum wall thickness, unless otherwise specified or shown on the Drawings:

Pipe Sizes (inches)	Pressure Class (psi)
4 - 12	350
14 - 18	350
20	300
24	250
30 - 54	200
60 - 64	200

B. Flanged pipe minimum wall thickness shall be equal to Special Class 53. Flanges shall be furnished by the pipe manufacturer.

C. Pipe shall be cement lined in accordance with AWWA C104. Pipe shall be furnished with a bituminous outside coating.

D. Certificates of conformance with the foregoing specifications shall be furnished with each lot of pipe supplied.

E. Fittings shall be ductile iron and shall conform to AWWA C110 or AWWA C153 with a minimum rated working pressure of 250 psi. Fittings shall be cement lined in accordance with AWWA C104 and shall be furnished with a bituminous outside coating. In lieu of cement lining and bituminous coating, fittings may be provided with a fusion bonded coating and lining meeting the requirements of AWWA C116.

F. Galvanized pipe fittings and PVC pipe fittings shall not be used as any part of the Fulton County Water Transmission and Distribution System, nor shall it be used to join any appurtenances to the System.

G. Joints

1. Unless shown or specified otherwise, joints shall be push-on or restrained joint type for pipe and standard mechanical, push-on or restrained joints for fittings. Push-on and mechanical joints shall conform to AWWA C111.

2. Restrained joints shall be American “FLEX-RING” or “LOK-RING”, U.S. Pipe “TR FLEX” or “HP LOK”, Clow “SUPER-LOCK”, Griffin “SNAP-LOK” or equal.

3. Restraining gasket joints shall be assembled with American Fast-Grip gaskets or US Pipe FIELD LOK gaskets and may be used for pipe 12-Inches in diameter or less.

4. Retainer glands on a mechanical joint may be used as a restrained joint only where retainer glands are specifically shown on the drawings or where specifically specified.

5. Where retainer glands are allowed, in lieu of retainer glands specified elsewhere, the joint may be assembled with US Pipe MJ FIELD LOK gasket.

6. No field welding for manufactured restrained joint pipe assembly will be permitted. Where field cutting of restrained joint pipe is required, the joint shall be assembled with American Field Flex-Rings or US Pipe TR FLEX GRIPPER Rings.

7. Flanged joints shall meet the requirements of ANSI B16.1, Class 125.

H. Provide the appropriate gaskets for mechanical and flange joints. Gaskets for flange joints shall be made of 1/8-inch thick, cloth reinforced rubber; gaskets and shall be full face type.

I. Bolts and Nuts

1. Provide the necessary bolts for connections. All bolts and nuts shall be threaded in accordance with ANSI B1.1, Coarse Thread Series, Class 2A external and 2B internal fit. All bolts and nuts shall be made in the U.S.A.

2. Bolts and nuts for mechanical joints shall be Tee Head Bolts and nuts of high strength low-alloy steel in accordance with ASTM A 242 to the dimensions shown in AWWA C111/ANSI A21.11.

3. Flanged joints shall be bolted with through stud or tap bolts of required size as directed. Bolt length and diameter shall conform to ANSI/AWWA C115 for Class 125 flanges shown in ANSI/ASME B16.1.

4. Bolts for exposed service shall be zinc plated, cold pressed, steel machine bolts conforming to ASTM A 307, Grade B. Nuts for exposed service shall be zinc plated, heavy hex conforming to ASTM A 563. Zinc plating shall conform to ASTM B 633, Type II.

5. Bolts for submerged service shall be stainless steel machine bolts conforming to ASTM A 193, Grade B8. Nuts shall be heavy hex, stainless steel conforming to ASTM A 194, Grade 8.

J. Mechanical joint glands shall be ductile iron.

K. Restrained joint pipe (RJP) on supports shall have bolted joints and shall be specifically designed for clear spans of at least 36 feet.

L. Thrust collars shall be welded-on ductile iron body type or split retainer gland type, as shown on the Drawings or directed by the Engineer, designed to withstand thrust due to 250 psi internal pressure on a dead end.

M. Tapping Saddles: Tapping saddles are not allowed.

N. Pipe outlets shall be welded-on ductile iron pipe and shall be provided in lieu of tees or saddles on mains with a diameter greater than or equal to 24-inches. Outlets shall be plain end, push-on, mechanical, or flanged joint, and shall meet the joint requirements stated in this Specification. All welding, fabrication and outlet hole drilling shall be performed by the manufacturer of the parent pipe. Outlets shall be free of burrs. Sizes shall be as indicated on the Drawings. The outlets and parent pipe shall be minimum Class 53 ductile iron pipe for parent pipe 54-inches and smaller. For pipe larger than 54-inches, parent pipe shall be Pressure Class 350. Each welded outlet shall be rated for 250 psi working pressure and hydrostatically tested at 500 psi. The maximum outlet diameters shall not exceed those listed in the table below:

Parent Pipe Diameter, Inches	Maximum Outlet Diameter, Inches
24	16
30	20
36	24
42	30
48	30
54	30
60	30
64	30

O. Acceptance will be on the basis of the Engineer's inspection and the manufacturer's written certification that the pipe was manufactured and tested in accordance with the applicable standards.

2.02 Copper Pipe

A. Pipe shall be rolled copper tubing, ASTM B 88, Type K. Fittings shall be sweat type wrought copper, ANSI B16.22.

B. Where required, sweat to screw adapters shall be cast bronze ANSI B16.18, wrought solder joint ANSI B16.22. Unions shall be cast bronze or bronze with solder connections. Joints shall be made with 95/5 solder for Type K pipe.

2.03 Valves

A. Gate Valves (GV): 6-Inches to 12-Inches in Diameter

1. Gate valves shall be resilient wedge type conforming to the requirements of AWWA C509 or AWWA C515 rated for 250 psi working pressure.

2. Valves shall be provided with two O-ring stem seals with one O-ring located above and one O-ring below the stem collar. The area between the O-rings shall be filled with lubricant to provide lubrication to the thrust collar bearing surfaces each time the valve is operated. At least one anti-friction washer shall be utilized to further minimize operating torque. All seals between valve parts, such as body and bonnet, bonnet and bonnet cover, shall be flat gaskets or O-rings.

3. The valve gate shall be made of cast or ductile iron having a vulcanized, synthetic rubber coating, or a seat ring attached to the disc with retaining screws. Sliding of the rubber on the seating surfaces to compress the rubber will not be allowed. The design shall be such that compression-set of the rubber shall not affect the ability of the valve to seal when pressure is applied to either side of the gate. The sealing mechanism shall provide zero leakage at the water working pressure when installed with the line flow in either direction.

4. All internal ferrous surfaces shall be coated with epoxy to a minimum thickness of 4 mils. The epoxy shall be non-toxic, impart no taste to the water and shall conform to AWWA C550.

5. Valves shall be non-rising stem type with a 2-inch square wrench nut, except in meter vaults where hand wheels shall be installed, and shall open left. The manufacturer shall provide an affidavit of compliance with the applicable AWWA standards.

6. Gate valves shall be manufactured by American Flow Control, Mueller or M & H Valve.

B. Butterfly Valves (BV) 16-Inches to 24-Inches in Diameter

1. Butterfly valves shall be resilient seated, short body design, and shall be designed, manufactured, and tested in accordance with all requirements of AWWA C504 and as modified below. Valves shall be designed for a rated working pressure of 250 psi. Class B, AWWA C504 Section 5.2 testing requirements are modified as follows:

a. The leakage test shall be performed at a pressure of 250 psi;

b. The hydrostatic test shall be performed at a pressure of 500 psi; and

c. Proof of design tests shall be performed and certification of such proof of design test shall be provided to the Engineer.

2. Valve bodies shall be ductile iron conforming to ASTM A 536, Grade 65-45-12 or ASTM A 126, Grade B cast iron. Shafts and shaft hardware shall be ASTM A 564, Type 630 stainless steel, machined and polished. Valve discs shall be ductile iron, ASTM A 536, Grade 65-45-12. The resilient valve seat shall be located either on the valve disc or in the valve body and shall be fully field adjustable and field replaceable.

3. Valves shall be installed with the valve shafts horizontal. Valves and actuators shall have seals on all shafts and gaskets on valve actuator covers to prevent the entry of water. Actuator mounting brackets shall be totally enclosed and shall have gasket seals.

4. Actuators

   a. Valves shall be equipped with traveling nut, self-locking type actuators designed, manufactured and tested in accordance with AWWA C504. Actuators shall be capable of holding the disc in any position between full open and full closed without any movement or fluttering of the disc.

   b. Actuators shall be furnished with fully adjustable mechanical stop-limiting devices. Actuators that utilize the sides of the actuator housing to limit disc travel are unacceptable.

   c. Valve actuators shall be capable of withstanding a minimum of 450 foot pounds of input torque in either the open or closed position without damage.

5. Operators: Valves for buried service shall have a 2-inch square wrench nut type operator and shall be equipped with a valve box and stem extension, as required and shall open left.

6. Valve ends shall be mechanical joint type, except where joint ends are shown. Flange joints shall meet the requirements of ANSI B16.1, Class 250, but drilled and faced to Class 125 dimensions.

7. Butterfly valves shall be manufactured by Mueller, M & H Valve, DeZurik, Val-Matic, or Pratt.

2.04 Fire Hydrants (FH)

A. All fire hydrants shall conform to the requirements of AWWA C502 for 150 psi working pressure. Hydrants shall be the compression type, closing with line pressure. The valve opening shall not be less than 5-1/4-inches.

B. In the event of a traffic accident, the hydrant barrel shall break away from the standpipe at a point above grade and in a manner which will prevent damage to the barrel and stem, preclude opening of the valve, and permit rapid and inexpensive restoration without digging or cutting off the water.

C. The means for attaching the barrel to the standpipe shall permit facing the hydrant a minimum of eight different directions.

D. Hydrants shall be fully bronze mounted with all working parts of bronze. Valve seat ring shall be bronze and shall screw into a bronze retainer.

E. All working parts, including the seat ring shall be removable through the top without disturbing the barrel of the hydrant.

F. The operating nut shall match those on the existing hydrants and shall open left. The operating threads shall be totally enclosed in an operating chamber, separated from the hydrant barrel by a rubber O-ring stem seal and lubricated by a grease or an oil reservoir.

G. Hydrant shall be a non-freezing design and be provided with a simple, positive, and automatic drain which shall be fully closed whenever the main valve is opened.

H. Hose and pumper connections shall be breech-locked, pinned, or threaded and pinned to seal them into the hydrant barrel. Each hydrant shall have two 2-1/2-inch hose connections and one 4-1/2-inch pumper connection, all with National Standard threads and each equipped with cap and non-kinking chain.

I. Hydrants shall be furnished with a mechanical joint connection to the spigot of the 6-inch hydrant lead.

J. Minimum depth of bury shall be 4.5 feet. Provide extension section where necessary for proper vertical installation and in accordance with manufacturer's recommendations.

K. All outside surfaces of the barrel above grade shall be painted silver with Sherwin Williams KEM 400. The bonnet of hydrants installed on a 12 inch water main shall be painted Yellow; the bonnet of hydrants installed on water mains larger than 12 inch water mains shall be painted Green.

L. Hydrants shall be traffic model and shall be American Flow Control B-84-B, Mueller Super Centurion, M & H Valve 929, or US Pipe Metropolitan 250 Model M94.

2.05 Valve Boxes (VB) and Extension Stems

A. All valves shall be equipped with valve boxes. The valve boxes shall be cast iron two-piece screw type with drop covers. Valve boxes shall have a 5.25-inch inside diameter. Valve box covers shall weigh a minimum of 13 pounds. The valve boxes shall be adjustable to 6-inches up or down from the nominal required cover over the pipe. Valve boxes shall be of sufficient length that bottom flange of the lower belled portion of the box is below the valve operating nut. Ductile or cast iron extensions shall be provided as necessary. Covers shall have “WATER VALVE” or “WATER” cast into them. Valve boxes shall be manufactured in the United States.

B. All valve boxes shall have a concrete collar, minimum 9-inches thick. The collar shall be square or round and sized 24-inches square or 24-inches in diameter. Precast collars may be used, provided that they are grouted in place to the valve box. The box is to be flush with finished grade. The edge of the valve box is to be ½-inch above the edge of the concrete collar.

C. All valves shall be furnished with Type 316 stainless steel extension stems, as necessary, to bring the operating nut to within 24-inches of the top of the valve box. Connection to the valve shall be with a wrench nut coupling and a set screw to secure the coupling to the valve's operating nut. The coupling and square wrench nut shall be welded or pinned to the extension stem and shall have a

centering ring. Extension stems shall be minimum 1-inch diameter. Extension stems shall be equal to Trumbull Industries, M & H Valve, or Penn-Troy Manufacturing/Troy Valve.

2.06 Valve Markers (VM)

The Contractor shall provide a concrete valve marker as detailed on the Drawings for each valve installed outside paved areas. Valve markers shall be stamped “WATER”. Valve markers shall be in accordance with County standards. In addition to concrete valve marker where street curbs are installed a saw cut ½” deep “V” notch on top of curb adjacent to water valve location is required.

2.07 Tapping Sleeves and Valves (TS&V)

Tapping sleeves shall be cast or ductile iron of the split-sleeve, mechanical joint type and shall be capable of withstanding a working pressure of 250 psi. The Contractor shall be responsible for determining the outside diameter of the pipe to be connected to prior to ordering the sleeve. Valves shall be gate valves furnished in accordance with the specifications shown above, with flanged connection to the tapping sleeve and mechanical joint connection to the branch pipe. The tapping sleeve shall be supplied by the valve manufacturer. Tapping sleeves shall be equal to American Flow Control, Mueller H-615 or M & H Valve.

2.08 Corporation Cocks and Curb Stops

Corporation cocks and curb stops shall be ball type, shall be made of bronze conforming to ASTM B 61 or B 62, and shall be suitable for the working pressure of the system. Ends shall be suitable for compression type joint. Threaded ends for inlet and outlet of corporation cocks shall conform to AWWA C800; coupling nut for connection to flared copper tubing shall conform to ANSI B16.26. Corporation cocks shall be manufactured by Ford (FB1000-4-G) or equivalent. Curb stops shall be manufactured by Ford (BA21-444W-Full Port) or equivalent.

2.09 Air Valves for Water Service

A. The air release and vacuum break valve shall be of the compact single chamber design with solid cylindrical HDPE control floats housed in a tubular stainless steel body with epoxy powder coated cast iron or steel ends secured by means of stainless steel tie rods. The valve shall have an integral "anti-shock" orifice mechanism which shall operate automatically to limit transient pressure rise or shock induced by closure to two times valve rated working pressure. The intake orifice area shall be equal to the nominal size of the valve.

B. Large orifice sealing shall be affected by the flat face of the control float seating against a nitrile rubber O-ring housed in a dovetail groove circumferentially surrounding the orifice. Discharge of pressurized air shall be controlled by the seating and unseating of a small orifice nozzle on a natural rubber seal affixed into the control float. The nozzle shall have a flat seating land surrounding the orifice so that the damage to the rubber seal is prevented.

C. The valve construction shall be proportioned with regard to material strength characteristics, so that deformation, leaking or damage of any kind does not occur by submission to twice the designed working pressure. The valve design shall incorporate an over pressure safety feature that will fail without an explosive effect, such as is normally the case when highly compressed air is released suddenly. The feature shall consist of replaceable components such as gaskets or seals.

D. Connection to the valve inlet shall be facilitated by a flanged end conforming to ANSI B16.1 Class 125. Flanged ends shall be supplied with the requisite number of stainless steel or mild steel screwed studs inserted for alignment to the specific standard.

E. Valve orifice size shall be as shown on the Drawings.

F. Provide a 1/4-inch NPT test/bleed cock.

G. An isolation valve between the main and the air valve shall be installed in accordance with the Drawings.

H. All air valves and accessories shall be equal to Vent-o-Mat.

2.10 Manholes and Precast Concrete Products

A. Precast Concrete Sections

1. Precast concrete sections shall meet the requirements of ASTM C 478 for round shaped and ASTM C 913 for rectangular shaped precast concrete products. The minimum compressive strength of the concrete in precast sections shall be 4,000 psi. The minimum wall thickness shall be one-twelfth of the inside diameter of the base, riser or the largest cone diameter.

2. Transition slabs which convert bases larger than four feet in diameter to four foot diameter risers shall be designed by the precast concrete manufacturer to carry the live and dead loads exerted on the slab.

3. Seal joints between precast sections by means of rubber O-ring gaskets or flexible butyl rubber sealant. Butyl rubber sealants shall meet the requirements of AASHTO M-198. Sealant shall be pre-formed type with a minimum nominal diameter of 1-inch.

4. Butyl rubber sealant shall be equal to Kent Seal No. 2 or Concrete Sealants CS 202.

B. Brick and Mortar: Brick shall be whole and hardburned, conforming to ASTM C 32, Grade MS. Mortar shall be made of one part Portland cement and two parts clean sharp sand. Cement shall be Type 1 and shall conform to ASTM C 150. Sand shall meet ASTM C 144.

C. Iron Castings

1. Cast iron manhole frames, covers and steps shall meet the requirements of ASTM A 48 for Class 30 gray iron and all applicable local standards. All castings shall be tough, close grained, smooth and free from blow holes, blisters, shrinkage, strains, cracks, cold shots and other imperfections. No casting will be accepted which weighs less than 95 percent of the design weight. Shop drawings must indicate the design weight and provide sufficient dimensions to permit checking. All castings shall be thoroughly cleaned in the shop and given two coats of approved bituminous paint before rusting begins.

2. Manhole frames and covers shall be equal to the following:

Type	Design Weight	Manufacturer's Reference	
Bolt Down	400#	Neenah A-1916-F1	Vulcan V-2358

3. All frames and covers shall have machined horizontal bearing surfaces.

4. Bolt-down covers shall be equipped with four 1/2-inch stainless steel bolts and a 1/8-inch red rubber or rubber O-ring gasket. Covers shall be rotatable and interchangeable. Bolt holes shall be bored through so that debris entering the bolt hole will fall into the manhole. Bolt holes shall have the full 360 degree circle within the cover's radius when bored through the cover.

D. Plastic Steps: Manhole steps of polypropylene, molded around a steel rod, equal to products of M.A. Industries may be used.

E. Floor Door

1. Door shall be single or double leaf type as shown on the Drawings.

2. The frame shall be 1/4-inch extruded aluminum alloy 6063-T6, with built-in neoprene cushion and with strap anchors bolted to the exterior. Door leaf shall be 1/4-inch aluminum diamond plate, alloy 6061-T6, reinforced with aluminum stiffeners as required. Stainless steel hinges shall be bolted to the underside and pivot on torsion bars that counterbalance the door for easy operation. The door shall open to 90 degrees and lock automatically in that position. A vinyl grip handle shall be provided to release the cover for closing. The door shall be built to withstand a live load of 300 pounds per square foot, and shall be equipped with a snap lock and removable handle. Bituminous coating shall be applied to exterior of frame by the manufacturer. The door shall also be provided with a hasp in addition to the built-in locking mechanism.

3. The floor door shall be manufactured by The Bilco Company or Thompson Fabricating Company.

F. Vents

1. Where vent pipes are shown on the Drawings, vents shall be of one-piece, welded steel construction. Vent pipes shall equal air valve size, but no less than 4-inches. The vent pipe shall be grouted into a precast hole in the vault. The discharge of the vent pipe shall be provided with a 3/16-inch PVC coated mesh screen.

2. Where vent pipes are not shown on the Drawings, the frame and cover or floor door shall be provided with 1-inch holes to provide equivalent opening as in air valve, but not less than two. The quantity for each valve size is as follows: 2-inch, 4; 3-inch, 9; 4-inch, 16; 6-inch, 36; 8-inch, 64.

2.11 Retainer Glands

A. Retainer glands for ductile iron pipe shall be Megalug Series 1100, as manufactured by EBAA Iron, Uni-Flange Series 1400, as manufactured by Ford Meter Box Company, Stargrip Series 3000, as manufactured by Star Pipe Products, or Sigma One LOK Series SLD as manufactured by Nappco-Sigma.

B. Retainer glands shall be provided at all mechanical joints, including fittings, valves, hydrants and other locations as shown on the Drawings.

2.12 Hydrant Tees

Hydrant tees shall be equal to ACIPCO A10180 or U.S. Pipe U-592.

2.13 Anchor Couplings

Lengths and sizes shall be as shown on the Drawings. Anchor couplings shall be equal to ACIPCO A 10895 or U.S. Pipe U-591.

2.14 Hydrant Connector Pipe

The connector pipe shall be ductile iron meeting the requirements of AWWA C153 and shall be cement lined in accordance with AWWA C104. The pipe shall have a 24-inch offset design so the hydrant can be adjusted to ensure placement at the proper grade and shall have an anchoring feature at both ends so that when used with mechanical joint split glands, a restrained joint is provided. The connector pipe shall be Gradelok as manufactured by Assured Flow Sales, Inc., Sarasota, Florida.

2.15 Concrete

Concrete shall have a compressive strength of not less than 3,000 psi, with not less than 5.5 bags of cement per cubic yard and a slump between 3 and 5-inches. For job mixed concrete, submit the concrete mix design for approval by the Engineer. Ready-mixed concrete shall be mixed and transported in accordance with ASTM C 94. Reinforcing steel shall conform to the requirements of ASTM A 615, Grade 60. Concrete for thrust blocking and thrust collars shall be high early strength concrete.

2.16 Electronic Markers

Electronic markers shall be buried with utilities to serve as a locating device. Electronic markers shall be the active, programmable type. Each marker shall be color coded in accordance with APWA standards and produce an industry specific frequency. Each marker shall contain a passive antenna that requires no internal power source. Markers shall be of water resistant polyethylene shells and impervious to minerals, chemicals, and underground temperature extremes. Electronic markers shall be compatible with 3M Dynatel 1420 EMS-ID Marker Locator. Contractor shall supply one Marker Locator for use during installation and shall turn over Locator to County upon project completion. Markers shall be 3M Dynatel 1423 XR/ID for water service.

Part 3 Execution

3.01 Existing Utilities and Obstructions

A. The Drawings indicate utilities or obstructions that are known to exist according to the best information available to the County. The Contractor shall call the Utilities Protection Center (UPC) (800-282-7411) as required by Georgia law (Code Section 25-9-1 through 25-9-13) and all utilities, agencies or departments that own and/or operate utilities in the vicinity of the construction work site at least 72 hours (three business days) prior to construction to verify the location of the existing utilities.

B. Existing Utility Location: The following steps shall be exercised to avoid interruption of existing utility service.

1. Provide the required notice to the utility owners and allow them to locate their facilities according to Georgia law. Field utility locations are valid for only 10 days after original notice. The Contractor shall ensure at the time of any excavation that a valid utility location exists at the point of excavation.

2. Expose the facility, for a distance of at least 200 feet in advance of pipeline construction, to verify its true location and grade. Repair, or have repaired, any damage to utilities resulting from locating or exposing their true location.

3. Avoid utility damage and interruption by protection with means or methods recommended by the utility owner.

4. Maintain a log identifying when phone calls were made, who was called, area for which utility relocation was requested and work order number issued, if any. The Contractor shall provide the Engineer an updated copy of the log bi-weekly, or more frequently if required.

C. Conflict with Existing Utilities

1. Horizontal Conflict: Horizontal conflict shall be defined as when the actual horizontal separation between a utility, main, or service and the proposed water main does not permit safe installation of the water main by the use of sheeting, shoring, tying-back, supporting, or temporarily suspending service of the parallel or crossing facility. The Contractor may change the proposed alignment of the water main to avoid horizontal conflicts if the new alignment remains within the available right-of-way or easement, complies with regulatory agency requirements and after a written request to and subsequent approval by the Engineer. Where such relocation of the water main is denied by the Engineer, the Contractor shall arrange to have the utility, main, or service relocated.

2. Vertical Conflict: Vertical conflict shall be defined as when the actual vertical separation between a utility, main, or service and the proposed water main does not permit the crossing without immediate or potential future damage to the utility, main, service, or the water main. The Contractor may change the proposed grade of the water main to avoid vertical conflicts if the changed grade maintains adequate cover and complies with regulatory agencies requirements after written request to and subsequent approval by the Engineer. Where such relocation of the water main is denied by the Engineer, the Contractor shall arrange to have the utility, main, or service relocated.

D. Electronic Locator: Have available at all times an electronic pipe locator and a magnetic locator, in good working order, to aid in locating existing pipe lines or other obstructions.

E. Water and Sewer Separation

1. Water mains should maintain a minimum 10 foot edge-to-edge separation from sewer lines, whether gravity or pressure. If the main cannot be installed in the prescribed easement or right-of-way and provide the 10 foot separation, the separation may be reduced, provided the bottom of the water main is a minimum of 18-inches above the top of the sewer. Should neither of these two separation criteria be possible, the water main shall be installed below the sewer with a minimum vertical separation of 18-inches.

2. The water main, when installed below the sewer, shall be encased in concrete with a minimum 6-inch concrete depth to the first joint in each direction. Where water mains cross the sewer, the pipe joint adjacent to the pipe crossing the sewer shall be cut to provide maximum separation of the pipe joints from the sewer.

3. No water main shall pass through, or come in contact with, any part of a sanitary sewer manhole.

3.02 Construction Along Highways, Streets and Roadways

A. Install pipe lines and appurtenances along highways, streets and roadways in accordance with the applicable regulations of, and permits issued by, the Department of Transportation and Fulton County with reference to construction operations, safety, traffic control, road maintenance and repair.

B. Traffic Control

1. The Contractor shall provide, erect and maintain all necessary barricades, suitable and sufficient lights and other traffic control devices; provide qualified flagmen where necessary to direct traffic; take all necessary precautions for the protection of the work and the safety of the public. Flagmen shall be certified by a Georgia DOT approved training program.

2. Construction traffic control devices and their installation shall be in accordance with the current Manual On Uniform Traffic Control Devices for Streets and Highways.

3. Placement and removal of construction traffic control devices shall be coordinated with the Georgia Department of Transportation and Fulton County a minimum of 48 hours in advance of the activity.

4. Placement of construction traffic control devices shall be scheduled ahead of associated construction activities. Construction time in street right-of-way shall be conducted to minimize the length of time traffic is disrupted. Construction traffic control devices shall be removed immediately following their useful purpose. Traffic control devices used intermittently, such as “Flagmen Ahead”, shall be removed and replaced when needed.

5. Existing traffic control devices within the construction work zone shall be protected from damage. Traffic control devices requiring temporary relocation shall be located as near as possible to their original vertical and horizontal locations. Original locations shall be measured from reference points and recorded in a log prior to relocation. Temporary locations shall provide the same visibility to affected traffic as the original location. Relocated traffic control devices shall be reinstalled in their original locations as soon as practical following construction.

6. Construction traffic control devices shall be maintained in good repair and shall be clean and visible to affected traffic for daytime and nighttime operation. Traffic control devices affected by the construction work zone shall be inspected daily.

7. Construction warning signs shall be black legend on an orange background. Regulatory signs shall be black legend on a white background. Construction sign panels shall meet the minimum reflective requirements of the Georgia Department of Transportation and Fulton County. Sign panels shall be of durable materials capable of maintaining their color, reflective character and legibility during the period of construction.

8. Channelization devices shall be positioned preceding an obstruction at a taper length as required by the current Manual On Uniform Traffic Control Devices for Streets and Highways, as appropriate for the speed limit at that location. Channelization devices shall be patrolled to insure that they are maintained in the proper position throughout their period of use.

C. Construction Operations

1. Perform all work along highways, streets and roadways to minimize interference with traffic.

2. Stripping: Where the pipe line is laid along road right-of-way, strip and stockpile all sod, topsoil and other material suitable for right-of-way restoration.

3. Trenching, Laying and Backfilling: Do not open the trench any further ahead of pipe laying operations than is necessary. Backfill and remove excess material immediately behind laying operations. Complete excavation and backfill for any portion of the trench in the same day.

4. Shaping: Reshape damaged slopes, side ditches, and ditch lines immediately after completing backfilling operations. Replace topsoil, sod and any other materials removed from shoulders.

5. Construction operations shall be limited to 400 feet along areas, including clean-up and utility exploration.

D. Excavated Materials: Do not place excavated material along highways, streets and roadways in a manner which obstructs traffic. Sweep all scattered excavated material off of the pavement in a timely manner.

E. Drainage Structures: Keep all side ditches, culverts, cross drains, and other drainage structures clear of excavated material. Care shall be taken to provide positive drainage to avoid ponding or concentration of runoff.

F. Landscaping Features: Landscaping features shall include, but are not necessarily limited to: fences; property corners; cultivated trees and shrubbery; manmade improvements; subdivision and other signs within the right-of-way and easement. The Contractor shall take extreme care in moving landscape features and promptly re-establishing these features.

G. Maintaining Highways, Streets, Roadways and Driveways

1. Maintain streets, highways, roadways and driveways in suitable condition for movement of traffic until completion and final acceptance of the Work.

2. During the time period between pavement removal and completing permanent pavement replacement, maintain highways, streets and roadways by the use of steel running plates. Running plate edges shall have asphalt placed around their periphery to minimize vehicular impact. The backfill above the pipe shall be compacted as specified elsewhere up to the existing pavement surface to provide support for the steel running plates.

3. Furnish a road grader or front-end loader for maintaining highways, streets, and roadways. The grader or front-end loader shall be available at all times.

4. Immediately repair all driveways that are cut or damaged. Maintain them in a suitable condition for use until completion and final acceptance of the Work.

3.03 Pipe Distribution

A. Pipe shall be distributed and placed in such a manner that will not interfere with traffic.

B. No pipe shall be strung further along the route than 1,000 feet beyond the area in which the Contractor is actually working without written permission from the County. The County reserves the right to reduce this distance to a maximum distance of 200 feet in residential and commercial areas based on the effects of the distribution to the adjacent property owners.

C. No street or roadway may be closed for unloading of pipe without first obtaining permission from the proper authorities. The Contractor shall furnish and maintain proper warning signs and obstruction lights for the protection of traffic along highways, streets and roadways upon which pipe is distributed.

D. No distributed pipe shall be placed inside drainage ditches.

E. Distributed pipe shall be placed as far as possible from the roadway pavement, but no closer than five feet from the roadway pavement, as measured edge-to-edge.

3.04 Location and Grade

A. The Drawings show the alignment and grade of the water main and the location of valves, hydrants and other appurtenances.

B. Prior to clearing and grubbing, the Engineer will provide a temporary bench mark along the water main route and at all other locations where the alignment of the water main changes significantly.

C. Construction Staking

1. The base lines for locating the principal components of the work are shown on the Drawings. Base lines shall be defined as the line to which the location of the water main is referenced, i.e., edge of pavement, road centerline, property line, right-of-way or survey line. The Contractor shall be responsible for performing all survey work required for constructing the water main, including the establishment of base lines and any detail surveys needed for construction. This work shall include the staking out of permanent and temporary easements to insure that the Contractor is not deviating from the designated easements.

2. The level of detail of survey required shall be that which the correct location of the water main can be established for construction and verified by the Engineer. Where the location of components of the water main, e.g. tunnels and fittings, are not dimensioned, the establishment on the location of these components shall be based upon scaling these locations from the Drawings with relation to readily identifiable land marks, e.g., survey reference points, power poles, manholes, etc.

D. Reference Points

1. The Contractor shall take all precautions necessary, which includes, but is not necessarily limited to, installing reference points, in order to protect and preserve the centerline or baseline established by the Engineer.

2. Reference points shall be placed, at or no more than three feet, from the outside of the construction easement or right-of-way. The location of the reference points shall be recorded in a log with a copy provided to the Engineer for use, prior to verifying reference point locations. Distances between reference points and the manhole centerlines shall be accurately measured to 0.01 foot.

3. The Contractor shall give the Engineer reasonable notice that reference points are set. The reference point locations must be verified by the Engineer prior to commencing clearing and grubbing operations.

E. After the Contractor locates and marks the water main centerline or baseline, the Contractor shall perform clearing and grubbing.

F. Construction shall begin at a connection location and proceed without interruption. Multiple construction sites shall not be permitted without written authorization from the Engineer for each site.

G. The Contractor shall be responsible for any damage done to reference points, base lines, center lines and temporary bench marks, and shall be responsible for the cost of re-establishment of reference points, base lines, center lines and temporary bench marks as a result of the operations.

H. Construction Verification Survey allowance: The Construction Verification Survey cash allowance is solely for the use of the Engineer for verification of the Contractor's reference points, centerlines and work performed. The presence of this cash allowance in no way relieves the Contractor of the responsibility of installing reference points, centerlines, temporary bench marks, providing as-built drawings, or verifying that the work has been performed accurately.

3.05 Laying and Jointing Pipe and Accessories

A. Water mains, valves, hydrants, and appurtenances shall be installed before the installation of the subbase course or paving or any other utilities except sanitary sewer lines.

B. Lay all pipe and fittings to accurately conform to the lines and grades established by the Engineer.

C. Pipe Installation

1. Proper implements, tools and facilities shall be provided for the safe performance of the Work. All pipe, fittings, valves and hydrants shall be lowered carefully into the trench by means of slings, ropes or other suitable tools or equipment in such a manner as to prevent damage to water main materials and protective coatings and linings. Under no circumstances shall water main materials be dropped or dumped into the trench.

2. All pipe, fittings, valves, hydrants and other appurtenances shall be examined carefully for damage and other defects immediately before installation. Defective materials shall be marked and held for inspection by the Engineer, who may prescribe corrective repairs or reject the materials.

3. All lumps, blisters and excess coating shall be removed from the socket and plain ends of each pipe, and the outside of the plain end and the inside of the bell shall be wiped clean and dry and free from dirt, sand, grit or any foreign materials before the pipe is laid. No pipe containing dirt shall be laid.

4. Foreign material shall be prevented from entering the pipe while it is being placed in the trench. No debris, tools, clothing or other materials shall be placed in the pipe at any time.

5. As each length of pipe is placed in the trench, the joint shall be assembled and the pipe brought to correct line and grade. The pipe shall be secured in place with approved backfill material.

6. It is not mandatory to lay pipe with the bells facing the direction in which work is progressing.

7. Applying pressure to the top of the pipe, such as with a backhoe bucket, to lower the pipe to the proper elevation or grade, shall not be permitted.

D. Alignment and Gradient

1. Lay pipe straight in alignment and gradient or follow true curves as nearly as practicable. Do not deflect any joint more than the maximum deflection recommended by the manufacturer.

2. Maintain a transit, level and accessories on the job to lay out angles and ensure that deflection allowances are not exceeded.

E. Expediting of Work: Excavate, lay the pipe, and backfill as closely together as possible. Do not leave unjointed pipe in the trench overnight. Backfill and compact the trench as soon as possible after laying and jointing is completed. Cover the exposed end of the installed pipe each day at the close of work and at all other times when work is not in progress. If necessary to backfill over the end of an uncompleted pipe or accessory, close the end with a suitable plug, either push-on, mechanical joint, restrained joint or as approved by the Engineer.

F. Joint Assembly

1. Push-on, mechanical, flange and restrained type joints shall be assembled in accordance with the manufacturer's recommendations.

2. The Contractor shall inspect each pipe joint within 1,000 feet on either side of main line valves to insure 100 percent seating of the pipe spigot, except as noted otherwise.

3. Each restrained joint shall be inspected by the Contractor to ensure that it has been “homed” 100 percent.

4. The Contractor shall internally inspect each pipe joint to insure proper assembly for pipe 24-inches in diameter and larger after the pipe has been brought to final alignment.

G. Cutting Pipe: Cut ductile iron pipe using an abrasive wheel saw. The Contractor shall cut the pipe and bevel the end, as necessary, to provide the correct length of pipe necessary for installing the fittings, valves, accessories and closure pieces in the correct location. Only push-on or mechanical joint pipe shall be cut.

H. Lining Repair: Repair cement linings and recoat spigot ends of cut pipe with cement lining and bituminous coating as specified in Part 2 of this Section and as specified below:

1. Remove all burrs and areas of loose lining materials by sanding or scraping to bare metal.

2. Remove oil and lubricants used during field cutting.

3. Lining shall be stripped back a minimum of 1-inch from the spigot end into well adhered lined areas.

4. Roughen 1 to 2-inches of good lining with a rough grade (40 grit) emery paper, rasp or small chisel, to allow an overlap between new and existing lining.

5. Apply lining repair material in the number of coats required to match the thickness requirements as specified in Part 2 of this Section and in accordance with the manufacturer's recommendations.

J. Valve and Fitting Installation

1. Prior to installation, valves shall be inspected for direction of opening, number of turns to open, freedom of operation, tightness of pressure-containing bolting and test plugs, cleanliness of valve ports and especially seating surfaces, handling damage and cracks. Defective valves shall be corrected or held for inspection by the Engineer. Valves shall be closed before being installed.

2. Valves, fittings, plugs and caps shall be set and joined to the pipe in the manner specified in this Section for cleaning, laying and joining pipe, except that 12-inch and larger valves shall be provided with special support, such as treated timbers, crushed stone, concrete pads or a sufficiently tamped trench bottom so that the pipe will not be required to support the weight of the valve. Valves shall be installed in the closed position.

3. A valve box shall be provided on each underground valve. They shall be carefully set, centered exactly over the operating nut and truly plumbed. The valve box shall not transmit shock or stress to the valve. The bottom flange of the lower belled portion of the box shall be placed below the valve operating nut. This flange shall be set on brick, so arranged that the weight of the valve box and superimposed loads will bear on the base and not on the valve or pipe. Extension stems shall be installed where depth of bury places the operating nut in excess of 24-inches beneath finished grade so as to set the top of the operating nut 24-inches below finished grade. The valve box cover shall be flush with the surface of the finished area or such other level as directed by the Engineer.

4. In no case shall valves be used to bring misaligned pipe into alignment during installation. Pipe shall be supported in such a manner as to prevent stress on the valve.

5. A valve marker shall be provided for each underground valve. Unless otherwise detailed on the Drawings or directed by the Engineer, valve markers shall be installed 6-inches inside the right-of-way or easement, and buried to a depth of 30-inches. In addition to a concrete valve marker where street curbs are installed, a saw cut ½" deep "V" notch on top of curb adjacent to the water valve location is required.

6. A precast concrete vault shall be installed for 24-inch valves and larger.

K. Hydrant Installation

1. Prior to installation, inspect all hydrants for direction of opening, nozzle threading, operating nut and cap nut dimensions, tightness of pressure-containing bolting, cleanliness of inlet elbow, handling damage and cracks. Defective hydrants shall be corrected or held for inspection by the Engineer.

2. All hydrants shall stand plumb and shall have their nozzles parallel with or at right angles to the roadway, with pumper nozzle facing the roadway, except that hydrants having two-hose nozzles 90 degrees apart shall be set with each nozzle facing the roadway at an angle of 45 degrees.

3. Hydrants shall be set to the established grade, with the centerline of the lowest nozzle at least 12-inches above the ground or as directed by the Engineer.

4. Each hydrant shall be connected to the main with a 6-inch branch controlled by an independent 6-inch valve.

5. When a hydrant is set in soil that is pervious, drainage shall be provided at the base of the hydrant by placing coarse gravel or crushed stone mixed with coarse sand from the bottom of the trench to at least 6-inches above the drain port opening in the hydrant to a distance of 12-inches around the elbow.

6. When a hydrant is set in clay or other impervious soil, a drainage pit 2 x 2 x 2 feet shall be excavated below each hydrant and filled with coarse gravel or crushed stone mixed with coarse sand under and around the elbow of the hydrant and to a level of 6-inches above the drain port.

7. Hydrants shall be located as shown on the Drawings or as directed by the Engineer. In the case of hydrants that are intended to fail at the ground-line joint upon vehicle impact, specific care must be taken to provide adequate soil resistance to avoid transmitting shock moment to the lower barrel and inlet connection. In loose or poor load bearing soil, this may be accomplished by pouring a concrete collar approximately 6-inches thick to a diameter of 24-inches at or near the ground line around the hydrant barrel.

8. All hydrants shall have fluorescent markings at the curb. Markings shall not be the same color as markings denoting water meters.

9. FIRE HYDRANTS SHALL NOT BE OPERATED WITH ANY TOOL EXCEPT A SPECIFICALLY DESIGNED FIRE HYDRANT WRENCH. It is the Contractor's responsibility to ensure that all new facilities are maintained in new condition until final completion of the project and acceptance by the County. Fire hydrants with damaged operating nuts shall not be accepted.

10. New fire hydrants, not yet in service, shall be bagged or tagged with appropriate "out of service" materials. All hydrant openings shall be capped, except when hydrant is being worked on.

L. Air Valve Vaults

1. Construct the vault or manhole as detailed on the Drawings.

2. The frame and cover or floor door shall be cast into the top slab or cone. The floor door drain shall be piped to vault exterior.

3. Vaults and manholes shall be constructed such that their walls are plumb.

M. Electronic markers will be provided for all water mains. Electronic markers shall be installed every 100 linear feet and as needed to establish a change in direction. Contractor shall program markers at the time of installation according to the information template specified by the County. Markers shall be programmed

prior to installation, shall be locked to prevent further programming, and shall be buried 2.5 feet below finished grade, but no more than 4 feet below finished grade. The County shall verify programming and location of all electronic markers, and if placement and/or programmed information is not satisfactory, Contractor shall be responsible for replacing and re-installing the marker.

3.06 Connections to Water Mains

A. Make connections to existing pipe lines with tapping sleeves and valves, unless specifically shown otherwise on the Drawings.

B. Tapping Sleeves

1. Holes in the new pipe shall be machine cut, either in the field or at the factory. No torch cutting of holes shall be permitted.

2. Prior to attaching the sleeve, the pipe shall be thoroughly cleaned, utilizing a brush and rag, as required.

3. Before performing field machine cut, the water tightness of the sleeve assembly shall be pressure tested. The interior of the assembly shall be filled with water. An air compressor shall be attached, which will induce a test pressure of 250 psi. No leakage shall be permitted for a period of five minutes.

4. <u>After attaching the sleeve to an existing main, but prior to making the tap, the interior of the assembly shall be disinfected. All surfaces to be exposed to potable water shall be swabbed or sprayed with a one percent hypochlorite solution.</u>

C. Connections Using Solid Sleeves: Where connections are shown on the Drawings using solid sleeves, the Contractor shall furnish materials and labor necessary to make the connection to the existing pipe line.

D. Connections Using Couplings: Where connections are shown on the Drawings using couplings, the Contractor shall furnish materials and labor necessary to make the connection to the existing pipe line, including all necessary cutting, plugging and backfill.

E. Valve Operation: Existing valves may be operated by County personnel or with the specific authorization and/or direct supervision of the County. The only exception is an emergency situation affecting public health or safety. Any Contractor found violating this provision may be subject to prosecution under the Code of Fulton County for tampering with County property. When the Contractor requires existing valves to be operated in order to perform the work, the Contractor shall request such services from the Department of Public Works at least eight working days in advance.

F. System Shutdowns and Interruption of Services

1. Shutdowns shall be coordinated directly through the County. The Contractor shall notify the Engineer in writing at least eight working days in advance when scheduling the work. When more than eight working days notice is deemed necessary by the County, the length of such notice shall be as shown on the Drawings. Scheduling of shutdowns shall be approved at the discretion of the County. The County reserves

the right to cancel the shutdown if conditions warrant (i.e. heavy rain, main break, etc.).

2. Contractor will provide “Water Line Maintenance” signs as directed by the County. Signs will be as specified in Figure 1 at the end of this Section.

3. The County does not at any time guarantee the Contractor a 100 percent complete shutdown or dry shut. Dewatering shall be the responsibility of the Contractor.

4. Shutdowns will be permitted Monday through Thursday, exclusive of County holidays. The Contractor shall perform connections to existing mains requiring shutdowns at night. Unless otherwise specified by the County, the hours of the shutdown shall be limited from 12:00 midnight to 6:00 A.M. In business districts and other areas of high water usage, circumstances may dictate limiting the hours of shutdown from 2:00 A.M. to 6:00 A.M. The excavation for the work shall be completed no later than 3:30 P.M. on the day prior to the shutdown to allow for inspection by the County.

5. The materials to be installed and the tools to be used shall be assembled and ready for inspection no later than 3:30 P.M. on the day prior to the shutdown. The inside of all water system pipe and fittings to be installed shall be cleaned and swabbed with a chlorine solution of 50 mg/L, and ends of lines shall be capped until the time of installation. All visible dirt and foreign materials shall be removed from the interior of the pipe and fittings. Immediately prior to installation of the assembly, the pipe and fittings shall again be swabbed with 50 mg/L chlorine solution. The Contractor shall review in detail his plan of operation with the Engineer at the time the excavated pipe work is inspected for readiness.

6. Excavation around the existing pipe shall be sufficient to allow the work to be performed without requiring additional excavation during the connection. Excavation shall be of sufficient depth to accommodate a minimum of 8-inches uniform depth of #57 stone which shall be placed by the Contractor over the entire bottom of the excavation. In addition, there shall be a minimum of 12-inches clearance between the bottom of the pipe and the top of the #57 stone.

7. The Contractor shall clean and mark the locations on the existing pipe where the pipe cuts are to be made by 3:30 P.M. on the day prior to the shutdown. The Contractor shall measure the outside diameter of the pipe to be cut-in to be sure the proposed pipe and fittings are compatible with the existing pipe to be cut. All measurements shall be double-checked in the presence of the Engineer just prior to cutting the existing pipe.

8. The Contractor shall have sufficient crews and equipment on hand to perform the work for each connection. All equipment to be used during the work, including, but not limited to, pump, backup pump, backhoe, at least two pipe saws, fuel, tools, generators, light towers, tanker truck, etc., shall be test run and determined to be in proper running order prior to cutting of the existing pipe. If the Contractor fails to provide adequate equipment in proper running order, the Engineer has the option to cancel

the work, and the Contractor shall request rescheduling when the deficiencies have been corrected.

9. The Contractor shall have available at the site of the work two full circle stainless steel repair clamps and two ductile iron mechanical joint plugs or caps as necessary for each size of pipe to be cut. If plugs or caps are used, appropriate thrust restraint shall be provided by the Contractor.

10. After an existing main has been taken out of service for the work, the Contractor shall make continuous progress toward restoring the water main to full service. The Contractor shall maintain sufficient crews, equipment, and supplies and shall not leave the work site until the water main work has been completed and restored to complete operation.

11. Any pump discharge shall be directed in such a manner as to ensure drainage away from the excavation to prevent flooding of streets or private property.

12. Hydrant service signs shall be placed by the Contractor on existing hydrants temporarily taken out of service as directed by the Engineer. Such signs shall remain in place until removal is approved by the Engineer.

G. The Contractor shall be responsible for any additional expense incurred by the Owner from his failure to comply with the aforementioned requirements. The Contractor shall anticipate the additional expense in performing the work at night and under partial shutdown conditions. No claims for additional compensation shall be made by the Contractor for performing these operations outside normal working hours and complete shutdown conditions.

3.07 Thrust Restraint

A. Provide restraint at all points where hydraulic thrust may develop.

B. Retainer Glands: Provide retainer glands where shown on the Drawings. Retainer glands shall be installed in accordance with the manufacturer's recommendations, particularly, the required torque of the set screws. The Contractor shall furnish a torque wrench to verify the torque on all set screws which do not have inherent torque indicators.

C. Hydrants: Hydrants shall be attached to the water main by the following method:

1. The isolation valve shall be attached to the main by connecting the valve to the hydrant tee.

2. The isolation valve shall be attached to the hydrant by providing an anchor coupling between the valve and hydrant, if the hydrant and valve are less than two feet apart. Otherwise, provide ductile iron pipe with retainer glands on the hydrant and valve.

D. Thrust Collars: Collars shall be constructed as shown on the Drawings. Concrete and reinforcing steel shall meet the requirements as specified in this Section. The split gland mega lug or welded on collar shall be designed to meet the minimum allowable load shown on the Drawings. The welded-on collar shall be attached to the pipe by the pipe manufacturer.

E. Concrete Blocking

1. Provide concrete blocking for all bends, tees, valves, and other points where thrust may develop, except where other exclusive means of thrust restraint are specifically shown on the Drawings.

2. Concrete shall be as specified in this Section.

3. Form and pour concrete blocking at fittings as shown on the Drawings and as directed by the Engineer. Pour blocking against undisturbed earth. Increase dimensions when required by over excavation. The Contractor shall allow the concrete to set up for a minimum of 4-hours before backfilling.

F. Harnessing

1. Provide harness rods only where specifically shown on the Drawings or directed by the Engineer.

2. Harness rods shall be manufactured in accordance with ASTM A 36 and shall have an allowable tensile stress of no less than 22,000 psi. Harness rods shall be hot dip galvanized or field coated with bitumastic before backfilling.

3. Where possible, harness rods shall be installed through the mechanical joint bolt holes. Where it is not possible, provide 90 degree bend eye bolts or duc-lugs.

4. Eye bolts shall be of the same diameter as specified in AWWA C111 for that pipe size. The eye shall be welded closed. Where eye bolts are used in conjunction with harness rods, an appropriate size washer shall be utilized with a nut on each end of the harness rod. Eye bolts shall be of the same material and coating as the harness rods.

3.08 Inspection and Testing

A. All sections of the water main subject to internal pressure shall be pressure tested in accordance with AWWA C600. A section of main will be considered ready for testing after completion of all thrust restraint and backfilling.

B. Each segment of water main between main valves shall be tested individually.

C. Test Preparation

1. The Contractor shall supply the pumps, water, temporary support or reinforcement as necessary for testing purposes, gauges and meters calibrated within 90 days of the test, and all the necessary apparatus and labor. The Contractor shall notify the Engineer at least 24 hours in advance of the test date and perform tests in the presence of the Engineer.

2. For water mains less than 24-inches in diameter, flush sections thoroughly at flow velocities, greater than 2.5 feet per second, adequate

to remove debris from pipe and valve seats. For water mains 24-inches in diameter and larger, the main shall be carefully swept clean, and mopped if directed by the Engineer. Partially operate valves and hydrants to allow the water to flush the seats.

3. Provide temporary blocking, bulkheads, flanges and plugs as necessary, to assure all new pipe, valves, and appurtenances will be pressure tested. Pressure test shall not commence until after thrust restraint has been installed, the line has been backfilled, and at least seven days has passed since the last concrete thrust blocking was poured.

4. Fill pipeline slowly with water at a velocity of approximately one foot per second. Before applying test pressure, air shall be completely expelled from the pipeline and all appurtenances. Insert corporation cocks at highpoints to expel air as main is filled with water as necessary to supplement automatic air valves. Corporation stops shall be constructed as detailed on the Drawings with a meter box.

5. Provide a suitable pump with an accurate gauge to pump the line to the specified pressure.

6. The differential pressure across a valve or hydrant shall equal the maximum possible, but not exceed, the rated working pressure. Where necessary, provide temporary backpressure to meet the differential pressure restrictions.

7. Valves shall not be operated in either the opening or closing direction at differential pressures above the rated pressure.

8. Pressure shall be applied at intervals not to exceed 2000 feet.

D. Test Pressure: Test the pipeline at 250 psi measured at the lowest point for at least two hours. Maintain the test pressure within 5 psi of the specified test pressure for the test duration. Should the pressure drop more than 5 psi at any time during the test period, the pressure shall be restored to the specified test pressure. Provide an accurate pressure gauge with graduation not greater than 5 psi. Any exposed pipe, fittings, valves, and joints shall be examined carefully during the test. Any damaged or defective pipe, fittings, or valves following the hydrostatic pressure test or leakage test shall be repaired in a manner approved by the Engineer or replaced with sound material, and the test shall be repeated until it is satisfactory to the Engineer. Allow the system to stabilize at the test pressure before conducting the leakage test.

E. Leakage

1. A leakage test shall be conducted concurrently with the hydrostatic pressure test. The leakage test shall be performed with a calibrated water meter, calibrated pressure gauge, measure container, pump and water. The Contractor shall provide certification of calibration of testing devices indicating devices were calibrated within 90 days of actual tests. All equipment shall be approved by the Engineer prior to performance.

2. Leakage shall be defined as the sum of the quantity of water that must be pumped into the test section to maintain pressure within 5 psi of the specified test pressure for the test duration plus water required to return line to test pressure at the end of the test. Leakage shall be the total cumulative amount measured on a water meter.

3. The County assumes no responsibility for leakage occurring through existing valves.

F. Test Results: No test section shall be accepted if the leakage exceeds the limits determined by the following formula:

$$L = \frac{SD\,(P)^{1/2}}{133{,}200}$$

Where: L = allowable leakage, in gallons per hour
S = length of pipe tested, in feet
D = nominal diameter of the pipe, in inches
P = average test pressure during the leakage test, in pounds per square inch (gauge)
As determined under Section 4 of AWWA C600.

If the water main section being tested contains lengths of various pipe diameters, the allowable leakage shall be the sum of the computed leakage for each diameter. If any test of pipe laid discloses defects due to hydrostatic pressure test or leakage greater than that specified, the Contractor shall, at his own expense, locate and make repairs in a manner approved by the Engineer and perform tests again until results are within allowable limits. All visible leaks shall be repaired regardless of leakage test results.

G. Completion: After a pipeline section has been accepted, relieve test pressure. Record type, size and location of all outlets on record drawings.

3.09 Disinfecting Pipeline

A. After successfully pressure testing each pipeline section, disinfect in accordance with AWWA C651 for the continuous-feed method and these Specifications.

B. Specialty Contractor: Disinfection shall be performed by an approved specialty contractor. Before disinfection is performed, the Contractor shall submit a written procedure for approval before being permitted to proceed with the disinfection. This plan shall also include the steps to be taken for the neutralization of the chlorinated water.

C. Chlorination

1. Apply chlorine solution to achieve a concentration of at least 25 milligrams per liter free chlorine in new line. Retain chlorinated water for 24 hours. Water shall be supplied from a temporary source protected by appropriate backflow prevention devices. Backflow preventer must be approved by the County prior to connection. Chlorine shall be injected no more than ten feet from the beginning of the new main.

2. Chlorine concentration shall be recorded at every outlet along the line at the beginning and end of the 24 hour period.

3. After 24 hours, all samples of water shall contain at least 10 milligrams per liter free chlorine. Re-chlorinate if required results are not obtained on all samples.

D. Disposal of Chlorinated Water: Reduce chlorine residual of disinfection water to less than one milligram per liter if discharged directly to a body of water or to less

than two milligrams per liter if discharged onto the ground prior to disposal. Treat water with sulfur dioxide or other reducing chemicals to neutralize chlorine residual. Flush all lines until residual is equal to existing system.

E. Bacteriological Testing: After final flushing and before the water main is placed in service, the Contractor shall collect samples from the line and have tested for bacteriological quality in accordance with the rules of the Georgia Department of Natural Resources, Environmental Protection Division. One set of samples shall be collected from every 1,200 feet of water main, plus one set from each end of main and one set from each branch. Testing shall be performed by the County's water laboratory. Re-chlorinate lines until required results are obtained.

3.10 Protection and Restoration of Work Area

A. General: Return all items and all areas disturbed, directly or indirectly by work under these Specifications, to their original condition or better, as quickly as possible after work is started.

1. The Contractor shall plan, coordinate, and prosecute the work such that disruption to personal property and business is held to a practical minimum.

2. All construction areas abutting lawns and yards of residential or commercial property shall be restored promptly. Backfilling of underground facilities, ditches, and disturbed areas shall be accomplished on a daily basis as work is completed. Finishing, dressing, and grassing shall be accomplished immediately thereafter, as a continuous operation within each area being constructed and with emphasis placed on completing each individual yard or business frontage. Care shall be taken to provide positive drainage to avoid ponding or concentration of runoff.

3. Handwork, including raking and smoothing, shall be required to ensure that the removal of roots, sticks, rocks, and other debris is removed in order to provide a neat and pleasing appearance.

4. The Department of Transportation's engineer shall be authorized to stop all work by the Contractor when restoration and cleanup are unsatisfactory and to require appropriate remedial measures.

B. Man-Made Improvements: Protect, or remove and replace with the Engineer's approval, all fences, walkways, mail boxes, pipe lines, drain culverts, power and telephone lines and cables, property pins and other improvements that may be encountered in the Work.

C. Cultivated Growth: Do not disturb cultivated trees or shrubbery unless approved by the Engineer. Any such trees or shrubbery which must be removed shall be heeled in and replanted under the direction of an experienced nurseryman.

D. Cutting of Trees: Do not cut trees for the performance of the work except as absolutely necessary. Protect trees that remain in the vicinity of the work from damage from equipment. Do not store spoil from excavation against the trunks. Remove excavated material stored over the root system of trees within 30 days to allow proper natural watering of the root system. Repair any damaged tree over 3-inches in diameter, not to be removed, under the direction of an experienced nurseryman. All trees and brush that require removal shall be

promptly and completely removed from the work area and disposed of by the Contractor. No stumps, wood piles, or trash piles will be permitted on the work site.

E. Disposal of Rubbish: Dispose of all materials cleared and grubbed during the construction of the Project in accordance with the applicable codes and rules of the appropriate county, state and federal regulatory agencies.

F. Swamps and Other Wetlands

1. The Contractor shall not construct permanent roadbeds, berms, drainage structures or any other structures which alter the original topographic features within the easement.

2. All temporary construction or alterations to the original topography will incorporate measures to prevent erosion into the surrounding swamp or wetland. All areas within the easement shall be returned to their original topographic condition as soon as possible after work is completed in the area. All materials of construction and other non-native materials shall be disposed by the Contractor.

3. The Contractor shall provide temporary culverts or other drainage structures, as necessary, to permit the free migration of water between portions of a swamp, wetland or stream which may be temporarily divided by construction.

4. The Contractor shall not spread, discharge or dump any fuel oil, gasoline, pesticide, or any other pollutant to adjacent swamps or wetlands.

3.11 Abandoning Existing Water Mains

A. General: Abandon in place all existing water main segments indicated on the Drawings to be abandoned. Perform abandonment after the new water main has been placed in service and all water main services have been changed over to the new main. Salvage for the County, existing fire hydrants, valve boxes, valve markers, and other materials indicated on the Drawings or located on water mains abandoned.

B. Capping and Plugging

1. Where existing water mains are proposed for abandonment and where portions of the water distribution system must be shut down, the Contractor will only be permitted to perform cut and plug operations on Monday through Thursday between the hours of 12:00 midnight and 6:00 A.M. Furthermore, the County does not guarantee a complete shutdown of the distribution system should a shutdown be necessary. The Contractor shall anticipate cut and plug operations having to be carried out with the system under partial pressure and provide additional equipment as necessary for such an operation at no additional cost to the County.

2. Disconnect by sawing or cutting and removing a segment of existing pipe where cutting and capping or plugging is shown on the Drawings or directed by the Engineer. Provide a watertight pipe cap or plug and concrete blocking for restraint to seal off existing mains indicated to remain

in service. Seal ends of existing mains to be abandoned with a pipe cap or plug or with a masonry plug and minimum 6-inch cover of concrete on all sides around the end of the pipe. The Contractor shall be responsible for uncovering and verifying the size and material of the existing main to be capped or plugged.

C. Salvaging Materials: Salvage existing fire hydrants, valve boxes, valve markers and other materials as indicated on the Drawings and deliver salvaged items in good condition to the County's storage yard. Coordinate delivery and placement of salvaged materials in advance with the County.

D. Blow-Off Piping: Remove existing blow-off piping, located on segments of water mains to be abandoned, to a minimum of two feet below finished grade. Seal the end of remaining piping as specified above in paragraph B. Blow-off piping removed becomes the property of the Contractor.

E. Pavement Removal and Replacement: Perform any necessary pavement removal and replacement in accordance with the details on the Drawings and Section 02575 of these Specifications.

FIGURE 1

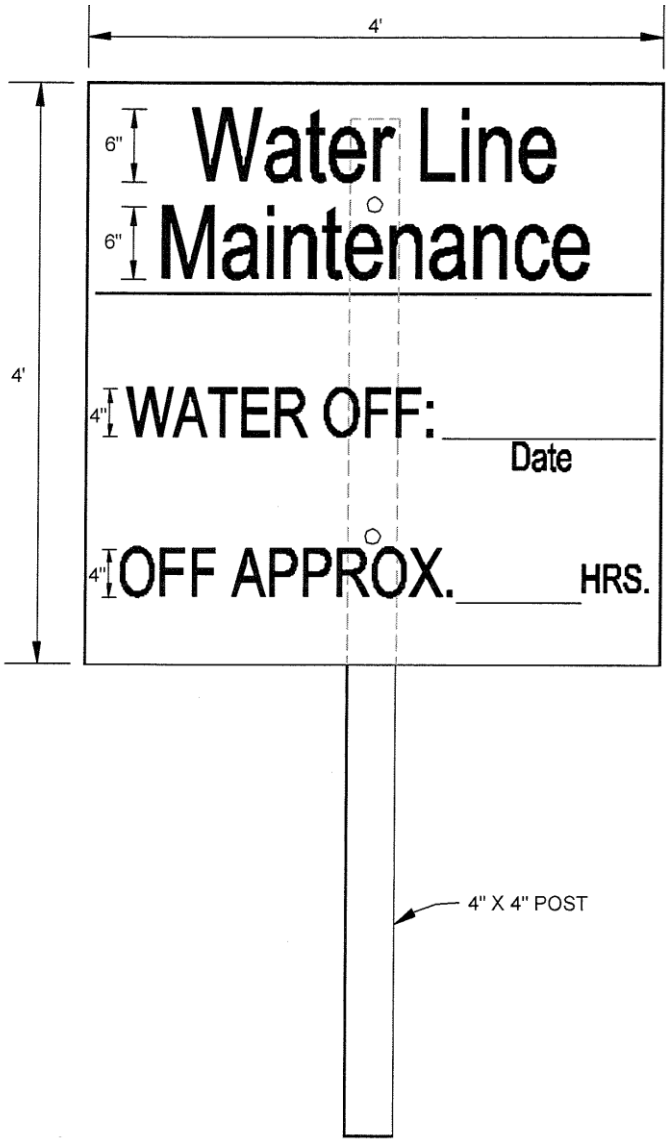

WATER LINE
MAINTENANCE
SIGN

END OF SECTION

Part 1 General

1.01 Scope

A. The work covered by this Section includes furnishing all materials and equipment, providing all required labor and installing water service connections and all appurtenant work according to these Specifications and/or to the Water Connection Detail as shown schematically on the Drawings.

B. Water meters are not to be furnished nor installed. However, the water meter connection must be compatible with the water meters currently used by the Owner.

1.02 Locations

Locations shall be directed by the Engineer along the route of the water mains.

1.03 Service Compatibility

It is the intent of these Specifications that the water service connections shall duplicate those presently being provided by the County in order to be compatible with their service maintenance procedures.

1.04 Quality Control

All materials installed under this Section shall have the approval of the NSF for water services.

Part 2 Products

2.01 Materials and Construction

A. Service Line

1. No galvanized or PVC pipe or fittings shall be used on water services.

2. Copper Tubing: Tubing shall be ASTM B 88, Type K. Fittings shall be brass with flare connection inlets and outlets, ANSI B16.26. Where required, adapters shall be brass ANSI B16.18. Unions shall be cast bronze. Joints shall be flare type. All fittings shall be of bronze construction with flare type connection.

B. Meter Box for Single Family Residential (where sewer service is not present)

1. Meter boxes shall be the “Rome” type and shall be of cast iron, oval shape.

2. Minimum inside dimensions shall be 19 inches x 10 inches and at least 11-1/2 inches deep.

3. Lids shall be Fulton County standard and fit snugly on the box. Lids shall be banded together with a steel strapping and painted with black asphaltic paint before shipping. The combined weight of the box and lid shall not be less than 60 pounds.

C. Meter Box for Irrigation Meter

1. Where irrigation meters are necessary (where sewer service is present), meter boxes shall be cast iron painted black with a locking lid quad valve box. Boxes shall have nominal dimensions of 14-3/4 inches x 17 inches at bottom, 12 inches x 14 inches opening, and 12 inches tall. Meter box assemblies shall include one U-branch, four ball valves, two unions, two touch plugs with cotter pins, and two expansion connections. The entire assembly shall be configured to allow 7-1/2 inch meter and an ASSE 1024 dual check valve with a combined distance of 12-3/4 inches between inlet and outlet unions for the installation of the meter and ASSE 1024 dual check valve backflow preventer. The County will install the meter after property owner applies for it.

2. Meter boxes shall be equal to Ford Meter Box Company, Double Gulf Box Part #LDG12U-243FULTTPNA.

D. Valves and Accessories

1. Curb Stops

a. Ball valves shall be full port bronze, heavy duty type. Valve ends shall be threaded. Valves shall have a minimum 200 psi working pressure for water. Valves shall have stainless steel nut and handle. Valves shall be made in the U.S.A.

b. Curb stops shall be equal to Ford B43-332W with padlock wings. The stops shall open left.

2. Corporation Cocks

a. Corporation cocks shall be ground key type, shall be made of bronze conforming to ASTM B61 or B62 and shall be suitable for the working pressure of the system. Ends shall be suitable for flare type joint. Coupling nut for connection to flared copper tubing shall conform to ANSI B16.26.

b. Corporation cocks shall be equal to Ford FB600-4. The cocks shall open left.

E. 1-1/2-inch water services are saddle tapped to the water main using the following brass material certified to ANSI/NSF Standard 61:

1. Brass Saddles/W (IPT) – Ford or equal:

Pipe Size	Part No.
6”	202B-750-IP6
8”	202B-962-IP6
10”	202B-1212-IP6
12”	202B-1438-IP6
16”	202B-1840-IP6
20”	202B-2220-IP6
24"	202B-2650-IP6

2. 1 ½" Ballcorp Corporation Stop: Ford #FB1100-6-G-K or equal
3. 1 ½" Rolled Type K soft copper tubing
4. 1 ½" Meter Setter- A.Y. McDonald #20R600WWFF 666X402 or equal
5. Water meter box & lid are of a composite material, box 24x36x24, and lid with one 1 ¼" hole on top.

F. 2-inch water services are saddle tapped to the water main using the following brass material certified to ANSI/NSF Standard 61:

1. Brass Saddles/W (IPT) – Ford or equal:

Pipe Size	Part No.
6"	202B-750-IP7
8"	202B-962-IP7
10"	202B-1212-IP7
12"	202B-1438-IP7
16"	202B-1840-IP7
20"	202B-2220-IP7
24"	202B-2650-IP7

2. 2" Ballcorp Corporation Stop: Ford #FB1100-7-G-K or equal
3. 2" Rolled Type K soft copper tubing
4. 2" Meter Setter: A.Y. McDonald #20R700WWFF 777X15.62 or equal
5. Water meter box & lid are of a composite material, box 24x36x24, and lid with two 1 ¼" holes on top.

G. Detection Tape: Detection tape shall be composed of a solid aluminum foil encased in a protective plastic jacket. Tapes shall be color coded in accordance with APWA color codes with the following legends: Water Systems, Safety Precaution Blue, "Caution Water Line Buried Below". Colors may be solid or striped. Tape shall be permanently printed with no surface printing allowed. Tape width shall be a minimum of 2-inches when buried less than 10-inches below the surface. Tape width shall be a minimum of 3-inches when buried greater than 10-inches and less than 20-inches. Detection tape shall be equal to Lineguard Type III Detectable or Allen Systems Detectatape.

2.02 Double Detector Backflow Preventer Assembly

A. Provide a double detector check (DDC) backflow preventer (BFP) assembly in a size to match that of the required fire line service piping. The DDC-BFP assembly shall be provided with a OS&Y gate valve near the inlet and outlet sides of the device.

B. The DDC device shall be provided with three brass ball valve test cocks fitted with brass or plastic threaded plugs. A fourth test cock shall be provided on the upstream side of the inlet shut-off valve.

C. The DDC device and shut-off valve bodies shall be cast iron, coated inside and outside with a NSF-approved, fused epoxy coating and assembled with bolts that are resistant to electrolysis. All DDC device interior/exterior components shall be of materials equal in corrosion resistance to bronze and/or stainless steel to resist electrolysis.

D. Check valves shall have replaceable seats, and be accessible by top-entry only for maintenance and repair. The detector bypass line on the DDC-BFP assembly shall

be of 3/4-inch copper pipe and have a bronze detector meter and a 3/4-inch DCV-BFP complete with unions and shut-off valves.

E. The DDC-BFP assembly shall be classified or listed by the Underwriters Laboratories, Factory Mutual Insurance, and bear the ASSE seal (ASSE Standard 1049). The DDC-BFP assembly shall have approval of and conform to all current requirements of the University of Southern California, Foundation for Cross-Connection Control (USC-FCCC). The DDC-BFP assembly shall be individually factory tested, shipped and installed as a unit.

F. The DDC-BFP assembly shall not be buried in earth but installed below ground in a concrete vault, and as close as practical to the property line of the premises.

G. Under no condition will any connection be allowed on the system other than for fire fighting or fire protection purposes.

H. All DDC-BFP assemblies shall be tested at the time of installation and at least annually thereafter. A copy of all test and maintenance reports must be submitted to the Fulton County Water Department, Dogwood Station.

Part 3 Execution

3.01 Installation

A. Water Service Connections

1. Immediately following completion of the water main system, water service connections and meter boxes shall be installed for the properties adjacent to the water transmission mains both to the same side of the roadway (Short Side Service) and to the opposite side of the roadway (Long Side Service) as directed by the Engineer.

2. The Contractor shall be prepared to make emergency repairs to the water system, if necessary, due to damage by others working in the area. In conjunction with this requirement, the Contractor shall furnish and have available at all times, a tapping machine, for the purpose of making temporary water service taps or emergency repairs to damaged water services. The Contractor shall furnish the County a phone number of an individual with the authority to initiate emergency repair work. This number must be provided prior to starting work on the Project.

3. All services connected to water main shall be through individual 1-inch direct taps regardless of service and meter size with the exception of 1 ½" and 2" inch services and above.

4. The water main shall be tapped with a tapping machine specifically designed for that purpose. The tap shall be a direct tap into the water main through a 1-inch brass corporation cock. All taps shall be supervised by the County. All taps shall be made on the water main at a position so as not to be the top side of the pipe nor the bottom of the pipe. Distance between taps must be a minimum of 12 inches apart and not in line with each other.

5. Installation shall conform to the details for water service connections appearing schematically on the Drawings. Contractor shall provide any and

all appurtenant work required to provide the intended water service connections.

B. Service Lines

1. Copper tubing between tap and water meter shall be one continuous length of pipe with no intermediate joints or connections. The service line shall be placed without sharp turns or bends from the water main to the meter box.
2. When meters are located on the opposite side of the street from the water main, new copper service lines shall be extended through a common 6-inch bore, Schedule 40 PVC conduit to the service side. Replacement of existing services may be by free bore without a casing.

3. Provide detection tape over all service lines.

4. Service lines shall have a minimum 30-inch clear cover between main and meter, shallowing to a bury of 12-inches at the meter location.

C. Meter Boxes

1. The meter box shall be located one foot from back of right of way. The meter box lid shall be set at finished grade. The meter box shall be placed on two courses of brick on a bed of gravel or crushed stone. Brick shall not be placed on top of water service lines. The bed of gravel or crushed stone shall be 3-inches thick and extend 6-inches in all directions beyond the edge of the meter box. The box shall be carefully and uniformly backfilled to prevent distortion that would cause leaks. Meter boxes shall be located in pairs within two feet of the common property lines between the lots.

2. All water meters shall have fluorescent markings at curb. Markings shall not be the same color as markings denoting hydrants. In addition to fluorescent markings, a saw cut ½" deep "W" notch on top of curb at water service location is required.

D. Relocation of Service Lines

1. Relocate the existing meter to the new right-of-way limits as shown on the drawings or as ordered by the Engineer and reconnect to the house service. Existing meters already located at the new right-of-way limits will not need relocating.

2. Before disconnecting the existing meter, the existing corporation in the main shall be closed. All existing meters and meter boxes shall be removed if not already located at the right-of-way, reinstalled and reconnected as indicated on the Drawings.

3. Existing service lines shall be field-located by the Contractor. The Contractor shall be responsible for locating existing water meters, relocating the meters and meter boxes as necessary, and determining the existing size service line to reconnect the meters to the new water mains. All service lines installed under existing pavement, including streets, driveways and sidewalks, shall be installed by boring.

E. Transfer of Service: Immediately before connecting to the relocated or existing meter, all service lines shall be flushed to remove any foreign matter. Any special

fittings required to reconnect the existing meter to the new copper service line, or the existing private service line, shall be provided by the Contractor. To minimize out of service time, the Contractor shall determine the connections to be made and have all the required pipe and fittings on hand before shutting off the existing service. After completing the connection, the new corporation stop shall be opened and all visible leaks shall be repaired.

F. Maintenance and Repairs: The tap, service line and meter box shall remain under the Contractor's maintenance responsibility for the same warranty period as the water main. The Contractor shall promptly repair any damage to the water system during the warranty period.

END OF SECTION

Part 1 General

1.01 Scope

A. The work covered by this Section consists of furnishing all labor, equipment and material required to place topsoil, seed, commercial fertilizer, agricultural limestone and mulch material, including seedbed preparation, harrowing, compacting and other placement operations on graded earthen areas as described herein and/or shown on the Drawings. In general, seeding operations shall be conducted on all newly graded earthen areas not covered by structures, pavement or sidewalks; all cleared or grubbed areas which are to remain as finish grade surfaces; and on all existing turf areas which are disturbed by construction operations and which are to remain as finish grade surfaces. Areas disturbed by borrow activities shall also be seeded according to these Specifications.

B. The work shall include temporary seeding operations to stabilize earthen surfaces during construction or inclement weather and to minimize stream siltation and erosion. Temporary seeding shall be performed at the times and locations as directed by the Engineer.

1.02 Quality Assurance

A. Prior to seeding operations, the Contractor shall furnish to the Engineer labels or certified laboratory reports from an accredited commercial seed laboratory or a state seed laboratory showing the analysis and germination of the seed to be furnished. Acceptance of the seed test reports shall not relieve the Contractor of any responsibility or liability for furnishing seed meeting the requirements of this Section.

B. Prior to topsoil operations, the Contractor shall obtain representative samples and furnish soil test certificates including textural, pH, and organic analysis from the State University Agricultural Extension Services or other certified testing laboratory.

Part 2 Products

2.01 Acceptable Manufacturers

All materials shall conform to the requirements and standards of this Section.

Wood-cellulose fiber mulch shall be manufactured by Weyerhauser Company or Conway Corporation.

2.02 Topsoil

A. Utilizing designated stockpiles or borrow areas on site, the Contractor shall place a minimum of 4-inches of topsoil over all graded earthen areas and over any other areas to be seeded. Sources of topsoil shall be approved by the Engineer prior to disturbance. Importing topsoil from offsite sources shall be at the discretion of the Engineer and shall be justification for additional compensation to the Contractor. A change order properly authorized by the Owner shall be agreed upon prior to importing offsite topsoil. No additional compensation will be allowed for spreading of topsoil.

B. Topsoil shall be a friable loam containing a large amount of humus and shall be original surface soil of good, rich, uniform quality, free from any material such as hard clods, stiff clay, hardpan, partially disintegrated stone, pebbles larger than 1/2-inch in diameter, lime, cement, bricks, ashes, cinders, slag, concrete, bitumen or its residue, boards, sticks, chips or other undesirable material harmful or unnecessary to plant growth. Topsoil shall be reasonably free from perennial weeds and shall not contain objectionable plant material, toxic amounts of either acid or alkaline elements or vegetable debris undesirable or harmful to plant life.

C. Topsoil shall be natural topsoil without admixture of subsoil material, and shall be classifiable as loam, silt loam, clay loam, sandy loam or a combination thereof. The pH shall range from 5.5 to 7.0. Topsoil shall contain not less than five percent nor more than 20 percent, by weight, of organic matter as determined by loss on ignition of oven-dried samples to 65 degrees C.

2.03 Seed

A. Seed shall be delivered in new bags or bags that are sound and labeled in accordance with the U.S. Department of Agriculture Federal Seed Act.

B. All seed shall be from the last crop available at time of purchase and shall not be moldy, wet or otherwise damaged in transit or storage.

C. Seed shall bear the growers analysis testing to 98 percent for purity and 90 percent for germination. At the discretion of the Engineer, samples of seed may be taken for verification against the grower's analysis.

D. Species, rate of seeding, fertilization and other requirements are shown on Table 1.

2.04 Fertilizer and Liming Materials

A. Fertilizer and liming materials shall comply with applicable state, local and federal laws concerned with their production and use.

B. Commercial fertilizer shall be a ready mixed material equivalent to the grade or grades specified in Table 1. Container bags shall have the name and address of the manufacturer, the brand name, net weight and chemical composition.

C. Agricultural limestone shall be a pulverized dolamitic limestone having a calcium carbonate content of not less than 85 percent by weight. Agricultural limestone shall be crushed so that at least 85 percent of the material will pass a No. 10 mesh screen and 50 percent will pass a No. 40 mesh screen.

2.05 Mulch Material

A. All mulch materials shall be air dried and reasonably free of noxious weeds and weed seeds or other materials detrimental to plant growth.

B. Mulch shall be composed of wood cellulose fiber, straw or stalks, as specified herein. Mulch shall be suitable for spreading with standard mulch blowing equipment.

C. Straw mulch shall be partially decomposed stalks of wheat, rye, oats or other approved grain crops.

D. Stalks shall be the partially decomposed, shredded residue of corn, cane, sorghum or other approved standing field crops.

2.06 Mulch Binder

A. Mulch on slopes exceeding 3 to 1 ratio shall be held in place by the use of an approved mulch binder. The mulch binder shall be non-toxic to plant life and shall be acceptable to the Engineer.

B. Emulsified asphalt binder shall be Grade SS-1, ASTM D 977. Cutback asphalt binder shall be Grade RC 70 or RC 250.

2.07 Legumes

All leguminous seed shall be inoculated prior to seeding with a standard culture of nitrogen-fixing bacteria that is adapted to the particular seed involved.

2.08 Water

Water shall be clean, clear water free from any objectionable or harmful chemical qualities or organisms and shall be furnished by the Contractor.

Part 3 Execution

3.01 Securing and Placing Topsoil

A. Topsoil shall be secured from areas from which topsoil has not been previously removed, either by erosion or mechanical methods. Topsoil shall not be removed to a depth in excess of the depth approved by the Engineer.

B. The area or areas from which topsoil is secured shall possess such uniformity of soil depth, color, texture, drainage and other characteristics as to offer assurance that, when removed the product will be homogeneous in nature and will conform to the requirements of these Specifications.

C. All areas from which topsoil is to be secured, shall be cleaned of all sticks, boards, stones, cement, ashes, cinders, slag, concrete, bitumen or its residue and any other refuse which will hinder or prevent growth.

D. In securing topsoil from a designated pit, or elsewhere, should strata or seams of material occur which do not come under the requirements for topsoil, such material shall be removed from the topsoil or if required by the Engineer, the pit shall be abandoned.

E. Before placing or depositing topsoil upon any areas, all improvement within the area shall be completed, unless otherwise approved by the Engineer.

F. The areas in which topsoil is to be placed or incorporated shall be prepared before securing topsoil for use.

3.02 Seedbed Preparation

A. Before fertilizing and seeding, the topsoil surfaces shall be trimmed and worked to true line from unsightly variation, bumps, ridges and depressions and all detrimental material, roots and stones larger than 3-inches in any dimension shall be removed from the soil.

B. Not earlier than 24 hours before the seed is to be sown, the soil surface to be seeded shall be thoroughly cultivated to a depth of not less than 4-inches with a weighted disc, tiller, pulvimixer or other equipment, until the surface is smooth and in a condition acceptable to the Engineer.

C. If the prepared surface becomes eroded as a result of rain or for any other reason, or becomes crusted before the seed is sown, the surface shall again be placed in a condition suitable for seeding.

D. Ground preparation operations shall be performed only when the ground is in a tillable and workable condition, as determined by the Engineer.

3.03 Fertilization and Liming

A. Following seedbed preparation, fertilizer shall be applied to all areas to be seeded so as to achieve the application rates shown on Table 1.

B. Fertilizer shall be spread evenly over the seedbed and shall be lightly harrowed, raked, or otherwise incorporated into the soil for a depth of 1-inch.

C. Fertilizer need not be incorporated in the soil as specified above when mixed with seed in water and applied with power sprayer equipment. The seed shall not remain in water containing fertilizer for more than 30 minutes when a hydraulic seeder is used.

D. Agricultural limestone shall be thoroughly mixed into the soil according to the rates shown on Drawings. The specified rate of application of limestone may be reduced by the Engineer if pH tests indicate this to be desirable. It is the responsibility of the Contractor to obtain such tests and submit the results to the Engineer for adjustment in rates.

E. It is the responsibility of the Contractor to make one application of a maintenance fertilizer according to the recommendations listed in Table 1.

3.04 Seeding

A. Seed of the specified group shall be sown as soon as preparation of the seedbed has been completed. No seed shall be sown during high winds, nor until the surface is suitable for working and is in a proper condition. Seeding shall be performed during the dates shown in Table 1 unless otherwise approved by the Engineer. Seed mixtures may be sown together provided they are kept in a thoroughly mixed condition during the seeding operation.

B. Seed shall be uniformly sown by any approved mechanical method suitable for the slope and size of the areas to be seeded, preferably with a broadcast type seeder, windmill hand seeder or approved mechanical power drawn seed drills. Hydro-seeding and hydro-mulching may be used on steep embankments, provided full coverage is obtained. Care shall be taken to adjust the seeder for seedings at the proper rate before seeding operations are started and to maintain their adjustment during seeding. Seed in hoppers shall be agitated to prevent segregation of the various seeds in a seeding mixture.

C. Immediately after sowing, the seeds shall be covered and compacted to a depth of 1/8 to 3/8-inch by a cultipacker or suitable roller.

D. Leguminous seeds shall be inoculated prior to seeding with an approved and compatible nitrogen-fixing inoculant in accordance with the manufacturer's mixing instructions.

3.05 Mulching

A. All seeded areas shall be uniformly mulched in a continuous blanket immediately after seeding. The mulch shall be applied evenly so as to permit sunlight to penetrate and the air to circulate and at the same time shade the ground, reduce erosion and conserve soil moisture. Approximately 45 percent of the ground shall be visible through the mulch blanket.

B. One of the following mulches shall be spread evenly over the seeded areas at the following application rates:

1. Wood Cellulose Fiber: 1,400 pounds/acre.

2. Straw: 4,000 pounds/acre.

3. Stalks: 4,000 pounds/acre.

4. These rates may be adjusted at the discretion of the Engineer at no additional cost to the Owner, depending on the texture and condition of the mulch material and the characteristics of the seeded area.

C. Mulch on slopes greater than 3 to 1 ratio shall be held in place by the use of an approved mulch binder. Binder shall be thoroughly mixed and applied with the mulch. Emulsified asphalt or cutback asphalt shall be applied at the approximate rate of five gallons per 1,000 square feet as required to hold the mulch in place.

D. The Contractor shall cover structures, poles, fences and appurtenances if the mulch binder is applied in such a way that it would come in contact with or discolor the structures.

E. Mulch and binder shall be applied by suitable blowing equipment at closely controlled application rates in a manner acceptable to the Engineer.

3.06 Watering

A. The Contractor shall be responsible for maintaining the proper moisture content of the soil to insure adequate plant growth until a satisfactory stand is obtained. If necessary, watering shall be performed to maintain an adequate water content in the soil.

B. Watering shall be accomplished by hoses, tank truck or sprinklers in such a way to prevent erosion, excessive runoff and over-watered spots.

3.07 Maintenance

A. Upon completion of seeding operations, the Contractor shall clear the area of all equipment, debris and excess material and the premises shall be left in a neat and orderly condition.

B. The Contractor shall maintain all seeded areas without additional payment until final acceptance of the work by the Owner, and any regrading, refertilizing, reliming, reseeding or remulching shall be done at Contractor's own expense.

Seeding work shall be repeated on defective areas until a satisfactory uniform stand is accomplished. Damage resulting from erosion, gulleys, washouts or other causes shall be repaired by filling with topsoil, compacting and repeating the seeding work at Contractor's expense.

TABLE 1

SEEDING REQUIREMENTS

Sowing Season	Species	Rates per 1,000 Square Feet		
		Seed	Fertilizer	Lime
3/15 - 8/14	Common Bermuda (hulled) (Giant Bermuda Seed, including NK-37 is not accpetable) Annual Ryegrass	2lbs. 2 lbs.	35 lbs. 6-12-12	25 lbs.
	Total	4 lbs.		
8/15 - 3/14	Common Bermuda (unhulled) Annual Ryegrass	2lbs. 2 lbs.	45 lbs. 6-12-12	25 lbs.
	Total	4 lbs.		

END OF SECTION

Part 1 General

1.01 Scope

Sodding shall consist of establishing certain critical areas with sod as designated on the Drawings.

Part 2 Products

2.01 Sod

A. Sod shall consist of a live, dense, well-rooted growth of turf grass species as noted on the Drawings. The sod shall be free from Johnson grass, nut grass and other obnoxious grasses and shall be of suitable character for the purpose intended and for the soil in which it is to be planted. It shall be un-injured at the time of planting.

B. Sod shall be uniform in thickness, having not over 2-inches or less than 1-inch of soil.

C. Sod strips shall have a consistent width of 12 or 18-inches.

2.02 Fertilizer

A. Fertilizer (10-10-10) used in connection with sodding, shall contain 10 percent nitrogen, 10 percent phosphoric acid and 10 percent potash. The fertilizer shall be furnished in standard containers with the name, weight and guaranteed analysis of the contents clearly marked. The containers shall ensure proper protection in handling and transporting the fertilizer. All commercial fertilizer shall comply with local, state and federal fertilizer laws.

B. Ammonium nitrate shall be a standard commercial product, shall conform to the requirements for other commercial fertilizers as specified above, and shall have a minimum of 32-1/2 percent nitrogen.

2.03 Lime

Agricultural limestone shall be dolomitic and contain not less than 85 percent of calcium carbonate and magnesium carbonate combined, and shall be crushed so that at least 85 percent will pass the No. 10 mesh sieve and 50 percent will pass a No. 40 mesh screen.

2.04 Weather Limitations

Sod shall be planted only when the soil is moist and favorable to growth. No planting shall be done between October 1 and April 1 unless weather and soil conditions are considered favorable and permission is granted by the Engineer.

Part 3 Execution

3.01 Sodding

A. The area to be sodded shall be constructed to the lines and grades indicated on the Drawings or as directed by the Engineer, and the surface loosened to a depth of not less than 3-inches with a rake or other device. If necessary, it shall be sprinkled until saturated at least 1-inch in depth and kept moist until the sod is

place thereon. Immediately before placing the sod, the fertilizer shall be uniformly applied at the rate of 12 pounds of Grade 10-10-10, or equivalent, per 1,000 square feet. Agricultural limestone shall be applied at the rate of 50 pounds per 1,000 square feet.

B. The entire area shall be thoroughly covered with sod. The sod shall be placed on the prepared surface with the edges in close contact and, as far as possible, with staggered joints.

C. The sod shall be maintained moist from time of removal until reset but shall be placed as soon as practicable after removal from place where growing. Immediately after placing it shall be rolled with a light- weight roller or hand tamped to the satisfaction of the Engineer.

D. Sod on slopes steeper than 3 to 1 shall be held in place by wooden pins about 1-inch square and 6-inches long, driven through the sod into the soil until they are flush with the top of the sod.

3.02 Watering and Maintenance

A. The sod shall be watered as directed by the Engineer for a period of two weeks after which ammonium nitrate shall be applied at the rate of three pounds per 1,000 square feet and the sod given a final watering.

B. The Contractor shall not allow any equipment or material to be placed on any planted area and shall erect suitable barricades and guards to prevent Contractor's equipment, labor or the public from traveling on or over any area planted with sod.

C. It shall be the obligation of the Contractor to secure a satisfactory growth of grass before final acceptance of the Project.

END OF SECTION