BELL ROAD REUSE WATER MAINS

FULTON COUNTY, GEORGIA
PROJECT NO. R002

Located in

Land Lots: 410, 414, 415, 433 and 436
1st District ~ 1st Section
Fulton County, Georgia

GENERAL NOTES:

Site Data:

Project Name: Bell Road Reuse Water Mains
Project Address: See Map Vicinity

Design Firm: Parsons
5390 Triangle Parkway
Suite 100
Norcross, Georgia 30092
Phone: (770) 446-4900
Contact: Mr. Don Fry P.E.

Owner/Developer: Fulton County Department of Public Works
141 Pryor Street, S.W., Suite 6002
Atlanta, Georgia 30303
Phone: (404) 730-7800
Contact: Chris Browning

This route is located on F.I.R.M. panels 13121C0091E and 13121C0095E dated June 22, 1998.

VESTING OF ZONING

It is understood that the approval of a Land Disturbance Permit, in itself, does not constitute vesting of Zoning. In order for zoning to be vested by virtue of the issuance of a Land Disturbance Permit, it is necessary that substantial progress shall have been made toward the completion of a designated phase of the project, as depicted on the site plan approved as a condition of the rezoning. Substantial progress is defined as when, in the opinion of the Director of the Development Services Department, adherence to the construction schedule previously approved indicates a minimum of fifty percent (50%) of the public improvements specified for one phase, has been achieved. By acceptance of this Land Disturbance Permit, the applicant acknowledges and accepts the construction schedule incorporated herein.

DEVELOPMENT SERVICES PERMITTING DISCLAIMER

The approval of these plans and the issuance of this Land Disturbance Permit does not in any way suggest that all other requirements for the legal or appropriate operations for this activity, which may require additional permitting, have been met. The onus is on the owner/developer/builder to discover what additional permitting or approvals may be necessary to operate from this point in an appropriate and legal manner. Plan approval or permit issuance does not absolve the applicant from complying with all applicable laws, policies, standards or other permits which may be required for this project.

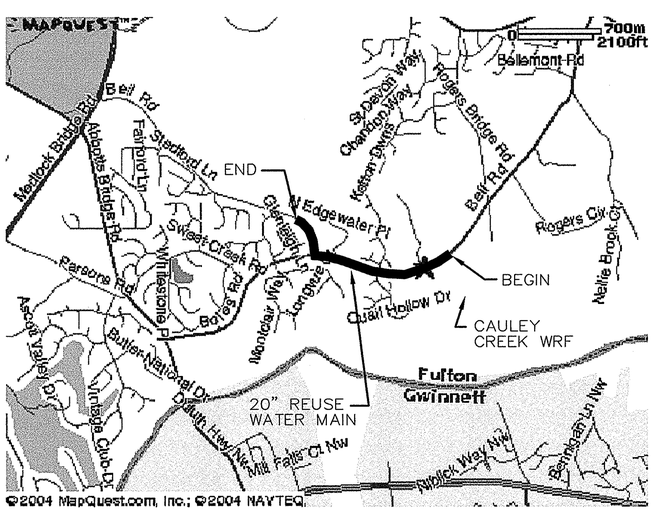

VICINITY MAP
1" = 2000'

FULTON COUNTY DEPARTMENT OF PUBLIC WORKS

141 PRYOR STREET, S.W. ~ SUITE 6001 ~ ATLANTA, GA 30303

FULTON COUNTY BOARD OF COMMISSIONERS

DISTRICT 1 (AT LARGE) CHAIR	KAREN HANDEL
DISTRICT 2 (AT LARGE)	ROBB PITTS
DISTRICT 3	LYNNE RILEY
DISTRICT 4	TOM LOWE
DISTRICT 5	EMMA I. DARNELL
DISTRICT 6	NANCY A. BOXHILL
DISTRICT 7	WILLIAM "BILL" EDWARDS

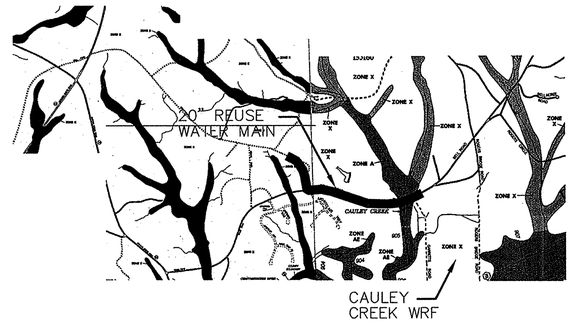

F.I.R.M. Panel No. 13121C0091E AND 13121C0095E

DRAWING INDEX

SHEET NO.	DESCRIPTION
GENERAL	
G-01	Title Sheet and Drawing Index
G-02	General Notes
CIVIL	
C-01	Plan and Profile Sta: 0+00 to 12+00
C-02	Plan and Profile Sta: 12+00 to 25+00
C-03	Plan and Profile Sta: 25+00 to 36+00
C-04	Plan and Profile Sta: 36+00 to 49+00
C-05	Plan and Profile Sta: 49+00 to End
CD-01	Civil Details I
CD-02	Civil Details II
CD-03	Civil Details III
CD-04	Civil Details IV
CD-05	Erosion Control Details I
CD-06	Erosion Control Details II
CD-07	Erosion Control Details III
CD-08	Civil Details V

TRANSPORTATION NOTES

A. Signing, striping, marking, and high level warning devices to be placed as shown and/or as directed by the Fulton County Traffic Engineer and/or Fulton County Inspector. This traffic control plan is subject to change by Fulton County Traffic Engineer.

B. Warning devices shall be placed prior to the commencement of any road improvement work on county roads and shall remain in place until the conclusion of all signing and striping work.

C All signs and warning devices shall be either Type I Barricades or Drums with warning lights on every other device, and shall conform with the Manual of Uniform Traffic Control Devices (MUTCD) Standards and Fulton County for color, size, reflectivity, height, and placement.

D. Spacing of warning devices in feet shall be equal to the posted speed of the road in mph. (i.e., 30 feet spacing for 30 mph speed limit.)

E. All signs shall conform with the Manual on Uniform Traffic Control Devices (MUTCD) Standards and Fulton County for color, size, reflectivity, height, and placement.

F. Striping (white and yellow) and arrow marking shall be applied using Fulton County or Georgia DOT standard thermoplastic.

G. When necessary, existing striping shall be removed by grinding, unless specified by the Fulton County Traffic Engineer.

H. All signs must be installed concurrently with the performance of the striping work.

I. Contact Fulton County Traffic Engineer (404)-730-7480 one week prior to commencement of any striping work.

J. When equipment is idle, e.g. when work is stopped and flagmen are not on site, Contractor shall not place equipment or materials where traffic sight distance will be impeded, including driveways and entrances.

K. See Drawing CD-08 for road section details.

ARC RIVER CORRIDOR NOTES

A. This project is not within the Chattahoochee River Corridor. No land disturbance shall occur outside the approved limits.

CALL BEFORE YOU DIG

overhead — UTILITIES PROTECTION CENTER OF GEORGIA — underground

1-800-282-7411

24 - HOUR EMERGENCY CONTACT

THIS PROJECT WILL BE COMPETITIVELY BID. THE SUCCESSFUL CONSTRUCTION CONTRACTOR WILL NAME THE 24-HOUR CONTACT PERSON WITH THE CONTACT INFORMATION AT THE TIME OF NOTICE TO PROCEED.

ALL EROSION AND SEDIMENTATION CONTROL, AND TREE PROTECTION MEASURES SHALL BE INSTALLED PRIOR TO GRADING.

SECTION	SIGNATURE	APPROVAL DATE
PLANNING		
DRAINAGE		
HYDROLOGY		
FLOOD PLAIN		
EROSION CONTROL		
WASTE WATER		
WATER		
LANDSCAPE/TREE PROTECTION		
TRAFFIC		
HEALTH		
RIVER CORRIDOR		

Rev	Date	Description	By
0	10/15/04	ISSUED FOR BID	TAC

Job No. 202323
Designed TJG/NWJ
Drawn TJG/NWJ
Checked TJG
Reviewed TAC
Approved TAC
Reg. No.
Date 7/30/04

Issue Certification

GEORGIA REGISTERED PROFESSIONAL ENGINEER THOMAS A. CAMPBELL 7/30/2004

FULTON COUNTY DEPARTMENT OF PUBLIC WORKS
141 PRYOR STREET, S.W. ~ SUITE 6001 ~ ATLANTA, GA 30303

PARSONS
5390 Triangle Parkway, Suite 100,
Norcross, GA 30092, (770) 446-4900

BELL ROAD REUSE WATER EXTENSION - PHASE I

TITLE SHEET AND DRAWING INDEX

DRAWING NO.
G-01

ZONING:

Property Tax Identification Number N/A

THIS PROJECT IS LOCATED IN PUBLIC RIGHTS-OF-WAY.

GENERAL NOTES

1. This site is a linear pipeline project of approximately 4930 LF. Assuming a disturbed area of approximately 10 feet per foot, this site will disturbed approximately 1.13 acre.
2. All construction must conform to Fulton County Standards and Specifications, whether or not review comments were made.
3. All silt barriers must be placed as access is obtained during clearing. No grading shall be done until site barrier installation and detention facilities are constructed.
4. Silt barriers to be placed as shown and/or as directed by project engineer and/or Fulton County Inspector.
5. As-built drawing of roadways, storm drains, sewers and water; field approval by inspector; and all applicable bonds required prior to acceptance or issuance of a certificate of occupancy.
6. Bell Road is a county maintained highway.
7. Off street parking shall be provided and maintained throughout construction.
8. The project is referenced to an existing Fulton County G.I.S. Monument.
9. Survey performed by Donaldson, Garrett and Associates, Inc.
10. Signing and striping to be provided by developer according to Fulton County standards.
11. All fill areas, including trench backfill must be compacted to a minimum 95 % standard proctor. A report from geotechnical engineer may be required by the Construction Inspector for all fill areas within the Right-of-way.

REUSE FORCE MAIN NOTES:

1. All reuse water pipe construction must conform to Fulton County's standards and specifications.
2. Compaction of the backfill of all trenches shall be compacted to the density of not less than 96 percent of the soil's standard Proctor maximum dry density as determined by ASTM D698. The upper foot of trench backfill which will subsequently support pavements or grade slabs should be further compacted to at least 95 percent of the soil's standard Proctor maximum dry density. Backfill material shall be free from roots, stumps, or other foreign debris, and shall be placed at or near optimum moisture. Correction of any trench settlement within a year from the date of approval will be the responsibility of the Contractor.
3. Contractor to field verify location and invert elevations of pipe for connection to existing systems.
4. Reuse Water Force Main shall be Ductile Iron Pipe.
5. For all construction along and/or across waterways, banks protection and stabilization shall be required as per Fulton County erosion laws.
6. Thrust Blocking per Detail CD-04 shall be used on all horizontal and vertical bends and fittings for Force Mains.
7. Prior to the acceptance and approval of any asphaltic concrete binder and/or topping which is installed for the purpose of Fulton County maintenance, a representative of this department may require one or all of the following tests: 1) coring, 2) extraction, 3) compaction, 4) density. The frequency and location of these tests will be left to the discretion of the inspector.

TREE PRESERVATION/PROTECTION NOTES:

1. ALL BUFFER AREAS SHALL BE CLEARLY IDENTIFIED BY FLAGGING AND/OR FENCING PRIOR TO COMMENCEMENT OF ANY LAND DISTURBANCE.
2. ALL TREE PROTECTION MEASURES SHALL BE INSTALLED PRIOR TO GRADING.
3. ACTIVE PROTECTIVE TREE FENCING SHALL BE INSTALLED ALONG THE OUTER EDGE OF AND COMPLETELY SURROUNDING THE CRITICAL ROOT ZONES OF ALL SPECIMEN TREES OR STANDS OF TREES, OR OTHERWISE DESIGNATED TREE PROTECTION ZONES PRIOR TO ANY LAND DISTURBANCE.
4. PASSIVE FORMS OF TREE PROTECTION MAY BE UTILIZED TO DELINEATE TREE SAVE AREAS WHICH ARE REMOVED FROM AREAS OF LAND DISTURBANCES.
5. ALL TREE PROTECTION ZONES SHALL BE DESIGNATED WITH "TREE SAVE AREA" SIGNS.
6. WHEN DIGGING NEAR TREES, THE CONTRACTOR SHALL PRUNE ALL EXPOSED ROOTS ONE (1) INCH IN DIAMETER AND LARGER ON THE SIDE OF THE TRENCH ADJACENT TO THE TREES. PRUNING SHALL CONSIST OF MAKING A CLEAN CUT FLUSH WITH THE SIDE OF THE TRENCH TO PROMOTE NEW ROOT GROWTH.
7. PRUNING OF TREE LIMBS TO PROVIDE CLEARANCE FOR EQUIPMENT AND MATERIALS SHALL BE DONE ACCORDING TO STANDARD ARBORICULTURAL PRACTICE.
8. CONTACT THE DEPARTMENT OF ENVIRONMENT & COMMUNITY DEVELOPMENT AT 404-730-7532, 770-777-6509, OR 404-730-7531 FOR SITE INSPECTION UPON COMPLETION OF LANDSCAPE INSTALLATION (STREAM BANK REVEGITATION).
9. PROVISIONS FOR TREE PROTECTION ON THE SITE SHALL BE, AS A MINIMUM, IN CONFORMANCE WITH THE REQUIREMENTS OF THE LATEST EDITION OF THE FULTON COUNTY TREE PRESERVATION ORDINANCE AND ADMINISTRATIVE GUIDELINES PERTAINING TO TREE PROTECTION.
10. CONTACT THE DEPARTMENT OF ENVIRONMENT & COMMUNITY DEVELOPMENT AT 404-730-7532, 770-777-6509, OR 404-730-7531 TO ARRANGE A PRECONSTRUCTION MEETING WITH THE COUNTY ARBORIST PRIOR TO ANY LAND DISTURBANCE. ALL REQUIRED TREE FENCE MUST BE INSTALLED PRIOR TO THIS MEETING.
11. UNDISTURBED BUFFERS SHALL BE REPLANTED TO BUFFER STANDARDS WHERE SPARSELY VEGETATED OR WHERE DISTURBED AT APPROVED UTILITY CROSSINGS. REPLANTING IS SUBJECT TO COUNTY ARBORIST APPROVAL.

GPS MONUMENTS USED

F-334 – GPS N-1470206.6380, E-2299183.3650 EL. = 1027.360

F-434 – AZIMUTH MARK N-1470581.3430, E-2298117.3710 EL. = 1016.891

Wetland Certification:

The design professional, whose seal appears hereon, certifies the following:

1.) The National Wetland Inventory Maps have been consulted; and,

2.) The appropriate plan sheet [ ] DOES / [X] DOES NOT indicate areas of United States Army Corps of Engineers jurisdictional wetlands as as shown on the maps; and,

3.) If wetlands are indicated, the land owner or developer has been advised that land disturbance or protected wetlands shall not occur unless the appropriate federal wetlands alteration ("Section 404") permit has been obtained.

LEGEND

	EXISTING RIGHT-OF-WAY	G	GAS LINE
	EXISTING PROPERTY LINE	GV	GAS VALVE
	CONTOUR LINE	GM	GAS METER
	EXISTING STREAM	W	WATER LINE
PF	IRON PIN FOUND	U	UNDERGROUND UTILITY LINE
CMF	CONCRETE MONUMENT FOUND		UNDERGROUND MARKER
	TREE	WV	WATER VALVE
	BUSHES	WM	WATER METER
	FENCE	FH	FIRE HYDRANT
	HEADWALL		CATCH BASIN
	OVERHEAD POWER LINE	DI	DROP INLET
	GUY WIRE		STORM DRAIN MANHOLE
PP	ELECTRICAL POWER POLE		STORM/SEWER LINE
E	ELECTRICAL MANHOLE	S	SANITARY SEWER MANHOLE
TP	TELEPHONE POLE		TRAFFIC SIGN
U	UTILITY MANHOLE		SILT FENCE
	TRAFFIC POLE		

EMERGENCY PHONE NUMBERS

AMBULANCE : 911
POLICE : 911
FIRE : 911

FULTON COUNTY : (404) 730-7800

PARSONS : (770) 446-4900

UTILITY PROTECTION SERVICE: 1-800-282-7411

CONSTRUCTION SCHEDULE

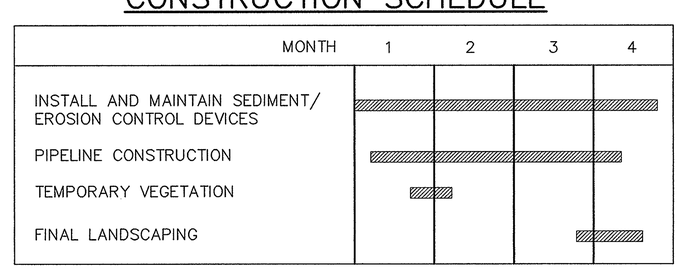

Rev	Date	Description	By
0	10/16/06	ISSUED FOR BID	TAC

Job No. 202323
Designed TJG/MWJ
Drawn TJG/MWJ
Checked TJG
Reviewed TAC
Approved TAC
Reg. No.
Date 7/30/04

Issue Certification

FULTON COUNTY DEPARTMENT OF PUBLIC WORKS
141 PRYOR STREET, S.W. ~ SUITE 6001 ~ ATLANTA, GA 30303

PARSONS
5390 Triangle Parkway, Suite 100,
Norcross, GA 30092, (770) 446-4900

BELL ROAD REUSE WATER EXTENSION - PHASE I

GENERAL NOTES

DRAWING NO.
G-02

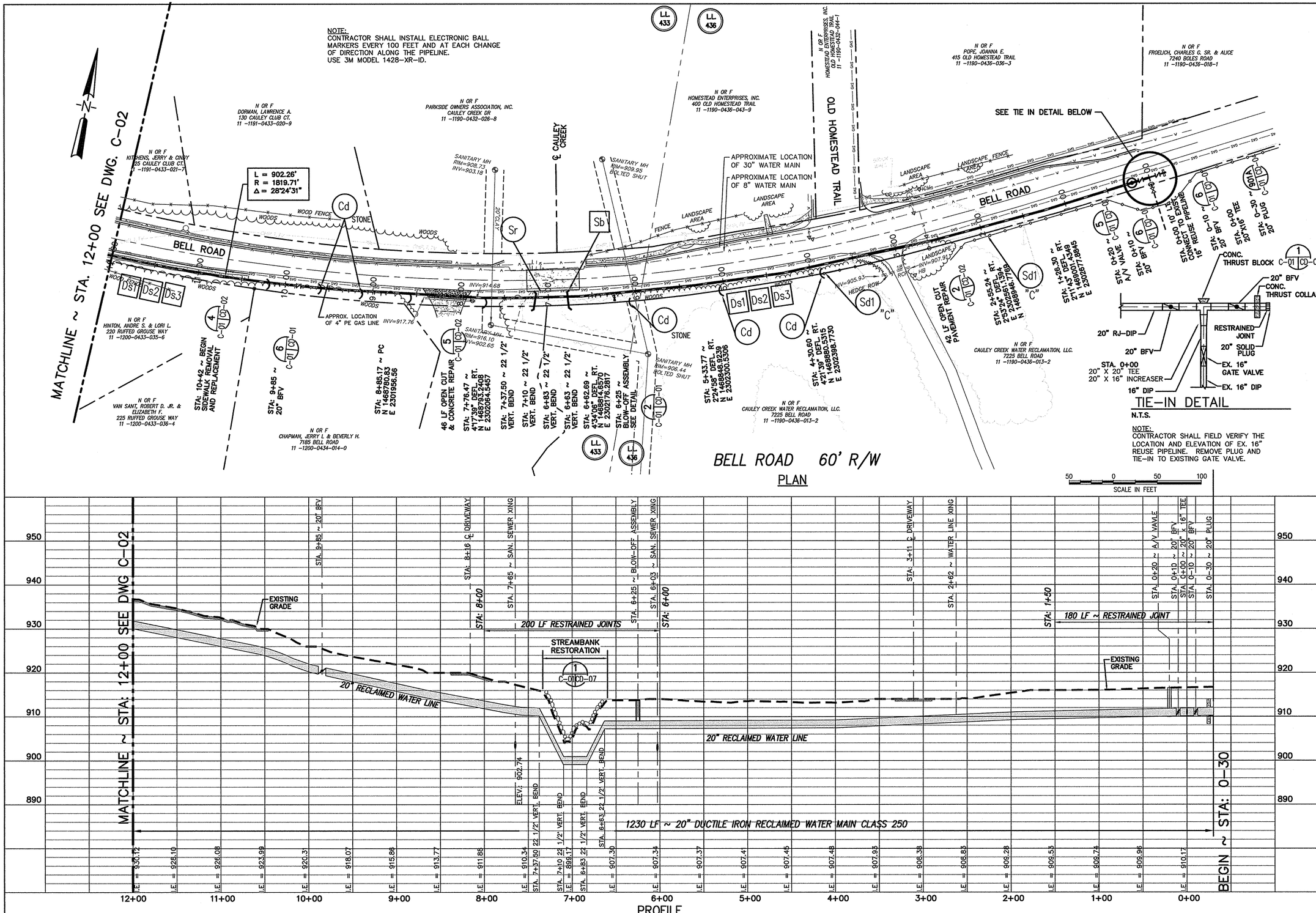

Rev	Date	Description	By
0	10/16/06	ISSUED FOR BID	TAC

Job No. 202323
Designed TJG/AWW
Drawn TJG/AWW
Checked TJG
Reviewed TAC
Approved TAC
Reg. No.
Date 7/30/04

Issue Certification

FULTON COUNTY DEPARTMENT OF PUBLIC WORKS
141 PRYOR STREET, S.W. ~ SUITE 6001 ~ ATLANTA, GA 30303

PARSONS
5390 Triangle Parkway, Suite 100, Norcross, GA 30092, (770) 446-4900

BELL ROAD REUSE WATER EXTENSION – PHASE I

PLAN AND PROFILE STA. 0+00 TO 12+00

DRAWING NO.
C-01

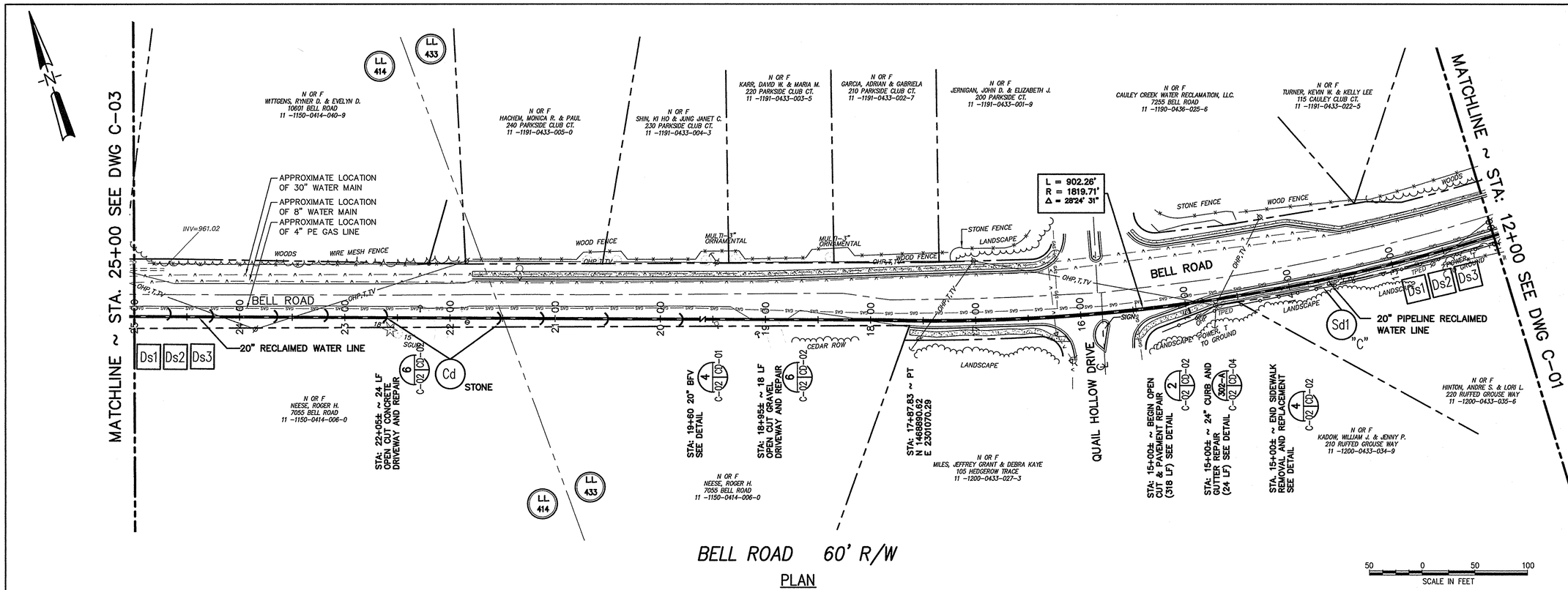

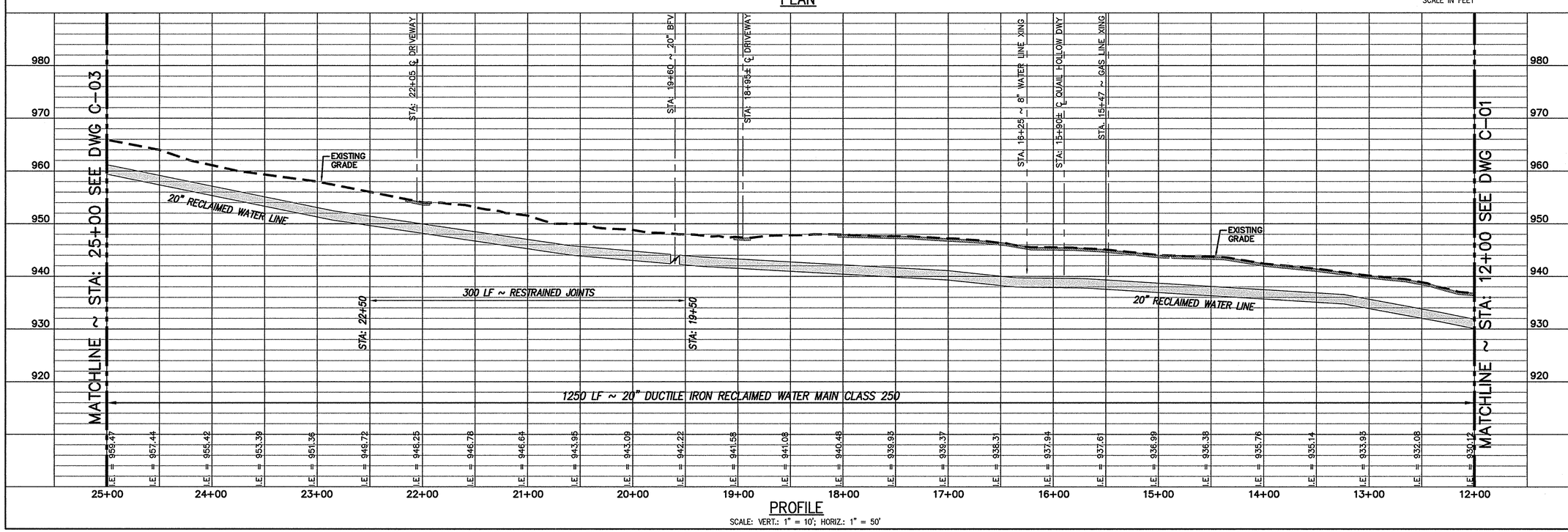

Rev	Date	Description	By
0	10/16/06	ISSUED FOR BID	TAC

Job No. 202323
Designed TJG/MWJ
Drawn TJG/MWJ
Checked TJG
Reviewed TAC
Approved TAC
Reg. No.
Date 7/30/04

Issue Certification

GEORGIA REGISTERED No. 14980 PROFESSIONAL ENGINEER THOMAS A. CORBIN

FULTON COUNTY DEPARTMENT OF PUBLIC WORKS
141 PRYOR STREET, S.W. ~ SUITE 6001 ~ ATLANTA, GA 30303

PARSONS
5390 Triangle Parkway, Suite 100,
Norcross, GA 30092, (770) 446-4900

BELL ROAD REUSE WATER EXTENSION – PHASE I

PLAN AND PROFILE
STA. 12+00 TO 25+00

DRAWING NO.
C-02

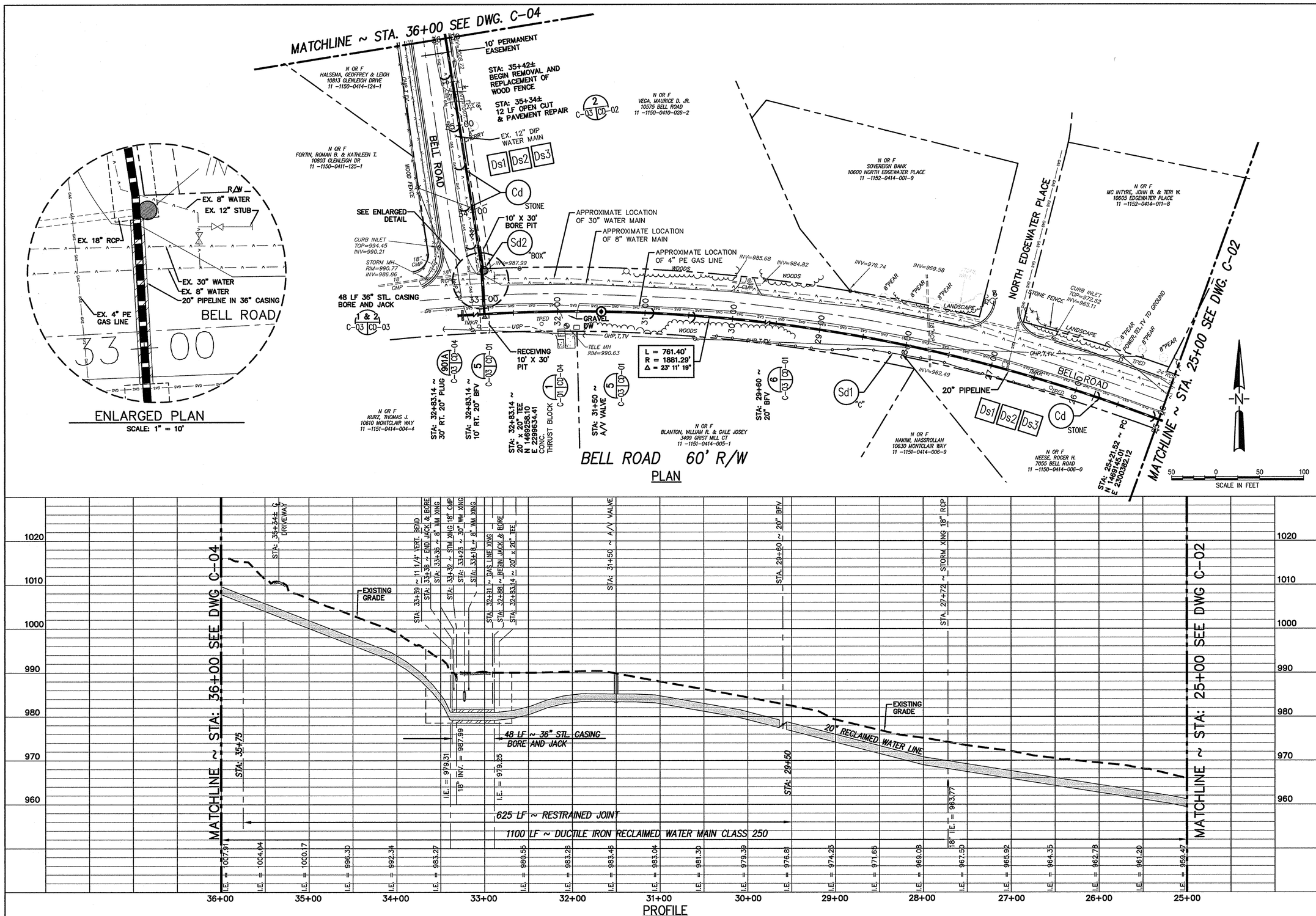

Rev	Date	Description	By
0	10/16/06	ISSUED FOR BID	TAC

Job No. 202323
Designed TJG/MWJ
Drawn TJG/MWJ
Checked TJG
Reviewed TAC
Approved TAC
Reg. No.
Date 7/30/04

Issue Certification

FULTON COUNTY DEPARTMENT OF PUBLIC WORKS
141 PRYOR STREET, S.W. ~ SUITE 6001 ~ ATLANTA, GA 30303

PARSONS
5390 Triangle Parkway, Suite 100,
Norcross, GA 30092, (770) 446-4900

BELL ROAD REUSE WATER EXTENSION – PHASE I

PLAN AND PROFILE
STA. 25+00 TO 36+00

DRAWING NO.
C-03

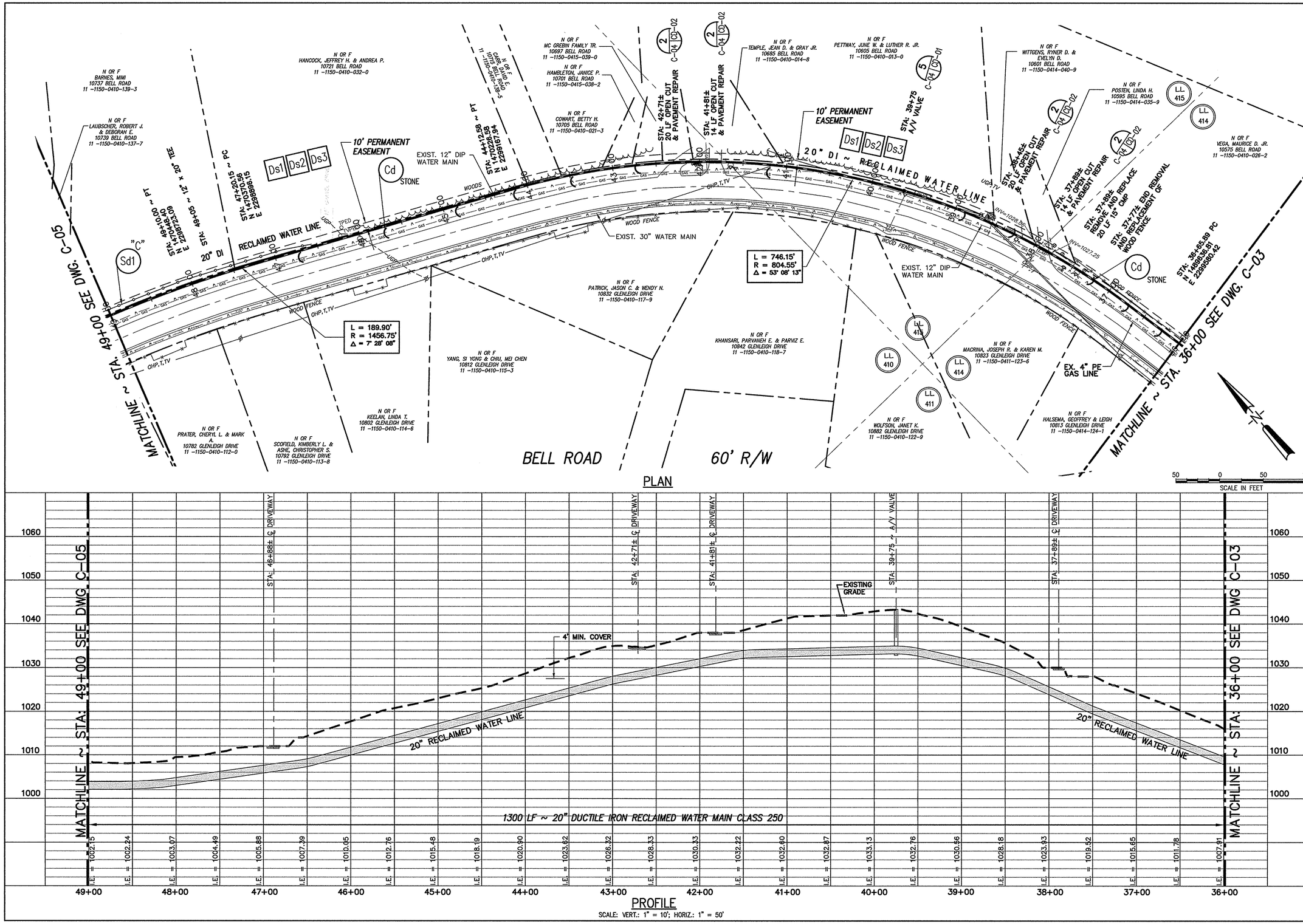

Rev	Date	Description	By
0	10/15/04	ISSUED FOR BID	TAC

Job No. 202323
Designed TJG/MWJ
Drawn TJG/MWJ
Checked TJG
Reviewed TAC
Approved TAC
Reg. No. 7/30/04 Date

Issue Certification

FULTON COUNTY DEPARTMENT OF PUBLIC WORKS
141 PRYOR STREET, S.W. ~ SUITE 6001 ~ ATLANTA, GA 30303

PARSONS
5390 Triangle Parkway, Suite 100,
Norcross, GA 30092, (770) 446-4900

BELL ROAD REUSE WATER EXTENSION - PHASE I

PLAN AND PROFILE
STA. 36+00 TO 49+00

DRAWING NO.
C-04

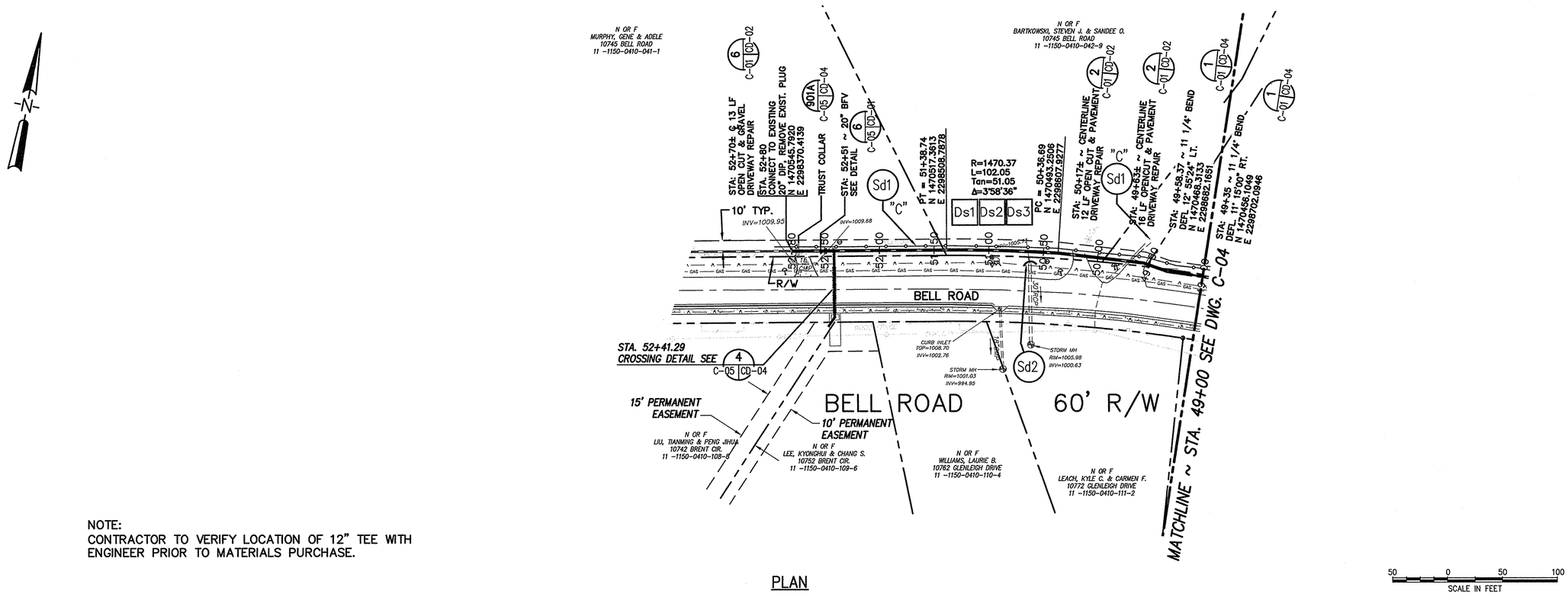

NOTE:
CONTRACTOR TO VERIFY LOCATION OF 12" TEE WITH ENGINEER PRIOR TO MATERIALS PURCHASE.

PLAN

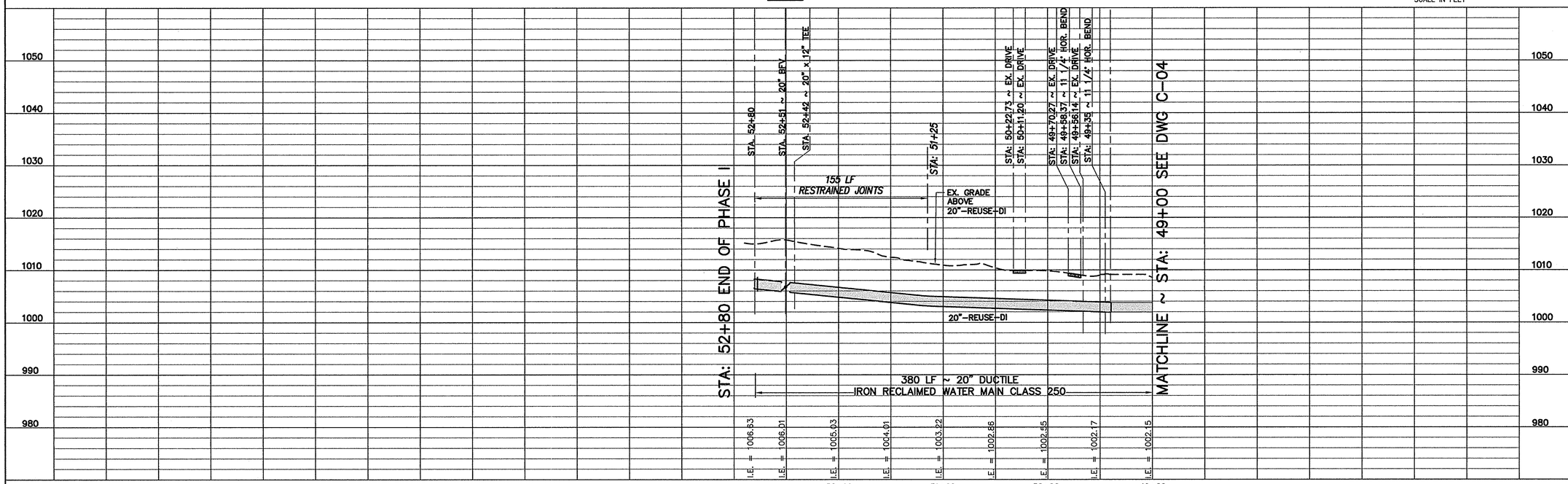

PROFILE
SCALE: VERT.: 1" = 10'; HORIZ.: 1" = 50'

Rev	Date	Description	By
0	10/16/06	ISSUED FOR BID	TAC

Job No. 202323
Designed TJG/MWJ
Drawn TJG/MWJ
Checked TJG
Reviewed TAC
Approved TAC
Reg. No. 7/30/04
Date

Issue Certification

GEORGIA REGISTERED No. 14580 PROFESSIONAL ENGINEER THOMAS A. DORBIN

FULTON COUNTY DEPARTMENT OF PUBLIC WORKS
141 PRYOR STREET, S.W. ~ SUITE 6001 ~ ATLANTA, GA 30303

PARSONS
5390 Triangle Parkway, Suite 100,
Norcross, GA 30092, (770) 446-4900

BELL ROAD REUSE WATER EXTENSION – PHASE I

PLAN AND PROFILE
STA. 49+00 TO END

DRAWING NO.
C-05

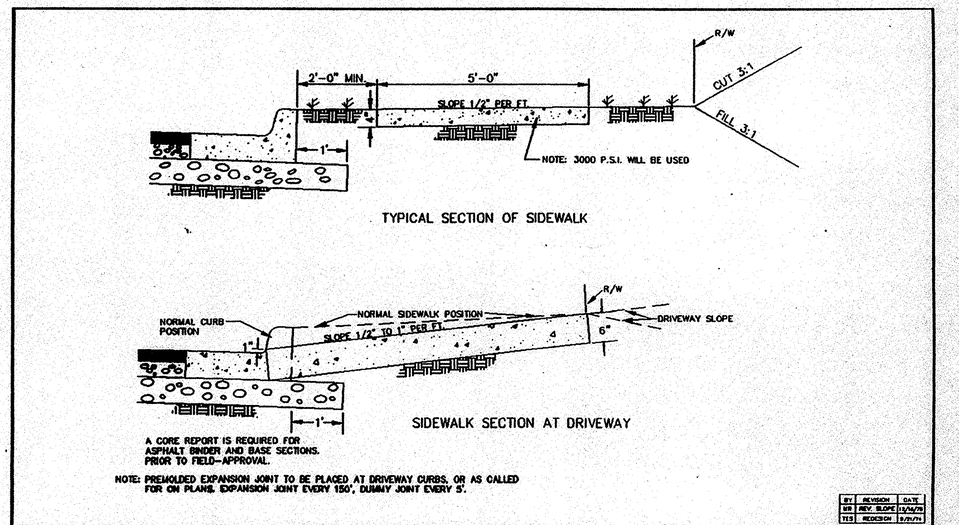

FULTON COUNTY DETAIL 303

NOT TO SCALE

1 / CD-01

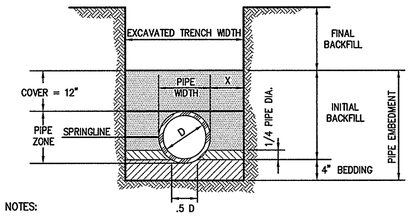

NOTES:

1. BACKFILL WITHIN THE PIPE ZONE SHALL CONSIST OF SELECT SOIL FREE OF ORGANIC AND DELETERIOUS MATERIAL PLACED IN 8" LOOSE LAYERS AND COMPACTED TO 90% MAXIMUM DENSITY PER ASTM D698.
2. COVER AND FINAL BACKFILL TO BE MECHANICALLY COMPACTED TO THE TOP OF THE TRENCH TO 96% MAXIMUM DENSITY AS PER ASTM D698 WHERE UNDER PAVEMENT OR STRUCTURES AND TO 80% OTHERWISE.
3. BEDDING AND 1/4 PIPE DIAMETER SHALL BE #57 STONE.
4. SEE FULTON COUNTY STANDARD DETAIL 905 FOR PAVEMENT REPAIR.

PIPE DIA.–D INCHES	X–MAXIMUM INCHES
6"–21"	12"
24"–48"	.33D+4"

PIPE BEDDING DIP

PIPE BEDDING DETAILS

SCALE: 1/2" = 1'-0"

3 / CD-01

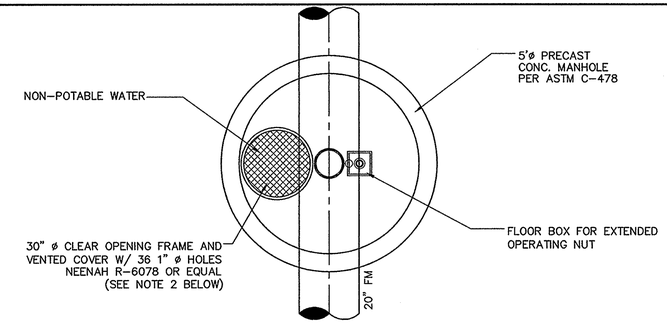

PLAN

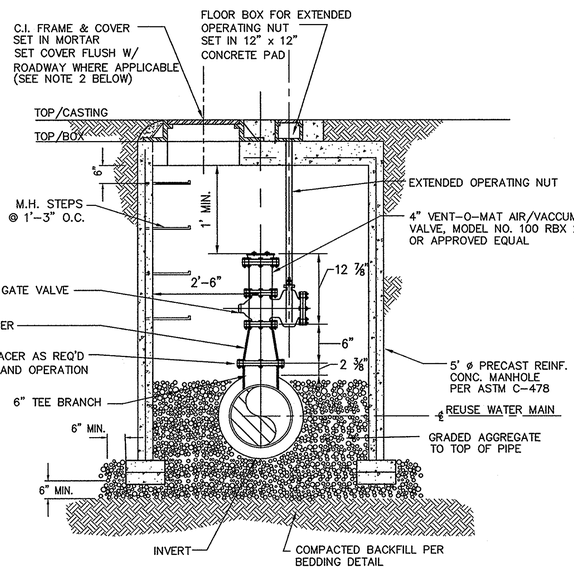

PROFILE

NOTES:

1. JOINTS BETWEEN ALL MANHOLE SECTIONS SHALL BE SEALED WITH BUTYL SEALANT.
2. PRECAST MANHOLE INCLUDING CONCRETE TOP, CAST IRON FRAME AND COVER SHALL BE DESIGNED AND FABRICATED TO WITHSTAND H-20 LOADING.

AIR/VACUUM VALVE INSTALLATION DETAIL

SCALE: N.T.S.

5 / C-02, C-03 / CD-01

NOTES:

1. GATE VALVE AND PIPING SHALL BE 6" UNLESS SHOWN OTHERWISE
2. PROVIDE RETAINER GLANDS FOR ALL MECHANICAL JOINT CONNECTIONS
3. BLOWOFF SHALL BE ORIENTED TO DISCHARGE INTO AN EXISTING SANITARY MANHOLE AS APPROVED BY THE ENGINEER

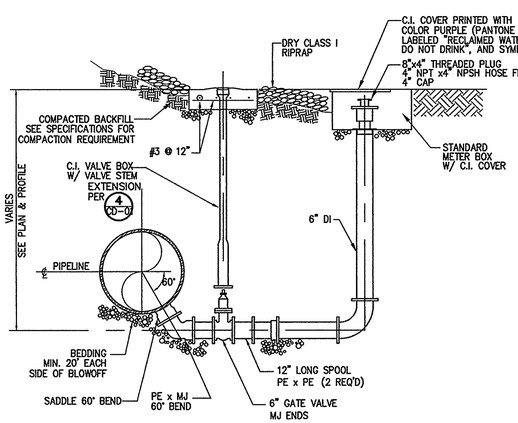

NOTE: ALL PIPE AND FITTINGS TO RESTRAINED JOINT.

BLOWOFF ASSEMBLY DETAIL

NOT TO SCALE

2 / C-01 / CD-01

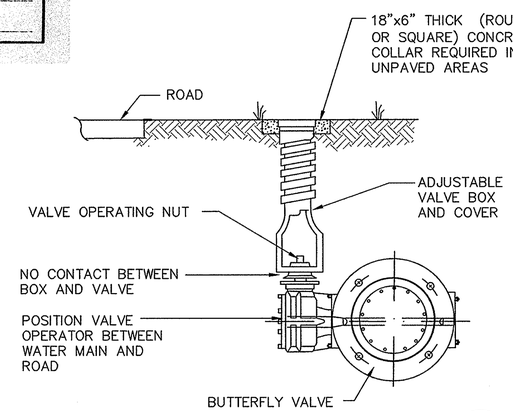

BUTTERFLY VALVE INSTALLATION DETAIL

NOT TO SCALE

6 / ALL / CD-01

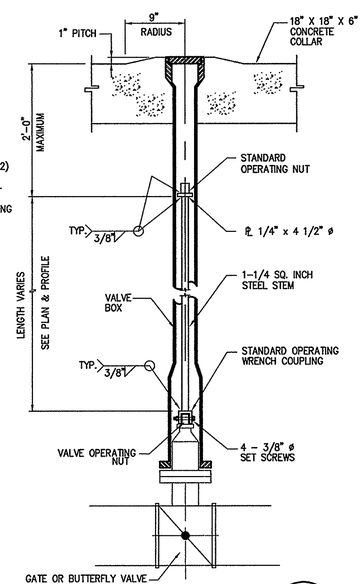

VALVE STEM DETAIL

NOT TO SCALE

4 / CD-01 / CD-01

Rev	Date	Description	By
0	10/16/06	ISSUED FOR BID	TAC

Job No. 202323
Designed TJG/AWM
Drawn TJG/AWM
Checked TJG
Reviewed TAC
Approved TAC
Reg. No. ____
Date 7/30/04

Issue Certification

THOMAS A. CRAIGIA+ - GEORGIA REGISTERED ENGINEER No. 14398

FULTON COUNTY DEPARTMENT OF PUBLIC WORKS
141 PRYOR STREET, S.W. ~ SUITE 6001 ~ ATLANTA, GA 30303

PARSONS
5390 Triangle Parkway, Suite 100,
Norcross, GA 30092, (770) 446-4900

BELL ROAD REUSE WATER EXTENSION – PHASE I

CIVIL DETAILS I

DRAWING NO.
CD-01

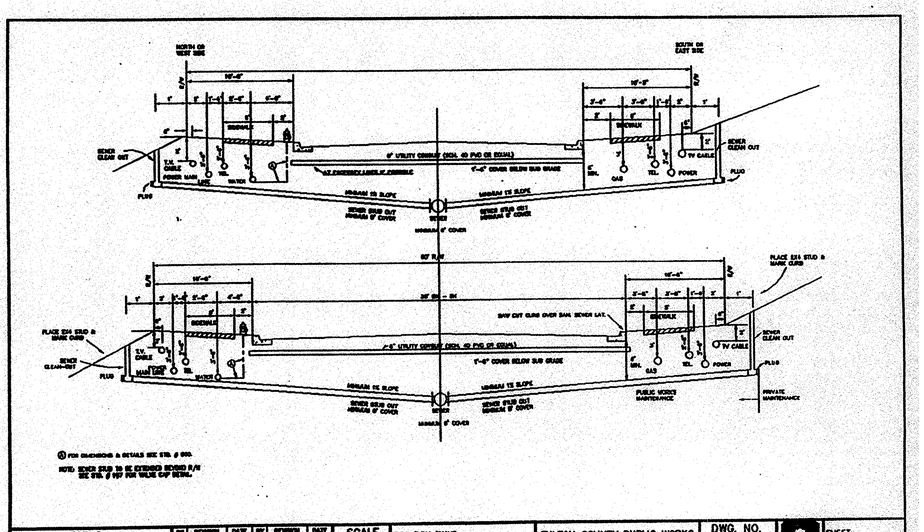

LEGEND	SCALE	DSG/DRN/CHKD:	FULTON COUNTY PUBLIC WORKS	DWG. NO.	SHEET:
UNDERGROUND UTILITY TYPICAL CROSS SECTION	1"=	APPROVED: H.A. FRANDSEN	141 PRYOR ST. ATLANTA, GA. 30303	903	OF:
		DATE:	404-730-7400 FAX: 730-6325		

FULTON COUNTY DETAIL 903

NOT TO SCALE

1 / CD-02

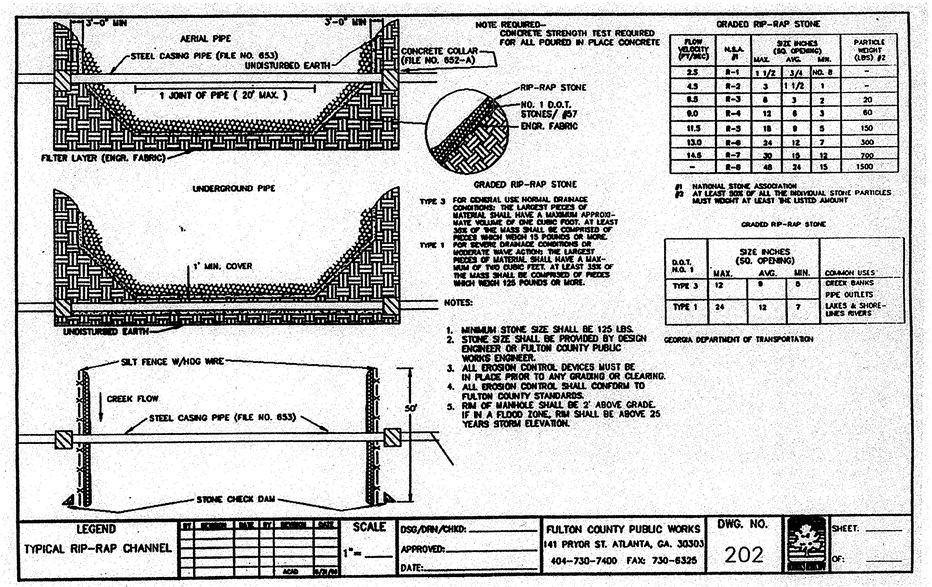

TYPE 3 FOR GENERAL USE NORMAL DRAINAGE CONDITIONS: THE LARGEST PIECES OF MATERIAL SHALL HAVE A MAXIMUM APPROXIMATE VOLUME OF ONE CUBIC FOOT. AT LEAST 30% OF THE MASS SHALL BE COMPRISED OF PIECES WHICH WEIGH 15 POUNDS OR MORE.

TYPE 1 FOR SEVERE DRAINAGE CONDITIONS OR MODERATE WAVE ACTION: THE LARGEST PIECES OF MATERIAL SHALL HAVE A MAXIMUM OF TWO CUBIC FEET. AT LEAST 30% OF THE MASS SHALL BE COMPRISED OF PIECES WHICH WEIGH 125 POUNDS OR MORE.

NOTES:

1. MINIMUM STONE SIZE SHALL BE 125 LBS.
2. STONE SIZE SHALL BE PROVIDED BY DESIGN ENGINEER OR FULTON COUNTY PUBLIC WORKS ENGINEER.
3. ALL EROSION CONTROL DEVICES MUST BE IN PLACE PRIOR TO ANY GRADING OR CLEARING.
4. ALL EROSION CONTROL SHALL CONFORM TO FULTON COUNTY STANDARDS.
5. RIM OF MANHOLE SHALL BE 2' ABOVE GRADE. IF IN A FLOOD ZONE, RIM SHALL BE ABOVE 25 YEARS STORM ELEVATION.

GRADED RIP-RAP STONE

FLOW VELOCITY (FT/SEC)	N.S.A. #1	SIZE INCHES (SQ. OPENING) MAX.	AVG.	MIN.	PARTICLE WEIGHT (LBS) #2
2.5	R-1	1 1/2	3/4	NO. 8	–
4.5	R-2	3	1 1/2	1	–
8.5	R-3	6	3	2	20
9.0	R-4	12	6	3	60
11.5	R-5	18	9	5	150
13.0	R-6	24	12	7	300
14.5	R-7	30	15	12	700
–	R-8	48	24	15	1500

#1 NATIONAL STONE ASSOCIATION
#2 AT LEAST 50% OF ALL THE INDIVIDUAL STONE PARTICLES MUST WEIGHT AT LEAST THE LISTED AMOUNT

GRADED RIP-RAP STONE

D.O.T. NO. 1	SIZE INCHES (SQ. OPENING) MAX.	AVG.	MIN.	COMMON USES
TYPE 3	12	6	6	CREEK BANKS PIPE OUTLETS
TYPE 1	24	12	7	LAKES & SHORE-LINES RIVERS

GEORGIA DEPARTMENT OF TRANSPORTATION

LEGEND	SCALE	DSG/DRN/CHKD:	FULTON COUNTY PUBLIC WORKS	DWG. NO.	SHEET:
TYPICAL RIP-RAP CHANNEL	1"=	APPROVED:	141 PRYOR ST. ATLANTA, GA. 30303	202	OF:
		DATE:	404-730-7400 FAX: 730-6325		

FULTON COUNTY DETAIL 202

NOT TO SCALE

3 / CD-02

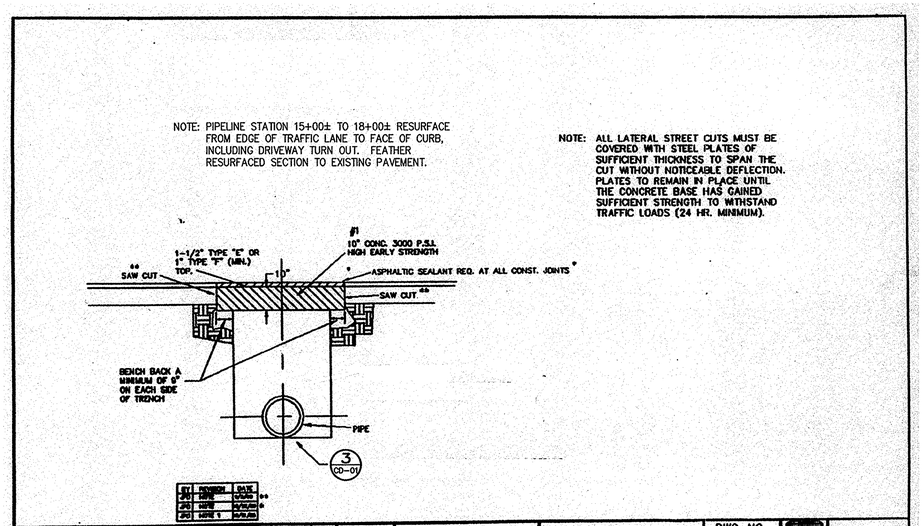

LEGEND	SCALE	DSG/DRN/CHKD:	FULTON COUNTY PUBLIC WORKS	DWG. NO.	SHEET:
BACKFILLING UTILITY CUTS & REPLACING PAVEMENT	1"=	APPROVED: H.A. FRANDSEN	141 PRYOR ST. ATLANTA, GA. 30303	905	OF:
		DATE:	404-730-7400 FAX: 730-6325		

FULTON COUNTY DETAIL 905

NOT TO SCALE

2 / CD-02

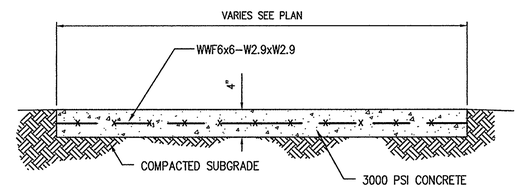

NOTE:

CONSTRUCTION JOINTS SPACING AND EXPANSION JOINT SPACING W/ 1/2" EXPANSION JOINT MATERIAL.

TYPICAL SIDEWALK DETAIL

NOT TO SCALE

4 / CD-02

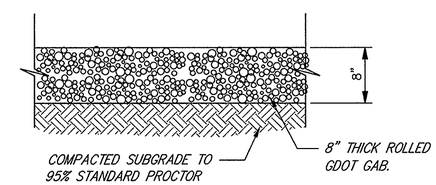

GRAVEL DRIVEWAY REPAIR

NOT TO SCALE

6 / CD-02

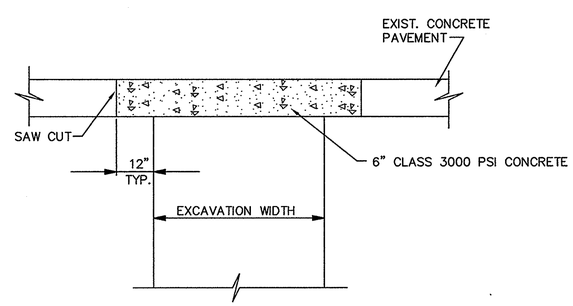

CONCRETE D/W PAVEMENT REPAIR DETAIL

NOT TO SCALE

5 / CD-02

Rev	Date	Description	By
0	10/6/04	ISSUED FOR BID	TAC

Job No. 202323
Designed TJG/MWJ
Drawn TJG/MWJ
Checked TJG
Reviewed TAC
Approved TAC
Reg. No.
Date 7/30/04

Issue Certification

GEORGIA REGISTERED No. 14398 PROFESSIONAL ENGINEER THOMAS A. GRAY 11/18/2004

FULTON COUNTY DEPARTMENT OF PUBLIC WORKS
141 PRYOR STREET, S.W. ~ SUITE 6001 ~ ATLANTA, GA 30303

PARSONS
5390 Triangle Parkway, Suite 100,
Norcross, GA 30092, (770) 446-4900

BELL ROAD REUSE WATER EXTENSION – PHASE I

CIVIL DETAILS II

DRAWING NO.
CD-02

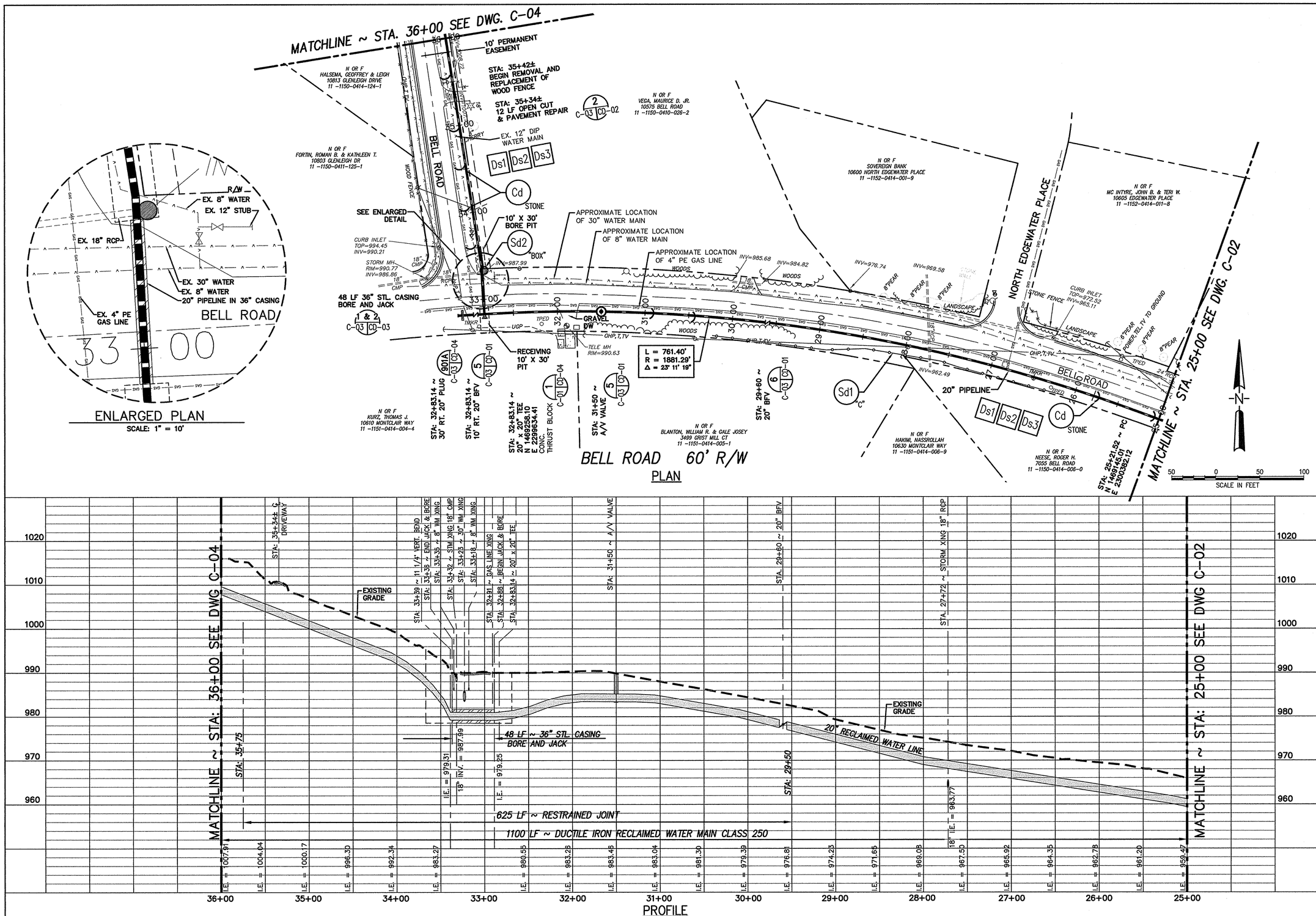

Rev	Date	Description	By
0	10/16/06	ISSUED FOR BID	TAC

Issue Certification

Job No. 202323
Designed TJG/MWJ
Drawn TJG/MWJ
Checked TJG
Reviewed TAC
Approved TAC
Reg. No.
Date 7/30/04

FULTON COUNTY DEPARTMENT OF PUBLIC WORKS
141 PRYOR STREET, S.W. ~ SUITE 6001 ~ ATLANTA, GA 30303

PARSONS
5390 Triangle Parkway, Suite 100,
Norcross, GA 30092, (770) 446-4900

BELL ROAD REUSE WATER EXTENSION – PHASE I

PLAN AND PROFILE
STA. 25+00 TO 36+00

DRAWING NO.
C-03

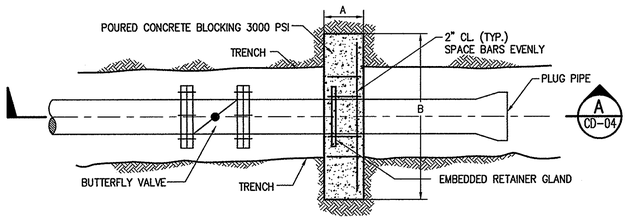

PLAN

SCALE: N.T.S.

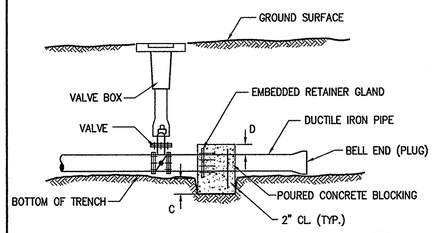

SECTION (A / CD-04)

SCALE: N.T.S.

PIPE SIZE	A (IN)	B (IN)	C (IN)	D (IN)	REQ'D. STEEL EA. WAY
8"	10	32	12	8	4 – #4
10"	12	40	15	10	4 – #4
12"	14	54	24	12	4 – #4
16"	18	60	30	16	6 – #4
20"	24	100	40	20	8 – #5

NOTES:

1. ANCHOR BLOCKING DETAIL TO BE USED AT THE END OF ANY COUNTY ROAD WHERE REUSE WATER MAIN MAY BE EXTENDED AT A FUTURE DATE.
2. ALL CONCRETE TO BE 3000 PSI.
3. ALL STEEL TO BE 60,000 PSI.

MAIN EXTENSION BLOCKING DETAIL (901A / CD-04)

SCALE: N.T.S.

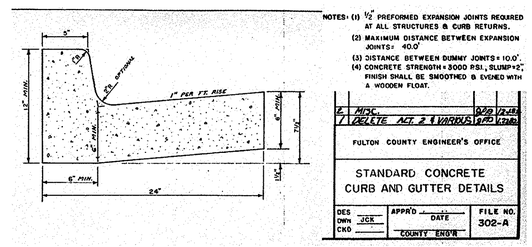

NOTES: (1) 1/2" PREFORMED EXPANSION JOINTS REQUIRED AT ALL STRUCTURES & CURB RETURNS.
(2) MAXIMUM DISTANCE BETWEEN EXPANSION JOINTS = 40.0'
(3) DISTANCE BETWEEN DUMMY JOINTS = 10.0'.
(4) CONCRETE STRENGTH = 3000 PSI, SLUMP = 3", FINISH SHALL BE SMOOTHED & EVENED WITH A WOODEN FLOAT.

6 MISC.		9/29/04
1 DELETE ACT. 2 & VARIOUS		12/14/01

FULTON COUNTY ENGINEER'S OFFICE

STANDARD CONCRETE CURB AND GUTTER DETAILS

DES		APPR'D	DATE	FILE NO.
DWN	JCK			302-A
CKD		COUNTY ENGR		

STANDARD CONCRETE CURB AND GUTTER DETAIL (302-A / CD-04)

SCALE: N.T.S.

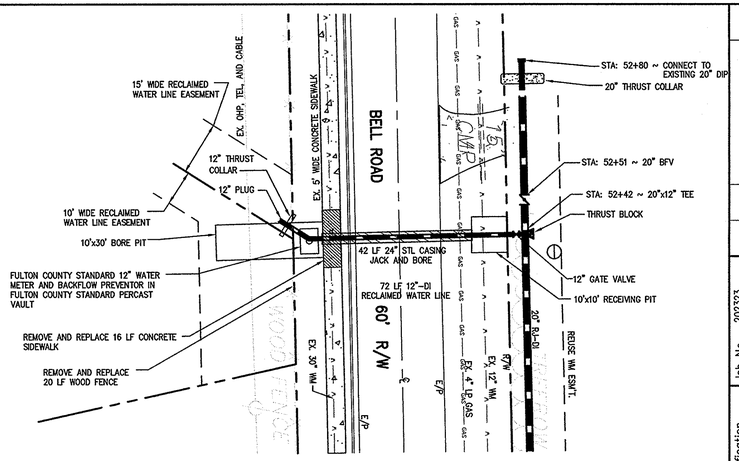

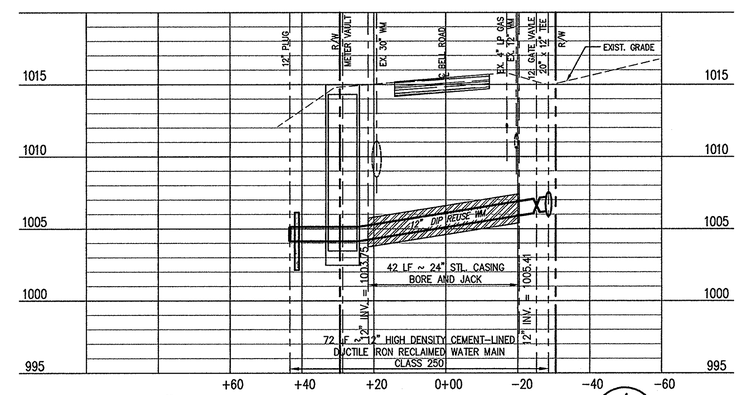

12" PIPE CROSSING AT STATION 52+42 (4 / C-05 | CD-04)

SCALE: HORIZ.: 1" = 20'-0", VERT.: 1" = 10'-0"

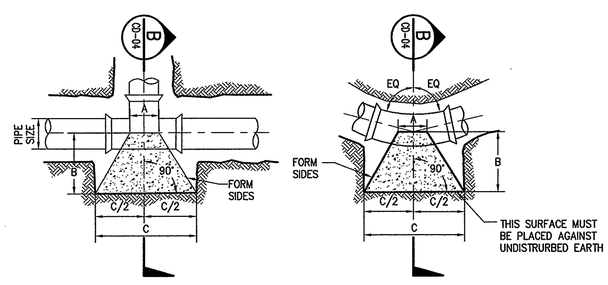

PLAN TEE

SCALE: N.T.S.

PLAN BEND

SCALE: N.T.S.

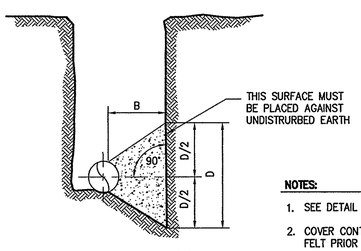

SECTION (B / CD-04)

SCALE: N.T.S.

NOTES:

1. SEE DETAIL 2/CD-01 FOR DIMENSION TABLES
2. COVER CONTACT SURFACE ON JOINT WITH ROOFING FELT PRIOR TO PLACEMENT OF CONCRETE,
3. DO NOT COVER BOLTS ON FITTINGS WITH CONCRETE.

HORIZONTAL THRUST BLOCKING DETAIL (1 / CD-04)

SCALE: N.T.S.

Fitting	Pipe Diam. (in)	THRUST BLOCK DIM. (FT.) A (ft.)	B (ft.)	C (ft.)	D (ft.)	Approx. Volume (C.Y.)	Bearing Area (sq.ft.)	Design Thrust (lbs)
Tee	3	0.5	1.0	2.1	1.1	0.09	2.31	4,616
	4	0.8	1.3	4.0	1.3	0.00	3.39	6,782
	6	1.0	1.6	4.0	1.9	0.30	7.01	14,015
	8	1.2	2.1	6.0	2.5	0.68	12.06	24,110
	10	1.5	2.5	8.0	3.0	1.20	18.13	36,270
	12	1.7	3.0	7.2	3.6	0.98	25.65	51,292
	14	2.0	3.5	8.3	4.2	1.33	34.82	69,633
	16	2.2	4.0	9.4	4.7	1.71	44.56	89,125
	18	2.5	4.5	10.6	5.3	2.16	55.97	111,936
	20	2.7	5.0	11.7	5.9	2.67	68.67	137,344
	24	3.3	5.9	14.0	7.0	3.84	97.97	195,948
	30	4.2	6.3	17.4	8.7	5.93	150.72	301,440
	36	5.0	6.8	20.8	10.4	0.55	215.91	431,816
90°	3	0.5	1.0	2.6	1.3	0.06	3.26	4,352
	4	0.8	1.3	3.1	1.5	0.12	4.80	6,395
	6	1.0	1.6	4.5	2.2	0.31	9.91	13,214
	8	1.2	2.1	5.8	2.9	0.69	17.05	22,731
	10	1.5	2.5	7.2	3.6	1.25	25.65	34,196
	12	1.7	3.0	8.5	4.3	2.11	36.27	48,358
	14	2.0	3.5	9.9	5.0	3.34	49.24	65,650
	16	2.2	4.0	11.2	5.6	4.89	63.02	84,028
	18	2.5	4.5	12.6	6.3	6.91	78.15	105,534
	20	2.7	5.0	13.9	7.0	9.41	97.12	129,489
	24	3.3	5.9	16.6	8.3	15.86	138.56	184,741
	30	4.2	6.3	20.6	10.3	25.95	213.15	284,200
	36	5.0	6.8	24.7	12.4	40.48	305.34	407,120
45° HORIZ. OR VERT. UP	3	0.5	1.0	1.9	0.9	0.04	1.77	2,355
	4	0.8	1.3	2.3	1.1	0.07	2.60	3,461
	6	1.0	1.6	3.3	1.6	0.17	5.36	7,151
	8	1.2	2.1	4.3	2.1	0.39	9.23	12,302
	10	1.5	2.5	5.3	2.6	0.70	13.88	18,507
	12	1.7	3.0	6.3	3.1	1.18	19.63	26,171
	14	2.0	3.5	7.3	3.7	1.88	26.65	35,530
	16	2.2	4.0	8.3	4.1	2.74	34.11	45,476
	18	2.5	4.5	9.3	4.6	3.88	42.84	57,115
	20	2.7	5.0	10.3	5.1	5.28	52.56	70,079
	24	3.3	5.9	12.2	6.1	8.91	74.99	99,981
	30	4.2	6.3	15.2	7.6	14.61	115.36	153,808
	36	5.0	6.8	18.2	9.1	22.78	165.25	220,332

Fitting	Pipe Diam. (in)	THRUST BLOCK DIM. (FT.) A (ft.)	B (ft.)	C (ft.)	D (ft.)	Approx. Volume (C.Y.)	Bearing Area (sq.ft.)	Design Thrust (lbs)
22.5° HORIZ. OR VERT. UP	3	0.5	1.0	1.3	0.7	0.02	0.90	1,201
	4	0.8	1.3	1.6	0.8	0.04	1.32	1,764
	6	1.0	1.6	2.3	1.2	0.10	2.73	3,646
	8	1.2	2.1	3.1	1.5	0.21	4.70	6,272
	10	1.5	2.5	3.8	1.9	0.39	7.08	9,435
	12	1.7	3.0	4.5	2.2	0.65	10.01	13,342
	14	2.0	3.5	5.2	2.6	1.03	13.58	18,113
	16	2.2	4.0	5.9	2.9	1.51	17.39	23,183
	18	2.5	4.5	6.6	3.3	2.13	21.84	29,117
	20	2.7	5.0	7.3	3.7	2.90	26.79	35,726
	24	3.3	5.9	8.7	4.4	4.90	38.23	50,970
	30	4.2	6.3	10.8	5.4	8.04	58.81	78,411
	36	5.0	6.8	13.0	6.5	12.54	84.24	112,324
11.25° HORIZ. OR VERT. UP	3	0.5	1.0	1.0	0.5	0.01	0.45	603
	4	0.8	1.3	1.2	0.6	0.02	0.66	886
	6	1.0	1.6	1.7	0.8	0.06	1.37	1,832
	8	1.2	2.1	2.2	1.1	0.12	2.36	3,151
	10	1.5	2.5	2.7	1.3	0.22	3.56	4,740
	12	1.7	3.0	3.2	1.6	0.37	5.03	6,703
	14	2.0	3.5	3.7	1.8	0.59	6.83	9,100
	16	2.2	4.0	4.2	2.1	0.86	8.74	11,648
	18	2.5	4.5	4.7	2.3	1.23	10.97	14,629
	20	2.7	5.0	5.2	2.6	1.66	13.46	17,949
	24	3.3	5.9	6.2	3.1	2.82	19.21	25,608
	30	4.2	6.3	7.7	3.8	4.65	29.55	39,395
	36	5.0	6.8	9.2	4.6	7.24	42.33	56,434

Thrust Block Notes:
1. The dimensions and values in these tables are based on the following:
   a. Water main test pressure = 250 p.s.i.
   b. Horizontal bearing strength of soil = 2,000 p.s.f.
2. The bearing surface of the thrust block shall be placed against undisturbed soil. If this is not possible, the fill between the bearing surface and undisturbed soil shall be compacted to at least 95% Modified Proctor density.

THRUST BLOCK DIMENSIONS DETAIL (2 / CD-04)

SCALE: N.T.S.

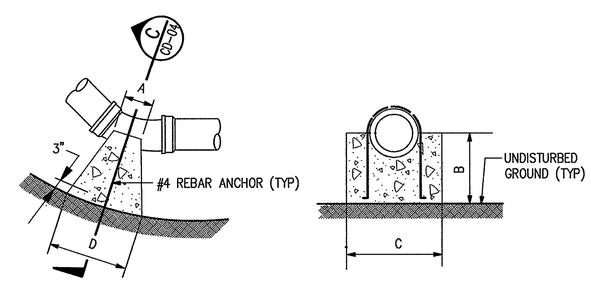

LOWER VERTICAL BENDS

SCALE: N.T.S.

SECTION (C / CD-04)

SCALE: N.T.S.

VERTICAL THRUST BLOCKING DETAIL (3 / CD-04)

SCALE: N.T.S.

Rev	Date	Description	By
0	10/18/04	ISSUED FOR BID	TAC

Job No. 202323
Designed TJG/MWJ
Drawn TJG/MWJ
Checked TJG
Reviewed TAC
Approved TAC
Reg. No. 14589
Date 7/30/04

Issue Certification

REGISTERED ENGINEER — THOMAS A. CORRIGAN — No. 14589 — GEORGIA

FULTON COUNTY DEPARTMENT OF PUBLIC WORKS
141 PRYOR STREET, S.W. ~ SUITE 6001 ~ ATLANTA, GA 30303

PARSONS
5390 Triangle Parkway, Suite 100,
Norcross, GA 30092, (770) 446-4900

BELL ROAD REUSE WATER EXTENSION – PHASE I

CIVIL DETAILS IV

DRAWING NO.
CD-04

EROSION CONTROL NOTES

1. EROSION CONTROL IS TO BE ACCOMPLISHED PRIOR TO ANY CONSTRUCTION ON THE SITE AND MAINTAINED UNTIL PERMANENT GROUND COVER IS ESTABLISHED. THE PROPOSED EROSION AND RUNOFF CONTROL MEASURES ARE IN COMPLIANCE WITH THE COUNTY SEDIMENT CONTROL AND FLOOD PROTECTION REGULATIONS, AND WILL NOT INCREASE THE RUNOFF RATE FROM THE SITE FOR A RAINSTORM WITH A RETURN PERIOD OF 100 YEARS. THE COUNTY WILL INSPECT THE PROJECT PERIODICALLY TO INSURE THE ADEQUACY AND PROPER IMPLEMENTATION OF THESE MEASURES.
2. SILT CONTROL IS TO BE INSTALLED PRIOR TO ALL OTHER WORK AND MAINTAINED FOLLOWING EACH RAIN. SILT CONTROL TO BE RE-LOCATED AS NECESSARY TO CONTAIN SILT DURING CONSTRUCTION.
3. ALL BANKS TO BE STABILIZED IMMEDIATELY AFTER GRADING.
4. PLACE SEDIMENT BARRIERS AT BASE OF ALL FILL SLOPES.
5. ADDITIONAL EROSION CONTROL DEVICES TO BE USED BY CONTRACTOR AS REQUIRED DURING CONSTRUCTION.
6. ALL EXPOSED GROUND CUTS AND FILLS TO BE HYDROSEEDED OR MULCHED IMMEDIATELY AS CONSTRUCTION PERMITS.
7. ALL 3:1 OR GREATER SLOPES MUST BE HYDROSEEDED AND COVERED WITH GEORGIA DOT APPROVED WHEAT OR WOOD MATTING. IF NOT HYDROSEEDED, GEORGIA DOT APPROVED MATTING THAT HAS BEEN INCORPORATED WITH SEED AND FERTILIZER MUST BE USED. ALL SLOPES MUST BE PROPERLY PROTECTED UNTIL A PERMANENT VEGETATIVE STAND IS ESTABLISHED.

NOTE: MAINTENANCE STATEMENT

1. EROSION CONTROL MEASURES WILL BE MAINTAINED AT ALL TIMES. IF FULL IMPLEMENTATION OF THE APPROVED PLAN DOES NOT PROVIDE FOR EFFECTIVE EROSION CONTROL, ADDITIONAL EROSION AND SEDIMENT CONTROL MEASURES SHALL BE IMPLEMENTED TO CONTROL THE TRANSPORT SEDIMENT OFF SITE.
   A. SEDIMENT /EROSION CONTROL DEVICES MUST BE CHECKED AFTER EACH STORM EVENT. EACH DEVICE IS TO BE MAINTAINED OR REPLACED IF SEDIMENT ACCUMULATION HAS REACHED ONE HALF THE CAPACITY OF THE DEVICE.
2. DISTURBED AREAS LEFT IDLE FOR MORE THAN 1 DAY, AND NOT TO FINAL GRADE, WILL BE ESTABLISHED TO TEMPORARY VEGETATION (Ds2). DISTURBED AREAS LEFT IDLE FOR TWO WEEKS OR MORE WILL BE ESTABLISHED TO PERMANENT VEGETATION (Ds3). ALL AREAS TO FINAL GRADE WILL BE ESTABLISHED TO PERMANENT VEGETATION IMMEDIATELY UPON COMPLETION
3. DURING UNSUITABLE GROWING SEASONS, MULCH WILL BE USED AS A TEMPORARY COVER (Ds1). ON SLOPES THAT ARE 2:1 OR STEEPER, MULCH, IF NEEDED, MUST BE ANCHORED.
4. WHEN HAND PLANTING, MULCH (HAY OR STRAW) SHOULD BE UNIFORMLY SPREAD OVER SEEDED AREA WITHIN 24 HOURS OF SEEDING.

TEMPORARY SILT FENCE

1. TYPE A DESCRIPTION: WATER PERMEABLE FILTER FENCE MATERIAL COMPOSED OF STRONG ROT PROOF SYNTHETIC FIBERS FORMED INTO A MATRIX OF WOVEN OR NONWOVEN FABRIC. EITHER TYPE OF FABRIC SHALL BE FREE OF ANY TREATMENT OR COATING WHICH MIGHT SIGNIFICANTLY ALTER IT'S PHYSICAL PROPERTIES AFTER INSTALLATION. THE FABRIC SHALL CONTAIN STABILIZER AND/OR INHIBITORS TO MAKE THE FILAMENTS RESISTANT TO DETERIORATION RESULTING FROM EXPOSURE TO SUNLIGHT OR HEAT. THE FABRIC SHALL BE A PERVIOUS SHEET OF SYNTHETIC FIBERS ORIENTED INTO A NETWORK SO THAT THE FIBERS RETAIN THEIR RELATIVE POSITION WITH RESPECT TO EACH OTHER. EDGES OF THE FABRIC SHALL BE FINISHED TO PREVENT THE OUTER YARN FROM PULLING AWAY FROM THE MATERIAL. THE FABRIC SHALL BE FREE OF DEFECTS OR FLAWS WHICH SIGNIFICANTLY AFFECT THE PHYSICAL AND/OR FILTERING PROPERTIES. THE FABRIC SHALL HAVE A MINIMUM WIDTH OF 36". SHEETS OF FABRIC MAY BE PERMITTED DUE TO THE PRESENCE OF THE SEAM. THE FABRIC MAY BE MANUFACTURED WITH POCKETS FOR POSTS, HEMS WITH CORD OR WITH POSTS PREATTACHED USING STAPLES OR BUTTON HEAD NAILS.
2. TYPE C DESCRIPTION: FILTER FABRIC SHALL BE NON-CALENDERED WOVEN FABRIC CONSTRUCTED WITH MONOFILAMENT YARNS ONLY. FILTER FABRIC SHALL BE A MINIMUM OF 36" WIDE. A WOVEN WIRE SUPPORT FENCE SHALL BE USED WITH TYPE C FENCE. THE WIRE FENCE FABRIC SHALL BE AT LEAST 32 INCHES HIGH AND SHALL HAVE AT LEAST 6 HORIZONTAL WIRES. VERTICAL WIRES SHALL HAVE A MAXIMUM SPACING OF 12 INCHES. THE TOP AND BOTTOM WIRES SHALL BE AT LEAST 10 GAUGE AND ALL OTHER WIRES SHALL BE AT LEAST 12 1/2 GUAGE. THE FILTER FABRIC SHALL BE ATTACHED TO THE TOP OF THE WOVEN WIRE FENCE AT THE MIDPOINT BETWEEN POSTS.
3. MATERIALS:
   A. POSTS
      1. HARDWOOD: 1.5"X5"X48" MINIMUM FOR TYPE A FABRIC. FOR TYPE B FABRIC 1"X1"X36" MINIMUM.
      2. SOFTWOOD: 3" DIAMETER MINIMUM OR NOMINAL 2"X4" AND STRAIGHT ENOUGH TO PROVIDE A FENCE WITHOUT NOTICEABLE MISALIGNMENT FOR TYPE A FABRIC. FOR TYPE B FABRIC, AT LEAST 2" DIA. OR NOM. 2"X2".
      3. STEEL POSTS SHALL BE ROUND, U, T, OR C SHAPED WITH A MINIMUM WEIGHT OF 1.3 POUNDS PER FOOT AND HAVE PROJECTIONS FOR FASTENING THE WIRE TO THE FENCE FOR TYPE A FABRIC. FOR TYPE B FABRIC POSTS SHALL HAVE A MINIMUM WEIGHT OF 0.75 POUNDS PER FOOT AND ROUND POSTS SHALL BE A MINIMUM OF 1' IN DIAMETER.
   B. SPACING: SIX FOOT CENTERS MAXIMUM.
   C. FABRIC: GEORGIA DOT QUALIFIED PRODUCTS LIST=36 ONLY.
   D. FASTENERS: WIRE STAPLES WILL BE A NO. 17 GAGE MINIMUM AND SHALL HAVE A CROWN AT LEAST 3/4 INCH WIDE AND LEGS AT LEAST 1/2 INCH LONG. STAPLES SHALL BE EVENLY SPACED WITH AT LEAST 5 PER POST. NAILS SHALL BE 14 GAGE, MINIMUM, ONE INCH LONG WITH 3/4 INCH BUTTON HEADS. NAILS SHALL BE EVENLY SPACED WITH AT LEAST 4 PER POST.
      4. INSTALLATION: TEMPORARY SILT FENCE INSTALLATION SHALL CONFORM TO THE STANDARDS SET FORTH IN THE MANUAL FOR EROSION AND SEDIMENT CONTROL IN GEORGIA.
      5. MAINTENANCE: THE DEVELOPER/CONTRACTOR SHALL MAINTAIN THE SILT FENCE UNTIL THE LDA IS COMPLETE AND FINAL STABILIZATION IS ACHIEVED. FILTER FABRIC SHALL BE REMOVED AND REPLACED WHENEVER IT HAS DETERIORATED OR BEEN OTHERWISE DAMAGED TO SUCH EXTENT THAT IT REDUCES THE EFFECTIVENESS OF THE SILT FENCE.
4. INSTALLATION OF FABRIC FENCE MATERIAL IN AREAS OF CONCENTRATED FLOW IS NOT RECOMMENDED UNLESS PROPER PROVISIONS ARE MADE TO SUPPLEMENT OR OTHERWISE STRENGTHEN THE FENCE TO WITHSTAND INCREASED DRAINAGE WATER VELOCITIES. VENDOR MUST SUPPLY LETTER OF WARRANTY FOR AFOREMENTIONED SPECIFICATIONS. IN ADDITION, THIS LETTER SHOULD STATE THAT THE FABRIC IS ON THE GEORGIA QPL=36.

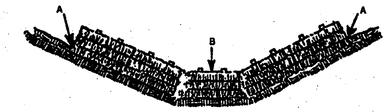

Points A should be higher than point B

PROPER PLACEMENT OF STRAW BALE BARRIER IN DRAINAGE WAY

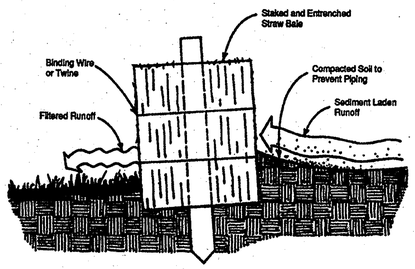

Note: Embed hay bales a minimum of 4 inches.

CROSS-SECTION OF A PROPERLY INSTALLED STRAW BALE

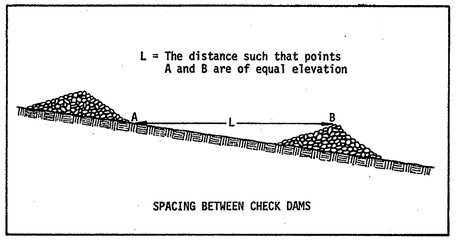

Figure 6-1.1

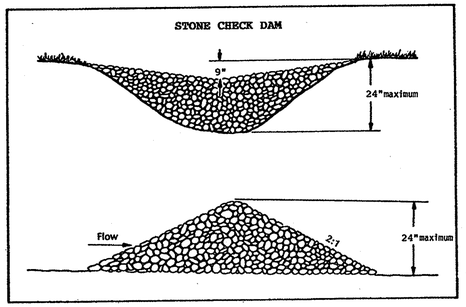

Figure 6-1.2

CHECK DAM

NOT TO SCALE

Cd
CD-05

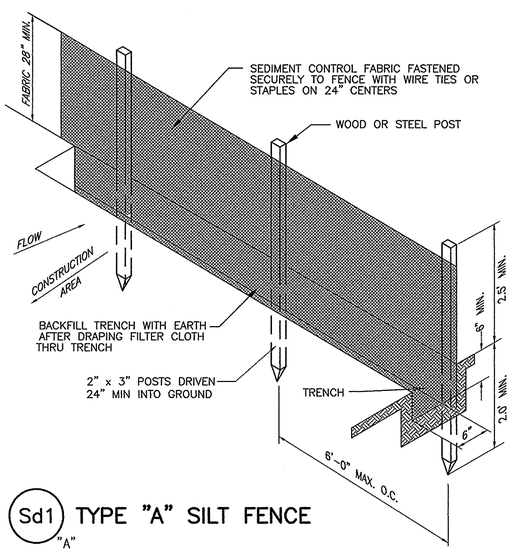

Sd1 "A" TYPE "A" SILT FENCE

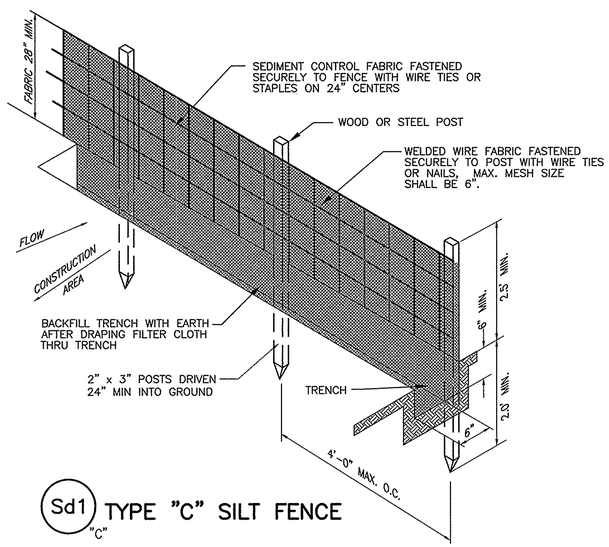

Sd1 "C" TYPE "C" SILT FENCE

NOTES:

1. SEDIMENT CONTROL FABRIC SHALL BE MIRAFI 100X OR APPROVED EQUAL.
2. USE TYPE "A" SILT FENCE ON CONSTRUCTION PROJECTS WHERE THE LIFE OF THE PROJECT IS GREATER THAN SIX MONTHS OR WHERE THE SLOPE GRADIENT IS STEEPER THAN 3:1.
3. USE TYPE "C" WIRE-REINFORCED SILT FENCE WHERE FILL SPOPES EXCEED A VERTICAL HEIGHT OF 20 FEET AND THE SLOPE GRADIENT IS STEEPER THAN 3:1.
4. INSPECT BARRIERS AT THE END OF EACH WORKING DAY, OR AFTER EACH RAIN, AND REPAIR OR CLEAN AS NECESSARY.
5. REMOVE SEDIMENT FROM BARRIER WHEN TWO-THIRDS FULL.
6. DEPOSE OF SEDIMENT SO THAT IT WILL NOT ENTER BARRIER AGAIN AND STABILIZE IT WITH VEGETATION.
7. REPLACE FILTER FABRIC WHEN DETERIORATED. DESIGN LIFE OF A SYNTHETIC SILT FENCE IS APPROXIMATELY 6 MONTHS.
8. MAINTAIN UNTIL THE PROJECT IS VEGETATED OR OTHERWISE STABILIZED.
9. REMOVE BARRIERS AND ACCUMULATED SEDIMENT AND STABILIZE THE EXPOSED AREA WHEN THE PROJECT IS STABILIZED.

SEDIMENT BARRIER

SCALE: N.T.S.

Sd1
CD-05

Rev	Date	Description	By
0	10/6/06	ISSUED FOR BID	TAC

Job No. 202323
Designed TJG/AWM
Drawn TJG/AWM
Checked TJG
Reviewed TAC
Approved TAC
Reg. No.
Date 7/30/04

Issue Certification

GEORGIA REGISTERED No. 23390 PROFESSIONAL ENGINEER THOMAS A. CHEEK

FULTON COUNTY DEPARTMENT OF PUBLIC WORKS
141 PRYOR STREET, S.W. ~ SUITE 6001 ~ ATLANTA, GA 30303

PARSONS
5390 Triangle Parkway, Suite 100,
Norcross, GA 30092, (770) 446-4900

BELL ROAD REUSE WATER EXTENSION - PHASE I

EROSION CONTROL DETAILS I

DRAWING NO.
CD-05

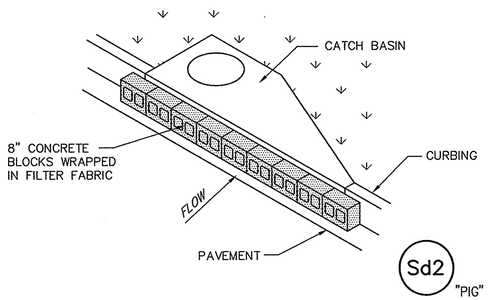

NOTES:

1. WRAP 8" CONCRETE BLOCKS IN FILTER FABRIC AND SPAN ACROSS CATCH BASIN INLET
2. FACE OPENINGS IN BLOCKS OUTWARD.
3. INSPECT, CLEAR, AND/OR REPAIR TRAP AT THE END OF EACH WORKING DAY.
4. DO NOT REMOVE INLET PROTECTION AND WASH SEDIMENT INTO STORM DRAIN.

INLET SEDIMENT TRAP DETAIL (PIGS IN A BLANKET)

SCALE: N.T.S.

Sd2 CD-06

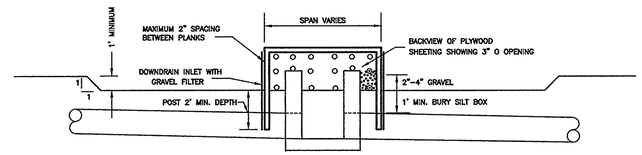

PROFILE
NO SCALE

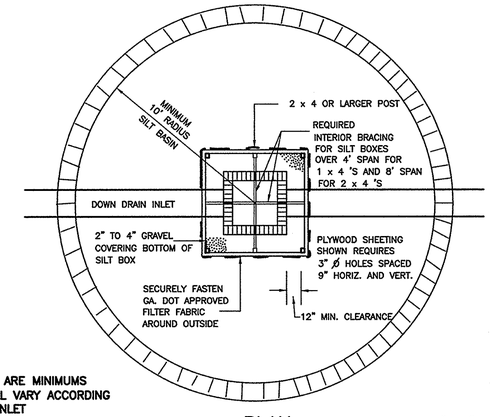

DIMENSIONS SHOWN ARE MINIMUMS
ACTUAL SIZE OF BOX WILL VARY ACCORDING TO SIZE OF INLET

PLAN
NOT TO SCALE

TEMPORARY SEDIMENT TRAP DETAIL (SILT BOX)

Sd2 "BOX" CD-06

MULCHING APPLICATION REQUIREMENTS

MATERIAL	RATE	DEPTH
STRAW OR HAY	2 1/2 TON/ACRE	6" TO 10"
WOOD WASTE, CHIPS, SAWDUST, BARK	6 TO 9 TON/ACRE	2" TO 3"
CUTBACK ASPHALT	1200 GAL./ACRE OR 1/4 GAL./SQ. YD.	———
POLYETHYLENE FILM	SECURE WITH SOIL, ANCHORS, WEIGHTS	———
CUTBACK ASPHALT	SEE MANUFACTURER'S RECOMMENDATIONS	———
GEOTEXTILES, JUTE MATTING, NETTING, ETC.	SEE MANUFACTURER'S RECOMMENDATIONS	———

Ds1

NOTES:

1. TO BE USED AS A TEMPORARY COVER FOR A PERIOD OF SIX (6) MONTHS OR LESS WHEN SEEDING IS NOT PRACTICAL.
2. INSTALL ALL OTHER REQUIRED BMPs FIRST.
3. GRADE SITE, IF POSSIBLE, TO PERMIT THE USE OF EQUIPMENT FOR APPLYING AND ANCHORING MULCH.
4. LOOSEN COMPACTED SOIL, IF POSSIBLE, TO A DEPTH OF THREE (3) INCHES.
5. APPLY STRAW OR HAY UNIFORMLY AT THE RATE AND DEPTH SPECIFIED, BY HAND, AND ANCHOR BY PRESSING INTO SOIL OR USE NETTING.
6. MULCH ON SLOPES GREATER THAN 3% SHOULD BE ANCHORED WITH EMULSIFIED ASPHALT (GRADE AE-5 OR SS-1) OR OTHER SUITABLE TACKIFIER.
7. WOOD WASTE ON SLOPES FLATTER THAN 3:1 DO NOT NEED ANCHORING.
8. IF ORGANIC MULCH IS TO BE LEFT AND INCORPORATED INTO THE SOIL, APPLY 20-30 POUNDS OF NITROGEN PER ACRE IN ADDITION TO THE FERTILIZER REQUIRED FOR VEGETATION.

DISTURBED AREA STABILIZATION (WITH MULCHING ONLY)

SCALE: N.T.S.

Ds1 CD-06

LANDSCAPE SEED

THE SEED MIX TO BE USED IS THE SOUTHEASTERN WILDFLOWER MIX FROM THE 1997 WILDFLOWER REFERENCE GUIDE & SEED CATALOG BY WILDSEED FARMS.

SCHEDULE NO.	COMMON NAME OF SEED	RURAL RATE	URBAN RATE	PLANTING DATES
(1)	COMMON BURMUDA (HULLED)	25	25	MARCH 15-AUG 14
	SERICEA LESPEDEZA (SCARIFIED)	57	57	
	WEEPING LOVE GRASS	12	12	
	KENTUCKY 31 FESCUE	57	67	
(2)	KENTUCKY 31 FESCUE	57	89	AUG 15-MARCH 14
	SERICEA LESPEDEZA (UNHULLED, UNSCARIFIED)	89	89	
	WEEPING LOVE GRASS	12	12	
	RESEEED CRIMSON CLOVER	22	0	
	RYE GRAIN	22	0	

LANDSCAPE SEED NOTES:

1. THE TOTAL KILOGRAMS OF SEED PER HECTARE SHALL BE THE SUM TO ATL SHOWN FOR ALL THE VARIETIES OF SEED OPPOSITE THE SCHEDULE NUMBER IN THE SEEDING SCHEDULES BELOW.
2. INCLUDES RURAL AREAS ADJACENT TO WELL-DEVELOPED LAWNS.
3. GIANT BERNUDA SEED, INCLUDING NK-37, SHALL NOT BE USED.
4. RESEEDING CRIMSON CLOVER SHALL BE INOCULATED.

NOTE:

JANUARY AND FEBRUARY ARE "HIGH FAILURE" MONTHS FOR PLANTING. TEMPORARY MULCH IS RECOMMENDED FOR THIS PERIOD WITH PLANTING TO COME LATER. TEMPORARY PLANTINGS MAY PROVIDE SOME COVER DURING THESE TIMES IF NO OTHER OPTION EXIST.

Ds2 Ds3

FERTILIZER REQUIREMENTS

TYPE OF SPECIES	PLANTING YEAR 1,000 sq. ft.	FERTILIZER (N-P-K)	RATE (lbs./acre)	N TOP DRESSING RATE (lbs./acre)
COOL SEASON GRASSES	FIRST SECOND MAINTENANCE	6-12-12 6-12-12 10-10-10	1500 1000 400	50-100 --- 30
COOL SEASON GRASSES & LEGUMES	FIRST SECOND MAINTENANCE	6-12-12 0-10-10 0-10-10	1500 1000 400	0-50 --- ---
TEMPORARY COVER CROPS SEEDED ALONE	FIRST	10-10-10	500	30
WARM SEASON GRASSES	FIRST SECOND MAINTENANCE	6-12-12 6-12-12 10-10-10	1500 800 400	50-100 50-100 30
WARM SEASON GRASSES & LEGUMES	FIRST SECOND MAINTENANCE	6-12-12 0-10-10 0-10-10	1500 1000 400	50 --- ---

NOTES FOR TEMPORARY SEEDING

1. INSTALL ALL EROSION CONTROL MEASURES PRIOR TO APPLYING TEMPORARY VEGETATION.
2. GRADING OR SHAPING ARE NOT REQUIRED IF SLOPES CAN BE PLANTED WITH A HYDROSEEDER OR BY HAND-SEEDING.
3. SEEDBED PREPARATION IS NOT REQUIRED IF SOIL IS LOOSE AND NOT SEALED BY RAIN.
4. WHEN THE SOIL IS SEALED OR CRUSTED, IT SHALL BE PITTED, TRENCHED OR SCARIFIED TO PROVIDE A PLACE FOR SEED TO LODGE AND GERMINATE.
5. AGRICULTURAL LIME IS NOT REQUIRED.
6. FERTILIZER IS NOT REQUIRED ON FAIRLY FERTILE SOILS.
7. FERTILIZE LOW FERTILITY SOILS BY ADDING AND MIXING INTO SOIL PRIOR TO PLANTING AT THE RATE OF 500-700 POUNDS PER ACRE OF 10-10-10 FERTILIZER OR EQUIVALENT (12-16 POUNDS/1000 SQUARE FEET).
8. APPLY SEED BY HAND, CYCLONE SEEDER, DRILL OR HYDRO-SEEDER. SEED PLANTED WITH A DRILL SHOULD BE PLANTED 1/2"-1" DEEP.

NOTES FOR PERMANENT SEEDING

1. INSTALL ALL EROSION CONTROL MEASURES PRIOR TO APPLYING TEMPORARY VEGETATION.
2. SCARIFY, PIT OR TRENCH SEALED OR CRUSTED SOIL.
3. FERTILIZE BASED ON SOIL TESTS OR AS SHOWN IN TABLE ABOVE.
4. APPLY AGRICULTURAL LINE AS PRESCRIBED BY SOIL TEST OR AT A RATE OF 1 TO 2 TONS PER ACRE.
5. APPLY SEED BY HAND, CYCLONE SEEDER, DRILL OR HYDRO-SEEDER. SEED PLANTED WITH A DRILL SHOULD BE PLANTED 1/2"-1" DEEP.
6. IRRIGATION SHOULD BE USED TO SUPPLEMENT RAINFALL, BUT NOT TO THE EXTENT TO CAUSE EROSION.
7. RE-SEED AREAS WHERE AN ADEQUATE STAND OF VEGETATION FAILS TO EMERGE OR WHERE A POOR STAND EXISTS.

DISTURBED AREA STABILIZATION (WITH TEMPORARY AND PERMANENT SEEDING)

SCALE: N.T.S.

Ds2 CD-06 Ds3 CD-06

Rev	Date	Description	By
0	10/16/06	ISSUED FOR BID	TAC

Job No. 202323
Designed TJG/AWU
Drawn TJG/AWU
Checked TJG
Reviewed TAC
Approved TAC
Reg. No.
Date 7/30/04

Issue Certification

GEORGIA REGISTERED PROFESSIONAL ENGINEER THOMAS A. COBB 11/08/06

FULTON COUNTY DEPARTMENT OF PUBLIC WORKS
141 PRYOR STREET, S.W. ~ SUITE 6001 ~ ATLANTA, GA 30303

PARSONS
5390 Triangle Parkway, Suite 100,
Norcross, GA 30092, (770) 446-4900

BELL ROAD REUSE WATER EXTENSION - PHASE I

EROSION CONTROL DETAILS II

DRAWING NO.
CD-06

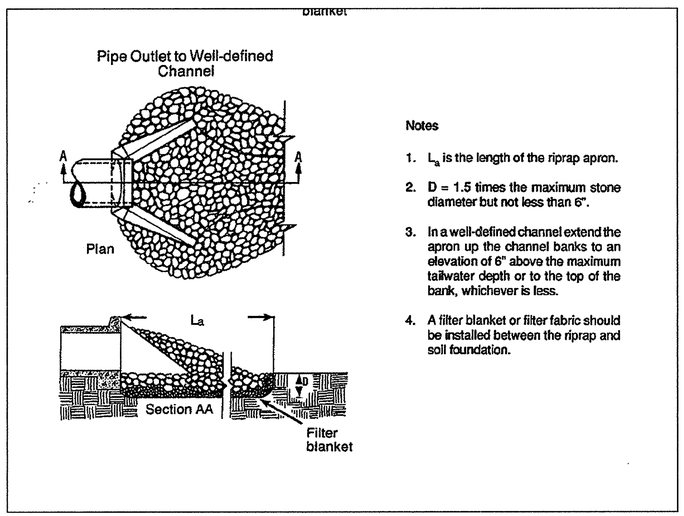

Notes

1. L_a is the length of the riprap apron.
2. D = 1.5 times the maximum stone diameter but not less than 6".
3. In a well-defined channel extend the apron up the channel banks to an elevation of 6" above the maximum tailwater depth or to the top of the bank, whichever is less.
4. A filter blanket or filter fabric should be installed between the riprap and soil foundation.

St1 STORM OUTLET PROTECTION DETAIL

NOT TO SCALE

St1 / CD-07

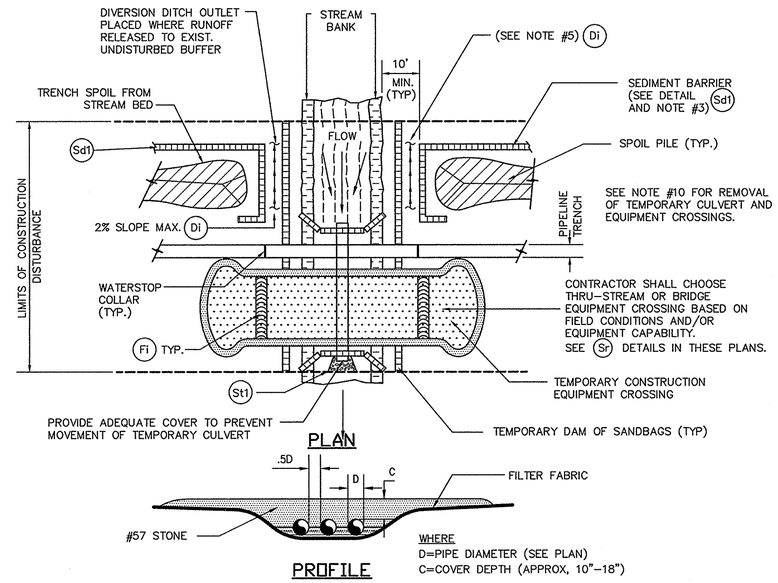

SIZE CULVERT PER TABLE

NOTES:

1. TEMPORARY DAMS AND CULVERTS SHALL BE IN PLACE PRIOR TO ANY TRENCHING ACTIVITY.
2. CULVERT PIPE(S) SHALL BE SIZED AS IN TABLE. USE AS MANY CULVERTS AS REQUIRED TO SPAN STREAM BED WITH PIPES SPACED ONE-HALF (1/2) THEIR DIAMETER APART.
3. SEDIMENT BARRIERS SHALL BE INSTALLED ALONG EITHER SIDE OF STREAM TO INTERCEPT SURFACE RUNOFF.
4. SEDIMENT BARRIERS SHALL BE PLACED AROUND SPOIL PILE.
5. INSTALL PERMANENT DIVERSION TERRACES, DETAIL (Di), AT THE BASE OF ALL SLOPES ADJACENT TO THE STREAM.
6. STAGING AREA FOR STREAM CROSSING SHALL BE LOCATED AT LEAST 50 FEET FROM STREAMBANK (WHERE TOPOGRAPHIC CONDITIONS PERMIT) AND SHALL BE OF A MINIMUM SIZE NEEDED FOR CONVENIENT PREPARATION.
7. CHEMICALS, FUELS AND LUBRICATING OILS SHALL NOT BE STORED AND EQUIPMENT SHALL NOT BE REFUELED WITHIN 100 FEET OF THE STREAMBANK.
8. CONTRACTOR SHALL POSTPONE GRADING OF RIGHT-OF-WAY IN STREAMBANK ZONE UNTIL STAGING AREA IS PREPARED AND IN-STREAM WORK IS READY TO COMMENCE.
9. CONTRACTOR SHALL COMPLETE IN-STREAM CONSTRUCTION WITHIN 24 HOURS AFTER COMPLETION OF CROSSING, CAREFULLY REMOVE ALL TEMPORARY CULVERTS, BRIDGES AND EQUIPMENT CROSSING AND STABILIZE CHANNEL IN ACCORDANCE WITH APPROPRIATE CREEK CROSSING DETAIL.

TEMPORARY CULVERT DIAMETER TABLE

DRAINAGE AREA (ACRES)				PIPE SIZE (INCHES)		
MOUNTAINOUS	HILLY LAND	ROLLING LAND	FLAT LAND	STANDARD ROUND	PIPE ARCH SPAN	PIPE ARCH RISE
0–1.4	0–2.25	0–4.2	0–9.3	12	18	11
1.4–2.6	2.25–4.2	4.2–7.5	9.3–16.5	15	22	13
2.6–4.1	4.2–6.7	7.5–12	16.5–27	18	25	16
4.1–6.2	6.7–10	12–18	27–40	21	29	18
6.2–8.8	10–14	18–25	40–57	24	36	22
8.8–16	14–26	25–46	57–104	30	43	27
16–16	26–41	46–75	104–165	36	50	31
16–39	41–62	75–112	165–250	42	58	36
39–56	62–88	112–160	250–350	48	65	40
56–76	88–120	160–220	350–480	54	72	44
76–100	120–160	220–290	480–640	60	79	49
100–127	160–205	290–370	---	72	85	54
127–160	205–260	370–430	---	75	–	–
160–180	260–290	430–520	---	78	–	–
180–240	290–400	520–640	---	84	–	–

STREAM CROSSING TEMPORARY EROSION CONTROL MEASURE

Sr N.T.S.

(APPLIES TO STREAMS ≤ 10' WIDE AND < 2' AVERAGE DEPTH)

Sr / CD-07

NOTE

Rip-Rap Entire Length of Creek Crossing Including Both Banks of Creek for a Width as Directed By The Engineer.

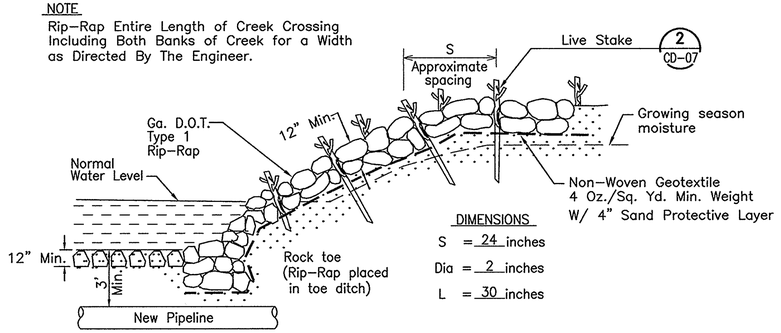

DIMENSIONS

S = 24 inches

Dia = 2 inches

L = 30 inches

Sb TYPICAL STREAM CROSSING RESTORATION

NOT TO SCALE

1 / CD-07

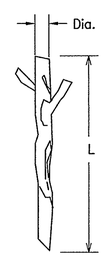

NOTE: Protect live stakes from damage during installation.

(a) Use pry bar to make opening in rock.

OR

(b) Use tubing to provide opening.

LIVE STAKE DETAIL

NOT TO SCALE

2 / CD-07

Rev	Date	Description	By
0	10/16/06	ISSUED FOR BID	TAC

Job No. 202323
Designed TJG/AWW
Drawn TJG/AWW
Checked TJG
Reviewed TAC
Approved TAC
Reg. No.
Date 7/30/04

Issue Certification

FULTON COUNTY DEPARTMENT OF PUBLIC WORKS
141 PRYOR STREET, S.W. ~ SUITE 6001 ~ ATLANTA, GA 30303

PARSONS
5390 Triangle Parkway, Suite 100,
Norcross, GA 30092, (770) 446-4900

BELL ROAD REUSE WATER EXTENSION - PHASE I

EROSION CONTROL DETAILS III

DRAWING NO.
CD-07

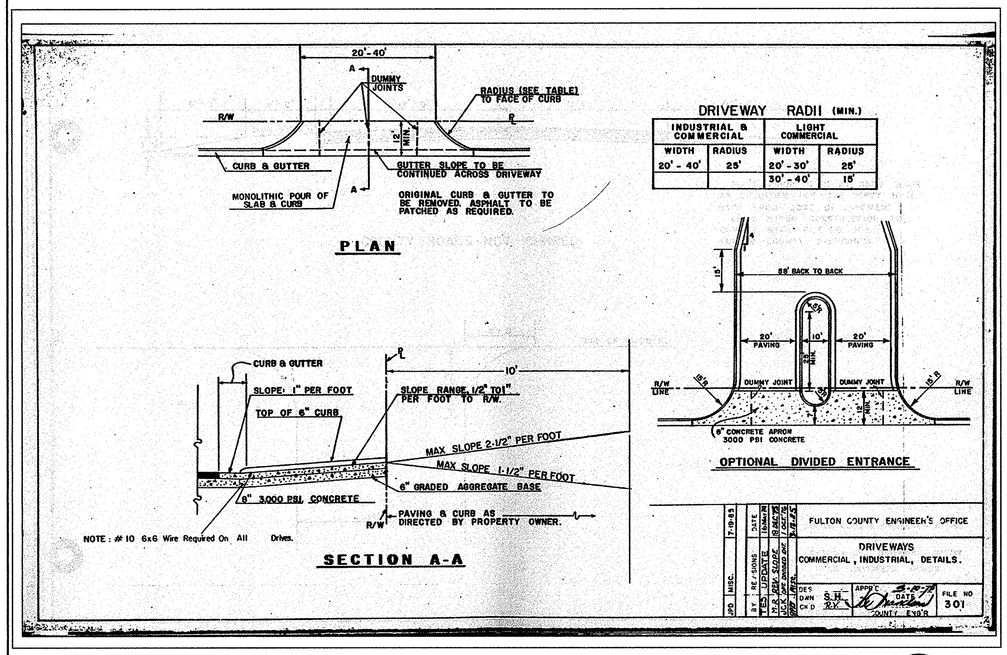

FULTON COUNTY DETAIL 301
NOT TO SCALE
301 / CD-08

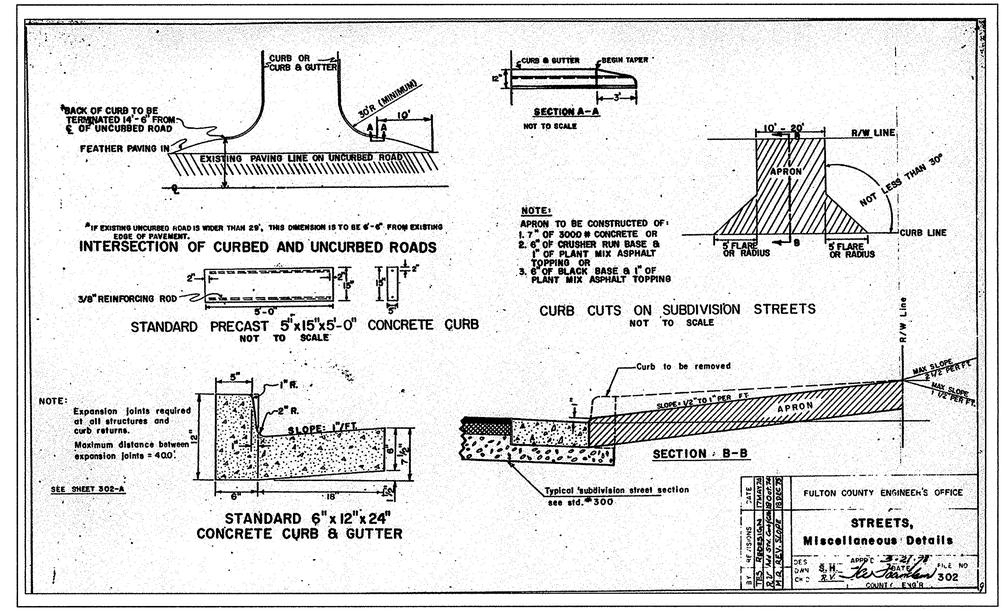

FULTON COUNTY DETAIL 302
NOT TO SCALE
302 / CD-08

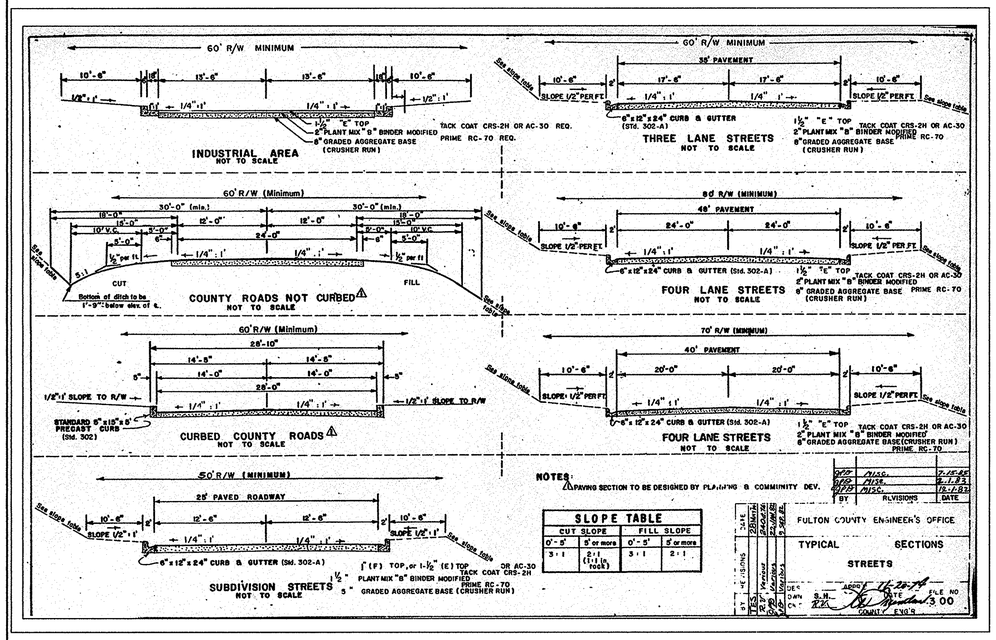

FULTON COUNTY DETAIL 300
NOT TO SCALE
300 / CD-08

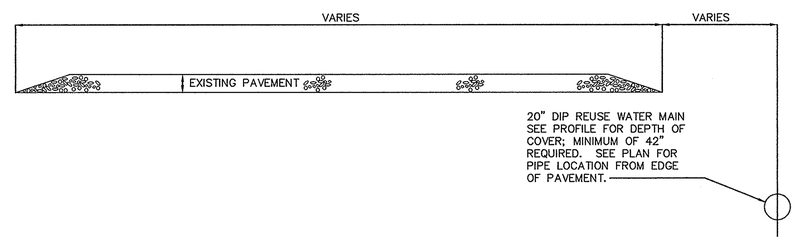

TYPICAL REUSE WATER PIPE LOCATION
NOT TO SCALE
1 / CD-08

Rev	Date	Description	By
0	10/16/06	ISSUED FOR BID	TAC

Job No. 202323
Designed TJG/MWJ
Drawn TJG/MWJ
Checked TJG
Reviewed TAC
Approved TAC
Reg. No.
Date 7/30/04

Issue Certification

GEORGIA REGISTERED PROFESSIONAL ENGINEER No. 14936 MICHAEL W. JOHNSON

FULTON COUNTY DEPARTMENT OF PUBLIC WORKS
141 PRYOR STREET, S.W. ~ SUITE 6001 ~ ATLANTA, GA 30303

PARSONS
5390 Triangle Parkway, Suite 100,
Norcross, GA 30092, (770) 446-4900

BELL ROAD REUSE WATER EXTENSION - PHASE I

CIVIL DETAILS V

DRAWING NO.
CD-08