| PANEL NAME: LC | | | LOCATION: ELECTRICAL ROOM | | VOLTAGE: | 208 | VOLT | 3 PHASE | | | MOUNTING / ENCLOSURE: SURFACE / NEMA 1 | | | |
|---|---|---|---|---|---|---|---|---|---|---|---|---|---|---|
| | | | | | MAIN C/B: | 100 | AMPS | 4 WIRE | | | | | | |
| | | | | | BUS RATING: | 100 | AMPS | | | | SHORT CIRCUIT RATING: 22,000 AIC | | | |
| AMPS | POLES | TYPE | CIRCUIT DESCRIPTION | KVA | CKT | A | B | C | CKT | KVA | CIRCUIT DESCRIPTION | TYPE | POLES | AMPS |
| 20 | 1 | | DRYWELL No.1 VENTILATION ALARM LCP "VCP-1" | 0.50 | 1 | 0.50 | | | 2 | | SPACE | | | |
| 20 | 1 | | DRYWELL No.2 VENTILATION ALARM LCP "VCP-2" | 0.50 | 3 | | 0.50 | | 4 | | SPACE | | | |
| 20 | 1 | | FIRE ALARM CONTROL PANEL | 1.00 | 5 | | | 1.00 | 6 | | SPACE | | | |
| 20 | 1 | | SECURITY ALARM CONTROL PANEL | 1.00 | 7 | 1.00 | | | 8 | | SPACE | | | |
| 20 | 1 | | CHEMICAL TANK FILL LCP | 1.00 | 9 | | 1.00 | | 10 | | SPACE | | | |
| 20 | 1 | | CP-RRPS | 1.50 | 11 | | | 1.50 | 12 | | SPACE | | | |
| 20 | 1 | | SODIUM HYPO. LEVEL TRANSMITTER | 0.10 | 13 | 0.10 | | | 14 | | SPACE | | | |
| 20 | 1 | | SODIUM HYD. LEVEL TRANSMITTER | 0.10 | 15 | | 0.10 | | 16 | | SPACE | | | |
| 20 | 1 | | ODOR SCRUB. CTRL EYE WASH HEAT TRACE | 1.00 | 17 | | | 1.00 | 18 | | SPACE | | | |
| 20 | 1 | | CHEMICAL TANK EYE WASH HEAT TRACE | 1.00 | 19 | 1.00 | | | 20 | | SPACE | | | |
| 20 | 1 | | INFLUENT MANHOLE No.1 RECEPT. | 0.40 | 21 | | 0.40 | | 22 | | SPACE | | | |
| 20 | 1 | 2 | SPARE | 0.10 | 23 | | | | 24 | | SPACE | | | |
| 20 | 1 | | SPARE | 0.10 | 25 | | | | 26 | | SPACE | | | |
| 20 | 1 | | ODOR CONTROL CARBON SYSTEM PANEL | 1.50 | 27 | | 1.50 | | 28 | | SPACE | | | |
| 20 | 1 | | SERVICE RECEPTACLES ROOF TOP UNITS | 0.40 | 29 | | | 0.40 | 30 | | SPACE | | | |
| 20 | 1 | | LIT-151 | 0.10 | 31 | 0.10 | | | 32 | | SPACE | | | |
| 20 | 1 | | LIT-152 | 0.10 | 33 | | 0.10 | | 34 | | SPACE | | | |
| 20 | 1 | | SPARE | | 35 | | | | 36 | | SPACE | | | |
| 20 | 1 | | SPARE | | 37 | | | | 38 | | SPACE | | | |
| 20 | 1 | | SPARE | | 39 | | | | 40 | | SPACE | | | |
| 20 | 1 | | SPARE | | 41 | | | | 42 | | SPACE | | | |
| | | | | | PHASE TOTAL | 2.7 | 3.6 | 3.9 | KVA | | | | | |
| | | | | | | | | | | | TOTAL CONNECTED LOAD | 10 | KVA | 28 A |

| PANEL NAME: HC | | | LOCATION: ELECTRICAL ROOM | | VOLTAGE: | 480 | VOLT | 3 PHASE | | | MOUNTING / ENCLOSURE: SURFACE / NEMA 1 | | | |
|---|---|---|---|---|---|---|---|---|---|---|---|---|---|---|
| | | | | | MAIN C/B: | 225 | AMPS | | | | | | | |
| | | | | | BUS RATING: | 225 | AMPS | | | | SHORT CIRCUIT RATING: 22,000 AIC | | | |
| AMPS | POLES | TYPE | CIRCUIT DESCRIPTION | KVA | CKT | A | B | C | CKT | KVA | CIRCUIT DESCRIPTION | TYPE | POLES | AMPS |
| 20 | 3 | M | INFLUENT PUMP INF-P-1A ISOL. VALVE | 1.66 | 1 | 3.32 | | | 2 | 1.66 | INFLUENT PUMP INF-P-2A ISOL. VALVE | M | 3 | 20 |
| | | M | MOV-221 2 | 1.66 | 3 | | 3.32 | | 4 | 1.66 | MOV-224 2 | M | | |
| | | M | | 1.66 | 5 | | | 3.32 | 6 | 1.66 | | M | | |
| 20 | 3 | M | INFLUENT PUMP INF-P-1B SOL. VALVE | 1.66 | 7 | 3.32 | | | 8 | 1.66 | INFLUENT PUMP INF-P-2A ISOL. VALVE | M | 3 | 20 |
| | | M | MOV-222 2 | 1.66 | 9 | | 3.32 | | 10 | 1.66 | MOV-225 2 | M | | |
| | | M | | 1.66 | 11 | | | 3.32 | 12 | 1.66 | | M | | |
| 20 | 3 | M | INFLUENT PUMP INF-P-1C SOL. VALVE | 1.66 | 13 | 3.32 | | | 14 | 1.66 | INFLUENT PUMP INF-P-2A ISOL. VALVE | M | 3 | 20 |
| | | M | MOV-223 2 | 1.66 | 15 | | 3.32 | | 16 | 1.66 | MOV-226 2 | M | | |
| | | M | | 1.66 | 17 | | | 3.32 | 18 | 1.66 | | M | | |
| 20 | 3 | M | GATE CONTROLLER | 1.00 | 19 | 2.60 | | | 20 | 1.60 | SLUICE GATE OPERATOR SLG-111 2 | M | 3 | 20 |
| | | M | | 1.00 | 21 | | 2.60 | | 22 | 1.60 | | M | | |
| | | M | | 1.00 | 23 | | | 2.60 | 24 | 1.60 | | M | | |
| 20 | 1 | L | EXTERIOR LIGHTS | 2.00 | 25 | 3.60 | | | 26 | 1.60 | SLUICE GATE OPERATOR SLG-112 2 | M | 3 | 20 |
| 20 | 1 | | SPARE | | 27 | | 1.60 | | 28 | 1.60 | | M | | |
| 20 | 1 | | SPARE | | 29 | | | 1.60 | 30 | 1.60 | | M | | |
| 20 | 3 | | SPARE | | 31 | 10.00 | | | 32 | 10.00 | TRANSFORMER TC | M | 3 | 20 |
| | | | | | 33 | | 10.00 | | 34 | 10.00 | | M | | |
| | | | | | 35 | | | 10.00 | 36 | 10.00 | | M | | |
| 20 | 3 | | SPARE | | 37 | | | | 38 | | SPARE | | 3 | 20 |
| | | | | | 39 | | | | 40 | | | | | |
| | | | | | 41 | | | | 42 | | | | | |
| | | | | | PHASE TOTAL | 26.2 | 24.2 | 24.2 | KVA | | | | | |
| | | | | | | | | | | | TOTAL CONNECTED LOAD | 74 | KVA | 90 A |

REFER TO CONTRACT DRAWING NUMBER
E17

SHEET 1 OF 1

H & S JOB NUMBER
30039

CONTRACT NUMBER
.

# Electrical
# Miscellaneous Schedules

RIVERSIDE ROAD PUMP STATION
UPGRADES
575 RIVERSIDE ROAD, ROSWELL GA. 30075

DATE
01-07-08

BY
H & S

ADDENDUM NO.
4

ATTACHMENT NO.
ESK-11

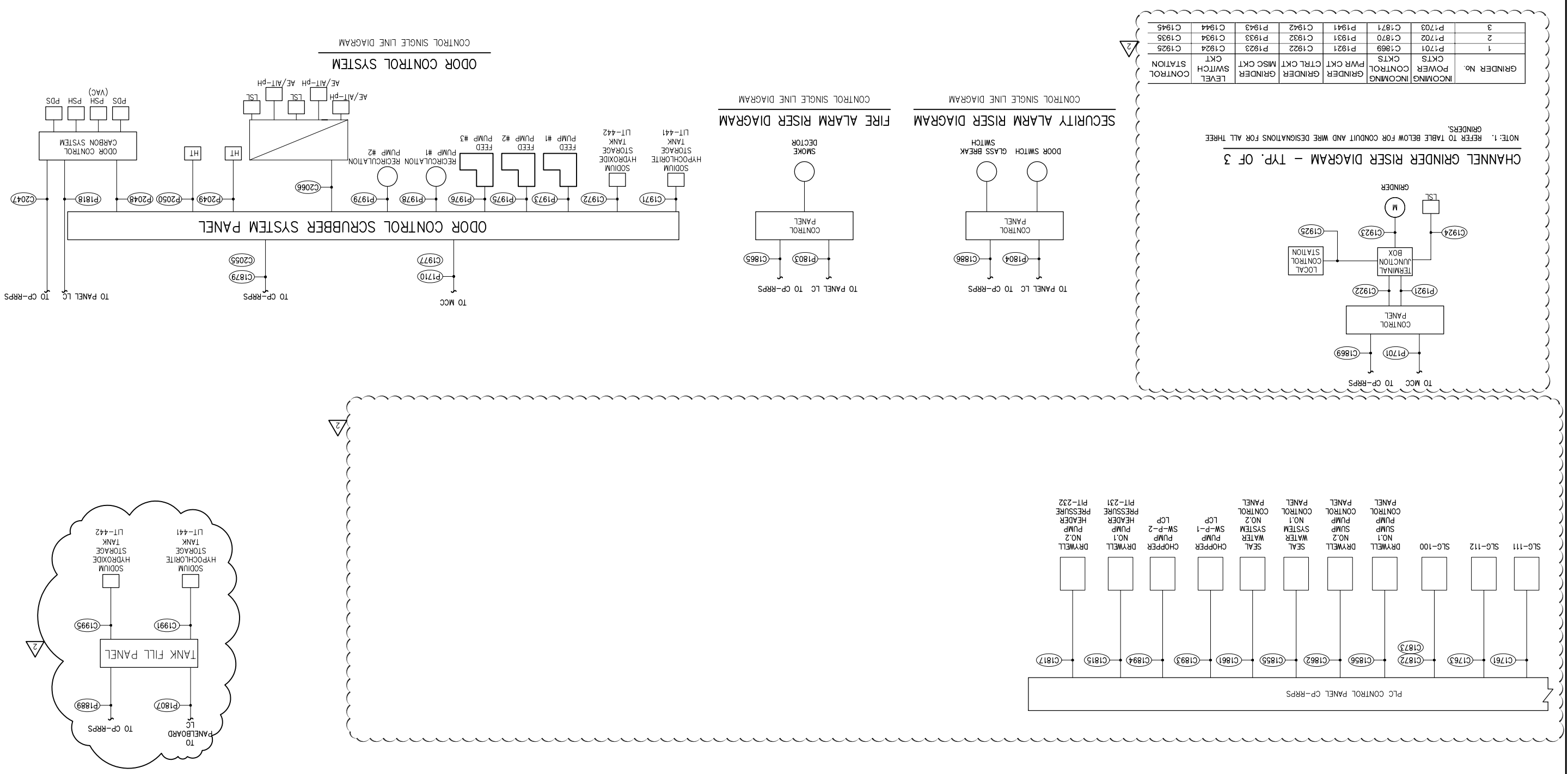


| GRINDER No. | INCOMING POWER CKTS | INCOMING CONTROL CKTS | GRINDER PWR CKT | GRINDER CTRL CKT | GRINDER MISC CKT | LEVEL SWITCH CKT | CONTROL STATION |
|---|---|---|---|---|---|---|---|
| 1 | P1701 | C1869 | P1921 | C1922 | P1923 | C1924 | C1925 |
| 2 | P1702 | C1870 | P1931 | C1932 | P1933 | C1934 | C1935 |
| 3 | P1703 | C1871 | P1941 | C1942 | P1943 | C1944 | C1945 |

ADDENDUM NO. 4

DATE 01-07-08

BY H & S

ATTACHMENT NO. ESK-12

# Electrical Riser Diagrams - Sheet 1

RIVERSIDE ROAD PUMP STATION UPGRADES

575 RIVERSIDE ROAD, ROSWELL GA. 30075

H & S JOB NUMBER 30039

CONTRACT NUMBER

REFER TO CONTRACT DRAWING NUMBER E18

SHEET 1 OF 1

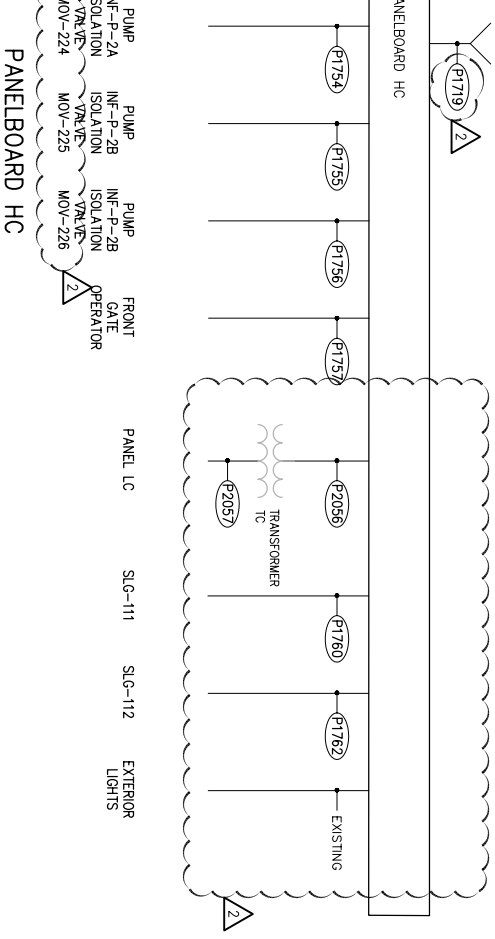





## PANELBOARD HC

RISER DIAGRAM




## INFLUENT PUMP RISER DIAGRAM – TYP. OF 6

| MSG-AA | INF-P-BB | P-CCCC | C-DDDD | C-EEEE | C-FFFF | P-GGGG | C-HHHH | C-JJJJ | P-LLLL | C-MMMM | JB-QQQ | C-XXXX | C-YYYY | C-ZZZZ |
|---|---|---|---|---|---|---|---|---|---|---|---|---|---|---|
| MSG-1 | INF-P-1A | P1051 | C1106 | C1107 | C1105 | P1101 | C1103 | C1104 | P1109 | C1108 | JB-211 | C1110 | C1111 | C1112 |
| MSG-1 | INF-P-1B | P1052 | C1206 | C1207 | C1205 | P1201 | C1203 | C1204 | P1209 | C1208 | JB-212 | C1210 | C1211 | C1212 |
| MSG-1 | INF-P-1C | P1053 | C1306 | C1307 | C1305 | P1301 | C1303 | C1304 | P1309 | C1308 | JB-213 | C1310 | C1311 | C1312 |
| MSG-2 | INF-P-2A | P1071 | C1406 | C1407 | C1405 | P1401 | C1403 | C1404 | P1409 | C1408 | JB-214 | C1410 | C1411 | C1412 |
| MSG-2 | INF-P-2B | P1072 | C1506 | C1507 | C1505 | P1501 | C1503 | C1504 | P1509 | C1508 | JB-215 | C1510 | C1511 | C1512 |
| MSG-2 | INF-P-2C | P1073 | C1606 | C1607 | C1605 | P1601 | C1603 | C1604 | P1609 | C1608 | JB-216 | C1610 | C1611 | C1612 |

NOTE: * - IS THE DESIGNATION (1,2,3,4,5 OR 6) FOR A TYPICAL CONTROL ELEMENT FOR EACH ONE OF THE SIX INFLUENT PUMPS SUCH AS VS/TE/SH/ZSC/ZSO/SV/FS




## VENTILATION ALARM LOCAL CONTROL PANEL – TYP. OF 2

RISER DIAGRAM

NOTE: 1. REFER TO TABLE BELOW FOR CONDUIT AND WIRE DESIGNATIONS FOR ALL VENTILATION CONTROL PANELS.

| VENTILATION CONTROL PANEL | FLOW SWITCH | INCOMING 120V AC CKTS | INCOMING CONTROL CKTS | FLOW SWITCH CTRL CKT | SIGNALING DEVICE CTRL CKT |
|---|---|---|---|---|---|
| VCP-1 | FSL-341 | P1801 | C1857 | C2011 | C2012 |
| VCP-2 | FSL-342 | P1802 | C1863 | C2016 | C2017 |

| ADDENDUM NO. | DATE | Electrical Riser Diagrams - Sheet 2 | H & S JOB NUMBER | REFER TO CONTRACT DRAWING NUMBER |
|---|---|---|---|---|
| 4 | 01-07-08 | | 30039 | E19 |
| ATTACHMENT NO. | BY | RIVERSIDE ROAD PUMP STATION UPGRADES<br>575 RIVERSIDE ROAD, ROSWELL GA. 30075 | CONTRACT NUMBER | SHEET 1 OF 1 |
| ESK-13 | H & S | | | |

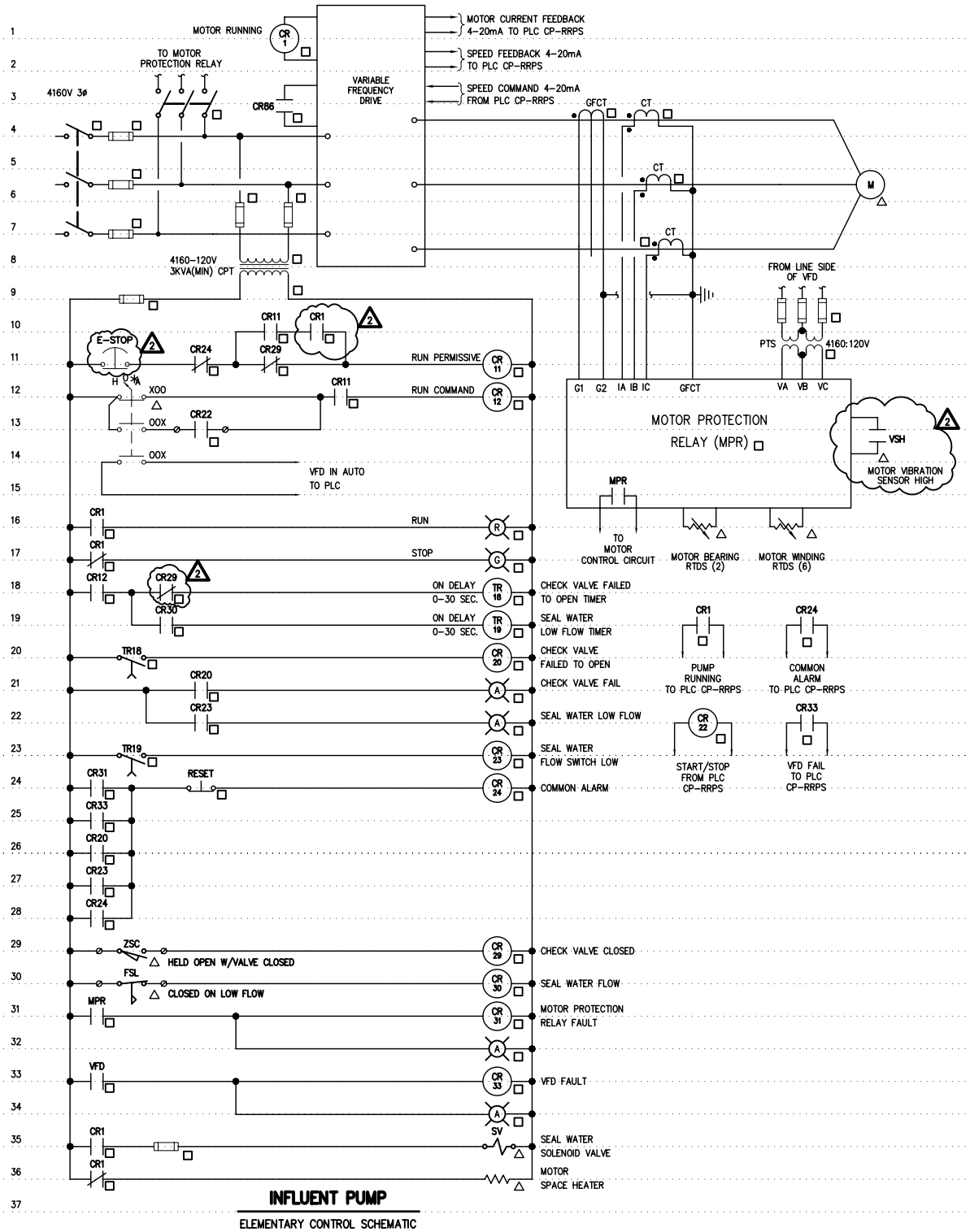


**INFLUENT PUMP**

ELEMENTARY CONTROL SCHEMATIC

| | | | |
|---|---|---|---|
| REFER TO CONTRACT DRAWING NUMBER E20 | | | SHEET 1 OF 1 |
| H & S JOB NUMBER 30039 | | CONTRACT NUMBER . | |
| ELECTRICAL MEDIUM VOLTAGE ELEMENTARY CONTROL DIAGRAM | | RIVERSIDE ROAD PUMP STATION UPGRADES 575 RIVERSIDE ROAD, ROSWELL GA. 30075 | |
| ADDENDUM NO. 4 | DATE 01-07-08 | BY H & S | |
| ATTACHMENT NO. ESK-14 | | | |

01/07/08 12:02pm FILE= O:\30039\Drawings\Electrical\ADD-3 - E20-SKLETCHES by VKANTCHEVA XREF FILE = NONE

NOTES:

1. PLC-RRPS SHALL BE PROVIDED WITH HOT BACK-UP POWER SUPPLY, PROCESSOR, AND COMMUNICATION MODULES AS REQUIRED FOR A FULLY REDUNDANT CONTROL SYSTEM.
2. REPLACE EXISTING CABLE RUNNING FROM EXISTING ANTENNA TO THE EXISTING RADIO. DO NOT SPLICE. REFER TO SPECIFICATION SECTION 17180 FOR CABLE REQUIREMENTS.

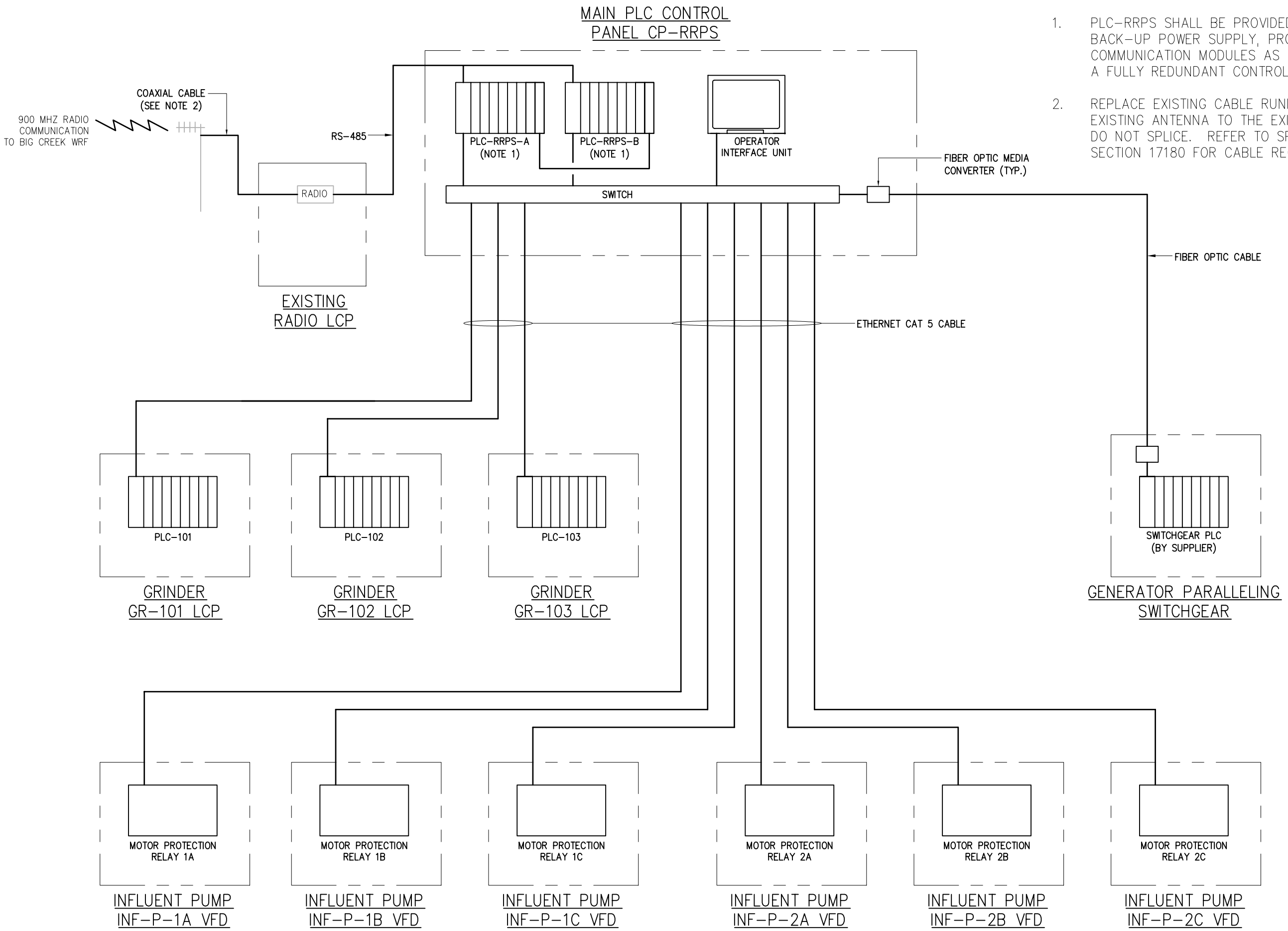


| | |
|---|---|
| REFER TO CONTRACT DRAWING NUMBER | 12 |
| SHEET 1 OF 1 | |
| H & S JOB NUMBER | 30039 |
| CONTRACT NUMBER | . |
| Instrumentation Control System Block Diagram | |
| RIVERSIDE ROAD PUMP STATION UPGRADES<br>575 RIVERSIDE ROAD, ROSWELL GA. 30075 | |
| DATE | 01-07-08 |
| BY | H & S |
| ADDENDUM NO. | 4 |
| ATTACHMENT NO. | ISK-1 |

01/07/08 11:21am FILE= O:\30039\Drawings\Instrumentation\Instrmentation Sketch 1 by CPLANTER XREF FILE = NONE

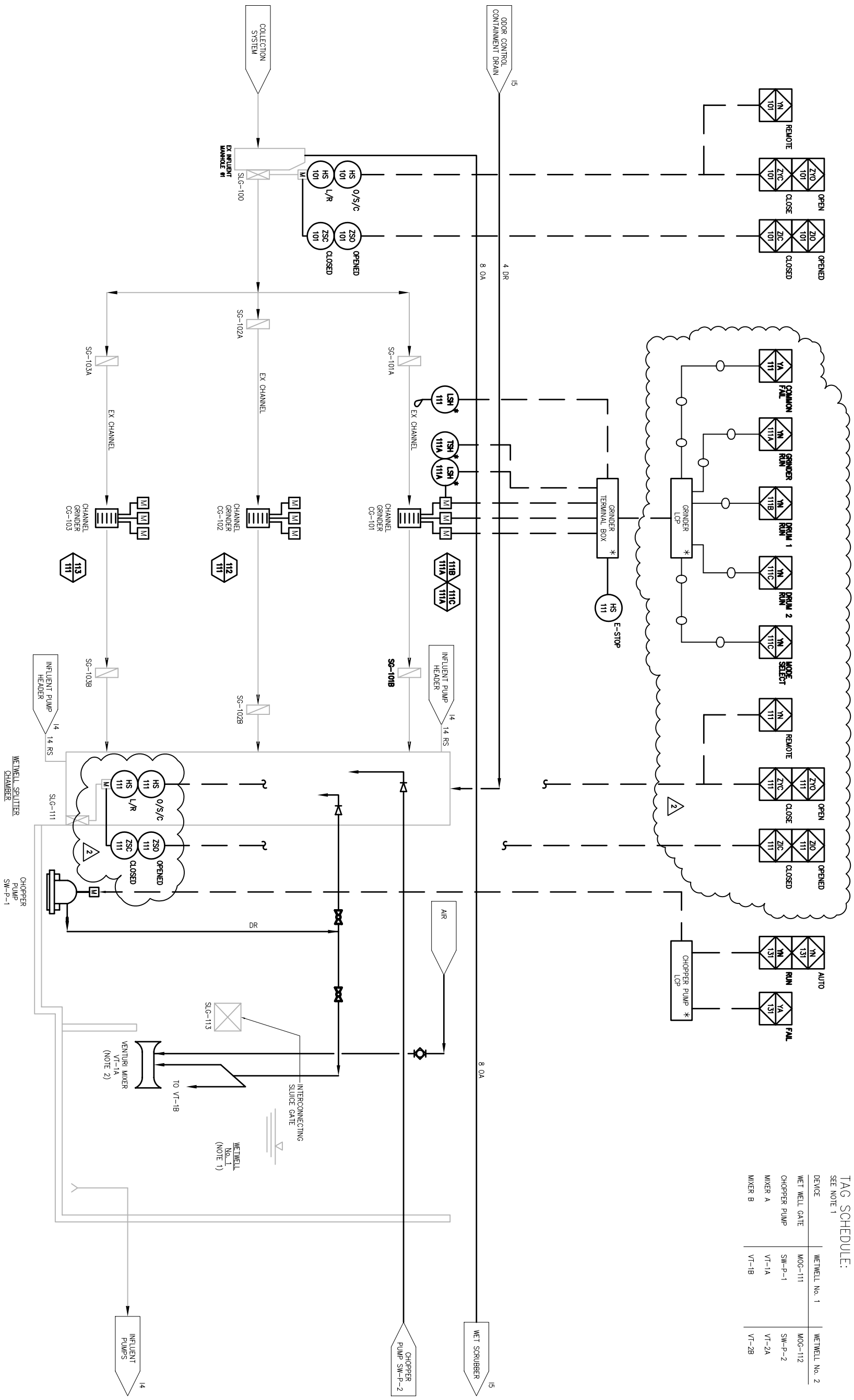


NOTES:

1. WETWELL No. 2 NOT SHOWN FOR CLARITY. EQUIPMENT AND DEVICES AT WETWELL No. 2 ARE IDENTICAL TO EQUIPMENT AND DEVICES AT WETWELL No. 1 (SEE TAG SCHEDULE FOR EQUIPMENT AND DEVICES AT WETWELL No. 2).
2. VENTURI MIXING SYSTEM CONSISTS OF TWO VENTURI MIXERS PER WETWELL. SECOND MIXER NOT SHOWN FOR CLARITY.

TAG SCHEDULE:
SEE NOTE 1

| DEVICE | WETWELL No. 1 | WETWELL No. 2 |
|---|---|---|
| WET WELL GATE | MOG-111 | MOG-112 |
| CHOPPER PUMP | SW-P-1 | SW-P-2 |
| MIXER A | VT-1A | VT-2A |
| MIXER B | VT-1B | VT-2B |

| ADDENDUM NO. | DATE | Instrumentation Influent Grinders and Wetwell Mixing P&ID | H & S JOB NUMBER | REFER TO CONTRACT DRAWING NUMBER |
|---|---|---|---|---|
| 4 | 01-07-08 | | 30039 | 13 |
| ATTACHMENT NO. | BY | RIVERSIDE ROAD PUMP STATION UPGRADES<br>575 RIVERSIDE ROAD, ROSWELL GA. 30075 | CONTRACT NUMBER | SHEET 1 OF 1 |
| ISK-2 | H & S | | . | |

01/07/08 11:21am FILE= O:\30039\Drawings\Instrumentation\Instrmentation Sketch 1 by CPLANTER XREF FILE = NONE

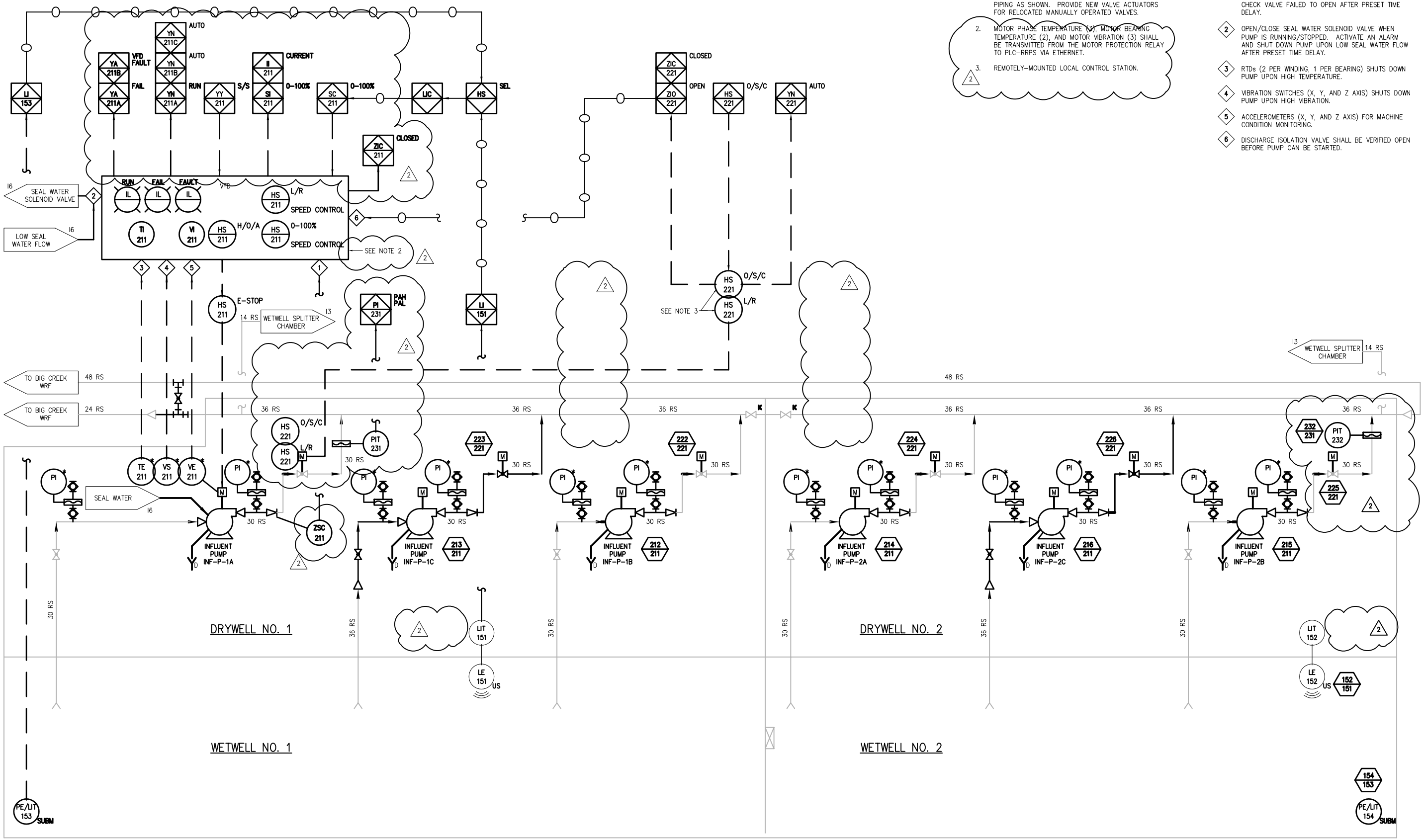


## NOTES:

1. EXISTING PLUG VALVE FOR PUMPS INF-P-1A, INF-P-1B, INF-P-2A, AND INF-P-2B SHALL BE RE-USED AS ISOLATION VALVES IN PUMP DISCHARGE PIPING AS SHOWN. PROVIDE NEW VALVE ACTUATORS FOR RELOCATED MANUALLY OPERATED VALVES.
2. MOTOR PHASE TEMPERATURE (3), MOTOR BEARING TEMPERATURE (2), AND MOTOR VIBRATION (3) SHALL BE TRANSMITTED FROM THE MOTOR PROTECTION RELAY TO PLC-RRPS VIA ETHERNET.
3. REMOTELY-MOUNTED LOCAL CONTROL STATION.

## INTERLOCK SCHEDULE:

1. CHECK VALVE SHALL BE CLOSED FOR PUMP START PERMISSIVE. CHECK VALVE SHALL BE VERIFIED OPEN AFTER PRESET TIME DELAY AFTER PUMP STARTS. ACTUATE AN ALARM AND SHUT DOWN PUMP UPON CHECK VALVE FAILED TO OPEN AFTER PRESET TIME DELAY.
2. OPEN/CLOSE SEAL WATER SOLENOID VALVE WHEN PUMP IS RUNNING/STOPPED. ACTIVATE AN ALARM AND SHUT DOWN PUMP UPON LOW SEAL WATER FLOW AFTER PRESET TIME DELAY.
3. RTDs (2 PER WINDING, 1 PER BEARING) SHUTS DOWN PUMP UPON HIGH TEMPERATURE.
4. VIBRATION SWITCHES (X, Y, AND Z AXIS) SHUTS DOWN PUMP UPON HIGH VIBRATION.
5. ACCELEROMETERS (X, Y, AND Z AXIS) FOR MACHINE CONDITION MONITORING.
6. DISCHARGE ISOLATION VALVE SHALL BE VERIFIED OPEN BEFORE PUMP CAN BE STARTED.

REFER TO CONTRACT DRAWING NUMBER 14

SHEET 1 OF 1

H & S JOB NUMBER 30039

CONTRACT NUMBER .

# Instrumentation Main Sewage Pump P&ID

RIVERSIDE ROAD PUMP STATION UPGRADES

575 RIVERSIDE ROAD, ROSWELL GA. 30075

DATE 01-07-08

BY H & S

ADDENDUM NO. 4

ATTACHMENT NO. ISK-3

01/07/08 11:21am FILE= O:\30039\Drawings\Instrumentation\Instrmentation Sketch 1 by CPLANTER XREF FILE = NONE

NOTES:

1. 3 HYDROGEN SULFIDE MONITORS SHALL BE EQUALLY SPACED THROUGHOUT THE VESSEL.

INTERLOCK SCHEDULE:

1. SHUT DOWN ODOR CONTROL SYSTEM UPON SUPPLY FAN FAILURE. SHUT DOWN FAN UPON ODOR CONTROL SYSTEM FAILURE.
2. RECIRCULATION PUMP RUNS CONTINUOUSLY WHEN ODOR CONTROL SYSTEM IS RUNNING. SHUT DOWN PUMP IF LOW LEVEL IS DETECTED IN ASSOCIATED SUMP.
3. SHUT DOWN CHEMICAL PUMPS IF LOW LEVEL IS DETECTED IN ASSOCIATED SUMP OR ASSOCIATED TANK.
4. SODIUM HYDROXIDE PUMPS ARE FLOW-PACED BASED ON PH IN RESPECTIVE SUMP. SODIUM HYPOCHLORITE PUMPS ARE FLOW-PACED BASED ON ORP LEVEL IN RESPECTIVE SUMP.
5. SHUT DOWN ODOR CONTROL SYSTEM UPON EXHAUST FAN FAILURE OR HIGH SUCTION VACUUM. SHUT DOWN FAN UPON ODOR CONTROL SYSTEM FAILURE.
6. LOW LEVEL SWITCH IN ULTRASONIC LEVEL TRANSMITTER PREVENTS ASSOCIATED METERING PUMP FROM RUNNING WHEN TANK IS AT LOW LEVEL.
7. SHUT DOWN EXHAUST FAN UPON HIGH DISCHARGE PRESSURE.
8. SHUT DOWN EXHAUST FAN UPON HIGH SUCTION VACUUM.

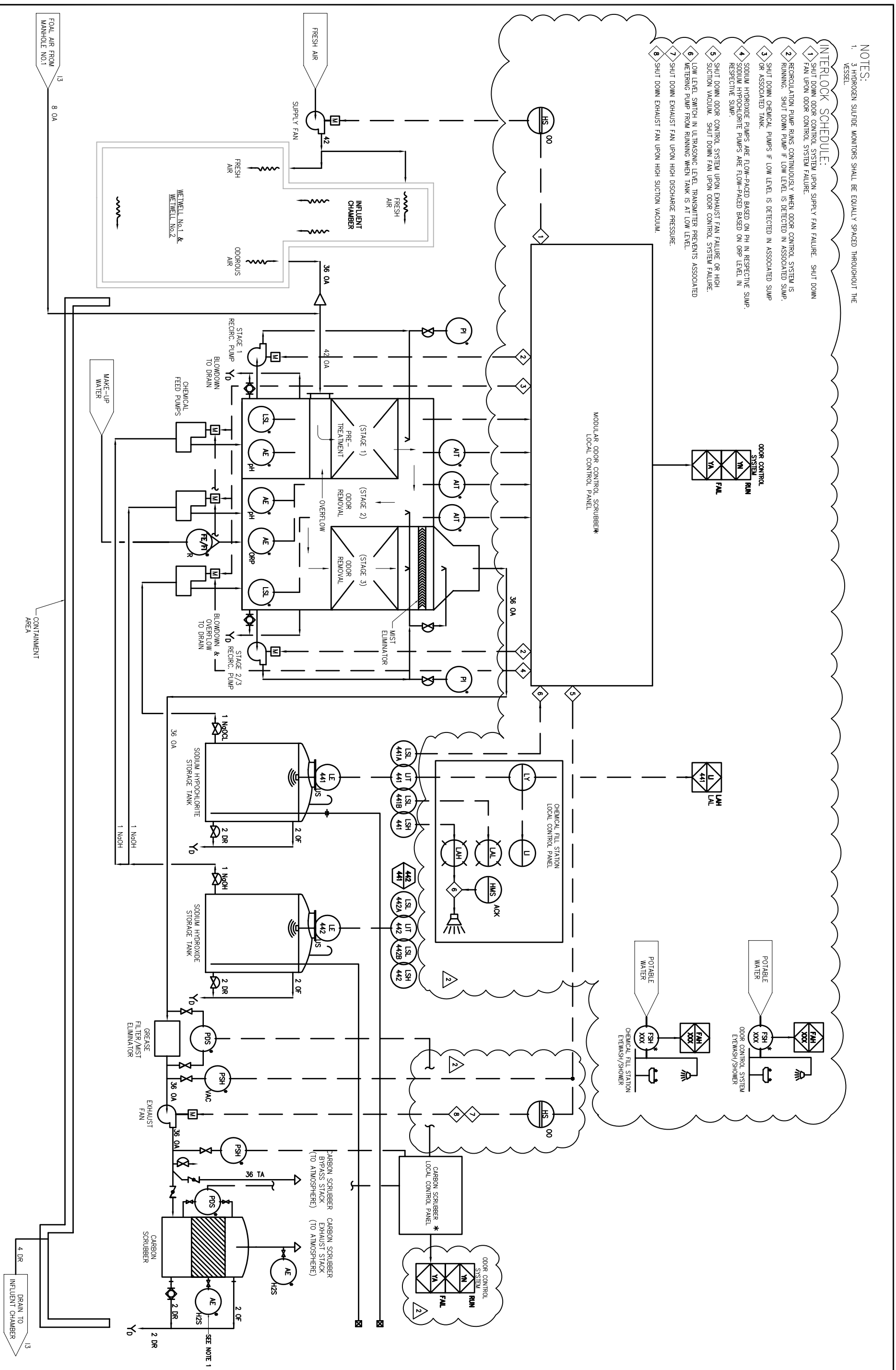


| ADDENDUM NO. | DATE | Instrumentation Odor Control System P&ID | H & S JOB NUMBER | REFER TO CONTRACT DRAWING NUMBER |
|---|---|---|---|---|
| 4 | 01-07-08 | | 30039 | 15 |
| ATTACHMENT NO. | BY | RIVERSIDE ROAD PUMP STATION UPGRADES<br>575 RIVERSIDE ROAD, ROSWELL GA. 30075 | CONTRACT NUMBER | SHEET 1 OF 1 |
| ISK-4 | H & S | | . | |

01/07/08 12:48pm FILE= O:\30039\Drawings\Instrumentation\Instrmentation Sketch 4 by CPLANTER XREF FILE = NONE

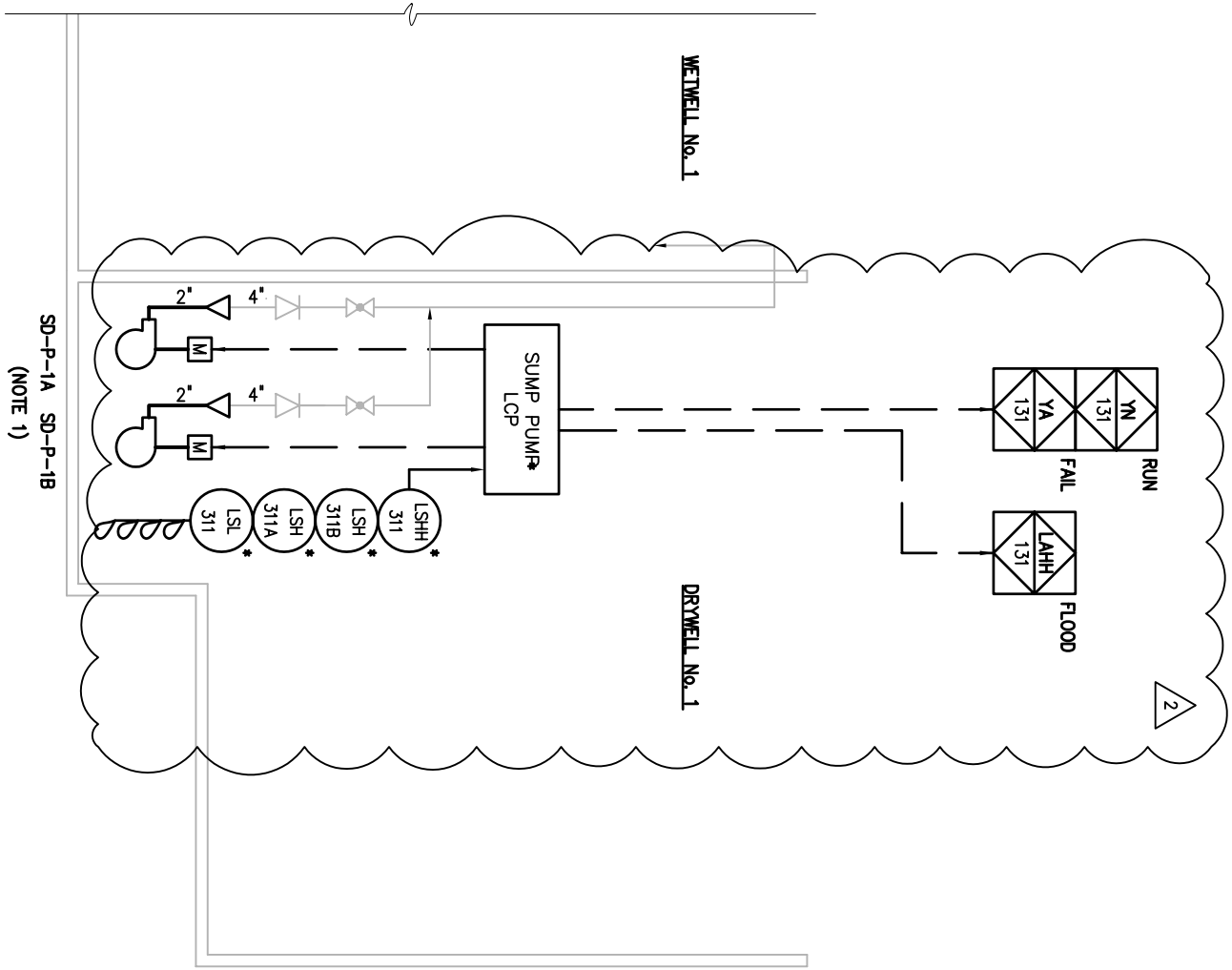


# DRYWELL DUPLEX SUMP PUMP SYSTEM

PROCESS & INSTRUMENTATION DIAGRAM

| ADDENDUM NO. | DATE | Instrumentation Miscellaneous System P&ID | H & S JOB NUMBER | REFER TO CONTRACT DRAWING NUMBER |
|---|---|---|---|---|
| 4 | 01-07-08 | | 30339 | 16 |
| ATTACHMENT NO. | BY | RIVERSIDE ROAD PUMP STATION UPGRADES<br>575 RIVERSIDE ROAD, ROSWELL GA. 30075 | CONTRACT NUMBER | SHEET 1 OF 1 |
| ISK-5 | H & S | | | |