DEPARTMENT OF PURCHASING & CONTRACT COMPLIANCE

Winner 2000- 2006 Achievement of Excellence in Procurement Award
National Purchasing Institute

Jerome Noble, Director

January 9, 2008

Re: Bid # 071TB58420K-RS Riverside Road Pump Station Upgrade

Dear Bidders:

Attached is one (1) copy of Addendum 4, hereby made a part of the above referenced Invitation to Bid # 071TB58420K-RS Riverside Road Pump Station Upgrade.

The bid due date for this project has been changed to Thursday, January 31, 2008 at 11:00 AM. This Addendum forms a part of the contract documents and modifies the original documents as noted below.

Except as provided herein, all terms and conditions in the Request for Proposal referenced above remain unchanged and in full force and effect.

Sincerely,

Donna Jenkins

Donna Jenkins,
Chief Assistant Purchasing Agent

See attached documents

130 Peachtree Street, S.W. · Suite 1168 · First Floor · Atlanta, Georgia 30303-3459 · Telephone (404) 730-5800

ADDENDUM No. 4

Questions / Responses

Q: The deductible for the Flood and Earthquake insurance is too low. Will the County consider a $500,000 deductible?
A: See Item 4 below under **Corrections to the Bid Documents**.

Q: Is the entire project within the flood plain or 100 year flood zone?
A: No. Only a portion of the project is in the flood zone. See Drawings C2 and C3. The 100 year flood elevation is denoted by the 867.0 foot contour line and is also labeled separately as such.

Q: Can the roof tiles/shingles be reused for reconstruction of the mansard roof on the south side of the building (Drawing A3)?
A: Tiles may be reused where they match in color, however the tiles on the roof area to be removed are not the same color as the tiles to be matched.

Corrections to the Bid Documents

Item 1 Cover page – change the **Bid Due Time and Date** to **"11:00 AM., *Thursday, January 31, 2008*".**

Item 2 Section 00020, Invitation to Bid – in the fourth line of the first paragraph, change the date from Monday, January 14, 2008 to "*Thursday, January 31, 2008*".

Item 3 Delete pages 3 and 4 of the Section 00300 – Bid Form and replace with the attached pages 3 and 4.

Item 4 Section 490, Insurance Information Requirements, paragraph 9 (page 2) – Delete the $25,000 amount for Flood and Earthquake Deductible and replace with $250,000

Item 5 Specification 01025, Paragraph 1.03, paragraph M, renumber as paragraph "N" and replace the first sentence as follows:

Allowance Bid Items (Bid Items 3.1, 3.2, 3.3, 3.4 & 3.5): The items of work listed as an Allowance Bid Item may, or may not, be completed as part of this project.

Item 6 Specification 01025, Paragraph 1.03, add the following paragraph:

M. *<u>Bid Item 3.5 – Allowance for Configuration and Programming of the Operator Interface at the Big Creek WRF and Radio Telemetry Modifications Between Riverside Pump Station and Big Creek WRF:</u> Bid Item 3.5 is an Owner-controlled allowance to pay for the work associated with re-programming the existing operator interface for the computer that controls the County's lift stations and any modifications to the existing radio telemetry system to accommodate the increased I/O between the Big Creek computer and the Riverside Pump Station PLC. This work is to be performed by Dexter Fortson Associates as part of the Instrumentation and Control System Service Provider scope of work.*

Item 7 Specification 01660, paragraph 1.04 D., delete the words *"power, water,"* from the paragraph.

Item 8 Specification 02829, paragraph 2.03 A., add the following subparagraph:

7. Provide a Fire department override switch to allow the fire department to open the gate in the event of an emergency. Override switch is to be manufactured by the Knox Company and specifically keyed for the City of Roswell Fire Department

Item 9 Specification 08710, Part 2 – Products, add the following paragraph:

FIRE DEPARTMENT KEY ACCESS VAULT

A. Furnish and install a Fire Department Key Access vault to allow the Fire Department to gain access to a building entrance key in the event of an emergency. Key Access Vault is to be a Knox-Box Model 3200 Series as manufactured by the Knox Company.

B. The Key Access Vault is to be specifically keyed for the City of Roswell Fire Department.

C. Provide all necessary mounting hardware to attach the Key Access Vault to the exterior of the building at the location agreed upon by the City of Roswell Fire Department and the Owner.

Item 10 Specification 11000, delete paragraph 3.06 in its entirety and replace with the following:

H. All costs in connection with field testing of equipment such as lubricants, fuel, chemicals, temporary instruments, labor, equipment, etc., shall be borne by the Contractor. Power and water shall be supplied by the Owner unless otherwise specified in the individual equipment specifications.

Item 11 Specification 11195, in paragraph 2.02 G. 2. a. 2), delete the last sentence and replace with the following:

The "Low System Pressure"' alarm shall be activated if the system pressure remains below the low pressure setpoint for an adjustable time delay.

Item 12 Specification 11395, in paragraph 1.01 B., delete the last sentence

Item 13 Specification 11395, delete paragraph 2.03 A. 1. g. and renumber succeeding paragraph.

Item 14 Specification 11395, delete paragraph 2.03 D. 9 in its entirety and replace with the following:

9. The motor protector shall be furnished with three independent serial communication ports; one RS 232 to allow local computer access and two RS485 ports for remote communications. All three serial ports shall support ModBus RTU protocol. In addition, one 10-baseT Ethernet port that supports Modbus RTU via TCP/IP protocol shall be provided. All four ports shall be capable of being active simultaneously. The new motor protectors shall be networked as indicated on the Drawings.

Item 15 Specification 11431, paragraph 2.02 G. 2., replace the word "*Submersible"* with the word *"Immersible"* in the first sentence.

Item 16 Delete specification 13251 – Modular Odor Control Scrubber in its entirety and replace with the attached, revised specification 13251 – Modular Odor Control Scrubber.

Item 17 Delete specification 13253 – Carbon Odor Control System & Accessories in its entirety and replace with the attached, revised specification 13253 – Carbon Odor Control System & Accessories

Item 18 Specification 15863, paragraph 2.03 E. 2., delete the first sentence.

Item 19 Specification 15863, paragraph 2.03 F., delete the first sentence and replace with the following:

Fan wheel shall have single thickness air foil type blades which limit load horsepower characteristics, and shall not exceed the brake horsepower shown on the schedule.

Item 20 Specification 16721, paragraph 3.02, add the following subparagraph:

3. City of Roswell Fire Department

Item 21 Delete specification 16347 – Medium Voltage Vacuum Circuit Breaker Switchgear in its entirety and replace with the attached revised specification 16347 – Medium Voltage Vacuum Circuit Breaker Switchgear.

Item 22 Specification 16620, delete paragraph 2.05 K, and replace with the following:

K. All six of the stator windings shall be brought out to 3 current transformers for differential protection as indicated on the Drawings. A zero sequence transformer shall be furnished and installed as indicated on the Drawings.

Item 23 Specification 16620, paragraph 2.09 E., delete the text "240 VAC" and replace with the words *"208 VAC".*

Item 24 Specification 16620, delete paragraph 2.14 E. 1. and replace with the following:

1. The unit shall be a 30KVA, 120/208 3-phase, 4-wire combination of a dry type transformer and a lighting panelboard. Combination power units located outdoors shall be suitable for outdoor use rated NEMA 3R.

Item 25 Specification 17000, add the following paragraph to paragraph 1.01 B.:

12. Reprogramming of the existing HMI software on the existing pump station SCADA computer at the Big Creek WRF and all

modifications to the existing 450 MHZ radio system between the Riverside Road Pump Station and the Big Creek WRF for required control and data communication is to be performed by Dexter Fortson, Inc. through the Instrumentation and Control System Service Provider. Software modifications shall conform to the requirements of Section 17200 – Control and Information System Software Requirements. An allowance for this work has been included in the bid form, and Dexter Fortson will be paid from this allowance, as a direct pass-through from the Instrumentation and Control System Service Provider and Contractor. The Contractor, through the Instrumentation and Control System Service Provider, shall retain sole-source responsibility for the proper functioning of the new/modified system.

Item 26 Specification 17180, add the following paragraph to paragraph 1.03 A.:

2. A spare Ethernet network interface unit shall be furnished and shall be stored in the PLC-RRPS control panel.

Item 27 Specification 17180, delete paragraph 2.01 A. in its entirety and replace with the following:

A. An IEEE 802.3 Ethernet local area network shall be used for communications between the pump station PLCs.

Item 28 Specification 17180, add the following paragraph to Part 2 – Equipment:

2.06 FIBER OPTIC MEDIA CONVERTERS

A. Fiber optic media converters shall be provided to transform the Ethernet CAT5e cable signal into an optical signal suitable for transmission over the fiber optic cable specified herein. Fiber optic media converters shall be modular, rack mounted, or mounted within the PLC rack.

B. Fiber optic media converters shall meet the following minimum performance requirements:

1. Input Power: 110/220 VAC or 24 VDC (as required) for stand-alone panel-mounted modules or

	+5 VDC for PLC rack-mounted modules
2. *Operating Temperature:*	*0° - 60°C*
3. *Node-to-Node Distance:*	*6500 feet*
4. *Wavelength:*	*850 or 1300 nanometers*
5. *Connector Type:*	*SC, FC, or ST*

C. The PLC manufacturer's standard, PLC rack-mounted fiber optic transceiver may also be used, subject to approval by the Engineer.

D. Acceptable fiber optic media converters shall be as manufactured by Black Box or equal."

Item 29 Add the attached specification, 17550 – Panel Instruments and Accessories to the Bid Documents.

Item 30 Delete specification 17920 – Control System Input/output List in its entirety and replace with the attached, revised specification 17920 – Control System Input/output List.

Item 31 Specification 17950, paragraph 3.02 B. 1., add the following paragraphs:

k. Speed Indicator
l. Motor Current Indicator
m. MOTOR FAILURE indicating light

Item 32 Specification 17950, paragraph 3.03 A., add the following sentence to the end of the paragraph:

Six solenoid valves and six seal water control units are provided under Division 11, and are used to provide seal water to the Influent Pumps.

Item 33 Specification 17950, paragraph 3.03 C., add the following paragraph:

6. *The seal water flow control system shall shut down the pump upon low seal water flow detection. The interlock shall be hardwired directly to the pump motor control circuit.*

Item 34 Specification 17950, delete paragraph 3.07 in its entirety and replace with the following:

3.07 ELECTRICAL DISTRIBUTION SYSTEM

A. A control panel and associated PLC will be provided under Division 16 for the Generator Paralleling Switchgear. The switchgear PLC shall reside on the pump station Ethernet network as shown on the Drawings. The switchgear PLC shall transmit data to the network as specified in Section 16347.

Item 35 Specification 17950, paragraph 3.08 B. 1., add the following paragraph:

e. Alarm Silence pushbutton

Item 36 Specification 4200, paragraph 1.01 A., add the following paragraphs:

2. Salvage brick from the demolition of the existing structure to rebuild the exterior wall of the pump station structure.

3. Salvaged or new brick may be used to build the screen wall around the odor control area.

4. Columns for architectural fence are to be constructed with new brick.

Item 37 Specification 4200, paragraph 2.02, add the following paragraphs:

E. Face Brick

1. ASTM C-216, Type FBS, SW. modular as manufactured and distributed by Belden Brick Company, Glen-Gery Corporation, Cherokee Sanford Group, Inc. or equal. Face brick shall be selected and approved by the Owner from samples submitted. Select color to match existing brick. Sand finished brick shall not be accepted.

2. Net area compressive strength of brick masonry units shall be a minimum of 3200 psi when tested in accordance with ASTM C67. Compressive strength of masonry (f'm) shall be a minimum of 1200 psi in accordance with ACI 530.1 when these units are used with the mortar specified in Section 04100.

Corrections to the Drawings

Item 1 Modify Drawing I2 – Control System Block Diagram in accordance with the attached sketch ISK-1.

Item 2 Modify Drawing I3 – Influent Grinders and Wetwell Mixing P&ID in accordance with the attached sketch ISK-2.

Item 3 Modify Drawing I4 – Main Sewage Pump P&ID in accordance with the attached sketch ISK-3.

Item 4 Modify Drawing I5 – Odor Control System P&ID in accordance with the attached sketch ISK-4.

Item 5 Modify Drawing I6 – Miscellaneous Systems P&ID in accordance with the attached sketch ISK-5.

Item 6 Modify Drawing E2 – Site Plan in accordance with the attached sketch ESK-1.

Item 7 Modify Drawing E3 – Medium Voltage Single line Diagram in accordance with the attached sketch ESK2.

Item 8 Modify Drawing E4 – Low Voltage Single line Diagram in accordance with the attached sketch ESK3.

Item 9 Modify Drawing E5 – Power and Control Bottom Plan in accordance with the attached sketch ESK4.

Item 10 Modify Drawing E6 – Power and Control Intermediate Plan in accordance with the attached sketch ESK5.

Item 11 Modify Drawing E7 – Power and Control Top Plan in accordance with the attached sketch ESK6.

Item 12 Modify Drawing E8 – Power and Control Roof Plan in accordance with the attached sketch ESK7.

Item 13 Modify Drawing E9 – Power and Control Partial Plan – Odor Control Area in accordance with the attached sketch ESK8.

Item 14 Modify Drawing E15 – Conduit & Wire Schedule – Sheet 1 in accordance with the attached sketch ESK-9.

Item 15 Modify Drawing E16 – Conduit & Wire Schedule – Sheet 2 in accordance with the attached sketch ESK-10.

Item 16 Modify Drawing E17 – Miscellaneous Schedules in accordance with the attached sketch ESK-11.

Item 17 Modify Drawing E18 – Riser Diagrams – Sheet 1 in accordance with the attached sketch ESK-12.

Item 18 Modify Drawing E19 – Riser Diagrams – Sheet 2 in accordance with the attached sketch ESK-13.

Item 19 Modify Drawing E20 – Medium Voltage Elementary Control Diagram in accordance with the attached sketch ESK-14.

Item 20 Drawing M9, detail A and detail C, delete the word "*ALTERNATE*" where it occurs in these details and replace with the words: *"Second Named Pump Manufacturer"*

Item 21 Drawing H2, add the following note to the drawing:

1. *Provide duct-mounted air flow switch rated for Class 1, division 2 location, suitable for vertical upflow installation, stainless steel vane, sealed from airflow, SPDT, McDonnell & Miller model AFE1 or equal. Install at location shown on drawing E7 and identified as FSL 341 and FSL 342.*

ACKNOWLEDGEMENT OF ADDENDUM NO. 4

The undersigned proposer acknowledges receipt of this addendum by returning one (1) copy of this form with the proposal package to the Purchasing Department, Fulton County Public Safety Building, 130 Peachtree Street, Suite 1168, Atlanta, Georgia 30335 by the Bid due date and time on **Thursday, January 31, 2008 at 11:00 A.M.**

This is to acknowledge receipt of Addendum No. 4, _____ day of _____, 2008.

_____
Legal Name of Bidder

_____
Signature of Authorized Representative

_____
Title

Item 3 – Allowances

Bid Item No.	Description	Bid Price
3.1	Testing Allowance	$ 10,000
3.2	Elevator Repair Allowance (per Specification Section 14200)	$ 225,000
3.3	Un-Foreseen Utility Conflict Allowance	$ 50,000
3.4	Owner Directed Work Allowance	$ 350,000
3.5	Allowance for Configuration and Programming of the Operator Interface at the Big Creek WRF and Radio Telemetry Modifications between Riverside Pump Station and Big Creek WRF	50,000
Subtotal Item 3 – Cash Allowance Items		$ 685,000

SCHEDULE OF "PRE-APPROVED EQUIPMENT"

Contractor shall circle the name of the manufacturer (one and only one) included in the base bid.

Section Number	Description	Manufacturer/Supplier
11141	Chopper-Type Submersible Pumps	(A) Vaughn (B) Hayward Gordon
11151	Vertical Non-Clog Pumps	(A) Morris Pumps (B) Flowserve
11395	Medium Voltage Variable Frequency Drives	(A) Rockwell Automation/Allen Bradley (B) Siemens Robicon (C) Toshiba
11221	Medium Voltage Motors	(A) Reliance Electric Co. (B) Siemens (C) US Motors/Emerson Electric Co (D) GE
11241	Venturi Mixer	(A) Waste Tec, Inc.
11431	Open Channel Sewage Grinders	(A) JWC Environmental, Inc
13251	Modular Odor Control Scrubber Equipment	(A) US Filter/Siemens Water Technologies (B) Duall Division/MetPro Corporation (C) Indusco (D) HEE
13252	Carbon Odor Control System & Accessories	(A) Calgon Carbon Corporation (B) Bay Products, Inc.
15566	Indoor Packaged Air Conditioning System	(A) Liebert
16620	Packaged Engine Generator System	(A) Caterpillar (B) Cummins (C) Detroit Diesel

SCHEDULE OF PRE-APPROVED INSTRUMENTATION AND CONTROL SYSTEM SERVICE PROVIDERS

Contractor shall circle the name of the System Integrator (one and only one) included in the base bid.

17000	Control and Information System Scope and General Requirements	(A) Control Instruments, Inc. (B) Global Control Systems, Inc. (C) M/R Systems (D) Revere Control Systems, Inc. (E) Southern Flow, Inc (E) Transdyn

The Bidder agrees hereby to commence work under this Contract, with adequate personnel and equipment, on a date to be specified in a written order of the Contracting Officer and to fully complete all work under this Contract within **Five hundred forty eight (548)** consecutive calendar days from and including said date.

The Bidder declares that he understands that the quantities shown for the unit prices items are subject to either increase or decrease, and that should the quantities of any of the items of work be increased, the Bidder proposes to do the additional work at the unit prices stated herein; and should the quantities be decreased, the Bidder also understands that payment will be made on the basis of actual quantities at the unit price bid and will make no claim for anticipated profits for any decrease in quantities; and that actual quantities will be determined upon completion of work, at which time adjustments will be made to the contract amount by direct increase or decrease.

In case of discrepancies between the figures shown in the unit prices and the totals, the unit prices shall apply and the totals shall be corrected to agree with the unit prices. In case of discrepancies between written amounts and figures, written amounts shall take precedence over figures and the sum of all Bid extensions (of unit prices) plus lump sum items shall take precedence over BID TOTAL.

The Bidder furthermore agrees that, in the case of a failure on his part to execute the Contract Agreement and Bonds within ten (10) days after receipt of conformed contract documents for execution, the Bid Bond accompanying his bid and the monies payable thereon shall be paid into the funds of the Owner as liquidated damages for such failure.

Enclosed is a Bid Bond in the approved form, in the sum of:_____

_____Dollars

($_____) according to the conditions of “Instructions to Bidders” and provisions thereof.

The undersigned acknowledges receipt of the following addenda (list by the number and date appearing on each addendum) and thereby affirms that its Bid considers and incorporates any modifications to the originally issued Bidding Documents included therein.

ADDENDUM # _____DATED _____

ADDENDUM # _____DATED _____

ADDENDUM # _____DATED _____

ADDENDUM # _____DATED _____

SECTION 13251

MODULAR ODOR CONTROL SCRUBBER

PART 1 -- GENERAL

1.01 SCOPE

A. Furnish, install, test, adjust, and place in satisfactory operation the Modular Odor Control Scrubber at the location shown on the Drawings and as specified herein. The Modular Odor Control Scrubber is to consist of a multi-stage FRP chemical scrubber, demisters, nozzles, internal media, recirculation pumps, chemical feed and control systems, and all necessary accessories required for a complete and operational Modular Odor Control Scrubber.

1.02 OPERATING CONDITIONS AND PERFORMANCE REQUIREMENTS

Number of Modular Scrubbers:	1
Air Flow Rate:	24,000
Average Inlet H_2S Concentration:	5 ppm
Peak Inlet H_2S Concentration:	15 ppm
Minimum Scrubber Removal Efficiency:	99.5%
Max. Pressure Drop (inlet flange to outlet flange):	7” w.c.
Maximum Equipment Footprint:	10 feet x 20 feet
Wind Load:	90 mph
Live Load:	200 lb/sq-ft
Seismic Zone:	4
Internal Pressure:	- 10” w.c.
Hydrostatic Loading:	Water depth of liquid with specific gravity of 1.1
Ambient Temperature Limits:	40 to 110 °F
Stage 1 Recirculation Pump Capacity:	400 gpm
Stage 2/3 Recirculation Pump Capacity:	600 gpm
Stage 1 Caustic Metering Pump Capacity:	5 gph
Stage 2/3 Caustic Metering Pump Capacity:	5 gph
Stage 2/3 Hypochlorite Metering Pump Capacity:	25 gph

1.03 SUBMITTALS

A. Submit the following information with the Shop Drawings in accordance with, or in addition to, the submittal requirements specified in Section 01300, Submittals, and Section 11000, Equipment General Provisions:

1. Dimensioned drawings of system showing assemblies, arrangements, piping, valves, and controls. Include operating and dry weights.

2. Materials of construction for all equipment including FRP equipment resin and interior coating descriptions for equipment interior surfaces.

3. Certified performance characteristics for both air and chemical performance of the equipment being provided. List air pressure drop and chemical consumption at specified design conditions.

4. Calculations verifying sizing of recirculation pumps and chemical metering pumps, pump performance and equipment data.

5. Complete motor nameplate data as defined by NEMA.

6. Complete instrumentation, control, logic, and power wiring diagrams. Instrumentation and control component data. Control panel front and rear panel layouts.

B. Operation and Maintenance Manuals in accordance with 01730, Operation and Maintenance Manuals.

C. Manufacturer's report of satisfactory installation and field operational tests.

D. Certificate of Conformance as required under Quality Assurance.

1.04 QUALITY ASSURANCE

A. Manufacturer's Qualifications:

1. The work covered by this Specification is intended to be standard equipment of proven reliability and as manufactured by reputable manufacturers having a minimum of 5 years experience in the production of packaged odor control scrubbers. The equipment furnished is to be designed, constructed, and installed in accordance as shown on the Contract Drawings and operated per Manufacturers' recommendations. The Manufacturer shall show evidence of at least five (5) similar design installations of the capacity of 15,000 cfm or larger, in satisfactory operation in wastewater treatment plants or wastewater pumping stations for at least 12 months.

B. The Contractor is responsible for the successful startup and testing of the Modular Odor Control Scrubber. Provide all necessary facilities, manpower, chemicals, tools, instrumentation, and laboratory testing services required to properly install, adjust, and place in operation a working system.

C. Manufacturer's Certifications:

1. Certificate of Conformance: Furnish a notarized letter/certificate, signed by a corporate officer of the manufacturer, stating that the design of the equipment meets the design and operating criteria specified in paragraph 1.02. Shop drawings will not be reviewed unless accompanied by the Certificate of Conformance.

PART 2 -- MATERIALS

2.01 ACCEPTABLE MANUFACTURERS

A. Subject to compliance with the requirements of this Section, the following manufacturers have the capability of manufacturing the work in this Section:

1. Siemens Water Technologies

2. Duall

3. Indusco

4. HEE

5. Or Pre-Approved Equal.

B. The naming of a manufacturer in this Section is not an indication that the manufacturer's standard equipment is acceptable in lieu of the specified component features. Naming is only an indication that the manufacturer may have the capability of engineering and supplying a system as specified.

2.02 OVERALL SYSTEM REQUIREMENTS

A. The Modular Odor Control Scrubber system is to consist of a complete pre-piped, pre-wired, and packaged construction Modular Odor Control Scrubber including an integral absorber with a minimum of two (2) packed bed scrubbing stages, a mist eliminator, chemical recirculation pumps, chemical metering pumps, piping, valves, fittings, ductwork, control panel, and all other equipment and accessories as specified to provide a complete and functioning system.

B. All wetted parts must be corrosion resistant to the recirculation scrubbing liquid.

C. No metallic wetted parts are allowed except for internal bolting constructed of Hastelloy C.

D. The sizes and capacities of the equipment components listed herein establish minimum requirements only – manufacturer is responsible for verifying sizing for the system furnished to meet the design criteria.

E. General Process Description: Foul air enters the system at the bottom of the first stage (counter current) of the scrubber. Scrubbing solution is sprayed onto the top of the packing to create a large liquid-gas interface surface area. The odor-causing components are absorbed by the scrubbing liquid. The air exits the first stage and passes to the top of the second stage. Scrubbing solution is sprayed on top of the media in the second stage. The air flows to a third, packed stage where scrubbing solution is sprayed on top of the media. The treated, odor-free air exits the scrubber after the third stage.

F. Scrubbing solution accumulates in a sump at the bottom of each stage to be recycled through the scrubber packing. A small amount of the scrubbing solution is wasted through the overflow connection in the sump. The amount of scrubber liquid wasted is controlled by adding water to the recycle line at a continuous rate.

2.03 MODULAR ODOR CONTROL SCRUBBER

A. General: The Modular Odor Control Scrubber system is to be a three-stage, once through packaged absorber of unitary construction. The scrubber system is to consist of one gas conditioning/pre-treatment stage followed by two vertical gas absorption sections. The packed bed sections are to include a spray header to distribute the liquid evenly over the packing. The treated airflow is to pass through a high efficiency mist eliminator prior to

discharge from the unit. The scrubber system is to be equipped with a minimum of two self-contained sumps. Provide each of the sumps with a low level switch. Fabricate the scrubber system of premium grade vinyl ester resin.

1. Scrubber orientation and interconnecting ductwork shall be as shown on the Drawings.

2. Provide access manways in the scrubber to allow access to the internals. At a minimum, provide access manways at the top and bottom of the packing sections, chemical sumps, and the mist eliminator area.

3. The system is to include all piping, valves, and internals. The materials of construction of the internal components are to be as follows:

Packing Media Support:	Vinyl Ester FRP grating
Packing Media:	Polypropylene
Liquid Distributor:	PVC
Spray Nozzles:	Polypropylene
Mist Eliminator:	Polypropylene

4. Mount the metering pumps, recirculation pumps, and control panel on the unit and the system is to be pre-piped and pre-wired shipped as a single piece.

5. Provide a titanium or Hastelloy internal grounding rod in each scrubber sump. Provide a grounding rod adjacent to the scrubber and connect to the internal grounding rods.

B. All equipment is to conform to applicable sections of the following standards except where otherwise specified herein.

1. PS 15-69: National Bureau of Standards Voluntary Product Standard “Custom Contact Molded Reinforced Polyester Chemical Resistant Process Equipment”.

2. ASTM D-883: “Definition of Terms Relating to Plastics”

3. ASTM D-2583: “Test for Indentation Hardness of Rigid Plastics by Means of Barcol Impressor.”

4. ASTM D-2563: “Recommended Practice for Classifying Visual Defects in Glass Reinforced Plastic Laminate Parts.”

5. ASTM D-4097-82: “Standard Specifications for Contact Molded Glass Fiber Reinforced Thermoset Resin Chemical Resistant Tanks.”

C. Materials of Construction:

1. The scrubber absorber vessel and accessories are to be contact molded and manufactured in accordance with NBS PS 15-69, ASTM D 4097 for contact molding. Any visual defects are not to exceed the tolerances specified in the table located in paragraph 3.01, item A.

2. Resin used in fabrication is to be a premium vinyl ester type such as Hetron 922 by Ashland Chemicals, Derakane 411 by Dow Chemical or approved equal. Reinforce the resin with an inner veil of a suitable synthetic organic fiber such as Nexus 1012.

3. Reinforcement: Glass fiber reinforcement used is to be commercial grade corrosion resistance borosilicate glass.
   a. Glass Fiber Reinforcement: Type C chemical grade, Type E electrical grade.
   b. Surfacing Veil: 10 mil Nexus 111 or equal.
   c. Mat: Type E (electrical grade) glass, 1 1/2 oz. per sq. ft with a nominal fiber length of 1.25 $\pm$ 0.25 inches, with a silane finish and styrene soluble binder.
   d. Continuous Glass Roving for Chopper Gun Spray-up Application: Type E grade with chrome or silane coupling agent.
   e. Woven Roving Reinforcement: 24 oz. per sq. yard Type E glass and have a 5 x 4 plain weave.

4. Miscellaneous
   a. Stainless Steel: Unless otherwise specified, all fasteners, and metal attachments, such as anchors, brackets etc shall be ANSI 316SS.
   b. Gaskets: EPDM, unless otherwise specified.

D. Fabrication:

1. General: Fabrication in accordance with NBS PS 15-69 and ASTM D-4097. Coat all non-molded surfaces with resin incorporating paraffin to facilitate a full cure of the surface. Seal all cut edges, bolt holes, secondary bonds with a resin coat prior to the final paraffinated resin coat. Fill all voids with a resin paste.

2. Corrosion Liner:
   a. Inner Surface of All Laminates: Resin rich and reinforced with NEXUS 111 with a minimum thickness of 10 mils.
   b. Interior Corrosion Layer: Two layers of 1-1/2 oz. per sq. ft. chopped strand mat. If the application is by chopper gun spray up, the glass fibers are to be 1/2 to 2 inches in length. The total corrosion liner thickness is to be a minimum of 100 mils and have a resin to glass ratio of 80/20. Lap all edges of reinforcement a minimum of one inch.

3. Structural Laminate: Alternating layers of 1-1/2 oz. per sq. ft. mat or chopped glass and 24 oz. per sq. yard woven roving applied to reach a designed thickness. Actual laminate sequences are to be determined by Manufacturer and shown on the fabrication drawings. Exterior surface is to be relatively smooth with no glass fibers exposed. Surface coat the exterior with a white gel coat containing ultraviolet light inhibitors.

4. Fiberglass Color Selection: Fiberglass color is to be selected by the Owner from the manufacturer's list of standard colors. Match the fiberglass colors for each piece of the scrubber system.

E. Accessories:

1. Air inlet, air outlet, pump connections, spray headers, baffles, packing support, drain, level connections, access for mist eliminator and all connections shown on the drawings shall be provided by the Manufacturer.

2. Tie-Down Lugs: Integrally molded into the walls of the sump.

3. Anchor Bolts: 316 SS and designed for the specified loads.

4. Flanges:
   a. Liquid Service: Per ANSI Std B 16.9
   b. Air Ducts: Duct flanges per PS 15-69 Table 2.
   c. Access Flanges: For manways, mist eliminator, and packing access are to air tight to the pressure equal to or higher than the corresponding fan static pressure and water tight.

5. Interior Fasteners: Corrosion resistance materials such as PVC or FRP.

F. Mist Eliminator: Provide a high efficiency, chevron-type mist eliminator at the discharge of the system. The mist eliminator is to remove 99% of all mist particles 40 microns and larger and 90% of all mist particles 10 microns and larger.

G. Mist Eliminator Wash System: Provide a liquid distributor system with nozzles to manually spray dilute hydrochloric acid for mist eliminator and packing washing.

H. Unitary Construction: Except for the inlet transition and the stack, Design, fabricate, factory assemble and ship the scrubber system to the job site as a single piece.

I. Piping: All chemical recycle, make-up water, drain and blowdown piping is to be SCH 80 PVC. Insulate and heat trace all external piping.

J. Neoprene Pad: Provide a 1/4” thick, 60 durometer neoprene rubber sheet to be placed underneath the scrubber vessel.

K. Packing Support: Provide fiberglass grating suitable for supporting a bed of tower packing under all conditions of operation, including a flooded bed condition. Permanently attach grating or grating support to the tower wall by lapping with fiberglass and resin. No bolting or metal fasteners will be allowed. Packing support open area is to be greater than 80 percent of the total cross section.

L. Packing:

1. Type: Non-clogging, non-nesting type, capable of being dumped onto the scrubber grating without causing physical damage. Provide sufficient packing to fill the bed to a depth within ±2” of the design after 90 percent of expected settling has occurred.

2. Material: Polypropylene

3. Size: 3.5” diameter.

4. Maximum Pressure Drop: 0.20 inches of water column per foot of packing.

5. Manufacturer: Tri-Packs as manufactured by Jaeger, Inc.,or equal.

2.04 RECIRCULATION PUMPS

A. Each sump shall have a recirculation pump. The recirculation pump shall be a seal-less, vertical, centrifugal type pump of CPVC construction for corrosion resistance and long service life. No seal water shall be required. The pump shall be suitable for solutions of pH to 14, and shall have a stainless steel one-piece rotor drive shaft covered with a one-piece sleeve and impeller. There shall be no liquid to metal contact, no seals, no pump bearings, bushings or wearing parts. The pump shall be mounted for easy service on the scrubber system sump. The pump shall be furnished with an all plastic fabricated strainer basket with ¼" diameter perforations in same to keep any large particles out of the casing or impeller area.

B. All units shall be statically and dynamically balanced throughout, and an analysis of the pump and motor shall be performed to insure that there are no frequencies of vibration that form harmonic resonance between them as a unit in operation. The vibration allowance in the units shall not exceed 4 mils at any point on the unit while running within 15 percent above or below the design point on the curve using the head or gpm for which the units have been designed to function.

C. Radial and thrust ball bearings shall be provided, which shall safely carry all radial and thrust loads. The bearings shall be of the antifriction, grease or oil lubricated, ball or roller type in a dustproof housing. The bearing frame shall be of rigid construction to support the shaft. Bearings shall have an ABMA L_{10} life of 100,000 hours.

D. Recirculation pump capacities shall be as specified herein and verified by the scrubber Manufacturer for proper flow rate and pressure as required for installation. Total installed power as specified in the Design Criteria shall be adhered to when selecting the recirculation pump motor horsepower. Pump sizing calculations shall be submitted to the Engineer for review.

E. All motors shall be chemical service, squirrel cage induction motors, NEMA Design B, TEFC enclosure, 1.15 SF, 460/230 volts, 60 hertz, 3-phase, conforming to Division 16 motor requirements.

F. Recirculation pumps shall be Vanton Sump-Gard or equal.

2.05 CHEMICAL FEED SYSTEM

A. The chemical feed system is to be designed for 25% sodium hydroxide and 12.5% sodium hypochlorite, and deliver the chemical solution to the spray nozzles where it is circulated through the packing media. The chemical feed system shall contain all piping and equipment necessary to deliver chemicals from storage tanks to the scrubber vessel.

B. Chemical Metering Pumps

1. The chemical metering pumps shall be positive displacement, peristaltic type complete with spring-loaded pumphead, self-contained variable speed drive, and flexible extruded tube as specified. The pumps shall deliver 25% sodium hydroxide and 12.5% sodium hypochlorite solution to the scrubber. All chemical metering pumps shall be suitable for 24 hour per day operation. There shall be one (1) sodium hydroxide metering pump dedicated to the first stage of the scrubber, and one (1) sodium hypochlorite metering pump and one (1) sodium hydroxide metering pump dedicated to the final stages of the scrubber.

2. Metering pump capacities shall be as specified herein and verified by the scrubber Manufacturer for proper flow rate and pressure as required for installation.

3. The metering pumps shall be dry self priming, capable of being run dry without damaging effects to pump or tube, and shall have a maximum suction lift capability of up to 30 feet vertical water column. The pump pressure rating shall be 30 psi.

4. The pump shall use no check valves or diaphragms and shall require no dynamic seals in contact with the pumped liquid. Process fluid shall be contained within pump tubing and shall not directly contact any rotary or metallic components. Flow shall be in the direction of the rotor rotation, which can be reversed and shall be proportional to rotor speed.

5. Pump materials shall be as follows:
   a. Track: Epoxy coated Mazak castings, Delrin hinges, Delrin tube clamps
   b. Rotor: Chrome plated Mazak castings, stainless steel collet and fittings, Nylatron rollers, Delrin guide rollers
   c. Guard: Polycarbonate
   d. Drive: Epoxy coated pressure cast aluminum
   e. Hardware: 316 stainless steel

6. Each pump shall be automatically shut off if a low level is sensed in the appropriate chemical tanks.

7. Each pump shall be suitable for exterior exposure and provided with a waterproof enclosure.

8. Tubing material and bore size shall be suitable for use with the scrubbing chemicals. One spare tube shall be provided for each metering pump.

9. Each metering pump shall be driven by a motor, capable of variable speed operation. Speed range for the sodium hydroxide metering pumps shall be 0.25 to 55 rpm, and speed range for the sodium hypochlorite metering pump shall be 1.0 to 220 rpm.

10. The sodium hypochlorite and sodium hydroxide metering pumps shall be Model 520DuN/R2 as manufactured by Watson Marlow, or equal.

C. Chemical Metering Pump Accessories

1. All metering pump accessories shall be provided by the metering pump Manufacturer.

2. Pressure Relief Valves
   a. Provide pressure relief valves in the discharge piping as shown on the Drawings.
   b. Pressure relief valve body shall be constructed of Type 316 stainless steel, Alloy 20, PVC, or other material resistant to the process chemicals and compatible with the operating pressures. Diaphragm shall be of Hypalon/PTFE construction.

c. Pressure relief valves shall have a built-in priming valve, fully adjustable setting via external screw, and piping connections of a size as to accommodate the pump discharge piping.

d. The valve shall be set at a relief pressure that is 90 percent of the maximum design discharge pressure.

3. Calibration Columns

a. Provide calibration columns in the suction piping as shown on the Drawings. Each calibration column shall be furnished with a valve and schedule 80 PVC or CPVC (as applicable) nipple for connection to the suction piping. Valves furnished shall be diaphragm valve for sodium hydroxide and sodium hypochlorite.

b. The capacities of the calibration columns shall be 2,000 cc.

4. Connection Tubing

a. If tubing is used for connecting pump to piping, tubing shall be constructed of flexible nylon as manufactured by Parker Hannifin Corp., or equal.

b. Fittings for use on tubing shall provide a tight leak proof seal without clamps or adjustments. Fitting shall have a ring for tube retention constructed of 302 stainless steel and a Nitrile O-Ring for a positive seal. Fittings shall be Fast & Tite as manufactured by Parker Hannifin Corp., or equal.

5. Sodium Hypochlorite Degassing Valves

a. Provide a degassing valve on the discharge side of the sodium hypochlorite metering pump as shown on the Drawings.

b. Degassing valve body shall be constructed of PVC or PVDF, or other material resistant to the process chemicals and compatible with the operating pressures. Diaphragm shall be of Hypalon/PTFE construction.

2.06 ACCESSORIES

A. Make-up Water Control: The direct reading rotameter shall be a variable area type with a Teflon float, EPR “O” rings, and PVC fittings. The rotameter shall be of the same size as the pipe in which it is installed. The rotameter shall have a direct reading scale.

B. Scrubber Recirculation Sump Blowdown and Level Controls: The scrubber shall be operated with a manual blowdown. The rate of blowdown shall be proportional to the rate of make-up water.

C. Differential Pressure Gauges: Two magnehelic type pressure gauges shall be provided to monitor pressure drop across the scrubber and the mist eliminator. Transparent overlays will be included. The Manufacturer shall be Dwyer.

D. Pressure Gauges: A liquid-filled pressure gauge, including an all plastic activator/isolator and an isolation valve, shall be provided for installation in the pump discharge piping. The gauge shall have a minimum dial size of 3½ inches. The gauge face shall indicate units of measurement and the normal operating reading shall be near the midpoint of the range.

E. Overflow Control: An overflow line equipped with an internal water seal shall maintain a minimum freeboard of four inches as measured from the maximum liquid level to the top of the scrubber sump deck.

2.07 PAINTING

A. All paint and coatings shall be shop applied in accordance with Section 09900 unless approved by the Engineer. Any painted surfaces that are damaged during handling, assembly, shipping, storage, and installation shall be cleaned, scraped back to soundly adhering paint, and repainted to equal the original painting received at the shop.

2.08 EQUIPMENT IDENTIFICATION

A. Each piece of equipment shall be provided with a substantial stainless steel nameplate, securely fastened in a conspicuous place and clearly inscribed with the Manufacturer's name, year of manufacture, serial number and principal rating data.

2.09 ELECTRICAL, INSTRUMENTATION AND CONTROLS

A. General:

1. Furnish a complete operating control system for local and automatic control of the Modular Odor Control Scrubber as specified in this section. The panel shall provide control for the supply and exhaust fans, recirculation pumps, and metering pumps.

2. Design: Modular Odor Control Scrubber manufacturer's PLC-based or relay/controller-based control and alarm system designed to function with the Modular Odor Control Scrubber, factory wired, and tested. Controls are to automatically start and stop system and permit manual operation at the panel as specified herein.
   a. If PLC based system is provided, PLC is to be Allen Bradley CompactLogix Model L32E (no "or equal" on this component.) with Allen Bradley PanelView Plus 1000 operator interface unit.

3. Install at the location shown on the Drawings.

4. Power Requirements: Control Panel (LCP) is to operate from a single 460-volt, 3-phase power source. Provide a main power supply disconnect circuit breaker rated 480 VAC, 65 kAIC.

5. Panels are to be tagged as shown on the Drawings.

6. All starters for the Modular Odor Control Scrubber equipment including variable speed drives for the metering pumps are to be located in the LCP.

7. All non 460 Volt loads are to be powered off an internal power transformer.

8. The panel and all components are to conform to Division 16 and 17 requirements in addition to applicable NEMA, U.L., National Electrical Code and NFPA requirements.

9. Provide a NEMA 4X 316 stainless steel terminal wiring box. All Modular Odor Control mounted equipment is to be wired to the junction box for connecting the remotely mounted control panel to the Modular Odor Control Scrubber. Provide a minimum of 15% spare terminals. Separate 460 volt wiring from 120 volt wiring and provide a separate terminal box for analog signal wiring.

B. Control Panel Enclosure:

1. Rating: NEMA 4X, 316 stainless steel.

2. Hinged outer door with continuous stainless steel hinge and stainless steel 3-point twist type latches.

3. Main power disconnect circuit breaker device, mechanically interlocked with door so that the main power must be “OFF” before door can be opened.

4. Stainless steel or copper-free aluminum back panel with provisions to mount control devices and terminal strip for field connections.

C. Control System Features:

1. Operator Controls and Indications: Provide the following operator controls and indications at the local control panel:
   a. Hand Switches:
      1) Control power ON/OFF.
      2) SYSTEM HAND-OFF-AUTO (H-O-A) control switch
      3) SYSTEM RESET Pushbutton
      4) RECIRCULATION PUMP #1 H-O-A control switch
      5) RECIRCULATION PUMP #2 H-O-A control switch
      6) METERING PUMP #1 H-O-A control switch
      7) METERING PUMP #2 H-O-A control switch
      8) METERING PUMP #3 H-O-A control switch
   b. Status Indication:
      1) Power ON
      2) Supply Fan ON
      3) Exhaust Fan ON
      4) Recirculation Pump #1 Running
      5) Recirculation Pump #2 Running
      6) Metering Pump #1 Running
      7) Metering Pump #2 Running
      8) Metering Pump #3 Running
      9) Sump 1 pH –digital display
      10) Sump 2/3 pH – digital display
      11) Sump 2/3 ORP – digital display
   c. Alarm Indication:
      1) Supply Fan Failure (amber)
      2) Exhaust Fan Failure (amber)
      3) Recirculation Pump #1 Failure (amber)
      4) Recirculation Pump #1 Failure (amber)
      5) Exhaust Fan High Vacuum (red)
      6) Low Chemical Tank Level – hypochlorite (red)
      7) Low Chemical Tank Level – sodium hydroxide (red)
      8) Stage 1 Sump Low Level (red)
      9) Stage 2/3 Sump Low Level (red)
      10) Stage 1 Sump pH Alarm (amber)
      11) Stage 2/3 Sump pH Alarm (amber)
      12) Stage 2/3 Sump ORP Alarm (amber)
   d. Adjustable Input Controls:
      1) Sump 1 pH setpoint

2) Sump 2/3 pH setpoint
3) Sump 2/3 ORP setpoint

2. Discrete Inputs to LCP: Provide for the following contact inputs to the control panel. Sensing voltage to be 120 VAC.
   a. From devices provided by this Section:
      1) Exhaust Fan High Vacuum switch
      2) Stage 1 Sump Low Level
      3) Stage 2/3 Sump Low Level
      4) Recirculation Pump #1 Running (motor starter auxiliary contact)
      5) Recirculation Pump #2 Running (motor starter auxiliary contact)
      6) Metering Pump #1 Running
      7) Metering Pump #2 Running
      8) Metering Pump #3 Running
   b. From Field Devices provided by other Sections:
      1) Exhaust Fan Running (motor starter auxiliary contact)
      2) Supply Fan Running (motor starter auxiliary contact)
      3) Low Chemical Tank Level – hypochlorite (from ultrasonic level transmitter via Pump Station Main Control Panel PLC)
      4) Low Chemical Tank Level – sodium hydroxide (from ultrasonic level transmitter via Pump Station Main Control Panel PLC)
      5) Carbon Odor Control System Trouble

3. Analog Inputs to the LCP from Field Devices provided by other Sections:
   a. None

4. Analog Inputs to the LCP from Field Devices provided by this Section:
   a. Sump 1 pH.
   b. Sump 2/3 pH
   c. Sump 2/3 ORP

5. Discrete Outputs from the LCP: Provide the following maintained contact outputs that are to be used for monitoring or control purposes.
   a. Modular Odor Control Scrubber Running
   b. Common Failure Alarm

6. Elapsed Time Meter: Include six-digit non-resettable electromechanical counter with units in hours.

7. Provide independent pH control loops for each sump.

8. Provide ORP control loop for sump 2/3.

9. Controllers (if used): The controllers shall have a digital display, menu driven operation for easy calibration and setpoint adjustment, and provide a 4-20 mA output. Controllers shall be Great Lakes Model R63 or equal.

10. Electronic Indicators (if used): Electronic indicators shall be 3.5 or 6 digit, as appropriate, with 0.56” high red LED display. Indicators shall be provided with nameplate and scale calibrated to match the calibration of the primary element. The unit shall be designed primarily for use with 4-20 mA current loop signal circuits. Indicator operating voltage shall be 115 VAC 10%, 60 Hz. Indicator controls shall include three (3) front-panel pushbuttons for modifying alarm values and other

indicator setup. Two (2) form-C relays shall be provided for each indicator. Relay contact outputs shall be rated 5A, 120/240 VAC, resistive load. Indicators shall be Red Lion Model IMP or APLCL, or equal.

D. Control System Operation:

1. When the local HAND-OFF-AUTO switch is in OFF, the Modular Odor Control Scrubber shall not run regardless of other run commands.

2. When the local switch is the HAND position, the Modular Odor Control Scrubber is to run.

3. When the local switch is in the AUTO, the Local Control Panel controls the Modular Odor Control Scrubber based on the inputs from field devices or discrete inputs:
   a. The low level sump switch is to shut off the recirculation pump and chemical metering pump associated with the sump and provide an alarm.
   b. The pH control loop for each sump is to accept the 4-20 mA control signal from the pH meters and provide 4-20 mA outputs to the associated sodium hydroxide metering pumps to maintain the pH setpoint.
   c. The ORP control loop for sump 2/3 is to accept a 4-20 mA control signal from the ORP meter and provide a 4-20 mA output signal to the sodium hypochlorite metering pump to maintain the ORP setpoint.
   d. Upon receiving a low chemical storage tank level, the control system is to stop the associated metering pump(s) from operating and provide an alarm.
   e. When a HIGH vacuum condition exists on the exhaust fan, the Modular Odor Control Scrubber is to shut down. The Fan High Vacuum pilot light is to be illuminated on the LCP and the Common Trouble Alarm is to be activated.
   f. If a fan is required to run and the LCP doesn't receive a fan running contact from the motor starter within a preset period of time, then the "Fan Failure" pilot light on the LCP is to illuminate and the Common Trouble Alarm is to be activated.
   g. If a fan should fail during operation, the system is to shut down the Modular Odor Control Scrubber, illuminate the "Fan Failure" pilot light, and activate the Common Trouble Alarm.

4. All alarm conditions are to latch and require that the RESET button on the LCP be pressed to reset the system.

5. Upon loss of power, system control is to reset and restart the system based on control inputs.

E. Field Control Equipment:

1. pH Element/Transmitter: Per Division 17 requirements.

2. ORP Element/Transmitter: Per Division 17 requirements.

3. Differential Pressure Indicators/Switch:
   a. General: Furnish and install differential pressure switch/gauges for indicating the pressure differential across the mist eliminator, the carbon bed, and for vacuum on fan suction.
   b. Construction:

1) Size: 4-1/2” nominal dial size;
2) Movement: Silicone rubber diaphragm with isolated magnetic helix;
3) Housing: Die cast aluminum, Teflon impregnated anodized
4) Window: Polycarbonate plastic, dust-tight;
5) Connection: ¼” NPT;
6) Pointer: Black, adjustable needle;

c. Switch:
1) Type: Two form C DPDT relays
2) Electrical Rating: 10A @ 120 V AC
3) Deadband: Maximum 1 percent of full scale.
4) Repeatability: ±1% of full scale.

d. Accuracy: ±3% of full scale.

e. Switches for high and low setpoint are to be adjustable from knobs on gauge face.

f. Scale Range: As required for equipment.

g. Enclosure: Differential pressure indicators are to be flush mounted in individual NEMA 4X non-metallic enclosures. Make external connections with S.S. bulkhead fittings. Internal connections to be made with flexible ¼” ID, braid reinforced, high purity, silicone tubing that is UV and ozone resistant with a operating temperature range of -85 to 350°F. (Available from RyanHerco)

h. Manufacturer: Dwyer Series A3000 Photohelic Differential Pressure Gauge, or equal.

4. Level Switch: Modular Odor Control Scrubber manufacturer’s standard switch designed for the intended service and corrosion resistant construction.

F. Electrical Components and Accessories:

1. General: Furnish and install all necessary electrical components, including all conduit, wiring, and terminations for a complete, functional system.

2. Motor Starters: Full voltage, combination type, non-reversing starter with overload relays, control power transformers, reset push-buttons, circuit breaker through-the-panel operators for each motor. Motor starters to be NEMA size 1 (minimum). The magnetic starter to be of the heaterless design and provide phase loss protection, short circuit self-protection and provide thermal memory. The solid-state overload to be self-powered.

3. Control power transformer to be sized for anticipated loads from devices/controls.

4. Relays: Per Division 16 requirements.

5. Pilot devices to be 30.5 mm heavy-duty nonmetallic NEMA 4X, Square D, Class 9001, Type SK or equal.

6. Pushbuttons to be extended guard type. Pushbuttons and selector switches shall be non-illuminated.

7. Pilot lights to be LED type. Pilot light lens colors shall be as follows:

Red “Run”, “On”, “Open”
Green “Off”, “Closed”

Amber "Alarm", "Fail"
White "Control Power On"

8. Conduits:
   a. Schedule 80 PVC between control panel and metering pumps or devices.
   b. Liquid-tight, PVC-coated, non-metallic, flex between fixed conduit and metering pumps and field devices.

9. Wiring (Inside Panels):
   a. Control wiring stranded copper, minimum #14 AWG.
   b. Power wiring stranded copper, minimum #12 AWG.
   c. Insulation dual-rated for type THHN and THWN applications.
   d. Power terminals lug-type, 600 V minimum rated, with separate bare copper ground lugs for incoming and pump ground wires.
   e. Control terminals screw type, 300 V minimum rated, with minimum 10% or 6 spare terminals (whichever is greater).
   f. External control wiring terminations to be vinyl-insulated crimp connectors with spade lugs.
   g. Separate analog wiring by at least 6 inches from any AC power and control wiring.
   h. Enclose wiring in sheet metal raceways or plastic wiring ducts.

10. Identification:
   a. Provide legend plates as follows:
      1) Pilot Devices - Aluminum with black background and white letters, mechanically attached with pilot device.
      2) Controlled Device – 1" wide black plastic with 3/8" white engraved lettering, attached with stainless steel screws or epoxy.
      3) Control Panel – 1" wide black plastic with 3/8" engraved white lettering, attached to exterior door with stainless steel screws or epoxy.
   b. Tag all instruments mounted behind panel with embossed plastic tape labels.
   c. Wire Identification:
      1) Wire Tags: Snap-on or slip-on PVC wire markers with legible machine printed markings and numbers. Do not use adhesive or taped-on tags.
      2) Numbered and tagged at each termination.

2.10 TOOLS, SUPPLIES, AND SPARE PARTS

A. Furnish all special tools (one set per like piece of equipment) necessary to disassemble, service, repair, and adjust the equipment.

B. All spare parts furnished with the equipment are to be painted or coated as required in Section 09900. Where no painting or protective coatings are specified, suitable provisions are to be made to protect against corrosion.

C. All spare parts are to be identical and interchangeable with the original parts and are to be furnished in clearly identifiable and labeled containers.

D. Provide all spare parts as recommended by the by the various equipment manufacturers. Include the following at a minimum:

- One (1) set of gaskets for all gasketed covers and connections.
- One (1) set of spray nozzles
- One (1) set of internal bolts and fasteners for wetted service
- Ten percent (10%) extra scrubber packing;
- One (1) spare motor for the recirculation pumps.
- One (1) spare metering pump;
- One (1) spare peristaltic tube for each metering pump;
- Two (2) spare pH probes.
- Two (2) spare ORP probes.
- Three (3) injection check valves.
- One impeller tool for the recirculation pumps.

E. All of these materials are to be properly packed, labeled and stored where directed by the Owner.

PART 3 -- INSTALLATION

3.01 QUALITY ASSURANCE

A. Inspection and Testing Requirements: The Engineer reserves the right to reject delivery of any or all pieces of equipment found, upon inspection, to have any or all of the following: blisters, chips, crazing, exposed glass, cracks burned areas, dry spots, foreign matter, surface porosity, sharp discontinuity or entrapped air at the surface of the laminate. Any item which does not satisfy the tolerances as below shall be rejected:

Defect	**Inside Surface**	**Outside Surface**
Blister	None	Max. dimensions: 1/4” diameter by 1/8” high; Max density: 1 per sq. ft.; Min. separation: 2” apart
Chips	None	Max. dimension of break: 1/4” and thickness no greater than 10% of wall thickness; Max. density: 1 per sq. ft.
Crazing	None	Max. length-. ½”; Max. density: 5 per sq. ft.; Min. separation: 2”
Cracks	None	None
Exposed Glass	None	None
Scratches	None	Max. length: 1”; Max. depth: 0.010”
Burned Areas	None	None
Surface Porosity	None	None
Foreign Matter	None	None
Sharp Discontinuity	None	None
Pits	Max. 1/8”, dia. By 1/32” deep; Max: 10 per sq. ft.	Max. 1/8” dia. By 1/16” deep; Max: 10 per sq. ft.
Dry Spot	None	2sq. in. per sq. ft.
Entrapped Air	None at the surface 1/16 inches and max 10 per square in.	Max 1/8” and 4 per sq. in. or 1/16” and 10 per sq. in. with laminate

B. The Engineer reserves the right to be present at the fabricators facility for visual inspection of equipment to be supplied.

3.02 INSTALLATION

A. All equipment shall be assembled and shipped so that field assembly will be minimized and installation can be completed with little or no field fabrication.

B. Install the equipment in accordance with the Manufacturer's drawings and instructions.

C. Lubricate all equipment and make ready for operation.

D. Upon completion of the installation, each piece of equipment and each system is to be tested for satisfactory operation without excessive noise, vibration, overheating, etc. Compliance shall be based on the equipment manufacturer's specifications and all applicable costs to meet those standards shall be borne by the Contractor. All equipment must be adjusted and checked for misalignment, clearances, supports, and adherence to safety standards.

3.03 MANUFACTURER'S FIELD SERVICES

A. Provide the services of a qualified manufacturer's technical representative in accordance with Section 11000, Equipment General Provisions. Field services shall include the following site visits:

Service	**Number of Trips**	**Number of Days/Trip**
Installation and Testing	1	2
Startup and Training	1	2
Services after Startup (Field Acceptance Test)	1	1

3.04 FIELD ACCEPTANCE TESTS

A. Field acceptance tests are required for the Modular Odor Control Scrubber specified herein within 12 months of delivery of the equipment. Functional Testing is to include the mechanical tests and performance tests as specified below. Submit information which fully describes the Manufacturer's testing procedure. Provide at least ten days' notice of such tests. Engineer will witness the acceptance tests. In case of failure of any unit to meet the test requirements, make alterations as necessary, and repeat the tests at no additional cost to the Owner until the equipment is satisfactory. Submit certified report of successful field acceptance and mechanical tests.

B. Mechanical Test - The entire scrubber system with other associated equipment such as fans, recirculation pumps and metering pumps, piping and controls are to be mechanically tested for at least 4 hours after initial installation. Test is to be made with recirculation scrubber liquid and airflow being introduced at the design flow rates. All equipment is to be mechanically sound, show no evidence of liquid or gas leaks, have no undue vibrations and generally be structurally rigid when being tested.

C. Performance Test - Field test the scrubber to demonstrate compliance with the design conditions of service. Removal of hydrogen sulfide from the inlet air stream must be greater than or equal to 99.5 percent of the inlet hydrogen sulfide concentration at all inlet concentrations of hydrogen sulfide.

1. Furnish the following items for testing:

a. Sufficient quantity of H_2S gas.
b. Portable manometer: 0 to 12-inches water, for differential pressure loss across scrubber system.
c. Air velocity meter with pitot tube: 200-600 fpm, for airflow through scrubber.
d. H_2S Analyzer: The inlet H_2S concentrations are to be measured using an Interscan 1170 with continuous data recording or equal. The exhaust concentrations are to be measured by a Jerome 631-X with continuous data recording or equal..
e. All water, power, and chemicals required for the tests.
f. All labor and equipment Manufacturer's field engineer for conducting the tests.

2. Test Procedures:
   a. Each series of tests is to be conducted with a fixed quantity of chemical or chemicals, sufficient for the testing protocol specified below.. Bottled H_2S gas is to be continuously fed into the inlet airstream to meet to achieve the following H_2S concentrations:
      1) Two hours at an inlet H_2S concentration of 5 ppm(v)
      2) Two hours at an inlet H_2S concentration of 15 ppm(v)
   b. Make provisions to ensure complete mixing of H_2S gas with the inlet air. Prior to commencing recording exhaust concentration, the system should be allowed to reach concentration equilibrium. Inlet and exhaust H_2S concentrations are to be continuously monitored and recorded using the analyzers as specified above.
   c. In addition to monitoring and recording inlet and exhaust H_2S concentrations, the following data shall be recorded at 15 minute intervals:
      1) Air flow rate
      2) ORP and pH in each stage
      3) Pressure drop
      4) Chlorine residual in each sump

D. Conduct a second performance test with the foul air exhausted from the pump station to verify performance under actual field conditions during the first August after system start-up. Test procedures are to be identical to those outlined in Paragraph 3.04 C. 2. above, with the exception that inlet hydrogen sulfide measurements are to be sampled from the pump station exhaust air without the addition of bottled gas.

E. Re-examine the scrubber packing bed level at least one month after startup and add additional packing to compensate for any settling of the bed.

F. Manufacturer's representative witnessing the field tests is to furnish the Owner, through the Engineer, a written report certifying that the scrubber unit:

1. Has been properly installed and accurately aligned.

2. Is free from any undue stress imposed by connecting piping and/or anchor bolts.

3. Has been operating under full load and reduced loads and that the scrubber operates satisfactorily.

4. The Contractor has accurately recorded the data obtained during the field test.

– END OF SECTION –

SECTION 13253

CARBON ODOR CONTROL SYSTEM & ACCESSORIES

PART 1 – GENERAL

1.01 THE REQUIREMENT

A. Furnish, install, test, paint, adjust, and place in satisfactory operation a complete carbon odor control system at the location shown on the Drawings and as specified herein.

1.02 REFERENCE SPECIFICATIONS, CODES AND STANDARDS

A. U.S. Department of Commerce Voluntary Product Standard PS-15-69.

B. ASTM C581 – Chemical Resistance of Thermosetting Resins used in Glass Fiber Reinforced Structures

C. ASTM C582 – Reinforced Plastic Laminates for Self-Supporting Structures in a Chemical Environment

D. ASTM D3299 – Filament Wound Reinforced Polyester Chemical-Resistant Tanks

E. ASTM D4097 – Contact Molded Glass Fiber Reinforced Thermoset Resin Chemical-Resistant Tanks

1.03 SUBMITTALS

A. In addition to the submittal requirements specified in Section 01300, Submittals, submit the following:

1. Manufacturer's literature, illustrations, specifications and engineering data including dimensions, materials, size and weight of all components and complete assembly.

2. Drawings showing plans and sections of the equipment to demonstrate proper coordination between components, fabrication methods, assembly and accessories.

3. Detailed calculations confirming the structural integrity of the vessel under full water loading conditions.

4. Complete erection, installation, and adjustment instructions and recommendations.

5. Complete electrical schematic wiring diagram drawings.

6. Operation and Maintenance Instructions.

7. Performance Affidavit.

1.04 CONTRACTOR'S RESPONSIBILITY

A. The Contractor shall be responsible for coordination of the design, fabrication, and

installation of the odor control system shown on the Drawings and specified herein.

B. The Contractor shall coordinate and review installation procedures under other Sections and coordinate the installation of items that must be installed to comply with the requirements of the Work specified under this Section.

C. The services of the manufacturer's representative shall be provided for a period of not less than three (3) days as follows:

1. At least one trip of one (1) day to check and supervise the installation of the equipment,.

2. One trip of not less than one (1) day to perform the equipment performance testing.

3. One trip of one (1) day after performance testing to supervise initial start-up and operation. Manufacturer shall coordinate start-up activities so that operations personnel can observe and instruct the Owner's personnel in proper operation and maintenance of the equipment.

D. Any additional time required to achieve successful installation and operation shall be at the expense of the Contractor.

E. A written report covering the representative's findings and installation approval shall be submitted to the Engineer covering all inspection and outlining in detail any deficiencies noted.

F. The times specified are exclusive of travel time to and from the facility and shall not be construed as to relieve the manufacturer of any additional visits to provide sufficient service to place the equipment in satisfactory operation.

1.05 WARRANTY

A. The carbon reactor vessels shall be warranted for a period of five (5) years.

PART 2 -- MATERIALS

2.01 ACCEPTABLE MANUFACTURERS

A. Subject to compliance with the requirements of this Section, the following manufacturers have the capability of performing the work in this Section:

1. Calgon Carbon Corporation,

2. Bay Products, Inc.,

3. Or Pre-Approved Equal.

B. The naming of a manufacturer in this Section is not an indication that the manufacturer's standard equipment is acceptable in lieu of the specified component features. Naming is only an indication that the manufacturer may have the capability of engineering and supplying a system as specified.

C. The odor control system manufacturer shall be experienced in the design, construction and successful operation of carbon type scrubber systems designed to remove hydrogen sulfide and associated sewage odors from ventilated air. The odor control system manufacturer shall have a minimum of and show evidence of at least five (5) installations in satisfactory operation for at least three (3) years in the United States. The manufacturer shall have at least one radial flow system in operation of greater than 10,000 cfm. Within one month after the Notice to Proceed and prior to submission of Shop Drawings, the odor control system manufacturer is to submit records and data to demonstrate his experience and qualifications.

2.02 OVERALL SYSTEM REQUIREMENTS

A. The odor control system is to consist of the principal components listed below along with any associated appurtenances required for a complete and operational system.

1. System 1
   a. One (1) annular carbon reactor vessel;
   b. Activated Carbon;
   c. Grease Filter/Mist Eliminator;
   d. Flow control dampers.
   e. Instrumentation and Controls:
      1) Hydrogen Sulfide Carbon Saturation Indicators.
      2) Pressure Gauges.
      3) Pressure Differential Switches.
      4) Control Panel.

B. All materials shall be new and suitable for the service to which they are subjected.

C. Sizes and capacities of equipment components specified establish minimum requirements only, and do not relieve the equipment supplier of responsibility for providing a properly functioning system.

D. The carbon reactor vessels is to be designed to remove hydrogen sulfide and associated sewage odors from the foul air stream by adsorption to the carbon media.

E. Operating Conditions – Odor Control Systems

Number of Units:	1
Type:	Carbon Annular Flow, Modular
Vessel Diameter (feet):	12
Vessel Height (feet):	14
Air Flow Rate (scfm):	24,000
Inlet Temperature,(F)	90
Relative Humidity	100%
Carbon Capacity, Minimum (lbs):	20,150
Air Velocity through scrubber (Average between the inside and outside retaining screens), Maximum (fpm)	75
Inlet H_2S Concentration, Average (ppm):	0.5
Removal Efficiency, Minimum:	99.0%
Maximum Pressure Drop through Vessel (inches W.C.):	9.5
Overflow Connection Size (inches):	3
Supply and Drain Connection Size (inches):	2

2.03 VESSEL CONSTRUCTION

A. The odor control vessel shall be manufactured of either fiberglass reinforced plastic (FRP) or polypropylene in accordance with these specifications. All integrally molded connections shall be manufactured of the same material.

B. Design vessel using a minimum structural safety factor of 10 to 1 for pressure and 5 to 1 for vacuum. The vessel is to be designed with bottom knuckle reinforcement (if applicable) and for hydrostatic head load to the top of the vessel.

C. Vessel housings shall be designed for full bottom support and shall be provided with hold-down lugs integrally molded into the walls of the vessel. All hold down lugs shall be designed to account for all anticipated loads and shall comply with local code requirements. Furnish all anchor bolts, nuts and washers which shall be Type 316 stainless steel.

D. Fiberglass Reinforced Plastic (FRP) Vessel Construction:

1. Vessels shall be either contact-molded in accordance with ASTM D4097, Grade I, or Type I, Filament-Wound in accordance with ASTM D3299-88, Grade 1. Portions of the vessel, including joints and duct connections shall be fabricated by contact molding. Contact molded laminates shall be in accordance with ASTM C582, Table 1.

2. All laminate physical properties shall comply with requirements for laminate thickness of 3/8 inch and thicker. Laminate physical properties shall be as follows:

Ultimate Tensile Strength (min. PSI) ASTM Method D638	15,000
Modulus of Elasticity Procedure A of ASTM Method D790	10 x 10^5
Flexural Strength – (min. PSI) ASTM Method D790	22,000
Compressive Edge Strength (min. PSI) ASTM Method D699	20,000
Average Glass Content of Completed Tanks by Ignition (%)	45

3. Resins:
   a. Resins used in laminate shall be premium corrosion resistant and fire retardant brominated bisphenol A vinylester resins to achieve a 25 or less flame spread rating in accordance with NFPA 91.
      1) Resin shall be Hetron 992 FR with 3 percent antimony trioxide, as manufactured by Ashland Chemical Company, DeraKane 510A or 510C with 5 percent antimony trioxide, as manufactured by Dow Chemical Company, Dion 9300 FR with 5 percent antimony trioxide, as manufactured by Reichold, or approved equal.
      2) All cut edges shall be sealed with a resin coating of the same resin as used in the fabrication. The resin shall contain paraffin.

4. Reinforcement:
   a. Synthetic surfacing veil shall be Veil-Nexus 1012 (apertured) as manufactured by Burlington Industries.
   b. Chopped strand mat shall be Type E glass, minimum 1-1/2 ounces per square foot, with silane finish and styrene soluble binder.
   c. Continuous roving used in chopped gun shall be Type E glass.
   d. Woven roving shall be Type E glass, nominal 24 ounces per square yard, with a 4 by 5 weave and a silane type finish.

e. Continuous roving used for filament winding shall be Type E glass, nominal 110 strand yards per pound, with a silane type finish.

5. Laminates:
   a. Laminates shall consist of a corrosion resistant resin-rich inner surface, an interior corrosion barrier, an interior structural layer and an exterior layer. Composition specified for inner surface and interior corrosion barrier is intended to achieve optimum chemical resistance.
   b. Corrosion resistant resin-rich inner surface shall be reinforced using a single apertured Nexus synthetic veil. Minimum resin-rich inner surface thickness shall be 10-20 mils. Thixotropic agents shall not be used for this service. Glass content of resin-rich inner surface shall be 10 percent plus or minus 5 percent by weight.
   c. Interior corrosion barrier shall be a minimum of 100 mils of Type E chopped strand mat to a total of 3 oz/sq. ft. The interior corrosion barrier shall be applied by either the hand laid up technique, filament winding or chopper gun. Chopper gun is only permitted if an automated process is used. Manual operation of chopper gun shall not be permitted. Glass content of interior corrosion barrier shall be 25 percent plus or minus 5 percent by weight.
   d. Interior structural layer shall be of sufficient thickness to meet minimum thickness requirements as specified. Glass reinforcements shall be in accordance with the appropriate standards of construction. Interior structural layer shall be fabricated using either the hand lay up, filament wound technique or approved chopper gun technique. Glass content of interior structural layer shall be 60 percent plus or minus 5 percent by weight. In no case shall the total thickness of the interior structural layer be less than 0.50 inches.
   e. Exterior layer shall be reinforced using a single “A” glass veil with a layer of surfacing “Nexus” veil followed by a clear resin rich 10 mil thick coating similar to the inner surface. Topcoat shall be pigmented parafinated gel-coat with ultraviolet inhibitors. The pigmentation shall be beige. There shall be no glass fibers exposed.
   f. Vessel wall shall be reinforced around all openings and connections.

6. Curing: Each vessel shall be given a BPO-DMA cure system to increase service life. In addition, interior of vessel shall be post-cured. Post cure shall consist of a FRP vessel wall cure temperature of at least 180ºF for a minimum of 4 hours. Independent of exterior ambient fabrication shop temperature, the temperature inside the vessel may have to be elevated above 180ºF. At no time shall the vessel wall temperature approach 90 percent of the thermal distortion temperature for the resin used. Barcol readings taken after the post-cure shall not be greater than 4 points less than the resin manufacturers published Barcol readings and in no case less than 35. Where steam is used in the post-cure, no steam shall impinge on the interior surface of the vessel or the inside of any nozzle. A stream sparge pipe projecting at least 12 inches beyond the interior surface of any nozzle and 12 inches away from any wall shall be used. During steam post-curing, the vessel shall be maintained at atmospheric pressure. Alternate curing methods may be submitted for the Engineer’s approval. Cobalt compounds shall not be used to accelerate curing of the FRP in any way.

E. Polypropylene Vessel Construction:

1. The vessel shall be manufactured of UV and impact resistant polypropylene sheets

and shaped to form a watertight vessel.

2. Polypropylene material shall be Acctuf 3045 Copolymer polypropylene as manufactured by BP Amoco Polymers Inc. The polypropylene shall be virgin material and contain no fillers. All plastic shall contain an ultraviolet stabilizer at a level adequate to give protection for the intended service life of the vessel, minimum of 0.25%. This stabilizer shall be compounded in the polypropylene. Pigments must be compounded at the same time of the resin manufacture.

3. The polypropylene shall have the following properties:

Property	**Value**	**Units**	**ASTM Specification**
Density	55.3 –57.89	$\#/ft^3$	D1505
Hardness, Rockwell R	75		D785
Izod Impact Strength	No Break		D256 (1/8" bar)
Tensile Strength, Yield	3,920	psi	D638
Flexural Modulus	194	psi	D790A
Flammability	1 (HB)		Per UL 94

4. Vessel Construction
   a. Design Parameters:
      1) Hoop Stress. The vessels shall be designed with a hoop stress value no greater than 600 psi at 100˚F with a safety factor of no less than 2, using the Barlow Formula for calculating wall thickness.
      2) Wall Thickness. The minimum required wall thickness of the cylindrical shell at any fluid level shall be determined by the Barlow Formula. The wall thickness shall be based on the maximum temperature of the service.
   b. Sheets of polypropylene are to be fabricated together to form the shell of the vessel using heated tool fusion butt welding. Polypropylene shapes are to be added to strengthen and stiffen the shell using hot-gas extrusion welding. Only small appurtenances are to be added to the vessel using hot-gas hand welding. All welders are to be qualified per DVS 2205 and ASTM C1147.
   c. The polypropylene vessel shall be manufactured in accordance with German Standard DVS 2205.
   d. Cut Edges. All edges where openings are cut into the vessel shall be trimmed smooth.
   e. Appearance. Type 1 finished vessel walls shall be free, as commercially practicable of visual defects such as foreign inclusions, air bubbles, pinholes, pimples, crazing, cracking and delaminations that will impair the serviceability of the vessel.
   f. Dimensions and Tolerance. The vessel diameter shall be measured externally. The tolerances on the outside diameter, including out of roundness, shall be plus or minus 1 percent. Measurement shall be taken in a vertical position.

2.04 ANNULAR CARBON REACTOR VESSEL

A. The reactor vessel shall be designed such that odorous air enters through the outside surface of the annular carbon bed (via an air inlet in the vessel sidewall), is processed through the carbon bed, and exits through the center top outlet.

B. The reactor vessel design shall be capable of processing odorous air at such a velocity that the empty bed contact time (EBCT) across the activated carbon bed shall not be less than 1.25 seconds.

C. The reactor vessel shall be designed such that personnel entry into the reactor vessel for the purposes of loading, leveling and unloading the activated carbon media is not required. All access hatches shall be designed to withstand all expected stresses and shall be corrosion resistant to acidic and basic cleaning solutions. Access hatches shall be removable, corrosion resistant panels, all Type 316 stainless steel hardware including nuts, washers, bolts and extruded silicon gaskets.

D. The unit shall have the following standard features:

1. Inlet: ANSI 150 flanged nozzle, 42 inches O.D.

2. Plain end nozzle, 42 inches O.D.

E. Carbon Support System

1. The support system for the carbon bed shall be as recommended by the odor control vessels supplier and approved by the Engineer. The carbon bed shall be supported by a polypropylene screen basket resting on a support system. The carbon bed screen and support system shall be removable through access manways. The support system shall be a system capable of withstanding a load of not less than 300 pounds/square foot with a deflection not greater than ¼ inch under any operating condition. All components of the support system shall be constructed of materials resistant to the chemical service conditions specified for corrosion. Pall rings or dump packing shall not be used to support the carbon beds.

2. Carbon Basket: A fully seamed polypropylene screen sewn basket shall be provided to hold the activated carbon without fraying. All edges and seams shall have “piping” to reinforce the seams and edges to prevent fraying. The basket shall be of sufficient strength to hold the carbon without tearing.

2.05 ODOR CONTROL SYSTEM ACCESSORIES

A. The odor control system manufacturer shall provide the following appurtenances for each odor control system.

B. All necessary connections for piping, instrumentation, sampling, and ductwork shall be provided as shown on the Drawings. Suitable EPDM gaskets shall be provided. The following appurtenances shall be provided with the vessel:

1. Drain and fill assembly, sized as scheduled herein, with Schedule 80 CPVC ball valve and overflow drain line, with threaded coupling and plug.

2. Carbon adsorption unit manufacturer shall provide factory mounted pipe supports for outlet air sample ports, bottom drain connection, and overflow piping.

3. Flanges for air inlet and outlet shall be manufactured to conform to NBS-PS 15-69, standard dimensions for bolting, but in no case shall the thickness be less than ¾-inch

thick. Flange nozzles for piping connections shall conform to ASTM D 3299, all nozzles up to and including 8 inch diameter shall be reinforced with blade type gussets. Flanges for piping connections shall be ANSI 150-lb dimensions. All flanges shall be pre-drilled. Flanges shall be checked for alignment, thickness and mating prior to shipment to field. Area on the back of all flanges around each bolt hole shall be the diameter of a standard washer and shall be flat and parallel to flange face. This area shall be spot faced, if necessary, to meet this requirement.

C. Hydrogen Sulfide Saturation Monitors: The system shall be furnished with 4 hydrogen sulfide saturation monitors capable of visual detection of H_2S breakthrough. One monitor shall be installed in the exhaust duct of the vessel. The remaining monitors shall be installed at varying depths (radial) into the carbon media. The monitors shall have replaceable tubes and be able to be removed from the vessel. Monitors shall be as manufactured by Calgon Carbon Corp, General Carbon, Inc. or equal.

D. Vessel grounding system, subject to Engineer's approval. Manufacturer shall supply adequate details to demonstrate that the carbon bed will be adequately electrically grounded.

E. Lifting Lugs: Lifting lugs shall be capable of withstanding weight of the empty vessel with a minimum safety factor of 5 to 1. A minimum of three lugs shall be furnished per vessel.

Comment [cvh1]: Brian

F. Mounting Lugs: Provide mounting lugs suitable for mounting electrical junction boxes as shown on the Drawings.

Comment [cvh2]: Brian

G. Carbon reactor exhaust stack and any other transition pieces required shall be fiberglass, reinforced vinyl ester and furnished by the odor control system manufacturer.

H. Carbon Sampling Device: One grain thief sampling device shall be provided for each odor control unit. The device shall be a Fisher Scientific Model 14-208, or equal.

I. Rain Cap: One (1) FRP or polyethylene rain tee with bird screen

J. Expansion Joint: One (1) Silicone flexible boot, minimum 1/8-inch wall thickness.

2.06 ACTIVATED CARBON

A. The activated carbon product shall be Centaur HSV type carbon, as manufactured by Calgon Carbon Corporation, or equal.

B. Sufficient activated carbon shall be provided to fill the reactor vessel to the height of the vessel. The activated carbon shall be virgin granular activated carbon, derived from bituminous coal. The activated carbon shall be suitable for the vapor phase adsorption of sewage treatment odors. No chemical impregnation of the carbon is permitted.

C. The activated carbon shall have the following specifications:

Iodine Number, mg/g	800, Minimum
Butane Activity, weight %	15.6, Minimum
Ash, weight %	7, Maximum
Moisture, weight % as packed	4, Maximum
Hardness Number	97, Minimum
Apparent Density, g/mL	0.56, Maximum

Mean Particle Diameter, mm	3.7, Minimum
H_2S Breakthrough Capacity, g H_2S removed/cc Carbon[1]	0.09, Minimum
Ultimate H_2S Capacity, g H_2S removed/cc Carbon[2]	0.6, Minimum

[1] The determination of H_2S breakthrough capacity will be made by passing a moist (85% R.H.) air stream containing 1% H_2S at a rate of 1,450 cc/min through a 1 inch diameter by 9 inch deep bed of uniformly packed activated carbon and monitored to 50 ppm breakthrough.

[2] Ultimate H_2S capacity shall be based on a minimum of 10 regenerations using clean water

D. The carbon supplied shall be of a type that does not require chemicals to be regenerated in place. Carbons that require hydroxide, permanganate, chlorine, organic, or other solutions, except clean water to regenerate the material will not be accepted.

2.07 GREASE FILTER/MIST ELIMINATOR

A. The odor control system manufacturer shall provide one (1) grease filter/mist eliminator for each odor control system as manufactured by Calgon Carbon Corporation, Bay Products Inc., or equal.

B. At the design gas flow rate, the external grease filter/mist eliminator shall remove a minimum of 99.9% of droplets 10 microns and larger and a minimum of 90% of droplets between 5 microns and 10 microns.

C. Pressure drop through the grease filter/mist eliminator shall not exceed 1.0 inches W.C. at 24,000 cfm.

D. Construction

1. External grease filter/mist eliminator shall contain a horizontal grease filter and mist eliminator constructed of PVC with 316 stainless steel or FRP frames. Provide two nested modules suitable for operation at the design gas flow rate for each scrubber system.

2. The grease filter/mist eliminator shall be enclosed in a FRP housing. The housing shall be of hand lay-up construction with the same resins and reinforcements as specified for the odor control vessel. Minimum thickness of the housing shall be 0.5 inches. The FRP shall be pigmented the same color as the odor control vessel. The housing section coming in contact with the pad assemblies shall have a high-density polyethylene liner to prevent damage to the FRP corrosion liner during pad removal and installation.

3. The grease filter pad shall be 2 inches thick and constructed of woven 304L stainless steel.

4. The mist eliminator pad shall be 4 inches thick and constructed of woven polypropylene.

5. Provide a side mounted module access cover.

6. Gas inlet and outlet connections shall be circular, flanged connections the same size as the connecting ductwork. Flanges shall be of hand lay-up construction in accordance with NBS PS 15-69 and shall be ANSI 16.5, 150 lb.

7. Provide a flanged, ¾ inch diameter drain connection at the bottom of the FRP housing w/ a ¾ inch PVC ball valve.

2.08 CONTROLS

A. General:

1. Furnish a Local Control Panel (LCP) for monitoring the operation of the Carbon Odor Control System as specified in this section.

2. Design: Relay based monitoring system, factory wired, and tested.

3. Install at the location shown on the Drawings.

4. Power Requirements: Each Local Control Panel (LCP) to operate from a single 120-volt, single-phase power source.

5. Panel is to be tagged as shown on the Drawings.

6. The panel and all components are to conform to Division 16 and 17 requirements in addition to applicable NEMA, U.L., National Electrical Code and NFPA requirements.

B. Control Panel Enclosure:

1. Rating: NEMA 4X, 316 stainless steel.

2. Hinged outer door with continuous stainless steel hinge and stainless steel 3-point twist type latches.

C. Control System Features:

1. Operator Controls and Indications: Provide the following operator controls and indications at the LCP:
   a. Hand Switches:
      1) System ON-OFF control switch
      2) RESET Pushbutton
   b. Status Indicating Lights:
      1) System ON (white)
   c. Alarm Indicating Lights:
      1) Carbon Bed High ΔP (red)
      2) Mist Eliminator High ΔP (amber)
      3) Fan High Discharge Pressure (red)

2. Discrete Inputs to LCP: Provide for the following contact inputs to the control panel. Sensing voltage to be 120 VAC.
   a. From Field Devices provided by this Section:
      1) Fan High Discharge Pressure switch
      2) Carbon Bed High ΔP switch
      3) Mist Eliminator High ΔP switch

3. Discrete Outputs from the LCP: Provide the following maintained contact outputs that are to be used as discrete inputs for monitoring or control purposes.

a. Common Failure Alarm

D. Control System Operation:

1. When the local switch is in the ON position, the LCP monitors the operation of the Carbon Odor Control System based on the inputs from field devices.

2. When a HIGH discharge pressure condition exists on the fan, the Fan High Discharge Pressure pilot light is to be illuminated on the LCP and the Common Trouble Alarm is to be activated.

3. When a Carbon Bed High differential pressure condition occurs, the LCP pilot light is to illuminate and the Common Trouble Alarm is to be activated.

4. Upon a Mist Eliminator High differential pressure condition, the Common Trouble Alarm is to be activated and the LCP pilot light is to illuminate.

5. All alarm conditions are to latch and require that the RESET button on the LCP be pressed to reset the system.

6. Upon loss of power, system control is to reset.

E. Field Control Equipment:

1. Differential Pressure Indicators/Switch:
   a. General: Furnish and install differential pressure switch/gauges for indicating the pressure differential across the mist eliminator, the carbon bed, and for vacuum on fan suction.
   b. Construction:
      1) Size: 4-1/2" nominal dial size;
      2) Movement: Silicone rubber diaphragm with isolated magnetic helix;
      3) Housing: Die cast aluminum, Teflon impregnated anodized
      4) Window: Polycarbonate plastic, dust-tight;
      5) Connection: ¼" NPT;
      6) Pointer: Black, adjustable needle;
   c. Switch:
      1) Type: Two form C DPDT relays
      2) Electrical Rating: 10A @ 120 V AC
      3) Deadband: Maximum 1 percent of full scale.
      4) Repeatability: ±1% of full scale.
   d. Accuracy: ±3% of full scale.
   e. Switches for high and low setpoint are to be adjustable from knobs on gauge face.
   f. Scale Range: As required for equipment.
   g. Enclosure: Differential pressure indicators are to be flush mounted in individual NEMA 4X non-metallic enclosures. Make external connections with S.S. bulkhead fittings. Internal connections to be made with flexible ¼" ID, braid reinforced, high purity, silicone tubing that is UV and ozone resistant with a operating temperature range of -85 to 350°F. (Available from RyanHerco)
   h. Manufacturer: Dwyer Series A3000 Photohelic Differential Pressure Gauge, or equal.

2. Instrument Tubing, Fittings, and Valves:
   a. Tubing: ASTM A312, type 316, seamless, soft annealed, 0.065-inch wall.
   b. Fittings: Compression type, stainless steel, ASTM A182 forged body or ASTM A276 bar stock bodies, type 316, flareless by Parker, Swagelok, or equal.
   c. Valves: Stainless steel ball valves for on/off service, Whitey series 41 through 43, Hoke Flomite 1700 series, or equal
   d. Install instrument tubing with a continuous downward slope from the instrument to the process connection or provide a drip leg with a valve for removing moisture.

F. Electrical Components and Accessories:

1. General: Furnish and install all necessary electrical components, including all conduit, wiring, and terminations for a complete, functional system.

2. Relays: Per Division 16 requirements.

3. Pilot devices to be 30.5 mm heavy-duty nonmetallic NEMA 4X, Square D, Class 9001, Type SK or equal.

4. Pushbuttons to be extended guard type. Pushbuttons and selector switches shall be non-illuminated.

5. Pilot lights to be LED type. Pilot light lens colors shall be as follows:

   Red "Run", "On", "Open"
   Green "Off", "Closed"
   Amber "Alarm", "Fail"
   White "Control Power On"

6. Wiring (Inside Panels):
   a. Control wiring stranded copper, minimum #14 AWG.
   b. Insulation dual-rated for type THHN and THWN applications.
   c. Control terminals screw type, 300 V minimum rated, with minimum 10% or 6 spare terminals (whichever is greater).
   d. External control wiring terminations to be vinyl-insulated crimp connectors with spade lugs.
   e. Enclose wiring in sheet metal raceways or plastic wiring ducts.

7. Identification:
   a. Provide legend plates as follows:
      a. Pilot Devices - Aluminum with black background and white letters, mechanically attached with pilot device.
      b. Field Device – 1" wide black plastic with 3/8" white engraved lettering, attached with stainless steel screws or epoxy.
      c. Control Panel – 1" wide black plastic with 3/8" engraved white lettering, attached to exterior door with stainless steel screws or epoxy.
   b. Wire Identification:
      a. Wire Tags: Snap-on or slip-on PVC wire markers with legible machine printed markings and numbers. Do not use adhesive or taped-on tags.
      b. Numbered and tagged at each termination.

2.09 TIE DOWN SYSTEMS

A. Adsorber, and exhaust stack shall withstand horizontal loadings of 40 pounds per square foot or the maximum wind load at the location in accordance with the latest edition of the Building Code in the jurisdiction where the system will be installed, for the area under the worst condition, whichever is greater. Type 316L stainless steel clips, anchor bolts, and accessories shall be provided to securely anchor the adsorber vessel and exhaust stack to the concrete pad.

PART 3 -- INSTALLATION

3.01 INSTALLATION

A. All equipment shall be assembled and shipped so that field assembly will be minimized and installation can be completed with little or no field fabrication.

B. The odor control system shall be installed in accordance with the Contract Documents and the instructions of the Manufacturer.

3.02 SHOP TESTING

A. Carbon Vessel Shop Tests

1. Provide the services of an independent FRP Testing Inspector to be present at the point of manufacture, upon completion of fabrication and prior to shipment, to perform or witness the following:
   a. Visual inspection to the requirement of ASTM C582 and ASTM D2563.
   b. Barcol Hardness measurements per ASTM D2583-87.
   c. Acetone sensitivity test for all internal secondary bonds.
   d. Glass content by ignition loss on three cutouts per ASTM D2584.
   e. Hydrostatic Leak Test:
      1) Perform on each vessel.
      2) Fill to top of vessel; allow to stand for 2 hours with no visible leakage.

3.03 FIELD ACCEPTANCE TESTS

A. Field acceptance tests shall be required for all odor scrubber equipment specified herein within 12 months of delivery of the equipment. All equipment shall be field tested in accordance with the applicable requirements of Section 01660, Equipment and System Performance and Operational Testing, and Section 11000, General Requirements for Equipment. Field testing shall include mechanical tests and performance tests as specified below. The Contractor shall submit information which fully describes the manufacturer's testing procedure. The Contractor shall give at least ten days' notice of such tests and the Engineer shall have a representative present when acceptance tests are run. In case of failure of any unit to meet the test requirements, the manufacturer shall make such alterations as are necessary, and the tests shall be repeated without additional cost to the Owner until the equipment is satisfactory. Certified reports shall be submitted to the Engineer for approval.

B. Mechanical Test: The entire odor control system with other associated equipment such as fans, piping and controls shall be mechanically tested for at least 4 hours after initial

installation. The test shall be made with airflow being introduced at the design rate. All equipment shall show evidence of mechanical soundness, no evidence of liquid or gas leaks, no undue vibration and generally be structurally rigid when being tested.

C. Performance Test: The odor control system manufacturer shall test the system to meet the design conditions of service. The ability of the equipment to meet the performance requirement shall be determined by the capability of reducing H_2S by the greater of 99.0% of the concentration of hydrogen sulfide in the inlet air or 25 ppb(v).

1. The CONTRACTOR shall furnish the following items for testing:
   a. Portable manometer: 0 to 10-inches water, for differential pressure loss across reactor vessel.
   b. Air velocity meter with pitot tube for airflow through reactor.
   c. H_2S analyzers with continuous data monitoring and recording - Jerome 631-X, or equal.
   d. All labor and equipment manufacturer's field engineer for conducting the tests.

2. Test Procedures: The test shall be conducted for a two (2) hour period at design airflows. Inlet and exhaust H_2S concentrations shall be continuously monitored and recorded during the two hour testing period. Differential pressure shall be recorded.

D. The odor control system manufacturer's representative witnessing the field tests shall furnish the Owner, through the Engineer, a written report certifying that the scrubber unit:

1. Has been properly installed and accurately aligned.

2. Is free from any undue stress imposed by connecting piping and/or anchor bolts.

3. Has been operating at design airflow rates and that the unit operates satisfactorily.

4. The Contractor has accurately recorded the data obtained during the field test.

3.04 TOOLS, SUPPLIES AND SPARE PARTS

A. The Contractor shall furnish all special tools (one set per like piece of equipment) necessary to disassemble, service, repair and adjust the equipment. The spare parts which are identical and interchangeable with the original parts shall be furnished in clearly identifiable and labeled containers. The Contractor shall provide spare parts as recommended by the manufacturer.

C. The odor control system shall include the following spare parts:

- One (1) set of gaskets for all gasketed covers and connections for each system.
- One (1) set of internal bolts and fasteners for wetted service for each system.
- Four (4) hydrogen sulfide indicators for each system.

D. The Contractor shall furnish other spare parts as recommended by the various equipment manufacturers. All of these materials shall be properly packed, labeled and stored where directed by the Engineer. The Contractor shall furnish start-up lubricants.

3.05 EQUIPMENT IDENTIFICATION

A. Each piece of equipment shall be provided with an equipment nameplate in accordance with

Section 11000, General Requirements for Equipment, which will be securely fastened in a conspicuous place and clearly inscribed with the Manufacturer's name, year of manufacture, serial number, and principal rating data.

- END OF SECTION -

THIS PAGE

INTENTIONALLY

LEFT BLANK

SECTION 16347

MEDIUM VOLTAGE VACUUM CIRCUIT BREAKER SWITCHGEAR

PART 1 -- GENERAL

1.01 THE REQUIREMENT

A. The Contractor shall furnish, install, test, and place in satisfactory operation, dead-front type, medium voltage, draw-out, metal-clad circuit breaker switchgear as specified herein and indicated on the Drawings.

B. The switchgear shall be the vacuum power circuit breaker type with drawout circuit breaker elements.

C. The line-up shall contain utility circuit breakers, generator circuit breakers, generator bus tie circuit breakers, feeder circuit breakers, metering equipment, protective relays, control devices, generator synchronizing and load sharing controls, and all accessories as specified herein, indicated on the Drawings, and as required to result in a complete and operable power distribution equipment assembly.

D. The Contractor shall obtain the switchgear from the Packaged Engine-Generator System Supplier. Breaking out this 5kV switchgear equipment from the Engine-Generator System Supplier is not acceptable. Reference specification section 16620-Packaged Engine Generator System for additional requirements.

E. The Contractor shall obtain the switchgear from one manufacturer who shall also manufacture the structure and major equipment components, which includes, but is not limited to, assemblies of circuit breakers and auxiliary housings, drawout type vacuum circuit breakers, meters, and controls. The protection relays and generator controls shall be furnished by the manufactures specified herein. Sub-contracting of wiring is not acceptable.

F. The switchgear shall be assembled using ANSI and, where applicable, NEMA rated components. Components designed and built to International Electrotechnical Commission (IEC) standards are not recognized. Equipment designed, manufactured and labeled in compliance with IEC standards is not acceptable.

G. Circuit breaker control and relaying/metering circuits shall be wired in accordance with the requirements specified herein and indicated on the Drawings.

1.02 CODES AND STANDARDS

A. The switchgear assemblies and power circuit breakers shall comply with the following codes and standards:

1. American National Standards Institute (ANSI):

a. C37.06 - Switchgear Rating Capabilities for AC High Voltage Circuit Breakers Rated on a Symmetrical Current Basis.

b. C37.09, Section 4 - Test Procedures for AC High Voltage Circuit Breakers.

c. C37.20.2, Section 5.2 - Metal-Clad and Station Type Cubical Switchgear.

d. C39.1 - Requirements for Electrical Analog Indicating Instruments.

e. C57.13 - Requirements for Instrumentation Transformers.

2. Institute of Electrical and Electronic Engineers (IEEE).

3. National Electrical Code (NEC).

4. National Electrical Manufacturers' Association (NEMA):

a. SG4 - Power Circuit Breakers

b. SG5 - Power Switchgear Assemblies.

5. Underwriters Laboratories, Inc. (U.L.)

1.03 TESTING

A. All tests shall be performed in accordance with the requirements of the General Conditions and Division 1. The following tests are required:

1. Witnessed Shop Tests

a. The switchgear specified in this Section shall be witness shop tested and inspected in accordance with the equipment manufacturer's standard procedures. The testing and inspection procedures shall demonstrate that the equipment tested conforms to the requirements specified and shall be approved by the Engineer. At least 10 days notice shall be given the Engineer prior to such tests and inspection dates.

2. Certified Shop Tests and Reports

a. Submit description of proposed testing methods, procedures, and apparatus.

b. Submit certified copies of all factory test reports.

c. As a minimum, the entire switchgear assembly shall go through a quality inspection before shipment. This inspection shall include, but is not limited to, the following:

i. Physical inspection of the structure and the electrical conductors including bussing, general wiring, and cells.

ii. General electrical tests including power circuit phasing, control circuit wiring, instrument transformers, meters, protective relaying, and device electrical operation.

iii. AC dielectric tests of the power circuits and control circuits.

iv. Markings/labels, including instructional type, Underwriters Laboratory (U.L.), and inspector's stamps.

d. The following standard factory tests shall be performed on the circuit breaker element provided under this section. All tests shall be in accordance with the latest version of ANSI standards.

i. Alignment test with master cell to verify all interfaces and interchangeability.

ii. Circuit breakers operated over the range of minimum to maximum control voltage.

iii. Factory setting of contact gap.

iv. One-minute dielectric test per ANSI standards.

v. Final inspections and quality checks.

e. The following production test shall be performed on each breaker housing.

i. Alignment test with master breaker to verify interfaces.

ii. One-minute dielectric test per ANSI standards on primary and secondary circuits.

iii. Operation of wiring, relays, and other devices verified by an operational sequence test.

iv. Final inspection and quality check.

f. The manufacturer shall use integral quality control checks throughout the manufacturing process to maintain the correctness of the switchgear.

3. Field Tests

a. Field tests shall be performed in accordance with requirements specified in the General Conditions, Division 1, and Section 16000, Basic Electrical Requirements. Reference specification section 16620-Packaged Engine Generator System for additional system testing requirements.

1.04 SUBMITTALS

A. In accordance with the procedures and requirements set forth in the General Conditions and Section 01300, Submittals, the Contractor shall obtain from the equipment manufacturer and submit the following:

1. Shop Drawings

2. Operation and Maintenance Manuals

3. Spare Parts List

4. Special Tools List

5. Proposed Testing Methods and Reports of Certified Shop Tests

6. Manufacturer's Field Start-up Report

7. Manufacturer's Representative's Certification

B. Each submittal shall be identified by the applicable specification section.

1.05 SHOP DRAWINGS

A. Each submittal shall be complete in all respects, incorporating all information and data listed herein and all additional information required for evaluation of the proposed equipment's compliance with the Contract Documents.

B. Partial, incomplete or illegible submissions will be returned to the Contractor without review for resubmittal.

C. Shop drawings shall include but not be limited to:

1. Equipment specifications and product data sheets identifying all electrical ratings.

2. Complete assembly, layout, installation, and foundation drawings with clearly marked dimensions.

3. Weights of all component parts, assembled weight of units, and approximate total shipping weight.

4. Example equipment nameplate data sheet.

5. Plan, front and side view drawings, including overall dimensions of each switchgear assembly. Identify shipping splits and show conduit entry/exit locations on the drawings.

6. Internal wiring diagram of each medium voltage switchgear cell. Each wiring diagram shall include wire identification and terminal numbers. Internal wiring

diagrams of each low voltage metering compartment including wire identification and terminal numbers.

7. Internal cell-to-cell interconnection wiring diagrams including wiring identification and terminal numbers.

8. Complete one-line diagram of each switchgear line-up and complete three line diagrams for each switchgear cell. These drawings shall indicate devices comprising the complete switchgear assembly including, but not limited to, circuit breakers, control power and instrument transformers, meters, relays, PLCs, and control devices. Clearly indicate the electrical ratings of all devices.

9. Bill of material list for each switchgear assembly including each switchgear cell. The bill of material list shall include the manufacturer and the manufacturer's part number for each device.

10. Nameplate schedule for each cell.

11. Manufacturer's installation instructions.

12. Manufacturer's standard warranty.

13. Cable terminal sizes.

14. DC battery system sizing calculations.

D. The shop drawing information shall be complete and organized in such a way that the Engineer can determine if the requirements of these specifications are being met. Copies of technical bulletins, technical data sheets from "soft-cover" catalogs, and similar information which is "highlighted" or somehow identifies the specific equipment items the Contractor intends to provide are acceptable and shall be submitted. Shop Drawings shall be submitted electronically in AutoCAD format for control and layout drawings and PDF format for manuals and product literature. Electronically formatted drawings shall be organized on CDROM with an html driven menu system with a table of contents. Menu system shall allow point and click viewing of all submittal elements.

1.06 OPERATIONS AND MAINTENANCE MANUALS

A. The Contractor shall submit operation and maintenance manuals in accordance with the procedures and requirements set forth in the General Conditions and Division 1. The manuals shall include:

1. Instruction books, descriptive bulletins, technical bulletins, application data booklets, and other applicable instructional information.

2. Recommended spare parts list.

3. Final as-built construction drawings included in the shop drawings incorporating all changes made in the manufacturing process. As-builts shall also be submitted in electronic format as detailed under the Shop Drawing requirements.

1.07 TOOLS, SUPPLIES, AND SPARE PARTS

A. The switchgear shall be furnished with all special tools necessary to disassemble, service, repair, and adjust the equipment and all spare parts as recommended by the equipment manufacturer.

The Contractor shall furnish the following minimum spare parts for each switchgear assembly:

No. Required	Description
1 set	Power and control fuses of each size provided
1	Control power transformer of each size provided
5	Lamps and lenses for indicating lights, each color

B. The spare parts shall be packed in containers suitable for long term storage, bearing labels clearly designating the contents and the pieces of equipment for which they are intended.

C. Spare parts shall be delivered at the same time as the equipment to which they pertain. The Contractor shall properly store and safeguard such spare parts until completion of the Work, at which time they shall be delivered to the Owner.

D. Spare parts lists, included with the shop drawing submittal shall indicate specific sizes, quantities, and part numbers of the items to be furnished. Terms such as "1 lot of packing material" are not acceptable.

E. Parts shall be completely identified with a numerical system to facilitate parts inventory control and stocking. Each part shall be properly identified by a separate number. Those parts which are identical for more than one size, shall have the same parts number.

1.08 SERVICES OF MANUFACTURER'S REPRESENTATIVE

A. The Contractor shall provide the services of a qualified, factory-trained, manufacturer's technical representative who shall adequately supervise the installation and testing of all equipment furnished under this Contract and instruct the Contractor's personnel and the Owner's operating personnel in its maintenance and operation as outlined in Division 1 and Section 11000, Equipment - General Provisions. The services of the manufacturer's representative shall be provided for a period of not less than as follows:

1. One trip of two (2) working days during installation of the equipment.

2. One trip of one (1) working day for the setting of the protective devices.

3. One trip of one (1) working day after acceptance of the equipment

4. One trip of two (2) working days during the warranty period.

B. Any additional time required to achieve successful installation and operation shall be at the expense of the Contractor. The manufacturer's representative shall sign in and out at the office of the Engineer's Field Representative on each day he is at the project.

1.09 IDENTIFICATION

A. The switchgear assembly shall be identified with the identification number indicated on the Drawings. A nameplate shall be securely affixed in a conspicuous place on each switchgear assembly. Nameplates shall be as specified in Section 16195, Electrical - Identification.

1.10 TRAINING

A. The Contractor shall provide training for Owner personnel. Training shall be conducted by the manufacturer's factory-trained representative(s) who shall instruct Owner personnel in operation and maintenance of all equipment provided under this Section. Training shall be in accordance with the requirements of Section 11000, Equipment - General Provisions.

1.11 CONSTRUCTION SEQUENCING

A. The Contractor shall reference Section 01520, Maintenance of Utility Operations During Construction, of these Specifications for construction sequencing information during the construction period.

PART 2 -- PRODUCTS

2.01 MANUFACTURERS

A. The equipment covered by these specifications is intended to be standard equipment of proven performance as manufactured by reputable concerns. Equipment shall be designed, constructed, and installed in accordance with the best practices of the trade, and shall operate satisfactorily when installed as shown on the Drawings.

B. It is the intent of these specifications that the switchgear be produced by a single manufacturer who shall be responsible for matching all components and providing equipment which functions together as a system. Manufacturers that provide complete switchgear assemblies using vacuum power circuit breakers produced by another major manufacturer shall only be allowed if specifically accepted by the Engineer.

C. The switchgear shall be as manufactured by Russelectric, ASCO, or G.E.-Zenith Controls.

2.02 MEDIUM VOLTAGE METAL-CLAD SWITCHGEAR

A. General

1. Switchgear shall be suitable for use as service entrance equipment. Each complete assembly including each vacuum power circuit breaker shall bear a U.L. label.

2. The switchgear described in this specification shall be designed for operation on a 4.16 kV, three-phase, 3 wire, solidly grounded, 60 hertz system.

B. Ratings

1. Nominal voltage rating shall be 4.16 kV. The entire assembly shall be suitable for 4.76 kV maximum AC service. Basic impulse insulation level (BIL) shall be 60 kV.

2. Rate complete switchgear assembly to withstand mechanical forces exerted during short circuit conditions when connected directly to a power source having available fault duty of 250 mega-volt amperes (MVA).

3. The main bus shall have an ampere rating as indicated on the Drawings.

4. All ratings shall be tested to the requirements of ANSI C37.04, C37.06, C37.09 and C37.20.2.

5. The switchgear assembly shall be suitable and rated for indoor construction.

C. Stationary Structure

1. The switchgear structure shall be of "two-high" construction and constructed of formed sections of specially smooth and leveled steel, welded and bolted together and reinforced where necessary with formed steel members. The sides shall be covered with removable bolt on covers. The resulting structure shall be rigid and self-supporting. Structural steel channel sills with end covers shall be furnished for mounting and aligning the separate elements of the structure. The steel channels shall be installed in the concrete floor.

2. The rear of structure shall be covered with individual, hinged, padlockable steel doors for access to buses, connections, and other equipment mounted within each cell. The ends of the structure shall be closed with removable steel panels held in place with slotted head bolts or concealed screws. The hinged access doors shall be provided with 2-point latches, door stops, structural reinforcing to prevent sagging, and provisions for padlocking.

3. Secondary control devices and associated wiring shall be isolated from all high voltage primary devices by grounded metal barriers. Primary circuits such as circuit breakers, transformers, and buses shall also be isolated from each other and from personnel by grounded metal barriers.

4. The assembly shall be provided with adequate lifting means and shall be capable of being moved into installation position and bolted directly to Contractor supplied floor sills to be set level in concrete per manufacturer's instructions. Provisions shall be made for jacking of shipping groups for removal of skids or insertion of equipment rollers. Base of assembly shall be suitable for rolling directly on pipes without skids.

5. Each vertical steel unit forming part of the switchgear line-up shall be a self-contained housing having one or more individual breaker or instrument cells, a centralized main bus compartment, and a rear cabling compartment. Each individual circuit breaker compartment, or cell, shall be segregated from adjacent compartments and sections, including the bus compartment, by means of grounded steel barriers. It shall be equipped with drawout rails and primary and secondary

disconnecting contacts. Current transformers for circuit protection and instrumentation shall be located within the appropriate breaker cells.

6. The stationary part of the primary disconnecting devices for each vacuum power circuit breaker shall consist of a set of contacts extending to the rear through a glass polyester insulating support barrier; corresponding moving finger contacts suitably spaced shall be furnished on the power circuit breaker studs which engage in only the CONNECTED position. The assembly shall provide multiple silver-to-silver full floating high pressure point contacts with uniform pressure on each finger maintained by springs. Each circuit shall include the necessary three-phase bus connections between the section bus and the breaker line side studs. Load studs shall be equipped with insulated copper load extension busses terminating in solderless type terminals in the rear cable compartment of each structure. Bus extensions shall be silver-plated where outgoing terminals are attached.

7. The primary insulated bushings shall be suitable for mounting two (2) current transformers on each side (line and load) for a minimum total of four (4) sets of current transformers.

8. The secondary disconnecting devices shall consist of a plug mounted on the removable unit and engaging a socket mounted in the compartment. The secondary disconnecting devices shall be silver-plated and sliding contact engagement shall be maintained in the CONNECTED and TEST positions.

9. The removable vacuum power circuit breaker element shall be equipped with disconnecting contacts, wheels, and interlocks for drawout application. It shall have four positions, CONNECTED, TEST, DISCONNECTED and REMOVE all of which permit closing the compartment door. The breaker drawout element shall contain a worm gear levering "in" and "out" mechanism with removable lever crank. Mechanical interlocking shall be provided so that the breaker is in the tripped position before levering "in" and "out" of the cell. The breaker shall include a provision for padlocking. The padlocking shall secure the breaker in the CONNECTED, TEST, or DISCONNECTED position by preventing levering.

10. Hinged doors with removable hinge pins shall be provided for the fronts of the drawout vacuum power circuit breaker compartments. Doors shall be interlocked with the breaker element to prevent opening the door while the breaker is in the CONNECTED position.

11. Hinged panels shall be provided for mounting of meters, protective relays, and other devices. Doors and panels shall be equipped with concealed hinges and suitable latches. Doors and panels shall have one-inch (1") deep formed edges with double returns where necessary to assure stiffness.

12. A steel safety shutter shall be furnished to automatically cover the bus stabs in the circuit breaker compartment when the circuit breaker unit is moved to the TEST, DISCONNECTED, or REMOVE position.

13. Provide a rear compartment steel barrier between the cable compartment and main bus to protect against inadvertent contact with the main bus. Provide full height and depth metal barriers between adjacent vertical structures in the cable compartment.

Provide a full height and depth glass polyester barrier with appropriate slots for the main bus between adjacent vertical structures in the bus compartment.

14. Equip each cable compartment to accept the termination of 5kV class conductors with stress cones resulting in a complete Class 1 termination. Each cable compartment shall be suitable for the specified cable, of quantity and size as indicated on the Drawings.

15. All "space" compartments specified herein or indicated on the Drawings shall be furnished ready to receive a future vacuum power circuit breaker of appropriate size. Insulating barriers shall be installed in the cubicles to cover all live terminals to prevent accidental contact. The "space" need not be a "prepared space" or "future" complete with all appurtenances. Blank doors (no cut-outs) are acceptable.

16. The withdrawal type units and the stationary sections for these units shall be assembled in jigs which accurately locate the contacts, holding devices, and interlocks. One removable unit of each type and rating shall be tried in each stationary compartment of same type and rating. Each stationary compartment shall be checked with its own removable unit to insure interchangeability.

17. Equip each incoming line main circuit breaker cell with distribution class metal oxide surge arresters,. The surge arresters shall be suitable for the application with a maximum continuous operating voltage (MCOV) rating based on higher switchgear ambient (55°F) conditions. The arresters shall be designed, tested, selected, and installed in accordance with ANSI C62 - Guides and Standards for Surge Protection.

D. Bus

1. Buses and main connections shall consist of flat copper bars.

2. The main bus shall be fully insulated for its entire length with a flame retardant and track-resistant epoxy coating installed by the fluidized bed process. Provide the 3 phase bus of each unit with insulation to completely encase each bar, except provide removable, insulating boots at bus joints.

3. The bus shall be braced to withstand fault currents equal to the close and latch (momentary) rating of circuit breakers.

4. Access to the main bus compartment shall be from the rear of the structure after removing the steel barrier.

5. Bus supports between units shall be flame-retardant, track-resistant glass polyester. Bus joints shall silver plated and be insulated with easily installed boots. The bolted bus joints shall use constant pressure washers for positive contact.

6. An uninsulated ground bus of adequate capacity shall be furnished and installed throughout the switchgear structure. Each stationary unit shall be effectively connected to this ground bus. A substantial ground contact shall be provided between each breaker and removable element and the ground bus, which shall automatically be made before the primary contacts touch. Contact engagement to the ground bus shall be maintained in the CONNECTED and TEST positions.

7. The uninsulated ground bus shall be tin-plated copper bar. Ground each housing directly to this bus. Ground relay panels with a No. 6 AWG insulated copper wire to the ground bus.

8. All main, and ground buses shall be extended through the entire length of the switchgear assembly. All busses shall have provisions for future extension.

E. Removable Element

1. The removable element of each circuit breaker unit shall consist of a 3-pole vacuum circuit breaker with trip-free stored-energy mechanism, positive mechanical interlock, primary and secondary disconnecting devices, auxiliary switches, position indicator, and control wiring. The removable element shall have four positions: CONNECTED, TEST, DISCONNECTED, and REMOVE, all of which permit closing of the compartment door.

2. Provide for padlocking of the removable element in the TEST and DISCONNECTED position. Lock shall not interfere with operation of the breaker and its mechanism.

3. Provide an interlock on each circuit breaker unit to prevent the circuit breaker from being removed while breaker is closed and to prevent breaker from being placed in the CONNECTED position unless the breaker is open. If the circuit breaker is closed, the interlock shall trip the breaker before it can be placed in the CONNECTED position.

4. Interlocks shall be provided to prevent the circuit breaker between the CONNECTED and TEST positions, to trip breakers upon insertion or removal from the housing, and to discharge the stored energy mechanisms upon insertion or removal of the circuit breaker from the housing. The circuit breaker shall be secured positively in the housing between and including the CONNECTED and TEST positions.

F. Circuit Breakers

1. Each drawout vacuum power circuit breaker shall be capable of being withdrawn on rails and shall be enclosed in a separate metal compartment. The breakers shall be operated by a motor-charged stored energy spring mechanism, charged normally by a universal electric motor and in an emergency by a manual handle. The primary disconnecting contacts shall be silver-plated copper.

2. Vacuum circuit breakers shall have the following minimum ratings:

a.	Nominal voltage:	4.16 kV
b.	Maximum voltage:	4.76 kV
c.	BIL rated:	60 kV
d.	Continuous current:	1200 A
e.	Short circuit current at rated maximum kV:	29 kA
f.	Closing and latching capability:	97 kA
g.	Three-second rating	36 kA

h. Nominal three-phase MVA class: 250 MVA
i. Rated interrupting time: Five cycles

3. Circuit breakers shall be suitable for application in their enclosures for 100 percent of their continuous current rating.

4. Circuit breakers of equal rating shall be completely interchangeable.

5. Equip each circuit breaker with silver-plated secondary disconnecting contacts to automatically engage in the CONNECTED position and manually engage in the TEST position to complete circuits as required.

6. Provide a means for racking the circuit breaker in and out of the cell and between positions. Provide a means for holding the circuit breaker in the cell in all positions. Include a provision for padlocking open to prevent manual or electric closure of the circuit breaker.

7. Provide interlocking to prevent a closed circuit breaker from racking to or from any position. Provide an additional interlock to assure automatic discharging of the closing springs upon insertion or removal of the breaker into or out of the cell.

8. Each circuit breaker shall contain three vacuum interrupters separately mounted in a self-contained, self-aligning pole unit which can be removed easily. The vacuum interrupter pole unit shall be mounted on glass polyester supports. A contact wear gap indicator for each vacuum interrupter, which requires no tools to indicate available contact life, shall be easily visible when the breaker is removed from its cell. The current transfer from the vacuum interrupter moving stem to the breaker main conductor shall be a non-sliding design. The breaker front panel shall be removable when the breaker is withdrawn for ease of inspection and maintenance.

9. A TEST position for each vacuum power circuit breaker shall be provided and so interlocked to insure proper sequence and safe operation.

10. Each main, tie, and feeder circuit breaker shall be provided with "a" and "b" auxiliary contacts which will open or close when the breaker is open or closed. Each breaker shall also be provided with an alarm switch or contact to indicate that the breaker has tripped. All of these contacts shall be wired to terminals in each cell for use in indicating breaker status. Each circuit breaker shall be furnished with enough auxiliary contacts to indicate breaker position as required for this Contract.

11. The vacuum power circuit breakers shall be electrically operated by a 48 volt DC close and 48 volt DC trip. The control voltage shall be derived from the DC control voltage system specific herein and indicated on the Drawings.

12. All circuit breakers shall be furnished with Device 86 lock-out relay.

G. Protective Relaying and Power Monitoring

1. The switchgear manufacturer shall furnish and install in the switchgear the quantity, type, and rating of protective relays and power monitors as specified herein and indicated on the Drawings.

2. Each generator circuit breaker cell shall be furnished with a door mounted, draw-out, multi-function, microprocessor based protective relay. The device shall be true RMS sensing of each phase and ground. The unit shall be operational from a 48 VDC control power source. The device shall provide the following minimum protective and metering functions:

Device ID	Function
12	Overspeed
24	Overexcitation, Volts/Hz
27	Undervoltage
38	Bearing Overtemperature
39	Bearing Vibration (Analog Inputs)
50/51 GN	Instantaneous or Definite Time Overcurrent
59GN/27TN	100% Stator Ground
50/27	Inadvertent Generator Energization
50BF	Breaker Failure Detection
51V	Voltage Restrained Phase Overcurrent
32	Reverse Power for Anti-Motoring
40Q	Loss of Field
46	Negative Sequence Overcurrent (I^2t)
47	Voltage Phase Reversal
49	Stator Thermal (RTD)
59	Overvoltage
60FL	VT Fuse Failure Detection
81 O/U	Over/Under frequency
87G	Phase Differential

The relay shall be provided with complete monitoring and metering functions which include, but are not limited to, the following:

- current
- voltage
- power (kW, kvar, kVA)
- energy use (MWh, Mvarh)
- power factor
- frequency
- demand current (real-time)
- demand power (kW, kVAR, kVA) (real-time)
- peak demand current
- peak demand power (kW, kVAR, kVA)

The relay shall be suitable to accept a minimum of four (4) analog inputs and to provide a minimum of four (4) analog outputs. The device shall also be furnished with a minimum of one (1) RS-232 port and one (1) RS-485 port. Each of these ports shall support ModBus RTU protocol.

The device shall be a GE/Multilin 489 or shall be the equivalent ABB multifunction relay with the appropriate instrumentation (FUTURA+ by Electro Industries).

3. Each main, tie, and feeder circuit breaker cell shall be furnished with a door mounted, draw-out, multifunction, microprocessor based feeder protective relay. The device shall be true RMS sensing of each phase and ground. The unit shall be operational from a 48VDC control power source. The device shall provide the following minimum protective and metering functions:

Device ID	Function
25	Synchrocheck
27	Undervoltage
32	Reverse Power
50/46	Negative Sequence IOC
51/46	Negative Sequence TOC
67/46	Negative Sequence Directional Overcurrent
47	Negative Sequence Voltage
50	Breaker Failure
50P	Phase IOC
50N	Neutral IOC
50G	Ground IOC
50SG	Sensitive Ground IOC
51P	Phase TOC
51N	Neutral TOC
51G	Ground TOC
51SG	Sensitive Ground TOC
55	Power Factor
59	Overvoltage
59N	Neutral Overvoltage
67P	Phase Directional Overcurrent
67N	Neutral Directional Overcurrent
67G	Ground Directional Overcurrent
67SG	Sensitive Ground Directional Overcurrent
81U	Underfrequency
81O	Overfrequency

The relay shall accurately meter, calculate, and display the following:

- current
- voltage
- power (kW, kvar, kVA)
- energy use (MWh, Mvarh)
- power factor
- frequency
- demand current (real-time)
- demand power (kW, kVAR, kVA) (real-time)

- peak demand current
- peak demand power (kW, kVAR, kVA)

The relay shall provide seven (7) transducer output channels with user selectable output ranges. The device shall also be furnished with a minimum of one (1) RS-232 port and one (1) RS-485 port. Each of these ports shall support ModBus protocol.

The device shall be a GE/Multilin 750.

4. All circuit breakers, except for the tie circuit breakers, shall be furnished with a power quality meter for continuous monitoring of the three-phase system. The meter shall be complete with display, transducer option for four (4) isolated 4-20 mADC analog outputs, four (4) programmable output relays, and a power analysis (e.g. harmonic) option. The device shall be a G.E./Multilin PQM II, with ethernet communication capabilities, an Eaton Electrical IQ Analyzer 6000 with ethernet communication capabilities or equal.

5. The switchgear manufacturer shall interconnect all of the multifunction relays and power quality meters via their respective the RS-485 communication ports. These devices shall then communicate with the Master Generator Switchgear PLC.

H. Direct Current Battery Systems for Switchgear Control

1. Furnish and install battery systems as indicated on the Drawings and specified herein, to operate breaker mechanisms and protective relays.

2. The battery system shall be capable of operating 50% of the circuit breakers simultaneously. One minute discharge rate down to final 1.14 volt/cell shall be equal to trip current drawn by 50% of breakers tripping simultaneously.

3. Batteries shall be sealed pocket plate nickel-cadmium type, cabled to produce a 48 VDC output.
   a. Each switchgear cubicle shall have a fused direct current circuit. Provide batteries with a rack assembly to house the batteries and charger.
   b. Furnish a current limiting battery charger to automatically recharge the batteries. The charger to float at 2.17 volts per cell and equalize at 2.33 volts per cell. Include overload protection, silicon diode full wave rectifiers, voltage surge suppressors, direct current ammeter, and fused alternating current output. Amperage output to be not less than 20 amperes. Chargers shall be as manufactured by Charles Industries, LeMarche, or equal.

4. Minimum battery system ratings shall be as required by the switchgear manufacturer plus 25% spare capacity. Submit battery system sizing calculations in the Shop Drawings.

I. Operation and Interlocks for the 5kV Switchgear

1. Normally, the switchgear will operate from one of the two utility sources. The two 5kV bus sections will operate independently with the utility breakers in the CLOSED position and the generator tie breakers are in the OPEN position.

2. The utility breakers shall be interlocked with the bus tie breaker to function as follows:
   a. Permit closing one or both utility breakers when the generator tie breakers are OPEN.
   b. Prevent closing both generator tie breakers when both utility breakers are CLOSED.
   c. Permit closing the generator tie breakers when one or both utiltiy breakers are OPEN.
   d. Permit closing of only one utility breaker when the generator tie breakers are CLOSED.

J. Current Transformers

1. Ring type current transformers shall be furnished as specified herein and indicated on the Drawings. The thermal and mechanical ratings of the current transformers shall be coordinated with the circuit breakers.

2. Multi-tap primary transformers shall be provided on all circuits. Multi-tap CT's shall be rated as follows: Primary maximum rating shall be 2000A for 2000A frame breakers and 1200A for 1200A frame breakers. Multiple taps on each CT shall be as follows:

   2000A:2000,1600,1500,1200,1100,500,400,300

   1200A:1200,1000,900,800,600,500,400,300,200,100.

3. Current Transformers shall be suitable for metering and relaying applications. Transformers shall be rated in accordance with ANSI Standard C57.13, with accuracy of the current transformers suitable for B0.5 metering accuracy at rated burden. The current transformers shall be sized for the necessary burden for the required devices, minimum.

4. Identify the current transformers for polarity with standard marking or symbols. The transformers shall be capable of carrying rated primary current continuously without damage.

5. Secondary wiring from current transformers shall be routed in suitable wiring trough or conduit to proper short-circuiting type terminal blocks for connection to protective relays, instruments, and other devices.

6. Locate the current transformers on the bus side and line side of the circuit breaker units to be front accessible to permit adding or changing transformers without removing high voltage insulation connections.

K. Voltage Transformers

1. Voltage transformers shall be indoor dry type, single-phase, 60 hertz.

2. Voltage transformers shall have an accuracy classification determined according to ANSI Standards. The voltage transformers shall be suitable for metering accuracy,

the burden to be served for the required devices plus 20 percent, and shall meet the following minimum requirements:

a.	BIL:	60kV
b.	Primary Voltage:	4.16 kV
c.	Secondary Voltage:	120 volts.
d.	Metering Accuracy Class:	0.3 at rated burden

3. Identify polarity with standard markings or symbols. Connect secondaries to voltage buses as required. Protect voltage transformers with primary and secondary fuses. Protect the primary side with current-limiting fuses.

4. Voltage transformers shall be mounted in drawout drawers contained in an enclosed auxiliary compartment. Rails shall be provided (see Accessories) to permit easy inspection, testing, and fuse replacement. Automatic shutters shall be furnished to isolate primary bus stabs when the drawers are withdrawn from the cell.

L. Control Power Transformers

1. Provide control power transformers (CPT) as specified herein, indicated on the Drawings, and as required. Furnish control power transformers that have adequate capacity for the load to be served plus 25%.

2. Protect control power transformers. Protect primary side with current limiting fuses. Protect the secondary side with a molded case circuit breaker.

3. Control power transformers for space heaters, lighting, receptacles and other ancillary loads shall be separate from those used for control circuits.

4. Control power transformers shall be mounted in drawout drawers. Rails shall be provided (see Accessories) to permit easy inspection, testing, and fuse replacement. Shutters shall isolate primary bus stabs when drawers are withdrawn.

5. A mechanical interlock shall be provided to require the CPT secondary circuit breaker to be open before the CPT drawer can be withdrawn.

6. Where multiple control power transformers are required, the switchgear 120VAC control system shall be furnished with transfer circuits that will maintain the 120VAC control voltage by automatically transferring the 120VAC control system to an energized CPT.

M. Control Wiring and Testing

1. Wire and factory test switchgear to satisfy the requirements of the operation described or necessary.

2. Switchgear secondary wiring shall be NEC Type SIS, single-conductor, stranded copper, rated 600 volts, 90°C bundled and secured with nylon ties. Provide flexible stranding for swinging doors and panels. Minimum wire size shall be No. 14 AWG for voltage transformer and control circuits. For current transformer circuits, minimum wire size shall be No. 12 AWG. Number 10 AWG or larger wire shall be used to decrease resistance as required.

3. Route outgoing control wires for outgoing or "cell-to-cell" interconnecting wiring to the master terminal blocks with suitable numbering strips numbered in agreement with the manufacturer's detailed wiring diagrams.

4. Terminate control wiring in molded terminal blocks acceptable to Engineer. Provide a minimum of 10 percent (10%) spare terminal blocks for each circuit breaker and auxiliary compartment. Compression type terminal blocks are not acceptable. Terminal blocks shall be States Company sliding link Type NT or as accepted by Engineer.

5. Number wiring with shrink-type tag devices at both ends consistent with the manufacturer's detailed wiring diagrams. Duplication of wire numbers and terminal block numbers is not acceptable.

6. One control circuit cut-out device shall be furnished in each circuit breaker housing.

N. Instruments, Meters, Protective Relays and Control Devices

1. The switchgear manufacturer shall furnish and install in the switchgear instruments, meters, protective relays, and control devices complete with devices and associated circuitry necessary to perform the required functions specified herein and indicated on the Drawings. Manufacturers of relays and controls are listed to describe system operating requirements. Other manufacturers will be considered where equivalent relay operating characteristics can be provided as accepted by the Engineer. Any material not specifically listed or shown but necessary to perform required functions shall be furnished.

2. Mount instruments and protective relays on the hinged doors secured to the stationary structure. Devices shall have enclosing cases, dull black finish, and mounted semi-flush. Provide nameplates per Section 16195, Electrical - Identification.

3. Panel mounted relays shall be switchgear drawout type (if available) with built-in testing facilities. Contacts shall be self-aligning and visible to permit ready inspection.

4. Instrument and control switches shall be rotary operated type with means for maintaining contact position. Contacts shall be silver-to-silver, enclosed in easily removable protective covers. Provide indicating lights for circuit breakers with low voltage indicating lamps. Lamps shall be easily removable from front of panel and shall be LED type. Indicating lights shall be NEMA rated, 22.5 mm with chrome bezel. Switches shall be as manufactured by Electro-Switch, Inc., General Electric Company, or equal.

5. Furnish wiring, potential bus, necessary fuses, and terminal blocks within each cell. Shield secondary and control wiring within the high voltage cell in a protective metal covering.

6. Requirements for items mounted on hinged doors or panels are as follows:
   a. Semi-flush mounting unless otherwise noted.

b. Items specified as drawout case type shall be removable-chassis construction providing for removal of the relay from the case without disconnecting the leads or removing the case from the panel. The associated current-transformer secondaries shall automatically short-circuit at the case when the relay is removed from its case. Furnish built-in test facilities and visible self aligning contacts.

c. Instruments shall be in accordance with ANSI C39.1, 1 percent accuracy class, 4-1/2 inch nominal square, with 250 degrees scale unless otherwise noted.

d. Terminal blocks, wireways, wiring, device mounting brackets, and other miscellaneous items shall be provided as required.

7. Microprocessor-based customer metering shall be provided as specified in the Description of Sections below.

O. Nameplates

1. Provide engraved plastic nameplates to identify switchgear units, door mounted devices, and internal components.

2. Nameplates shall be as specified in Section 16195, Electrical - Identification engraved with the circuit number and circuit name as indicated on the Drawings.

3. Label the switchgear per the requirements of the NEC and ANSI C37.20.2.

4. Provide a master nameplate giving switchgear designation, voltage-ampere rating, short circuit rating, manufacturer's name, general order number and item number.

5. Control components mounted within the assembly, such as fuse blocks, relays, pushbuttons, switches, and similar devices, shall be suitably marked for identification corresponding to appropriate designations on manufacturer's wiring diagrams.

P. Switchgear Equipment

1. Furnish and equip the circuit breaker compartments and auxiliary compartments as previously specified and as follows:

a. Vacuum circuit breaker unit including 1 set of primary disconnecting devices and current transformers, and, where specified or required, potential transformers with fuses.

b. Vacuum circuit breaker faceplate with a breaker open/close position indicator, closing spring charged/discharged indicator, push-to-trip button, push-to-close button, operation counter, breaker latch, and manual spring charging access.

c. Door-mounted circuit breaker pistol grip control switch with red (closed) and green (open) indicating lights to indicate breaker contact position.

d. Top and/or bottom entries for power cable entry as required and as indicated on the Drawings.

e. Ground bus extending the full length of the switchgear. Provide lugs at each end of the bus for ground cable terminations.

f. Auxiliary contacts, auxiliary relays, and interposing contactors as required to provide remote interlocking and indicating functions specified herein and indicated on the Drawings. Provide 2 spare normally open and 2 spare normally closed contacts per auxiliary relay, contactor, and similar equipment.

2. Switchgear shall be furnished complete with fused, thermostatically controlled space heaters. One space heater shall be installed in each vertical structure. Utilize tubular type operated at half voltage for long life; 250 volt rated heaters at 120 volt. Provide power supplies to the space heaters shall be as specified herein and indicated on the Drawings. The Contractor shall wire heaters to provide temporary heating during storage.

Q. Description of Sections

1. In addition to the specified basic equipment common to all switchgear sections, equip the various individual sections with instruments, protective relays, and control devices as described below. Arrange the equipped sections side by side to form continuous switchgear lineups as indicated on the Drawings.

2. The detailed descriptions which follow are intended to describe basic features of the equipment required and are not intended to specify all devices and materials necessary. It shall be the manufacturer's responsibility to provide and install, as required, all auxiliary relays, auxiliary transformers, terminal strips and such devices and materials required to provide complete units ready for installation and operation.

a. Each main circuit breaker section and respective instrument compartment shall contain the following:
   i. 1,200 ampere frame circuit breaker, electrical close and trip.
   ii. Protective relays and generator control components as specified herein.
   iii. Circuit breaker control switch with breaker status (open-closed) indicating lights.
   iv. Power quality meter as specified herein
   v. Three (3) current transformers: Ratio as indicated on the Drawings.
   vi. Three (3) potential transformers.
   vii. One (1) control power transformer
   vii. Zero sequence ground current sensor.
   viii Circuit breaker control module (CBCM)

b. Each generator tie circuit breaker section shall contain the following:
   i. 1,200 ampere frame circuit breaker, electrical close and trip.
   ii. Protective relays and generator control components as specified herein.
   iii. Circuit breaker control switch with breaker status (open-closed) indicating lights.
   iv. Three (3) current transformers: Ratio as indicated on the Drawings.
   v. Three (3) potential transformers.
   vi. Circuit breaker control module (CBCM)

c. Each generator breaker section shall contain the following:
   i. 1,200 ampere frame circuit breaker, electrical close and trip.
   ii. Protective relays and generator control components as specified herein.

iii. Circuit breaker control switch with breaker status (open-closed) indicating lights.
iv. Power quality meter as specified herein
v. Three (3) current transformers: Ratio as indicated on the Drawings.
vi. Three (3) potential transformers.
vii Genset controller (GSC)

d. Each feeder breaker section shall contain the following:
i. 1,200 ampere frame circuit breaker, electrical close and trip.
ii. Protective relays and generator control components as specified herein.
iii. Circuit breaker control switch with breaker status (open-closed) indicating lights.
iv. Power quality meter as specified herein
v. Three (3) current transformers: Ratio as indicated on the Drawings.
vi. Three (3) potential transformers.
vii. Zero sequence ground current sensor.

Additional bus potential transformers, control power transformers, and other devices shall be furnished as shown on the drawings and as required for a complete and operable system.

R. Warning Signs

1. Provide a minimum of two (2) warning signs on the front of the switchgear lineup and two (2) on the back.
a. Red laminated plastic engraved with white letters approximately 1/2 inch high.
b. Signs shall read "DANGER HIGH VOLTAGE"

S. Source Quality Control

1. Completely assemble, wire, and test the switchgear at the factory. Detailed inspections before and after assembly shall assure correctness of design and workmanship. Provide groups of wires leaving the shipping-assembled equipment with terminal blocks with suitable numbering strips.

2. After assembly, provide the switchgear with lifting channels having eyebolts for attachment of crane slings to facilitate lifting and handling each shipping-assembly unit. These lifting channels shall be removable after equipment is placed on permanent foundations.

T. Accessories

1. Switchgear accessories shall be provided by the switchgear manufacturer for test, inspection, maintenance, and operation as follows:
a. One (1) maintenance tool for manually charging the breaker closing spring and manually opening the shutter
b. One (1) levering crank for moving the breaker between the TEST and CONNECTED positions
c. One (1) test jumper for electrically operating the breaker while out of its cell

d. One (1) breaker lifting yoke used for attachment to breaker for lifting breaker on or off compartment rails
e. One (1) set of rail extensions and rail clamps
f. One (1) portable lifting device for lifting the breaker on or off the rails
g. One (1) "dockable" transport dolly for moving breaker about outside its compartment
h. One (1) ramp for rolling breaker directly onto the floor.
i. One (1) test cabinet for testing electrically operated breakers outside the cell
j. Secondary couplers for operating a power circuit breaker in the DISCONNECTED position.
k. Test plugs for drawout relays and meters.

U. Finish

1. The switchgear finish shall consist of gray (ANSI-61), thermosetting, polyester powder paint applied electrostatically to pre-cleaned and phosphatized steel and aluminum for internal and external parts. The coating shall have corrosion resistance of 600 hours to 5% salt spray. Prior to shipment, the complete assemblies, indoor as well as outdoor, shall be given 1.5 to 2.0 mil thick exterior finish spray coat of air drying high-gloss gray enamel.

2.03 AUTOMATIC TRANSFER AND GENERATOR PARALLELING AND LOAD SHARING CONTROLS

A. Generator paralleling, synchronizing, and load sharing controls shall be integrated into the switchgear package. Controls shall be installed to allow parallel operation and closed transition power transfer between the standby power generators and the utility. The controls shall include devices to automatically and manually synchronize and parallel the generator set with the electric utility. Once in parallel, the load controls shall softly load/unload the generator as required to provide zero power transfer at separation, and at retransfer to the utility.

B. The generator and transfer controls shall consist of the following components and features as a minimum:

1. Provide genset governors to control the diesel engine speed and load.

2. An automatic, digital, load control and synchronizing system. This system shall consist of a microprocessor based genset controller (GSC) for each generator and a microprocessor based circuit breaker control module (CBCM) for each utility circuit breaker and each generator tie circuit breaker. The genset controllers shall control all aspects of Generator set operation including, but not limited to, voltage control, speed control, automatic engine starting and stopping, synchronization, load sharing, VAR sharing, power factor control, and generator circuit breaker control. The genset controllers shall be the Woodward GCP-31 Genset Control Package. The circuit breaker control modules shall be the Woodward LS-4 Circuit Breaker Control and Protection devices.

3. Provide a PLC and a digital operator interface to allow monitoring and control of the generator system. The PLC shall be an Allen Bradley Compact Logix with L32E or L35E processor. The PLC shall be furnished with Ethernet communication

capabilities to communicate with the Pump Station PLC. The operator interface shall be a 15 inch (diagonal), color TFT industrial display. This display shall support a minimum resolution of 1024 x 768 pixels. Interface shall be accomplished via a key protected touch screen permanently affixed to the display. The touch screen shall be clear glass, with light transmission of 95% or better, furnished with a Surface Acoustic Wave touch interface. Resistive or Capacitive touch interfaces are not acceptable. Navigation and operation shall be intuitive such that Help Screens are not required. The Operator Interface shall support complete Generator set and System Level control in both Automatic and Manual modes.

4. Manual load control and transfer system to back-up the automatic load control and synchronizing system. The manual system shall be operational upon failure of the automatic system. A selector switch for selection of auto/manual mode load control shall also provided. The manual system shall consist of voltage and frequency adjustment potentiometers and selector switches for selection of auto/manual mode load control. The auto/manual load control selector switch, the voltage and frequency adjustment potentiometers shall be installed behind a lockable cover and shall be accessible from the front of the switchgear.

5. 24VDC control power system for the generator control system components, the operator interface, and the PLC. The 24VDC control power system shall be sourced from the generator 24VDC starting batteries and a 24VDC power supply connected to the switchgear 120VAC control power circuit. The 24VDC control power system shall be furnished with transfer circuits that will maintain the 24VDC control voltage by automatically transferring the “best source” 24VDC power supply.

6. Generator Manual-Off-Auto selector switch for each generator. In the “manual” position, the generator will start. In the “off” position, the generator will not operate under any condition. In the “auto” position, the generator start/stop control will be from the generator control system.

7. Provide a pushbutton to initiate transfer from utility to generator.

8. Provide a pushbutton to initiate retransfer from generator to utility.

9. Provide an annunciator panel shall be provided for each generator and for the main generator control and transfer system. The annunciator panel shall provide indication of the following signals for each generator:

- Engine Run
- Engine Stopped
- Engine Overspeed
- Low Oil Pressure Alarm
- Low Oil Pressure Shutdown
- High Coolant Temperature Alarm
- High Coolant Temperature Shutdown
- Failure to Synchronize
- Engine Summary Alarm
- Engine Summary Shutdown
- Low Fuel Level
- Engine Control Switch (ECS) in Off position
- Engine Control Switch (ECS) in Manual position
- Engine Control Switch (ECS) in Auto position
- Low/High Battery Voltage
- Engine in Cool Down Mode
- Battery Charger Failure
- Gen Breaker Fail to Close
- Gen Breaker Fail to Open

- Gen Breaker Protective Relay Alarm

The annunciator panel shall provide indication of the following signals for main system control:

- System Not in Auto
- PLC Failure
- Station Battery Failure
- Utility Source “A” Available
- Utility Source “B” Available
- Utility Source “A” Failed
- Utility Source “B” Failed
- Utility Source “A” Protective Relay Alarm
- Utility Source “B” Protective Relay Alarm
- Utility Breaker “A” Locked Out
- Utility Breaker “B” Locked Out
- Failure to Synchronize
- System General Alarm

The Annunciator Display shall be equipped with a fast pulse horn (rated 80-95 dbA at two feet), a Horn Silence Push-button and an Acknowledge Push-button. Any Pre-Alarm or Shutdown Alarm shall cause the Alarm Horn to sound until the Horn Silence button is depressed. Any subsequent alarms shall re-sound the horn. The display shall operate such that any alarm point shall “flash” until acknowledged.

10. Analog metering for each generator and utility source shall be 0.25% accuracy or better, 4” nominal, switchboard type with 270 degree full scale analog movement and inset digital display unless otherwise noted. Metering for each generator and utility shall be as follows:

    - Voltmeter, 0-5000V with 3 position phase selector switch for each generator.
    - Ammeter, 0-600A with 3 position phase selector switch for each generator
    - Frequency Meter, 57-63 Hz scale
    - Power Factor Meter 0.5 lag to 0.5 lead
    - Watt Meter, 0-2500kW
    - VAR Meter, 0-2500kVAR
    - Synchroscope, 360 degree movement, slow/fast (digital display not acceptable).

11. Panel mounted shorting blocks for all current transformers.

12. Panel mounted test switches for utility PTs to simulate utility power fail. Test switches shall be furnished with lockable covers.

13. Provide lamp test pushbuttons for all annunicators and pilot lights.

14. Provide system reset pushbutton.

15. Provide emergency stop pushbuttons for each generator.

The generator paralleling and transfer controls, generator engine control panel, and system PLC shall communicate over a CAN bus network.

The transfer controls shall be designed so that the system will automatically transfer to the generators in the event of a utility failure and back to utility after the utility source is restored weather the PLC is operational or not. The automatic generator synchronizing, paralleling, load sharing, and closed transition transfer operations shall be initiated using the transfer from/to utility pushbuttons weather the PLC is operational or not.

In the event the generators fail to synchronize with the utility and the utility voltage and frequency are within acceptable limits, the transfer controls shall automatically transfer back to utility in open transition mode after an adjustable time period.

C. System Alarms and Shutdowns

The following minimum conditions shall cause a generator power system shutdown as sensed by the protective relays and/or the control system (PLC).

1. Reverse Power Flow
2. Under frequency/overfrequency
3. Instantaneous/time overcurrent
4. Differential trip
5. Generator Breaker Failure
6. Engine overtemperature
7. Overspeed
8. Generator circuit breaker trip
9. Low diesel fuel
10. Low oil pressure

D. Input/Output Schedule

1. The following data shall be available from the generator PLC to the pump station PLC network via an Ether Net Network connection:

Description	**State/Span**
Generator 1 Running Status	ON/OFF
Generator 2 Running Status	ON/OFF
Generator 1 Voltage	0-4800V
Generator 2 Voltage	0-4800V
Generator 1 Current	0-500A
Generator 2 Current	0-500A
Generator 1 Real Power	0-3000kW

Generator 2 Real Power	0-3000kW
Generator 1 Reactive Power	0-3000kVAR
Generator 2 Reactive Power	0-3000kVAR
Generator 1 Apparent Power	0-3000kVA
Generator 2 Apparent Power	0-3000kVA
Generator 1 Real Energy	Total kWH
Generator 2 Real Energy	Total kWH
Generator 1 Reactive Energy	Total kVARH
Generator 2 Reactive Energy	Total kVARH
Generator 1 Apparent Energy	Total kVAH
Generator 2 Apparent Energy	Total kVAH
Generator 1 Power Factor	-90° - +90°
Generator 2 Power Factor	-90° - +90°
Generator 1 Frequency	0-65 Hz
Generator 2 Frequency	0-65 Hz
Generator 1 Total Harmonic Voltage Distortion	0-100%
Generator 2 Total Harmonic Voltage Distortion	0-100%
Generator 1 Total Harmonic Current Distortion	0-100%
Generator 2 Total Harmonic Current Distortion	0-100%
Generator 1 Coolant Temperature	0-300°F
Generator 2 Coolant Temperature	0-300°F
Generator 1 Breaker Status	OPEN/ CLOSED
Generator 2 Breaker Status	OPEN/ CLOSED
System General Fail	ON/OFF
Generator 1 Low Coolant Level	ON/OFF
Generator 1 Coolant High Temperature	ON/OFF
Generator 2 Coolant High Temperature	ON/OFF
Generator 1 Winding High Temperature	ON/OFF
Generator 2 Winding High Temperature	ON/OFF
Generator 1 Low Fuel Level	ON/OFF
Generator 2 Low Fuel Level	ON/OFF
Utility 1 Breaker Status	OPEN/ CLOSED
Utility 2 Breaker Status	OPEN/ CLOSED
Utility 1 Voltage	0-4800V
Utility 2 Voltage	0-4800V
Utility 1 Current	0-500A
Utility 2 Current	0-500A
Utility 1 Real Power	0-3000kW
Utility 2 Real Power	0-3000kW
Utility 1 Reactive Power	0-3000kVAR

Utility 2 Reactive Power	0-3000kVAR
Utility 1 Apparent Power	0-3000kVA
Utility 2 Apparent Power	0-3000kVA
Utility 1 Real Energy	Total kWH
Utility 2 Real Energy	Total kWH
Utility 1 Reactive Energy	Total kVARH
Utility 2 Reactive Energy	Total kVARH
Utility 1 Apparent Energy	Total kVAH
Utility 2 Apparent Energy	Total kVAH
Utility 1 Power Factor	0-1 Lead & 0-1 Lag
Utility 2 Power Factor	0-1 Lead & 0-1 Lag
Utility 1 Frequency	0-65 Hz
Utility 2 Frequency	0-65 Hz
Utility 1 Total Harmonic Voltage Distortion	0-100%
Utility 2 Total Harmonic Voltage Distortion	0-100%
Utility 1 Total Harmonic Current Distortion	0-100%
Utility 2 Total Harmonic Current Distortion	0-100%
Initiate Transfer to Standby Generators	Input from Plant PLC
Initiate Retransfer to Utility Power	Input from Plant PLC

2.04 SEQUQNCE OF OPERATIONS

A. Initial Conditions

1. Utility present. Utility breakers closed.

2. Generator Tie breakers open.

3. Pump station feeder breakers closed.

4. Generator breakers open.

5. Generators off.

B. Utility Power Failure

1. Initiate sequence when utility power source fails and the generator system control switch is in the auto mode.

2. Open utility breakers.

3. Start both generators.

4. When the first generator voltage and frequency is within acceptable limits, close generator breaker and connect to synchronizing bus. Synchronize the remaining generator(s) with the generator bus and close the generator circuit breaker(s) when voltage and frequency are within acceptable limits

5. Close the generator tie breakers.

6. Supply pump station load as required.

C. Return to Utility from Generator When in Utility Power Failure Mode (closed transition)

1. Initiate sequence automatically when utility bus voltage and frequency are within acceptable limits for an adjustable time delay, and the generator system control switch is in the Auto mode.

2. The system shall synchronize the generators with selected preferred utility source. Close preferred utility source circuit breaker when the generator bus voltage and frequency are within acceptable limits and synchronized with preferred utility source.

3. After an adjustable time delay has expired, softly unload the generators and open the generator tie breakers connecting the generator bus to preferred utility bus.

4. Open the tie breaker connecting the generator bus to the preferred utility bus.

5. After the generators are unloaded, open the generator breakers. The generator shall then run in an unloaded cool down mode for an adjustable time delay.

D. Transfer to Generator from Utility for Exercising (closed transition).

1. Initiate automatic sequence when the generator Manual-Off-Auto control switch is in “Auto” and the peak shave mode pushbutton is pushed, or when a remote signal is initiated via the PLC system.

2. Start both generators.

3. When the first generator voltage and frequency is within acceptable limits, close generator breaker and connect to synchronizing bus. Synchronize the remaining generator(s) with the generator bus and close the generator circuit breaker(s) when voltage and frequency are within acceptable limits

4. The system shall synchronize the generators with preferred utility bus.

5. Close the tie circuit breaker connecting the generator bus to the preferred utility bus when the generator bus voltage and frequency are within acceptable limits and synchronized with the preferred utility bus.

6. After an adjustable time delay has expired, softly load the generator.

7. Open the preferred utility circuit breaker.

E. Retransfer to Utility from Generator for Exercising (closed transition).

1. Initiate the retransfer to utility power by pressing the retransfer to utility power pushbutton on the generator switchgear or from any operator workstation at the at the pump station.

2. The system shall synchronize the generators with the preferred utility source. Close the preferred utility source circuit breaker when the generator bus voltage and frequency are within acceptable limits and synchronized with preferred utility bus.

3. Open the tie breaker connecting the generator bus to preferred utility bus.

4. After the generators are unloaded, open the generator breakers. The generator shall then run in an unloaded cool down mode for an adjustable time delay.

2.05 PRE-ENGINEERED POWER DISTRIBUTION CENTERS

A. Size - The pre-engineered power distribution center shall be sized to provide a minimum of 6 feet clearance from the front and each side of the switchgear to the interior wall.

B. Base - The base of the pre-engineered power distribution center shall be constructed of welded I-beams, channels, and angle supports, sized and reinforced to accommodate loading requirements. Skid beams shall be incorporated into the base of the building if the width exceeds 8 feet. When welding is complete, the base shall be cleaned and primed with zinc-chromate followed by a layer of bituminous undercoating. The base exterior shall be finished with an epoxy coating.

C. Floor - The floor shall be constructed of 1/4 inch steel plate welded to the base framework. Floor material shall be tread plate finished with ASA 61 skid resistant enamel. The underside of the floor shall be finished with a spray-on insulation material to prevent corrosion caused by condensation.

D. Wall Panels - Wall panel material shall be aluminum formed in an interlocking design which is self-framing and capable of withstanding wind loads of 125 mph. Panel thickness shall be 18 gauge.

E. Roof Panels - Roof panels shall be 14 gauge aluminum steel formed in a standing rib design eliminating the possibility of water entry and capable of withstanding snow loads of 40 psi.

F. Paint Finish - The pre-engineered power distribution center shall be painted with 3-5 mils of epoxy paint, providing a durable, corrosion-resistant finish. Exterior color shall be ANSI 61 light gray. Interior color shall be ANSI 61 light gray.

G. Insulation - The floor shall have 2 inch duct board (R11) insulation. The walls shall have 2 inch ductboard (R11) insulation. The roof shall have 2 inch ductboard (R11) insulation.

H. Lighting - Fluorescent lighting shall be provided in sufficient quantity to maintain 30 foot candles of illumination at floor level. Interior lighting shall be controlled by a 3-way light switch at each door along with a 120V convenience receptacle at each end. Indoor lights shall be totally enclosed and gaskted 4’ fluorescent lixtures. The switches shall be as specified in Section 16141. Outdoor light fixtures shall be installed over each enter/exit door. The outdoor lights shall be furnished with a photocell.

I. Doors - Entrance doors shall be double-wall construction with cellular neoprene gaskets, complete with aluminum panic bar, hardware, and door closers. A wire meshed tempered safety glass in each door shall be required. A door size of 3 feet wide by 7 feet high and a

door size of 3 feet wide by 7 feet high shall be provided at the ends of the pre-engineered power distribution center. A removable wall panel shall be installed to facilitate removal of large electrical equipment, as required. Removable rear equipment access doors to switchgear sections shall be installed so that switchgear sections can accessed from the outside of the power center. Aluminum stairs with handrails shall be installed a each enter/exit doorway as required. The power center concrete pad shall be extended under the stairs.

J. Louvers - Louvers shall be provided to allow air velocity not to exceed 350 FPM. Louvers shall be aluminum. Louvers shall be motor operated and interlocked with the exhaust fan. Filters shall be supplied with each louver and shall be made of expanded aluminum mesh and washable. Disposable fiberglass filters may be used in lieu of aluminum.

K. Exhaust Fan - Provide an exhaust fan sized to allow 30 air changes per hour. Provide a two-stage wall-mounted thermostat to control the exhaust fan set at 80 degrees F and 85 degrees F.

L. Emergency Lighting - Battery operated rechargeable emergency lighting, shall be furnished to provide minimum lighting for a person to exit in the event of total power failure.

M. Receptacles - Convenience receptacles shall be 125V, 15A, 2 pole, 3 wire grounded type. Duplex type receptacle shall be provided near each of the entrance doors. Receptacles shall also be located on interior or exterior walls. The devices shall be as specified in Section 16141.

N. A 30KVA, 120/208VAC combination power unit shall be provided to power all lighting, receptacles and ventilation within the enclosure. The unit shall be as specified in Section 16470. A 480VAC power panel shall also be provided as shown on the Drawings.

O. Conduit - Conduit shall be electrical metallic tubing and shall be installed in accordance with Section 16111.

P. Wire - Wire shall be 600 VAC, Type THHN/THWN, No. 12 AWG (minimum) for power, No. 14 AWG (minimum) for control in accordance with Section 16123.

Q. Environmental heating and air conditioning equipment shall be provided to maintain comfortable temperature levels. Two (2) air conditioning units shall be furnished and sized to adequately cool the interior of the power center with all equipment operating and an outside ambient air temperature of 40°C. Air conditioning units shall be wall mounted. Air conditioning units shall be supplied from either of the panelboards inside the power center. The power center manufacturer shall furnish and install all power and control wire and conduit for the air conditioning units.

PART 3 -- EXECUTION

3.01 INSTALLATION

A. The switchgear shall be furnished and installed as shown on the Drawings and in accordance with the manufacturer's recommendations and installation instructions. One (1) copy of these instructions shall be included with the equipment at time of shipment. The

equipment shall be suitably protected with space heaters connected until accepted by the Owner.

B. Furnish and install structural mounting channels in accordance with manufacturer's recommendations to provide proper alignment of the units.

C. The equipment shall be installed and checked in accordance with the manufacturer's recommendations. This shall include, but not be limited to:

1. Checking to ensure that the pad location is level to within .125 inches every three (3) feet in any direction.

2. Checking to ensure that all bus bars are torqued to the manufacturer's recommendations.

3. Assemble all shipping sections, remove all shipping braces and connect all shipping split mechanical and electrical connections.

4. Secure assemblies to foundation or floor channels.

5. Measure and record High-Pot readings phase-to-phase, phase-to-ground, and neutral-to-ground (four-wire systems only).

6. Inspect and install all circuit breakers in their proper compartments.

D. Install the switchgear to allow complete unit door swing required for unit removal. This is specifically required where a vertical section of switchgear is set next to a wall to the left of a switchgear section.

E. The Contractor shall furnish and install all conduit and wire required to provide main, tie, and feeder breaker positions (open, closed) and breaker "TRIPPED" signals as inputs to the pump station control system.

3.02 PAINTING

A. Prior to final completion of the work, all metal surfaces of the equipment shall be cleaned thoroughly, and all scratches and abrasions shall be retouched with the same coating as used for factory finishing coats.

3.03 RUBBER MATS

A. A three foot wide rubber mat shall be furnished and installed on the floor and in front of the switchgear assembly. The mat shall be long enough to cover the full length of the equipment line-up. The mat shall be 1/4 inch thick with beveled edges, canvas back, solid type with corrugations running the entire length of the mat. The mat shall be guaranteed extra quality, free from cracks, blow holes or other defects detrimental to their mechanical or electrical strength. The mat shall meet OSHA requirements and the requirements of ANSI/ASTM D-178 J6-7 for Type 2, Class 2 insulating matting.

3.04 FIELD ADJUSTMENTS

A. The protective relays shall be set in the field by a qualified representative of the manufacturer or outside testing company, retained by the Contractor, in accordance with the settings designated in the Coordination Study of the system as required elsewhere in these Specifications.

3.05 MANUFACTURER'S CERTIFICATION

A. A qualified, factory-trained manufacturer's representative shall certify in writing that the equipment has been installed, adjusted, and tested in accordance with the manufacturer's recommendations.

- END OF SECTION -

SECTION 17550

PANEL INSTRUMENTS AND ACCESSORIES

PART 1 -- GENERAL

1.01 THE REQUIREMENT

A. The Contractor shall furnish, test, install and place in satisfactory operation the panel instruments and accessories, with all spare parts, accessories, and appurtenances as specified herein and as shown on the Drawings.

1.02 RELATED WORK SPECIFIED ELSEWHERE

A. Section 17000 – Control and Information System Scope and General Requirements

B. Section 17100 – Control and Information System Hardware, General

C. Section 17500 – Enclosures, General

1.03 GENERAL INFORMATION AND DESCRIPTION

A. All equipment mounted on the face of a panel shall conform to the same NEMA rating specified for the panel construction.

1.04 TOOLS, SUPPLIES AND SPARE PARTS

A. Tools, supplies and spare parts shall be provided as specified in Section 17050 - Tools, Supplies and Spare Parts. In addition, the following specific spare parts items shall be provided:

1. One of each type of panel mounted equipment (i.e., indicators, signal converters, etc.) provided under this Contract.

2. Five of each type of interposing relay provided under this Contract.

PART 2 -- PRODUCTS

2.01 ELECTRONIC INDICATORS

A. Electronic indicators shall be 3.5 or 6 digit, as appropriate, with 0.56" high red LED display. Indicators shall be provided with nameplate and scale calibrated to match the calibration of the primary element. The unit shall be designed primarily for use with 4-20 mA current loop signal circuits. Indicator operating voltage shall be 115 VAC 10%, 60 Hz. Indicator controls shall include three (3) front-panel pushbuttons for modifying alarm values and other indicator setup. Two (2) form-C relays shall be provided for each indicator. Relay contact outputs shall be rated 5A, 120/240 VAC, resistive load. Where required, a regulated and isolated 24 V excitation power supply shall be provided. Indicators shall be Red Lion Model IMP or APLCL, or equal.

2.02 SIGNAL CONVERTERS

A. Signal converters shall be provided as required to provide control functions and to interface instrumentation and controls, equipment panels, motor control centers and other instrumentation and controls supplied under other Divisions to the controls provided herein.

B. General Requirements – Converters shall be of the miniature type, utilizing all solid state circuitry suitable for mounting within new or existing cabinetry. Where sufficient cabinet space is not available, sub panels or supplemental enclosures shall be provided. Power supply shall be 120V, 60 hertz where required by the converter. Repeatability shall be 0.1% of span, deadband shall be 0.1% span, maximum. Where specific converters are not listed, but are required to interface with the process control system, they shall comply with the general requirements stated herein.

C. Current to Current Isolators – Current to current isolators shall be furnished where necessary to provide an isolated current loop, calculations or signal amplification between the plant process control system and instrumentation and control loops. Isolators shall be sized such that resistance of existing loops shall not exceed maximum rated resistance. Isolators shall be as manufactured by AGM, Moore Industries, Rochester Instrument Systems (RIS), or equal.

D. Voltage to Current Transducers – Voltage to current (or current to voltage) transducers shall convert a voltage signal of one magnitude to a 4-20 milliamp DC current signal. The output current shall be directly proportional to the input signal voltage. Transducers shall be sized such that loop resistance does not exceed maximum rated resistance. Transducers shall be as manufactured by AGM, Moore Industries, Rochester Instrument Systems (RIS), or equal.

E. Frequency to Current Transducers – Frequency to current transducers shall convert pulse-rate and pulse-duration signals to 4-20 mA, 24 VDC analog signals. Converters shall include field-adjustable input frequency range. Converter power shall be 120 VAC, 60 hertz. Transducers shall be sized such that loop resistance does not exceed maximum rated resistance. Transducers shall be suitable for signal transmission via leased telephone lines. Transducers shall be Timeverter as manufactured by AGM, Moore Industries equivalent, Rochester Instrument Systems (RIS) equivalent, or equal.

F. Current to Frequency Transducers – Current to frequency transducers shall convert 4-20 mA, 24 VDC analog signals to pulse-rate and pulse-duration signals. Converters shall include field-adjustable output frequency range. Converter power shall be 120 VAC, 60 hertz. Transducers shall be sized such that loop resistance does not exceed maximum rated resistance. Transducers shall be suitable for signal transmission via leased telephone lines. Transducers shall be Quantimer as manufactured by AGM, Moore Industries equivalent, Rochester Instrument Systems (RIS) equivalent, or equal.

G. Integrators – Integrators shall be provided as interchangeable plug-in modules with zero and span adjustment available on the front plate of the units. Output shall range from 0 to 0.1 through 0 to 10 pulses per second. Accuracy shall be $\pm$ 0.1% of input span. Integrators shall convert linear analog signals to pulse rate and provide a solid-state output. Integrators shall be as manufactured by AGM Electronics, Moore Industries, Rochester Instrument Systems (RIS), or equal.

H. Electronic Switches (Alarm Relays) – Electronic switches shall be furnished with a calibrated dial for adjusting set points. The input to the switch shall be 4-20 mADC, and the set point shall be adjustable over the full range. Unless otherwise noted, the dead band shall be fixed at less than 2 percent of span. The set point stability shall be ±0.1% per degree F. The repeatability shall be ±0.1% of span. The units shall be furnished with SPDT relays rated at 10 amperes at 115 VAC. Electronic switches shall be as manufactured by AGM, Moore Industries, Rochester Instrument Systems (RIS), or equal.

I. RTD to Current Signal Converters – RTD to current signal converters shall convert a 3-wire RTD input signal to an isolated 4-20 mADC output signal. Each converter shall operate from a 120 VAC power source. Accuracy shall be 0.10 percent of span or better. Calibrated span of each converter shall be as indicated on the instrument list. The Contractor shall coordinate calibration of the signal converters with existing RTD elements. The signal converters shall be furnished in the manufacturer's standard enclosure for installation in an existing indoor electrical cabinet. Signal converters shall be as manufactured by AGM, Moore Industries, Rochester Instrument Systems (RIS), or equal.

J. Interposing Relays – Where required to interface between motor control centers, equipment controls, and control panels, interposing relays and associated control wiring circuitry shall be furnished and installed to provide the monitoring and/or control functions specified herein. Interposing relays shall be miniature type, DPDT, minimum 10 amp, 120 VAC contact rating. Relay coils shall be 120 VAC or 24 VDC as required. Relays shall be Type KU as manufactured by Square D, Potter & Brumfield, Allen-Bradley, or equal.

K. Timing Relays – Timing Relays (TR) shall be the general purpose plug-in type, Type JCK as manufactured by Square D Company, Cutler-Hammer/Westinghouse Electric Corporation equivalent, Allen-Bradley equivalent, or equal. Timing relays shall be electronic type with 120 VAC coils unless otherwise specified or indicated on the Drawings. Timers shall be provided with a minimum of two SPDT timed output contacts and instantaneous contacts where required. Contact ratings shall be the same as for interposing relays as specified above.

L. Intrinsically Safe Relays and Barriers – Intrinsically safe relays and barriers shall be provided where required to interface with equipment such as float level switches that are located in NFPA-classified hazardous areas. Intrinsically safe relays and barriers shall be FM approved and shall be manufactured by Pepperl and Fuchs, Crouse Hinds, Square D, or equal.

2.03 ACCESSORIES

A. Control operators such as pushbuttons (PB), selector switches (SS), and pilot lights (PL) shall be Cutler-Hammer/Westinghouse Type E34, Square D Company Type SK, or equal. Control operators shall be 30.5 mm, round, heavy-duty, oil tight NEMA 4X corrosion resistant.

B. Pushbuttons shall be non-illuminated, spring release type. Pushbuttons shall include a full guard. Panic stop/alarm pushbuttons shall be red mushroom type with manual-pull release. Selector switches shall be non-illuminated, maintained contact type. Pilot lights shall be of the proper control voltage, LED type with light lens colors shall be as specified below.

Color	Function

Red	Running (Open)
Green	Stopped or Off (Closed)
Amber	Fault
White	Other

C. Control operators shall have legend plates as specified herein, indicated on the Drawings, or otherwise directed by the Engineer. Legend plates shall be plastic, black field (background) with white lettering. Engraved nameplates shall be securely fastened above each control operator. If adequate space is not available, the nameplate shall be mounted below the operator.

D. Control operators for all equipment shall be as specified herein and of the same type and manufacturer unless otherwise specified or indicated on the Drawings.

E. Alarm horns shall be general-purpose type, flush panel mount, 115 VAC power supply or 24 VDC power supply, suitable for indoor or weatherproof service, as required. Volume shall be adjustable.

PART 3 -- EXECUTION

3.01 REQUIREMENTS

A. Refer to Section 17500 for additional requirements.

- END OF SECTION -

SECTION 17920

CONTROL SYSTEM INPUT/OUTPUT LIST

PART 1 -- GENERAL

1.01 THE REQUIREMENT

A. The Contractor shall furnish, test, install, and place in satisfactory operation all instrumentation as herein specified and as shown on the Drawings.

1.02 RELATED WORK SPECIFIED ELSEWHERE

A. Section 17950 - Functional Control Descriptions

PART 2 -- CONTROL SYSTEM INPUT / OUTPUT LIST

Service Description	State/Span	Type	Remarks	PLC
Influent Manhole Gate SLG-100	Remote	DI		RRPS
Influent Manhole Gate SLG-100	Opened	DI		RRPS
Influent Manhole Gate SLG-100	Closed	DI		RRPS
Influent Manhole Gate SLG-100	Open	DO		RRPS
Influent Manhole Gate SLG-100	Close	DO		RRPS
Wet Well No.1 Influent Gate SLG-111	Remote	DI		RRPS
Wet Well No.1 Influent Gate SLG-111	Opened	DI		RRPS
Wet Well No.1 Influent Gate SLG-111	Closed	DI		RRPS
Wet Well No.1 Influent Gate SLG-111	Open	DO		RRPS
Wet Well No.1 Influent Gate SLG-111	Close	DO		RRPS
Wet Well No.2 Influent Gate SLG-112	Remote	DI		RRPS
Wet Well No.2 Influent Gate SLG-112	Opened	DI		RRPS
Wet Well No.2 Influent Gate SLG-112	Closed	DI		RRPS
Wet Well No.2 Influent Gate SLG-112	Open	DO		RRPS
Wet Well No.2 Influent Gate SLG-112	Close	DO		RRPS
Wet Well Chopper Pump SW-P-1	Run	DI		RRPS
Wet Well Chopper Pump SW-P-1	Auto	DI		RRPS
Wet Well Chopper Pump SW-P-1	Fail	DI		RRPS
Wet Well Chopper Pump SW-P-2	Run	DI		RRPS
Wet Well Chopper Pump SW-P-2	Auto	DI		RRPS
Wet Well Chopper Pump SW-P-2	Fail	DI		RRPS
Influent Pump INF-P-1A	Run	DI		RRPS
Influent Pump INF-P-1A	Auto	DI		RRPS
Influent Pump INF-P-1A	Fail	DI		RRPS
Influent Pump INF-P-1A	VFD Fault	DI		RRPS
Influent Pump INF-P-1A	Start/Stop	DO		RRPS

Service Description	State/Span	Type	Remarks	PLC
Influent Pump INF-P-1A Speed Control	Auto	DI		RRPS
Influent Pump INF-P-1A Speed Feedback	0-100%	AI		RRPS
Influent Pump INF-P-1A Speed Control	0-100%	AO		RRPS
Influent Pump INF-P-1A Motor Current		AI		RRPS
Influent Pump INF-P-1A Vibration	High	DI		RRPS
Influent Pump INF-P-1A Check Valve Position	Opened	DI		RRPS
Influent Pump INF-P-1B	Run	DI		RRPS
Influent Pump INF-P-1B	Auto	DI		RRPS
Influent Pump INF-P-1B	Fail	DI		RRPS
Influent Pump INF-P-1B	VFD Fault	DI		RRPS
Influent Pump INF-P-1B	Start/Stop	DO		RRPS
Influent Pump INF-P-1B Speed Control	Auto	DI		RRPS
Influent Pump INF-P-1B Speed Feedback	0-100%	AI		RRPS
Influent Pump INF-P-1B Speed Control	0-100%	AO		RRPS
Influent Pump INF-P-1B Motor Current		AI		RRPS
Influent Pump INF-P-1B Vibration	High	DI		RRPS
Influent Pump INF-P-1B Check Valve Position	Opened	DI		RRPS
Influent Pump INF-P-1C	Run	DI		RRPS
Influent Pump INF-P-1C	Auto	DI		RRPS
Influent Pump INF-P-1C	Fail	DI		RRPS
Influent Pump INF-P-1C	VFD Fault	DI		RRPS
Influent Pump INF-P-1C	Start/Stop	DO		RRPS
Influent Pump INF-P-1C Speed Control	Auto	DI		RRPS
Influent Pump INF-P-1C Speed Feedback	0-100%	AI		RRPS
Influent Pump INF-P-1C Speed Control	0-100%	AO		RRPS
Influent Pump INF-P-1C Motor Current		AI		RRPS
Influent Pump INF-P-1C Vibration	High	DI		RRPS
Influent Pump INF-P-1C Check Valve Position	Opened	DI		RRPS
Influent Pump INF-P-2A	Run	DI		RRPS
Influent Pump INF-P-2A	Auto	DI		RRPS
Influent Pump INF-P-2A	Fail	DI		RRPS
Influent Pump INF-P-2A	VFD Fault	DI		RRPS
Influent Pump INF-P-2A	Start/Stop	DO		RRPS
Influent Pump INF-P-2A Speed Control	Auto	DI		RRPS
Influent Pump INF-P-2A Speed Feedback	0-100%	AI		RRPS
Influent Pump INF-P-2A Speed Control	0-100%	AO		RRPS
Influent Pump INF-P-2A Motor Current		AI		RRPS
Influent Pump INF-P-2A Vibration	High	DI		RRPS
Influent Pump INF-P-2A Check Valve Position	Opened	DI		RRPS
Influent Pump INF-P-2B	Run	DI		RRPS
Influent Pump INF-P-2B	Auto	DI		RRPS
Influent Pump INF-P-2B	Fail	DI		RRPS
Influent Pump INF-P-2B	VFD Fault	DI		RRPS
Influent Pump INF-P-2B	Start/Stop	DO		RRPS
Influent Pump INF-P-2B Speed Control	Auto	DI		RRPS
Influent Pump INF-P-2B Speed Feedback	0-100%	AI		RRPS
Influent Pump INF-P-2B Speed Control	0-100%	AO		RRPS
Influent Pump INF-P-2B Motor Current		AI		RRPS
Influent Pump INF-P-2B Vibration	High	DI		RRPS
Influent Pump INF-P-2B Check Valve Position	Opened	DI		RRPS

Service Description	State/Span	Type	Remarks	PLC
Influent Pump INF-P-2C	Run	DI		RRPS
Influent Pump INF-P-2C	Auto	DI		RRPS
Influent Pump INF-P-2C	Fail	DI		RRPS
Influent Pump INF-P-2C	VFD Fault	DI		RRPS
Influent Pump INF-P-2C	Start/Stop	DO		RRPS
Influent Pump INF-P-2C Speed Control	Auto	DI		RRPS
Influent Pump INF-P-2C Speed Feedback	0-100%	AI		RRPS
Influent Pump INF-P-2C Speed Control	0-100%	AO		RRPS
Influent Pump INF-P-2C Motor Current		AI		RRPS
Influent Pump INF-P-2C Vibration	High	DI		RRPS
Influent Pump INF-P-2C Check Valve Position	Opened	DI		RRPS
Wet Well No.1 Level A		AI	LT-153	RRPS
Wet Well No.1 Level B		AI	LIT-151	RRPS
Wet Well No.2 Level A		AI	LT-154	RRPS
Wet Well No.2 Level B		AI	LIT-152	RRPS
Dry Well No.1 Pump Header Pressure		AI	PIT-231	RRPS
Dry Well No.2 Pump Header Pressure		AI	PIT-233	RRPS
Dry Well No. 1 Sump Pump	Run	DI		RRPS
Dry Well No. 1 Sump Pump	Fail	DI		RRPS
Dry Well No.1 Sump Level	Flooded	DI		RRPS
Dry Well No. 2 Sump Pump	Run	DI		RRPS
Dry Well No. 2 Sump Pump	Fail	DI		RRPS
Dry Well No.2 Sump Level	Flooded	DI		RRPS
Influent Pump INF-P-1A Discharge Valve MOV-221	Remote	DI		RRPS
Influent Pump INF-P-1A Discharge Valve MOV-221	Opened	DI		RRPS
Influent Pump INF-P-1A Discharge Valve MOV-221	Closed	DI		RRPS
Influent Pump INF-P-1A Discharge Valve MOV-221	Open	DO		RRPS
Influent Pump INF-P-1A Discharge Valve MOV-221	Close	DO		RRPS
Influent Pump INF-P-1B Discharge Valve MOV-222	Remote	DI		RRPS
Influent Pump INF-P-1B Discharge Valve MOV-222	Opened	DI		RRPS
Influent Pump INF-P-1B Discharge Valve MOV-222	Closed	DI		RRPS
Influent Pump INF-P-1B Discharge Valve MOV-222	Open	DO		RRPS
Influent Pump INF-P-1B Discharge Valve MOV-222	Close	DO		RRPS
Influent Pump INF-P-1C Discharge Valve MOV-223	Remote	DI		RRPS
Influent Pump INF-P-1C Discharge Valve MOV-223	Opened	DI		RRPS
Influent Pump INF-P-1C Discharge Valve MOV-223	Closed	DI		RRPS
Influent Pump INF-P-1C Discharge Valve MOV-223	Open	DO		RRPS
Influent Pump INF-P-1C Discharge Valve MOV-223	Close	DO		RRPS
Influent Pump INF-P-2A Discharge Valve MOV-224	Remote	DI		RRPS
Influent Pump INF-P-2A Discharge Valve MOV-224	Opened	DI		RRPS
Influent Pump INF-P-2A Discharge Valve MOV-224	Closed	DI		RRPS
Influent Pump INF-P-2A Discharge Valve MOV-224	Open	DO		RRPS
Influent Pump INF-P-2A Discharge Valve MOV-224	Close	DO		RRPS
Influent Pump INF-P-2B Discharge Valve MOV-225	Remote	DI		RRPS

Service Description	State/Span	Type	Remarks	PLC
Influent Pump INF-P-2B Discharge Valve MOV-225	Opened	DI		RRPS
Influent Pump INF-P-2B Discharge Valve MOV-225	Closed	DI		RRPS
Influent Pump INF-P-2B Discharge Valve MOV-225	Open	DO		RRPS
Influent Pump INF-P-2B Discharge Valve MOV-225	Close	DO		RRPS
Influent Pump INF-P-2C Discharge Valve MOV-226	Remote	DI		RRPS
Influent Pump INF-P-2C Discharge Valve MOV-226	Opened	DI		RRPS
Influent Pump INF-P-2C Discharge Valve MOV-226	Closed	DI		RRPS
Influent Pump INF-P-2C Discharge Valve MOV-226	Open	DO		RRPS
Influent Pump INF-P-2C Discharge Valve MOV-226	Close	DO		RRPS
Odor Control Supply Fan	Run	DI		RRPS
Odor Control Supply Fan	Auto	DI		RRPS
Odor Control Supply Fan	Fail	DI		RRPS
Odor Control Supply Fan	Start/Stop	DO		RRPS
Odor Control Supply Fan	Run Status	DO		RRPS
Odor Control Supply Fan	Fail Status	DO		RRPS
Odor Control Exhaust Fan	Run	DI		RRPS
Odor Control Exhaust Fan	Auto	DI		RRPS
Odor Control Exhaust Fan	Fail	DI		RRPS
Odor Control Exhaust Fan	Start/Stop	DO		RRPS
Odor Control Exhaust Fan	Run Status	DO		RRPS
Odor Control Exhaust Fan	Fail Status	DO		RRPS
Odor Control Exhaust Fan Suction Vacuum Pressure	High	DI		RRPS
Odor Control Exhaust Fan Discharge Pressure	High	DI		RRPS
Odor Control System	Run	DI		RRPS
Odor Control System	Dail	DI		RRPS
Sodium Hypochlorite Storage Tank Level		AI		RRPS
Sodium Hydroxide Storage Tank Level		AI		RRPS
Carbon Scrubber System	Fail	DI		RRPS
Chemical Fill Station Eyewash/Shower	In Use	DI		RRPS
Odor Scrubber Eyewash/Shower	In Use	DI		RRPS
Seal Water System No.1	Common Fail	DI		RRPS
Seal Water System No.1	Start/Stop	DO		RRPS
Seal Water Pump SW-P-1A	Run	DI		RRPS
Seal Water Pump SW-P-1A	Auto	DI		RRPS
Seal Water Pump SW-P-1B	Run	DI		RRPS
Seal Water Pump SW-P-1B	Auto	DI		RRPS
Seal Water System No.2	Common Fail	DI		RRPS
Seal Water System No.2	Start/Stop	DO		RRPS
Seal Water Pump SW-P-2A	Run	DI		RRPS
Seal Water Pump SW-P-2A	Auto	DI		RRPS
Seal Water Pump SW-P-2B	Run	DI		RRPS
Seal Water Pump SW-P-2B	Auto	DI		RRPS
Roll-Up Door Intrusion	Alarm	DI		RRPS

Service Description	State/Span	Type	Remarks	PLC
East Door Intrusion	Alarm	DI		RRPS
North Door Intrusion	Alarm	DI		RRPS
Window Intrusion	Alarm	DI		RRPS
Gate Entry	Alarm	DI		RRPS
Wet Well No.1 Ventilation Air Flow	Low	DI	FSL-221	RRPS
Wet Well No.2 Ventilation Air Flow	Low	DI	FSL-222	RRPS
Fire Alarm Panel	Trouble	DI		RRPS
Electrical Room Temperature	High	DI	TSHH-223	RRPS

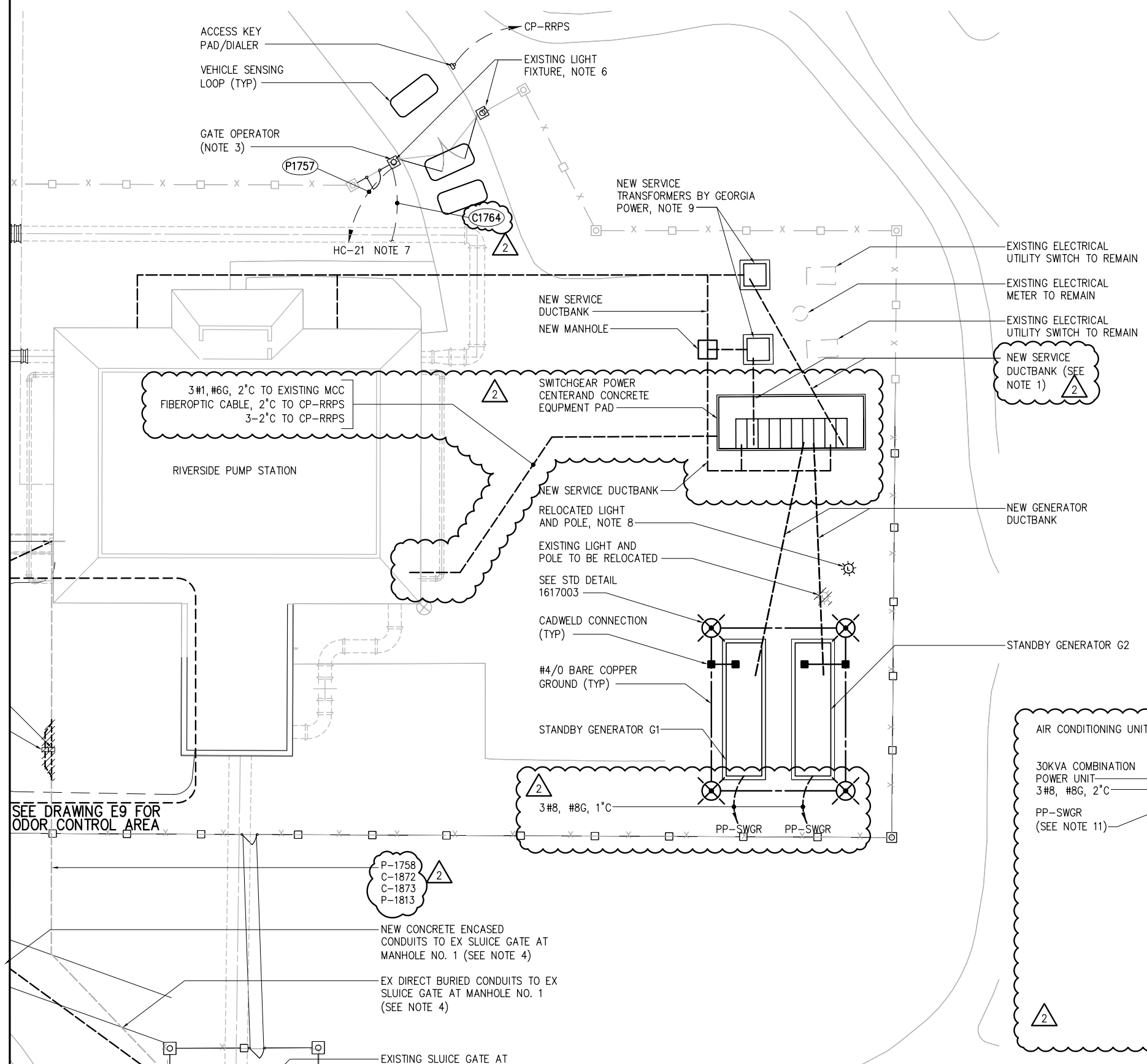

NOTES:

1. THE CONTRACTOR SHALL FURNISH AND INSTALL THE FOLLOWING ADDITIONAL WIRE AND CONDUIT FROM EACH GENERATOR TO THE EQUIPMENT INDICATED BELOW:
   - 14#10, #12G, 2"C TO PARALLELING SWTICHGEAR
   - 8-TTS, 2"C TO PARALLELING SWITCHGEAR
   - 3#8, #8G, 1"C TO PP-SWGR
   - NETWORK CABLE AS REQUIRED, 2"C TO PARALLELING SWITCHGEAR
   - 3-2" EMPTY CONDUITS TO PARALLELING SWITCHGEAR

2. INSTALL FIXTURES WHERE SHOWN AT TOP OF BUILDING WALL NEAR SOFFET. PROVIDE A WEATHER PROOF SWITCH TO CONTROL FIXTURES AS SHOWN. PROVIDE 2#10, 1#10 GND IN 3/4" CONDUIT.

3. PROVIDE POWER TO GATE CONTROLLER AS SHOWN. INSTALL DETECTOR LOOPS PER MANUFACTURER'S INSTRUCTIONS. PROVIDE CONDUIT AND WIRING AS REQUIRED FOR A COMPLETE INSTALLATION, INCLUDING EMBEDDED DETECTOR LOOPS AND KEY PAD.

4. APPROXIMATE LOCATION OF EXISTING DUCTBANK TO SLUICE GATE AT MANHOLE NO.1. RELOCATE THE EXISITNG DUCT BANK AS REQUIRED PRIOR TO INSTALLATION OF THE ODOR CONTROL SYSTEM TO AVOID CONFLICTS WITH THE NEW EQUIPMENT AND CONCRETE PADS. EXTEND EXISTING CIRCUITS AS REQUIRED FOR NEW ROUTE.

5. REMOVE EXISTING GROUND RING WHERE NEW WORK WILL BE INSTALLED. PROVIDE NEW GROUND RING AS SHOWN. ATTACH TO EXISTING RING. GROUND RING SHALL BE 4/0 AWG BARE CU. BURY AT A DEPTH OF 2'-6" BELOW GRADE. INSTALL A 5/8" X 10' GROUND ROD WHERE SHOWN. CADWELD ALL CONNECTIONS.

6. RELOCATE THE TWO LIGHT FIXTURES AT THE FRONT ENTRANCE GATE TO NEW POSITIONS SHOWN. EXTEND EXISTING CIRCUIT AS REQUIRED TO NEW LOCATIONS.

7. PROVIDE AND INSTALL 3/4" CONDUIT FROM GATE CONTROLLER TO CP-RRPS IN ELECTRICAL ROOM.

8. EXTEND EXISTING CIRCUIT AS REQUIRED TO NEW LOCATION.

9. REPLACE EXISTING CONCRETE PAD WITH NEW CONCRETE PAD SIZED TO FIT NEW SERVICE TRANSFORMERS FROM GEORGIA POWER.

10. SEE CONDUIT & WIRE SCHEDULE DWGS E15 & E16 FOR CIRCUITS REQUIRED IN NEW DUCTBANKS.

11. PP-SWGR SHALL BE A 100A, 480VAC, 3-PHASE, 3-WIRE, NEMA-1, SURFACE MOUNTED, 30 CIRCUIT PANELBOARD WITH THE FOLLOWING CIRCUIT BREAKERS INSTALLED AS A MINIMUM:
    - 2-40AT 3-POLE CIRCUIT BREAKERS
    - 2-30AT 3-POLE CIRCUIT BREAKERS
    - 2-20AT 3-POLE CIRCUIT BREAKERS

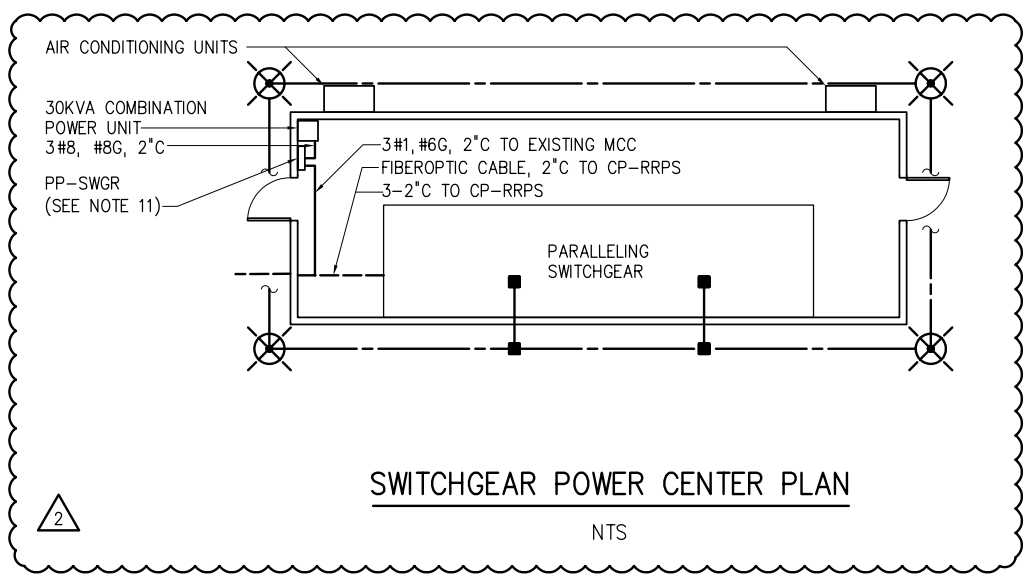

SWITCHGEAR POWER CENTER PLAN

NTS

REFER TO CONTRACT DRAWING NUMBER E2

SHEET 1 OF 1

H & S JOB NUMBER 30039

CONTRACT NUMBER .

Electrical Site Plan

RIVERSIDE ROAD PUMP STATION UPGRADES

575 RIVERSIDE ROAD, ROSWELL GA. 30075

DATE 01-07-08

BY H & S

ADDENDUM NO. 4

ATTACHMENT NO. ESK-1

01/07/08 11:21am FILE= O:\30039\Drawings\Instrumentation\Instrmentation Sketch 1 by CPLANTER XREF FILE = NONE

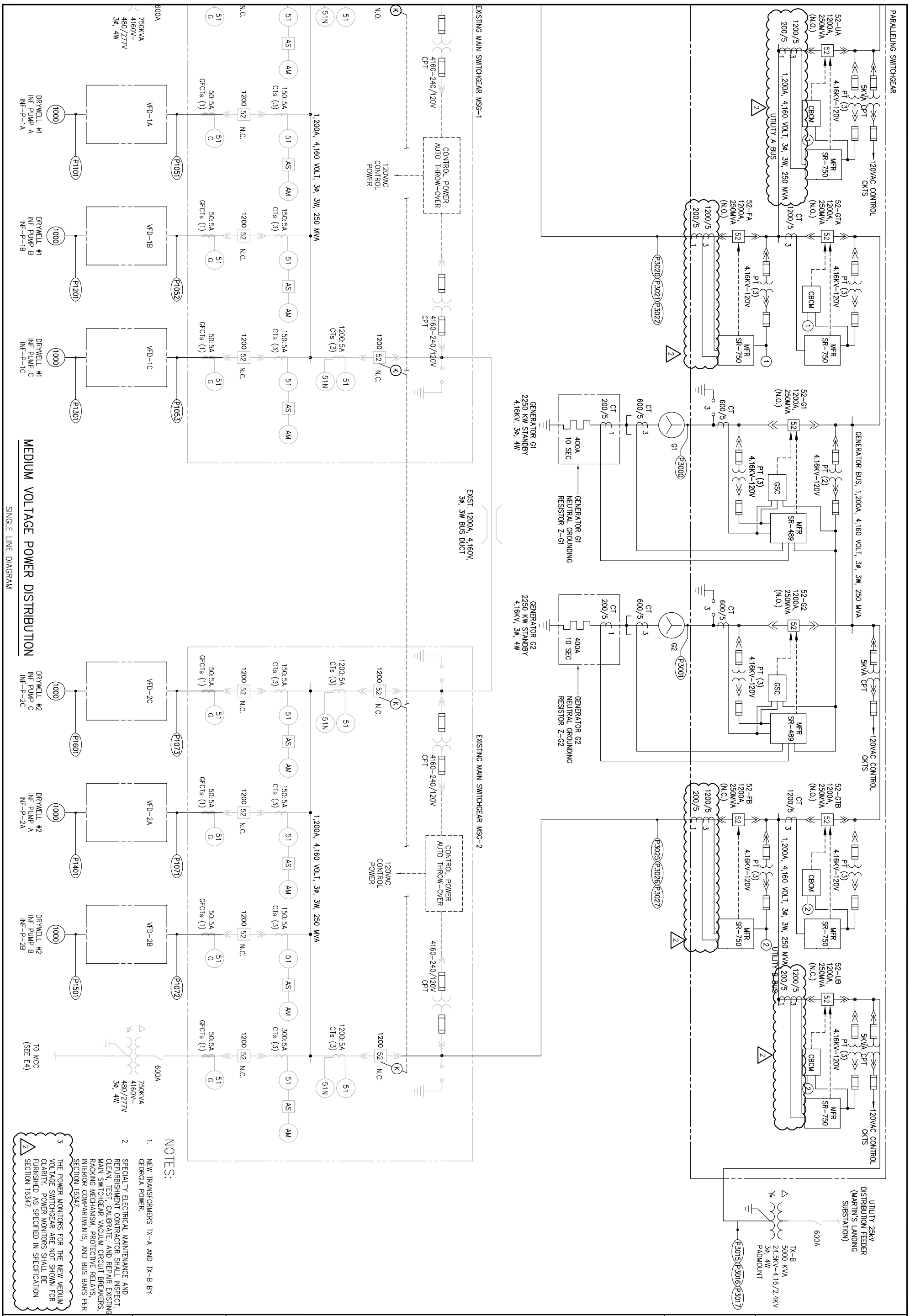

MEDIUM VOLTAGE POWER DISTRIBUTION

SINGLE LINE DIAGRAM

NOTES:

1. NEW TRANSFORMERS TX-A AND TX-B BY GEORGIA POWER.
2. SPECIALTY ELECTRICAL MAINTENANCE AND REFURBISHMENT CONTRACTOR SHALL INSPECT, CLEAN, TEST, CALIBRATE, AND REPAIR EXISTING MAIN SWITCHGEAR VACUUM CIRCUIT BREAKERS, RACKING MECHANISM, PROTECTIVE RELAYS, INTERIOR COMPARTMENTS, AND BUS BARS PER SECTION 16347.
3. THE POWER MONITORS FOR THE NEW MEDIUM VOLTAGE SWITCHGEAR ARE NOT SHOWN FOR CLARITY. POWER MONITORS SHALL BE FURNISHED AS SPECIFIED IN SPECIFICATION SECTION 16347.

ADDENDUM NO.	DATE	Electrical Medium Voltage Single Line Diagram	H & S JOB NUMBER	REFER TO CONTRACT DRAWING NUMBER
4	01-07-08		30039	E3
ATTACHMENT NO.	BY	RIVERSIDE ROAD PUMP STATION UPGRADES 575 RIVERSIDE ROAD, ROSWELL GA. 30075	CONTRACT NUMBER	SHEET 1 OF 1
ESK-2	H & S			

01/07/08 11:21am FILE= O:\30039\Drawings\Instrumentation\Instrmentation Sketch 1 by CPLANTER XREF FILE = NONE

NOTES

1. REMOVE THE FOLLOWING EQUIPMENT STARTER OR CIRCUIT BREAKER AS WELL AS ASSOCIATED CIRCUIT:
   SUPPLY FAN SF-3
   DRY WELL #1 SEAL WATER PUMP A
   DRY WELL #1 SEAL WATER PUMP B
   BAR SCREEN #1
   SUPPLY FAN SF-2
   SCRUBBER
   SUPPLY FAN SF-1
   BARSCREEN #2
   DRY WELL #2 SEAL WATER PUMP A
   DRY WELL #2 SEAL WATER PUMP B
   WET WELL #1 PUMP
   WET WELL #2 PUMP
   REMOVE ANY SPARE STARTER OR CIRCUIT BREAKER AS REQUIRED FOR NEW EQUIPMENT. SEE MCC ELEVATION FOR LAYOUT.
2. PROVIDE NEW STARTERS OR CIRCUIT BREAKERS FOR THE FOLLOWING EQUIPMENT SHOWN ON THE ONE LINE DIAGRAM PROVIDE NEW NAMEPLATES FOR THE MCC BUCKETS AS REQUIRED:
   GRINDER #1 LCP
   GRINDER #2 LCP
   GRINDER #3 LCP
   DRYWELL #1 SUMP PUMP CP
   DRYWELL #2 SUMP PUMP CP
   SEAL WATER SYSTEM #1
   SEAL WATER SYSTEM #2
   ODOR CONTROL EXHAUST FAN
   ODOR CONTROL SUPPLY FAN
   ODOR CONTROL PANEL
   SUBMERSIBLE CHOPPER PUMP #1
   SUBMERSIBLE CHOPPER PUMP #2
   AHU-1
   AHU-2
   CU-1
   CU-2
   EXHAUST FAN EF-A
   EXHAUST FAN EF-B
   SUPPLY FAN SF-A
   SUPPLY FAN SF-B
   POWER PANEL PP-SWGR (2)
3. CIRCUIT BREAKERS FOR AHU-1&2 AND CU-1&2 SHALL BE HACR RATED.
4. ALL DISCONNECT SWITCHES SHALL BE STAINLESS STEEL.

EXISTING MCC ELEVATION MODIFIED

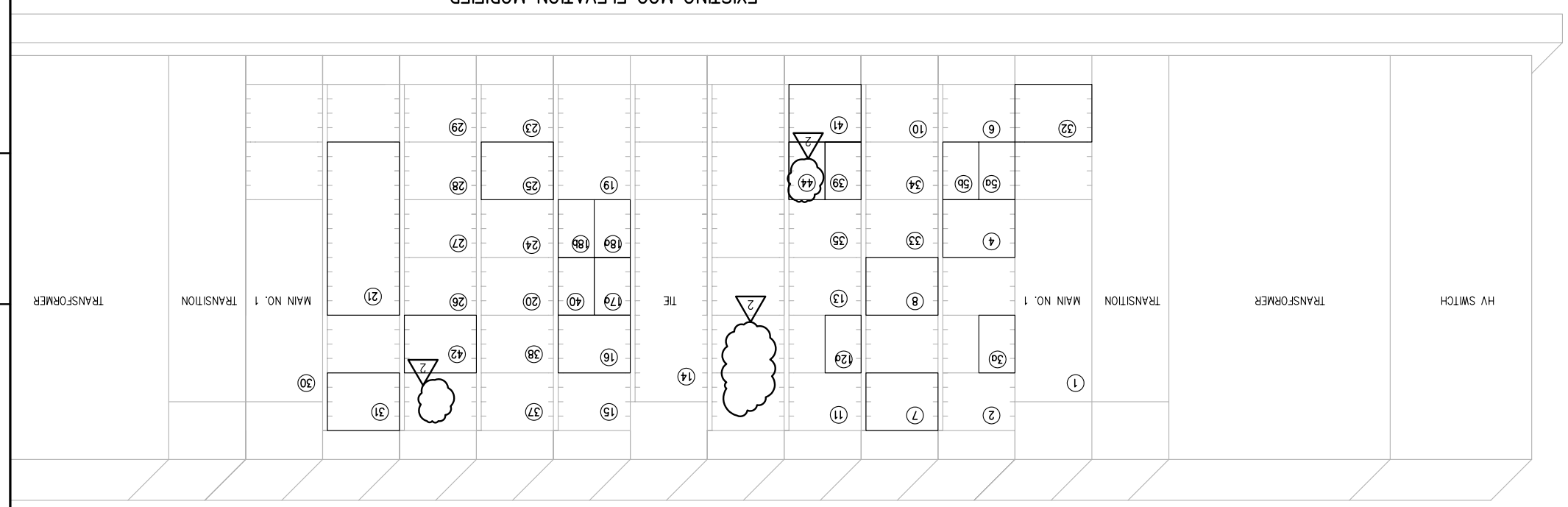

EXISTING MCC - MODIFIED
SINGLE LINE DIAGRAM

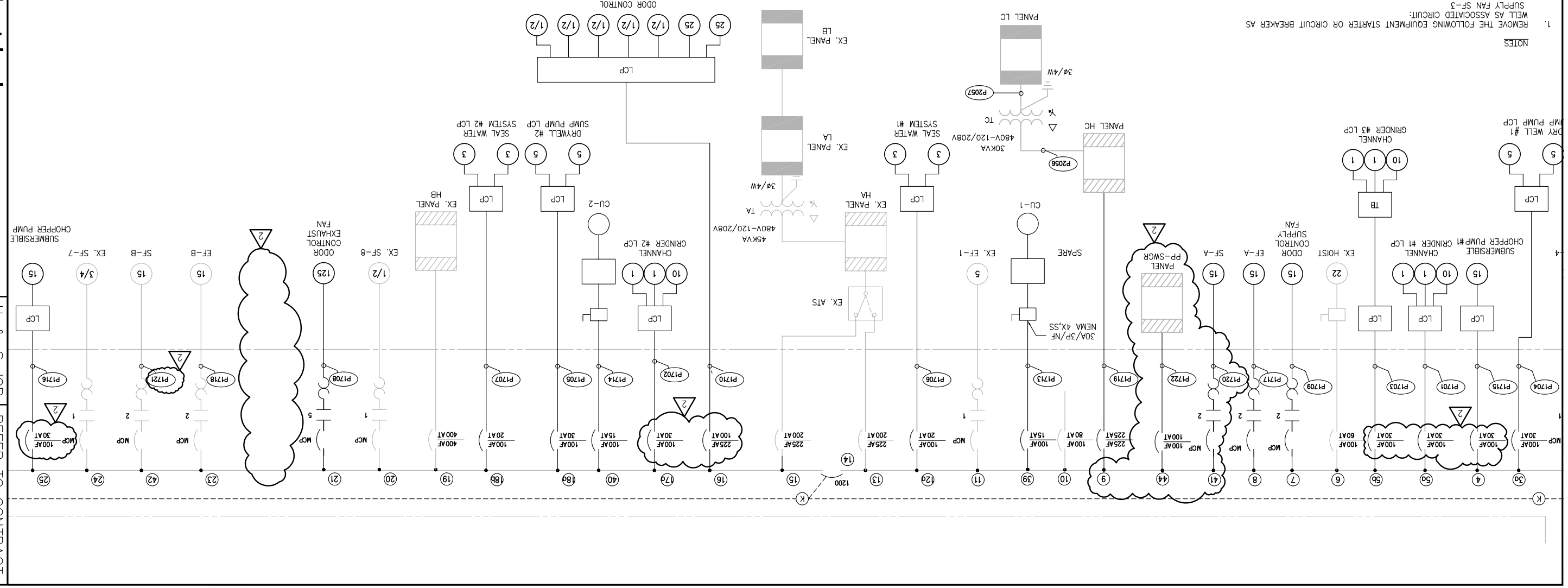

ADDENDUM NO. 4	DATE 01-07-08	BY H & S	Electrical Low Voltage Single Line Diagram RIVERSIDE ROAD PUMP STATION UPGRADES 575 RIVERSIDE ROAD, ROSWELL GA. 30075
ATTACHMENT NO. ESK-3			

H & S JOB NUMBER 30039
CONTRACT NUMBER .
REFER TO CONTRACT DRAWING NUMBER E4
SHEET 1 OF 1

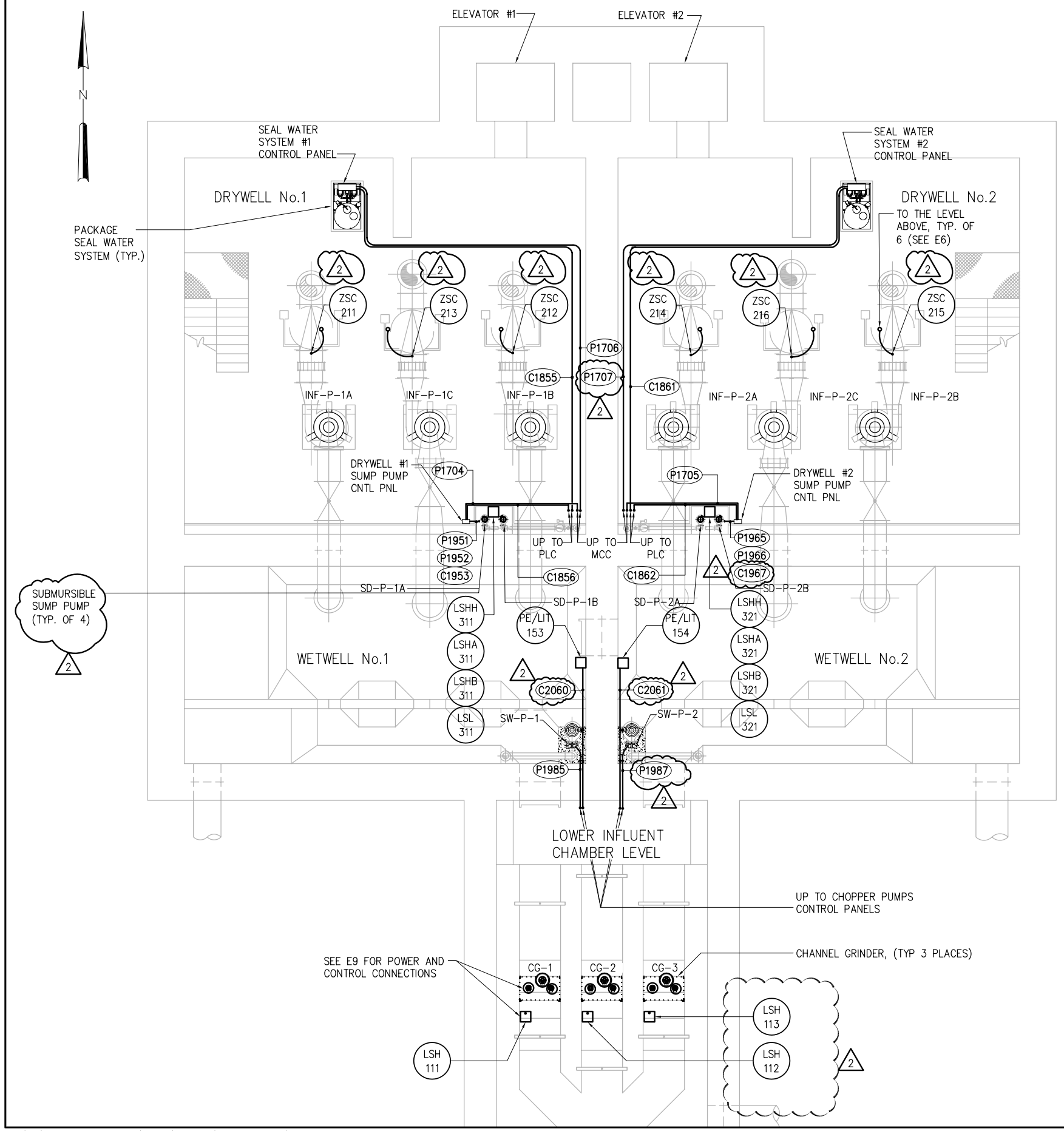

REFER TO CONTRACT DRAWING NUMBER	E5
SHEET	1 OF 1
H & S JOB NUMBER	30039
CONTRACT NUMBER	.

Electrical Power and Control Bottom Plan

RIVERSIDE ROAD PUMP STATION UPGRADES

575 RIVERSIDE ROAD, ROSWELL GA. 30075

ADDENDUM NO.	DATE	BY
4	01-07-08	H & S

ATTACHMENT NO. ESK-4

01/07/08 11:21am FILE= O:\30039\Drawings\Instrumentation\Instrmentation Sketch 1 by CPLANTER XREF FILE = NONE

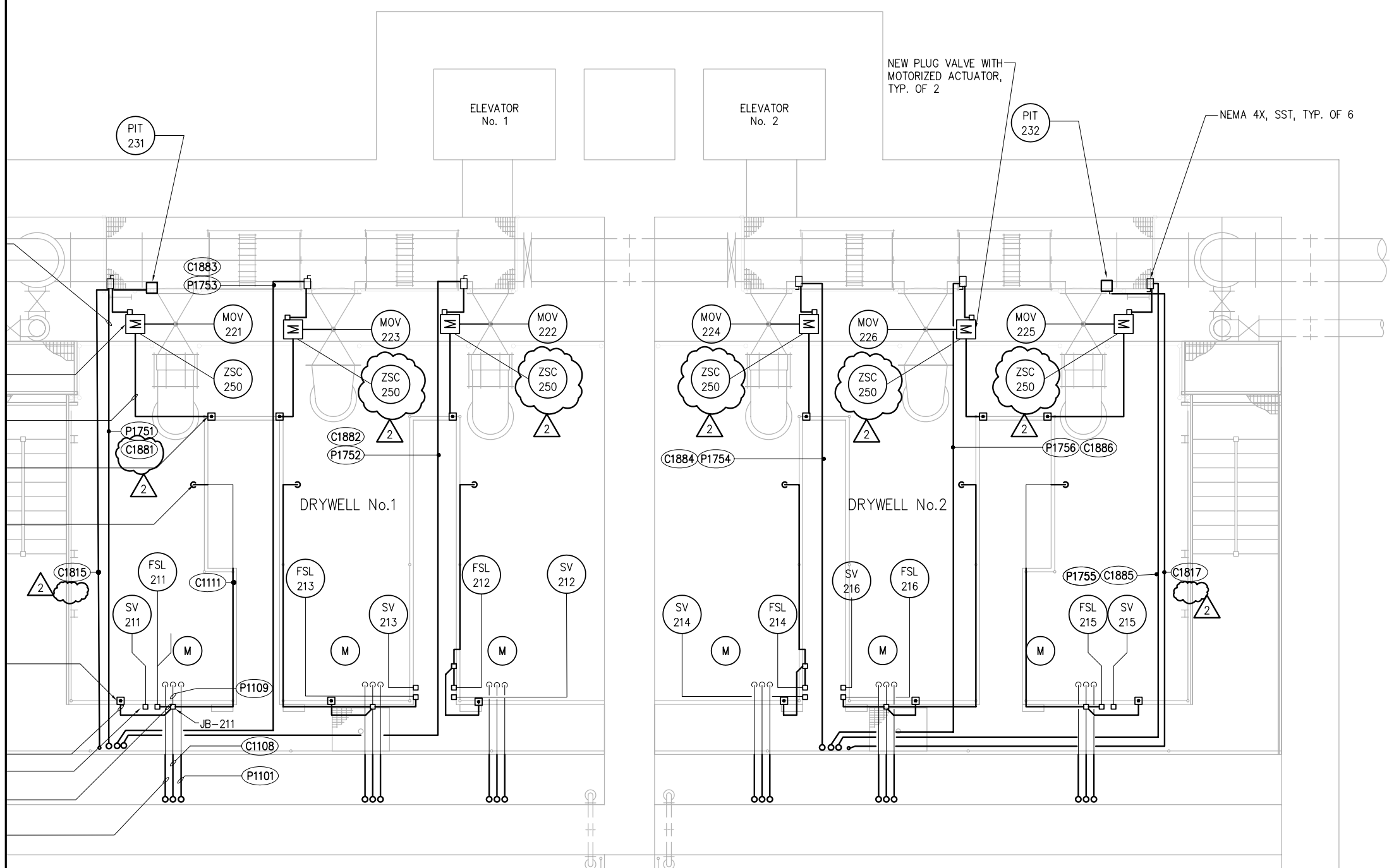

NOTES:

1. SEE M3 FOR ELECTRICAL DEMOLITION.
2. THE CONTROL AND POWER CONDUITS SHOWN FOR INFLUENT PUMP INF-P-1A ARE TYPICAL. REFER TO E7 FOR CONTINUATION. REFER TO RISER DIAGRAM ON E19 FOR POWER AND CONTROL CONDUIT NUMBERS FOR THE REMAINING FIVE INFLUENT PUMPS.

REFER TO CONTRACT DRAWING NUMBER E6

SHEET 1 OF 1

H & S JOB NUMBER 30039

CONTRACT NUMBER .

Electrical Power and Control Intermediate Plan

RIVERSIDE ROAD PUMP STATION UPGRADES

575 RIVERSIDE ROAD, ROSWELL GA. 30075

DATE 01-07-08

BY H & S

ADDENDUM NO. 4

ATTACHMENT NO. ESK-5

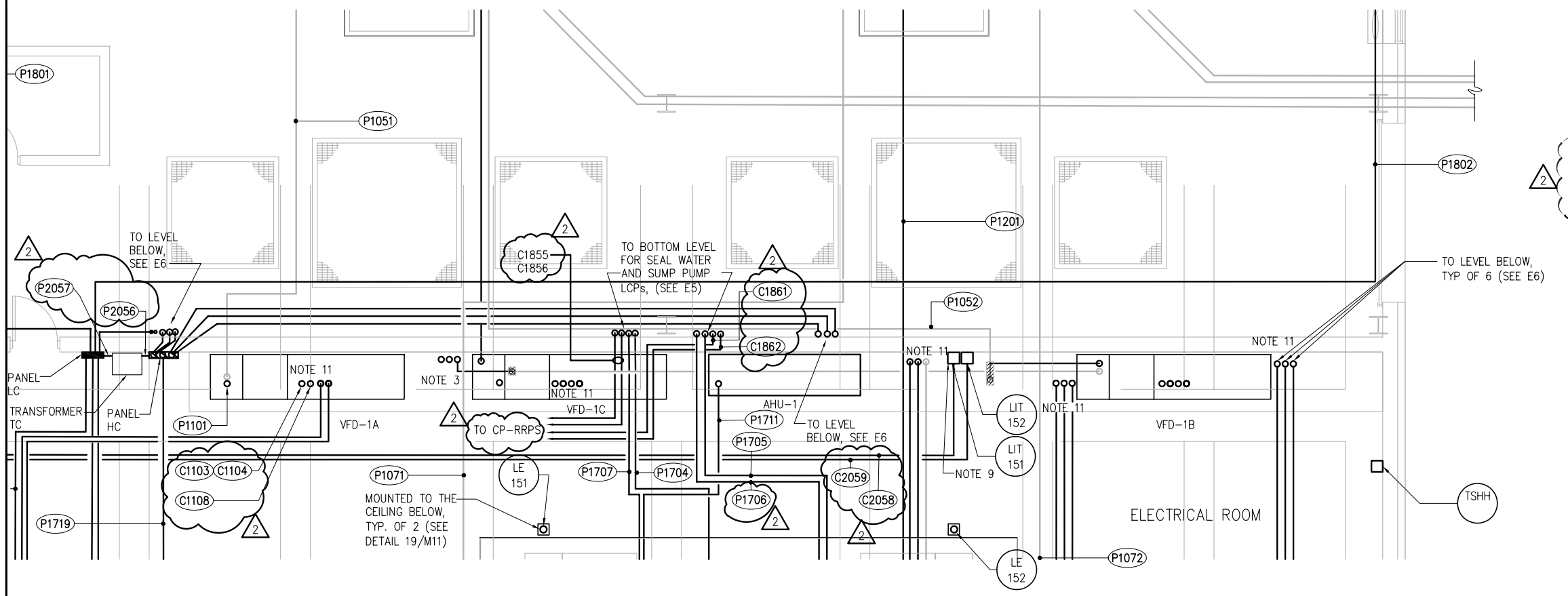

10. REFER TO THE SINGLE LINE DIAGRAM ON E19 FOR POWER AND CONTROL CONNECTIONS OF THE VENTILATION CONTROL PANEL.

11. THE DESIGNATED ON THE DRAWING CONTROL AND POWER CONDUIT FOR INFLUENT PUMP INF-P-1A ARE TYPICAL FOR ALL SIX INFLUENT PUMPS. REFER TO E6 FOR CONTINUATION. REFER TO RISER DIAGRAM ON E19 FOR POWER AND CONTROL CONDUIT NUMBERS FOR THE REMAINING FIVE INFLUENT PUMPS.

12. REFER TO NOTE 4 ON M8 FOR ELEVATOR WORKS.

13. REFER TO H3 FOR HVAC CONTROL REQUIREMENTS AND PROVIDE CONTROL CONDUITS AS REQUIRED.

REFER TO CONTRACT DRAWING NUMBER E7

SHEET 1 OF 1

H & S JOB NUMBER 30039

CONTRACT NUMBER .

Electrical Power and Control Top Plan

RIVERSIDE ROAD PUMP STATION UPGRADES

575 RIVERSIDE ROAD, ROSWELL GA. 30075

DATE 01-07-08

BY H & S

ADDENDUM NO. 4

ATTACHMENT NO. ESK-6

01/07/08 11:21am FILE= O:\30039\Drawings\Instrumentation\Instrmentation Sketch 1 by CPLANTER XREF FILE = NONE

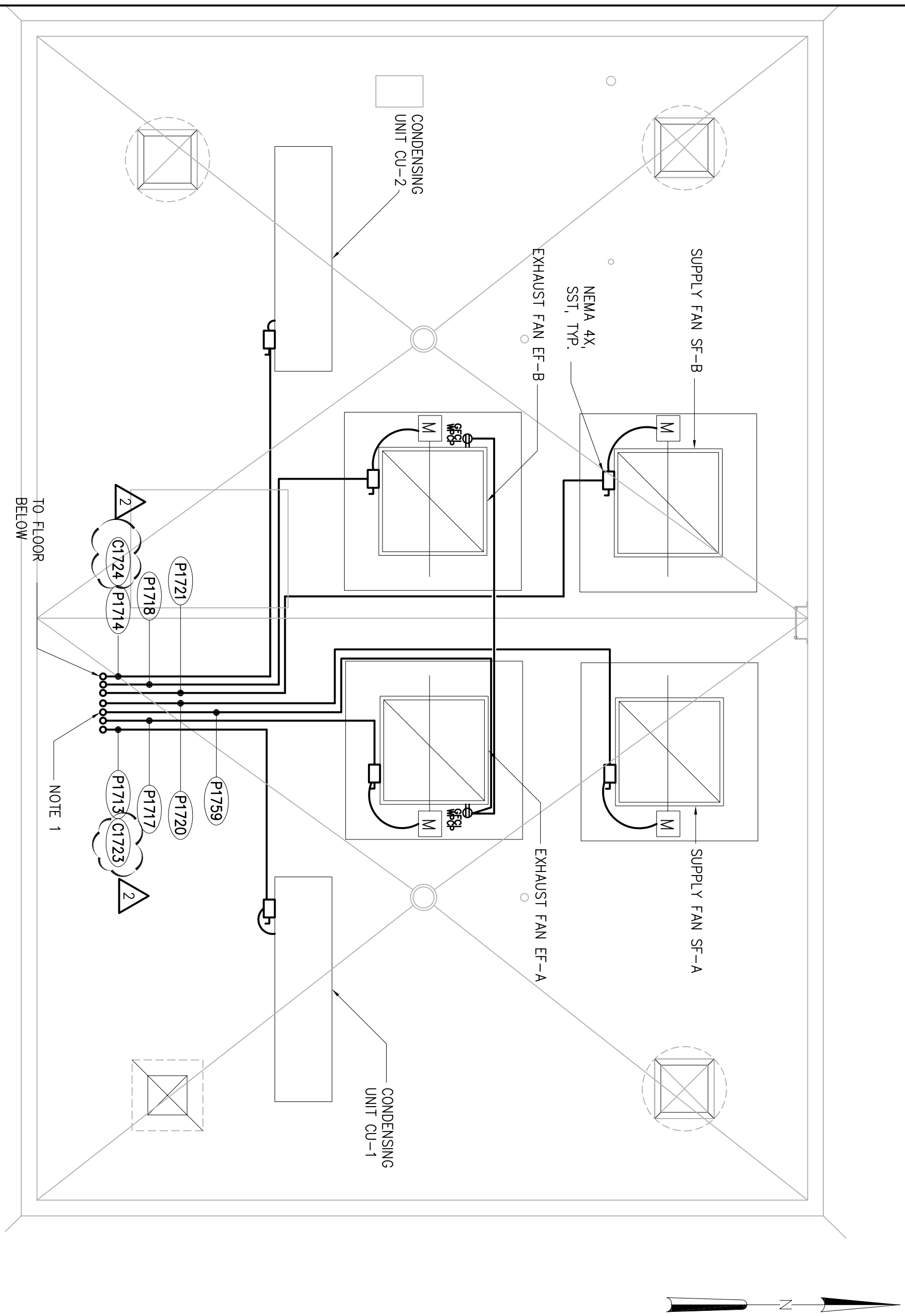

ADDENDUM NO.	DATE	Electrical	H & S JOB NUMBER	REFER TO CONTRACT DRAWING NUMBER
4	01-07-08	Power and Control Roof Plan	30039	E8
ATTACHMENT NO.	BY	RIVERSIDE ROAD PUMP STATION UPGRADES 575 RIVERSIDE ROAD, ROSWELL GA. 30075	CONTRACT NUMBER	SHEET 1 OF 1
ESK-7	H & S		.	

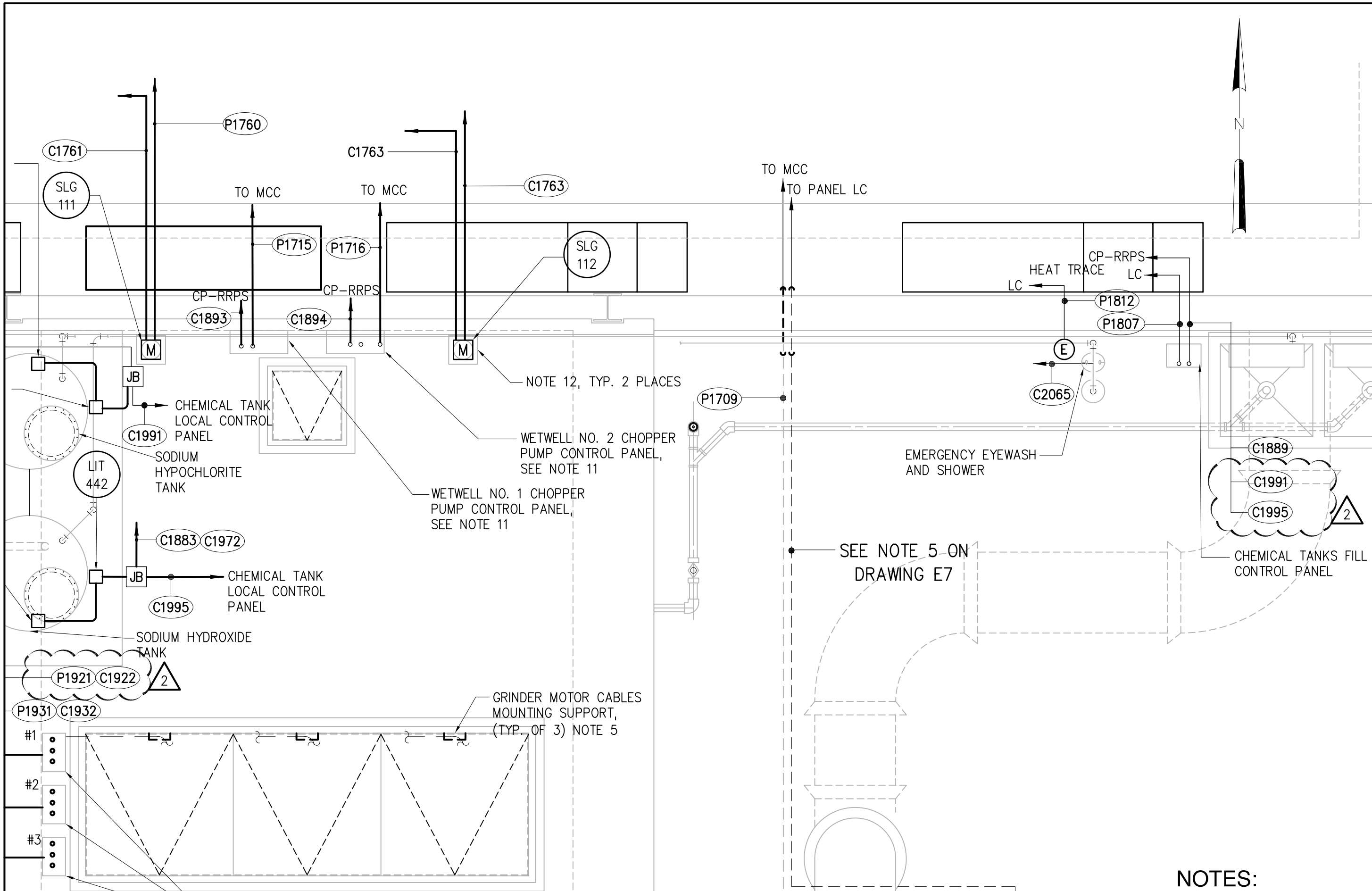

NOTES:

REFER TO CONTRACT DRAWING NUMBER E9

SHEET 1 OF 1

H & S JOB NUMBER 30039

CONTRACT NUMBER .

Electrical
Power and Control - Odor Control Area

RIVERSIDE ROAD PUMP STATION UPGRADES

575 RIVERSIDE ROAD, ROSWELL GA. 30075

DATE 01-07-08

BY H & S

ADDENDUM NO. 4

ATTACHMENT NO. ESK-8

01/07/08 11:21am FILE= O:\30039\Drawings\Instrumentation\Instrmentation Sketch 1 by CPLANTER XREF FILE = NONE

CONDUIT #	SIZE	FROM	TO	CABLE	PURPOSE	REMARKS
P1051	4"	MAIN SWITCHGEAR MSG-1	INFLUENT PUMP INF-P-1A VFD-1A	3-#2/0, 1-#6 GND	POWER	5/8 KV CABLE, 600V GROUND
P1052	4"	MAIN SWITCHGEAR MSG-1	INFLUENT PUMP INF-P-1B VFD-1B	3-#2/0, 1-#6 GND	POWER	5/8 KV CABLE, 600V GROUND
P1053	4"	MAIN SWITCHGEAR MSG-1	INFLUENT PUMP INF-P-1C VFD-1C	3-#2/0, 1-#6 GND	POWER	5/8 KV CABLE, 600V GROUND
P1071	4"	MAIN SWITCHGEAR MSG-2	INFLUENT PUMP INF-P-2A VFD-2A	3-#2/0, 1-#6 GND	POWER	5/8 KV CABLE, 600V GROUND
P1072	4"	MAIN SWITCHGEAR MSG-2	INFLUENT PUMP INF-P-2B VFD-2B	3-#2/0, 1-#6 GND	POWER	5/8 KV CABLE, 600V GROUND
P1073	4"	MAIN SWITCHGEAR MSG-2	INFLUENT PUMP INF-P-2C VFD-2C	3-#2/0, 1-#6 GND	POWER	5/8 KV CABLE, 600V GROUND
P1101	4"	INFLUENT PUMP INF-P-1A VFD-1A	INFLUENT PUMP INF-P-1A	3-#2/0, 1-#6 GND	POWER	5/8 KV CABLE, 600V GROUND
C1103 2	4"	INFLUENT PUMP INF-P-1A VFD-1A	INFLUENT PUMP INF-P-1A	8-#16-3C/TTS	CONTROL	RTDs
C1104	2"	INFLUENT PUMP INF-P-1A VFD-1A	INFLUENT PUMP INF-P-1A	6-#16TSP	CONTROL	VIBRATION SENSORS
2 C1105	1"	INFLUENT PUMP INF-P-1A VFD-1A	CP-RRPS	CAT5	CONTROL	CABLE PROVIDED BY SYS. INTERC
C1106	2"	INFLUENT PUMP INF-P-1A VFD-1A	CP-RRPS	3-#16TSP	CONTROL	
C1107 2	3/4"	INFLUENT PUMP INF-P-1A VFD-1A	CP-RRPS	10-#14, 1-#14 GND	CONTROL	
C1108	1"	INFLUENT PUMP INF-P-1A VFD-1A	JB-211	2 14-#14,1-#14 GND, 2-#12,1-#12G	CONTROL	CONTROL & POWER
P1109	3/4"	JB-211	SH-211	2-#12, 1-#12 GND	POWER	SPACE HEATER
C1110	3/4"	JB-211	ES-211	6-#14,1-#14 GND	CONTROL	E-STOP
C1111	3/4"	JB-211	ZSC-211	2 2-#14, 1-#14 GND	CONTROL	CHECK VALVE
C1112	3/4"	JB-211	SV-211, FSL-211	4-#14, 1-#14 GND	CONTROL	SOLENOID VALVE
P1201	4"	INFLUENT PUMP INF-P-1B VFD-1B	INFLUENT PUMP INF-P-1B	3-#2/0, 1-#6 GND	POWER	5/8 KV CABLE, 600V GROUND
C1203 2	4"	INFLUENT PUMP INF-P-1B VFD-1B	INFLUENT PUMP INF-P-1B	8-#16-3C/TTS	CONTROL	RTDs
C1204	2"	INFLUENT PUMP INF-P-1B VFD-1B	INFLUENT PUMP INF-P-1B	6-#16TSP	CONTROL	VIBRATION SENSORS
2 C1205	1"	INFLUENT PUMP INF-P-1A VFD-1A	CP-RRPS	CAT5	CONTROL	CABLE PROVIDED BY SYS.INT.
C1206	2"	INFLUENT PUMP INF-P-1B VFD-1B	CP-RRPS	3-#16TSP	CONTROL	
C1207 2	3/4"	INFLUENT PUMP INF-P-1B VFD-1B	CP-RRPS	10-#14, 1-#14 GND	CONTROL	
C1208	1"	INFLUENT PUMP INF-P-1B VFD-1B	JB-212	2 14-#14,1-#14 GND, 2-#12,1-#12G	CONTROL	CONTROL & POWER
P1209	3/4"	JB-212	SH-212	2-#12, 1-#12 GND	POWER	SPACE HEATER
C1210	3/4"	JB-212	ES-212	6-#14,1-#14 GND	CONTROL	E-STOP
C1211	3/4"	JB-212	ZSC-212	2 2-#14, 1-#14 GND	CONTROL	CHECK VALVE
C1212	3/4"	JB-212	SV-212, FSL-212	4-#14, 1-#14 GND	CONTROL	SOLENOID VALVE
P1301	4"	INFLUENT PUMP INF-P-1C VFD-1C	INFLUENT PUMP INF-P-1C	3-#2/0, 1-#6 GND	POWER	5/8 KV CABLE, 600V GROUND
C1303 2	4"	INFLUENT PUMP INF-P-1C VFD-1C	INFLUENT PUMP INF-P-1C	8-#16-3C/TTS	CONTROL	RTDs
C1304	2"	INFLUENT PUMP INF-P-1C VFD-1C	INFLUENT PUMP INF-P-1C	6-#16TSP	CONTROL	VIBRATION SENSORS
2 C1305	1"	INFLUENT PUMP INF-P-1A VFD-1A	CP-RRPS	CAT5	CONTROL	CABLE PROVIDED BY SYS. INTERC
C1306	2"	INFLUENT PUMP INF-P-1C VFD-1C	CP-RRPS	3-#16TSP	CONTROL	
C1307 2	3/4"	INFLUENT PUMP INF-P-1C VFD-1C	CP-RRPS	10-#14, 1-#14 GND	CONTROL	
C1308	1"	INFLUENT PUMP INF-P-1C VFD-1C	JB-213	2 14-#14,1-#14 GND, 2-#12,1-#12G	CONTROL	CONTROL & POWER
P1309	3/4"	JB-213	SH-213	2-#12, 1-#12 GND	POWER	SPACE HEATER
C1310	3/4"	JB-213	ES-213	6-#14,1-#14 GND	CONTROL	E-STOP
C1311	3/4"	JB-213	ZSC-213	2 2-#14, 1-#14 GND	CONTROL	CHECK VALVE
C1312	3/4"	JB-213	SV-213, FSL-213	4-#14, 1-#14 GND	CONTROL	SOLENOID VALVE
P1401	4"	INFLUENT PUMP INF-P-2A VFD-2A	INFLUENT PUMP INF-P-2A	3-#2/0, 1-#6 GND	POWER	5/8 KV CABLE, 600V GROUND
C1403 2	4"	INFLUENT PUMP INF-P-2A VFD-2A	INFLUENT PUMP INF-P-2A	8-#16-3C/TTS	CONTROL	RTDs
C1404	2"	INFLUENT PUMP INF-P-2A VFD-2A	INFLUENT PUMP INF-P-2A	6-#16TSP	CONTROL	VIBRATION SENSORS
2 C1405	1"	INFLUENT PUMP INF-P-1A VFD-1A	CP-RRPS	CAT5	CONTROL	CABLE PROVIDED BY SYS. INTERC
C1406	2"	INFLUENT PUMP INF-P-2A VFD-2A	CP-RRPS	3-#16TSP	CONTROL	
C1407 2	3/4"	INFLUENT PUMP INF-P-2A VFD-2A	CP-RRPS	10-#14, 1-#14 GND	CONTROL	
C1408	1"	INFLUENT PUMP INF-P-2A VFD-2A	JB-214	2 14-#14,1-#14 GND, 2-#12,1-#12G	CONTROL	CONTROL & POWER
P1409	3/4"	JB-214	SH-214	2-#12, 1-#12 GND	POWER	SPACE HEATER
C1410	3/4"	JB-214	ES-214	6-#14,1-#14 GND	CONTROL	E-STOP
C1411	3/4"	JB-214	ZSC-214	2 2-#14, 1-#14 GND	CONTROL	CHECK VALVE
C1412	3/4"	JB-214	SV-214, FSL-214	4-#14, 1-#14 GND	CONTROL	SOLENOID VALVE
P1501	4"	INFLUENT PUMP INF-P-2B VFD-2B	INFLUENT PUMP INF-P-2B	3-#2/0, 1-#6 GND	POWER	5/8 KV CABLE, 600V GROUND
C1503 2	4"	INFLUENT PUMP INF-P-2B VFD-2B	INFLUENT PUMP INF-P-2B	8-#16-3C/TTS	CONTROL	RTDs
C1504	2"	INFLUENT PUMP INF-P-2B VFD-2B	INFLUENT PUMP INF-P-2B	6-#16TSP	CONTROL	VIBRATION SENSORS
2 C1505	1"	INFLUENT PUMP INF-P-1A VFD-1A	CP-RRPS	CAT5	CONTROL	CABLE PROVIDED BY SYS. INTERC
C1506	2"	INFLUENT PUMP INF-P-2B VFD-2B	CP-RRPS	3-#16TSP	CONTROL	
C1507 2	3/4"	INFLUENT PUMP INF-P-2B VFD-2B	CP-RRPS	10-#14, 1-#14 GND	CONTROL	
C1508	1"	INFLUENT PUMP INF-P-2B VFD-2B	JB-215	2 14-#14,1-#14 GND, 2-#12,1-#12G	CONTROL	CONTROL & POWER
P1509	3/4"	JB-215	SH-215	2-#12, 1-#12 GND	POWER	SPACE HEATER
C1510	3/4"	JB-215	ES-215	6-#14,1-#14 GND	CONTROL	E-STOP
C1511	3/4"	JB-215	ZSC-215	2 2-#14, 1-#14 GND	CONTROL	CHECK VALVE
C1512	3/4"	JB-215	SV-215, FSL-215	4-#14, 1-#14 GND	CONTROL	SOLENOID VALVE
P1601	4"	INFLUENT PUMP INF-P-2C VFD-2C	INFLUENT PUMP INF-P-2C	3-#2/0, 1-#6 GND	POWER	5/8 KV CABLE, 600V GROUND
C1603 2	4"	INFLUENT PUMP INF-P-2C VFD-2C	INFLUENT PUMP INF-P-2C	8-#16-3C/TTS	CONTROL	RTDs
C1604	2"	INFLUENT PUMP INF-P-2C VFD-2C	INFLUENT PUMP INF-P-2C	6-#16TSP	CONTROL	VIBRATION SENSORS
2 C1605	1"	INFLUENT PUMP INF-P-1A VFD-1A	CP-RRPS	CAT5	CONTROL	CABLE PROVIDED BY SYS. INTERC

CONDUIT #	SIZE	FROM	TO	CABLE	PURPOSE	REMARKS
C1606	2"	INFLUENT PUMP INF-P-2C VFD-2C	CP-RRPS	3-#16TSP	CONTROL	
C1607 2	3/4"	INFLUENT PUMP INF-P-2C VFD-2C	CP-RRPS	10-#14, 1-#14 GND	CONTROL	
C1608	1"	INFLUENT PUMP INF-P-2C VFD-2C	JB-216	2 14-#14,1-#14 GND, 2-#12,1-#12G	CONTROL	CONTROL & POWER
2 P1609	3/4"	JB-216	SH-216	2-#12, 1-#12 GND	POWER	SPACE HEATER
C1610	3/4"	JB-216	ES-216	6-#14,1-#14 GND	CONTROL	E-STOP
C1611	3/4"	JB-216	ZSC-216	2 2-#14, 1-#14 GND	CONTROL	CHECK VALVE
C1612	3/4"	JB-216	SV-216, FSL-216	4-#14, 1-#14 GND	CONTROL	SOLENOID VALVE
P1701	3/4"	MCC	CHANNEL GRINDER No.1 LCP	3-#10, 1-#10 GND	POWER	
P1702	3/4"	MCC	CHANNEL GRINDER No.2 LCP	3-#10, 1-#10 GND	POWER	
P1703	3/4"	MCC	CHANNEL GRINDER No.3 LCP	3-#10, 1-#10 GND	POWER	
P1704	3/4"	MCC	DRYWELL No.1 SUMP PUMP LCP	3-#10, 1-#10 GND	POWER	
P1705	3/4"	MCC	DRYWELL No.2 SUMP PUMP LCP	3-#10, 1-#10 GND	POWER	
P1706	3/4"	MCC	DRYWELL No.1 SEAL WATER LCP	3-#10, 1-#10 GND	POWER	
P1707	3/4"	MCC	DRYWELL No.2 SEAL WATER LCP	3-#10, 1-#10 GND	POWER	
P1708	3"	MCC	ODOR CONTROL SYSTEM EXHAUST FAN	2 3-#3/0, 1-#6 GND	POWER	
P1709	3/4"	MCC	ODOR CONTROL SYSTEM SUPPLY FAN	3-#10, 1-#10 GND	POWER	
2 P1710	1-1/2"	MCC	ODOR CONROL SYSTEM LCP	2 3-#1, 1-#6 GND	POWER	
P1711	3"	MCC	AIR HANDLING UNIT AHU-1	3-#2/0, 1-#6 GND	POWER	
P1712	3"	MCC	AIR HANDLING UNITAHU-2	3-#2/0, 1-#6 GND	POWER	
P1713	3/4"	MCC	CONDENSING UNIT CU-1	3-#10, 1-#10 GND	POWER	
P1714	3/4"	MCC	CONDENSING UNIT CU-2	3-#10, 1-#10 GND	POWER	
P1715 2	1"	MCC	WETWELL No.1 CHOPPER PUMP LCP	3-#8, 1-#8 GND	POWER	
P1716	1"	MCC	WETWELL No.2 CHOPPER PUMP LCP	3-#8, 1-#8 GND	POWER	
P1717	3/4"	MCC	EXHASUT FANEF-A, L-A 2	3-#10, 2-#12, 1-#10 GND	POWER	EXHAUST FAN AND LOUVER
P1718	3/4"	MCC	EXHAUST FAN EF-B, L-B	3-#10, 2-#12, 1-#10 GND	POWER	EXHAUST FAN AND LOUVER
P1719	3"	MCC	PANELBOARD HC	4-#4/0, 1-#4GND.	POWER	
P1720	3/4"	MCC	SUPPLY FAN SF-A, L-A	3-#10, 2-#12, 1-#10 GND	POWER	EXHAUST FAN AND LOUVER
P1721	3/4"	MCC	SUPPLY FAN SF-B, L-B	3-#10, 2-#12, 1-#10 GND	POWER	EXHAUST FAN AND LOUVER
P1722	2"	MCC	PANEL PP-SWGR	3-#1, 1-#6 GND 2	POWER	
C1723	3/4"	AHU-1	CU-1	8-#14, 1-#14 GND	CONTROL	
2 C1724	3/4"	AHU-2	CU-2	8-#14, 1-#14 GND	CONTROL	
P1751	3/4"	PANELBOARD HC	INFLUENT PUMP INF-P-1A ISOL. VALVE	3-#12, 1-#12 GND	POWER	MOV-221
P1752	3/4"	PANELBOARD HC	INFLUENT PUMP INF-P-1B ISOL. VALVE	3-#12, 1-#12 GND	POWER	MOV-222
P1753	3/4"	PANELBOARD HC	INFLUENT PUMP INF-P-1C ISOL. VALVE	3-#12, 1-#12 GND	POWER	MOV-223
P1754	3/4"	PANELBOARD HC	INFLUENT PUMP INF-P-2A ISOL. VALVE	3-#12, 1-#12 GND	POWER	MOV-224
P1755	3/4"	PANELBOARD HC	INFLUENT PUMP INF-P-2B ISOL. VALVE	3-#12, 1-#12 GND	POWER	MOV-225
P1756	3/4"	PANELBOARD HC	INFLUENT PUMP INF-P-2C ISOL. VALVE	3-#12, 1-#12 GND	POWER	MOV-226
P1757	3/4"	PANELBOARD HC	GATE OPERATOR	3-#12, 1-#12 GND	POWER	
P1758	3/4"	PANELBOARD HC	INFLUENT MANHOLE No.1 SLG-100	4-#10, 1-#10 GND	POWER	
2 P1759	3/4"	PANELBOARD HC	ROOF EQUIPMENT SERVICE RECEPTS	2-#10, 1-#10 GND	POWER	
P1760	3/4"	PANELBOARD HC	SLUICE GATE SLG-111 OPERATOR	3-#12, 1-#12 GND	POWER	
C1761	3/4"	CP-RRPS	SLUICE GATE SLG-111 OPERATOR	12-#14, 1-#14 GND	CONTROL	
P1762	3/4"	PANELBOARD HC	SLUICE GATE SLG-112 OPERATOR	3-#12, 1-#12 GND	POWER	
C1763	3/4"	CP-RRPS	SLUICE GATE SLG-112 OPERATOR	12-#14, 1-#14 GND	CONTROL	
2 C1764	1"	CP-RRPS	GATE OPERATOR	8-#14, 1-#14 GND	CONTROL	
P1801	3/4"	PANELBOARD LC	DRYWELL No.1 VENTILATION ALARM LCP	2-#12, 1-#12 GND	POWER	
P1802	3/4"	PANELBOARD LC	DRYWELL No.2 VENTILATION ALARM LCP	2-#12, 1-#12 GND	POWER	
P1803	3/4"	PANELBOARD LC	FIRE ALARM CONTROL PANEL	2-#12, 1-#12 GND	POWER	
P1804	3/4"	PANELBOARD LC	SECURITY ALARM CONTROL PANEL	2-#12, 1-#12 GND	POWER	
P1807	3/4"	PANELBOARD LC	CHEMICAL TANK FILL LCP	2-#12, 1-#12 GND	POWER	
P1808	3/4"	PANELBOARD LC	CP-RRPS	2-#12, 1-#12 GND	POWER	
P1809	3/4"	PANELBOARD LC	SODIUM HYPO. LEVEL TRANSMITTER	2-#12, 1-#12 GND	POWER	
P1810	3/4"	PANELBOARD LC	SODIUM HYD. LEVEL TRANSMITTER	2-#12, 1-#12 GND	POWER	
P1811	3/4"	PANELBOARD LC	ODOR SCRUB. CTRL EYE WASH HEAT TR	2-#12, 1-#12 GND	POWER	
P1812	3/4"	PANELBOARD LC	CHEMICAL TANK EYE WASH HEAT TRACE	2-#12, 1-#12 GND	POWER	
P1813	3/4"	PANELBOARD LC	INFLUENT MANHOLE No.1 RECEPT.	2-#12, 1-#12 GND	POWER	
C1815	3/4"	CP-RRPS	PIT-231	1-#16TSP	CONTROL	
C1817	3/4"	CP-RRPS	PIT-232	1-#16TSP	CONTROL	
P1818	3/4"	PANELBOARD LC	ODOR CONTROL CARBON SYSTEM PANE	2-#12, 1-#12 GND	POWER	
P1819	3/4"	PANELBOARD LC	SERVICE RECEPTACLES ROOF TOP UNITS	2-#12, 1-#12 GND	POWER	

REFER TO CONTRACT DRAWING NUMBER E15

SHEET 1 OF 1

H & S JOB NUMBER 30039

CONTRACT NUMBER

Electrical Conduit & Wire Schedule - Sheet 1

RIVERSIDE ROAD PUMP STATION UPGRADES

575 RIVERSIDE ROAD, ROSWELL GA. 30075

DATE 01-07-08

BY H & S

ADDENDUM NO. 4

ATTACHMENT NO. ESK-9

CONDUIT #	SIZE	FROM	TO	CABLE	PURPOSE	REMARKS
C1851	2"	CP-RRPS	ANTENNA	COAXIAL	CONTROL	
C1852	1"	CP-RRPS	WETWELL No.1 EX LEVEL TRANSDUCER	MANUFACTURER'S CABLE	CONTROL	RELOCATED LE-151
C1853	3/4"	CP-RRPS	DRYWELL No.1 HIGH LEVEL	2-#14, 1-#14 GND	CONTROL	LSHH-341
C1854	1"	CP-RRPS	WETWELL No.1 LEVEL TRANSDUCER	MANUFACTURER'S CABLE	CONTROL	LE-152
C1855	3/4"	CP-RRPS	DRYWELL No.1 SEAL WATER LCP	16-#14, 1-#14 GND	CONTROL	
C1856	3/4"	CP-RRPS	DRYWELL No.1 SUMP PUMP LCP	10-#14, 1-#14 GND	CONTROL	
C1857	3/4"	CP-RRPS	DRYWELL No.1 VENTILATION ALARM LCP	8-#14, 1-#14 GND	CONTROL	
C1858	1"	CP-RRPS	DRYWELL No.2 EX LEVEL TRANSDUCER	MANUFACTURER'S CABLE	CONTROL	LE-151 RELOCATED
C1859	3/4"	CP-RRPS	DRYWELL No.2 HIGH LEVEL	2-#14, 1-#14 GND	CONTROL	LSHH-342
C1860	1"	CP-RRPS	DRYWELL No.2 LEVEL TRANSDUCER	MANUFACTURER'S CABLE	CONTROL	LE-152
C1861	3/4"	CP-RRPS	DRYWELL No.2 SEAL WATER LCP	16-#14, 1-#14 GND	CONTROL	
C1862	3/4"	CP-RRPS	DRYWELL No.2 SUMP PUMP LCP	10-#14, 1-#14 GND	CONTROL	
C1863	3/4"	CP-RRPS	DRYWELL NO.2 VENTILATION ALARM LCP	8-#14, 1-#14 GND	CONTROL	
C1864	3/4"	CP-RRPS	ELECTRICAL ROOM HIGH TEMP	2-#14, 1-#14 GND	CONTROL	TSHH
C1865	3/4"	CP-RRPS	FIRE ALARM LCP	2-#14, 1-#14 GND	CONTROL	
C1866	3/4"	CP-RRPS	GENERATOR G1	20-#14, 1-#14 GND	CONTROL	
C1867	3/4"	CP-RRPS	GENERATOR G2	20-#14, 1-#14 GND	CONTROL	
C1868	2"	CP-RRPS	GENERATOR SWITCHGEAR	8-PAIR	CONTROL	FIBER OPTIC CABLE
C1869	2"	CP-RRPS	GRINDER GR-101 LCP	CAT5	CONTROL	CABLE PROVIDED BY SYS. INTEGR.
C1870	2"	CP-RRPS	GRINDER GR-102 LCP	CAT5	CONTROL	CABLE PROVIDED BY SYS. INTEGR.
C1871	2"	CP-RRPS	GRINDER GR-103 LCP	CAT5	CONTROL	CABLE PROVIDED BY SYS. INTEGR.
C1872	3/4"	CP-RRPS	INFL. MANHOLE No.1 SLUICE GATE SLG-100	2-#16TSP	CONTROL	
C1873	3/4"	CP-RRPS	INFL. MANHOLE No.1 SLUICE GATE SLG-100	12-#14, 1-#14 GND	CONTROL	
C1874	3/4"	CP-RRPS	MCC	20-#14, 1-#14 GND	CONTROL	
C1875	3/4"	CP-RRPS	MCC	20-#14, 1-#14 GND	CONTROL	
C1876	3/4"	CP-RRPS	MSG-1	20-#14, 1-#14 GND	CONTROL	
C1877	3/4"	CP-RRPS	MSG-2	20-#14, 1-#14 GND	CONTROL	LSHH-451
C1878	3/4"	CP-RRPS	ODOR CON. CONTAINMENT HIGH LEVEL	2-#14, 1-#14 GND	CONTROL	
C1879	1"	CP-RRPS	ODOR CONTROL SCRUBBER SYSTEM LCP	30-#14, 1-#14 GND	CONTROL	
C1881	3/4"	CP-RRPS	PUMP INF-P-1A ISOLATION VALVE	12-#14, 1-#14 GND	CONTROL	MOV-221
C1882	3/4"	CP-RRPS	PUMP INF-P-1B ISOLATION VALVE	12-#14, 1-#14 GND	CONTROL	MOV-222
C1883	3/4"	CP-RRPS	PUMP INF-P-1C ISOLATION VALVE	12-#14, 1-#14 GND	CONTROL	MOV-223
C1884	3/4"	CP-RRPS	PUMP INF-P-2A ISOLATION VALVE	12-#14, 1-#14 GND	CONTROL	MOV-224
C1885	3/4"	CP-RRPS	PUMP INF-P-2B ISOLATION VALVE	12-#14, 1-#14 GND	CONTROL	MOV-225
C1886	3/4"	CP-RRPS	PUMP INF-P-2C ISOLATION VALVE	12-#14, 1-#14 GND	CONTROL	MOV-226
C1887	3/4"	CP-RRPS	SECURITY ALARM LCP	2-#14, 1-#14 GND	CONTROL	
C1889	3/4"	CP-RRPS	CHEMICAL FILL TANK LCP	8-#14, 1-#14 GND	CONTROL	
C1893	3/4"	CP-RRPS	WETWELL No.1 CHOPPER PUMP LCP	10-#14, 1-#14 GND	CONTROL	
C1894	3/4"	CP-RRPS	WETWELL No.2 CHOPPER PUMP LCP	10-#14, 1-#14 GND	CONTROL	
C1895	3/4"	CP-RRPS	SODIUM HYPOCHLORITE FILL PANEL	6-#14, 1-#14 GND	CONTROL	
C1896	3/4"	CP-RRPS	SODIUM HYPOCHLORITE STORAGE TANK	1-#16TSP	CONTROL	
P1921	3/4"	GRINDER GR-101 LCP	GRINDER GR-101 TERMINAL BOX	3-#10, 1-#10 GND	POWER	
C1922	3/4"	GRINDER GR-101 LCP	GRINDER GR-101 TERMINAL BOX	8-#14, 1-#14 GND	CONTROL	
P1923	1"	GRINDER GR-101 TERMINAL BOX	GRINDER GR-101	MANUFACTURER'S CABLE	POWER	
C1924	1"	GRINDER GR-101 TERMINAL BOX	CHANNEL No.1 LEVEL SWITCH HIGH	MANUFACTURER'S CABLE	CONTROL	
C1925	3/4"	GRINDER GR-101 TERMINAL BOX	LOCAL CONTROL STATION	4-#14, 1-#14 GND	CONTROL	
P1931	3/4"	GRINDER GR-102 LCP	GRINDER GR-102 TERMINAL BOX	3-#10, 1-#10 GND	POWER	
C1932	3/4"	GRINDER GR-102 LCP	GRINDER GR-102 TERMINAL BOX	8-#14, 1-#14 GND	CONTROL	
P1933	1"	GRINDER GR-102 TERMINAL BOX	GRINDER GR-102	MANUFACTURER'S CABLE	POWER	
C1934	1"	GRINDER GR-102 TERMINAL BOX	CHANNEL No.2 LEVEL SWITCH HIGH	MANUFACTURER'S CABLE	CONTROL	
C1935	3/4"	GRINDER GR-102 TERMINAL BOX	LOCAL CONTROL STATION	4-#14, 1-#14 GND	CONTROL	
P1941	3/4"	GRINDER GR-103 LCP	GRINDER GR-103 TERMINAL BOX	3-#10, 1-#10 GND	POWER	
C1942	3/4"	GRINDER GR-103 LCP	GRINDER GR-103 TERMINAL BOX	8-#14, 1-#14 GND	CONTROL	
P1943	1"	GRINDER GR-103 TERMINAL BOX	GRINDER GR-103	MANUFACTURER'S CABLE	POWER	
C1944	1"	GRINDER GR-103 TERMINAL BOX	CHANNEL No.3 HIGH LEVEL SWITCH	MANUFACTURER'S CABLE	CONTROL	
C1945	3/4"	GRINDER GR-103 TERMINAL BOX	LOCAL CONTROL STATION	4-#14, 1-#14 GND	CONTROL	
P1951	1"	DRYWELL No.1 SUMP PUMP LCP	SUMP PUMP SD-P-1A	MANUFACTURER'S CABLE	POWER	
P1952	1"	DRYWELL No.1 SUMP PUMP LCP	SUMP PUMP SD-P-1B	MANUFACTURER'S CABLE	POWER	
C1953	1"	DRYWELL No.1 SUMP PUMP LCP	LEVEL SWITCHES	MANUFACTURER'S CABLE	CONTROL	
P1965	1"	DRYWELL No.2 SUMP PUMP LCP	SUMP PUMP SD-P-2A	MANUFACTURER'S CABLE	POWER	

CONDUIT #	SIZE	FROM	TO	CABLE	PURPOSE	REMARKS
P1966	1"	DRYWELL No.2 SUMP PUMP LCP	SUMP PUMP SD-P-2B	MANUFACTURER'S CABLE	POWER	
C1967	1"	DRYWELL No.2 SUMP PUMP LCP	LEVEL SWITCHES	MANUFACTURER'S CABLE	CONTROL	
C1971	3/4"	ODOR CONTROL SYSTEM LCP	SODIUM HYPO. STORAGE TANK	2-#16TSP	CONTROL	LIT-441
P1972	3/4"	ODOR CONTROL SYSTEM LCP	SODIUM HYD. STORAGE TANK	2-#16TSP	CONTROL	LIT-442
P1973	3/4"	ODOR CONTROL SYSTEM LCP	SODIUM HYPOCHLORITE FEED PUMP No.1	4-#12, 1-#12 GND	POWER	
P1975	3/4"	ODOR CONTROL SYSTEM LCP	SODIUM HYDROXIDE FEED PUMP No.1	4-#12, 1-#12 GND	POWER	
P1976	3/4"	ODOR CONTROL SYSTEM LCP	SODIUM HYDROXIDE FEED PUMP No.2	4-#12, 1-#12 GND	POWER	
P1977	3/4"	ODOR CONTROL SYSTEM LCP	MCC	12-#14, 1-#14 GND	CONTROL	EXHAUST FAN, SUPPLY FAN
P1978	1"	ODOR CONTROL SYSTEM LCP	RECIRCULATION PUMP No.1	3-#6, 1#10GND	POWER	
P1979	1"	ODOR CONTROL SYSTEM LCP	RECIRCULATION PUMP No.2	3-#6, 1#10GND	POWER	
P1980	3/4"	ODOR CONTROL SYSTEM LCP	PH ANALYZER, LOW LEVEL SWITCH	2-#16TSP	CONTROL	
~~P1981~~	~~1"~~	~~ODOR CONTROL SYSTEM LCP~~	~~PH ANALYZER, ORP ANALYZER, LOW LEV SW~~	~~4-#16TSP~~	~~CONTROL~~	
~~P1985~~	~~1"~~	~~WETWELL No.1 CHOPPER PUMP LCP~~	~~CHOPPER PUMP SWP-1~~	~~MANUFACTURER'S CABLE~~	~~POWER~~	
~~P1987~~	~~1"~~	~~WETWELL No.2 CHOPPER PUMP LCP~~	~~CHOPPER PUMP SWP-2~~	~~MANUFACTURER'S CABLE~~	~~POWER~~	
~~C1991~~	~~1"~~	~~CHEMICAL TANK FILL PANEL~~	~~SODIUM HYPOCHLORITE STORAGE TANK~~	~~2-#16TSP~~	~~CONTROL~~	
C1995	1"	CHEMICAL TANK FILL PANEL	SODIUM HYDROXIDE STORAGE TANK	2-#16TSP	CONTROL	
C2011	3/4"	DRYWELL No.1 VENTILATION ALARM LCP	VENTILATION FLOW SWITCH	4-#14, 1-#14 GND	CONTROL	
C2012	3/4"	DRYWELL No.1 VENTILATION ALARM LCP	SIGNALING DEVICES	10-#14, 1-#14 GND	CONTROL	
C2016	3/4"	DRYWELL No.2 VENTILATION ALARM LCP	VENTILATION FLOW SWITCH	4-#14, 1-#14 GND	CONTROL	
C2017	3/4"	DRYWELL No.2 VENTILATION ALARM LCP	SIGNALING DEVICES	10-#14, 1-#14 GND	CONTROL	
P2041	3/4"	PUMP INF-P1A ISOL VALVE	PUMP INF-P1A ISOL VALVE PB STATION	10-#14, 1-#14 GND	CONTROL	REMOTE PUSHBUTTON STATION
P2042	3/4"	PUMP INF-P-1B ISOL VALVE	PUMP INF-P-1B ISOL VALVE PB STATION	10-#14, 1-#14 GND	CONTROL	REMOTE PUSHBUTTON STATION
P2043	3/4"	PUMP INF-P-1C ISOL VALVE	PUMP INF-P-1C ISOL VALVE PB STATION	10-#14, 1-#14 GND	CONTROL	REMOTE PUSHBUTTON STATION
P2044	3/4"	PUMP INF-P-2A ISOL VALVE	PUMP INF-P-2A ISOL VALVE PB STATION	10-#14, 1-#14 GND	CONTROL	REMOTE PUSHBUTTON STATION
P2045	3/4"	PUMP INF-P-2B ISOL VALVE	PUMP INF-P-2B ISOL VALVE PB STATION	10-#14, 1-#14 GND	CONTROL	REMOTE PUSHBUTTON STATION
P2046	3/4"	PUMP INF-P-2C ISOL VALVE	PUMP INF-P-2C ISOL VALVE PB STATION	10-#14, 1-#14 GND	CONTROL	REMOTE PUSHBUTTON STATION
C2047	3/4"	CP-RR-PS	SCRUBBER CTRL CARBON SYSTEM PANEL	6-#14, 1-#14 GND	CONTROL	
C2048	3/4"	SCRUBBER CTRL SCRUB. SYSTEM PANEL	SCRUBBER CTRL CARBON SYSTEM PANEL	6-#14, 1-#14 GND	CONTROL	
P2049	3/4"	SCRUBBER CTRL SCRUB. SYSTEM PANEL	ODOR CTRL SYS SUMP #1 HEATER	3-#10, 1-#10GND	POWER	
P2050	3/4"	SCRUBBER CTRL SCRUB. SYSTEM PANEL	ODOR CTRL SYS SUMP #2 HEATER	3-#10, 1-#10GND	POWER	
C2051	3/4"	SCRUBBER CTRL CARBON SYSTEM PANEL	PDS	2-#14, 1-#14 GND	CONTROL	
C2052	3/4"	SCRUBBER CTRL CARBON SYSTEM PANEL	PSH (VAC)	2-#14, 1-#14 GND	CONTROL	
C2053	3/4"	SCRUBBER CTRL CARBON SYSTEM PANEL	PSH	2-#14, 1-#14 GND	CONTROL	
C2054	3/4"	SCRUBBER CTRL CARBON SYSTEM PANEL	PDS	2-#14, 1-#14 GND	CONTROL	
C2055	2"	CP-RR-PS	SCRUBBER CTRL SCRUB. SYSTEM PANEL	6-#16TSP	CONTROL	
P2056	3/4"	PANEL HC	TRANSFORMER TC	3#6, 1#6GND	POWER	
P2057	2"	TRANSFORMER TC	PANEL LC	4-#2, 1-#6GND.	POWER	
C2058	3/4"	CP-RR-PS	LIT-151	2-#16TSP	CONTROL	
C2059	3/4"	CP-RR-PS	LIT-152	2-#16TSP	CONTROL	
C2060	3/4"	CP-RR-PS	PE/LIT-153	MANUFACTURER'S CABLE	CONTROL	
C2061	3/4"	CP-RR-PS	PE/LIT-154	MANUFACTURER'S CABLE	CONTROL	
P2062	3/4"	PANEL LC	LIT-151	2-#14, 1-#14 GND	CONTROL	
P2063	3/4"	PANEL LC	LIT-152	2-#14, 1-#14 GND	CONTROL	
C2064	3/4"	CP-RR-PS	EYWASH SCRUBBER ODOR CTRL	2-#14, 1-#14 GND	CONTROL	
C2065	3/4"	CP-RR-PS	EYWASH CHEM TANK CTRL	2-#14, 1-#14 GND	CONTROL	
C2066	2"	SCRUBBER CTRL SCRUB. SYSTEM PANEL	SCRUBBER CTRL SCRUB. TJB	10-#16TSP	CONTROL	
P3000	5"	GENERATOR G1	PARALLELING SWITCHGEAR	4-500KCMIL, #3/0 GND	POWER	5/8 KV CABLE, 600V GND
P3001	5"	GENERATOR G2	PARALLELING SWITCHGEAR	4-500KCMIL, #3/0 GND	POWER	5/8 KV CABLE, 600V GND
P3010	5"	UTILITY TRANSFORMER TX-A	PARALLELING SWITCHGEAR	4-500KCMIL, #3/0 GND	POWER	5/8 KV CABLE, 600V GND
P3011	5"	UTILITY TRANSFORMER TX-A	PARALLELING SWITCHGEAR	4-500KCMIL, #3/0 GND	POWER	5/8 KV CABLE, 600V GND
P3012	5"	UTILITY TRANSFORMER TX-A	PARALLELING SWITCHGEAR	SPARE	POWER	5/8 KV CABLE, 600V GND
P3015	5"	UTILITY TRANSFORMER TX-B	PARALLELING SWITCHGEAR	4-500KCMIL, #3/0 GND	POWER	5/8 KV CABLE, 600V GND
P3016	5"	UTILITY TRANSFORMER TX-B	PARALLELING SWITCHGEAR	4-500KCMIL, #3/0 GND	POWER	5/8 KV CABLE, 600V GND
P3017	5"	UTILITY TRANSFORMER TX-B	PARALLELING SWITCHGEAR	SPARE	POWER	5/8 KV CABLE, 600V GND
P3020	5"	PARALLELING SWITCHGEAR	EXISTING MAIN SWGR MSG-1	4-500KCMIL, #3/0 GND	POWER	5/8 KV CABLE, 600V GND
P3021	5"	PARALLELING SWITCHGEAR	EXISTING MAIN SWGR MSG-1	4-500KCMIL, #3/0 GND	POWER	5/8 KV CABLE, 600V GND
P3022	5"	PARALLELING SWITCHGEAR	EXISTING MAIN SWGR MSG-1	SPARE	POWER	5/8 KV CABLE, 600V GND
P3025	5"	PARALLELING SWITCHGEAR	EXISTING MAIN SWGR MSG-2	4-500KCMIL, #3/0 GND	POWER	5/8 KV CABLE, 600V GND
P3026	5"	PARALLELING SWITCHGEAR	EXISTING MAIN SWGR MSG-2	4-500KCMIL, #3/0 GND	POWER	5/8 KV CABLE, 600V GND
P3027	5"	PARALLELING SWITCHGEAR	EXISTING MAIN SWGR MSG-2	SPARE	POWER	5/8 KV CABLE, 600V GND

REFER TO CONTRACT DRAWING NUMBER E16

SHEET 1 OF 1

H & S JOB NUMBER 30039

CONTRACT NUMBER

Electrical Conduit & Wire Schedule - Sheet 2

RIVERSIDE ROAD PUMP STATION UPGRADES

575 RIVERSIDE ROAD, ROSWELL GA. 30075

DATE 01-07-08

BY H & S

ADDENDUM NO. 4

ATTACHMENT NO. ESK-10