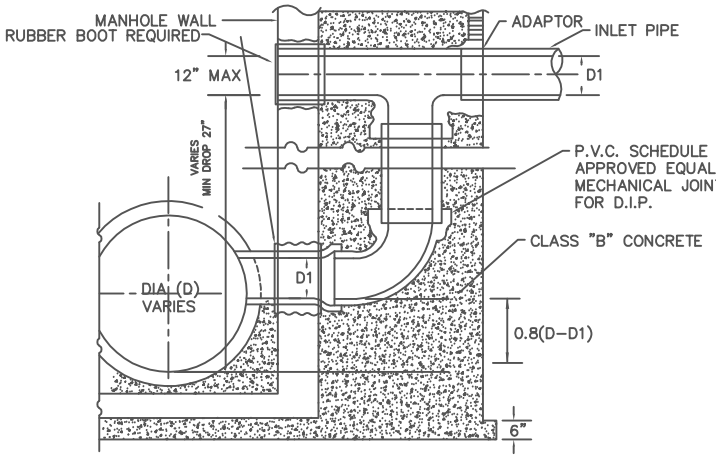

SECTION E-E
N.T.S.

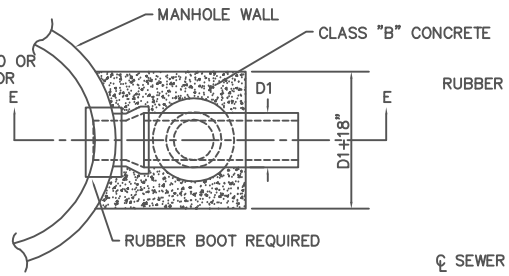

PART PLAN

TYPICAL VERTICAL DROP INLET AT MANHOLE
(OUTSIDE DROP)

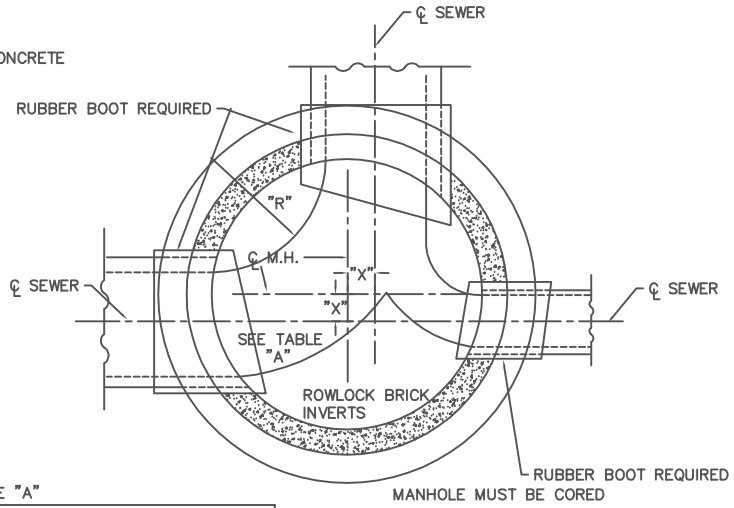

SECTIONAL PLAN
N.T.S.

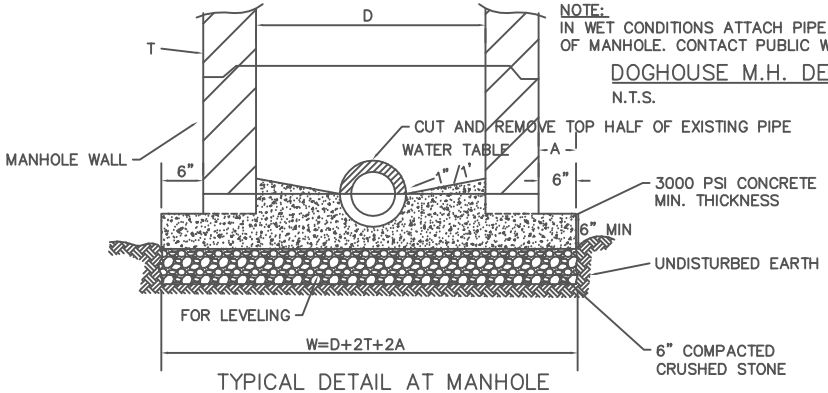

NOTE:
IN WET CONDITIONS ATTACH PIPE INSIDE OF MANHOLE. CONTACT PUBLIC WORKS.

DOGHOUSE M.H. DETAIL
N.T.S.

TYPICAL DETAIL AT MANHOLE
CONSTRUCTED OVER EXISTING PIPE
N.T.S.

TABLE "A"

STANDARD PRECAST MANHOLES				
SCHEDULE OF GOVERNING DIMENSIONS				
PIPE SIZE	ANGLE	M.H. DIAMETER	"R"	"X"
8" thru 12"	0° to 90°	4	1'-0"	0"
15"	0° to 60°	4'	1'-3"	0"
15"	60° to 90°	4'	1'-3"	6"
18"	0° to 60°	4'	1'-6"	0"
18"	60° to 90°	4'	1'-4"	8"
21"	0° to 60°	4'	1'-9	0"
21"	60° to 90°	5'	1'-9"	9"
24"	0° to 60°	4'	2'-0"	0"
24"	60° to 90°	5'	1'-6"	9"
27"	0° to 60°	5'	2'-3"	0"
27"	60° to 90°	6'	2'-0"	1'-0"
30"	0° to 60°	5'	2'-6"	0"
30"	60° to 90°	6'	1'-9"	8"
36"	0° to 90°	PRE-BED PIPE, M.H. BASE & ELBOW UNIT		

FULTON COUNTY STANDARD DETAIL 115
STANDARD SEWER MANHOLES
PRECAST CONCRETE

DATE	REVISIONS	DATE	REVISIONS
8/08	NRR		

DGS/DRN/CHKD: REB
APPROVED: REW
DATE: 12-2-05

FULTON COUNTY

FULTON COUNTY PUBLIC WORKS
141 PRYOR ST. ATLANTA, GA. 30303
404-612-7400 FAX: 404-224-0498

DRAWING NO.
115