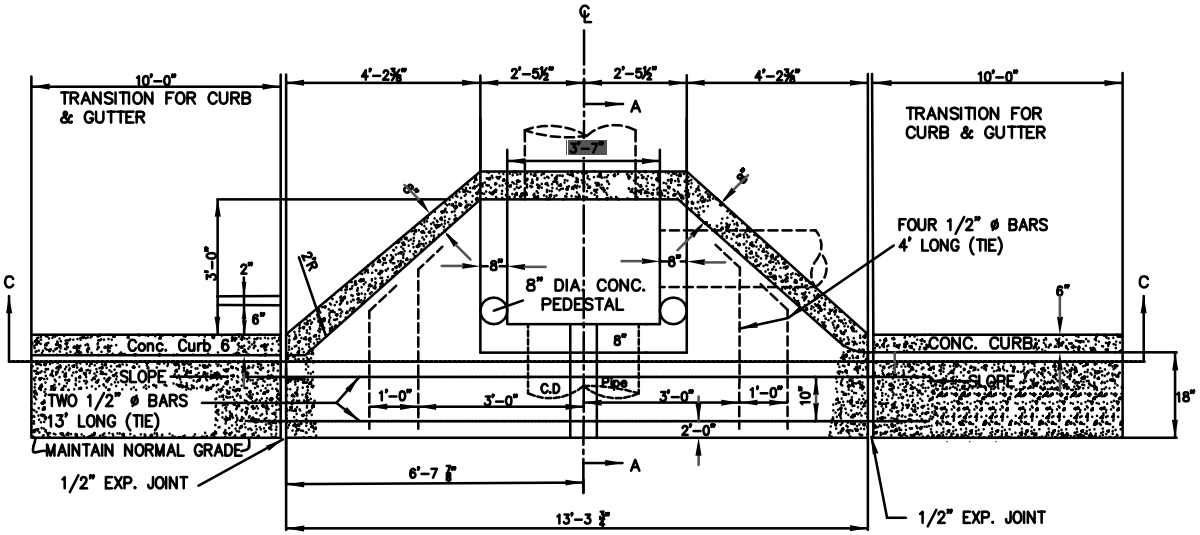

TOP OMITTED FOR CLARITY

8" DIA. CONC. PEDESTAL TO BE POURED MONOLITHIC WITH THROAT SLAB

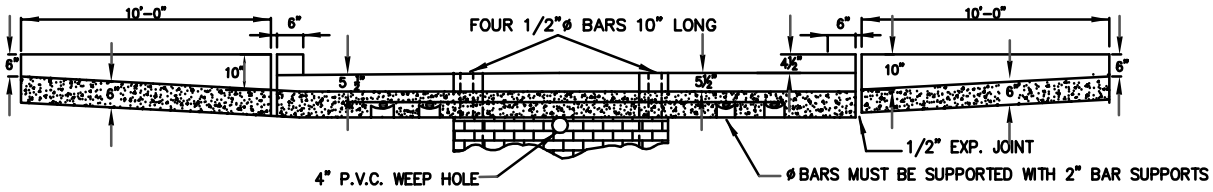

SECTION C–C
(CAST IN PLACE)

NOTE:
OPENING AT CATCH BASIN SHALL BE BETWEEN 5 1/2" AND 7"

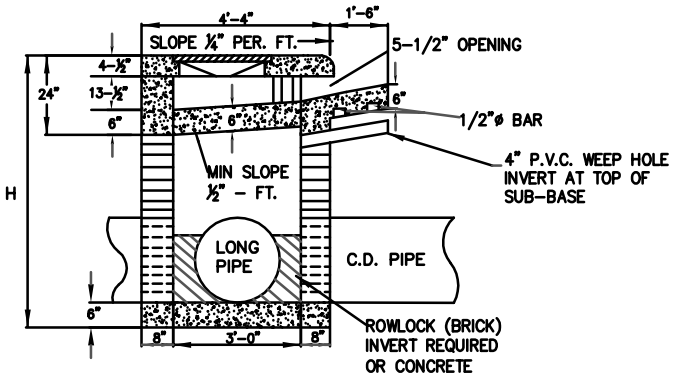

SECTION A–A

NOTE: ALL POURED–IN–PLACE CONC. TO BE CLASS "A" 3000 P.S.I.

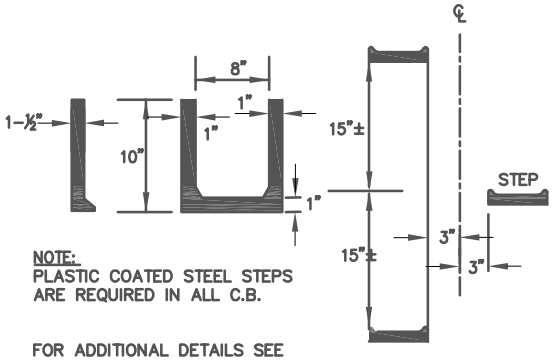

NOTE:
PLASTIC COATED STEEL STEPS ARE REQUIRED IN ALL C.B.

FOR ADDITIONAL DETAILS SEE STANDARD #104

ARRANGEMENT OF STEPS

NOTE:
1. FOR ALL CATCH BASINS, 1/2" EXPANSION JOINT MATERIAL SHALL BE PLACED AROUND THE CATCH BASIN WHERE SIDEWALK OR MEDIAN PAVEMENT IS PLACED ADJACENT TO THE CATCH BASIN
2. CONCRETE STRENGTH TEST REQUIRED FOR ALL POURED IN PLACE CONCRETE.

4' FOOT BAR DETAIL

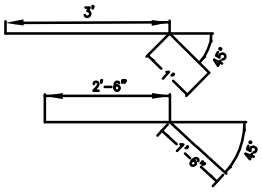

INSIDE DIAMETER OF PIPE IN INCHES	MINIMUM H
18	4'-10"
24	5'-6"
30	6'-2"

2 G.D.O.T. STANDARD #1034D IS ALLOWABLE ALTERNATIVE

FULTON COUNTY STANDARD DETAIL 505
CATCH BASIN – DOUBLEWING
ONLINE

DATE	REVISIONS	DATE	REVISIONS
8/08	RC		

DGS/DRN/CHKD: CMS
APPROVED: REW
DATE: 12-02-05

FULTON COUNTY

FULTON COUNTY PUBLIC WORKS
141 PRYOR ST. ATLANTA, GA. 30303
404-612-7400 FAX: 404-730-6325

DRAWING NO. 505