NOTES:
1. TOP OF SERVICE BOX SHALL BE FLUSH WITH FINAL SURFACE IN SIDEWALKS AND PAVED AREAS.
2. HEAVY DUTY CLEANOUT BOX AND LID ARE REQUIRED IN PAVED AREAS.

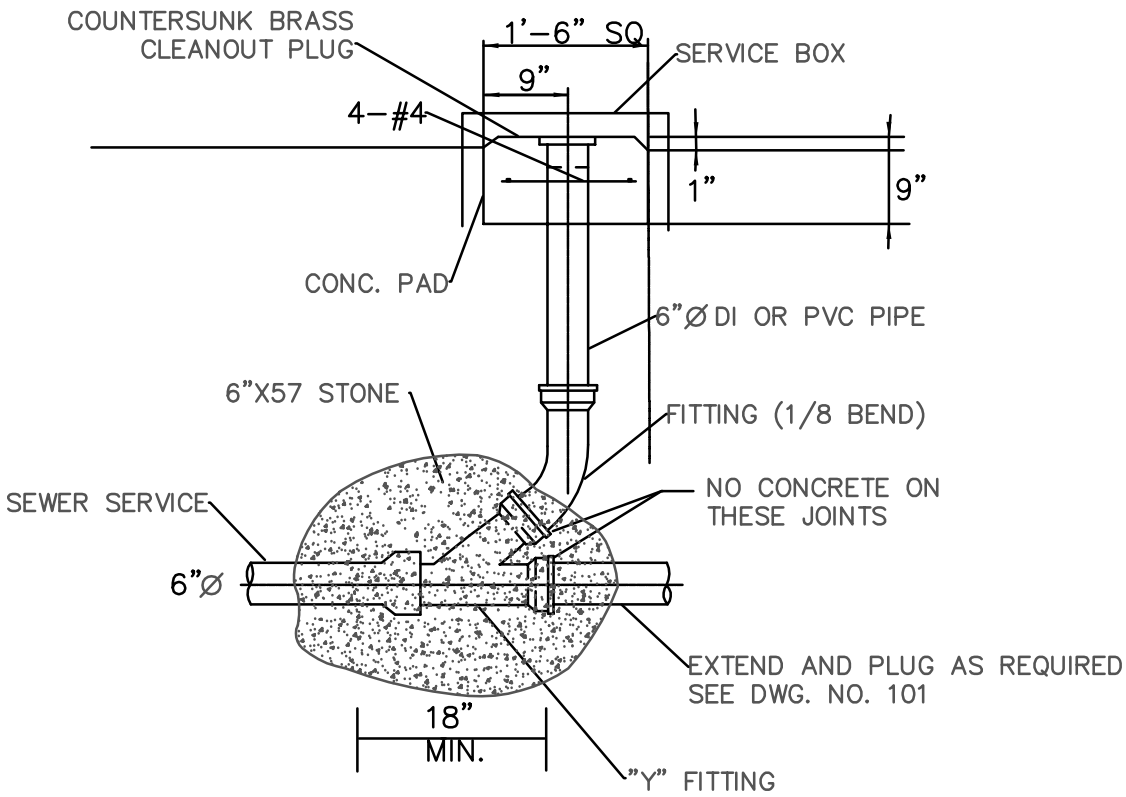

USF 7635 SEWER VALVE BOX AND COVER
N.T.S.

STANDARDS AND SPECIFICATIONS:
1. COVER IS MARKED "S".

TO ORDER:
1. SPECIFY USF NUMBER AND COVER TYPE.

COVER TYPE	LOAD RATING	COVER WEIGHT	TOTAL WEIGHT
FJ	HEAVY DUTY	55	230

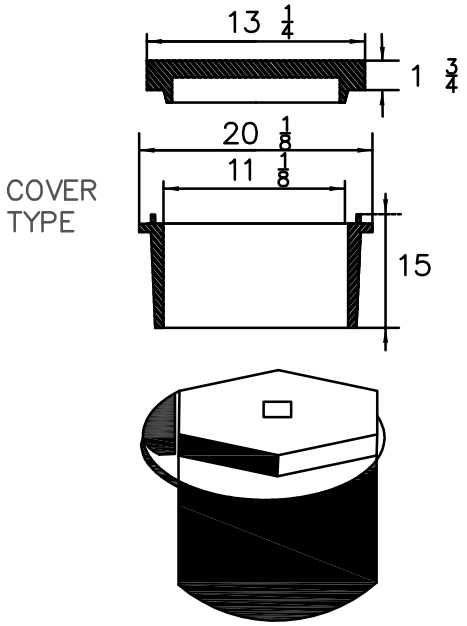

NO. 53 STANDARD

FULTON COUNTY STANDARD DETAIL 709 SERVICE CONNECTION CLEANOUT	DATE	REVISIONS	DATE	REVISIONS	DGS/DRN/CHKD: CMS APPROVED: REW DATE: 12-2-05	FULTON COUNTY	FULTON COUNTY PUBLIC WORKS 141 PRYOR ST. ATLANTA, GA. 30303 404-612-7400 FAX: 404-224-0498	DRAWING NO. 709
	8/08	NRR						