Fulton County is an Equal Opportunity Employer encouraging diversity. If you need reasonable modifications due to a disability, including communications in an alternate format, please contact (404) 612-7400 or PW.CustomerService@fultoncountyga.gov. For TDD/TTY or Georgia Relay Service access, dial 711.

NOTES:

1. DETAILS ARE TYPICAL.
2. REPLACE SIDEWALKS, CURB AND GUTTER AND CURBING TO MATCH EXISTING MATERIALS AS DIRECTED.

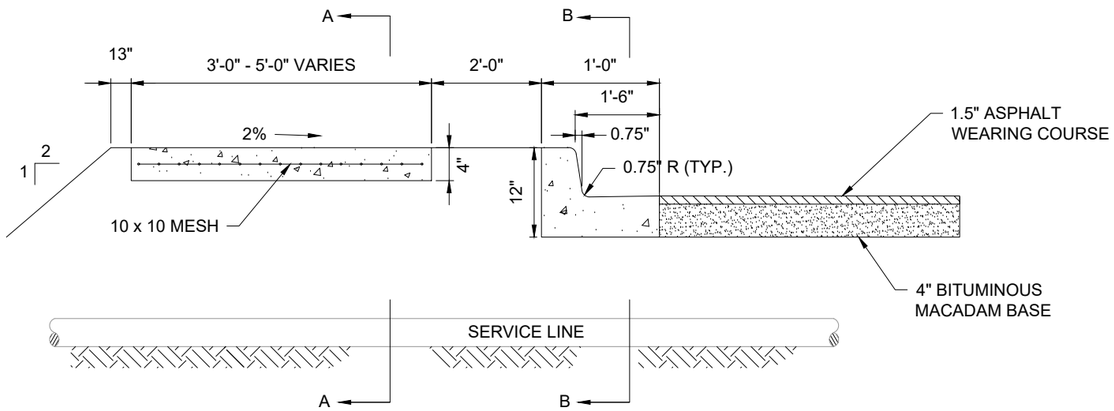

TYPICAL CURB-GUTTER DETAIL
NTS

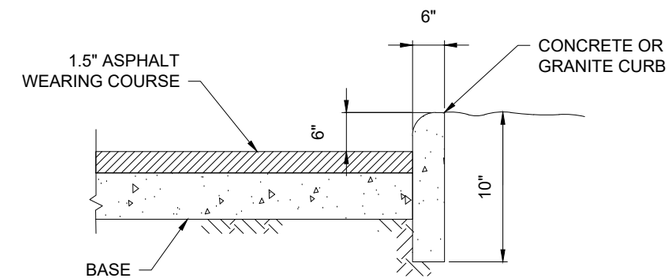

TYPICAL CURB DETAIL
NTS

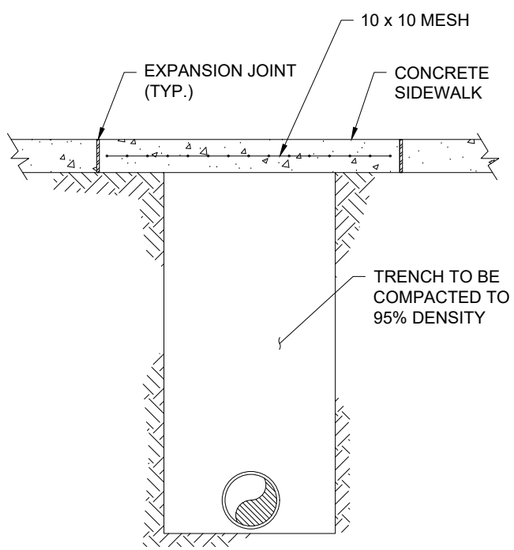

SECTION A - A

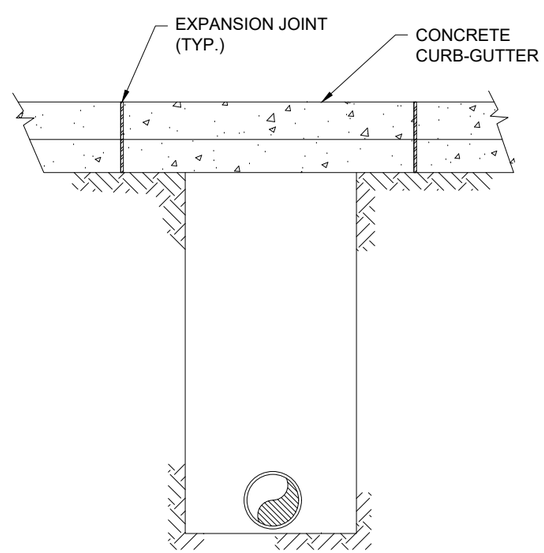

SECTION B - B

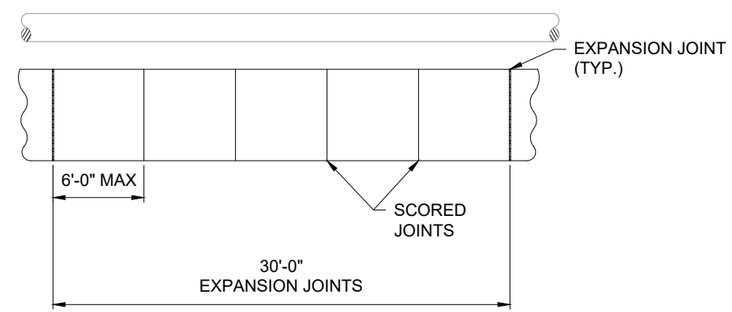

TYPICAL SIDEWALK JOINT PLACEMENT DETAIL
NTS

FULTON COUNTY STANDARD DETAIL 134 SIDEWALK, CURB AND GUTTER REPAIRS		DATE	REVISIONS	DATE	REVISIONS	DGS/DRN/CHKD: MB/EB/ML APPROVED: TM DATE: 02-18-2026	FULTON COUNTY PUBLIC WORKS 141 PRYOR ST. ATLANTA, GA. 30303 404-612-7400 FAX: 404-224-0498	DRAWING NO. 134

134 – Sidewalk– Curb– Gutter Repairs.dwg March 17, 2026 – 1:21pm