Fulton County is an Equal Opportunity Employer encouraging diversity. If you need reasonable modifications due to a disability, including communications in an alternate format, please contact (404) 612-7400 or PW.CustomerService@fultoncountyga.gov. For TDD/TTY or Georgia Relay Service access, dial 711.

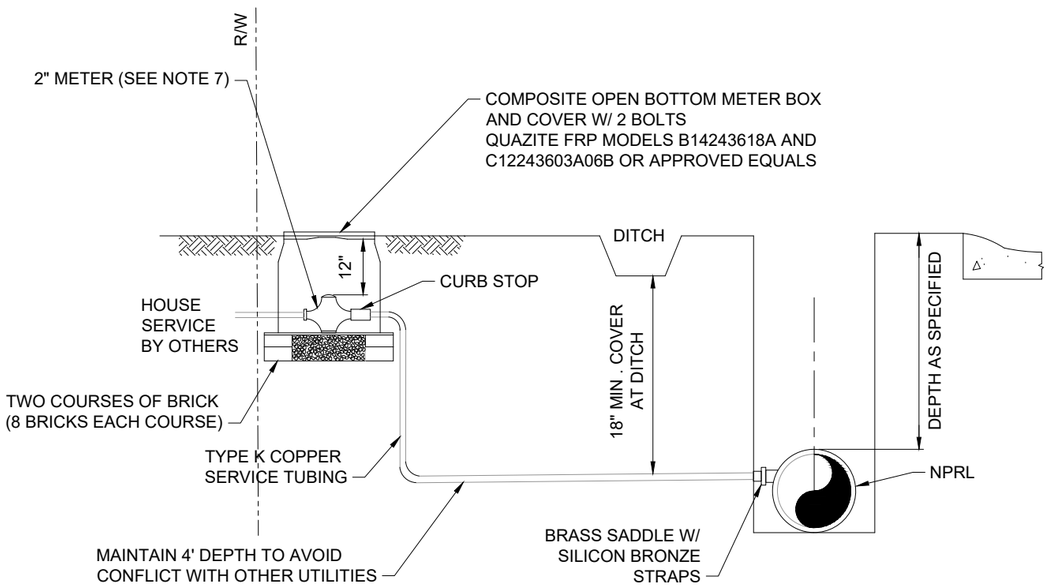

METER INSTALLATION ELEVATION DETAIL
N.T.S.

NOTES:

1. SERVICE LINE SHALL BE 2" FROM THE MAIN TO THE METER.
2. USE ALL COMPRESSION GRIP JOINTS.
3. INSTALLATION SHALL ALLOW ADEQUATE ROOM TO REMOVE AND/OR REPAIR METER.
4. METER BOX SHALL BE APPROXIMATELY 24" x 36" x 18" DEEP.
5. TYPE K COPPER SERVICE LINE MUST BE CONTINUOUS FROM METER TO MAIN.
6. SERVICE SHALL HAVE 18" MIN. COVER BETWEEN MAIN AND METER.
7. METER PLACEMENT SHALL BE INSIDE R/W FOR NON-DOT ROADS, OUTSIDE R/W FOR DOT ROADS OR AS REQUIRED BY LOCAL AUTHORITIES W/ JURISDICTION.
8. ALL SEWER LINES, WATER LINES, REUSE LINES, AND FORCE MAIN LINES SHALL HAVE 3M™ EMS WARNING TAPE 7900 SERIES BURIED NO MORE THAN 4-FEET BELOW GROUND LEVEL INSTALLED ABOUT THE PIPE OR MINIMUM OF 1-FOOT ABOVE TOP OF PIPE BUT NO MORE THAN 2-FEET. THIS SHALL INCLUDE SEWER LATERALS AND WATER SERVICE LINES. TAPE SHALL BE INSTALLED ABOVE CONDUIT FOR LINES PLACED IN CONDUITS. ALL SEWER LINES, WATER LINES, REUSE LINES, AND FORCE MAIN LINES SHALL HAVE 3M™ EXTENDED RANGE BALL MARKERS 1400 SERIES BURIED NO MORE THAN 4-FEET DEEP OVER ALL LINES AT A MINIMUM OF 1-FOOT ABOVE TOP OF PIPE BUT NO MORE THAN 2-FEET. THESE BALLS SHALL BE INSTALLED AT ALL BENDS 22 ½ DEGREES OR LARGER, REDUCERS, BEGINNING AND ENDING OF CASINGS, END OF LINES, AND AT ALL TEES OR TAPS. STANDARD MARKING TAPE SHALL BE INSTALLED OVER THE TOP OF ALL LINES BURIED MORE THAN 6-FEET DEEP SHALL BE 7900 SERIES WARNING TAPE BURIED 1-FOOT ABOVE TOP OF PIPE IN ADDITION TO THE TAPE AND BALLS INSTALLED NEAR THE SURFACE.
9. MARKER BALLS SHALL BE PROGRAMMED WITH THE FOLLOWING INFORMATION BY THE CONTRACTOR: LINE 1: UTILITY CONTRACTOR NAME. LINE 2: PIPE DEPTH. LINE 3: PIPE SIZE. LINE 4: PIPE MATERIAL AND CLASS. LINE 5: FULTON COUNTY. LINE 6: OPTIONAL.

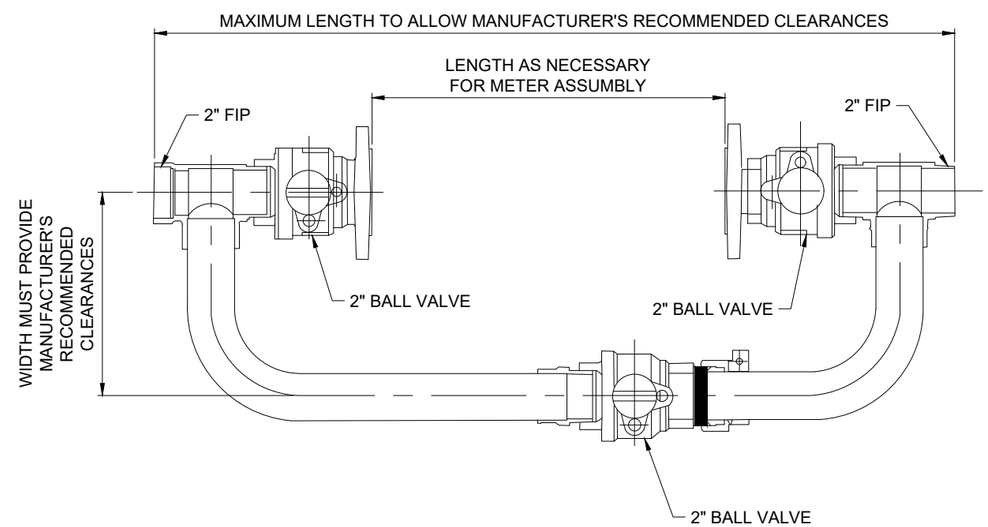

TYPICAL BYPASS DETAIL
N.T.S.

		DATE	REVISIONS	DATE	REVISIONS				
FULTON COUNTY STANDARD DETAIL 604 2" RECLAIMED WATER METER INSTALLATION						DGS/DRN/CHKD: MB/EB/ML APPROVED: TM DATE: 02-18-2026	FULTON COUNTY	FULTON COUNTY PUBLIC WORKS 141 PRYOR ST. ATLANTA, GA. 30303 404-612-7400 FAX: 404-224-0498	DRAWING NO. 604

604 – 2" Reclaimed Water Meter Installation.dwg March 17, 2026 – 3:27pm