Fulton County is an Equal Opportunity Employer encouraging diversity. If you need reasonable modifications due to a disability, including communications in an alternate format, please contact (404) 612-7400 or PW.CustomerService@fultoncountyga.gov. For TDD/TTY or Georgia Relay Service access, dial 711.

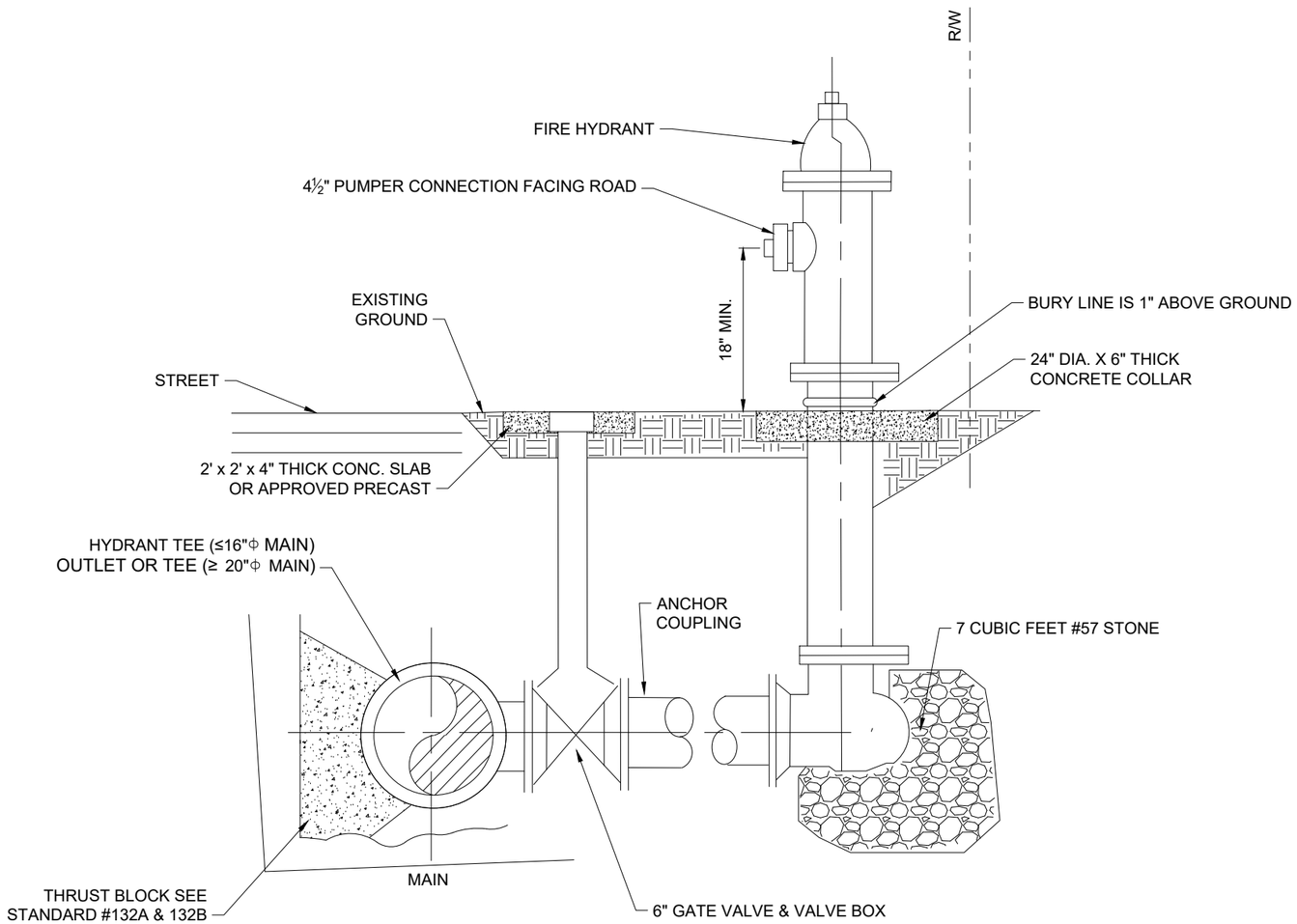

HYDRANT LOCATION DETAIL
NTS

NOTES:

1. FIRE HYDRANTS CONNECTED TO 12-INCH AND LARGER WATER MAINS SHALL BE FURNISHED WITH LOCKING HYDRANT SECURITY CAPS. CAPS SHALL BE PROVIDED ON EACH HOSE AND PUMPER NOZZLE AND INCORPORATE A "FREE SPINNING" DESIGN THAT PROVIDES SECURITY AGAINST UNAUTHORIZED INTRUSION INTO THE FIRE HYDRANT, OR WATER THEFT FROM THE HYDRANT. WHEN SECURED, THE CAP SHALL SPIN FREELY UNTIL UNLOCKED AND REMOVED THROUGH THE USE OF A WRENCH. WHEN UNLOCKED, THE CAP SHALL OPEN IN A MANNER SIMILAR TO A STANDARD CAP. CAPS SHALL BE SIMILAR IN APPEARANCE TO STANDARD CAPS AND SHALL USE A CENTER PLACED LOCKING MECHANISM. THE LOCKING MECHANISM SHALL BE HARDENED STAINLESS STEEL AND SHALL BE PROTECTED FROM THE ELEMENTS. CAPS USING MAGNETIC LOCKS ARE UNACCEPTABLE. WRENCHES SHALL SHIP DIRECT TO OWNER.
2. MINIMUM OF 18 INCHES FROM GROUND TO CENTER OF CONNECTION. MAXIMUM OF 21 INCHES.
3. ALL VALVES MUST BE RATED AT WORKING PRESSURE OF 200 PSI AND TESTED AT A PRESSURE OF 250 PSI. ALL FIRE HYDRANTS MUST BE ACCOMPANIED BY A MANUFACTURER'S CERTIFICATE THAT STATES EACH HYDRANT HAS BEEN TESTED ACCORDING TO THE LATEST REVISION OF AWWA SPECIFICATION C502.
4. CONCRETE STRENGTH TEST REQUIRED FOR ALL POURED IN-PLACE CONCRETE.
5. PAINT BONNET SILVER FOR HYDRANTS SET ON 10-INCH AND SMALLER WATER LINES; YELLOW FOR HYDRANTS SET ON 12-INCH WATER LINES; AND GREEN FOR HYDRANTS SET ON 16-INCH OR GREATER WATER LINES. REPAINT HYDRANT AT END OF MAINTENANCE.
6. FIRE HYDRANT TO HAVE A 5-1/4" CORE.
7. FOR ASSEMBLY DETAILS SEE STANDARD DWG. 810.
8. "SMART" HYDRANTS SHALL BE M&H 5-1/4" iHYDRANT™ - M&H 129S FOR APPROVED EQUIVALENT.

FULTON COUNTY STANDARD DETAIL 809

HYDRANT LOCATION DETAIL FOR UNCURBED RESIDENTIAL STREETS

DATE	REVISIONS	DATE	REVISIONS

DGS/DRN/CHKD: MB/EB/ML
APPROVED: TM
DATE: 02-18-2026

FULTON COUNTY

FULTON COUNTY PUBLIC WORKS
141 PRYOR ST. ATLANTA, GA. 30303
404-612-7400 FAX: 404-224-0498

DRAWING NO.
809

809 – Hydrant Location for Uncurbed Residential Streets.dwg March 17, 2026 – 4:14pm