Fulton County is an Equal Opportunity Employer encouraging diversity. If you need reasonable modifications due to a disability, including communications in an alternate format, please contact (404) 612-7400 or PW.CustomerService@fultoncountyga.gov. For TDD/TTY or Georgia Relay Service access, dial 711.

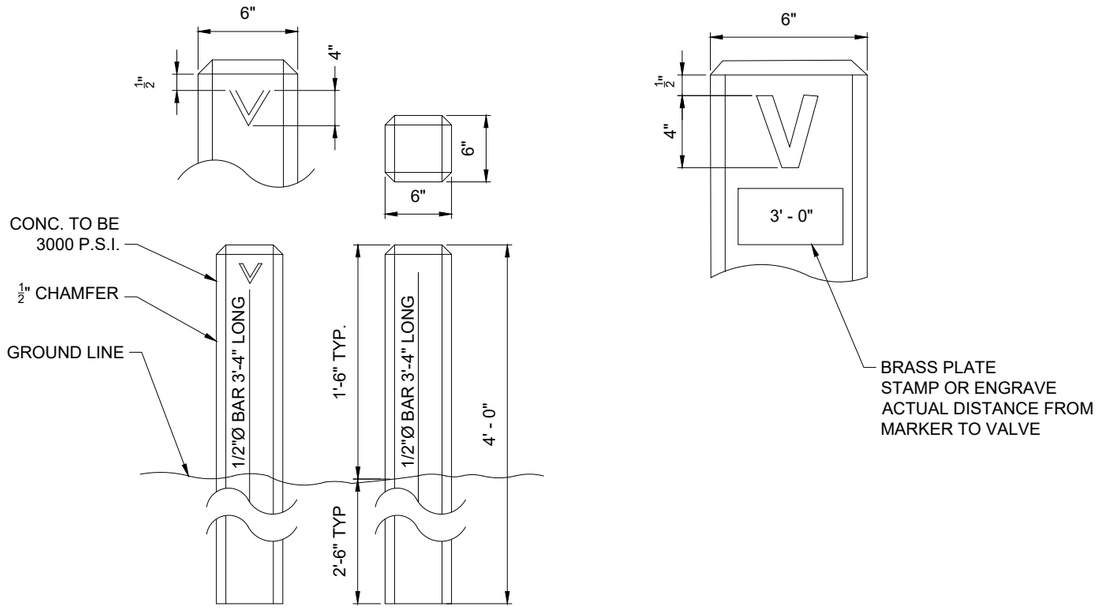

WATER VALVE MARKER DETAILS
N.T.S.

		DATE	REVISIONS	DATE	REVISIONS				
FULTON COUNTY STANDARD DETAIL 816 WATER VALVE MARKER						DGS/DRN/CHKD: MB/EB/ML APPROVED: TM DATE: 02-18-2026	FULTON COUNTY	FULTON COUNTY PUBLIC WORKS 141 PRYOR ST. ATLANTA, GA. 30303 404-612-7400 FAX: 404-224-0498	DRAWING NO. 816

816 – Water Valve Marker.dwg March 17, 2026 – 4:14pm