Fulton County is an Equal Opportunity Employer encouraging diversity. If you need reasonable modifications due to a disability, including communications in an alternate format, please contact (404) 612-7400 or PW.CustomerService@fultoncountyga.gov. For TDD/TTY or Georgia Relay Service access, dial 711.

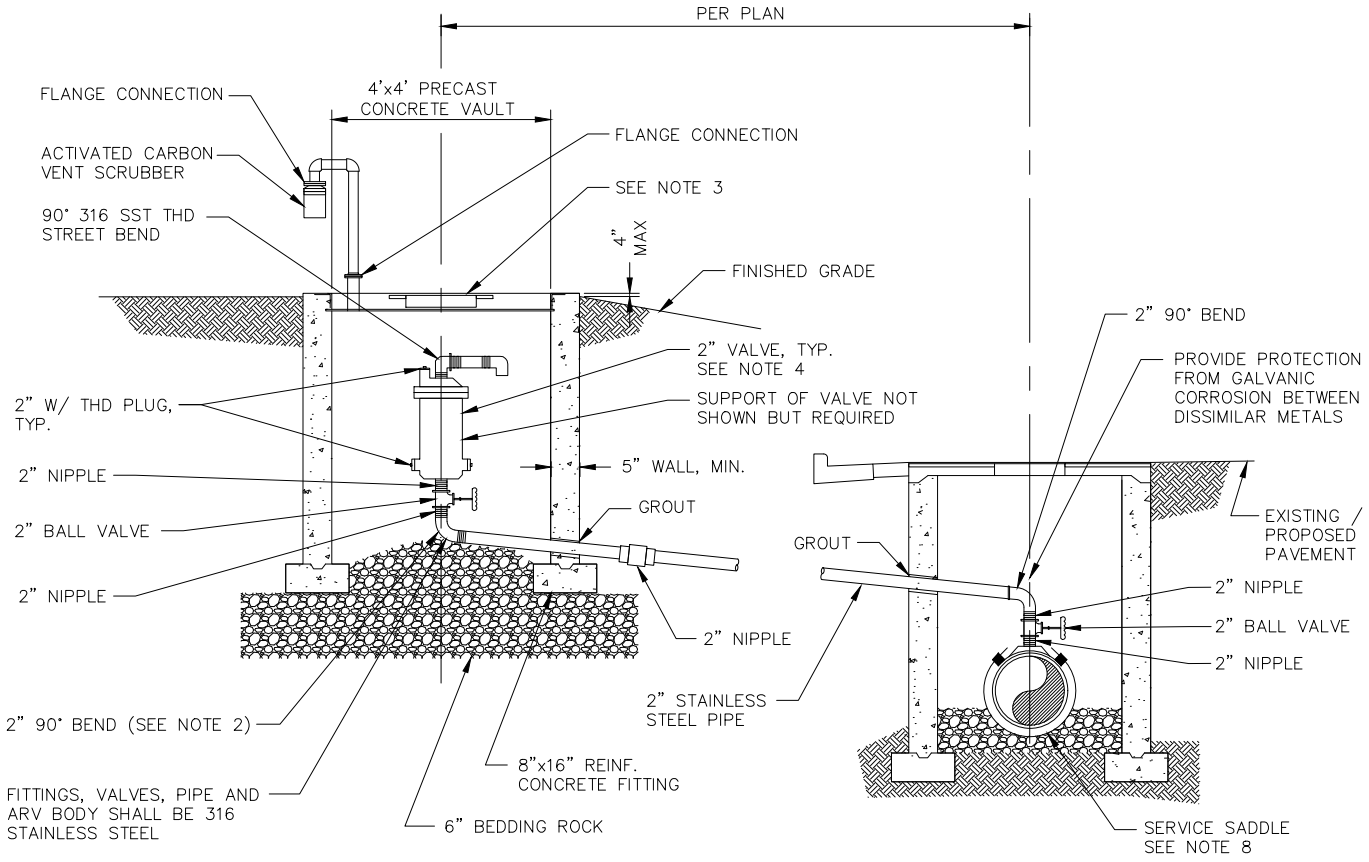

NOTES:

1. ABOVE DETAIL IS BASED ON A 2" WASTEWATER AIR/VACUUM RELEASE VALVE. VALVE SIZES SHALL BE DETERMINED BY THE DEVELOPER'S ENGINEER AND APPROVED BY FULTON COUNTY PUBLIC WORKS PRIOR TO INSTALLATION. SPECIFIC COMPONENTS WILL BE DIFFERENT BASED ON DIFFERENT SIZES.
2. THE MINIMUM DIMENSION FROM INVERT TO FINISHED GRADE SHALL BE 4.0 FEET.
3. FRAME AND COVER SHALL BE EQUIVALENT TO U.S. FOUNDARY USF 170-E-ORS.
4. VALVE SHALL BE VENT TECH OR VENT-O-MAT OR EQUAL. SIZE SHALL BE BASED ON FORCE MAIN SIZE.
5. THE WASTEWATER AIR/VACUUM RELEASE VALVE VAULT IS NOT DETAILED FOR VEHICULAR TRAFFIC LOADS AND IS NOT INTENDED FOR PLACEMENT WITHIN THE TRAVELED WAY.
6. VAULT VENT SHALL BE PROVIDED WITH ACTIVATED CARBON ODOR CONTROL CANISTER.
7. AIR-VACUUM VALVE SHALL BE PROVIDED WITH SUPPORTS.
8. PROVIDE SERVICE SADDLE WITH NTP THREADED OUTLETS:
   - DESIGNED FOR USE WITH DIP, PVC AND HDPE PIPES WITH A WORKING PRESSURE OF 300 PSI.
   - BODIES: DUCTILE IRON PER ASTM A536.
   - STRAPS: TYPE 304 STAINLESS STEEL. DOUBLE STRAP 1.50" WIDE.
   - NUTS: TYPE 304 STAINLESS STEEL FLUOROPOLYMER COATED.
   - WASHERS: TYPE 304 STAINLESS STEEL
   - STUDS: TYPE 304 STAINLESS STEEL
   - GASKET: NITRILE (BUNA N) NSF 61® COMPOUNDED TO RESIST OIL, ACIDS, ALKALIES, MOST (ALIPHATIC) HYDROCARBON FLUIDS, WATER AND OTHER CHEMICALS.
   - FINISH: FLEXI-COAT® FUSION-BONDED EPOXY FINISH PER AWWA C213.
   - AS MANUFACTURED BY SMITH BLAIR OR FCPW APPROVED EQUAL.

FULTON COUNTY	FULTON COUNTY STANDARD DETAILS	DATE: 02-18-2026
	PUMP STATION COMBINATION AIR-VACUUM VALVE INSTALLATION DETAIL NOT TO SCALE	FULTON COUNTY PUBLIC WORKS 141 PRYOR ST. ATLANTA, GA. 30303 404-612-7400 FAX: 404-224-0498
		DETAIL NO. P-018