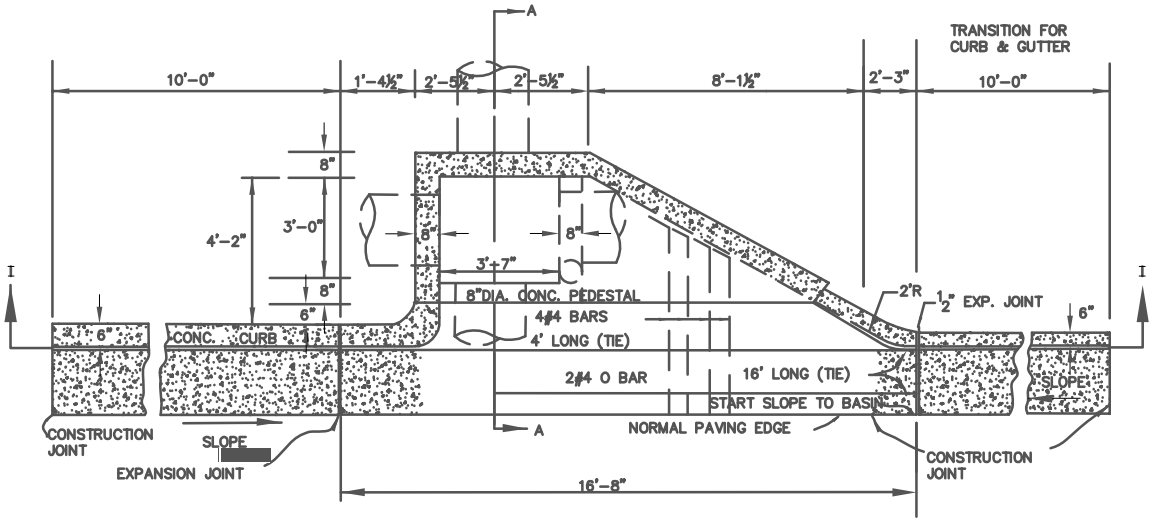

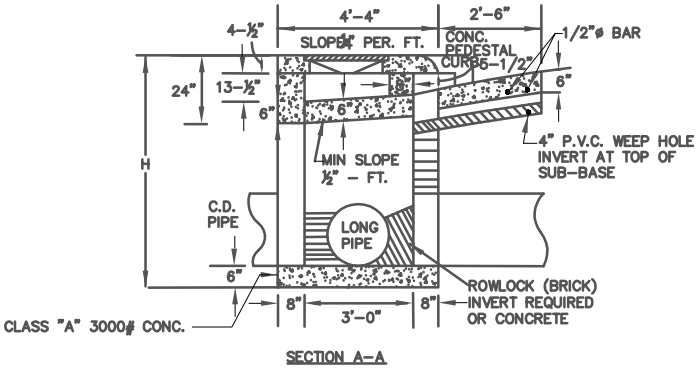

SECTION A-A

NOTE:
ALL POURED-IN-PLACE CONC. TO BE CLASS "A" 3000 P.S.I.

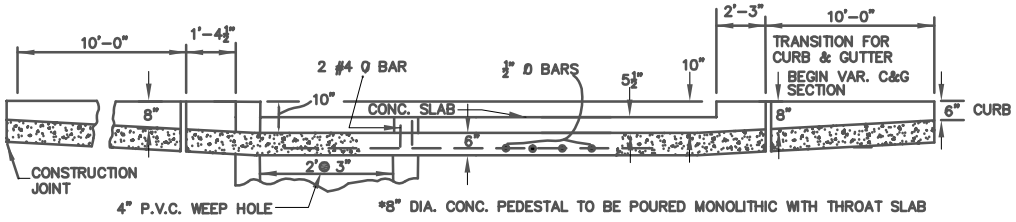

SECTION I-I
(CAST IN PLACE)

NOTE REQUIRED:
CONCRETE STRENGTH TEST REQUIRED FOR ALL POURED IN PLACE CONCRETE.

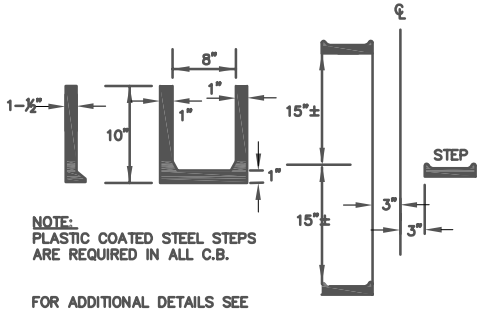

NOTE:
PLASTIC COATED STEEL STEPS ARE REQUIRED IN ALL C.B.

FOR ADDITIONAL DETAILS SEE STANDARD # 104

ARRANGEMENT OF STEPS

NOTE:
FOR ALL CATCH BASINS, 1/2" EXPANSION JOINT MATERIAL SHALL BE PLACED AROUND THE CATCH BASIN WHERE SIDEWALK OR MEDIAN PAVEMENT IS PLACED ADJACENT TO THE CATCH BASIN

IN ANY SUBDIVISION THE OPTION IS TO USE EITHER ALL ONLINE CATCH BASINS OR ALL ONE FOOT OFFSET CATCH BASINS.

INSIDE DIAMETER OF PIPE IN INCHES	MINIMUM H
18	4'-10"
24	5'-6"
30	6'-2"
36	6'-10"
42	7'-4"
48	8'-0"
54	8'-6"
60	9'-2"

FULTON COUNTY STANDARD DETAIL 501
CATCH BASIN
ONE FOOT OFFSET, SINGLEWING
(FACE OF CURB)

DATE	REVISIONS	DATE	REVISIONS
8/08	RC		

DGS/DRN/CHKD: CMS
APPROVED: REW
DATE: 12-02-05

FULTON COUNTY

FULTON COUNTY PUBLIC WORKS
141 PRYOR ST. ATLANTA, GA. 30303
404-612-7400 FAX: 404-730-6325

DRAWING NO. 501